AUTHENTICATED
U.S. GOVERNMENT
INFORMATION
GPO

Federal Register

7–10–09 Friday
Vol. 74 No. 131 July 10, 2009

Pages 33139–33318

The **FEDERAL REGISTER** (ISSN 0097–6326) is published daily, Monday through Friday, except official holidays, by the Office of the Federal Register, National Archives and Records Administration, Washington, DC 20408, under the Federal Register Act (44 U.S.C. Ch. 15) and the regulations of the Administrative Committee of the Federal Register (1 CFR Ch. I). The Superintendent of Documents, U.S. Government Printing Office, Washington, DC 20402 is the exclusive distributor of the official edition. Periodicals postage is paid at Washington, DC.

The **FEDERAL REGISTER** provides a uniform system for making available to the public regulations and legal notices issued by Federal agencies. These include Presidential proclamations and Executive Orders, Federal agency documents having general applicability and legal effect, documents required to be published by act of Congress, and other Federal agency documents of public interest.

Documents are on file for public inspection in the Office of the Federal Register the day before they are published, unless the issuing agency requests earlier filing. For a list of documents currently on file for public inspection, see *www.federalregister.gov.*

The seal of the National Archives and Records Administration authenticates the Federal Register as the official serial publication established under the Federal Register Act. Under 44 U.S.C. 1507, the contents of the **Federal Register** shall be judicially noticed.

The **Federal Register** is published in paper and on 24x microfiche. It is also available online at no charge as one of the databases on GPO Access, a service of the U.S. Government Printing Office.

The online edition of the **Federal Register** *www.gpoaccess.gov/nara,* available through GPO Access, is issued under the authority of the Administrative Committee of the Federal Register as the official legal equivalent of the paper and microfiche editions (44 U.S.C. 4101 and 1 CFR 5.10). It is updated by 6 a.m. each day the **Federal Register** is published and includes both text and graphics from Volume 59, Number 1 (January 2, 1994) forward.

For more information about GPO Access, contact the GPO Access User Support Team, call toll free 1-888-293-6498; DC area 202-512-1530; fax at 202-512-1262; or via e-mail at *gpoaccess@gpo.gov.* The Support Team is available between 7:00 a.m. and 9:00 p.m. Eastern Time, Monday–Friday, except official holidays.

The annual subscription price for the **Federal Register** paper edition is $749 plus postage, or $808, plus postage, for a combined **Federal Register, Federal Register** Index and List of CFR Sections Affected (LSA) subscription; the microfiche edition of the **Federal Register** including the **Federal Register** Index and LSA is $165, plus postage. Six month subscriptions are available for one-half the annual rate. The prevailing postal rates will be applied to orders according to the delivery method requested. The price of a single copy of the daily **Federal Register,** including postage, is based on the number of pages: $11 for an issue containing less than 200 pages; $22 for an issue containing 200 to 400 pages; and $33 for an issue containing more than 400 pages. Single issues of the microfiche edition may be purchased for $3 per copy, including postage. Remit check or money order, made payable to the Superintendent of Documents, or charge to your GPO Deposit Account, VISA, MasterCard, American Express, or Discover. Mail to: U.S. Government Printing Office—New Orders, P.O. Box 979050, St. Louis, MO 63197-9000; or call toll free 1-866-512-1800, DC area 202-512-1800; or go to the U.S. Government Online Bookstore site, see *bookstore.gpo.gov.*

There are no restrictions on the republication of material appearing in the **Federal Register.**

How To Cite This Publication: Use the volume number and the page number. Example: 74 FR 12345.

Postmaster: Send address changes to the Superintendent of Documents, Federal Register, U.S. Government Printing Office, Washington, DC 20402, along with the entire mailing label from the last issue received.

SUBSCRIPTIONS AND COPIES

PUBLIC

Subscriptions:

Paper or fiche	**202–512–1800**
Assistance with public subscriptions	**202–512–1806**

General online information **202–512–1530; 1–888–293–6498**

Single copies/back copies:

Paper or fiche	**202–512–1800**
Assistance with public single copies	**1–866–512–1800 (Toll-Free)**

FEDERAL AGENCIES

Subscriptions:

Paper or fiche	**202–741–6005**
Assistance with Federal agency subscriptions	**202–741–6005**

FEDERAL REGISTER WORKSHOP

THE FEDERAL REGISTER: WHAT IT IS AND HOW TO USE IT

FOR: Any person who uses the Federal Register and Code of Federal Regulations.

WHO: Sponsored by the Office of the Federal Register.

WHAT: Free public briefings (approximately 3 hours) to present:

1. The regulatory process, with a focus on the Federal Register system and the public's role in the development of regulations.
2. The relationship between the Federal Register and Code of Federal Regulations.
3. The important elements of typical Federal Register documents.
4. An introduction to the finding aids of the FR/CFR system.

WHY: To provide the public with access to information necessary to research Federal agency regulations which directly affect them. There will be no discussion of specific agency regulations.

WHEN: Tuesday, July 14, 2009
9:00 a.m.–12:30 p.m.

WHERE: Office of the Federal Register
Conference Room, Suite 700
800 North Capitol Street, NW.
Washington, DC 20002

RESERVATIONS: (202) 741–6008

Printed on recycled paper.

Contents

Federal Register

Vol. 74, No. 131

Friday, July 10, 2009

Agriculture Department
See Animal and Plant Health Inspection Service
See Forest Service
See Natural Resources Conservation Service

Air Force Department
NOTICES
Privacy Act; Systems of Records, 33218–33219

Animal and Plant Health Inspection Service
RULES
Brucellosis in Cattle:
State and Area Classifications; Montana, 33139–33140
NOTICES
Pale Cyst Nematode:
Update of Quarantined Areas, 33202–33203

Army Department
See Engineers Corps
NOTICES
Publication of Revision and Consolidation of Military Freight Traffic Rules Publications, etc., 33219

Arts and Humanities, National Foundation
See National Foundation on the Arts and the Humanities

Blind or Severely Disabled, Committee for Purchase From People Who Are
See Committee for Purchase From People Who Are Blind or Severely Disabled

Centers for Disease Control and Prevention
NOTICES
Request for Nominations of Candidates to Serve on the Board of Scientific Counselors, etc., 33268

Children and Families Administration
NOTICES
Agency Information Collection Activities; Proposals, Submissions, and Approvals, 33264–33265

Civil Rights Commission
NOTICES
Meetings:
Florida Advisory Committee, 33204
Oklahoma Advisory Committee, 33204
Texas Advisory Committee, 33203

Coast Guard
RULES
Drawbridge Operation Regulations:
Annisquam River and Blynman Canal, Gloucester, MA, Public Event, 33146
Special Local Regulation, Fran Schnarr Open Water Championships:
Huntington Bay, NY, 33144–33146

Commerce Department
See Foreign–Trade Zones Board
See International Trade Administration
See National Institute of Standards and Technology
See National Oceanic and Atmospheric Administration
NOTICES
National Environmental Policy Act:
Categorical Exclusions, 33204–33207

Committee for Purchase From People Who Are Blind or Severely Disabled
NOTICES
Procurement List; Additions and Deletions, 33211–33214

Comptroller of the Currency
NOTICES
Agency Information Collection Activities; Proposals, Submissions, and Approvals, 33316–33317

Defense Department
See Air Force Department
See Army Department
See Engineers Corps
NOTICES
Meetings:
Board of Regents of the Uniformed Services University of the Health Sciences, 33215
Defense Advisory Committee on Military Personnel Testing, 33215
Defense Task Force on Sexual Assault in the Military Services, 33214
Privacy Act; Systems of Records, 33215–33216
Renewal of Department of Defense Federal Advisory Committees, 33216–33217

Education Department
NOTICES
Inviting Applications for New Fiscal Year (FY) 2009 Awards:
Technical Assistance and Dissemination to Improve Services and Results for Children with Disabilities, etc., 33226–33231
Technology and Media Services for Individuals with Disabilities–Center on Technology Implementation, 33219–33226

Energy Department
See National Nuclear Security Administration
PROPOSED RULES
Energy Conservation Programs for Certain Commercial and Industrial Equipment:
Test Procedures for Metal Halide Lamp Ballasts, 33171–33189
NOTICES
Meetings:
Advanced Scientific Computing Advisory Committee, 33231–33232

Engineers Corps
NOTICES
Environmental Impact Statements; Availability, etc.:
Potable Water Supply for Washington Parish Reservoir Project, 33217–33218
Meetings:
Inland Waterways Users Board, 33218

Environmental Protection Agency
RULES
Approval and Promulgation of Air Quality Implementation Plans:
Texas; Revisions to the 1-Hour Ozone Plan for the Beaumont/Port Arthur Area, 33146–33152
Pesticide Tolerances:
Buprofezin, 33153–33159
Indoxacarb, 33159–33165
Mandipropamid, 33165–33170
PROPOSED RULES
Approval and Promulgation of Air Quality Implementation Plans:
California, 33196–33200
Texas; Revisions to the 1-Hour Ozone Plan for the Beaumont/Port Arthur Area, etc., 33200
NOTICES
Environmental Impact Statements; Availability, etc., 33235–33237

Federal Accounting Standards Advisory Board
NOTICES
Release of Exposure Draft on Accounting for Federal Oil and Gas Resources, 33237

Federal Aviation Administration
RULES
Establishment of Class E Airspace:
Kona, HI, 33143

Federal Deposit Insurance Corporation
NOTICES
Meetings; Sunshine Act, 33237

Federal Election Commission
RULES
Procedural Rules for Audit Hearings, 33140–33143

Federal Highway Administration
NOTICES
Final Federal Agency Actions on Proposed Highway in California, 33315–33316

Federal Housing Financing Agency
NOTICES
Federal Home Loan Bank Members Selected for Community Support Review, 33237–33257

Food and Drug Administration
NOTICES
Agency Information Collection Activities; Proposals, Submissions, and Approvals, 33260–33264
Meetings:
Providing Effective Information to Consumers About Prescription Drug Risks and Benefits; Public Workshop, 33265–33267

Foreign–Trade Zones Board
NOTICES
Grant of Authority for Subzone Status:
Cornell Dubilier Marketing, Inc. (Electrolytic Capacitors), Liberty, SC, 33210

Forest Service
NOTICES
Environmental Impact Statements; Availability, etc.:
Proposed Aendment of Rogue River, Umpqua and Winema National Forest (NF) Land and Resource Management Plans for the Pacific Connector Gas Pipeline, 33201
Proposed Fees:
Authority: Federal Lands Recreation Enhancement Act, (Title VIII, Pub. L. 108–447), 33203

Health and Human Services Department
See Centers for Disease Control and Prevention
See Children and Families Administration
See Food and Drug Administration
See National Institutes of Health
NOTICES
Agency Information Collection Activities; Proposals, Submissions, and Approvals, 33257–33259

Homeland Security Department
See Coast Guard
See U.S. Customs and Border Protection

Housing and Urban Development Department
NOTICES
Federal Property Suitable as Facilities to Assist the Homeless, 33269–33271

Interior Department
See Land Management Bureau
See Minerals Management Service
See National Park Service

International Trade Administration
NOTICES
Application for Duty-Free Entry of Scientific Instruments, 33207–33208
Continuation of Antidumping Duty Order:
Certain Frozen Fish Fillets from the Socialist Republic of Vietnam, 33208

Justice Department
See Prisons Bureau
NOTICES
Lodging of Consent Decree Under the Comprehensive Environmental Response, Compensation, and Liability Act, 33278
Public Comment Period for Proposed Consent Decree and Settlement Agreement Under the Clean Air Act, RCRA and CERCLA, 33278–33279

Labor Department
See Occupational Safety and Health Administration

Land Management Bureau
NOTICES
Environmental Impact Statements; Availability, etc.:
Equus Beds Aquifer Recharge and Recovery Project, Equus Beds Division, Wichita Project, Kansas, 33274–33276

Minerals Management Service
NOTICES
Agency Information Collection Activities; Proposals, Submissions, and Approvals, 33272–33273

National Foundation on the Arts and the Humanities
NOTICES
Meetings:
Federal Council on Arts and Artifacts Indemnity Panel Advisory Committee, 33281

National Institute of Standards and Technology
NOTICES
Invention Available for Licensing, 33210

National Institutes of Health
NOTICES
Agency Information Collection Activities; Proposals, Submissions, and Approvals, 33259
Meetings:
National Institute of General Medical Sciences, 33265
National Institute on Drug Abuse, 33267–33268
Office of the Director, National Institutes of Health, 33268

National Nuclear Security Administration
NOTICES
Record of Decision:
Site-Wide Environmental Impact Statement for the Continued Operation of Los Alamos National Laboratory, Los Alamos, New Mexico, 33232–33235

National Oceanic and Atmospheric Administration
RULES
Fisheries of the Caribbean, Gulf of Mexico, and South Atlantic; Snapper–grouper Fishery of the South Atlantic:
Closure of the 2009 Commercial Fishery for Golden Tilefish in the South Atlantic, 33170
NOTICES
Draft Papahanaumokuakea Marine National Monument Science Plan; Availability and Public Meetings, 33209–33210
Issuance of Permits and Proposed Amendments:
Marine Mammals (File No. 10137), 33210–33211

National Park Service
NOTICES
Environmental Impact Statements; Availability, etc.:
Assateague Island National Seashore, Maryland and Virginia, 33276
Catoctin Mountain Park, Maryland, 33277–33278
Cuyahoga Valley National Park, Cuyahoga County,OH, 33274
Gateway National Recreation Area, New York and New Jersey, 33273–33274
White-tailed Deer Management Plan; Rock Creek Park, Washington, D.C., 33276–33277

Natural Resources Conservation Service
NOTICES
Environmental Impact Statements; Availability, etc.:
Pocasset River Watershed, Providence County, RI, 33201–33202

Nuclear Regulatory Commission
NOTICES
Availability of Draft Interim Staff Guidance Document for Fuel Cycle Facilities, 33281–33282
Draft Regulatory Guide: (DG)–1176:
Issuance, Availability, 33282–33283
Issuance of Renewed Facility License (No. TR–5), 33283

Occupational Safety and Health Administration
PROPOSED RULES
Illinois State Plan for Public Employees Only; Notice of Submission; Proposal to Grant Initial State Plan Approval; etc., 33189–33192
NOTICES
Meetings:
Advisory Committee on Construction Safety and Health (ACCSH) and ACCSH Work Group, 33279–33281

Prisons Bureau
NOTICES
Annual Determinations of Average Cost of Incarceration, 33279

Securities and Exchange Commission
NOTICES
Application:
GE Funds, et al., 33311–33313
Self-Regulatory Organizations; Proposed Rule Changes
NASDAQ OMX BX, Inc.; Correction, 33308
Self-Regulatory Organizations; Proposed Rule Changes:
Chicago Board Options Exchange, Inc., 33308–33309
International Securities Exchange, LLC, 33309–33311
NASDAQ Stock Market LLC, 33290–33293
National Securities Clearing Corp., 33307–33308
New York Stock Exchange LLC, 33283–33286, 33293–33307
NYSE Amex LLC, 33286–33290

Social Security Administration
NOTICES
Agency Information Collection Activities; Proposals, Submissions, and Approvals, 33313–33315

Surface Transportation Board
NOTICES
Change in Operators Exemption:
Mississippi Central Railroad Co.; Tishomingo Railroad Co., Inc., 33315

Transportation Department
See Federal Aviation Administration
See Federal Highway Administration
See Surface Transportation Board

Treasury Department
See Comptroller of the Currency

U.S. Customs and Border Protection
NOTICES
Accreditation and Approval of Amspec Services LLC as a Commercial Gauger and Laboratory, 33268–33269
Accreditation and Approval of Inspectorate America Corporation as a Commercial Gauger and Laboratory, 33269
Approval of The Strawn Group as a Commercial Gauger, 33269

Veterans Affairs Department
PROPOSED RULES
Grants to States for Construction or Acquisition of State Home Facilities:
Update of Authorized Beds, 33192–33196
NOTICES
Meetings:
Joint Biomedical Laboratory Research and Development and Clinical Science Research, etc., 33317

Reader Aids

Consult the Reader Aids section at the end of this page for phone numbers, online resources, finding aids, reminders, and notice of recently enacted public laws.

To subscribe to the Federal Register Table of Contents LISTSERV electronic mailing list, go to http://listserv.access.gpo.gov and select Online mailing list archives, FEDREGTOC-L, Join or leave the list (or change settings); then follow the instructions.

CFR PARTS AFFECTED IN THIS ISSUE

A cumulative list of the parts affected this month can be found in the Reader Aids section at the end of this issue.

9 CFR
78 33139

10 CFR
Proposed Rules:
431 33171

11 CFR
111 33140

14 CFR
71 33143

29 CFR
Proposed Rules:
1956 33189

33 CFR
100 33144
117 33146

38 CFR
Proposed Rules:
59 33192

40 CFR
52 33146
180 (3 documents) 33153, 33159, 33165
Proposed Rules:
52 (2 documents) 33196, 33200

50 CFR
622 33170

Rules and Regulations

Federal Register
Vol. 74, No. 131
Friday, July 10, 2009

This section of the FEDERAL REGISTER contains regulatory documents having general applicability and legal effect, most of which are keyed to and codified in the Code of Federal Regulations, which is published under 50 titles pursuant to 44 U.S.C. 1510.

The Code of Federal Regulations is sold by the Superintendent of Documents. Prices of new books are listed in the first FEDERAL REGISTER issue of each week.

DEPARTMENT OF AGRICULTURE

Animal and Plant Health Inspection Service

9 CFR Part 78

[Docket No. APHIS–2009–0040]

Brucellosis in Cattle; State and Area Classifications; Montana

AGENCY: Animal and Plant Health Inspection Service, USDA.

ACTION: Interim rule and request for comments.

SUMMARY: We are amending the brucellosis regulations concerning the interstate movement of cattle by changing the classification of Montana from Class A to Class Free. We have determined that Montana meets the standards for Class Free status. This action relieves certain restrictions on the interstate movement of cattle from Montana.

DATES: This interim rule is effective July 10, 2009. We will consider all comments that we receive on or before September 8, 2009.

ADDRESSES: You may submit comments by either of the following methods:

- *Federal eRulemaking Portal:* Go to *http://www.regulations.gov/fdmspublic/component/main?main=DocketDetail&d=APHIS-2009-0040* to submit or view comments and to view supporting and related materials available electronically.
- *Postal Mail/Commercial Delivery:* Please send two copies of your comment to Docket No. APHIS–2009–0040, Regulatory Analysis and Development, PPD, APHIS, Station 3A–03.8, 4700 River Road Unit 118, Riverdale, MD 20737–1238. Please state that your comment refers to Docket No. APHIS–2009–0040.

Reading Room: You may read any comments that we receive on this docket in our reading room. The reading room is located in room 1141 of the USDA South Building, 14th Street and Independence Avenue, SW., Washington, DC. Normal reading room hours are 8 a.m. to 4:30 p.m., Monday through Friday, except holidays. To be sure someone is there to help you, please call (202) 690–2817 before coming.

Other Information: Additional information about APHIS and its programs is available on the Internet at *http://www.aphis.usda.gov.*

FOR FURTHER INFORMATION CONTACT: Dr. Debbi A. Donch, National Brucellosis Epidemiologist and Program Manager, Ruminant Health Programs Staff, National Center for Animal Health Programs, VS, APHIS, 4700 River Road, Unit 43, Riverdale, MD 20737–1231; (301) 734–5952.

SUPPLEMENTARY INFORMATION:

Background

Brucellosis is a contagious disease affecting animals and humans, caused by bacteria of the genus *Brucella.*

The brucellosis regulations, contained in 9 CFR part 78 (referred to below as the regulations), provide a system for classifying States or portions of States according to the rate of *Brucella* infection present and the general effectiveness of a brucellosis control and eradication program. The classifications are Class Free, Class A, Class B, and Class C. States or areas that do not meet the minimum standards for Class C are required to be placed under Federal quarantine.

The brucellosis Class Free classification is based on a finding of no known brucellosis in cattle for the 12 months preceding classification as Class Free. The Class C classification is for States or areas with the highest rate of brucellosis. Class A and Class B fall between these two extremes. Restrictions on moving cattle interstate become less stringent as a State approaches or achieves Class Free status.

The standards for the different classifications of States or areas entail (1) maintaining a cattle herd infection rate not to exceed a stated level during 12 consecutive months; (2) tracing back to the farm of origin and successfully closing a stated percentage of all brucellosis reactor cases found in the course of Market Cattle Identification (MCI) testing; (3) maintaining a surveillance system that includes testing of dairy herds, participation of all recognized slaughtering establishments in the MCI program, identification and monitoring of herds at high risk of infection (including herds adjacent to infected herds and herds from which infected animals have been sold or received), and having an individual herd plan in effect within a stated number of days after the herd owner is notified of the finding of brucellosis in a herd he or she owns; and (4) maintaining minimum procedural standards for administering the program.

Before the publication of this interim rule, Montana was classified as a Class A State.

To attain and maintain Class Free status, a State or area must (1) remain free from field strain *Brucella abortus* infection for 12 consecutive months or longer; (2) trace back at least 90 percent of all brucellosis reactors found in the course of MCI testing to the farm of origin; (3) successfully close at least 95 percent of the MCI reactor cases traced to the farm of origin during the consecutive 12-month period immediately prior to the most recent anniversary of the date the State or area was classified Class Free; and (4) have a specified surveillance system, as described above, including an approved individual herd plan in effect within 15 days of locating the source herd or recipient herd.

The last brucellosis-affected cattle herd in Montana was detected in May 2008. The brucellosis reactor cattle in Montana were destroyed on May 27, 2008, and the affected herd was subsequently depopulated. Since then, no brucellosis-affected cattle herds have been detected in the State.

After reviewing the brucellosis program records for Montana, we have concluded that this State meets the standards for Class Free status. Therefore, we are removing Montana from the list of Class A States in § 78.41(b) and adding it to the list of Class Free States in § 78.41(a). This action relieves certain restrictions on moving cattle interstate from Montana.

Immediate Action

Immediate action is warranted to remove unnecessary restrictions on the interstate movement of cattle from Montana. Under these circumstances,

the Administrator has determined that prior notice and opportunity for public comment are contrary to the public interest and that there is good cause under 5 U.S.C. 553 for making this action effective less than 30 days after publication in the **Federal Register**.

We will consider comments we receive during the comment period for this interim rule (see **DATES** above). After the comment period closes, we will publish another document in the **Federal Register**. The document will include a discussion of any comments we receive and any amendments we are making to the rule.

Executive Order 12866 and Regulatory Flexibility Act

This rule has been reviewed under Executive Order 12866. For this action, the Office of Management and Budget has waived its review under Executive Order 12866.

Brucellosis is a contagious, costly disease of ruminant and other animals that can also affect humans. It is mainly a threat to cattle, bison, and swine. The disease causes decreased milk production, weight loss in animals, loss of young, infertility, and lameness. There is no known effective treatment. Depopulation of infected and exposed animals is the only effective means of disease containment and eradication.

The State of Montana has met all the requirements for obtaining Class Free status as outlined in the definition of ''Class Free State or area'' in § 78.1 of the regulations. This interim rule upgrades the brucellosis status of Montana from Class A to Class Free. Cattle and bison that are to be moved interstate from Class A States, except those moving directly to slaughter or to quarantined feedlots, must be tested before they are eligible for movement. Attaining Class Free status allows producers in Montana to forgo the cost of this testing.

Brucellosis testing, including veterinary fees and handling expenses, costs between $7.50 and $15 per test. The expenses eliminated as a result of this reclassification in status will not be significant for cattle owners in Montana. In 2007, there were 11,526 cattle and calf operations in Montana, with total sales of 1.84 million head of cattle.[1] The average per-head value in Montana was $1,050 in 2007.[2] Thus, the cost of testing would represent between 0.7 and 1.4 percent of the average value of the animal sold.

In 2001, 818,146 cattle moved interstate from Montana, excluding cattle moved directly to slaughter.[3] Assuming the current proportion of cattle moved interstate from Montana is similar to that in 2001, the overall annual cost for Montana cattle operations for brucellosis testing required under Class A classification is estimated to range between $6 million and $12 million.[4] These costs will not be borne with promulgation of this rule.

The Small Business Administration has established guidelines for determining whether an enterprise is considered small under the Regulatory Flexibility Act. An enterprise producing cattle and calves (North American Industry Classification System [NAICS] code 112111) is considered small if it has annual receipts of $750,000 or less. There were 11,526 farms with sales of cattle and calves in Montana in 2007. Over 98 percent of these farms had annual receipts not exceeding $750,000.[5]

We expect that the majority of cattle and calves operations that will be affected by the interim rule are small entities. The interim rule will benefit producers that sell cattle and calves out of State for breeding and feeding purposes. However, the savings from the forgone testing will be very small, estimated to be between 0.7 percent and 1.4 percent of the value of the animals sold.

Under these circumstances, the Administrator of the Animal and Plant Health Inspection Service has determined that this action will not have a significant economic impact on a substantial number of small entities.

Executive Order 12372

This program/activity is listed in the Catalog of Federal Domestic Assistance under No. 10.025 and is subject to Executive Order 12372, which requires intergovernmental consultation with State and local officials. (*See* 7 CFR part 3015, subpart V.)

Executive Order 12988

This interim rule has been reviewed under Executive Order 12988, Civil Justice Reform. This rule: (1) Preempts all State and local laws and regulations that are in conflict with this rule; (2) has no retroactive effect; and (3) does not require administrative proceedings before parties may file suit in court challenging this rule.

Paperwork Reduction Act

This interim rule contains no information collection or recordkeeping requirements under the Paperwork Reduction Act of 1995 (44 U.S.C. 3501 *et seq.*).

List of Subjects in 9 CFR Part 78

Animal diseases, Bison, Cattle, Hogs, Quarantine, Reporting and recordkeeping requirements, Transportation.

■ Accordingly, we are amending 9 CFR part 78 as follows:

PART 78—BRUCELLOSIS

■ 1. The authority citation for part 78 continues to read as follows:

Authority: 7 U.S.C. 8301–8317; 7 CFR 2.22, 2.80, and 371.4.

§ 78.41 [Amended]

■ 2. Section 78.41 is amended as follows:

■ a. In paragraph (a), by adding the word ''Montana,'' after the word ''Missouri,''.

■ b. In paragraph (b), by removing the word ''Montana'' and adding the word ''None'' in its place.

Done in Washington, DC, this 6th day of July 2009.

Kevin Shea,

Acting Administrator, Animal and Plant Health Inspection Service.

[FR Doc. E9–16336 Filed 7–9–09; 8:45 am]

BILLING CODE 3410–34–P

[1] USDA/National Agricultural Statistics Service (NASS), Cattle, released January 30, 2009.

[2] USDA/NASS, Meat Animal Production, Disposition, and Income: 2007 Summary, April 2008.

[3] Dennis A Shields and Kenneth H Mathews, Interstate Livestock Movements, USDA/Economic Research Service (ERS), LDP–M–108–01, June 2003 (*http://www.ers.usda.gov/publications/ldp/jun03/ldpm10801/ldpm10801.pdf*), and *http://www.ers.usda.gov/Data/InterstateLivestockMovements/StateShipments.xls.*

[4] We base this estimate on Montana's 2007 cattle inventory. The total cattle inventories in 2001 and 2007 were 2,550,000 and 2,589,679, respectively. The calculated values were obtained as follows: (1) $6.2 million (= 818,146/2,550,000*2,589,679*$7.5=$6,231,575) and (2) $12.5 million (=818,146/2,550,000*2,589,679*$15=$12,463,150). Cattle numbers are from USDA/NASS, Cattle, released on February 1, 2002 (*http://usda.mannlib.cornell.edu/usda/nass/Catt/2000s/2002/Catt-02-01-2002.pdf*) and USDA/NASS, 2007 Census of Agriculture.

[5] Based upon 2007 Census of Agriculture—State Data and the ''Small Business Size Standards by NAICS Industry,'' Code of Federal Regulations, Title 13, Chapter I.

FEDERAL ELECTION COMMISSION

11 CFR Part 111

[Notice 2009–12]

Procedural Rules for Audit Hearings

AGENCY: Federal Election Commission.

ACTION: Rule of Agency Procedure.

SUMMARY: The Federal Election Commission (''Commission'') is

instituting a program that provides committees that are audited pursuant to the Federal Election Campaign Act of 1971, as amended (''FECA'') with the opportunity to have a hearing before the Commission prior to the Commission's adoption of a Final Audit Report. Similar to the Commission's current program for hearings at the probable cause stage of the enforcement process, audit hearings will provide audited committees with the opportunity to present oral arguments to the Commission directly and give the Commission an opportunity to ask relevant questions prior to adopting a Final Audit Report. Further information about the procedures for the audit program is provided in the supplementary information that follows.

DATES: Effective July 27, 2009.

FOR FURTHER INFORMATION CONTACT: Joseph F. Stoltz, Assistant Staff Director, Audit Division, 999 E Street, NW., Washington, DC 20463, (202) 694–1650 or (800) 424–9530.

SUPPLEMENTARY INFORMATION: The Commission is instituting a program to afford committees that are the subject of a Commission audit the opportunity to participate in hearings (generally through counsel) and present oral arguments directly to the Commissioners prior to any Commission adoption of an audit report that includes findings that assert a potential violation of law.

I. Background

On June 11, 2003, the Commission held a hearing concerning its enforcement procedures. The Commission received comments from the public, many of which argued for increased transparency in Commission procedures and expanded opportunities to contest allegations. Comments and statements for the record are available at: *http://www.fec.gov/agenda/agendas2003/notice2003–09/comments.shtml.* In response to issues raised at the hearing, the Commission issued new rules of agency procedure. *See* Statement of Policy Regarding Deposition Transcripts in Nonpublic Investigations, 68 FR 50688 (Aug. 22, 2003); Statement of Policy Regarding Treasurers Subject to Enforcement Proceedings, 70 FR 3 (Jan. 3, 2005).

On December 8, 2006, the Commission published a proposal for a pilot program for probable cause hearings, and sought comments from the public. *See* Proposed Policy Statement Establishing Pilot Program for Probable Cause Hearings, 71 FR 71088 (Dec. 8, 2006). The comment period on the proposed policy statement closed on January 5, 2007. The Commission received four comments, all of which endorsed the proposed pilot program for probable cause hearings. These comments are available at: *http://www.fec.gov/law/policy.shtml#proposed* under the heading ''Pilot Program for Probable Cause Hearings.''

On February 8, 2007, the Commission decided by a vote of 6–0 to institute the pilot program. The program went into effect on February 16, 2007. The pilot program was designed to remain in effect for at least eight months, after which time a vote would be scheduled on whether the program should continue. The Commission found that the pilot program had been successful and the Commission announced that the program would become permanent. *See* Procedural Rules for Probable Cause Hearings, 72 FR 64919 (Nov. 19, 2007).

On December 8, 2008, the Commission issued a notice of public hearing and request for public comment on its compliance and enforcement processes. Agency Procedures (Notice of Public Hearing and Request for Public Comments), 73 FR 74495 (Dec. 8, 2008). On January 14–15, 2009, the Commission received comment and testimony regarding procedures and processes that it uses to resolve cases. At that time, many commenters praised the probable cause hearing program and some requested that a similar procedure be adopted with respect to other Commission processes, including audits. The comments received by the Commission, as well as the transcript of the hearing are available at: *http://www.fec.gov/law/policy/enforcement/publichearing011409.shtml.*

One of the questions specifically set forth in the Notice of public hearing and request for public comments was whether respondents should be given the opportunity to appear before the Commission at times such as when the Commission is considering audit reports that state violations of law. *See* 73 FR 74495, 97. Several commenters supported providing an opportunity for committees being audited to be heard directly by the Commission before the Commission issues a Final Audit Report. Based upon its experience with the probable cause hearing program, and public comments regarding hearings during the audit process, the Commission is instituting a new rule of agency procedure to expand the Commission's hearing procedures to include audits in which one or more findings assert a potential violation of law.

II. Procedures for Audit Hearings

A. Opportunity To Request a Hearing

The Commission is issuing a new rule of agency procedure allowing a committee that is being audited by the Commission's Audit Division to request a hearing prior to the Commission's adoption of a Final Audit Report when the Audit Division staff's draft Final Audit Report concludes that the committee violated FECA or Commission regulations. Currently, once the Audit Division completes its field work, it conducts an exit conference at which it presents its preliminary findings to the audited committee. Based upon the field work and the committee's response at the exit conference, the Audit Division prepares an interim or preliminary audit report that, in certain situations, the Commission considers in executive session prior to the report being sent to the committee being audited.[1] The committee then has the opportunity to respond in writing. The Audit Division then prepares a draft Final Audit Report for Commission consideration. If one or more Commissioners object to such report, the matter is discussed and decided in an open meeting of the Commission.

While all written submissions provided during the audit process are considered by the Commission under current practice, the Commission wishes to provide those being audited with an opportunity to address the Commission directly and in person, before the Commission considers adopting any Audit Division findings that a violation of the Act or Commission regulations occurred. Upon preparing its draft Final Audit Report, which takes into consideration the committee's exit conference discussion and response to the interim or preliminary audit report, the Audit Division will provide the audited committee with a copy of its draft Final Audit Report. In audits where the Audit Division recommends the Commission adopt findings that a violation of the Act or Commission regulations occurred, it shall attach a cover letter informing the committee of the opportunity to provide a written response and request an oral hearing before the Commission. Moreover, if the Office of General Counsel has provided any legal advice on the draft Final Audit Report, the Audit Division shall provide a copy of the Office of General Counsel's legal

[1] Pursuant to the Commission's regulations, the Audit Division prepares ''interim'' audit reports in Title 2 matters and ''preliminary'' audit reports in Title 26 matters.

memorandum to the committee. Within 15 days after receiving the draft Final Audit Report and any corresponding legal memoranda, the audited committee may respond in writing, and include a written request for a hearing. Any request for a hearing must be in writing and filed with the committee's response. Requestors who are unable to appear physically at a hearing may participate remotely, subject to the Commission's technical capabilities. Requestors wishing to participate remotely are advised to notify the Commission Secretary when they submit their written request for a hearing.

Hearings are voluntary, and the Commission will draw no adverse inference based on the committee's request for, or waiver of, such a hearing. Each request for a hearing must state with specificity why the hearing is being requested and what issues the committee expects to address. Absent good cause, to be determined at the sole discretion of the Commission, late requests will not be accepted. Committees are responsible for ensuring that their requests are timely received. The Commissioners shall be notified of any such request within 5 days of receipt of the response. The Commission will grant a request for an oral hearing if any two Commissioners agree that a hearing would help resolve significant or novel legal enforcement issues or significant questions about the application of the law to the facts. The Commission will inform the committee whether the Commission is granting the committee's request within 30 days of receipt of the request.

B. Hearing Procedures

The purpose of an oral hearing is to provide an audited committee with an opportunity to present their arguments in person to the Commissioners when the Audit Division staff's draft alleges that the committee violated FECA or Commission regulations, but *before* the Commission adopts the Final Audit Report. Consistent with current Commission regulations, a committee may be represented by counsel, at the committee's own expense, or may appear *pro se* at the oral hearing. *See* 11 CFR 111.23. Committees (or their counsel) will have the opportunity to present their arguments. Commissioners will have the opportunity to pose questions to the audited committee, or their counsel, if represented.

At the hearing, committees are expected to raise only issues that were identified in their hearing request. Similarly, absent extenuating circumstances, committees may not introduce any new documents at the hearing that were not previously provided to the Audit Division. Committees may discuss any issues presented in the Audit Division staff's draft Final Audit Report, and the request for a hearing should include specific citations to any authorities (including prior Commission actions) on which the committee is relying or intends to cite at the hearing. If audited committees discover new information after submission of their response to the draft Final Audit Report or need to raise new arguments for similarly extenuating circumstances, they should notify the Commission as soon as possible prior to the hearing. Commissioners may ask questions on any matter related to the audit and committees are free to raise any germane new issues in response.

Committees should notify the Secretary of the Commission at least one week prior to the scheduled date of the hearing if they intend to use charts, handouts, or audio-visual aids during their presentation to the Commission, to allow the Commission time to coordinate the handling of these arrangements with the court reporter and the Commission Secretary.

When non-final audit matters include information entitled to exemption under the Sunshine Act, a hearing will occur in an executive session of the Commission, and only the committee and their counsel may attend. Attendance by any other parties must be approved by the Commission in advance.

The Commission will determine the format and time allotted for each hearing at its discretion. Among the factors that the Commission may consider are agency time constraints, the complexity of the issues raised, and the extent of the Commission's interest. The Commission will determine the amount of time allocated for each portion of the hearing; the time limit may vary from hearing to hearing. The Commission anticipates that most hearings will begin with a brief opening statement by the committee or its counsel. Thereafter, Commissioners will have the opportunity to pose questions to the audited committee, and Commissioners may ask questions designed to elicit clarification from the Office of General Counsel or Office of the Staff Director. The General Counsel and the Staff Director will have the opportunity to pose questions to the audited committee, or their counsel, if represented. Hearings will normally conclude with closing remarks from the committee or its counsel.

Third-party witnesses may not be called to testify at an oral hearing. However, the Commission may request that the committee submit supplementary information or briefing after the hearing. The Commission discourages voluminous submissions. Supplementary information may be submitted only upon Commission request and no more than ten days after such a request from the Commission, unless the Commission's request for information imposes a different, Commission-approved deadline. Materials requested by the Commission and materials considered by the Commission in making its determination may be made part of the public record. *See* Statement of Policy Regarding Disclosure of Closed Enforcement and Related Files, 68 FR 70426 (Dec. 18, 2003).

When the hearing is held in an executive session, the Commission will have transcripts made of the hearings. The transcript will become part of the record of the audit and may be relied upon for Commission determinations. Committees may be bound by any representations made by the committee or its counsel at the hearing. The Commission will make the transcripts available to the committee for inspection as soon as practicable after the hearing, and committees may purchase copies of the transcript. Transcripts may be made public after the matter is closed in accordance with Commission policies on disclosure. Additionally, the Committee's response to the draft Final Audit Report will be placed on the public record as part of the file of the Final Audit Report.

C. Scheduling of Hearings

The Commission will seek to hold the hearing in a timely manner after receiving a committee's request for a hearing. The Commission will attempt to schedule the hearing at a mutually accepted date and time. If a committee is unable to accommodate the Commission's schedule, however, the Commission may decline to hold a hearing. The Commission reserves the right to reschedule any hearing. Where necessary, the Commission reserves the right to request from a committee an agreement tolling any upcoming deadline, including any statutory deadline or other deadline found in 11 CFR part 111.

D. Pilot Program

The Commission shall evaluate this new program, and consider whether it should, by an affirmative four votes of the Commission, be discontinued or modified. After one calendar year, the program shall continue as a pilot program until such time that the

Commission either terminates it by an affirmative four votes or makes it permanent by an affirmative four votes.

E. Conclusion

This notice establishes rules of agency practice or procedure. This notice does not constitute an agency regulation requiring notice of proposed rulemaking, opportunities for public comment, prior publication, and delay effective under 5 U.S.C. 553 of the Administrative Procedures Act (''APA''). The provisions of the Regulatory Flexibility Act, 5 U.S.C. 605(b), which apply when notice and comment are required by the APA or another statute, are not applicable.

Dated: July 7, 2009.

On behalf of the Commission.

Steven T. Walther,

Chairman, Federal Election Commission.

[FR Doc. E9–16422 Filed 7–9–09; 8:45 am]

BILLING CODE 6715–01–P

DEPARTMENT OF TRANSPORTATION

Federal Aviation Administration

14 CFR Part 71

[Docket No. FAA–2009–0002; Airspace Docket No. 09–AWP–1]

Establishment of Class E Airspace; Kona, HI

AGENCY: Federal Aviation Administration (FAA), DOT.

ACTION: Final rule.

SUMMARY: This action will establish Class E airspace at Kailua-Kona, HI. Additional controlled airspace is necessary to accommodate aircraft utilizing the Kona International Airport at Keahole, Kona, HI, when the Air Traffic Control Tower is non-operational. The FAA is taking this action to enhance the safety and management of aircraft operations at Kona International Airport at Keahole, Kona, HI.

DATES: *Effective Date:* 0901 UTC, October 22, 2009. The Director of the Federal Register approves this incorporation by reference action under 1 CFR part 51, subject to the annual revision of FAA Order 7400.9 and publication of conforming amendments.

FOR FURTHER INFORMATION CONTACT: Eldon Taylor, Federal Aviation Administration, Operations Support Group, Western Service Center, 1601 Lind Avenue, SW., Renton, WA 98057; telephone (425) 203–4537.

SUPPLEMENTARY INFORMATION:

History

On March 12, 2009, the FAA published in the **Federal Register** a notice of proposed rulemaking to establish additional controlled airspace at Kona, HI (74 FR 10691). Interested parties were invited to participate in this rulemaking effort by submitting written comments on the proposal to the FAA. No comments were received.

Class E airspace designations are published in paragraph 6005 of FAA Order 7400.9S signed October 3, 2008, and effective October 31, 2008, which is incorporated by reference in 14 CFR part 71.1. The Class E airspace designations listed in this document will be published subsequently in that Order.

The Rule

This action amends Title 14 Code of Federal Regulations (14 CFR) part 71 by establishing the Class E airspace at Kailua-Kona, HI. Additional controlled airspace designated as surface areas is necessary to accommodate aircraft operations at Kona International Airport at Keahole, Kona, HI, during specific dates and times established in advance by a Notice to Airmen, when the Air Traffic Control Tower is non-operational.

The FAA has determined this regulation only involves an established body of technical regulations for which frequent and routine amendments are necessary to keep them operationally current. Therefore, this regulation: (1) Is not a ''significant regulatory action'' under Executive Order 12866; (2) is not a ''significant rule'' under DOT Regulatory Policies and Procedures (44 FR 11034; February 26, 1979); and (3) does not warrant preparation of a regulatory evaluation as the anticipated impact is so minimal. Since this is a routine matter that will only affect air traffic procedures and air navigation, it is certified that this rule, when promulgated, will not have a significant economic impact on a substantial number of small entities under the criteria of the Regulatory Flexibility Act. The FAA's authority to issue rules regarding aviation safety is found in Title 49 of the U.S. Code. Subtitle 1, Section 106 discusses the authority of the FAA Administrator. Subtitle VII, Aviation Programs, describes in more detail the scope of the agency's authority. This rulemaking is promulgated under the authority described in Subtitle VII, Part A, Subpart I, Section 40103. Under that section, the FAA is charged with prescribing regulations to assign the use of airspace necessary to ensure the safety of aircraft and the efficient use of airspace. This regulation is within the scope of that authority as it establishes additional controlled airspace at Kona International Airport at Keahole, Kona, HI.

List of Subjects in 14 CFR Part 71

Airspace, Incorporation by reference, Navigation (air).

Adoption of the Amendment

In consideration of the foregoing, the Federal Aviation Administration amends 14 CFR part 71 as follows:

PART 71—DESIGNATION OF CLASS A, B, C, D, AND E AIRSPACE AREAS; AIR TRAFFIC SERVICE ROUTES; AND REPORTING POINTS

■ 1. The authority citation for 14 CFR part 71 continues to read as follows:

Authority: 49 U.S.C. 106(g), 40103, 40113, 40120; E. O. 10854, 24 FR 9565, 3 CFR, 1959–1963 Comp., p. 389.

§ 71.1 [Amended]

■ 2. The incorporation by reference in 14 CFR 71.1 of the Federal Aviation Administration Order 7400.9S, Airspace Designations and Reporting Points, signed October 3, 2008, and effective October 31, 2008 is amended as follows:

Paragraph 6002 Class E airspace Designated as Surface Areas.

* * * * *

AWP HI E2 Kailua-Kona, HI [New]

Kona International Airport at Keahole, HI
(Lat. 19°44′20″ N., long. 156°02′44″ W.)

That airspace extending upward from the surface to and including 2,500 feet MSL within a 4.3-mile radius of Kona International Airport at Keahole. This Class E airspace area is effective during the specific dates and times established in advance by a Notice to Airmen. The effective date and time will thereafter be continuously published in the Airport/Facility Directory, Pacific Chart Supplement.

* * * * *

Issued in Seattle, Washington, on June 30, 2009.

H. Steve Karnes,

Acting Manager, Operations Support Group, Western Service Center.

[FR Doc. E9–16275 Filed 7–9–09; 8:45 am]

BILLING CODE 4910–13–P

DEPARTMENT OF HOMELAND SECURITY

Coast Guard

33 CFR Part 100

[USCG–2009–0520]

RIN 1625–AA08

Special Local Regulation, Fran Schnarr Open Water Championships, Huntington Bay, NY

AGENCY: Coast Guard, DHS.

ACTION: Temporary final rule.

SUMMARY: The Coast Guard has established a temporary Special Local Regulation (SLR) for the waters of Huntington Bay, New York for the 2009 Fran Schnarr Open Water Championships. This SLR is necessary to provide for the safety of life on the navigable waters of Huntington Bay by protecting swimmers from the hazards imposed by vessel traffic. This action is intended to increase the safety of the swimmers by limiting vessel access to a portion of Huntington Bay, New York during the swim event being held on July 12th, 2009. Entry into this area will be prohibited unless authorized by the Captain of the Port Long Island Sound or the designated on-scene patrol personnel.

DATES: This rule is effective from 7:15 a.m. through 11:30 a.m. on July 12th, 2009.

ADDRESSES: Documents indicated in this preamble as being available in the docket are part of docket USCG–2009–0520 and are available online by going to *http://www.regulations.gov*, selecting the Advanced Docket Search option on the right side of the screen, inserting USCG–2009–0520 in the Docket ID box, pressing Enter, and then clicking on the item in the Docket ID column. They are also available for inspection or copying at the Docket Management Facility (M–30), U.S. Department of Transportation, West Building Ground Floor, Room W12–140, 1200 New Jersey Avenue, SE., Washington, DC 20590, between 9 a.m. and 5 p.m., Monday through Friday, except Federal holidays.

FOR FURTHER INFORMATION CONTACT: If you have questions on this temporary rule, call or e-mail MSTC Christie Dixon, Prevention Department, USCG Sector Long Island Sound at 203–468–4459, *e-mail: christie.m.dixon@uscg.mil*. If you have questions on viewing the docket, call Renee V. Wright, Program Manager, Docket Operations, telephone 202–366–9826.

SUPPLEMENTARY INFORMATION:

Regulatory Information

The Coast Guard is issuing this temporary final rule without prior notice and opportunity to comment pursuant to authority under section 4(a) of the Administrative Procedure Act (APA) (5 U.S.C. 553(b)). This provision authorizes an agency to issue a rule without prior notice and opportunity to comment when the agency for good cause finds that those procedures are ''impracticable, unnecessary, or contrary to the public interest.'' Under 5 U.S.C. 553(b)(B), the Coast Guard finds that good cause exists for not publishing a notice of proposed rulemaking (NPRM) with respect to this rule because while this is an annual event, the dates and proposed race course were not made available to the Coast Guard in sufficient time to allow for a notice and comment period. A cancellation of the swim event in order to provide for a notice and comment period is impractical and contrary to the public interest in holding this event.

Under 5 U.S.C. 553(d)(3), the Coast Guard finds that good cause exists for making this rule effective less than 30 days after publication in the **Federal Register.** Immediate action is needed to restrict and control maritime traffic transiting the waters of Huntington Bay, New York during the swim event in order to ensure the safety of the participants and spectators. A delay or cancellation of the swim event in order to accommodate an effective date 30 days after publication is contrary to the public's interest in holding this event.

Background and Purpose

Over the last several years, Metropolitan Swimming, Inc. has hosted an annual open water championship swim on the waters of Huntington Bay, NY during a single day in July. This swim has historically involved up to 150 swimmers and accompanying safety craft. Currently there is no regulation in place to protect the swimmers or safety craft from the hazards imposed by passing water traffic and other water related activities.

To ensure the continued safety of the swimmers, safety craft and the boating public, the Coast Guard has established a temporary special local regulation around the race course for the duration of the race, from 7:15 a.m. to 11:30 a.m. on July 12th, 2009.

Discussion of Rule

The Coast Guard has established this temporary special local regulation on the navigable waters of Huntington Bay, NY to exclude all unauthorized persons and vessels from approaching within 100 yards of the planned race course which consists of the following points: Start/Finish at approximate location 40°54′25.8″ N 073°24′28.8″ N, East Turn at approximate location 40°54′45″ N 073°23′36.6″ N and a West Turn at approximate location 40°54′31.2″ N 073°25′21″ N. This action is intended to prohibit vessel traffic in this portion of Huntington Bay, NY to provide for the safety of swimmers, swimmer safety craft and the boating community from the hazards posed by vessels operating near persons participating in this open water swim.

The temporary special local regulation will only be enforced for approximately four hours and fifteen minutes on the day of the race. Marine traffic that may safely do so, may transit outside of the regulated area during the enforcement period, allowing navigation in all other portions of Huntington Bay, NY not covered by this rule. Entry into the designated area would be prohibited unless authorized by the Captain of the Port Long Island Sound or the designated on-scene patrol personnel. Notification of the race date and subsequent enforcement of the special local regulation will be made via marine broadcasts and broadcast notice to mariners. Any violation of the special local regulation described herein is punishable by, among others, civil and criminal penalties, *in rem* liability against the offending vessel, and license sanctions.

Regulatory Analyses

We developed this rule after considering numerous statutes and executive orders related to rulemaking. Below we summarize our analyses based on 13 of these statutes or executive orders.

Regulatory Planning and Review

This rule is not a significant regulatory action under section 3(f) of Executive Order 12866, Regulatory Planning and Review, and does not require an assessment of potential costs and benefits under section 6(a)(3) of that Order. The Office of Management and Budget has not reviewed it under that Order.

We expect the economic impact of this rule to be so minimal that a full Regulatory Evaluation is unnecessary. This regulation may have some impact on the public, but the potential impact would be minimized for the following reason: vessels may transit in all areas of Huntington Bay, NY other than the area of the SLR with minimal increased transit time and the SLR will only be enforced for approximately four and a quarter hours on July 12th, 2009.

Small Entities

Under the Regulatory Flexibility Act (5 U.S.C. 601–612), we have considered whether this rule would have a significant economic impact on a substantial number of small entities. The term ''small entities'' comprises small businesses, not-for-profit organizations that are independently owned and operated and are not dominant in their fields, and governmental jurisdictions with populations of less than 50,000.

The Coast Guard certifies under 5 U.S.C. 605(b) that this rule will not have a significant economic impact on a substantial number of small entities. This rule may affect the following entities, some of which may be small entities: the owners or operators of vessels intending to transit in those portions of Huntington Bay, NY covered by the SLR. For the reasons outlined in the Regulatory Evaluation section above, this rule will not have a significant impact on a substantial number of small entities.

Assistance for Small Entities

Under section 213(a) of the Small Business Regulatory Enforcement Fairness Act of 1996 (Pub. L. 104–121), we offer to assist small entities in understanding the rule so that they can better evaluate its effects on them and participate in the rulemaking process.

Small businesses may send comments on the actions of Federal employees who enforce, or otherwise determine compliance with, Federal regulations to the Small Business and Agriculture Regulatory Enforcement Ombudsman and the Regional Small Business Regulatory Fairness Boards. The Ombudsman evaluates these actions annually and rates each agency's responsiveness to small business. If you wish to comment on actions by employees of the Coast Guard, call 1–888–REG–FAIR (1–888–734–3247). The Coast Guard will not retaliate against small entities that question or complain about this rule or any policy or action of the Coast Guard.

Collection of Information

This rule calls for no new collection of information under the Paperwork Reduction Act of 1995 (44 U.S.C. 3501–3520).

Federalism

A rule has implications for federalism under Executive Order 13132, Federalism, if it has a substantial direct effect on State or local governments and would either preempt State law or impose a substantial direct cost of compliance on them. We have analyzed this rule under that Order and have determined that it does not have implications for federalism.

Unfunded Mandates Reform Act

The Unfunded Mandates Reform Act of 1995 (2 U.S.C. 1531–1538) requires Federal agencies to assess the effects of their discretionary regulatory actions. In particular, the Act addresses actions that may result in the expenditure by a State, local, or tribal government, in the aggregate, or by the private sector of $100,000,000 or more in any one year. Though this rule will not result in such an expenditure, we do discuss the effects of this rule elsewhere in this preamble.

Taking of Private Property

This rule will not effect a taking of private property or otherwise have taking implications under Executive Order 12630, Governmental Actions and Interference with Constitutionally Protected Property Rights.

Civil Justice Reform

This rule meets applicable standards in sections 3(a) and 3(b)(2) of Executive Order 12988, Civil Justice Reform, to minimize litigation, eliminate ambiguity, and reduce burden.

Protection of Children

We have analyzed this rule under Executive Order 13045, Protection of Children from Environmental Health Risks and Safety Risks. This rule is not an economically significant rule and does not create an environmental risk to health or risk to safety that may disproportionately affect children.

Indian Tribal Governments

This rule does not have tribal implications under Executive Order 13175, Consultation and Coordination with Indian Tribal Governments, because it does not have a substantial direct effect on one or more Indian tribes, on the relationship between the Federal Government and Indian tribes, or on the distribution of power and responsibilities between the Federal Government and Indian tribes.

Energy Effects

We have analyzed this rule under Executive Order 13211, Actions Concerning Regulations That Significantly Affect Energy Supply, Distribution, or Use. We have determined that it is not a ''significant energy action'' under that order because it is not a ''significant regulatory action'' under Executive Order 12866 and is not likely to have a significant adverse effect on the supply, distribution, or use of energy. The Administrator of the Office of Information and Regulatory Affairs has not designated it as a significant energy action. Therefore, it does not require a Statement of Energy Effects under Executive Order 13211.

Technical Standards

The National Technology Transfer and Advancement Act (NTTAA) (15 U.S.C. 272 note) directs agencies to use voluntary consensus standards in their regulatory activities unless the agency provides Congress, through the Office of Management and Budget, with an explanation of why using these standards would be inconsistent with applicable law or otherwise impractical. Voluntary consensus standards are technical standards (*e.g.,* specifications of materials, performance, design, or operation; test methods; sampling procedures; and related management systems practices) that are developed or adopted by voluntary consensus standards bodies.

This rule does not use technical standards. Therefore, we did not consider the use of voluntary consensus standards.

Environment

We have analyzed this rule under Department of Homeland Security Management Directive 023–01 and Commandant Instruction M16475.lD, which guide the Coast Guard in complying with the National Environmental Policy Act of 1969 (NEPA) (42 U.S.C. 4321–4370f), and have concluded this action is one of a category of actions which do not individually or cumulatively have a significant effect on the human environment. This rule is categorically excluded, under figure 2–1, paragraph (34)(h), of the Instruction. This rule involves a special local regulation issued in conjunction with a marine event. An environmental analysis checklist and a categorical exclusion determination will be available in the docket where indicated under **ADDRESSES**.

List of Subjects in 33 CFR Part 100

Marine safety, Navigation (water), Reporting and recordkeeping requirements, Waterways.

■ For the reasons discussed in the preamble, the Coast Guard amends 33 CFR part 100 as follows:

PART 100—SAFETY OF LIFE ON NAVIGABLE WATERS

■ 1. The authority citation for part 100 continues to read as follows:

Authority: 33 U.S.C. 1233.

■ 2. Add temporary § 100.120 to read as follows:

§ 100.120 Fran Schnarr Open Water Championships, Huntington Bay, New York.

(a) *Regulated area.* All navigable waters of Huntington Bay, NY within 100 yards of the swim race course consisting of the following points: Start/Finish at approximate position 40°54′25.8″ N 073°24′28.8″ N, East Turn at approximate position 40°54′45″ N 073°23′36.6″ N and a West Turn at approximate position 40°54′31.2″ N 073°25′21″ N.

(b) *Definitions.* The following definition applies to this section: *Designated on-scene patrol personnel* means any commissioned, warrant or petty officer of the U.S. Coast Guard operating Coast Guard vessels who has been authorized to act on the behalf of the Captain of the Port Long Island Sound.

(c) *Special local regulations.* (1) The general regulations contained in 33 CFR § 100.35 and § 100.40 apply.

(2) In accordance with the general regulations in § 100.35 of this part, no person or vessel may enter, transit, or remain within the regulated area during the effective period of the regulation unless they are officially participating in the Fran Schnarr Open Water Swim event or are otherwise authorized by the Captain of the Port Long Island Sound or the designated on-scene patrol personnel.

(3) All persons and vessels must comply with the instructions from the Coast Guard Captain of the Port Long Island Sound or the designated on-scene patrol personnel. The designated on-scene patrol personnel may delay, modify, or cancel the swim event as conditions or circumstances require.

(4) Upon being hailed by a U.S. Coast Guard vessel by siren, radio, flashing light or other means, the operator of the vessel must proceed as directed.

(5) Persons and vessels desiring to enter the regulated area may request permission to enter from the designated on-scene patrol personnel on VHF–16 or from the Captain of the Port Long Island Sound via phone at (203) 468–4401.

(d) *Effective Period.* This rule is in effect from 7:15 a.m. to 11:30 a.m. on July 12th, 2009. Notification of the swim event and enforcement of the special local regulation will be made via separate marine broadcasts and broadcast notice to mariners.

Dated: June 19, 2009.

Daniel A. Ronan,

Captain, U.S. Coast Guard, Captain of the Port Long Island Sound.

[FR Doc. E9–16307 Filed 7–9–09; 8:45 am]

BILLING CODE 4910–15–P

DEPARTMENT OF HOMELAND SECURITY

Coast Guard

33 CFR Part 117

[Docket No. USCG–2009–0546]

Drawbridge Operation Regulations; Annisquam River and Blynman Canal, Gloucester, MA, Public Event

AGENCY: Coast Guard, DHS.

ACTION: Notice of temporary deviation from regulations.

SUMMARY: The Commander, First Coast Guard District, has issued a temporary deviation from the regulation governing the operation of the Blynman (SR127) Bridge across the Blynman Canal at mile 0.0, at Gloucester, Massachusetts. This deviation is necessary to facilitate the 2009 Gloucester Triathlon. The deviation allows the bridge to remain in the closed position during this public event in the interest of public safety.

DATES: This deviation is effective from 9 a.m. through 11 a.m. on August 9, 2009.

ADDRESSES: Documents mentioned in this preamble as being available in the docket are part of docket USCG–2009–0546 and are available online at *http://www.regulations.gov,* selecting the Advanced Docket Search option on the right side of the screen, inserting USCG–2009–0546 in the docket ID box, pressing enter, and then clicking on the item in the Docket ID column. This material is also available for inspection or copying at the Docket Management Facility (M–30), U.S. Department of Transportation, West Building Ground Floor, Room W12–140, 1200 New Jersey Avenue, SE., Washington, DC 20590, between 9 a.m. and 5 p.m., Monday through Friday, except Federal holidays.

FOR FURTHER INFORMATION CONTACT: If you have questions on this rule, call or e-mail Mr. John McDonald, Project Officer, First Coast Guard District, telephone (617) 223–8364, *john.w.mcdonald@uscg.mil.* If you have questions on viewing the docket, call Renee V. Wright, Program Manager, Docket Operations, telephone 202–366–9826.

SUPPLEMENTARY INFORMATION: The Blynman (SR127) Bridge, across the Blynman Canal at mile 0.0, at Gloucester, has a vertical clearance in the closed position of 7 feet at mean high water and 16 feet at mean low water. The existing drawbridge operation regulations are listed at 33 CFR 117.586.

The waterway supports both commercial and seasonal recreational vessel traffic.

Under this deviation the Blynman (SR127) Bridge may remain in the closed position from 9 a.m. through 11 a.m. on August 9, 2009, to facilitate a public event, the 2009 Gloucester Triathlon. Vessels that can pass under the closed draws may do so at any time.

This deviation is necessary for public safety, to facilitate vehicular traffic management during the 2009 Gloucester Triathlon.

In accordance with 33 CFR 117.35(e), the bridge must return to its regular operating schedule immediately at the end of the designated time period. This deviation from the operating regulations is authorized under 33 CFR 117.35.

Dated: June 23, 2009.

Gary Kassof,

Bridge Program Manager, First Coast Guard District.

[FR Doc. E9–16395 Filed 7–9–09; 8:45 am]

BILLING CODE 4910–15–P

ENVIRONMENTAL PROTECTION AGENCY

40 CFR Part 52

[EPA–R06–OAR–2005–TX–0005; FRL–8928–6]

Approval and Promulgation of Air Quality Implementation Plans; Texas; Revisions to the 1-Hour Ozone Plan for the Beaumont/Port Arthur Area: Control of Air Pollution From Volatile Organic Compounds, Nitrogen Compounds, and Reasonably Available Control Technology

AGENCY: Environmental Protection Agency (EPA).

ACTION: Direct final rule.

SUMMARY: EPA is approving part of two Beaumont-Port Arthur (BPA) State Implementation Plan (SIP) revisions that were submitted separately by the State of Texas on October 15, 2005. The revisions being approved pertain to volatile organic compound (VOC) control requirements for batch processing and ship building and ship repair, and also to Reasonably Available Control Technology (RACT) requirements, for the Beaumont/Port Arthur (BPA) 1-hour ozone serious nonattainment area. In today's action, EPA is approving: The State's changes to the batch process rules and the shipbuilding and ship repair rules that lower the threshold for affected sources of VOC emissions to the serious area requirements of 50 tons per year (tpy),

and the State's demonstration that the BPA area meets RACT requirements for sources of VOC and NO_X emissions for the 1-hour ozone standard. These revisions meet statutory and regulatory requirements, and are consistent with EPA's guidance. The EPA is approving these revisions pursuant to section 110 and part D of the Federal Clean Air Act (the Act).

DATES: This direct final rule will be effective *September 8, 2009* without further notice, unless EPA receives relevant adverse comments by August 10, 2009. If EPA receives such comment, EPA will publish a timely withdrawal of the direct final rule in the **Federal Register** informing the public that this rule will not take effect.

ADDRESSES: Submit your comments, identified by Docket No. EPA–R06–OAR–2005–TX–0005, by one of the following methods:

- *Federal eRulemaking Portal: http://www.regulations.gov.* Follow the on-line instructions for submitting comments.
- *EPA Region 6 ''Contact Us'' Web site: http://epa.gov/region6/r6coment.htm.* Please click on ''6PD'' (Multimedia) and select ''Air'' before submitting comments.
- *E-mail:* Mr. Guy Donaldson at *donaldson.guy@epa.gov.* Please also send a copy by e-mail to the person listed in the **FOR FURTHER INFORMATION CONTACT** section below.
- *Fax:* Mr. Guy Donaldson, Chief, Air Planning Section (6PD–L), at fax number 214–665–7263.
- *Mail:* Mr. Guy Donaldson, Chief, Air Planning Section (6PD–L), Environmental Protection Agency, 1445 Ross Avenue, Suite 1200, Dallas, Texas 75202–2733.
- *Hand or Courier Delivery:* Mr. Guy Donaldson, Chief, Air Planning Section (6PD–L), Environmental Protection Agency, 1445 Ross Avenue, Suite 1200, Dallas, Texas 75202–2733. Such deliveries are accepted only between the hours of 8 a.m. and 4 p.m. weekdays except for legal holidays. Special arrangements should be made for deliveries of boxed information.

Instructions: Direct your comments to Docket ID No. EPA–R06–OAR–2005–TX–0005. EPA's policy is that all comments received will be included in the public docket without change and may be made available online at *http://www.regulations.gov*, including any personal information provided, unless the comment includes information claimed to be Confidential Business Information (CBI) or other information whose disclosure is restricted by statute. Do not submit information that you consider to be CBI or otherwise protected through *http://www.regulations.gov* or e-mail. The *http://www.regulations.gov* Web site is an ''anonymous access'' system, which means EPA will not know your identity or contact information unless you provide it in the body of your comment. If you send an e-mail comment directly to EPA without going through *http://www.regulations.gov* your e-mail address will be automatically captured and included as part of the comment that is placed in the public docket and made available on the Internet. If you submit an electronic comment, EPA recommends that you include your name and other contact information in the body of your comment and with any disk or CD–ROM you submit. If EPA cannot read your comment due to technical difficulties and cannot contact you for clarification, EPA may not be able to consider your comment. Electronic files should avoid the use of special characters, any form of encryption, and be free of any defects or viruses.

Docket: All documents in the docket are listed in the *http://www.regulations.gov* index. Although listed in the index, some information is not publicly available, *e.g.*, CBI or other information whose disclosure is restricted by statute. Certain other material, such as copyrighted material, will be publicly available only in hard copy. Publicly available docket materials are available either electronically in *http://www.regulations.gov* or in hard copy at the Air Planning Section (6PD–L), Environmental Protection Agency, 1445 Ross Avenue, Suite 700, Dallas, Texas 75202–2733. The file will be made available by appointment for public inspection in the Region 6 FOIA Review Room between the hours of 8:30 a.m. and 4:30 p.m. weekdays except for legal holidays. Contact the person listed in the **FOR FURTHER INFORMATION CONTACT** paragraph below or Mr. Bill Deese at 214–665–7253 to make an appointment. If possible, please make the appointment at least two working days in advance of your visit. There will be a 15 cent per page fee for making photocopies of documents. On the day of the visit, please check in at the EPA Region 6 reception area at 1445 Ross Avenue, Suite 700, Dallas, Texas.

The State submittal is also available for public inspection at the State Air Agency listed below during official business hours by appointment: Texas Commission on Environmental Quality (TCEQ), Office of Air Quality, 12124 Park 35 Circle, Austin, Texas 78753.

FOR FURTHER INFORMATION CONTACT: Ellen Belk, Air Planning Section (6PD–L), Environmental Protection Agency, Region 6, 1445 Ross Avenue, Suite 700, Dallas, Texas 75202–2733, telephone (214) 665–2164; fax number 214–665–7263; e-mail address *belk.ellen@epa.gov.*

SUPPLEMENTARY INFORMATION: Throughout this document, whenever ''we'' ''us'' or ''our'' is used, we mean the EPA.

Table of Contents

I. What Action Is EPA Taking?
II. Control of VOC Emissions for Batch Processes and Shipbuilding and Ship Repair
1. What Has the State Submitted?
2. What Are the Requirements of Texas' Regulation for Control of VOCs?
3. Why Is EPA Approving Texas' Regulation for Control of VOCs?
III. Reasonably Available Control Technology (RACT) for the 1-hr Ozone BPA Area
1. VOC RACT
2. NO_X RACT
IV. What Is the Process for EPA To Approve This SIP Revision?
V. Final Action
VI. Statutory and Executive Order Reviews

I. What Action Is EPA Taking?

We are approving parts of two State Implementation Plan (SIP) revisions containing VOC controls submitted by the State of Texas pertaining to the BPA 1-hour ozone serious nonattainment area, as well as the State's demonstration that the BPA area meets RACT requirements for sources of VOC and NO_X emissions for the 1-hour ozone standard. Specifically, the revisions to the batch process rules and shipbuilding and ship repair rules lower VOC emission exemption levels for batch process operations and shipbuilding and ship repair operations in the BPA area from 100 tpy to 50 tpy to reflect the classification status of the BPA area as serious under the 1-hour standard, revising sections 115.167, 115.169, 115.427, and 115.429 of Title 30 of the Texas Administrative Code, Chapter 115 (30 TAC 115). The SIP revisions being approved today also include a demonstration that the BPA area meets the RACT requirements for VOC and NO_X for a serious 1-hour ozone nonattainment area. RACT is the lowest emission limit that a particular source is capable of meeting by the application of the control technology that is reasonably available considering technological and economic feasibility. RACT requirements for ozone nonattainment areas can be found in section 182 of the Act. For its RACT demonstration, the State relies upon previously approved VOC and NO_X SIP rules (*e.g.,* 65 FR

64148, October 26, 2000), as well as the VOC rule changes for batch process and shipbuilding and ship repair being approved in this action. EPA is finding that the BPA 1-hour ozone serious nonattainment area meets the RACT requirements for VOCs and NO_X.

II. Control of VOC Emissions in Batch Processes and Shipbuilding and Ship Repair

1. What Has the State Submitted?

This action addresses part of two Texas submittals for Control of VOCs. The first submittal, entitled ''Concerning Revisions to 30 TAC Chapter 115 Control of Air Pollution from Volatile Organic Compounds'' was adopted September 9, 2005, by the State of Texas and submitted to EPA for approval as a SIP revision on October 15, 2005. This submittal included the following: (1) Revising VOC control requirements for the following source categories in the BPA area to meet the serious area VOC RACT requirements: Shipbuilding and Ship Repair, and Batch Processes, and (2) removing a contingency measure requirement for controls for loading and unloading of VOC from marine vessels. In this action, EPA is addressing only the first of these components: changes to the rules for Shipbuilding and Ship Repair, and Batch Processes, in the BPA area. We will take action on the second component in a separate **Federal Register** later. We note that the BPA area currently meets RACT requirements to limit air emissions of VOC and hazardous air pollutants (HAP) from new and existing marine tank vessel loading operations (30 TAC 115.549). Today, we are approving the revised VOC rules as part of the Texas SIP. We also are finding that these revised VOC rules meet RACT for the BPA serious 1-hour ozone nonattainment area.

The second submittal, ''Concerning Revisions to the Attainment Demonstration for the Beaumont/Port Arthur Ozone Nonattainment Area'' was also adopted September 9, 2005, by the State and submitted October 15, 2005, to EPA for approval as a SIP revision. This second submittal addressed four of the BPA area's outstanding 1-hour ozone obligations: (1) Major source applicability for RACT, (2) Clean-Fuel Vehicle Programs, (3) Reasonably Available Control Measures (RACM), and (4) a contingency measure for marine vessel loading, and also provided a demonstration of attainment for the 1997 8-hour ozone standard and an associated motor vehicle emissions budget (MVEB). In this action, EPA is addressing only the first of these components, the State's VOC and NO_X RACT demonstration. We will take action upon the other components later in **Federal Register** notices. Today, we are finding that the NO_X rules approved on October 26, 2000 (65 FR 64148) meet RACT and that the BPA area meets the 1-hour ozone serious area RACT requirements for VOC and NO_X.

2. What Are the Requirements of Texas' Regulation for Control of VOCs?

VOC control regulations for two source categories are being revised to increase the level of control required: batch process operations, and shipbuilding and repair operations. Today's action will change the exemption levels in these two categories from 100 tpy to 50 tpy of VOC, so that all of the source categories in the BPA area have a threshold consistent with the threshold of 50 tpy or greater for serious 1-hour ozone nonattainment areas.

In 2004, the BPA area was reclassified from a moderate to a serious nonattainment area for the 1-hour ozone standard, which resulted in a change in the major source applicability definition from 100 tpy to 50 tpy. TCEQ staff reviewed the VOC point source inventory to determine whether all major sources were covered by VOC RACT rules and found that, with the exception of the batch process rules and the shipbuilding and ship repair rules, all other source categories were covered by a RACT SIP rule in the BPA area with a threshold consistent with the threshold of 50 tpy for serious 1-hour ozone nonattainment areas.

This rule will affect VOC-emitting facilities in the three counties in the BPA 1-hour ozone serious nonattainment area. Table 1 lists the affected Texas Counties:

TABLE 1—COUNTIES AFFECTED BY THIS RULEMAKING

Counties in BPA 1-hour ozone nonattainment area affected by this rulemaking
Hardin
Jefferson
Orange

Texas' Chapter 115 regulations control VOC emissions for many categories of sources. In particular, this rulemaking affects VOC control requirements for the following source categories in the BPA area to meet the serious area VOC RACT requirements: Shipbuilding and Ship Repair [30 TAC 115.427(a)(3)(H) and 30 TAC 115.429(c)], and Batch Processes [30 TAC 115.167(1)(A) and 30 TAC 115.169(a) & (c)], which are shown in Table 2:

TABLE 2—TEXAS ADMINISTRATIVE CODE (TAC) CHAPTER 115 SUBCHAPTERS AFFECTED BY THIS RULEMAKING

Chapter 115 subchapter	Section
B General VOC Sources:	
Division 6 Batch Processes:	
Exemptions	115.167(1)(A).
Counties and Compliance Schedules	115.169(a) and (c).
E Solvent-Using Processes:	
Division 2 Surface Coating Processes:	
Exemptions	115.427(a)(3)(H).
Counties and Compliance Schedules	115.429(c).

To determine whether a specific facility in one of the above counties will be affected by one or more of the above revisions, see Texas' associated rule revisions included in the docket.

3. Why Is EPA Approving Texas' Regulation for Control of VOCs?

Section 182 of the Act requires that ozone nonattainment areas classified as moderate and above implement RACT on certain sources of VOCs and NO_X. In particular, States must adopt rules that implement RACT on sources covered by control techniques guidelines (CTGs) issued prior to the 1990 amendments to the Act, sources covered by CTGs issued after the 1990 amendments and major

sources of emissions not covered by a CTG.

On March 7, 1995, as part of our action approving VOC RACT requirements, we found that Texas had implemented VOC RACT in the BPA area for both (1) sources covered by a CTG issued prior to the 1990 amendments to the Act, and (2) major sources not covered by a CTG (44 FR 12438, March 7, 1995). Since that time, EPA has issued CTGs, and alternative control techniques (ACT) for additional source categories. As a result, EPA has approved further revisions as meeting VOC RACT for the BPA area, including the following: Aerospace Coatings are addressed in 66 FR 54688 (October 30, 2001); Batch Processes and Industrial Wastewater in 65 FR 79745 (December 20, 2000); Wood Furniture Coating Operations and Ship Building and Repair Operations in 64 FR 12759 (March 15, 1999); Plastic Parts Coatings, Reactor Processes and Distillation Operations Process in the SOCMI, and Volatile Organic Liquid Storage in 64 FR 3841 (January 26, 1999). While CTGs and ACTs were issued for a few other categories, there are no major sources in those categories in the BPA area. Texas submitted, and EPA approved, negative declarations on these CTG source categories in 61 FR 55894 (October 30, 1996). On May 15, 2001, EPA found that the BPA area had met the VOC RACT requirements for moderate 1-hour ozone nonattainment areas (66 FR 26914).

In 2004, BPA was reclassified from moderate to serious. As a serious area, the major source threshold dropped from 100 tpy to 50 tpy. On September 9, 2005, the TCEQ adopted revisions to the SIP for the BPA 1-hour ozone nonattainment area. The SIP revisions were submitted to EPA on October 15, 2005; two parts of these revisions are being approved in today's action. One part of these revisions that is being approved in this action are the State's revised rules that lower the exemption level for control of VOC emissions from 100 tpy to 50 tpy for shipbuilding and ship repair and batch processes, thus making the rules more stringent. This is consistent with VOC RACT requirements for serious 1-hour nonattainment areas. Our approval of the revised Texas regulations will make them Federally enforceable and the revised SIP will meet the serious area VOC RACT requirements for these source categories in the BPA area.

EPA has reviewed the revisions for consistency with the requirements of the Act and Federal regulations, and evaluated the analysis provided by Texas for determining whether the BPA area meets VOC RACT requirements for an area with a serious classification for the 1-hour ozone standard. The specific requirements and EPA's evaluation of these requirements are detailed in the TSD found in the electronic docket. Revisions to the Texas regulations for control of VOC (30 TAC Chapter 115, sections 115.167, 115.169, 115.427, and 115.429) are also included in the docket.

III. Reasonably Available Control Technology (RACT) for the 1-hr Ozone BPA Area

On March 30, 2004, EPA reclassified the BPA area as a serious nonattainment area for the 1-hour ozone standard and required the State to submit a revised SIP meeting the serious area 1-hour ozone requirements including RACT for VOC and NO_X emissions from major sources (69 FR 16483); this action became effective April 29, 2004.

Sections 172(c)(1) and 182 of the Act require areas that are classified as moderate or above for ozone nonattainment to adopt RACT requirements for sources that are subject to CTGs for VOC source categories issued by EPA and for ''major sources'' of VOCs and NO_X, which are ozone precursors. Specifically, section 182(b)(2) of the Act requires States to adopt RACT for all major sources of VOC in ozone nonattainment areas; and, section 182(f) requires the RACT provisions for major stationary sources of NO_X. Section 182(c) of the Act defines ''major source'' for serious areas as a source that has the potential to emit 50 tpy or more of NO_X. RACT is defined as the lowest emissions limitation that a particular source is capable of meeting by the application of control technology that is reasonably available considering technological and economic feasibility (44 FR 53762; September 17, 1979).

EPA published the 8-hour ozone designations and the Phase 1 Rule for implementing the 1997 8-hour ozone standard and the designations for the 8-hour ozone standard in the **Federal Register** (FR) on April 30, 2004 (69 FR 23858 and 69 FR 23951). The BPA area was designated nonattainment for this standard and classified as marginal, and included the following three counties: Hardin, Jefferson, and Orange (these three also constituted the 1-hour ozone nonattainment area). At the time of designation for the 1997 8-hour standard, BPA was a nonattainment area for the 1-hour ozone standard and had several outstanding 1-hour ozone obligations, including the area did not have approved serious area RACT requirements for VOC and NO_X emissions.

The Phase 1 Rule provided that 1-hour ozone nonattainment areas were required to adopt and implement ''applicable requirements'' according to the area's classification under the 1-hour ozone standard (*see* 40 CFR 51.905(a)(i)). The BPA area was classified as a serious nonattainment area at the time of the 8-hour designation and an outstanding ''applicable requirement'' for the BPA area is serious area RACT for VOC and NO_X. In the three counties which comprise the 1-hour ozone nonattainment area (Hardin, Jefferson and Orange), Texas previously adopted rules to address VOC and NO_X RACT requirements for all major sources at the moderate area major source emissions threshold of 100 tons per year (tpy) or greater. The reclassification of the BPA area from moderate to serious for the 1-hour ozone standard, on March 30, 2004 (69 FR 16483), required Texas to ensure that RACT was in place on all major sources of 50 tpy or greater of VOC and NO_X emissions.

EPA reviewed the SIP rules, the revised VOC rules being approved today, and the State's RACT demonstration to determine whether RACT for VOCs and NO_X has been adopted in the BPA area as required to meet 1-hour ozone standard requirements. EPA is finding that the RACT requirements for VOCs and NO_X in the BPA area meet the 1-hour ozone standard serious area requirements. RACT for VOCs and RACT for NO_X are discussed successively below.

1. VOC RACT

In the three counties which comprise the 1-hour ozone nonattainment area (Hardin, Jefferson and Orange), Texas previously adopted rules to address RACT requirements for all VOC source categories covered by EPA CTGs, and to address VOC major sources not covered by CTGs at the moderate area major source emissions threshold of 100 tons per year (tpy). A CTG provides information on the available controls for a VOC source category and provides a ''presumptive norm'' for VOC RACT. EPA approved these rules as meeting VOC RACT for a moderate 1-hour ozone nonattainment area in a series of actions.

On March 7, 1995, as part of our action approving VOC requirements, EPA found that Texas had implemented RACT in the BPA area for both (1) sources covered by a CTG issued prior to the 1990 amendments to the Act, and (2) major sources not covered by a CTG (60 FR 12438). On October 30, 1996, EPA approved SIP Revisions Regarding Negative Declarations for Source Categories Subject to RACT for Louisiana and Texas (61 FR 55984). For

the Beaumont/Port Arthur region, negative declarations were approved for the following categories: clean-up solvents, aerospace coatings, shipbuilding and repair, wood furniture, plastic part coatings—business machines, plastic part coatings—others, autobody refinishing, and offset lithography. On May 22, 1997, EPA granted limited approval of VOC control measures for Texas (62 FR 27964). This action finalized the proposed limited approval of control measures that were included as part of an earlier proposal related to a 15 Percent Rate of Progress Plan (61 FR 2751, Jan. 29, 1996). We converted this limited approval into a full approval on January 26, 1999 (64 FR 3841).

Since that time, EPA has approved further revisions as meeting RACT for the BPA area, including the following: Aerospace Coatings are addressed in 66 FR 54688 (October 30, 2001); Batch Processes and Industrial Wastewater in 65 FR 79745 (December 20, 2000); Wood Furniture Coating Operations and Ship Building and Repair Operations in 64 FR 12759 (March 15, 1999); Plastic Parts Coatings, Reactor Processes and Distillation Operations Process in the SOCMI, and Volatile Organic Liquid Storage in 64 FR 3841 (January 26, 1999). While CTGs and ACTs were issued for a few other categories, there are no major sources in those categories in the BPA area. Texas submitted, and EPA approved, negative declarations on these categories in 61 FR 55894 (October 30, 1996). On May 15, 2001, EPA found that the BPA area had met VOC RACT requirements for moderate 1-hour ozone nonattainment areas (66 FR 26914). EPA approved additional control measures which enhanced the Texas VOC RACT SIP in an action on February 27, 2008 (73 FR 10383); among other things, this action included requirements to control VOC emissions from industrial wastewater systems in BPA.

Texas submitted two SIP revisions addressing the serious area RACT requirements (one lowering the limit of two VOC rules from 100 to 50 tpy, and another addressing serious VOC and NO_X RACT overall), and we reviewed both SIP submissions with respect to the 1-hour ozone serious area RACT requirements for the BPA 1-hour ozone nonattainment area.

EPA has evaluated the analysis provided by Texas for determining whether the BPA area meets VOC RACT requirements for an area with a serious classification. The specific requirements to meet RACT and EPA's evaluation of these requirements are detailed in the TSD, which is available in the docket supporting this action: Docket No. EPA–R06–OAR–2005–TX–0005. Texas' 30 TAC Chapter 115 revisions are included in the docket. Based upon the TCEQ's review and our evaluation, we are finding that the BPA area meets the serious area RACT requirements for VOCs under the 1-hour ozone standard.

2. NO_X RACT

The Act's NO_X RACT requirements are described by EPA in the ''NO_X Supplement'' document titled, ''State Implementation Plans; Nitrogen Oxides Supplement to the General Preamble; Clean Air Act Amendments of 1990 Implementation of Title I; Proposed Rule,'' published November 25, 1992 (57 FR 55620). EPA also discussed what it viewed as presumptive NO_X RACT, concerning emission limits for certain categories of utility boilers, using a 30-day rolling average basis. For those source categories which EPA addressed in the NO_X Supplement and their presumptive RACT, States were required to adopt rules that either met EPA's presumptions or were at least as stringent, to meet the NO_X RACT requirements.

In setting the NO_X RACT standards, the States may consider the total cost, total emission reductions, and cost effectiveness of controls needed to achieve the emission limits or equipment standards. Generally, the total NO_X reductions achieved and the cost effectiveness of NO_X controls fall within the ranges articulated in EPA's Office of Air Quality Planning policy memoranda, such as the March 16, 1994 memorandum entitled, ''Cost-Effective Nitrogen Oxides (NO_X) Reasonably Available Control Technology (RACT)'', and the January 10, 1995 memorandum entitled, ''De Minimis Values For NO_X RACT.'' For example, the March 16, 1994 memorandum recommends that a NO_X reduction of 30% to 50%, corresponding to a cost-effectiveness range of $160 to $1300, be considered in the setting of NO_X RACT standards.

For the Texas SIP, EPA initially approved revisions to the SIP's NO_X rules, found at 30 TAC Chapter 117, into the Texas SIP as adopted by the State on May 11, 1993, at 65 FR 11468 (March 3, 2000). Among other things, EPA approved the revised NO_X rules for the BPA area as meeting NO_X RACT, in that rulemaking action. *See* Table II of the 65 FR 11468 for a detailed summary of NO_X emissions limits. By approving the revised NO_X rules as RACT in that rulemaking action we also made the finding that the BPA area met the moderate area NO_X RACT requirements.

On September 1, 2000 at 65 FR 53172, EPA approved revisions to the Texas SIP NO_X rules at 30 TAC Chapter 117, into the Texas SIP. EPA approved the rules as meeting RACT for the BPA area, among other things, in that rulemaking action. We evaluated the NO_X emission limitations for the BPA area and found them to be reasonably available, and technologically and economically feasible. For more information, see Tables I and II of 65 FR 53172 for a detailed summary of those NO_X emissions limits, as well as pages 15–18 of the TSD prepared in conjunction with this rulemaking.

On October 26, 2000, at 65 FR 64148, the EPA approved further revisions to the Texas SIP NO_X rules at 30 TAC Chapter 117, into the Texas SIP. In that SIP revision action by EPA, the NO_X revised rules entitled, ''Emissions Specifications for Attainment Demonstration (ESAD)'' were considered at that time to be more stringent than moderate area NO_X RACT. Tables III and IV of 65 FR 64148 contain summaries of those NO_X emissions limits. We did not make a NO_X RACT determination at that time.

The State's NO_X RACT demonstration submitted by the State on October 15, 2005, to show that serious NO_X RACT is in place in the BPA area, relies upon all of the above SIP-approved NO_X rules. Today, we are finding that the revised NO_X rules approved into the Texas SIP on October 26, 2000, meet NO_X RACT.

We are finding that the Texas SIP rules in 30 TAC Chapter 117, Control of Air Pollution from Nitrogen Compounds for major sources, located in the three Texas Counties of Jefferson, Hardin, and Orange, apply to all sources having a potential to emit of 50 tpy or more of NO_X, and meet the NO_X RACT requirements for a serious ozone nonattainment area under the 1-hour ozone standard. We have examined the NO_X control requirements of the Texas SIP rules at 30 TAC Chapter 117 for the affected sources within these three Texas Counties, as approved into the Texas SIP, and have determined that the rules apply to serious area major source thresholds and that the level of control for these affected sources in the BPA area meets the NO_X RACT requirements of the Act and is consistent with our guidance documents. For more information, see the TSD document prepared in conjunction with today's rulemaking action, as well as 65 FR 11468, 65 FR 53172, and 65 FR 64148. The TSD is made available in docket No. EPA–R06–OAR–2005–TX–0005. You can find the NO_X RACT-related documents at *http://www.epa.gov/ttn/naaqs/ozone/ctg_act/index.htm* (URL dating October 9, 2008).

The existing NO_X rules in the Texas SIP already apply to a serious area's source threshold and we either have found or are today finding that they meet NO_X RACT. Based upon the TCEQ's review and our evaluation, we are finding that the BPA area meets serious area RACT requirements for NO_X under the 1-hour ozone standard.

IV. What Is the Process for EPA To Approve This SIP Revision?

The EPA is publishing this rule without prior proposal because the Agency views this as a noncontroversial amendment and anticipates no adverse comments. However, in the proposed rules section of this **Federal Register** publication, EPA is publishing a separate document that will serve as the proposal to approve the SIP revision should adverse comments be filed. This action will be effective *September 8, 2009* without further notice, unless EPA receives relevant adverse comments by August 10, 2009.

If EPA receives such comment, EPA will publish a timely withdrawal of the direct final rule in the **Federal Register** informing the public that this rule will not take effect. All public comments received will then be addressed in a subsequent final rule based on the proposed rule. The EPA will not institute a second comment period. Parties interested in commenting should do so at this time. If no such comments are received, the public is advised that this rule will be effective on *September 8, 2009* and no further action will be taken on the proposed rule. Please note that if EPA receives adverse comment on an amendment, paragraph, or section of this rule and if that provision may be severed from the remainder of the rule, EPA may adopt as final those provisions of the rule that are not the subject of an adverse comment.

V. Final Action

EPA is approving Texas' Chapter 115 Control of Air Pollution from Volatile Organic Compounds amendments to sections 115.167, 115.169, 115.427, and 115.429 which extend requirements for control of VOC emissions to sources with the potential to emit 50 tpy or more, and incorporating this regulation into the Texas SIP. In conjunction with approving these VOC amendments into the Texas SIP, EPA finds they meet serious area VOC RACT. EPA also finds that the NO_X rules approved into the Texas SIP on October 26, 2000, at 65 FR 64148, are RACT. Further, EPA is also finding, based upon our review and evaluation of the State's demonstration, that the BPA area meets the serious area VOC and NO_X RACT requirements for the 1-hour ozone standard.

VI. Statutory and Executive Order Reviews

Under the Clean Air Act, the Administrator is required to approve a SIP submission that complies with the provisions of the Act and applicable Federal regulations. 42 U.S.C. 7410(k); 40 CFR 52.02(a). Thus, in reviewing SIP submissions, EPA's role is to approve State choices, provided that they meet the criteria of the Clean Air Act. Accordingly, this action merely approves State law as meeting Federal requirements and does not impose additional requirements beyond those imposed by State law. For that reason, this action:

- Is not a ''significant regulatory action'' subject to review by the Office of Management and Budget under Executive Order 12866 (58 FR 51735, October 4, 1993);
- Does not impose an information collection burden under the provisions of the Paperwork Reduction Act (44 U.S.C. 3501 *et seq.*);
- Is certified as not having a significant economic impact on a substantial number of small entities under the Regulatory Flexibility Act (5 U.S.C. 601 *et seq.*);
- Does not contain any unfunded mandate or significantly or uniquely affect small governments, as described in the Unfunded Mandates Reform Act of 1995 (Pub. L. 104–4);
- Does not have Federalism implications as specified in Executive Order 13132 (64 FR 43255, August 10, 1999);
- Is not an economically significant regulatory action based on health or safety risks subject to Executive Order 13045 (62 FR 19885, April 23, 1997);
- Is not a significant regulatory action subject to Executive Order 13211 (66 FR 28355, May 22, 2001);
- Is not subject to requirements of Section 12(d) of the National Technology Transfer and Advancement Act of 1995 (15 U.S.C. 272 note) because application of those requirements would be inconsistent with the Clean Air Act;
- Does not provide EPA with the discretionary authority to address, as appropriate, disproportionate human health or environmental effects, using practicable and legally permissible methods, under Executive Order 12898 (59 FR 7629, February 16, 1994); and
- Does not have Tribal implications as specified by Executive Order 13175 (65 FR 67249, November 9, 2000), because the SIP is not approved to apply in Indian country located in the State, and EPA notes that it will not impose substantial direct costs on Tribal governments or preempt Tribal law.

The Congressional Review Act, 5 U.S.C. 801 *et seq.,* as added by the Small Business Regulatory Enforcement Fairness Act of 1996, generally provides that before a rule may take effect, the agency promulgating the rule must submit a rule report, which includes a copy of the rule, to each House of the Congress and to the Comptroller General of the United States. EPA will submit a report containing this action and other required information to the U.S. Senate, the U.S. House of Representatives, and the Comptroller General of the United States prior to publication of the rule in the **Federal Register**. A major rule cannot take effect until 60 days after it is published in the **Federal Register**. This action is not a ''major rule'' as defined by 5 U.S.C. 804(2).

Under section 307(b)(1) of the Clean Air Act, petitions for judicial review of this action must be filed in the United States Court of Appeals for the appropriate circuit by September 8, 2009. Filing a petition for reconsideration by the Administrator of this final rule does not affect the finality of this action for the purposes of judicial review nor does it extend the time within which a petition for judicial review may be filed, and shall not postpone the effectiveness of such rule or action. This action may not be challenged later in proceedings to enforce its requirements. (*See* section 307(b)(2).)

List of Subjects in 40 CFR Part 52

Environmental protection, Air pollution control, Incorporation by reference, Intergovernmental relations, Ozone, Nitrogen dioxides, Reporting and recordkeeping requirements, Volatile organic compounds.

Dated: June 29, 2009.

Miguel I. Flores,

Acting Regional Administrator, Region 6.

■ 40 CFR part 52 is amended as follows:

PART 52—[AMENDED]

■ 1. The authority citation for part 52 continues to read as follows:

Authority: 42 U.S.C. 7401 *et seq.*

Subpart SS—Texas

■ 2. Section 52.2270 is amended as follows:

■ a. The table in paragraph (c) entitled ''EPA Approved Regulations in the Texas SIP'' is amended under ''Chapter 115 (Reg 5)—Control of Air Pollution From Volatile Organic Compounds'' by revising the entries for Sections 115.167, 115.169, 115.427, and 115.429.

■ b. The second table in paragraph (e) entitled ''EPA-Approved Nonregulatory Provisions and Quasi-Regulatory Measures in the Texas SIP'' is amended by adding at the end a new entry for ''VOC and NO_X RACT demonstration for the 1-hour ozone NAAQS'' for the Beaumont/Port Arthur Area.

The revisions and addition read as follows:

§ 52.2270 Identification of plan.

* * * * *

(c) * * *

EPA-APPROVED REGULATIONS IN THE TEXAS SIP

State citation	Title/subject	State approval/ submittal date	EPA approval date	Explanation
*	*	*	*	*
Chapter 115 (Reg 5)—Control of Air Pollution from Volatile Organic Compounds				
*	*	*	*	*
Subchapter B—General Volatile Organic Compound Sources				
*	*	*	*	*
Division 6: Batch Processes				
*	*	*	*	*
Section 115.167	Exemptions	9/28/2005	7/10/2009 [Insert FR page number where document begins].	
Section 115.169	Counties and Compliance Schedules	9/28/2005	7/10/2009 [Insert FR page number where document begins].	
*	*	*	*	*
Subchapter E—Solvent-Using Processes				
*	*	*	*	*
Division 2: Surface Coating Processes				
*	*	*	*	*
Section 115.427	Exemptions	9/28/2005	7/10/2009 [Insert FR page number where document begins].	
Section 115.429	Counties and Compliance Schedules	9/28/2005	7/10/2009 [Insert FR page number where document begins].	
*	*	*	*	*

(e) * * *

* * * * *

EPA-APPROVED NONREGULATORY PROVISIONS AND QUASI-REGULATORY MEASURES IN THE TEXAS SIP

Name of SIP provision	Applicable geographic or non-attainment area	State submittal/effective date	EPA approval date	Comments
*	*	*	*	*
VOC and NO_X RACT demonstration for the 1-hour ozone NAAQS.	Beaumont/Port Arthur Area: Hardin, Jefferson, and Orange Counties.	9/28/2005	7/10/2009 [Insert FR page number where document begins].	

[FR Doc. E9–16270 Filed 7–9–09; 8:45 am]

BILLING CODE 6560–50–P

ENVIRONMENTAL PROTECTION AGENCY

40 CFR Part 180

[EPA–HQ–OPP–2008–0589; FRL–8421–3]

Buprofezin; Pesticide Tolerances

AGENCY: Environmental Protection Agency (EPA).

ACTION: Final rule.

SUMMARY: This regulation establishes tolerances for the residues of buprofezin in or on Brassica, head and stem, subgroup 5A; coffee, green bean; and pomegranate. Interregional Research Project Number 4 (IR–4) requested the tolerances for residues in or on coffee and pomegranates under the Federal Food, Drug, and Cosmetic Act (FFDCA). Nichino America, Inc., requested the tolerances for residues in or on Brassica, head and stem, subgroup 5A under the Federal Food, Drug, and Cosmetic Act (FFDCA).

DATES: This regulation is effective July 10, 2009. Objections and requests for hearings must be received on or before September 8, 2009, and must be filed in accordance with the instructions provided in 40 CFR part 178 (see also Unit I.C. of the **SUPPLEMENTARY INFORMATION**).

ADDRESSES: EPA has established a docket for this action under docket identification (ID) number EPA–HQ–OPP–2008–0589. All documents in the docket are listed in the docket index available at *http://www.regulations.gov*. Although listed in the index, some information is not publicly available, e.g., Confidential Business Information (CBI) or other information whose disclosure is restricted by statute. Certain other material, such as copyrighted material, is not placed on the Internet and will be publicly available only in hard copy form. Publicly available docket materials are available in the electronic docket at *http://www.regulations.gov*, or, if only available in hard copy, at the OPP Regulatory Public Docket in Rm. S–4400, One Potomac Yard (South Bldg.), 2777 S. Crystal Dr., Arlington, VA. The Docket Facility is open from 8:30 a.m. to 4 p.m., Monday through Friday, excluding legal holidays. The Docket Facility telephone number is (703) 305–5805.

FOR FURTHER INFORMATION CONTACT: Samantha Hulkower, Registration Division (7505P), Office of Pesticide Programs, Environmental Protection Agency, 1200 Pennsylvania Ave., NW., Washington, DC 20460–0001; telephone number: (703) 603–0683; e-mail address: *hulkower.samantha@epa.gov*.

SUPPLEMENTARY INFORMATION:

I. General Information

A. Does this Action Apply to Me?

You may be potentially affected by this action if you are an agricultural producer, food manufacturer, or pesticide manufacturer. Potentially affected entities may include, but are not limited to those engaged in the following activities:

- Crop production (NAICS code 111).
- Animal production (NAICS code 112).
- Food manufacturing (NAICS code 311).
- Pesticide manufacturing (NAICS code 32532).

This listing is not intended to be exhaustive, but rather to provide a guide for readers regarding entities likely to be affected by this action. Other types of entities not listed in this unit could also be affected. The North American Industrial Classification System (NAICS) codes have been provided to assist you and others in determining whether this action might apply to certain entities. If you have any questions regarding the applicability of this action to a particular entity, consult the person listed under **FOR FURTHER INFORMATION CONTACT**.

B. How Can I Access Electronic Copies of this Document?

In addition to accessing electronically available documents at *http://www.regulations.gov*, you may access this **Federal Register** document electronically through the EPA Internet under the "**Federal Register**" listings at *http://www.epa.gov/fedrgstr*. You may also access a frequently updated electronic version of EPA's tolerance regulations at 40 CFR part 180 through the Government Printing Office's e-CFR cite at *http://www.gpoaccess.gov/ecfr*.

C. Can I File an Objection or Hearing Request?

Under section 408(g) of FFDCA, 21 U.S.C. 346a, any person may file an objection to any aspect of this regulation and may also request a hearing on those objections. You must file your objection or request a hearing on this regulation in accordance with the instructions provided in 40 CFR part 178. To ensure proper receipt by EPA, you must identify docket ID number EPA–HQ–OPP–2008–0589 in the subject line on the first page of your submission. All requests must be in writing, and must be mailed or delivered to the Hearing Clerk as required by 40 CFR part 178 on or before September 8, 2009.

In addition to filing an objection or hearing request with the Hearing Clerk as described in 40 CFR part 178, please submit a copy of the filing that does not contain any CBI for inclusion in the public docket that is described in **ADDRESSES**. Information not marked confidential pursuant to 40 CFR part 2 may be disclosed publicly by EPA without prior notice. Submit this copy, identified by docket ID number EPA–HQ–OPP–2008–0589, by one of the following methods:

- *Federal eRulemaking Portal*: *http://www.regulations.gov*. Follow the on-line instructions for submitting comments.
- *Mail*: Office of Pesticide Programs (OPP) Regulatory Public Docket (7502P), Environmental Protection Agency, 1200 Pennsylvania Ave., NW., Washington, DC 20460–0001.
- *Delivery*: OPP Regulatory Public Docket (7502P), Environmental Protection Agency, Rm. S–4400, One Potomac Yard (South Bldg.), 2777 S. Crystal Dr., Arlington, VA. Deliveries are only accepted during the Docket Facility's normal hours of operation (8:30 a.m. to 4 p.m., Monday through Friday, excluding legal holidays). Special arrangements should be made for deliveries of boxed information. The Docket Facility telephone number is (703) 305–5805.

II. Petition for Tolerance

In the **Federal Register** of June 4, 2008 (73 FR 31862–31864) (FRL–8365–3), EPA issued a notice pursuant to section 408(d)(3) of FFDCA, 21 U.S.C. 346a(d)(3), announcing the filing of a pesticide petition (PP 8F7343) by Nichino America, Inc., 4550 New Linden Hill Rd., Suite 501, Wilmington, Delaware 19808. The petition requested that 40 CFR 180.511 be amended by establishing tolerances for residues of the insecticide buprofezin, 2-[(1,1-dimethylethyl)imino]tetrahydro-3(1-methylethyl)-5-phenyl-4H-1,3,5-thiadiazin-4-one, in or on Brassica, head and stem, subgroup 5A at 7.0 parts per million (ppm). In the **Federal Register** of August 13, 2008 (73 FR 47184) (FRL–8376–8), EPA issued a notice pursuant to section 408(d)(3) of FFDCA, 21 U.S.C. 346a(d)(3), announcing the filing of a pesticide petition (PP 8E7386) by Interregional Research Project Number 4 (IR–4), 500 College Road East, Suite 201 W, Princeton, NJ 08540. The petition requested that 40 CFR 180.511 be amended by establishing tolerances for residues of the insecticide buprofezin, 2-[(1,1-dimethylethyl)imino]tetrahydro-3(1-methylethyl)-5-phenyl-4H-1,3,5-thiadiazin-4-one, in or on coffee at 0.35 ppm and in or on pomegranate at 1.9 ppm. Those notices referenced a

summary of the petition prepared by Nichino America, Inc., the registrant, which is available to the public in the docket, *http://www.regulations.gov*. There were no comments received in response to the notices of filing.

Based upon review of the data supporting the petition, EPA has revised the proposed tolerance levels for buprofezin in or on Brassica, head and stem, subgroup 5A. The reason for these changes are explained in Unit IV.D.

III. Aggregate Risk Assessment and Determination of Safety

Section 408(b)(2)(A)(i) of FFDCA allows EPA to establish a tolerance (the legal limit for a pesticide chemical residue in or on a food) only if EPA determines that the tolerance is ''safe.'' Section 408(b)(2)(A)(ii) of FFDCA defines ''safe'' to mean that ''there is a reasonable certainty that no harm will result from aggregate exposure to the pesticide chemical residue, including all anticipated dietary exposures and all other exposures for which there is reliable information.'' This includes exposure through drinking water and in residential settings, but does not include occupational exposure. Section 408(b)(2)(C) of FFDCA requires EPA to give special consideration to exposure of infants and children to the pesticide chemical residue in establishing a tolerance and to ''ensure that there is a reasonable certainty that no harm will result to infants and children from aggregate exposure to the pesticide chemical residue. . . .''

Consistent with section 408(b)(2)(D) of FFDCA, and the factors specified in section 408(b)(2)(D) of FFDCA, EPA has reviewed the available scientific data and other relevant information in support of this action. EPA has sufficient data to assess the hazards of and to make a determination on aggregate exposure for the petitioned-for tolerances for residues of buprofezin, 2-[(1,1-dimethylethyl)imino]tetrahydro-3(1-methylethyl)-5-phenyl-4H-1,3,5-thiadiazin-4-one, in or on Brassica, head and stem, subgroup 5A at 12.0 ppm, in or on coffee, green bean at 0.35 ppm, and in or on pomegranate at 1.9 ppm. EPA's assessment of exposures and risks associated with establishing tolerances follows.

A. Toxicological Profile

EPA has evaluated the available toxicity data and considered its validity, completeness, and reliability as well as the relationship of the results of the studies to human risk. EPA has also considered available information concerning the variability of the sensitivities of major identifiable subgroups of consumers, including infants and children.

Buprofezin has low acute toxicity via the oral, dermal and inhalation routes of exposure. It is not an eye or skin irritant; nor is it a dermal sensitizer. In subchronic toxicity studies, the primary effects of concern in the rat were increased microscopic lesions in male and female liver and thyroid, increased liver weights in males and females, and increased thyroid weight in males. In chronic studies in the rat, an increased incidence of follicular cell hyperplasia and hypertrophy in the thyroid of males was reported. Increased relative liver weights were reported in female dogs. Buprofezin was not carcinogenic to male and female rats. In the mouse, increased absolute liver weights in males and females, along with an increased incidence of hepatocellular adenomas and hepatocellular adenomas plus carcinomas in females were reported. Based on the increased incidence of liver tumors in female mice only, no evidence of carcinogenicity in rats, and no evidence of genotoxicity in submitted guideline studies using *in vitro* and *in vivo* genotoxicity assays, EPA classified buprofezin as having suggestive evidence of carcinogenicity, but not sufficient to assess human carcinogenic potential.

There is no evidence that buprofezin results in increased susceptibility of *in utero* rats or rabbits in the prenatal developmental studies or in young rats in the 2-generation reproduction study. Toxicity in the offspring was found at dose levels that were also toxic to the parent(s), and the effects observed in the offspring were not more severe, qualitatively, than the effects observed in the parent(s).

Specific information on the studies received and the nature of the adverse effects caused by buprofezin as well as the no-observed-adverse-effect-level (NOAEL) and the lowest-observed-adverse-effect-level (LOAEL) from the toxicity studies can be found at *http://www.regulations.gov* in the document *Buprofezin Revised Human Health Risk Assessment for Proposed Use of Buprofezin on Coffee, Pomegranate, and Brassica Head and Stem Crops (Subgroup 5A)*. The referenced document is available in the docket established by this action, which is described under **ADDRESSES**, and is identified as document ID number EPA–HQ–OPP–2008–0589–0005 in that docket.

B. Toxicological Endpoints

For hazards that have a threshold below which there is no appreciable risk, a toxicological point of departure (POD) is identified as the basis for derivation of reference values for risk assessment. The POD may be defined as the highest dose at which no adverse effects are observed (the NOAEL) in the toxicology study identified as appropriate for use in risk assessment. However, if a NOAEL cannot be determined, the lowest dose at which adverse effects of concern are identified (the LOAEL) or a Benchmark Dose (BMD) approach is sometimes used for risk assessment. Uncertainty/safety factors (UFs) are used in conjunction with the POD to take into account uncertainties inherent in the extrapolation from laboratory animal data to humans and in the variations in sensitivity among members of the human population as well as other unknowns. Safety is assessed for acute and chronic dietary risks by comparing aggregate food and water exposure to the pesticide to the acute population adjusted dose (aPAD) and chronic population adjusted dose (cPAD). The aPAD and cPAD are calculated by dividing the POD by all applicable UFs. Aggregate short-term, intermediate-term, and chronic-term risks are evaluated by comparing food, water, and residential exposure to the POD to ensure that the margin of exposure (MOE) called for by the product of all applicable UFs is not exceeded. This latter value is referred to as the Level of Concern (LOC).

For non-threshold risks, the Agency assumes that any amount of exposure will lead to some degree of risk. Thus, the Agency estimates risk in terms of the probability of an occurrence of the adverse effect greater than that expected in a lifetime. For more information on the general principles EPA uses in risk characterization and a complete description of the risk assessment process, see *http://www.epa.gov/pesticides/factsheets/riskassess.htm*.

A summary of the toxicological endpoints for buprofezin used for human risk assessment can be found at *http://www.regulations.gov* in document *Buprofezin Revised Human Health Risk Assessment for Proposed Use of Buprofezin on Coffee, Pomegranate, and Brassica Head and Stem Crops (Subgroup 5A)* page 18 in docket ID number EPA–HQ–OPP–2008–0589.

C. Exposure Assessment

1. *Dietary exposure from food and feed uses*. In evaluating dietary exposure to buprofezin, EPA considered exposure under the petitioned-for tolerances as well as all existing buprofezin tolerances in (40 CFR 180.511). EPA assessed dietary exposures from buprofezin in food as follows:

i. *Acute exposure*. Quantitative acute dietary exposure and risk assessments are performed for a food-use pesticide, if a toxicological study has indicated the possibility of an effect of concern occurring as a result of a 1–day or single exposure. Such effects were identified in the toxicological studies for buprofezin for the population subgroup females 13–50 years old; no such effects were identified for the general population or other population subgroups.

In estimating acute dietary exposure of females 13–50 years old, EPA used food consumption information from the United States Department of Agriculture (USDA) 1994–1996 and 1998 Nationwide Continuing Surveys of Food Intake by Individuals (CSFII). As to residue levels in food, EPA assumed that residues are present at tolerance levels in all commodities except meat and milk. Anticipated residues were calculated for meat and milk commodities as follows: Tolerances for meat and milk are established at the analytical method limit of quantitation (LOQ). For milk, the residues of concern are buprofezin and an additional metabolite, BF23. Combined residues were included in the dietary exposure assessment, as appropriate, based on amounts detected in the dietary feeding study. Since residues were only detected in milk samples collected from cows fed feed containing 9.3x the maximum theoretical dietary burden (MTDB) for dairy cattle, residues in milk were normalized to 1x the MTDB in the acute dietary exposure assessment. For ruminant tissues, the residues of concern are buprofezin and an additional metabolite, BF2. Combined residues were included in the dietary exposure assessment as appropriate, based on amounts detected in the dietary feeding study. Since residues were only detected in tissue samples collected from cows fed feed containing 6.8x the MTDB, residues in meat, kidney, liver, fat, and meat byproducts were normalized to 1x the MTDB in the acute dietary exposure assessment. For fruits and crops with an extended interval from initial application to harvest (>50 day), additional metabolites of toxicological concern (BF4 and its conjugates, and BF12) were included in the dietary exposure assessment, as appropriate, based on the ratio of metabolite to parent found in plant metabolism studies. No adjustment was made to account for the percent of crops treated with buprofezin in the acute dietary exposure assessment. 100 percent crop treated (PCT) was assumed for all commodities.

ii. *Chronic exposure*. In conducting the chronic dietary exposure assessment EPA used the food consumption data from the United States Departmemt of Agriculture (USDA) 1994–1996 and 1998 CSFII. As to residue levels in food, EPA conducted a refined dietary analysis. The chronic analysis assumed average field trial, average USDA Pesticide Data Program (PDP), or tolerance-level crop residues, based on the available data. The chronic analysis employed the same anticipated residue estimates for meat and milk as those employed in the acute analysis. As in the acute analysis, for fruits and crops with an extended interval from initial application to harvest (>50 day), additional metabolites of toxicological concern (BF4 and its conjugates, and BF12) were included in the dietary exposure assessment, as appropriate, based on the ratio of metabolite to parent found in plant metabolism studies. The chronic analysis used available screening-level PCT estimates or projected PCT estimates for some commodities. If no PCT data were available, 100 PCT was assumed. Default processing factors were assumed for all commodities excluding tomato paste and puree. The tomato paste and puree processing factors were reduced to 1.2x based on the results of a tomato processing study.

iii. *Cancer*. EPA has classified buprofezin as having suggestive evidence based on the occurrence of liver tumors in female mice. Since the increased incidence of liver tumors occurred in female mice only and there was no evidence of carcinogenicity in rats or evidence of genotoxicity in submitted guideline studies using *in vitro* and *in vivo* genotoxicity assays, EPA regards the carcinogenic potential of buprofezin as very low. Therefore, an exposure assessment for evaluating cancer risk was not conducted.

iv. *Anticipated residue and PCT information*. Section 408(b)(2)(E) of FFDCA authorizes EPA to use available data and information on the anticipated residue levels of pesticide residues in food and the actual levels of pesticide residues that have been measured in food. If EPA relies on such information, EPA must require pursuant to FFDCA section 408(f)(1) that data be provided 5 years after the tolerance is established, modified, or left in effect, demonstrating that the levels in food are not above the levels anticipated. For the present action, EPA will issue such Data Call-Ins as are required by FFDCA section 408(b)(2)(E) and authorized under FFDCA section 408(f)(1). Data will be required to be submitted no later than 5 years from the date of issuance of these tolerances.

Section 408(b)(2)(F) of FFDCA states that the Agency may use data on the actual percent of food treated for assessing chronic dietary risk only if:

- Condition a: The data used are reliable and provide a valid basis to show what percentage of the food derived from such crop is likely to contain the pesticide residue.
- Condition b: The exposure estimate does not underestimate exposure for any significant subpopulation group.
- Condition c: Data are available on pesticide use and food consumption in a particular area, the exposure estimate does not understate exposure for the population in such area.

In addition, the Agency must provide for periodic evaluation of any estimates used. To provide for the periodic evaluation of the estimate of PCT as required by FFDCA section 408(b)(2)(F), EPA may require registrants to submit data on PCT.

The Agency used PCT information as follows:

PCT estimates for existing uses: Almond 1%; cantaloupe 5%; cotton 1%; grapefruit juice 1%; grapefruit 1%; orange juice 1%; other citrus 2.5%; honeydew 2.5%; pear 15%; pistachio 1%; pumpkin 10%; squash 10%; and watermelon 2.5%.

In most cases, EPA uses available data from USDA National Agricultural Statistics Service (NASS), proprietary market surveys, and the National Pesticide Use Database for the chemical/crop combination for the most recent 6 years. EPA uses an average PCT for chronic dietary risk analysis. The average PCT figure for each existing use is derived by combining available public and private market survey data for that use, averaging across all observations, and rounding to the nearest 5%, except for those situations in which the average PCT is less than one. In those cases, 1% is used as the average PCT and 2.5% is used as the maximum PCT. EPA uses a maximum PCT for acute dietary risk analysis. The maximum PCT figure is the highest observed maximum value reported within the recent 6 years of available public and private market survey data for the existing use and rounded up to the nearest multiple of 5%.

The Agency used projected percent crop treated (PPCT) information as follows:

EPA used PPCT estimates for the following commodities: Apple 5%; peach 13%; apricot 51%; nectarine 60%; cherry 72%; plum 37%; grapes 15%; broccoli 55%; cabbage 40%; kohlrabi 5%; Chinese broccoli 55%;

cauliflower 48%; cabbage 40%; Brussels sprouts 61%; mustard 13%; celery 18%; head lettuce 67%; lettuce leaf 63%; spinach 30%; strawberry 39%; tomato (fresh) 42%; and tomato (processing) 25%.

EPA estimates PPCT for a new pesticide use by assuming that the PCT during the pesticide's initial five years of use on a specific use site will not exceed the average PCT of the market leader (i.e., the one pesticide with the greatest PCT) on that site over the three most recent surveys. Comparisons are only made among the chemicals of the same pesticide type (i.e., the leading insecticide on the use site is selected for comparison with the new insecticide). The PCT values included in the averages may be for the same pesticide or for different pesticides, since the same or different pesticides may dominate for each year selected. Typically, EPA uses USDA/NASS as the primary source for PCT data. When a specific use site is not surveyed by USDA/NASS, EPA uses other sources including proprietary data and calculates the PPCT.

This estimated PPCT, based on the average PCT of the market leader, is appropriate for use in chronic dietary risk assessment. The method of estimating a PPCT for a new use of a registered pesticide or a new pesticide produces a high-end estimate that is unlikely, in most cases, to be exceeded during the initial five years of actual use. The predominant factors that bear on whether the estimated PPCT could be exceeded are whether a new pesticide use or new pesticide controls a broader spectrum of pests than the dominant pesticide; whether there are concerns that increasing pest pressure may intensify the use of alternate pesticides; and/or whether the new pesticide has a shorter pre-harvest or re-entry interval than alternative insecticides. Based on all information currently available, EPA concludes that it is unlikely that actual PCT for buprofezin will exceed the PPCT during the next five years. A discussion of the factors considered in making this determination can be found in the documents *Update of PPCT Values Provided Previously for Use of Buprofezin on Grapes, Apricots, Nectarines, Sweet and Tart Cherries, Plums, Apples and Peaches (December 5, 2008)*; *PPCT for the Insecticide Buprofezin on five crops: Celery, Lettuce, Spinach, Strawberries, and Tomatoes (January 9, 2008)*; *PPCT Values for Buprofezin Use on Six New Crops: Broccoli, Cabbage, Cauliflower, Brussels sprout, Kohlrabi, and Mustard (December 5, 2008)*; and in Attachment #2 to the document *Buprofezin - Acute and Chronic Dietary and Drinking Water Exposure and Risk Assessments (January 14, 2009)*. The referenced documents are available at *www.regulations.gov* in docket ID number EPA–HQ–OPP–2008–0589.

The Agency believes that the three conditions discussed in Unit III.C.1.iv. have been met. With respect to Condition a, PCT estimates are derived from Federal and private market survey data, which are reliable and have a valid basis. The Agency is reasonably certain that the percentage of the food treated is not likely to be an underestimation. As to Conditions b and c, regional consumption information and consumption information for significant subpopulations is taken into account through EPA's computer-based model for evaluating the exposure of significant subpopulations including several regional groups. Use of this consumption information in EPA's risk assessment process ensures that EPA's exposure estimate does not understate exposure for any significant subpopulation group and allows the Agency to be reasonably certain that no regional population is exposed to residue levels higher than those estimated by the Agency. Other than the data available through national food consumption surveys, EPA does not have available reliable information on the regional consumption of food to which buprofezin may be applied in a particular area.

2. *Dietary exposure from drinking water*. The Agency used screening level water exposure models in the dietary exposure analysis and risk assessment for buprofezin in drinking water. These simulation models take into account data on the physical, chemical, and fate/transport characteristics of buprofezin. Further information regarding EPA drinking water models used in pesticide exposure assessment can be found at *http://www.epa.gov/oppefed1/models/water/index.htm*.

Based on the Pesticide Root Zone Model/Exposure Analysis Modeling System (PRZM/EXAMS) and Screening Concentration in Ground Water (SCI–GROW) models, the estimated drinking water concentrations (EDWCs) of buprofezin for acute exposures are estimated to be 57.4 parts per billion (ppb) for surface water and 0.09 ppb for ground water. The EECs for chronic exposures are estimated to be 18.6 ppb for surface water and 0.09 ppb for ground water.

Modeled estimates of drinking water concentrations were directly entered into the dietary exposure model. For acute dietary risk assessment, the water concentration value of 57.4 ppb was used to assess the contribution to drinking water. For chronic dietary risk assessment, the water concentration of value of 18.6 ppb was used to assess the contribution to drinking water.

3. *From non-dietary exposure*. The term ''residential exposure'' is used in this document to refer to non-occupational, non-dietary exposure (e.g., for lawn and garden pest control, indoor pest control, termiticides, and flea and tick control on pets).

Buprofezin is not registered for any specific use patterns that would result in residential exposure.

4. *Cumulative effects from substances with a common mechanism of toxicity*. Section 408(b)(2)(D)(v) of FFDCA requires that, when considering whether to establish, modify, or revoke a tolerance, the Agency consider ''available information'' concerning the cumulative effects of a particular pesticide's residues and ''other substances that have a common mechanism of toxicity.''

EPA has not found buprofezin to share a common mechanism of toxicity with any other substances, and buprofezin does not appear to produce a toxic metabolite produced by other substances. For the purposes of this tolerance action, therefore, EPA has assumed that buprofezin does not have a common mechanism of toxicity with other substances. For information regarding EPA's efforts to determine which chemicals have a common mechanism of toxicity and to evaluate the cumulative effects of such chemicals, see EPA's website at *http://www.epa.gov/pesticides/cumulative*.

D. Safety Factor for Infants and Children

1. *In general*. Section 408(b)(2)(c) of FFDCA provides that EPA shall apply an additional tenfold (10X) margin of safety for infants and children in the case of threshold effects to account for prenatal and postnatal toxicity and the completeness of the database on toxicity and exposure unless EPA determines based on reliable data that a different margin of safety will be safe for infants and children. This additional margin of safety is commonly referred to as the FQPA safety factor (SF). In applying this provision, EPA either retains the default value of 10X, or uses a different additional safety factor when reliable data available to EPA support the choice of a different factor.

2. *Prenatal and postnatal sensitivity*. There is no evidence of increased quantitative or qualitative susceptibility of *in utero* rat or rabbit fetuses from exposure to buprofezin in prenatal

developmental toxicity studies; and there is no evidence of increased quantitative or qualitative susceptibility of rat offspring in the 2-generation reproduction study. There is evidence of thyroid toxicity following subchronic and chronic exposures of rats and dogs to buprofezin; however, data to determine whether young animals are more susceptible to these effects are not available.

3. *Conclusion*. EPA has determined that the FQPA safety factor of 10X must be retained and applied to all subchronic and chronic exposures whose endpoint is based on thyroid effects. For acute exposures, EPA has determined that the FQPA safety factor may be reduced to 1X. These decisions are based on the following findings:

i. The toxicity database for buprofezin lacks immunotoxicity testing; acute and subchronic neurotoxicity testing; and developmental thyroid testing. EPA began requiring functional immunotoxicity and acute and subchronic neurotoxicity testing of all food and non-food use pesticides on December 26, 2007. These studies are not yet available for buprofezin. In the absence of these data, EPA has evaluated the available buprofezin toxicity data to determine whether an additional database uncertainty factor is needed. In the available toxicity studies, there are no indications of effects on organs associated with immune function, such as the thymus and spleen. In addition, there are no indications of neurotoxic effects. Based on that, EPA does not believe that immurotoxicity or acute and subchronic testing would result in a lower POD for buprofezin that currently used. As such, an additional database uncertainty factor is not needed to account for potential immunotoxicity or acute and subchronic neurotoxicity.

However, there is uncertainty regarding potential thyroid effects seen in some of the toxicity studies. Based on the evidence of thyroid toxicity following subchronic and chronic exposures of rats (histopathological lesions) and dogs (decreases in serum thyroxine levels and increased thyroid weights), EPA has required that develomental thyroid testing be conducted.

ii. There is no indication that buprofezin is a neurotoxic chemical and there is no need for a developmental neurotoxicity study or additional UFs to account for neurotoxicity.

iii. There is no evidence that buprofezin results in increased susceptibility in *in utero* rats or rabbits in the prenatal developmental studies or in young rats in the 2-generation reproduction study. However, the developmental studies were not adequate to fully assess the potential for thyroid susceptibility from subchronic and chronic exposures. Consequently, there is concern for potential increased sensitivity or susceptibility in offspring regarding thyroid effects.

iv. There are no residual uncertainties identified in the exposure databases. The dietary food exposure assessments were refined for some commodities using reliable PCT/PPCT information and anticipated residue values calculated from the available monitoring data and field trial results. Dietary drinking water exposure is based on conservative modeling estimates. Residential exposures are not expected. These assessments will not underestimate the exposure and risks posed by buprofezin.

Although there are no residual uncertainties identified in the exposure databases, no neurotoxic concerns for buprofezin, and no evidence of increased susceptibility of offspring in available studies, there is sufficient uncertainty regarding thyroid effects, particularly thyroid effects in the young, that EPA is retaining the 10X FQPA safety factor for all subchronic and chronic exposures whose endpoint is based on thyroid effects. The FQPA Safety Factor of 10X is not applicable to the acute endpoint, since a single dose of buprofezin would not be expected to perturb thyroid homeostasis in the adult or young due to the buffering of thyroid hormone concentrations by homeostatic mechanisms for compounds with short half lives, like buprofezin.

EPA has also determined that the traditional 10X uncertainty factor to account for interspecies variation may be reduced to 3X for subchronic and chronic exposures, since it has been established that rats are more susceptible to thyroid effects than humans. These factors, together with the traditional 10X uncertainty factor to account for intraspecies variation, result in a total uncertainty factor of 300X (10X, 3X and 10X) for subchronic and chronic exposures. The total uncertainty factor for acute exposures is 100X (10X intraspecies variation and 10X interspecies variation).

E. Aggregate Risks and Determination of Safety

EPA determines whether acute and chronic pesticide exposures are safe by comparing aggregate exposure estimates to the aPAD and cPAD. The aPAD and cPAD represent the highest safe exposures, taking into account all appropriate SFs. EPA calculates the aPAD and cPAD by dividing the POD by all applicable UFs. For linear cancer risks, EPA calculates the probability of additional cancer cases given the estimated aggregate exposure. Short-term, intermediate-term, and chronic-term risks are evaluated by comparing the estimated aggregate food, water, and residential exposure to the POD to ensure that the MOE called for by the product of all applicable UFs is not exceeded.

1. *Acute risk*. Using the exposure assumptions discussed in this unit for acute exposure, the acute dietary exposure from food and water to buprofezin will occupy 7% of the aPAD for the population group females 13–49 years old. No adverse effect resulting from a single-oral exposure was identified for the remaining population groups and no acute dietary endpoint was selected. Therefore, buprofezin is not expected to pose an acute risk.

2. *Chronic risk*. Using the exposure assumptions described in this unit for chronic exposure, EPA has concluded that chronic exposure to buprofezin from food and water will utilize 80% of the cPAD for the population groups receiving the greatest exposure, all infants <1 year old and children 1–2 years old.

Therefore, buprofezin is not expected to pose a chronic risk.

There are no residential uses for buprofezin.

3. *Short-term and intermediate-term risk*. Short-term and intermediate-term aggregate exposure takes into account short-term and intermediate-term residential exposure plus chronic exposure to food and water (considered to be a background exposure level).

Buprofezin is not registered for any use patterns that would result in residential exposure. Therefore, the short-term and intermediate-term aggregate risk is the sum of the risk from exposure to buprofezin through food and water and will not be greater than the chronic aggregate risk.

4. *Aggregate cancer risk for U.S. population*. As discussed in Unit III.C.1.iii. EPA regards the carcinogenic potential of buprofezin as very low and concludes that it poses no greater than a negligible cancer risk to humans.

5. *Determination of safety*. Based on these risk assessments, EPA concludes that there is a reasonable certainty that no harm will result to the general population, or to infants and children from aggregate exposure to buprofezin residues.

IV. Other Considerations

A. Analytical Enforcement Methodology

The gas chromatography/nitrogen phosphorus detector methods used in

the field trial studies were adequately validated and similar to the method validated by EPA's Analytical Chemistry Branch (ACB) and forwarded to the Food and Drug Administration for publication in the Pesticide Analytical Manual I. Since adequate method validation and concurrent recoveries were attained in the field trial studies, EPA concludes that the method validated by ACB is appropriate for enforcement of the tolerances associated with these petitions.

The method may be requested from: Chief, Analytical Chemistry Branch, Environmental Science Center, 701 Mapes Rd., Ft. Meade, MD 20755–5350; telephone number: (410) 305–2905; e-mail address: *residuemethods@epa.gov*.

B. International Residue Limits

There are no Canadian, Mexican, or Codex maximum residue limits (MRLs) established for buprofezin in/on any of the commodities associated with the current petitions, except tomato. There are Codex and Mexican MRLs for residues of buprofezin *per se* on tomato of 1 ppm and 0.5 ppm, respectively. Both MRLs are lower than the tolerance of 1.3 ppm being established for fruiting vegetables, a group which includes tomato; however, since the field trial data considered in determining the U.S. tolerance level indicate the potential for residues in/on tomato to exceed the international MRLs, harmonization is not possible at this time.

C. Revisions to Petitioned-For Tolerances

Based upon review of the data supporting the petitions, EPA has revised the tolerance level for Brassica, head and stem, subgroup 5A from 7.0 ppm to 12.0 ppm. EPA revised this tolerance level based on analyses of the residue field trial data using the Agency's Tolerance Spreadsheet in accordance with the Agency's Guidance for Setting Pesticide Tolerances Based on Field Trial Data. EPA also revised the tolerance expression to clarify 1. That, as provided in FFDCA section 408(a)(3), the tolerance covers metabolites and degradates of buprofezin not specifically mentioned; and 2. That compliance with the specified tolerance levels is to be determined by measuring only the specific compounds mentioned in the tolerance expression. This change makes no substantive change to the meaning of the tolerance but rather only clarifies the existing language.

V. Conclusion

Therefore, tolerances are established for residues of buprofezin, 2-[(1,1-dimethylethyl)imino]tetrahydro-3(1-methylethyl)-5-phenyl-4H-1,3,5-thiadiazin-4-one, in or on Brassica, head and stem, subgroup 5A at 12.0 ppm; in or on coffee, green bean at 0.35 ppm; and in or on pomegranate at 1.9 ppm.

VI. Statutory and Executive Order Reviews

This final rule establishes tolerances under section 408(d) of FFDCA in response to a petition submitted to the Agency. The Office of Management and Budget (OMB) has exempted these types of actions from review under Executive Order 12866, entitled *Regulatory Planning and Review* (58 FR 51735, October 4, 1993). Because this final rule has been exempted from review under Executive Order 12866, this final rule is not subject to Executive Order 13211, entitled *Actions Concerning Regulations That Significantly Affect Energy Supply, Distribution, or Use* (66 FR 28355, May 22, 2001) or Executive Order 13045, entitled *Protection of Children from Environmental Health Risks and Safety Risks* (62 FR 19885, April 23, 1997). This final rule does not contain any information collections subject to OMB approval under the Paperwork Reduction Act (PRA), 44 U.S.C. 3501 *et seq.*, nor does it require any special considerations under Executive Order 12898, entitled *Federal Actions to Address Environmental Justice in Minority Populations and Low-Income Populations* (59 FR 7629, February 16, 1994).

Since tolerances and exemptions that are established on the basis of a petition under section 408(d) of FFDCA, such as the tolerance in this final rule, do not require the issuance of a proposed rule, the requirements of the Regulatory Flexibility Act (RFA) (5 U.S.C. 601 *et seq.*) do not apply.

This final rule directly regulates growers, food processors, food handlers, and food retailers, not States or tribes, nor does this action alter the relationships or distribution of power and responsibilities established by Congress in the preemption provisions of section 408(n)(4) of FFDCA. As such, the Agency has determined that this action will not have a substantial direct effect on States or tribal governments, on the relationship between the national government and the States or tribal governments, or on the distribution of power and responsibilities among the various levels of government or between the Federal Government and Indian tribes. Thus, the Agency has determined that Executive Order 13132, entitled *Federalism* (64 FR 43255, August 10, 1999) and Executive Order 13175, entitled *Consultation and Coordination with Indian Tribal Governments* (65 FR 67249, November 9, 2000) do not apply to this final rule. In addition, this final rule does not impose any enforceable duty or contain any unfunded mandate as described under Title II of the Unfunded Mandates Reform Act of 1995 (UMRA) (Pub. L. 104–4).

This action does not involve any technical standards that would require Agency consideration of voluntary consensus standards pursuant to section 12(d) of the National Technology Transfer and Advancement Act of 1995 (NTTAA), Public Law 104–113, section 12(d) (15 U.S.C. 272 note).

VII. Congressional Review Act

The Congressional Review Act, 5 U.S.C. 801 *et seq.*, generally provides that before a rule may take effect, the agency promulgating the rule must submit a rule report to each House of the Congress and to the Comptroller General of the United States. EPA will submit a report containing this rule and other required information to the U.S. Senate, the U.S. House of Representatives, and the Comptroller General of the United States prior to publication of this final rule in the **Federal Register**. This final rule is not a ''major rule'' as defined by 5 U.S.C. 804(2).

List of Subjects in 40 CFR Part 180

Environmental protection, Administrative practice and procedure, Agricultural commodities, Pesticides and pests, Reporting and recordkeeping requirements.

Dated: July 1, 2009.

G. Jeffery Herndon,

Acting Director, Registration Division, Office of Pesticide Programs.

■ Therefore, 40 CFR chapter I is amended as follows:

PART 180—[AMENDED]

■ 1. The authority citation for part 180 continues to read as follows:

Authority: 21 U.S.C. 321(q), 346a and 371.

■ 2. Section 180.511 is amended in paragraph (a) by revising the introductory text and alphabetically adding the following commodities to the table to read as follows:

§ 180.511 Buprofezin; tolerances for residues.

(a) *General*. Tolerances are established for residues of buprofezin, including its metabolites and degradates in or on the commodities in the table below. Compliance with the tolerance levels specified below is to be determined by measuring only the buprofezin, 2-[(1,1-dimethylethyl)imino]tetrahydro-3(1-

methylethyl)-5-phenyl-4*H*-1,3,5-thiadiazin-4-one, in the commodity.

Commodity	Parts per million
* * * * *	
Brassica, head and stem, subgroup 5A	12.0
* * * * *	
Coffee, green bean	0.35
* * * * *	
Pomegranate	1.9
* * * * *	

* * * * *

[FR Doc. E9–16367 Filed 7–9–09; 8:45 am]

BILLING CODE 6560–50–S

ENVIRONMENTAL PROTECTION AGENCY

40 CFR Part 180

[EPA–HQ–OPP–2008–0271; FRL–8424–9]

Indoxacarb; Pesticide Tolerances

AGENCY: Environmental Protection Agency (EPA).

ACTION: Final rule.

SUMMARY: This regulation establishes tolerances for combined residues of indoxacarb and its metabolites and degradates, to be determined by measuring only indoxacarb and its R-enantiomer, in or on beet, garden, roots; beet, garden, tops; and bushberry subgroup 13–07B. Interregional Research Project Number 4 (IR–4) requested these tolerances under the Federal Food, Drug, and Cosmetic Act (FFDCA).

DATES: This regulation is effective July 10, 2009. Objections and requests for hearings must be received on or before September 8, 2009, and must be filed in accordance with the instructions provided in 40 CFR part 178 (see also Unit I.C. of the **SUPPLEMENTARY INFORMATION**).

ADDRESSES: EPA has established a docket for this action under docket identification (ID) number EPA–HQ–OPP–2008–0271. All documents in the docket are listed in the docket index available at *http://www.regulations.gov*. Although listed in the index, some information is not publicly available, e.g., Confidential Business Information (CBI) or other information whose disclosure is restricted by statute. Certain other material, such as copyrighted material, is not placed on the Internet and will be publicly available only in hard copy form. Publicly available docket materials are available in the electronic docket at *http://www.regulations.gov*, or, if only available in hard copy, at the OPP Regulatory Public Docket in Rm. S–4400, One Potomac Yard (South Bldg.), 2777 S. Crystal Dr., Arlington, VA. The Docket Facility is open from 8:30 a.m. to 4 p.m., Monday through Friday, excluding legal holidays. The Docket Facility telephone number is (703) 305–5805.

FOR FURTHER INFORMATION CONTACT: Susan Stanton, Registration Division (7505P), Office of Pesticide Programs, Environmental Protection Agency, 1200 Pennsylvania Ave., NW., Washington, DC 20460–0001; telephone number: (703) 305–5218; e-mail address: *stanton.susan@epa.gov*.

SUPPLEMENTARY INFORMATION:

I. General Information

A. Does this Action Apply to Me?

You may be potentially affected by this action if you are an agricultural producer, food manufacturer, or pesticide manufacturer. Potentially affected entities may include, but are not limited to those engaged in the following activities:

- Crop production (NAICS code 111).
- Animal production (NAICS code 112).
- Food manufacturing (NAICS code 311).
- Pesticide manufacturing (NAICS code 32532).

This listing is not intended to be exhaustive, but rather to provide a guide for readers regarding entities likely to be affected by this action. Other types of entities not listed in this unit could also be affected. The North American Industrial Classification System (NAICS) codes have been provided to assist you and others in determining whether this action might apply to certain entities. If you have any questions regarding the applicability of this action to a particular entity, consult the person listed under **FOR FURTHER INFORMATION CONTACT**.

B. How Can I Access Electronic Copies of this Document?

In addition to accessing electronically available documents at *http://www.regulations.gov*, you may access this **Federal Register** document electronically through the EPA Internet under the ''**Federal Register**'' listings at *http://www.epa.gov/fedrgstr*. You may also access a frequently updated electronic version of EPA's tolerance regulations at 40 CFR part 180 through the Government Printing Office's e-CFR cite at *http://www.gpoaccess.gov/ecfr*. To access the OPPTS Harmonized Guidelines referenced in this document, go directly to the guidelines at *http://www.epa.gpo/opptsfrs/home/guidelin.htm*.

C. Can I File an Objection or Hearing Request?

Under section 408(g) of FFDCA, 21 U.S.C. 346a, any person may file an objection to any aspect of this regulation and may also request a hearing on those objections. You must file your objection or request a hearing on this regulation in accordance with the instructions provided in 40 CFR part 178. To ensure proper receipt by EPA, you must identify docket ID number EPA–HQ–OPP–2008–0271 in the subject line on the first page of your submission. All requests must be in writing, and must be mailed or delivered to the Hearing Clerk as required by 40 CFR part 178 on or before September 8, 2009.

In addition to filing an objection or hearing request with the Hearing Clerk as described in 40 CFR part 178, please submit a copy of the filing that does not contain any CBI for inclusion in the public docket that is described in **ADDRESSES**. Information not marked confidential pursuant to 40 CFR part 2 may be disclosed publicly by EPA without prior notice. Submit this copy, identified by docket ID number EPA–HQ–OPP–2008–0271, by one of the following methods:

- *Federal eRulemaking Portal*: *http://www.regulations.gov*. Follow the on-line instructions for submitting comments.
- *Mail*: Office of Pesticide Programs (OPP) Regulatory Public Docket (7502P), Environmental Protection Agency, 1200 Pennsylvania Ave., NW., Washington, DC 20460–0001.

• *Delivery*: OPP Regulatory Public Docket (7502P), Environmental Protection Agency, Rm. S–4400, One Potomac Yard (South Bldg.), 2777 S. Crystal Dr., Arlington, VA. Deliveries are only accepted during the Docket Facility's normal hours of operation (8:30 a.m. to 4 p.m., Monday through Friday, excluding legal holidays). Special arrangements should be made for deliveries of boxed information. The Docket Facility telephone number is (703) 305–5805.

II. Petition for Tolerance

In the **Federal Register** of May 16, 2008 (73 FR 28461) (FRL–8361–6), EPA issued a notice pursuant to section 408(d)(3) of FFDCA, 21 U.S.C. 346a(d)(3), announcing the filing of a pesticide petition (PP 8E7324) by Interregional Research Project Number 4 (IR–4), 500 College Road East, Suite 201 W, Princeton, NJ 08540. The petition requested that 40 CFR 180.564 be amended by establishing tolerances for combined residues of the insecticide indoxacarb, (S)-methyl 7-chloro-2,5-dihydro-2-[[(methoxycarbonyl)[4-(trifluoromethoxy)phenyl] amino]carbonyl]indeno[1,2-*e*] [1,3,4][oxadiazine-4a(3*H*)-carboxylate, and its R-enantiomer, (R)-methyl 7-chloro-2,5-dihydro-2-[[(methoxycarbonyl)[4-(trifluoromethoxy) phenyl]amino]carbonyl]indeno[1,2-*e*][1,3,4][oxadiazine-4a(3*H*)-carboxylate, in or on beet, garden, roots at 0.30 parts per million (ppm); beet, garden, tops at 6.0 ppm; and bushberry subgroup 13–07B at 1.5 ppm. That notice referenced a summary of the petition prepared on behalf of IR–4 by E.I. du Pont de Nemours and Company, the registrant, which is available to the public in the docket, *http://www.regulations.gov*. There were no comments received in response to the notice of filing.

III. Aggregate Risk Assessment and Determination of Safety

Section 408(b)(2)(A)(i) of FFDCA allows EPA to establish a tolerance (the legal limit for a pesticide chemical residue in or on a food) only if EPA determines that the tolerance is ''safe.'' Section 408(b)(2)(A)(ii) of FFDCA defines ''safe'' to mean that ''there is a reasonable certainty that no harm will result from aggregate exposure to the pesticide chemical residue, including all anticipated dietary exposures and all other exposures for which there is reliable information.'' This includes exposure through drinking water and in residential settings, but does not include occupational exposure. Section 408(b)(2)(C) of FFDCA requires EPA to give special consideration to exposure of infants and children to the pesticide chemical residue in establishing a tolerance and to ''ensure that there is a reasonable certainty that no harm will result to infants and children from aggregate exposure to the pesticide chemical residue....''

Consistent with section 408(b)(2)(D) of FFDCA, and the factors specified in section 408(b)(2)(D) of FFDCA, EPA has reviewed the available scientific data and other relevant information in support of this action. EPA has sufficient data to assess the hazards of and to make a determination on aggregate exposure for the petitioned-for tolerances for combined residues of indoxacarb and its metabolites and degradates, to be determined by measuring only indoxacarb and its R-enantiomer, on beet, garden, roots at 0.30 ppm; beet, garden, tops at 6.0 ppm; and bushberry subgroup 13–07B at 1.5 ppm. EPA's assessment of exposures and risks associated with establishing these tolerances follows.

A. Toxicological Profile

EPA has evaluated the available toxicity data and considered its validity, completeness, and reliability as well as the relationship of the results of the studies to human risk. EPA has also considered available information concerning the variability of the sensitivities of major identifiable subgroups of consumers, including infants and children.

Indoxacarb is the S-enantiomer of an isomeric compound containing two enantiomers, the S-enantiomer (DPX–KN128, the insecticidally active component) and its R-enantiomer (DPX–KN127, the insecticidally inactive component). DPX–MP062 is an enantiomeric mixture containing the S-enantiomer and its R-enantiomer at approximately a 75:25 ratio. DPX–JW062 is the racemic mixture of the enantiomers at a 50:50 ratio.

DPX–KN128, DPX–MP062 and DPX–JW062 appear to be of similar toxicity acutely. DPX–KN128 and DPX–MP062 were moderately acutely toxic by the oral route while DPX–JW062 was practically non-toxic due to its poor solubility in the corn oil vehicle. However, it was equally toxic orally, when tested using a solvent where it had a higher solubility, such as polyethylene glycol (PEG). By the dermal route, they had low toxicity. DPX–MP062 and DPX–JW062 had low acute inhalation toxicity. DPX–MP062 and DPX–JW062 had moderate to low ocular irritant properties, while DPX–KN128 was practically non-irritating to the rabbit's eyes. By the maximization test, DPX–KN128 and DPX–MP062 were considered dermal sensitizers, while DPX–JW062 was not a sensitizer.

There was possible evidence of lung damage in the acute inhalation studies with both DPX–MP062 and DPX–JW062. ''Lung noise,'' observed with JW062, may indicate the development of acute lung injury and high permeability pulmonary edema. This was not unexpected since an oxidant was generated during indoxacarb metabolism. ''Hunched over back and gasping'' were also present and suggested arterial hypoxemia that accompanies alveolar flooding. The acute inhalation study report with indoxacarb 70% manufacturing use product noted that a ''red nasal discharge'' was detected for 2 days after exposure. This may be indicative of a lung exudate, a sign of lung injury. Subchronic (28 days) inhalation toxicity of indoxacarb in rats was characterized by increased spleen weights, increased pigmentation and hematopoiesis in the spleen, and hematological changes.

The toxicity profiles for DPX–KN128, DPX–MP062, and DPX–JW062 in rats, mice, and dogs with both subchronic and chronic oral exposures were similar. Dermal subchronic exposure in the rat also resulted in a similar profile. The toxic signs occurred at similar doses and with a similar magnitude of response, with females generally being more sensitive than males. The endpoints that most frequently defined the lowest-observed-adverse-effect-level (LOAEL) were non-specific, and included decreased body weight, weight gain, food consumption, and food efficiency. These compounds also affected the hematopoietic system by decreasing the red blood cell count, hemoglobin, and hematocrit in rats, dogs and mice. It was frequently accompanied by an increase in reticulocytes in all three species and an increase in Heinz bodies (dogs and mice only). None of these signs of toxicity appeared to get worse over time. In one subchronic rat study, the parameters appeared to return to normal levels following a four-week recovery period. High doses in the rats and mice also sometimes caused mortality.

There was no evidence of increased susceptibility of fetuses or offspring from either *in utero* or neonatal exposure to DPX–MP062 or DPX–JW062. There was no evidence of increased susceptibility from *in utero* exposure of rats to DPX–KN128. There was no evidence of increased susceptibility in the developmental neurotoxicity study in rats with DPX–KN128. No evidence of teratogenicity was observed in rats and rabbits with

DPX–MP062 or DPX–JW062. No evidence of teratogenicity was observed in rats with DPX–KN128. There was no evidence of reproductive effects in the 2-generation reproduction study in rats.

Neurotoxicity was observed in both rats and mice; however, it did not occur in the absence of other signs of toxicity. Neurotoxicity was characterized by one or more of the following symptoms in both male and female rats and mice: Weakness, head tilting, and abnormal gait or mobility with inability to stand and ataxia. Acute and subchronic neurotoxicity screening batteries were performed using DPX–MP062 in rats. Neurotoxicity was characterized by clinical signs (depression, abnormal gait, head shake, salivation) and functional-observation battery (FOB) effects (circling behavior, incoordination, slow righting reflex, decreased forelimb grip strength, decreased foot splay, decreased motor activity). However, there was no evidence of neurohistopathology in any study. Learning and memory parameters were affected in the pups in the developmental neurotoxicity study in rats with DPX–KN128.

There was no evidence of carcinogenicity in either the rat or mouse in acceptable studies using DPX–JW062. DPX–JW062 was not mutagenic in a complete battery of mutagenicity studies. There was also no evidence of mutagenicity with either DPX–KN128, or DPX–MP062.

Both DPX–JW062 and DPX–MP062 were rapidly absorbed and eliminated following oral administration. The absorption of DPX–JW062 was dose dependent and appeared to be saturated at the high dose. Both urine and feces represented major routes of excretion (35–45% and 33–47%, respectively). The distribution pattern did not vary with dosing regimen and overall tissue burden was limited to only 3.4–12.9% of the administered dose. The red blood cells of rats dosed with the trifluoromethoxyphenyl label consistently contained much greater levels of radioactivity than did plasma. Fat tissue contained the greatest level of radioactivity (1.76–8.76% of the administered dose) and, for both compounds, was greater in female rats. The finding also demonstrates a greater propensity for accumulation by female rats than by male rats. Both DPX–MP062 and DPX–JW062 were extensively metabolized and the metabolites were eliminated in the urine, feces, and bile. With the exception of parent compound (DPX–JW062, which accounted for 19.2% of a single low dose in the feces of female rats), none of the metabolites from any source represented more than 12.3% of the administered dose. The metabolite profile for DPX–JW062 was dose dependent and varied quantitatively between males and females. Differences in metabolite profiles were also observed for the different label positions. All of the biliary metabolites appear to undergo further biotransformation in the gut.

Specific information on the studies received and the nature of the adverse effects caused by indoxacarb as well as the no-observed-adverse-effect-level (NOAEL) and the LOAEL from the toxicity studies can be found at *http://www.regulations.gov* in the document *Indoxacarb. Health Effects Division (HED) Human Health Risk Assessment for Bushberry Crop Subgroup 13–07B and Beets (Garden)*, page 13 in docket ID number EPA–HQ–OPP–2008–0271.

B. Toxicological Endpoints

For hazards that have a threshold below which there is no appreciable risk, a toxicological point of departure (POD) is identified as the basis for derivation of reference values for risk assessment. The POD may be defined as the highest dose at which the NOAEL in the toxicology study identified as appropriate for use in risk assessment. However, if a NOAEL cannot be determined, the LOAEL or a Benchmark Dose (BMD) approach is sometimes used for risk assessment. Uncertainty/safety factors (UFs) are used in conjunction with the POD to take into account uncertainties inherent in the extrapolation from laboratory animal data to humans and in the variations in sensitivity among members of the human population as well as other unknowns. Safety is assessed for acute and chronic dietary risks by comparing aggregate food and water exposure to the pesticide to the acute population adjusted dose (aPAD) and chronic population adjusted dose (cPAD). The aPAD and cPAD are calculated by dividing the POD by all applicable UFs. Aggregate short-, intermediate-, and chronic-term risks are evaluated by comparing food, water, and residential exposure to the POD to ensure that the margin of exposure (MOE) called for by the product of all applicable UFs is not exceeded. This latter value is referred to as the Level of Concern (LOC).

For non-threshold risks, the Agency assumes that any amount of exposure will lead to some degree of risk. Thus, the Agency estimates risk in terms of the probability of an occurrence of the adverse effect greater than that expected in a lifetime. For more information on the general principles EPA uses in risk characterization and a complete description of the risk assessment process, see *http://www.epa.gov/pesticides/factsheets/riskassess.htm*.

A summary of the toxicological endpoints for indoxacarb used for human risk assessment can be found at *http://www.regulations.gov* in the document *Indoxacarb. Health Effects Division (HED) Human Health Risk Assessment for Bushberry Crop Subgroup 13–07B and Beets (Garden)*, page 18 in docket ID number EPA–HQ–OPP–2008–0271.

C. Exposure Assessment

1. *Dietary exposure from food and feed uses*. In evaluating dietary exposure to indoxacarb, EPA considered exposure under the petitioned-for tolerances as well as all existing indoxacarb tolerances in 40 CFR 180.564. EPA assessed dietary exposures from indoxacarb in food as follows:

i. *Acute exposure*. Quantitative acute dietary exposure and risk assessments are performed for a food-use pesticide, if a toxicological study has indicated the possibility of an effect of concern occurring as a result of a 1–day or single exposure.

In estimating acute dietary exposure, EPA used food consumption information from the United States Department of Agriculture (USDA) 1994–1996 and 1998 Nationwide Continuing Surveys of Food Intake by Individuals (CSFII). As to residue levels in food, for most currently registered commodities, EPA used anticipated residues derived from field trial data and maximum percent crop treated (PCT) estimates. EPA assumed tolerance-level residues and 100 PCT for the new commodities associated with this petition (garden beets and bushberries). Available processing data for indoxacarb were used to refine anticipated residues for apples/pears (juice), potato (dry, chips), cotton (oil), tomato (paste and puree), peanut (oil), soybean (oil), grapes (raisin and juice), prunes (dried), mint (oil), and other commodities where translation was appropriate. For all other processed commodities, DEEM–FCID™ (ver. 7.81) default processing factors were assumed.

ii. *Chronic exposure*. In conducting the chronic dietary exposure assessment EPA used the food consumption data from the USDA 1994–1996 and 1998 CSFII. As to residue levels in food, EPA relied upon anticipated residues derived from field trial data for most of the registered and new commodities and an anticipated residue value for milk derived from monitoring data collected by the United States Department of Agriculture's Pesticide Data Program

(PDP). Residue estimates were further refined using average PCT data and available processing data, as described in Unit III.C.i. EPA assumed 100 PCT for the new commodities, garden beets and bushberries.

iii. *Cancer*. Based on the results of carcinogenicity studies in rats and mice, EPA classified indoxacarb as ''not likely'' to be carcinogenic to humans via relevant routes of exposure. Therefore, an exposure assessment for evaluating cancer risk is unnecessary.

iv. *Anticipated residue and percent crop treated (PCT) information*. Section 408(b)(2)(E) of FFDCA authorizes EPA to use available data and information on the anticipated residue levels of pesticide residues in food and the actual levels of pesticide residues that have been measured in food. If EPA relies on such information, EPA must require pursuant to FFDCA section 408(f)(1) that data be provided 5 years after the tolerance is established, modified, or left in effect, demonstrating that the levels in food are not above the levels anticipated. For the present action, EPA will issue such data call-ins as are required by FFDCA section 408(b)(2)(E) and authorized under FFDCA section 408(f)(1). Data will be required to be submitted no later than 5 years from the date of issuance of these tolerances.

Section 408(b)(2)(F) of FFDCA states that the Agency may use data on the actual percent of food treated for assessing chronic dietary risk only if:

• Condition a: The data used are reliable and provide a valid basis to show what percentage of the food derived from such crop is likely to contain the pesticide residue.

• Condition b: The exposure estimate does not underestimate exposure for any significant subpopulation group.

• Condition c: Data are available on pesticide use and food consumption in a particular area, the exposure estimate does not understate exposure for the population in such area.

In addition, the Agency must provide for periodic evaluation of any estimates used. To provide for the periodic evaluation of the estimate of PCT as required by FFDCA section 408(b)(2)(F), EPA may require registrants to submit data on PCT.

The Agency used PCT information as follows:

Acute dietary exposure assessment: Apple 5%, broccoli 50%, cabbage 25%, cauliflower 55%, cherry 2.5%, corn (sweet) 2.5%, lettuce (head) 25%, lettuce (leaf) 11%, peach 2.5%, peanut 2.5%, pear 2.5%, pepper 15%, potato 2.5%, soybean 1%, spinach 5%, and tomato 25%.

Chronic dietary exposure assessment: Apple 1%, broccoli 40%, cabbage 15%, cauliflower 35%, cherry 1%, lettuce (head) 18%, lettuce (leaf) 9%, peach 1%, peanut 1%, pear 1%, pepper 10%, potato 1%, soybean 1%, spinach 5%, and tomato 15%.

In most cases, EPA uses available data from United States Department of Agriculture/National Agricultural Statistics Service (USDA/NASS), proprietary market surveys, and the National Pesticide Use Database for the chemical/crop combination for the most recent 6 years. EPA uses an average PCT for chronic dietary risk analysis. The average PCT figure for each existing use is derived by combining available public and private market survey data for that use, averaging across all observations, and rounding to the nearest 5%, except for those situations in which the average PCT is less than one. In those cases, 1% is used as the average PCT and 2.5% is used as the maximum PCT. EPA uses a maximum PCT for acute dietary risk analysis. The maximum PCT figure is the highest observed maximum value reported within the recent 6 years of available public and private market survey data for the existing use and rounded up to the nearest multiple of 5%.

The Agency believes that the three conditions discussed in Unit III.C.1.iv. have been met. With respect to Condition a, PCT estimates are derived from Federal and private market survey data, which are reliable and have a valid basis. The Agency is reasonably certain that the percentage of the food treated is not likely to be an underestimation. As to Conditions b and c, regional consumption information and consumption information for significant subpopulations is taken into account through EPA's computer-based model for evaluating the exposure of significant subpopulations including several regional groups. Use of this consumption information in EPA's risk assessment process ensures that EPA's exposure estimate does not understate exposure for any significant subpopulation group and allows the Agency to be reasonably certain that no regional population is exposed to residue levels higher than those estimated by the Agency. Other than the data available through national food consumption surveys, EPA does not have available reliable information on the regional consumption of food to which indoxacarb may be applied in a particular area.

2. *Dietary exposure from drinking water*. The Agency used screening level water exposure models in the dietary exposure analysis and risk assessment for indoxacarb in drinking water. These simulation models take into account data on the physical, chemical, and fate/transport characteristics of indoxacarb. Further information regarding EPA drinking water models used in pesticide exposure assessment can be found at *http://www.epa.gov/oppefed1/models/water/index.htm*.

Based on the Pesticide Root Zone Model /Exposure Analysis Modeling System (PRZM/EXAMS) and Screening Concentration in Ground Water (SCI–GROW) models, the estimated drinking water concentrations (EDWCs) of indoxacarb for acute exposures are estimated to be 25.1 parts per billion (ppb) for surface water and 0.21 ppb for ground water. The EDWCs of indoxacarb for chronic exposures for non-cancer assessments are estimated to be 5.37 ppb for surface water and 0.21 ppb for ground water.

Modeled estimates of drinking water concentrations were directly entered into the dietary exposure model. For acute dietary risk assessment, the water concentration value of 25.1 ppb was used to assess the contribution to drinking water. For chronic dietary risk assessment, the water concentration of value 5.37 ppb was used to assess the contribution to drinking water.

3. *From non-dietary exposure*. The term ''residential exposure'' is used in this document to refer to non-occupational, non-dietary exposure (e.g., for lawn and garden pest control, indoor pest control, termiticides, and flea and tick control on pets).

Indoxacarb is currently registered for several uses that could result in residential, non-dietary exposures. Indoxacarb is registered for use as a fire ant bait, which may be applied as a mound treatment or as a broadcast application to lawns, golf courses, and other recreational areas. Indoxacarb is also registered as a mole cricket bait applied as a broadcast treatment to lawns, golf courses, parks, recreational areas, and athletic fields. Finally, indoxacarb is registered as a foliar or broadcast spray to control lepidopterous larvae on landscape and recreational (including golf courses) turfgrass and ornamentals. EPA assessed residential exposure using the following assumptions:

Based on the residential use patterns, commercial and private (i.e., grower/homeowner) pesticide handlers are expected to have short-term (1–30 days) dermal and inhalation exposures to indoxacarb. Commercial handlers may also have intermediate-term exposures (1–6 months). The short- and intermediate-term toxicological points of departure are the same; therefore, the

risk estimates for intermediate-term exposures are the same as those for short-term exposures.

There is also the potential for short- and intermediate-term postapplication exposure of adults and children from entering areas previously treated with indoxacarb. The postapplication exposure scenarios assessed include: Dermal exposure from treated lawns due to high contact lawn activities (adult and toddler); Dermal exposure from treated turf due to golfing (adults and youths); Hand-to-mouth transfer of pesticide residues on lawns (toddler); Episodic incidental ingestion of granules from pesticide-treated residential areas (toddler); Incidental ingestion of soil from pesticide-treated residential areas (toddler); and Incidental oral object-to-mouth exposure from pesticide-treated residential areas (toddler).

Postapplication inhalation exposures are expected to be negligible and, therefore, were not assessed.

4. *Cumulative effects from substances with a common mechanism of toxicity.* Section 408(b)(2)(D)(v) of FFDCA requires that, when considering whether to establish, modify, or revoke a tolerance, the Agency consider ''available information'' concerning the cumulative effects of a particular pesticide's residues and ''other substances that have a common mechanism of toxicity.''

EPA has not found indoxacarb to share a common mechanism of toxicity with any other substances, and indoxacarb does not appear to produce a toxic metabolite produced by other substances. For the purposes of this tolerance action, therefore, EPA has assumed that indoxacarb does not have a common mechanism of toxicity with other substances. For information regarding EPA's efforts to determine which chemicals have a common mechanism of toxicity and to evaluate the cumulative effects of such chemicals, see EPA's website at *http://www.epa.gov/pesticides/cumulative*.

D. Safety Factor for Infants and Children

1. *In general.* Section 408(b)(2)(c) of FFDCA provides that EPA shall apply an additional tenfold (10X) margin of safety for infants and children in the case of threshold effects to account for prenatal and postnatal toxicity and the completeness of the database on toxicity and exposure unless EPA determines based on reliable data that a different margin of safety will be safe for infants and children. This additional margin of safety is commonly referred to as the FQPA safety factor (SF). In applying this provision, EPA either retains the default value of 10X, or uses a different additional safety factor when reliable data available to EPA support the choice of a different factor.

2. *Prenatal and postnatal sensitivity.* There was no quantitative or qualitative evidence of increased prenatal or postnatal sensitivity in the two developmental toxicity studies in rats with DPX–JW062, one developmental toxicity study in rats with DPX–MP062 and DPX–KN128, one developmental toxicity study in rabbits with DPX–JW062, one 2-generation reproduction studies in rats with DPX–JW062 and a developmental neurotoxicity (DNT) study in rats with DPX–KN128. In these studies, developmental toxicity was observed in the presence of maternal toxicity.

3. *Conclusion.* EPA has determined that reliable data show the safety of infants and children would be adequately protected if the FQPA SF were reduced to 1X. That decision is based on the following findings:

i. With the exception of an immunotoxicity study, now mandatory under the 40 CFR part 158 Data Requirements for Pesticides, the toxicological database for indoxacarb is complete. The available data do not indicate that indoxacarb is immunotoxic. In the 28–day inhalation study in rats, increased spleen weights, pigmentation and hematopoiesis in the spleen, and hematological changes were observed at the highest dose tested (75.6 mg/kg/day). Increased spleen weights were also observed in the 28–day dermal rat study at 500 mg/kg/day. The increase in spleen weights is not considered immunological in origin but can be considered a result of the hemolytic effects, which is the mode of action of indoxacarb. Indoxacarb is currently regulated based on a NOAEL of 1.5 mg/kg/day for chronic dietary exposure (protective of hemolytic effects) and 9 mg/kg/day for acute dietary exposure. EPA does not believe that conducting a special series 870.7800 immunotoxicity study will result in NOAELs lower than those currently identified for indoxacarb, and an additional uncertainty factor is not needed to account for immunotoxicity.

ii. EPA has determined that an additional uncertainty factor is not needed to account for neurotoxicity. Neurotoxicity was seen in animal studies in rats and mice but at higher doses than the hematologic effects on which EPA's risk assessments are based. To evaluate the potential for increased sensitivity of infants and children to neurotoxic effects, EPA required a rat developmental neurotoxicity (DNT) study. The study has been submitted and reviewed. There was no evidence of increased sensitivity of offspring in the submitted study. Clinical observations, motor activity, acoustic startle habituation, and learning and memory testing were all comparable between the control and treated groups. Mean brain weight, gross and microscopic examinations, and morphometric measurements of the brain were also comparable between the controls and treated groups.

iii. There is no evidence that indoxacarb results in increased susceptibility in *in utero* rats or rabbits in the prenatal developmental studies or in young rats in the 2–generation reproduction study.

iv. There are no residual uncertainties identified in the exposure databases. The acute and chronic dietary food exposure assessments utilize anticipated residues that are based on reliable field trial and monitoring data. They also utilize PCT data that have been verified by the Agency for most existing uses. For the new uses, a conservative estimate of 100 PCT is assumed. EPA made conservative (protective) assumptions in the ground and surface water modeling used to assess exposure to indoxacarb in drinking water. EPA used similarly conservative assumptions to assess postapplication exposure of children as well as incidental oral exposure of toddlers. These assessments will not underestimate the exposure and risks posed by indoxacarb.

E. Aggregate Risks and Determination of Safety

EPA determines whether acute and chronic pesticide exposures are safe by comparing aggregate exposure estimates to the aPAD and cPAD. The aPAD and cPAD represent the highest safe exposures, taking into account all appropriate SFs. EPA calculates the aPAD and cPAD by dividing the POD by all applicable UFs. For linear cancer risks, EPA calculates the probability of additional cancer cases given the estimated aggregate exposure. Short-, intermediate-, and chronic-term risks are evaluated by comparing the estimated aggregate food, water, and residential exposure to the POD to ensure that the MOE called for by the product of all applicable UFs is not exceeded.

1. *Acute risk.* An acute aggregate risk assessment takes into account exposure estimates from acute dietary consumption of food and drinking water. Using the exposure assumptions discussed in this unit for acute exposure, the acute dietary exposure from food and water to indoxacarb will

occupy 63% of the aPAD for children 3 to 5 years old, the population group receiving the greatest exposure.

2. *Chronic risk*. Using the exposure assumptions described in this unit for chronic exposure, EPA has concluded that chronic exposure to indoxacarb from food and water will utilize 6.6% of the cPAD for children 1 to 2 years old, the population group receiving the greatest exposure. Based on the explanation in Unit III.C.3., regarding residential use patterns, chronic residential exposure to residues of indoxacarb is not expected.

3. *Short- and intermediate-term risk*. Short- and intermediate-term aggregate exposures take into account short- or intermediate-term residential exposure plus chronic exposure from food and water (considered to be a background exposure level). Indoxacarb is currently registered for uses that could result in short- and intermediate-term residential exposures and the Agency has determined that it is appropriate to aggregate chronic exposure through food and water with short- and intermediate-term residential exposures to indoxacarb.

Using the exposure assumptions described in this unit for short- and intermediate-term exposures, EPA has concluded the combined short-/intermediate-term food, water, and residential exposures aggregated result in aggregate MOEs of 320 for adults and 102 for children (toddlers). The aggregate MOE for adults includes dietary exposures from food and drinking water, as well as dermal handler and postapplication exposures from the residential use of indoxacarb on turf for mole cricket control, the residential scenario resulting in the highest estimated exposures. Similarly, the aggregate MOE for toddlers includes dietary (food and drinking water) and residential exposures. The residential exposure estimate for toddlers is also based on the worst-case turf scenario (mole cricket control) and includes dermal and incidental oral postapplication exposures. The highest estimated incidental oral exposures for toddlers are from hand-to-mouth activities on treated turf; therefore, the oral hand-to-mouth exposures were used to calculate the aggregate MOE for toddlers.

5. *Aggregate cancer risk for U.S. population*. EPA has classified indoxacarb as ''not likely'' to be carcinogenic to humans via relevant routes of exposure. Indoxacarb is not expected to pose a cancer risk.

6. *Determination of safety*. Based on these risk assessments, EPA concludes that there is a reasonable certainty that no harm will result to the general population, or to infants and children from aggregate exposure to indoxacarb residues.

IV. Other Considerations

A. Analytical Enforcement Methodology

Adequate enforcement methodology (high-performance liquid chromatography (HPLC)/column switching/ultraviolet (UV) method AMR 2712–93 with confirmation/specificity provided by gas chromatography (GC)/mass-selective detector method AMR 3493–95, Supplement No. 4) is available to enforce the tolerance expression. The method may be requested from: Chief, Analytical Chemistry Branch, Environmental Science Center, 701 Mapes Rd., Ft. Meade, MD 20755–5350; telephone number: (410) 305–2905; e-mail address: *residuemethods@epa.gov*.

B. International Residue Limits

There are no established or proposed Codex, Canadian or Mexican maximum residue limits (MRLs) for indoxacarb on bushberries or garden beets.

C. Changes to Proposed Tolerances

Tolerances for indoxacarb are currently expressed in terms of ''combined residues of indoxacarb, (S)-methyl 7-chloro-2,5-dihydro-2-[[(methoxycarbonyl)[4-(trifluoromethoxy)phenyl] amino]carbonyl]indeno[1,2-*e*][1,3,4][oxadiazine-4a(3*H*)-carboxylate, and its R-enantiomer, (R)-methyl 7-chloro-2,5-dihydro-2-[[(methoxycarbonyl)[4-(trifluoromethoxy) phenyl]amino]carbonyl]indeno[1,2-*e*][1,3,4][oxadiazine-4a(3*H*)-carboxylate.'' EPA is revising the tolerance expression for existing tolerances and the proposed tolerances on garden beets and bushberries to clarify the chemical moieties that are covered by the tolerances and specify how compliance with the tolerances is to be measured. The revised tolerance expression makes clear that the tolerance covers ''residues of indoxacarb, including its metabolites and degradates,'' and that compliance with the tolerance levels will be determined by measuring only indoxacarb, (S)-methyl 7-chloro-2,5-dihydro-2-[[(methoxycarbonyl)[4-(trifluoromethoxy)phenyl]amino] carbonyl]indeno[1,2-*e*] [1,3,4][oxadiazine-4a(3*H*)-carboxylate, and its R-enantiomer, (R)-methyl 7-chloro-2,5-dihydro-2-[[(methoxycarbonyl)[4-(trifluoromethoxy)phenyl]amino] carbonyl]indeno[1,2-*e*][1,3,4] [oxadiazine-4a(3*H*)-carboxylate.

EPA has determined that it is reasonable to make this change final without prior proposal and opportunity for comment, because public comment is not necessary, in that the change has no substantive effect on the tolerance, but rather is merely intended to clarify the existing tolerance expression.

V. Conclusion

Therefore, tolerances are established for residues of indoxacarb, including its metabolites and degradates, in or on beet, garden, roots at 0.30 ppm; beet, garden, tops at 6.0 ppm; and bushberry subgroup 13–07B at 1.5 ppm. Compliance with these tolerance levels is to be determined by measuring only indoxacarb, (S)-methyl 7-chloro-2,5-dihydro-2-[[(methoxycarbonyl)[4-(trifluoromethoxy)phenyl]] amino]carbonyl]indeno[1,2-*e*][1,3,4] [oxadiazine-4a(3*H*)-carboxylate, and its R-enantiomer, (R)-methyl 7-chloro-2,5-dihydro-2-[[(methoxycarbonyl)[4-(trifluoromethoxy)phenyl]amino] carbonyl]indeno[1,2-*e*] [1,3,4][oxadiazine-4a(3*H*)-carboxylate.

VI. Statutory and Executive Order Reviews

This final rule establishes tolerances under section 408(d) of FFDCA in response to a petition submitted to the Agency. The Office of Management and Budget (OMB) has exempted these types of actions from review under Executive Order 12866, entitled *Regulatory Planning and Review* (58 FR 51735, October 4, 1993). Because this final rule has been exempted from review under Executive Order 12866, this final rule is not subject to Executive Order 13211, entitled *Actions Concerning Regulations That Significantly Affect Energy Supply, Distribution, or Use* (66 FR 28355, May 22, 2001) or Executive Order 13045, entitled *Protection of Children from Environmental Health Risks and Safety Risks* (62 FR 19885, April 23, 1997). This final rule does not contain any information collections subject to OMB approval under the Paperwork Reduction Act (PRA), 44 U.S.C. 3501 *et seq.*, nor does it require any special considerations under Executive Order 12898, entitled *Federal Actions to Address Environmental Justice in Minority Populations and Low-Income Populations* (59 FR 7629, February 16, 1994).

Since tolerances and exemptions that are established on the basis of a petition under section 408(d) of FFDCA, such as the tolerance in this final rule, do not require the issuance of a proposed rule, the requirements of the Regulatory

Flexibility Act (RFA) (5 U.S.C. 601 *et seq.*) do not apply.

This final rule directly regulates growers, food processors, food handlers, and food retailers, not States or tribes, nor does this action alter the relationships or distribution of power and responsibilities established by Congress in the preemption provisions of section 408(n)(4) of FFDCA. As such, the Agency has determined that this action will not have a substantial direct effect on States or tribal governments, on the relationship between the national government and the States or tribal governments, or on the distribution of power and responsibilities among the various levels of government or between the Federal Government and Indian tribes. Thus, the Agency has determined that Executive Order 13132, entitled *Federalism* (64 FR 43255, August 10, 1999) and Executive Order 13175, entitled *Consultation and Coordination with Indian Tribal Governments* (65 FR 67249, November 9, 2000) do not apply to this final rule. In addition, this final rule does not impose any enforceable duty or contain any unfunded mandate as described under Title II of the Unfunded Mandates Reform Act of 1995 (UMRA) (Public Law 104–4).

This action does not involve any technical standards that would require Agency consideration of voluntary consensus standards pursuant to section 12(d) of the National Technology Transfer and Advancement Act of 1995 (NTTAA), Public Law 104–113, section 12(d) (15 U.S.C. 272 note).

VII. Congressional Review Act

The Congressional Review Act, 5 U.S.C. 801 *et seq.*, generally provides that before a rule may take effect, the agency promulgating the rule must submit a rule report to each House of the Congress and to the Comptroller General of the United States. EPA will submit a report containing this rule and other required information to the U.S. Senate, the U.S. House of Representatives, and the Comptroller General of the United States prior to publication of this final rule in the **Federal Register**. This final rule is not a ''major rule'' as defined by 5 U.S.C. 804(2).

List of Subjects in 40 CFR Part 180

Environmental protection, Administrative practice and procedure, Agricultural commodities, Pesticides and pests, Reporting and recordkeeping requirements.

Dated: July 1, 2009.

G. Jeffrey Herndon,

Acting Director, Registration Division, Office of Pesticide Programs.

■ Therefore, 40 CFR chapter I is amended as follows:

PART 180—[AMENDED]

■ 1. The authority citation for part 180 continues to read as follows:

Authority: 21 U.S.C. 321(q), 346a and 371.

■ 2. Section 180.564 is amended in paragraph (a) by revising the introductory text and by alphabetically adding the following commodities to the table to read as follows:

§180.564 Indoxacarb; tolerances for residues.

(a) *General.* Tolerances are established for residues of indoxacarb, including its metabolites and degradates, in or on the commodities in the table below. Compliance with the tolerance levels specified below is to be determined by measuring only indoxacarb, (S)-methyl 7-chloro-2,5-dihydro-2-[[(methoxycarbonyl)[4-(trifluoromethoxy)phenyl] amino]carbonyl]indeno[1,2-*e*][1,3,4][oxadiazine-4a(3*H*)-carboxylate, and its R-enantiomer, (R)-methyl 7-chloro-2,5-dihydro-2-[[(methoxycarbonyl)[4-(trifluoromethoxy)phenyl]amino] carbonyl]indeno[1,2-*e*][1,3,4][oxadiazine-4a(3*H*)-carboxylate.

Commodity	Parts per million
* * * * *	
Beet, garden, roots	0.30
Beet, garden, tops	6.0
Bushberry subgroup 13–07B	1.5
* * * * *	

* * * * *

[FR Doc. E9–16368 Filed 7–9–09; 8:45 am]

BILLING CODE 6560–50–S

ENVIRONMENTAL PROTECTION AGENCY

40 CFR Part 180

[EPA–HQ–OPP–2007–0461; FRL–8422–5]

Mandipropamid; Pesticide Tolerances

AGENCY: Environmental Protection Agency (EPA).

ACTION: Final rule.

SUMMARY: This regulation establishes a tolerance for residues of mandipropamid in or on hops, dried cones. Syngenta Crop Protection, Inc. requested this tolerance under the Federal Food, Drug, and Cosmetic Act (FFDCA).

DATES: This regulation is effective July 10, 2009. Objections and requests for hearings must be received on or before September 8, 2009, and must be filed in accordance with the instructions provided in 40 CFR part 178 (see also Unit I.C. of the **SUPPLEMENTARY INFORMATION**).

ADDRESSES: EPA has established a docket for this action under docket identification (ID) number EPA–HQ–OPP–2007–0461. All documents in the docket are listed in the docket index available at *http://www.regulations.gov*. Although listed in the index, some information is not publicly available, e.g., Confidential Business Information (CBI) or other information whose disclosure is restricted by statute. Certain other material, such as copyrighted material, is not placed on the Internet and will be publicly available only in hard copy form. Publicly available docket materials are available in the electronic docket at *http://www.regulations.gov*, or, if only available in hard copy, at the OPP Regulatory Public Docket in Rm. S–4400, One Potomac Yard (South Bldg.), 2777 S. Crystal Dr., Arlington, VA. The Docket Facility is open from 8:30 a.m. to 4 p.m., Monday through Friday, excluding legal holidays. The Docket Facility telephone number is (703) 305–5805.

FOR FURTHER INFORMATION CONTACT: Rose Mary Kearns, Registration Division (7505P), Office of Pesticide Programs, Environmental Protection Agency, 1200 Pennsylvania Ave., NW., Washington, DC 20460–0001; telephone number: (703) 305–5611; e-mail address: *kearns.rosemary@epa.gov*.

SUPPLEMENTARY INFORMATION:

I. General Information

A. Does this Action Apply to Me?

You may be potentially affected by this action if you are an agricultural producer, food manufacturer, or pesticide manufacturer. Potentially affected entities may include, but are not limited to those engaged in the following activities:

- Crop production (NAICS code 111).
- Animal production (NAICS code 112).
- Food manufacturing (NAICS code 311).
- Pesticide manufacturing (NAICS code 32532).

This listing is not intended to be exhaustive, but rather to provide a guide for readers regarding entities likely to be affected by this action. Other types of entities not listed in this unit could also be affected. The North American Industrial Classification System (NAICS) codes have been provided to assist you and others in determining whether this action might apply to certain entities. If you have any questions regarding the applicability of this action to a particular entity, consult the person listed under **FOR FURTHER INFORMATION CONTACT**.

B. How Can I Access Electronic Copies of this Document?

In addition to accessing electronically available documents at *http://www.regulations.gov*, you may access this **Federal Register** document electronically through the EPA Internet under the ''**Federal Register**'' listings at *http://www.epa.gov/fedrgstr*. You may also access a frequently updated electronic version of EPA's tolerance regulations at 40 CFR part 180 through the Government Printing Office's e-CFR cite at *http://www.gpoaccess.gov/ecfr*.

C. Can I File an Objection or Hearing Request?

Under section 408(g) of FFDCA, 21 U.S.C. 346a, any person may file an objection to any aspect of this regulation and may also request a hearing on those objections. You must file your objection or request a hearing on this regulation in accordance with the instructions provided in 40 CFR part 178. To ensure proper receipt by EPA, you must identify docket ID number EPA–HQ–OPP–2007–0461 in the subject line on the first page of your submission. All requests must be in writing, and must be mailed or delivered to the Hearing Clerk as required by 40 CFR part 178 on or before September 8, 2009.

In addition to filing an objection or hearing request with the Hearing Clerk as described in 40 CFR part 178, please submit a copy of the filing that does not contain any CBI for inclusion in the public docket that is described in **ADDRESSES**. Information not marked confidential pursuant to 40 CFR part 2 may be disclosed publicly by EPA without prior notice. Submit this copy, identified by docket ID number EPA–HQ–OPP–2007–0461, by one of the following methods:

- *Federal eRulemaking Portal*: *http://www.regulations.gov*. Follow the on-line instructions for submitting comments.
- *Mail*: Office of Pesticide Programs (OPP) Regulatory Public Docket (7502P), Environmental Protection Agency, 1200 Pennsylvania Ave., NW., Washington, DC 20460–0001.
- *Delivery*: OPP Regulatory Public Docket (7502P), Environmental Protection Agency, Rm. S–4400, One Potomac Yard (South Bldg.), 2777 S. Crystal Dr., Arlington, VA. Deliveries are only accepted during the Docket Facility's normal hours of operation (8:30 a.m. to 4 p.m., Monday through Friday, excluding legal holidays). Special arrangements should be made for deliveries of boxed information. The Docket Facility telephone number is (703) 305–5805.

II. Petition for Tolerance

In the **Federal Register** of June 13, 2008, (73 FR 33814) (FRL–8367–3), EPA issued a notice pursuant to section 408(d)(3) of FFDCA, 21 U.S.C. 346a(d)(3), announcing the filing of a pesticide petition (PP 8F7342) by Syngenta Crop Protection, Inc., 410 Swing Road, P.O. Box 18300, Greensboro, NC 27419. The petition requested that 40 CFR 180.637 be amended by establishing tolerances for residues of the fungicide mandipropamid [4-chloro-N-[2-[3-methoxy-4-(2-propynyloxy)phenyl]ethyl]-a-(2-propynyloxy)-benzeneacetamide], regulated chemical, in or on hops, at 50 parts per million (ppm). That notice referenced a summary of the petition prepared by Syngenta Crop Protection, Inc, the registrant, which is available to the public in the docket, *http://www.regulations.gov*. There were no comments received in response to the notice of filing.

Based upon review of the data supporting the petition, EPA has changed the requested commodity ''hops'' to ''hop, dried cones.'' The reason for this change is explained in Unit IV.C.

III. Aggregate Risk Assessment and Determination of Safety

Section 408(b)(2)(A)(i) of FFDCA allows EPA to establish a tolerance (the legal limit for a pesticide chemical residue in or on a food) only if EPA determines that the tolerance is ''safe.'' Section 408(b)(2)(A)(ii) of FFDCA defines ''safe'' to mean that ''there is a reasonable certainty that no harm will result from aggregate exposure to the pesticide chemical residue, including all anticipated dietary exposures and all other exposures for which there is reliable information.'' This includes exposure through drinking water and in residential settings, but does not include occupational exposure. Section 408(b)(2)(C) of FFDCA requires EPA to give special consideration to exposure of infants and children to the pesticide chemical residue in establishing a tolerance and to ''ensure that there is a reasonable certainty that no harm will result to infants and children from aggregate exposure to the pesticide chemical residue....''

Consistent with section 408(b)(2)(D) of FFDCA, and the factors specified in section 408(b)(2)(D) of FFDCA, EPA has reviewed the available scientific data and other relevant information in support of this action. EPA has sufficient data to assess the hazards of and to make a determination on aggregate exposure for the petitioned-for tolerances for residues of mandipropamid on hop, dried cones at 50 ppm. EPA's assessment of exposures and risks associated with establishing tolerances follows.

A. Toxicological Profile

EPA has evaluated the available toxicity data and considered its validity, completeness, and reliability as well as the relationship of the results of the studies to human risk. EPA has also considered available information concerning the variability of the sensitivities of major identifiable subgroups of consumers, including infants and children.

Mandipropamid has low or minimal acute toxicity via the oral, dermal, and inhalation routes of exposure. It is minimally irritating to the eye and non-irritating to the skin. It is also negative for skin sensitization.

Liver toxicity was the primary effect and was observed in rats, mice, and dogs. In the 24–month rat study, nephrotoxicity was observed in males only. The lack of liver toxicity in this long-term study was probably due to the lower doses when compared with the 90–day study. In a 90–day rat study, there was slight hepatotoxicity in both

sexes; there was the suggestion of effects on the liver in the 90–day mouse study in which increased liver weights in both sexes and microscopic pathology were observed. In the 90–day dog study liver effects included increased cholesterol, increased liver weights and liver enzymes (alkaline phosphatase activity, alanine aminotransferase) and increased pigment in hepatocytes and Kupffer cells in both sexes. Additionally, centrilobular hepatocyte vacuolation in females was observed. In the combined chronic/carcinogenicity rat study, no effects on the liver were noted at doses up to and including the highest dose tested (HDT) of 61/70 mg/kg/day (M/F); however, increased nephrotoxicity occurred in males. No liver effects were observed in the mouse carcinogenicity study at doses up to 223/285 mg/kg/day (M/F). The following effects on the liver were present in the 1–year dog study: Increased incidence and severity of microscopic pigment in the liver and increased alkaline phosphatase activity in both sexes, as well as increased alanine aminotransferase activity in males. Therefore, effects on the liver of rats, mice and dogs appear within 90–days (also in the 1–year dog study); whereas, in the 24–month rat study, only nephrotoxicity was observed and, in the 18–month mouse study, only decreased body weight and food utilization was noted.

There was no evidence of teratogenicity or indications of increased neonatal sensitivity in the developmental and reproduction toxicity studies. In the rat and rabbit developmental toxicity studies, there were no treatment-related maternal or developmental effects observed up to the limit dose of 1,000 mg/kg/day. In the 2-generation rat reproduction study, the only parental/systemic effects were decreased body weights, body weight gains, food consumption and food utilization in males. No effects on reproduction were observed at any dose. Offspring effects were decreased pup body weights in both sexes, but this effect occurred at doses which also caused effects in parental animals.

Dermal exposure to mandipropamid for 28–days in the rat did not result in systemic or dermal toxicity up to the limit dose of 1000 mg/kg/day. There was no evidence of developmental effects, neurotoxicity, mutagenicity or carcinogenicity after exposure to mandipropamid.

Specific information on the studies received and the nature of the adverse effects caused by mandipropamid as well as the no-observed-adverse-effect-level (NOAEL) and the lowest-observed-adverse-effect-level (LOAEL) from the toxicity studies are discussed in the final rule published in the **Federal Register** of January 16, 2008, (73 FR 2812) (FRL–8346–6).

B. Toxicological Endpoints

For hazards that have a threshold below which there is no appreciable risk, a toxicological point of departure (POD) is identified as the basis for derivation of reference values for risk assessment. The POD may be defined as the highest dose at which no adverse effects are observed (the NOAEL) in the toxicology study identified as appropriate for use in risk assessment. However, if a NOAEL cannot be determined, the lowest dose at which adverse effects of concern are identified (the LOAEL) or a Benchmark Dose (BMD) approach is sometimes used for risk assessment. Uncertainty/safety factors (UFs) are used in conjunction with the POD to take into account uncertainties inherent in the extrapolation from laboratory animal data to humans and in the variations in sensitivity among members of the human population as well as other unknowns. Safety is assessed for acute and chronic dietary risks by comparing aggregate food and water exposure to the pesticide to the acute population adjusted dose (aPAD) and chronic population adjusted dose (cPAD). The aPAD and cPAD are calculated by dividing the POD by all applicable UFs. Aggregate short-, intermediate-, and chronic-term risks are evaluated by comparing food, water, and residential exposure to the POD to ensure that the margin of exposure (MOE) called for by the product of all applicable UFs is not exceeded. This latter value is referred to as the Level of Concern (LOC).

For non-threshold risks, the Agency assumes that any amount of exposure will lead to some degree of risk. Thus, the Agency estimates risk in terms of the probability of an occurrence of the adverse effect greater than that expected in a lifetime. For more information on the general principles EPA uses in risk characterization and a complete description of the risk assessment process, see *http://www.epa.gov/pesticides/factsheets/riskassess.htm*.

A summary of the toxicological endpoints for mandipropamid used for human risk assessment is discussed in Unit III.B. of the final rule published in the **Federal Register** of January 16, 2008.

C. Exposure Assessment

1. *Dietary exposure from food and feed uses*. In evaluating dietary exposure to mandipropamid, EPA considered exposure under the petitioned-for tolerance as well as all existing mandipropamid tolerances in (40 CFR 180.637). EPA assessed dietary exposures from mandipropamid in food as follows:

i. *Acute exposure*. Quantitative acute dietary exposure and risk assessments are performed for a food-use pesticide, if a toxicological study has indicated the possibility of an effect of concern occurring as a result of a 1–day or single exposure.

No such effects were identified in the toxicological studies for mandipropamid; therefore, a quantitative acute dietary exposure assessment is unnecessary.

ii. *Chronic exposure*. In conducting the chronic dietary exposure assessment EPA used the food consumption data from the USDA 1994–1996 and 1998 CSFII. As to residue levels in food, EPA used tolerance level residues and assumed 100 percent of all crops are treated 100 percent crop treated (PCT).

iii. *Cancer*. EPA has determined that mandipropamid classified as ''not likely to be carcinogenic to humans'' based on the absence of treatment-related increases in tumors in rat and mouse carcinogenicity studies. Therefore, there is no cancer risk associated with the proposed use of mandipropamid.

iv. *Anticipated residue and PCT information*. EPA did not use anticipated residue and/or PCT information in the dietary assessment for mandipropamid. Tolerance level residues and/or 100 PCT were assumed for all food commodities.

Section 408(b)(2)(E) of FFDCA authorizes EPA to use available data and information on the anticipated residue levels of pesticide residues in food and the actual levels of pesticide residues that have been measured in food. If EPA relies on such information, EPA must require pursuant to FFDCA section 408(f)(1) that data be provided 5 years after the tolerance is established, modified, or left in effect, demonstrating that the levels in food are not above the levels anticipated. For the present action, EPA will issue such data call-ins as are required by FFDCA section 408(b)(2)(E) and authorized under FFDCA section 408(f)(1). Data will be required to be submitted no later than 5 years from the date of issuance of these tolerances.

EPA did not use PCT information in assessing dietary exposure to mandipropamid.

2. *Dietary exposure from drinking water*. The Agency used screening level water exposure models in the dietary exposure analysis and risk assessment for mandipropamid in drinking water. These simulation models take into

account data on the physical, chemical, and fate/transport characteristics of mandipropamid. Further information regarding EPA drinking water models used in pesticide exposure assessment can be found at *http://www.epa.gov/oppefed1/models/water/index.htm*.

The Agency used the FIRST (Version 1.1.0) model for estimation of surface water and the Screening Concentration in Ground Water (SCI–GROW, Version 2.3) model, for estimation of ground water to determine estimated drinking water concentrations (EDWC) of mandipropamid.

For chronic exposures for non-cancer assessment the EDWCs are estimated to be 36.5 ppb for surface water and 2.4 ppb for ground water.

Modeled estimates of surface water drinking water concentrations were directly entered into the dietary exposure model.

For chronic dietary risk assessment, the water concentration of value 36.5 ppb was used to assess the contribution to drinking water.

3. *From non-dietary exposure*. The term ''residential exposure'' is used in this document to refer to non-occupational, non-dietary exposure (e.g., for lawn and garden pest control, indoor pest control, termiticides, and flea and tick control on pets).

Mandipropamid is not registered for any specific use patterns that would result in residential exposure.

4. *Cumulative effects from substances with a common mechanism of toxicity*. Section 408(b)(2)(D)(v) of FFDCA requires that, when considering whether to establish, modify, or revoke a tolerance, the Agency consider ''available information'' concerning the cumulative effects of a particular pesticide's residues and ''other substances that have a common mechanism of toxicity.''

EPA has not found mandipropamid to share a common mechanism of toxicity with any other substances, and mandipropamid does not appear to produce a toxic metabolite produced by other substances. For the purposes of this tolerance action, therefore, EPA has assumed that mandipropamid does not have a common mechanism of toxicity with other substances. For information regarding EPA's efforts to determine which chemicals have a common mechanism of toxicity and to evaluate the cumulative effects of such chemicals, see EPA's website at *http://www.epa.gov/pesticides/cumulative*.

D. Safety Factor for Infants and Children

1. *In general*. Section 408(b)(2)(c) of FFDCA provides that EPA shall apply an additional tenfold (10X) margin of safety for infants and children in the case of threshold effects to account for prenatal and postnatal toxicity and the completeness of the database on toxicity and exposure unless EPA determines based on reliable data that a different margin of safety will be safe for infants and children. This additional margin of safety is commonly referred to as the FQPA safety factor (SF). In applying this provision, EPA either retains the default value of 10X, or uses a different additional safety factor when reliable data available to EPA support the choice of a different factor.

2. *Prenatal and postnatal sensitivity*. There is no evidence (quantitative or qualitative) of increased susceptibility and no residual uncertainties with regard to prenatal toxicity following *in utero* exposure to rats or rabbits (developmental studies) and pre and/or post-natal exposures to rats (reproduction study).

3. *Conclusion*. EPA has determined that reliable data show the safety of infants and children would be adequately protected if the FQPA SF were reduced to 1X. That decision is based on the following findings:

i. The toxicity database for mandipropamid is not complete because an immunotoxicity study is required. Despite this data gap, EPA has concluded that the database is adequate to assess the pre- and postnatal toxicity of mandipropamid and that there is no need for an additional database uncertainty factor to account for the missing study.

EPA began requiring functional immunotoxicity testing of all food and nonfood use pesticides on December 26, 2007. This study is not yet available for mandipropamid. EPA has evaluated the available mandipropamid toxicity studies for evidence of potential immunotoxicity, including hematology, gross organ weights for spleen and thymus, clinical chemistry and histopathology, to determine if an additional database uncertainty factor is needed to account for potential immunotoxicity. The overall weight of evidence suggests that mandipropamid does not directly target the immune system. Therefore, the Agency does not believe that conducting a functional immunotoxicity study will result in a lower POD than the currently selected for overall risk assessment, and therefore, a database uncertainty (UFDB) is not needed to account for the lack of this study.

ii. There is no indication that mandipropamid is a neurotoxic chemical and there is no need for a developmental neurotoxicity study or additional UFs to account for neurotoxicity.

iii. There is no evidence that mandipropamid results in increased susceptibility in *in utero* rats or rabbits in the prenatal developmental studies or in young rats in the 2–generation reproduction study.

iv. There are no residual uncertainties identified in the exposure databases. The dietary food exposure assessments were performed based on 100 PCT and tolerance-level residues. EPA made conservative (protective) assumptions in the ground and surface water modeling used to assess exposure to mandipropamid in drinking water. These assessments will not underestimate the exposure and risks posed by mandipropamid.

E. Aggregate Risks and Determination of Safety

EPA determines whether acute and chronic pesticide exposures are safe by comparing aggregate exposure estimates to the aPAD and cPAD. The aPAD and cPAD represent the highest safe exposures, taking into account all appropriate SFs. EPA calculates the aPAD and cPAD by dividing the POD by all applicable UFs. For linear cancer risks, EPA calculates the probability of additional cancer cases given the estimated aggregate exposure. Short-, intermediate-, and chronic-term risks are evaluated by comparing the estimated aggregate food, water, and residential exposure to the POD to ensure that the MOE called for by the product of all applicable UFs is not exceeded.

1. *Acute risk*. An acute aggregate risk assessment takes into account exposure estimates from acute dietary consumption of food and drinking water. No adverse effect resulting from a single-oral exposure was identified and no acute dietary endpoint was selected. Therefore, mandipropamid is not expected to pose an acute risk.

2. *Chronic risk*. Using the exposure assumptions described in this unit for chronic exposure, EPA has concluded that chronic exposure to mandipropamid from food and water will utilize 30% of the cPAD for (children 1–2 years of age) the population group receiving the greatest exposure. There are no residential uses for mandipropamid.

3. *Short-term risk*. Short-term aggregate exposure takes into account short-term residential exposure plus chronic exposure to food and water (considered to be a background exposure level).

Mandipropamid is not registered for any use patterns that would result in

residential exposure. Therefore, a short-term aggregate risk assessment was not needed.

4. *Intermediate-term risk*. Intermediate-term aggregate exposure takes into account intermediate-term residential exposure plus chronic exposure to food and water (considered to be a background exposure level).

Mandipropamid is not registered for any use patterns that would result in intermediate-term residential exposure. Therefore, an intermediate-term aggregate risk was not needed.

5. *Aggregate cancer risk for U.S. population*. Based on the absence of treatment-related increases in tumors in rat and mouse carcinogenicity studies with mandipropamid, EPA concludes that mandipropamid does not pose a cancer risk.

6. *Determination of safety*. Based on these risk assessments, EPA concludes that there is a reasonable certainty that no harm will result to the general population, or to infants and children from aggregate exposure to mandipropamid residues.

IV. Other Considerations

A. Analytical Enforcement Methodology

Adequate enforcement methodology (liquid chromatography with tandem mass spectrometry (LC/MS/MS)) is available to enforce tolerances for mandipropamid. The method may be requested from: Chief, Analytical Chemistry Branch, Environmental Science Center, 701 Mapes Rd., Ft. Meade, MD 20755–5350; telephone number: (410) 305–2905; e-mail address: *residuemethods@epa.gov*.

B. International Residue Limits

There are no specific Codex, Canadian, or Mexican maximum residue limits (MRLs) for mandipropamid.

C. Revisions to Petitioned-For Tolerances

EPA changed the requested commodity ''hops'' to ''hop, dried cones'' to harmonize with accepted tolerance terminology.

V. Conclusion

Therefore, tolerances are established for residues of mandipropamid, [4-chloro-N-[2-[3-methoxy-4-(2-propynyloxy)phenyl]ethyl]-a-(2-propynyloxy)-benzeneacetamide in or on hop, dried cones at 50 ppm.

VI. Statutory and Executive Order Reviews

This final rule establishes tolerances under section 408(d) of FFDCA in response to a petition submitted to the Agency. The Office of Management and Budget (OMB) has exempted these types of actions from review under Executive Order 12866, entitled *Regulatory Planning and Review* (58 FR 51735, October 4, 1993). Because this final rule has been exempted from review under Executive Order 12866, this final rule is not subject to Executive Order 13211, entitled *Actions Concerning Regulations That Significantly Affect Energy Supply, Distribution, or Use* (66 FR 28355, May 22, 2001) or Executive Order 13045, entitled *Protection of Children from Environmental Health Risks and Safety Risks* (62 FR 19885, April 23, 1997). This final rule does not contain any information collections subject to OMB approval under the Paperwork Reduction Act (PRA), 44 U.S.C. 3501 *et seq.*, nor does it require any special considerations under Executive Order 12898, entitled *Federal Actions to Address Environmental Justice in Minority Populations and Low-Income Populations* (59 FR 7629, February 16, 1994).

Since tolerances and exemptions that are established on the basis of a petition under section 408(d) of FFDCA, such as the tolerance in this final rule, do not require the issuance of a proposed rule, the requirements of the Regulatory Flexibility Act (RFA) (5 U.S.C. 601 *et seq.*) do not apply.

This final rule directly regulates growers, food processors, food handlers, and food retailers, not States or tribes, nor does this action alter the relationships or distribution of power and responsibilities established by Congress in the preemption provisions of section 408(n)(4) of FFDCA. As such, the Agency has determined that this action will not have a substantial direct effect on States or tribal governments, on the relationship between the national government and the States or tribal governments, or on the distribution of power and responsibilities among the various levels of government or between the Federal Government and Indian tribes. Thus, the Agency has determined that Executive Order 13132, entitled *Federalism* (64 FR 43255, August 10, 1999) and Executive Order 13175, entitled *Consultation and Coordination with Indian Tribal Governments* (65 FR 67249, November 9, 2000) do not apply to this final rule. In addition, this final rule does not impose any enforceable duty or contain any unfunded mandate as described under Title II of the Unfunded Mandates Reform Act of 1995 (UMRA) (Public Law 104–4).

This action does not involve any technical standards that would require Agency consideration of voluntary consensus standards pursuant to section 12(d) of the National Technology Transfer and Advancement Act of 1995 (NTTAA), Public Law 104–113, section 12(d) (15 U.S.C. 272 note).

VII. Congressional Review Act

The Congressional Review Act, 5 U.S.C. 801 *et seq.*, generally provides that before a rule may take effect, the agency promulgating the rule must submit a rule report to each House of the Congress and to the Comptroller General of the United States. EPA will submit a report containing this rule and other required information to the U.S. Senate, the U.S. House of Representatives, and the Comptroller General of the United States prior to publication of this final rule in the **Federal Register**. This final rule is not a ''major rule'' as defined by 5 U.S.C. 804(2).

List of Subjects in 40 CFR Part 180

Environmental protection, Administrative practice and procedure, Agricultural commodities, Pesticides and pests, Reporting and recordkeeping requirements.

Dated: June 23, 2009.

Daniel J. Rosenblatt,

Acting Director, Registration Division, Office of Pesticide Programs.

■ Therefore, 40 CFR chapter I is amended as follows:

PART 180—[AMENDED]

■ 1. The authority citation for part 180 continues to read as follows:

Authority: 21 U.S.C. 321(q), 346a and 371.

■ 2. Section 180.637 is amended by alphabetically adding the following commodity to the table in paragraph (a) to read as follows:

§180.637 Mandipropamid; tolerances for residues.

(a) *General.* * * *

Commodity	Parts per million
* * * * *	
Hop, dried cones	50
* * * * *	

* * * * *

[FR Doc. E9–16369 Filed 7–9–09; 8:45 am]

BILLING CODE 6560–50–S

DEPARTMENT OF COMMERCE

National Oceanic and Atmospheric Administration

50 CFR Part 622

[Docket No. 040205043–4043–01]

RIN 0648–XO54

Fisheries of the Caribbean, Gulf of Mexico, and South Atlantic; Snapper–grouper Fishery of the South Atlantic; Closure of the 2009 Commercial Fishery for Golden Tilefish in the South Atlantic

AGENCY: National Marine Fisheries Service (NMFS), National Oceanic and Atmospheric Administration (NOAA), Commerce.

ACTION: Temporary rule; closure.

SUMMARY: NMFS closes the commercial fishery for golden tilefish in the exclusive economic zone (EEZ) of the South Atlantic. In addition, for a person on board a vessel for which a Federal commercial or charter vessel/headboat permit for the South Atlantic Snapper–Grouper Fishery has been issued, the provisions of the closure (restriction to the bag and possession limits and prohibition of sale or purchase) apply regardless of whether the golden tilefish are harvested in state waters or the South Atlantic EEZ. NMFS has determined that the quota for the commercial fishery for golden tilefish will have been reached by July 15, 2009. This closure is necessary to protect the golden tilefish resource.

DATES: Closure is effective 12:01 a.m., local time, July 15, 2009, through December 31, 2009.

FOR FURTHER INFORMATION CONTACT: Catherine Bruger, telephone 727–824–5305, fax 727–824–5308, e–mail *Catherine.Bruger@noaa.gov*.

SUPPLEMENTARY INFORMATION: The snapper–grouper fishery of the South Atlantic is managed under the Fishery Management Plan for the Snapper–Grouper Fishery of the South Atlantic Region (FMP). The FMP was prepared by the South Atlantic Fishery Management Council and is implemented under the authority of the Magnuson–Stevens Fishery Conservation and Management Act (Magnuson–Stevens Act) by regulations at 50 CFR part 622. Those regulations, found at 50 CFR 622.42(e)(2), set the commercial quota for golden tilefish in the South Atlantic at 295,000 lb (133,810 kg) for the current fishing year, January 1 through December 31, 2009.

Under 50 CFR 622.43(a), NMFS is required to close the commercial fishery for a species or species group when the quota for that species or species group is reached, or is projected to be reached, by filing a notification to that effect with the Office of the **Federal Register**. Based on current statistics, NMFS has determined that the available commercial quota of 295,000 lb (133,810 kg) for golden tilefish will be reached on or before July 15, 2009. Accordingly, NMFS is closing the commercial fishery for golden tilefish in the South Atlantic EEZ from 12:01 a.m., local time, on July 15, 2009, through December 31, 2009.

During the closure, the applicable bag and possession limits specified in 50 CFR 622.39(d)(1)(ii) and (d)(2), respectively, apply to all harvest or possession of golden tilefish in or from the South Atlantic EEZ, and the sale or purchase of golden tilefish taken from the EEZ is prohibited. In addition, for a person on board a vessel for which a Federal commercial or charter vessel/headboat permit for the South Atlantic Snapper–Grouper Fishery has been issued, those provisions of the closure for golden tilefish apply regardless of whether the fish are harvested in state waters or the South Atlantic EEZ. The operator of a vessel with golden tilefish in excess of the bag or possession limit aboard must have landed such golden tilefish prior to 12:01 a.m., local time, July 15, 2009, and all sale or purchase of golden tilefish must occur prior to 12:01 a.m., local time, July 15, 2009. The prohibition on sale or purchase does not apply to sale or purchase of golden tilefish that were harvested, landed ashore, and sold prior to 12:01 a.m., local time, July 15, 2009, and were held in cold storage by a dealer or processor.

Classification

This action responds to the best available information recently obtained from the fishery. The Assistant Administrator for Fisheries, NOAA, (AA), finds good cause to waive the requirement to provide prior notice and opportunity for public comment pursuant to the authority set forth at 5 U.S.C. 553(b)(B) as such prior notice and opportunity for public comment is unnecessary and contrary to the public interest. Such procedures would be unnecessary because the rule itself has already been subject to notice and comment, and all that remains is to notify the public of the closure. Allowing prior notice and opportunity for public comment is contrary to the public interest because of the need to immediately implement this action to protect the fishery since the capacity of the fishing fleet allows for rapid harvest of the quota. Prior notice and opportunity for public comment would require time and would potentially result in a harvest well in excess of the established quota.

For the aforementioned reasons, the AA also finds good cause to waive the 30-day delay in the effectiveness of this action under 5 U.S.C. 553(d)(3).

This action is taken under 50 CFR 622.43(a) and is exempt from review under Executive Order 12866.

Authority: 16 U.S.C. 1801 *et seq.*

Dated: July 7, 2009.

Kristen C. Koch,

Acting Director, Office of Sustainable Fisheries, National Marine Fisheries Service.

[FR Doc. E9–16378 Filed 7–7–09; 8:45 am]

BILLING CODE 3510–22–S

Proposed Rules

Federal Register
Vol. 74, No. 131
Friday, July 10, 2009

This section of the FEDERAL REGISTER contains notices to the public of the proposed issuance of rules and regulations. The purpose of these notices is to give interested persons an opportunity to participate in the rule making prior to the adoption of the final rules.

DEPARTMENT OF ENERGY

10 CFR Part 431

[Docket No. EERE–2008–BT–TP–0017]

RIN 1904–AB87

Energy Conservation Program for Certain Commercial and Industrial Equipment: Test Procedures for Metal Halide Lamp Ballasts

AGENCY: Office of Energy Efficiency and Renewable Energy, Department of Energy.

ACTION: Notice of proposed rulemaking.

SUMMARY: The U.S. Department of Energy (DOE) proposes to establish metal halide lamp ballast test procedures that manufacturers would use to demonstrate compliance with the metal halide ballast energy conservation standards mandated by the statute. In accordance with the Energy Policy and Conservation Act, as amended (EPCA), these test procedures are based on American National Standards Institute (ANSI) Standard C82.6–2005, ''Ballasts for High-Intensity Discharge Lamps—Method of Measurement.'' Also in accordance with EPCA, DOE proposes a test method for measuring standby mode power consumption and discusses the fact that off mode power consumption does not apply to metal halide lamp ballasts.

DATES: DOE held a public meeting on Friday, December 19, 2008, in Washington, DC. DOE began accepting comments, data, and information regarding this notice of proposed rulemaking (NOPR) at the public meeting and will continue to accept such submissions until no later than September 23, 2009. For details, see section IV, ''Public Participation,'' of this NOPR.

ADDRESSES: The public meeting was held at the U.S. Department of Energy, Forrestal Building, Room 8E–089, 1000 Independence Avenue, SW., Washington, DC 20585–0121.

Any comment submitted must identify the NOPR on Test Procedures for Metal Halide Lamp Ballasts and provide the docket number EERE–2008–BT–TP–0017 and/or Regulation Identifier Number (RIN) 1904–AB87. Comments may be submitted using any of the following methods:

- *Federal eRulemaking Portal: http://www.regulations.gov.* Follow the instructions for submitting comment.
- *E-mail: Metal_Halide_Ballasts.Rulemaking@hq.doe.gov.* Include the docket number EERE–2008–BT–TP–0017 and/or RIN 1904–AB87 in the subject line of the message.
- *Postal Mail:* Ms. Brenda Edwards, U.S. Department of Energy, Building Technologies Program, Mailstop EE–2J, 1000 Independence Avenue, SW., Washington, DC 20585–0121. Please submit one signed paper original.
- *Hand Delivery/Courier:* Ms. Brenda Edwards, U.S. Department of Energy, Building Technologies Program, 6th Floor, 950 L'Enfant Plaza, SW., Washington, DC 20024. Telephone: (202) 586–2945. Please submit one signed paper original.

For detailed instructions on submitting comment and additional information on the rulemaking process, see section IV, ''Public Participation,'' of this document.

Docket: For access to the docket to read background documents or comments received, visit the U.S. Department of Energy, Resource Room of the Building Technologies Program, 6th Floor, 950 L'Enfant Plaza, SW., Washington, DC 20024, (202) 586–2945, between 9 a.m. and 4 p.m., Monday through Friday, except Federal holidays. Please contact Ms. Brenda Edwards at the above phone number for additional information regarding visiting the Resource Room.

FOR FURTHER INFORMATION CONTACT: Ms. Linda Graves, U.S. Department of Energy, Office of Energy Efficiency and Renewable Energy, Building Technologies Program, Mailstop EE–2J, 1000 Independence Avenue, SW., Washington, DC 20585–0121. *Telephone:* (202) 586–1851. *E-mail: Linda.Graves@ee.doe.gov.* Or you may contact Mr. Eric Stas, U.S. Department of Energy, Office of the General Counsel, GC–72, 1000 Independence Avenue, SW., Washington, DC 20585–0121. *Telephone:* (202) 586–9507. *E-mail: Eric.Stas@hq.doe.gov.*

For additional information on how to submit or review public comments, contact Ms. Brenda Edwards, U.S. Department of Energy, Office of Energy Efficiency and Renewable Energy, Building Technologies Program, Mailstop EE–2J, 1000 Independence Avenue, SW., Washington, DC 20585–0121. *Telephone:* (202) 586–2945. *E-mail:Brenda.Edwards@ee.doe.gov.*

SUPPLEMENTARY INFORMATION:

I. Background and Authority
II. Summary of the Proposal
III. Discussion
A. ANSI Standards Development Process
B. Definitions
C. Test Method for Measuring Energy Efficiency of Metal Halide Ballasts
1. Test Setup and Conditions
a. Lamp Orientation
b. Power Supply, Ambient Test Temperatures, and Instrumentation
c. Lamp Stabilization
2. Test Measurements
3. Ballast Efficiency Calculation
D. Test Method for Measuring Standby Power of Metal Halide Ballasts
1. Overview of Test Method
2. Test Method and Measurements
3. Combining Measurements and Burden
E. Scope of Applicability of Standby Power Test Procedure
F. Effective Date of Standby Mode Test Method
G. Units To Be Tested
H. Submission of Data
I. Enforcement Provisions
IV. Public Participation
A. Submission of Comments
B. Issues on Which DOE Seeks Comment
1. Test Temperatures
2. Test Instrumentation and Requirements
3. Test Connections
4. Lamp Orientation
5. Lamp Seasoning and System Stabilization
6. Test Measurements
7. Applicability of Off Mode
8. Applicability of Standby Measurements
9. Definitions
10. Circuit Diagrams
11. Units To Be Tested
12. Submission of Data
13. Enforcement Provisions
V. Procedural Issues and Regulatory Review
A. Review Under Executive Order 12866
B. Review Under the Regulatory Flexibility Act
C. Review Under the Paperwork Reduction Act of 1995
D. Review Under the National Environmental Policy Act
E. Review Under Executive Order 13132
F. Review Under Executive Order 12988
G. Review Under the Unfunded Mandates Reform Act of 1995
H. Review Under the Treasury and General Government Appropriations Act, 1999
I. Review Under Executive Order 12630

J. Review Under the Treasury and General Government Appropriations Act, 2001
K. Review Under Executive Order 13211
L. Review Under Section 32 of the Federal Energy Administration Act of 1974
VI. Approval of the Office of the Secretary

I. Background and Authority

Title III of the Energy Policy and Conservation Act (42 U.S.C. 6291 *et seq.*; EPCA or the Act) sets forth a variety of provisions designed to improve energy efficiency. Part A [1] of Title III (42 U.S.C. 6291–6309) establishes the ''Energy Conservation Program for Consumer Products Other than Automobiles,'' which covers certain products, including ''metal halide lamp fixtures.'' (42 U.S.C. 6292(a)(19)) Since the metal halide lamp fixture energy conservation standards in EPCA establish a minimum efficiency for the ballasts that are incorporated into those fixtures, this test procedure addresses measurement of metal halide ballast efficiency. (42 U.S.C. 6295(hh)(1)(A))

Under the Act, the overall program consists essentially of testing, labeling, and Federal energy conservation standards. The testing requirements consist of DOE test procedures, adopted pursuant to EPCA, that manufacturers of covered equipment must use as the basis for establishing and certifying to DOE that their equipment complies with applicable energy conservation standards promulgated under EPCA and for representing the efficiency of this equipment. Similarly, DOE must use these test procedures to determine whether the equipment complies with EPCA standards.

Under 42 U.S.C. 6293, EPCA sets forth generally applicable criteria and procedures for DOE's adoption and amendment of such test procedures. EPCA provides that ''[a]ny test procedures prescribed or amended under this section shall be reasonably designed to produce test results which measure energy efficiency, energy use, * * * or estimated annual operating cost of a covered product during a representative average use cycle or period of use, as determined by the Secretary [of Energy], and shall not be unduly burdensome to conduct.'' (42 U.S.C. 6293(b)(3))

For metal halide lamp ballasts, section 324(c) of the Energy Independence and Security Act of 2007 (EISA 2007), Public Law 110–140, amended EPCA, and, in relevant part, required DOE to establish test procedures for metal halide ballasts—a newly covered equipment type under the statute—as follows: ''(18) Metal halide lamp ballasts.—Test procedures for metal halide lamp ballasts shall be based on ANSI Standard C82.6–2005, entitled 'Ballasts for High-Intensity Discharge Lamps—Method of Measurement'.'' (42 U.S.C. 6293(b)(18))

Section 324(e) of EISA 2007 further amended EPCA to prescribe mandatory minimum efficiency levels for pulse-start metal halide ballasts, magnetic probe-start ballasts, and nonpulse-start electronic ballasts that operate lamps rated greater than or equal to 150 watts (W) but less than or equal to 500 W. (42 U.S.C. 6295(hh)(1)(A)) Excluded from these energy conservation standards are regulated lag ballasts,[2] electronic ballasts that operate at 480 volts, or ballasts in fixtures that are: (1) Rated only for 150 W lamps; (2) rated for use in wet locations, as specified by the National Electrical Code 2002, section 410.4(A); and (3) contain a ballast that is rated to operate at ambient air temperatures above 50 °C, as specified by UL 1029–2001. (42 U.S.C. 6295(hh)(1)(B)) These statutory standards apply to metal halide lamp fixtures manufactured on or after January 1, 2009. (42 U.S.C. 6295(hh)(1)(C))

DOE again notes that because of the codification of the metal halide ballast provisions at 42 U.S.C. 6295, a rulemaking for metal halide ballast energy conservation standards is subject to the requirements of the consumer products provisions of Part A of Title III. However, because metal halide ballasts are generally considered to be commercial equipment and consistent with DOE's previous action to incorporate requirements of the Energy Policy Act of 2005 (EPACT 2005) for commercial equipment into 10 CFR Part 431 (''Energy Efficiency Program for Certain Commercial and Industrial Equipment''), DOE intends to place the new requirements for metal halide ballasts in 10 CFR part 431 for ease of reference. DOE notes that the location of the provisions within the CFR does not affect either the substance or applicable procedure for metal halide ballasts; as such, DOE is placing them in the appropriate CFR part based on the nature or type of those products. Based upon their placement into 10 CFR 431, metal halide ballasts will be referred to as ''equipment'' throughout this notice.

DOE notes that pursuant to section 310 of EISA 2007, the Department's test procedure for all covered products must account for standby and off mode energy consumption, including the procedure for metal halide ballasts. (42 U.S.C. 6295(gg)(2)) Furthermore, section 310 of EISA 2007 provides that any final rule establishing or revising energy conservation standards that is adopted on or after July 1, 2010, must incorporate standby mode and off mode energy use. (42 U.S.C. 6295(gg)(3)(A)) A DOE test procedure to measure standby mode and off mode energy use must be in place to allow manufacturers to measure and certify to energy conservation standards that address these modes and is included in this proposed test procedure.

II. Summary of the Proposal

As noted above, EPCA, as amended by EISA 2007, states that test procedures for metal halide lamp ballasts shall be based on ANSI Standard C82.6–2005, ''Ballasts for High Intensity Discharge Lamps—Method of Measurement.'' [3] (42 U.S.C. 6293(b)(18)) DOE reviewed ANSI Standard C82.6–2005 and found it suitable for the purposes of metal halide ballasts, because it contained all of the required major elements to adequately test and measure the efficiency of this equipment, as discussed in section III.C of this document. Accordingly, DOE has drawn on relevant portions of ANSI Standard C82.6–2005 in developing its proposed test procedures for metal halide ballasts. Specifically, today's NOPR references the ballast power loss measurement method (section 6.10) of ANSI Standard C82.6–2005 as the means of determining the efficiency of metal halide lamp ballasts, and it references other applicable sections of ANSI Standard C82.6–2005 for test conditions and setup. This NOPR also proposes test procedures for measuring standby mode power consumption, based on relevant portions of ANSI Standard C82.6–2005. Finally, this NOPR proposes sampling and efficiency calculations to be used in the required testing.

The proposed test procedures apply to metal halide ballasts that operate lamps rated greater than or equal to 150 W but less than or equal to 500 W. DOE discusses its proposal in detail in the following sections. DOE invites public comment, particularly on the key issues outlined in section IV.E.

DOE reviewed the definitions of ''standby mode'' and ''off mode'' contained in EPCA in the context of metal halide ballasts. (42 U.S.C. 6295(gg)(1)) DOE found that while it was possible for metal halide ballasts to

[1] This part was originally titled Part B; however, it was redesignated Part A, after Part B of Title III was repealed by Public Law 109–58.

[2] A ''regulated lag ballast'' is the industry term for a lag ballast with a third coil for improved lamp power regulation.

[3] ANSI standards discussed in this document are available for purchase at: *http://webstore.ansi.org/*.

operate in standby mode, the off mode condition does not apply to metal halide ballasts because it addresses a mode of energy use in which metal halide ballasts do not operate. For this reason, today's notice proposes a test method for metal halide ballasts that measures power consumed in standby mode (*see* section III.D) and provides an opportunity for the public to comment on DOE's rationale for why off mode does not apply to such equipment (*see* section III.B).

As amended, EPCA provides that amendments to the test procedures to include standby mode and off mode energy consumption shall not be used to determine compliance with previously established standards. (42 U.S.C. 6295(gg)(2)(C)) Thus, the proposed inclusion of a standby mode test procedure in today's notice will not affect a manufacturer's ability to demonstrate compliance with the energy conservation standards for metal halide lamp fixtures that take effect January 1, 2009. Indeed, the standby mode test procedure need not be performed to determine compliance with the statutory energy conservation standards for metal halide lamp fixtures because the statutory standards do not account for standby mode power consumption. The Department's test procedures for measuring standby mode would become effective, in terms of adoption into the Code of Federal Regulations, 30 days after the date of publication in the **Federal Register** of the final rule in this test procedures rulemaking. Manufacturers would be required to use the test procedures' standby mode provisions to demonstrate compliance with any future energy conservation standards on the effective date of a final rule establishing amended standards for metal halide lamp ballasts that addresses standby mode power consumption. The introductory sentence in proposed section 431.324(c) would be removed in a notice of final rulemaking to amend the existing standards for metal halide lamp ballasts.

III. Discussion

DOE reviewed ANSI Standard C82.6–2005 to determine whether any additional elements would be needed to provide a complete test procedure. DOE concluded that all elements required for conducting a measurement of the efficiency of metal halide ballasts are currently present in ANSI Standard C82.6–2005, including lamp orientation, power supply characteristics, operational test temperatures, instrumentation requirements, setup connections, and lamp stabilization. DOE proposes to incorporate these applicable requirements and methods into the DOE test procedure. DOE notes that it is proposing a statistically meaningful method for determining sample size as part of the metal halide ballast test procedure, consistent with the sampling methods used for DOE test procedures for products and equipment subject to energy conservation standards.

A. ANSI Standards Development Process

DOE reviewed the process that the American National Standards Institute (ANSI) follows in support of the development of ANSI accredited standards and finds that it embodies all the elements of a thorough public review and consensus process. This thorough process is conducted by applicable industry groups so that all materially affected and interested parties are informed and may participate. Due process is the key to ensuring that ANSI standards are developed in an environment that is equitable, accessible, and responsive to the input and concerns of various stakeholders. It also serves and protects the public interest, since standards developed and accredited by ANSI must meet the Institute's requirements for openness, balance, consensus, and other due process safeguards. The basic elements of the American National Standards Institute process include:

- Consensus on a proposed standard by a group or ''consensus body'' that includes representatives from materially affected and interested parties;
- Broad-based public review and comment on draft standards;
- Consideration of and response to comments submitted by voting members of the relevant consensus body and by public review;
- Incorporation of approved changes into a draft standard; and
- Right to appeal by any participant that believes that due process principles were not sufficiently respected during the standards development in accordance with the ANSI-accredited procedures of the standards developer.

The ANSI process serves all standardization efforts in the United States by providing and promoting a process that withstands scrutiny while protecting the rights and interests of every participant. DOE believes this process ensures that ANSI standards and the provisions within them are adequately vetted within the industry and represent consensus among all materially affected and interested parties. Therefore, DOE proposes the adoption of appropriate and relevant sections of the ANSI Standard C82.6–2005 as part of the test procedures for metal halide lamp ballasts, with only minimal additional analysis.

B. Definitions

DOE reviewed the relevant portions of EISA 2007 and 10 CFR part 431 for applicable existing definitions for use in developing and applying the metal halide ballast test procedure. EISA 2007 amends EPCA, in part, by adding definitions of key terms that are applicable to the metal halide ballast test procedure, including ''ballast,'' ''ballast efficiency,'' ''electronic ballast,'' ''metal halide ballast,'' ''metal halide lamp,'' ''metal halide lamp fixture,'' ''probe-start metal halide ballast,'' and ''pulse-start metal halide ballast.'' (42 U.S.C. 6291) These terms are defined as follows:

''Ballast'' means a device used with an electric discharge lamp to obtain necessary circuit conditions (voltage, current, and waveform) for starting and operating. (42 U.S.C. 6291(58))

''Ballast efficiency'' means, in the case of a high-intensity discharge fixture, the efficiency of a lamp and ballast combination, expressed as a percentage, and calculated in accordance with the following formula: Efficiency = P_{out}/P_{in}, where P_{out} equals the measured operating lamp wattage, P_{in} equals the measured operating input wattage, and the lamp, and the capacitor, when the capacitor is provided, shall constitute a nominal system in accordance with the ANSI Standard C78.43–2004. For ballasts with a frequency of 60 Hz, P_{in} and P_{out} shall be measured after lamps have been stabilized according to section 4.4 of ANSI Standard C82.6–2005 using a wattmeter with accuracy specified in section 4.5 of ANSI Standard C82.6–2005. For ballasts with a frequency greater than 60 Hz, P_{in} and P_{out} shall have a basic accuracy of ±0.5 percent at the higher of—(1) 3 times the output operating frequency of the ballast; or (2) 2 kHz for ballasts with a frequency greater than 60 Hz. (42 U.S.C. 6291(59))

''Electronic ballast'' means a device that uses semiconductors as the primary means to control lamp starting and operation. (42 U.S.C. 6291(60)) DOE understands that this definition appropriately includes equipment commonly referred to as ''nonpulse-start electronic ballasts.''

''Metal halide ballast'' means a ballast used to start and operate metal halide lamps. (42 U.S.C. 6291(62))

''Metal halide lamp'' means a high-intensity discharge lamp in which the major portion of the light is produced by radiation of metal halides and their products of dissociation, possibly in

combination with metallic vapors. (42 U.S.C. 6291(63))

''Metal halide lamp fixture'' means a light fixture for general lighting application designed to operate with a metal halide lamp and a ballast for a metal halide lamp. (42 U.S.C. 6291(64))

''Probe-start metal halide ballast'' means a ballast that (1) starts a probe-start metal halide lamp that contains a third starting electrode (probe) in the arc tube, and (2) does not generally contain an igniter, but instead starts lamps with high ballast open circuit voltage. (42 U.S.C. 6291(65))

''Pulse-start metal halide ballast'' means an electronic or electromagnetic ballast that starts a pulse-start metal halide lamp with high voltage pulses. (42 U.S.C. 6291(66))

Although the new statutory definitions pertaining to ballasts were relatively comprehensive, DOE believes that additional definitions are necessary for purposes of the metal halide ballast test procedure. Therefore, in this NOPR, DOE is proposing to amend 10 CFR 431.322, ''Definitions concerning metal halide lamp ballasts and fixtures,'' by adding a definition for ''basic model'' as it relates to metal halide ballasts. As explained below, DOE also proposes to insert definitions for ''active mode,'' ''standby mode,'' ''off mode,'' ''AC control signal,'' ''DC control signal,'' ''PLC control signal,'' and ''wireless control signal.'' EPCA lists definitions for three modes of energy consumption that are applicable to a broad set of consumer products and commercial equipment, including metal halide ballasts. (42 U.S.C. 6295(gg)(1)(A)) The EPCA definitions of ''active mode,'' ''standby mode,'' and ''off mode'' are discussed in this section, and their applicability to metal halide ballasts is addressed.

The ''basic model'' definition for metal halide ballasts is based on the ''basic model'' definition for fluorescent ballasts. DOE proposes to define the term ''basic model,'' with respect to metal halide ballasts, as all units of a given type of metal halide ballast (or class thereof) that: (1) Are rated to operate a given lamp type and wattage; (2) have essentially identical electrical characteristics; and (3) have no differing electrical, physical, or functional characteristics that affect energy consumption.

''Active mode'' is defined under EPCA as ''the condition in which an energy-using product—(I) is connected to a main power source; (II) has been activated; and (III) provides 1 or more main functions.'' (42 U.S.C. 6295(gg)(1)(A)(i)) DOE interprets this mode as being applicable to all metal halide ballasts, where the main function of the metal halide lamp ballast is to operate one or more metal halide lamps (*i.e.,* starting the lamp and regulating the current, voltage, or power of the lamp). DOE understands that there are many different types of ballasts that could be considered ''metal halide ballasts,'' but the main function common to all of them is that they are designed to operate metal halide lamps. DOE does not discriminate between non-dimmable [4] and dimmable [5] ballasts when considering active mode; rather, DOE interprets active mode as being applicable to any amount of rated system light output (*i.e.,* greater than zero percent of the rated system light output). Again, this is because a ballast's main function is the operation of a metal halide lamp.

''Standby mode'' is defined under EPCA as ''the condition in which an energy-using product—(I) is connected to a main power source; and (II) offers 1 or more of the following user-oriented or protective functions: (aa) To facilitate the activation or deactivation of other functions (including active mode) by remote switch (including remote control), internal sensor, or timer. (bb) Continuous functions, including information or status displays (including clocks) or sensor-based functions.'' (42 U.S.C. 6295(gg)(1)(A)(iii)) As discussed below, two key aspects of this definition relate to metal halide ballasts: (1) Connected to a main power source; and (2) offering the activation or deactivation of other functions by remote switch.

The definition of ''standby mode'' in part requires that ballasts be connected to their main power source. (42 U.S.C. 6295(gg)(1)(A)(iii)(I)) This ''connected'' requirement effectively precludes the majority of ballasts from having standby mode energy consumption, because most ballasts are operated with on-off switches, circuit breakers, or other relays that disconnect the ballast from the main power source. Although further consideration of such ballasts is unnecessary because their operational design falls outside the statutory definition of ''standby mode,'' DOE would characterize their operation in such situations as follows: Once the ballast is disconnected from the main power source, the ballast ceases to operate the lamp (*i.e.,* the system light output falls to zero), and the ballast consumes no energy. The vast majority of metal halide ballasts do not consume power when they are switched off. Based upon the statutory definition of ''standby mode,'' ballasts controlled by disconnecting the ballast from the main power source do not operate in standby mode.

The ''standby mode'' definition further states that it applies to energy-using products that facilitate the activation or deactivation of other functions by remote switch, internal sensor, or timer. (42 U.S.C. 6295(gg)(1)(A)(iii)(II)(aa)) DOE interprets this condition as applying to ballasts that are designed to operate in, or function as, a lighting control system where auxiliary control devices send signals. An example of this type of ballast would be one that incorporates a digital addressable lighting interface (DALI) capability. These ballasts (whether dimming or not) incorporate an electronic circuit that enables the ballast to communicate with, and receive orders from, the DALI system. These instructions could tell the ballast to go into active mode or to adjust the light output to zero percent output. In this latter condition, the ballast is no longer providing current to the metal halide lamp (*i.e.,* no longer in active mode). Thus, at zero light output, the ballast is standing by, connected to a main power source while it awaits instructions from the lighting control system to initiate an arc so the metal halide lamp can produce light again. Another example would be a metal halide ballast that incorporates a lighting control circuit that is connected to a photosensor. This ballast and sensor function as a miniature lighting controls system, whereby the sensor provides input to the ballast control circuit, which determines whether the lamp should be operational or not. When the lamp is not operational (*i.e.,* when the photosensor indicates that it is bright outside), the ballast will consume power to enable the photosensor circuit to continuously monitor the ambient conditions. When the circuit determines that it has gotten dark and it is time to start the lamp, it will instruct the ballast to initiate an arc in the lamp.

DOE invites comment on its proposed approach to treat metal halide ballasts that operate in, or function as, a lighting control system that receives signals from auxiliary control devices as being capable of operating in standby mode.

''Off mode'' is defined by EPCA as ''the condition in which an energy-using product—(I) is connected to a main power source; and (II) is not providing any standby or active mode function.'' (42 U.S.C. 6295(gg)(1)(A)(ii)) DOE considered this definition in the context

[4] Non-dimmable ballasts would operate the lamp or lamps in active mode at 100 percent of the rated system light output.

[5] Dimmable ballasts may vary the system light output from 100 percent to some lower level of light output, either in steps or continuously.

of metal halide ballasts and believes that off mode does not apply to any metal halide ballast, dimmable or non-dimmable, because off mode describes a condition that commercially available ballasts do not attain.

The definition of ''off mode'' requires that ballasts be connected to a main power source and not provide any standby or active mode function. (42 U.S.C. 6295(gg)(1)(A)(ii)) DOE does not believe it is possible for ballasts to meet these criteria. As described above, active mode encompasses conditions in which the ballast operates a lamp or lamps to produce greater than zero percent of the rated system light output. Standby mode applies to the situation in which the ballast is connected to a main power source and is not operating a lamp or lamps (*i.e.,* the lamps have zero percent light output). Therefore, when connected to a main power source, the functions provided in standby mode and active mode already encompass every possible level of ballast operation, from zero to greater than zero percent of system rated light output. There is no condition in which the ballast is connected to the main power source and it is not already accounted for in either active mode or standby mode. For this reason, ballasts fail to meet the second requirement of the EPCA definition of off mode, that it is not providing any standby or active mode function. (42 U.S.C. 6295(gg)(1)(A)(ii)(II))

Furthermore, the power consumption measurement of the ballast in standby mode already captures the device in its lowest power-consuming condition. This means that in standby mode, the ballast is connected to a main power source, but is not providing any output to the lamps (*i.e.,* zero percent light output). Disconnecting the ballast from the main power source by a switch, for example, would bring the ballast to a lower state of energy use (*i.e.,* zero percent power consumption), and would fail to meet the first criterion of the off mode definition, that the ballast be connected to a main power source. (42 U.S.C. 6295(gg)(1)(A)(ii)(I))

For some products, DOE is interpreting off mode as a condition in which the user may choose to operate a manual switch mounted on the device to enable off mode, which would represent the lowest energy state. However, this condition does not apply to metal halide ballasts, and DOE is not aware of any ballasts manufactured with a manual switch mounted on the housing. Instead, these ballasts are usually inaccessible to end-users, and do not incorporate manual switches or other features that users may operate to affect the mode of the ballast. Thus, the lowest energy state of a metal halide lamp ballast is that which is measured in standby mode, which by definition cannot also constitute off mode.

For all of the reasons discussed above, DOE is unable to identify a situation in which a ballast would be in off mode. Therefore, DOE tentatively concluded in today's notice that off mode is inapplicable to metal halide lamp ballasts. Should circumstances change in the future, DOE may revisit this interpretation and propose a test method to measure off mode for metal halide ballasts. DOE invites comment on its tentative decision not to incorporate a test method for measuring off mode energy consumption for metal halide ballasts at this time.

DOE is proposing in today's notice to define the term ''AC control signal.'' DOE finds that some lighting control systems operate by communicating with (*i.e.,* providing a control signal to) the ballasts over a separate wiring system using AC voltage. DOE was unable to locate a definition for ''AC control signal'' in International Electrotechnical Commission (IEC) Standard 62301 or ANSI Standard C82.6–2006. Therefore, DOE prepared a definition for an ''AC control signal'' to enhance the clarity and understanding of its proposed test procedure. The proposed definition for ''AC control signal'' is as follows: ''an alternating current (AC) signal that is supplied to the ballast using additional wiring for the purpose of controlling the ballast and putting the ballast in standby mode.'' In today's test procedure, DOE proposes to measure the power consumed by the ballast through the control signal wiring system.

DOE is proposing in today's notice to define the term ''DC control signal.'' DOE finds that some lighting control systems operate by communicating with (*i.e.,* providing a control signal to) the ballasts over a separate wiring system using DC voltage. DOE was unable to locate a definition for ''DC control signal'' in IEC Standard 62301 or ANSI Standard C82.6–2006. Therefore, DOE prepared a definition for a ''DC control signal'' to enhance the clarity and understanding of its proposed test procedure. The proposed definition of ''DC control signal'' states that it is ''a direct current (DC) signal that is supplied to the ballast using additional wiring for the purpose of controlling the ballast and putting the ballast in standby mode.'' In today's test procedure, DOE proposes to measure the power consumed by the ballast through the control signal wiring system.

DOE is proposing in today's notice to define the term ''power line carrier (PLC) control signal.'' DOE finds that some lighting control systems operate by communicating with (*i.e.,* providing a control signal to) the ballasts over the existing power lines that provide the main power connection to the ballast. DOE was unable to locate a definition for ''PLC control signal'' in IEC Standard 62301 or ANSI Standard C82.6–2006. Therefore, DOE prepared a definition for a ''PLC control signal'' to enhance the clarity and understanding of its proposed test procedure. The proposed definition of a ''PLC control signal'' states that it is ''a power line carrier (PLC) signal that is supplied to the ballast using the input ballast wiring for the purpose of controlling the ballast and putting the ballast in standby mode.'' In today's test procedure, DOE proposes to measure the power consumed by the ballast through the PLC control signal.

DOE is proposing in today's notice to define the term ''wireless control signal.'' DOE finds that some lighting control systems operate by communicating with (*i.e.,* providing a control signal to) the ballasts over a wireless system, much like a wireless computer network. DOE was unable to locate a definition for a ''wireless control signal'' in IEC Standard 62301 or ANSI Standard C82.6–2006. Therefore, DOE prepared a definition for a ''wireless control signal'' to enhance the clarity and understanding of its proposed test procedure. The proposed definition of ''wireless control signal'' states that it is ''a wireless signal that is radiated to and received by the ballast for the purpose of controlling the ballast and putting the ballast in standby mode.'' In today's test procedure, DOE is not proposing to measure the power consumed by the ballast through the wireless control signal, because the quantity of power contained in the signal is extremely small (on the order of milliwatts), would be difficult to measure, and is unlikely to appreciably impact ballast power consumption.

DOE determined in its review of the proposed metal halide ballast test procedures that other terms used in the procedure are standard industry terminology and, thus, do not need to be explicitly defined in the ballast test procedure. DOE finds these terms to be unambiguous and easy to apply consistently in metal halide ballast testing. DOE invites comment on the appropriateness of adopting the aforementioned definitions for ''basic model,'' ''active mode,'' ''standby mode,'' ''off mode,'' ''AC control signal,'' ''DC control signal,'' ''PLC

control signal'' and ''wireless control signal.''

C. Test Method for Measuring Energy Efficiency of Metal Halide Ballasts

1. Test Setup and Conditions

a. Lamp Orientation

DOE proposes that lamp orientation for testing be as specified in section 4.3 of ANSI Standard C82.6–2005, which requires vertical, base-up orientation, unless the manufacturer specifies another orientation for that ballast and associated lamp combination. DOE is proposing this approach for two reasons. First, DOE understands that vertical, base-up lamp orientation is the most common in the industry, and, because of the natural stability of the vertical operating position, DOE believes that this approach would produce the most repeatable and accurate testing results. By way of explanation, the halide material in a metal halide lamp is not fully vaporized during lamp operation, which creates a cold spot in the arc tube that affects the photometric and electrical characteristics of the lamp and ballast operation. The cold spot is typically found at the lowest point in the tube, which is the most consistent in a vertical burning orientation. In contrast, horizontal orientation creates a less stable arc condition. ANSI Standard C82.6–2005 references specific requirements in section 3.6 of ANSI Standard C78.389–2004, ''Lamp Position,'' for stabilization when the lamp manufacturer specifies horizontal orientation. In these cases, ANSI Standard C78.389–2004 requires that metal halide lamps with tipped arc tubes be oriented horizontally with the tip in the up position. If the lamp has a tipless arc tube, the lamp must be kept horizontally level and in the same position throughout all measurements to ensure repeatability and consistency in measurements. Given the concerns with repeatability and consistency associated with testing a metal halide lamp in a horizontal orientation and the lack of any relevant benefit from testing in such orientation, DOE is proposing to test in a vertical, base-up orientation. DOE invites comment on the appropriateness of adopting the requirements in section 4.3 of ANSI Standard C82.6–2005 for lamp orientation.

b. Power Supply, Ambient Test Temperatures, and Instrumentation

DOE proposes power supply characteristics, ambient test temperatures, and instrumentation requirements as specified in section 4.0 of ANSI Standard C82.6–2005. DOE recognizes that specification of objective test setup characteristics is an important consideration in terms of producing reliable, repeatable, and consistent test results. These aspects of DOE's proposal are addressed in further detail below.

Section 4.1 of ANSI Standard C82.6–2005 requires that the root mean square (RMS) summation of harmonic components in the power supply be no more than 3 percent of the fundamental voltage and frequency components. Section 4.1 also requires that: (1) The impedance of the power source be no more than 3 percent of the specified ballast impedance, and (2) power supply devices used in the test circuits have a power rating at least five times the wattage of the lamp intended to operate on the ballast under test. DOE believes that these requirements provide reasonable stringency in terms of power quality because they are consistent with other comprehensive industry standards that regulate harmonic content and power supply impedance (*e.g.*, ANSI Standard C78.389–2004). Furthermore, DOE believes that these requirements would be readily achievable and that they would be likely to ensure repeatable and consistent measurements. DOE invites comment on the appropriateness of adopting section 4.1 of ANSI C82.6–2005 for power supply requirements.

Section 4.2 in ANSI Standard C82.6–2005 requires maintenance of an ambient temperature of 25 °C ±5 °C to reduce potential ballast operating variances caused by excessive temperature. DOE proposes to require that testing be performed in a draft-free environment, which is considered a standard laboratory environmental condition and would further ensure consistency in test conditions. Although ambient temperature is not considered critical to metal halide lamp operation and light output, it can affect lamp and ballast system electrical performance. Therefore, temperatures must be controlled for ballast efficiency testing to ensure repeatability and consistency in test results. DOE believes that applying the ambient temperature requirements, as set forth in the industry standard, in a draft-free environment would result in appropriate testing conditions. DOE invites comment on the appropriateness of adopting section 4.2 of ANSI C82.6–2005 for ambient temperature requirements.

Similarly, the instrumentation requirements and their connections to the lamp and ballast systems are specified to ensure repeatability and consistency in test measurements. The instrumentation requirements prescribed in sections 4.5.1 and 4.5.3 of ANSI Standard C82.6–2005 were developed to ensure that the measured values accurately reflect ballast operation. The ANSI requirements for digital voltmeters, ammeters, and wattmeters include a resolution of three and one-half digits and minimum basic instrumentation accuracy of 0.50 percent (*i.e.*, one-half of 1 percent) of the reading from actual with true RMS capability. For analog instruments, the ANSI standard specifies that analog ammeters and voltmeters must have accuracies of ±0.50 percent up to 800 Hertz, and that analog wattmeters must have accuracies of ±0.75 percent up to 1,000 Hertz for power factors of 50 percent to 100 percent and ±0.50 percent up to 125 Hertz for ballasts with power factors between 0 and 20 percent. On this issue, DOE is concerned that the range of possible power factors covered by ANSI Standard C82.6–2005 does not provide measuring instrument accuracies for any ballasts that may be designed with power factors between 20 percent and 50 percent. Therefore, DOE is proposing to require all analog wattmeters used on ballasts with power factors less than 50 percent to same accuracy as those for ballasts with power factors less than 20 percent (*i.e.*, ±0.50 percent up to 125 Hertz). Finally, section 4.5.1 instructs that only one analog instrument may be connected to the test circuit at one time to reduce impedance effects on the testing. DOE believes that all these instrumentation requirements, as set forth in ANSI Standard C86.5–2005, would facilitate repeatable and consistent testing and measurement. DOE invites comment on the appropriateness of adopting sections 4.5.1 and 4.5.3 of ANSI C82.6–2005 for equipment and connection requirements.

In summary, the power supply characteristics, ambient test temperatures, and instrumentation and test circuit connection requirements that DOE is proposing in this NOPR are derived from ANSI Standard C82.6–2005 and are consistent with those commonly found and described in other lamp and ballast testing standards used by the lighting industry, such as ANSI Standard C78.389–2004. Accordingly, DOE tentatively concluded that these test setup conditions are appropriate for effective testing. DOE requests comment on whether these or other test setup conditions may be more appropriate for this metal halide ballast test procedure.

c. Lamp Stabilization

As an initial matter, DOE proposes that the process for lamp stabilization before ballast efficiency testing would

follow section 4.4 of ANSI Standard C82.6–2005, which requires a 100-hour seasoning period. DOE believes that a 100-hour seasoning period is commonly used by manufacturers of high-intensity discharge lamp technologies to ensure that the initial, more-rapid depreciation in output caused by impurities has been surpassed.[6] DOE has no knowledge of an alternative seasoning time period that is more appropriate for this technology. DOE invites comment on the existence and appropriateness of any alternatives to this method of lamp seasoning.

DOE evaluated the requirements of the basic stabilization method prescribed in section 4.4.2 of ANSI Standard C82.6–2005 to ensure that the method was capable of providing a sufficiently stable lamp and ballast system, as would ensure consistent measurements. Specifically, section 4.4.2 requires that the lamp and ballast system reach operating stability such that the electrical parameters cease to change. The time to achieve this point is typically at least 30 minutes, but it may take as much as 6 hours to achieve this state if a metal halide lamp is moved while hot or its orientation is changed. This methodology incorporates a standby ballast to help stabilize the lamp without heating the test ballast. (Heating the test ballast could cause resistance changes that lead to unrepeatable test results.)

DOE also considered similar stabilization guidance found in ANSI Standard C78.389–2004 that applies more specific operating times, including a generic minimum of 6 hours for basic stabilization for all lamps. Section 3.7.2 of ANSI Standard C78.389–2004 also prescribes that the lamp ballast system is stable when the lamp's electrical characteristics vary by no more than 3 percent in three consecutive 10- to 15-minute intervals.

Because not all lamps will require a full 6-hour stabilization period, DOE proposes that the lamp and ballast system be considered stable for testing purposes when the lamp's electrical characteristics vary by no more than 3 percent in three consecutive 10- to 15-minute intervals measured after the minimum 30-minute warm-up period specified in section 4.4.2 of ANSI Standard C82.6–2005. A critical part of this methodology is the ability to switch from the standby ballast to the test ballast without allowing the lamp to extinguish. The use of a standby ballast for warming up the lamp is not DOE's preferred method, but in cases where switching without extinguishing the lamp is not possible, the alternative stabilization method described in section 4.4.3 of ANSI Standard 82.6–2005 should be used. This method allows for the lamp to operate on the test ballast for a 15-minute warm-up period and measurements to be taken within the following 2 minutes, but it also requires that lamp operating characteristics be determined separately on a reference ballast.

DOE invites comment on its proposed lamp stabilization methods from sections 4.4.2 and 4.4.3 of ANSI C82.6–2005 and any alternative options for accurate ballast testing.

2. Test Measurements

DOE proposes that test measurements of metal halide ballast operation be used in the calculation of ballast efficiency, as discussed in section III.C.3, ''Ballast Efficiency Calculation,'' of this document. This calculated ballast efficiency is an integral part of the metal halide ballast test procedures established under 42 U.S.C. 6293.

Under DOE's proposal, the test measurements for metal halide ballasts would require that ballast operation testing be conducted according to the same requirements as set forth in section 6.10, ''Ballast Power Loss,'' of ANSI Standard C82.6–2005. This section specifies measurements of output power to the lamp and input power to the ballast using a wattmeter. ANSI Standard C82.6–2005, section 6.10, specifies the proper instrument connections. The section also provides the needed guidance and methods for eliminating or compensating for the power consumption of a voltmeter (when connected) and the wattmeter potential coil. In summary, section 6.10 of ANSI Standard C82.6–2005 provides a measurement of power using a well-defined, common electrical industry standard test with dedicated equipment. DOE is not aware of any equivalent alternative method for these measurements. DOE invites comment and data on whether an alternative power measurement method should be considered.

3. Ballast Efficiency Calculation

DOE proposes that the ballast efficiency be calculated as the measured output power to the lamp divided by the measured input power to the ballast (P_{out}/P_{in}). DOE proposes that the P_{out} and P_{in} terms be determined according to the Ballast Power Loss method described in section III.C.2, ''Test Measurements,'' of this document. This measure of efficiency represents the metric used in the energy conservation standard prescribed by the statute. (42 U.S.C. 6295(hh)(1)) Therefore, DOE proposes that both output and input power be measured in accordance with section 6.10 of ANSI Standard C82.6–2005, which requires the use of a true RMS wattmeter. DOE invites comment on the proposed ballast efficiency calculation and any appropriate alternative options.

D. Test Method for Measuring Standby Power of Metal Halide Ballasts

1. Overview of Test Method

EPCA, in relevant part, directs DOE to establish test procedures to include standby mode, ''taking into consideration the most current versions of Standards 62301 and 62087 of the International Electrotechnical Commission.'' (42 U.S.C. 6295(gg)(2)(A)) IEC Standard 62087 applies to audio, video, and related equipment, but not to lighting equipment. Thus, DOE has determined that IEC Standard 62087 is not suitable to be applied to this rulemaking. Instead, DOE developed today's proposed rule consistent with procedures outlined in IEC Standard 62301. In addition, to develop a test method that would be familiar to metal halide ballast manufacturers, DOE also referenced language and methodologies presented in ANSI Standard C82.6–2005, ''Ballasts for High-Intensity Discharge Lamps—Methods of Measurement.''

In overview, today's proposed test procedure for measuring standby power consumption consists of the following steps: (1) A signal is sent to the ballast instructing it to reduce light output to zero percent; (2) The main input power to the ballast is measured; and (3) The power from the control signal path is measured in one of three ways, depending on how the signal from the control system is delivered to the ballast. Further details on this proposed methodology are presented below.

2. Test Method and Measurements

In the portion of the proposed metal halide ballast test procedure dealing with standby power measurement, the test procedure would direct the technician to send a signal to the ballast under test, instructing the ballast to have zero percent light output using the appropriate communication protocol or system for that unit. Next, the technician would measure the input power (in watts) to the ballast in accordance with ANSI Standard C82.6–2005. Finally, the technician would

[6] IESNA LM–54–99, ''Lamp Seasoning,'' is the Lighting Measurement (LM) document developed by the Illuminating Engineering Society of North America (IESNA) that the industry refers to for seasoning requirements for lamp and ballast photometric and electrical testing. Available at: *http://www.ies.org/shop/*.

measure the power from the ballast control signal path using a method for an AC control signal path, a DC control signal path, or a power line carrier control signal path, consistent with the type of path that the ballast employs.

The measurement of input power to the ballast from the main electricity supply during standby mode is based on the approach in ANSI Standard C82.6–2005, section 6. This measurement parallels the approach DOE is proposing for measuring the active mode power consumption for input power (watts) to the ballast in accordance with ANSI Standard C82.6–2005. Thus, the test measurements of ballast input power would be required to be conducted in accordance with the appropriate sections of the current industry test method.

As proposed at 10 CFR 431.324(c), the proposed test procedure would direct manufacturers to address measurement of the ballast's control signal power. As DOE understands it, there are four possible ways of delivering a control signal to a metal halide lamp ballast: (1) A dedicated AC control signal wire; (2) a dedicated DC control signal wire; (3) a PLC control signal over the main supply input wires; and (4) a wireless control signal. DOE is interested in measuring the power consumed by the lighting control signal, and, therefore, proposes three methods for measuring that power, depending on which type of system is being used. As explained above, DOE is not proposing to measure the power supplied to a ballast using the fourth approach (*i.e.*, the wireless control signal), because DOE estimates that the power supplied to a ballast using a wireless signal would be very small (well below 1.0 watt), would be difficult to measure, and would be unlikely to appreciably impact ballast power consumption. The three circuit diagrams in the proposed test procedure direct the technician to measure the control signal power using either a wattmeter (for the AC control signal wiring and the PLC control signal) or a voltmeter and ammeter (for the DC control signal). DOE is proposing to incorporate three circuit diagrams at 10 CFR 431.324(c) to clearly present the intended method of measurement for each type of control system communication protocol.

DOE invites stakeholder comments on the proposed method for measuring the power consumed by the control signal system while the ballast is in standby mode.

3. Combining Measurements and Burden

DOE's metal halide ballast test procedure would direct manufacturers of such equipment to take the two required measurements (*i.e.*, the main input power and the control signal power in standby mode), but it would not tell manufacturers how to combine these values or use them in equations pertaining to energy efficiency. Instead, DOE intends to study how best to use these measurements of standby mode power consumption in a separate rulemaking to review and possibly amend the energy conservation standards for metal halide lamp ballasts, which DOE is required to complete by January 1, 2012, pursuant to EISA 2007. Although beyond the scope of the present rulemaking, DOE invites comment on recommended approaches for combining these measurements into a single metric as part of a future energy conservation standards rulemaking.

DOE further notes that the proposed test procedure is designed to produce results that measure standby power consumption in an accurate and repeatable manner, and should not be unduly burdensome on manufacturers to conduct. DOE believes that these objectives would be met by the proposed test procedure, particularly given that it is based upon IEC Standard 62301 and follows testing approaches used in ANSI Standard C82.6–2005. DOE invites comment on the issue of test burden, including whether there are any alternatives that would generate results with the same level of accuracy and repeatability while reducing the burden.

E. Scope of Applicability of Standby Power Test Procedure

This rulemaking addresses ballasts that operate metal halide lamp fixtures. After studying the market of commercially-available metal halide ballasts and the statutory definition of ''standby mode,'' DOE is proposing to interpret this mode as only applying to certain ballasts under certain operating conditions. DOE believes standby mode only applies to ballasts that incorporate some kind of lighting control system interface, because these ballasts appear to be the only ones that satisfy the EPCA definition of ''standby mode'' (which DOE is codifying into its regulations). Specifically, DOE found that only metal halide ballasts with a lighting-control system interface can be ''connected to a main power source'' and ''facilitate the activation or deactivation of other functions (including active mode) by remote switch (including remote control), internal sensor, or timer.'' (42 U.S.C. 6295(gg)(1)(A)(iii)) DOE understands that many of these ballasts are designed with advanced circuitry that adds new features, including intelligent operation.[7] One example of these ballasts would be a DALI-enabled ballast. DALI-enabled ballasts have internal circuitry that is fundamentally part of the ballast design that remains active and consumes energy, even when the ballast is not operating any lamps.

If, on the other hand, these same ballasts were dimmed to a level less than full output, but greater than zero percent, they could not be in standby mode because they would still be providing a ballast's main function (*i.e.*, operating a lamp to produce light). (42 U.S.C. 6295(gg)(1)(A)(i)) Such ballast would be deemed to be in active mode even if the quantity of light produced was just one percent of the rated system output.

As explained above, not all metal halide ballasts would need to be tested for standby mode power, because many ballast designs would not meet the statutory definition for operation in standby mode. In fact, the vast majority of metal halide ballasts sold today are not capable of operating in standby mode, thereby rendering the standby provisions of the test procedure inapposite in terms of those units. Generally, these excluded ballasts are ones that are not active components of a lighting control system; instead, they are controlled simply by having the active power disconnected through use of a manual switch, occupancy sensor, or other system. For these ballasts, light output is reduced to zero percent by disconnecting the main power. However, the ballast would not be in standby mode, as defined by EPCA, because it is no longer connected to a main power source.

Thus, DOE believes that the metal halide ballasts subject to standby mode power measurements would be those that incorporate some electronic circuit enabling the ballast to communicate with and be part of a lighting control system. DOE invites comment as to the proposed scope of applicability of this metal halide ballast test procedure and whether there are other considerations that would lead to the potential coverage of additional or fewer ballast types under the standby mode

[7] ''Intelligent operation'' means a device which is able to receive information, evaluate that information, and take appropriate action based upon that information. For example, certain ballasts contain a circuit which, when it receives a signal, then takes action to dim light output to a certain level or to switch off the lamp (or other action).

measurement portion of the test procedure.

F. Effective Date of Standby Mode Test Method

As discussed in section II of this notice, EPCA requires DOE to consider standby mode and off mode for all energy conservation final rules issued after July 1, 2010. (42 U.S.C. 6295(gg)(3)(A)) In addition, EPCA states that not later than January 1, 2012, DOE shall publish a final rule to determine whether the standards established for metal halide lamp fixtures should be amended. (42 U.S.C. 6295(hh)(2)) Due to the fact that this rulemaking, to possibly amend the standards for metal halide lamp fixtures, would be issued after July 1, 2010, DOE must take into consideration standby and off mode energy consumption in that future energy conservation standards rulemaking.

DOE believes that in having these test procedure provisions included in the CFR, it will provide manufacturers additional time to become familiar with energy consumption of certain metal halide ballasts. In the coming years, as DOE conducts its energy conservation standards rulemaking reviewing the energy conservation standards for metal halide lamp ballasts, it will take into consideration energy consumption. During that rulemaking, stakeholders will already be familiar with the test procedure for measuring and calculating standby mode power consumption and will be able to better understand any ballast design implications that may impact the efficiency of metal halide lamp ballasts.

As discussed in section II above and as provided in the proposed amendments at 10 CFR 431.324(c), manufacturers of metal halide lamp ballasts would not need to perform standby measurements under this test procedure to certify compliance with the energy conservation standards for metal halide lamp fixtures that come into effect on January 1, 2009, because those statutory standards do not account for standby mode power consumption. In terms of publication in the Code of Federal Regulations, the effective date of this test procedure on metal halide lamp fixtures would be 30 days after the date of publication in the **Federal Register** of a final rule in this test procedures rulemaking. However, manufacturers would only be required to use the amended test procedure's standby mode provisions to demonstrate compliance with any future energy conservation standard on the effective date of a final rule establishing amended standards for metal halide lamp ballasts that addresses standby mode power consumption (at which time, DOE would remove the limitation in 10 CFR 431.324(c)).

G. Units To Be Tested

Accurate testing of metal halide ballasts require a statistically meaningful sample of test units to provide sufficient assurance that the true mean efficiency of a basic model meets or exceeds the applicable energy conservation standard. In efforts to meet this testing need and to reduce the testing burden on manufacturers, DOE considered four factors in developing sample size requirements: (1) Providing a highly statistically valid probability that a basic model that is tested meets applicable energy conservation standards; (2) providing a highly statistically valid probability that a manufacturer preliminarily found to be in noncompliance will actually be in noncompliance; (3) assuring compatibility with other sampling plans DOE has promulgated; and (4) minimizing manufacturers' testing time and costs.

Based on the consideration of these four factors and an analysis of sampling methods used for DOE test procedures for products and equipment subject to energy conservation standards, DOE considered three alternatives for the specification of test sample size for metal halide ballast equipment: (1) Test every unit to determine with 100 percent certainty that each one complies with the statute; (2) test a predetermined number of units to yield a high level of statistical confidence; and (3) test until a determination can be made that a basic model does, or does not, comply.

The first alternative is not practical for small equipment with high-volume production, such as lighting ballasts, because this would require extensive tests of each product, which would not be cost-effective. The second alternative would likely require more testing than needed to reach statistical confidence for this equipment because any predetermined number would necessarily be conservatively high. In the third alternative, the size of the total sample is not determined in advance. Instead, the criteria are set to ensure that the final set of samples tested will represent a statistically significant mean efficiency value at a prescribed confidence level. Under this approach, the manufacturer selects a sample at random from a production line (not fewer than four units) and, after each unit or group of units is tested, either accepts the sample, rejects the sample, or continues testing additional samples until a sample size is reached that meets the confidence interval requirements. This method often permits reaching a statistically valid decision on the basis of fewer tests than fixed number sampling.

After careful consideration of the available alternatives, DOE is proposing to adopt the sampling procedure described in detail below for metal halide ballast energy efficiency. The proposed procedure is consistent with the approach DOE has adopted for fluorescent lamp ballasts. The proposed procedure would require randomly selecting and testing a sample of production units (not fewer than four) of a representative basic model. A simple average of the values would be calculated, which would be the actual mean value of the sample. For each representative model, a sample of sufficient size, no less than four, would be selected at random and tested to ensure that the calculated value of energy efficiency is no less than: (1) The lower of the mean of the sample; or (2) the lower 99 percent confidence limit of the mean of the entire population of that basic model, divided by a coefficient applicable to the represented value. The coefficients are intended to reasonably reflect variations in material and in the manufacturing and testing processes. This statistical process applies an industry standard 99 percent confidence level that is commonly used for evaluation of large populations and is the confidence level applied to other DOE test procedures for products and equipment subject to energy conservation standards, such as compact fluorescent lamps and external power supplies.

DOE invites comment and data on the accuracy and burden of this sampling plan, as well as recommendations on any improvements or alternatives to this approach. DOE is particularly interested in comment on whether the proposed statistical sampling plan, which is based on the current sampling plan used by DOE for fluorescent lamp ballasts, is appropriate for testing metal halide lamp ballasts. DOE asks stakeholders to pay close attention to the proposed confidence interval requirements and coefficients proposed for the equipment and to provide comment on their applicability to metal halide ballasts.

H. Submission of Data

Submission of data certifying the testing in accordance with the required Federal testing procedure will be required for metal halide ballasts, once a Federal energy conservation standard becomes effective for this equipment. For metal halide ballasts, DOE proposes to apply the same basic certification and

data submission requirements currently in place for other similar products and equipment.

To comply with data submission requirements, DOE proposes that the manufacturer, or other entity performing the test on behalf of the manufacturer, would be required to provide certification in a report submitted before [*1 year after publication of the Final Rule*], which would include for each basic model the following information: (1) The equipment type; (2) manufacturer's name; (3) private labeler's name(s) (if applicable); and (4) manufacturer's model number(s). The report would be required to certify that the testing was completed in accordance with the applicable test requirements prescribed in 42 U.S.C. 6293(b) of EPCA, as amended. Any change to a basic model that changes energy consumption constitutes a new basic model. If such a change reduces consumption, the new model would be considered in compliance with the standard without any additional testing. However, if such a change increases consumption while meeting the standard, then all certification information applicable to testing of the new basic model would be required to be submitted. *See also* section V.C. of this notice regarding compliance with the Paperwork Reduction Act of 1995.

DOE invites comment on the completeness, applicability, and burden of this proposed data submission plan as well as recommendations on any improvements or alternatives to this approach.

I. Enforcement Provisions

Once a Federal energy conservation standard becomes effective for metal halide ballasts, the enforcement of the appropriate application of the testing procedure for this equipment would be subject to enforcement of the efficiency requirements and verification of the documented testing. DOE proposes to apply to metal halide ballasts the same basic requirements for enforcement currently in place for other lighting equipment. DOE will review the testing certification.

If DOE receives written information about the performance of metal halide ballasts indicating that one or more basic models may not be in compliance with the energy conservation standard, DOE may conduct independent testing of those basic models. The results of this testing would serve as the basis for any enforcement actions related to the application of these metal halide ballast test procedures.

DOE invites comment on the proposed enforcement provisions as well as recommendations on any improvements or alternatives to this approach.

IV. Public Participation

The entire record of this proposed rulemaking, including the transcript from the public meeting, is available for inspection at the U.S. Department of Energy, Resource Room of the Building Technologies Program, 6th Floor, 950 L'Enfant Plaza, SW., Washington, DC 20024, (202) 586–2945, between 9 a.m. and 4 p.m., Monday through Friday, except Federal holidays. The official transcript is also posted on the DOE Web site at: *http://www.eere.energy.gov/buildings/appliance_standards.* Anyone may purchase a copy of the transcript from the transcribing reporter.

A. Submission of Comments

DOE will accept comment, data, and information about the proposed rule no later than the date provided at the beginning of this notice. Any comment submitted must identify the NOPR on Test Procedures for Metal Halide Lamp Ballasts, provide the docket number EERE–2008–BT–TP–0017 and/or RIN 1904–AB87. Electronic comments, data, and information submitted to DOE's e-mail address for this rulemaking should be provided in WordPerfect, Microsoft Word, PDF, or text (ASCII) file format. Stakeholders should avoid the use of special characters or any form of encryption, and wherever possible, comments should carry the electronic signature of the author. Comments, data, and information submitted to DOE via mail or hand delivery/courier should include one signed paper original. No telefacsimiles will be accepted.

Comment should address specific issues within the proposed metal halide ballast test procedures and identify the language or technical point of concern. Technical analysis, data, or precedence information should be provided to support the position offered in the comment. Specific changes to the technical requirements or language should be presented, where appropriate.

Pursuant to 10 CFR 1004.11, anyone submitting information that he or she believes to be confidential and exempt by law from public disclosure should submit two copies: one copy of the document including all the information believed to be confidential, and one copy of the document without the information believed to be confidential. DOE will make its own determination as to the confidential status of the information and treat it accordingly.

Factors of interest to DOE when evaluating requests to treat submitted information as confidential include: (1) A description of the items; (2) whether and why such items are customarily treated as confidential within the industry; (3) whether the information is generally known by or available from other sources; (4) whether the information has previously been made available to others without obligation concerning its confidentiality; (5) whether the submitting person would suffer competitive injury from public disclosure; (6) when such information might lose its confidential character due to the passage of time; and (7) why disclosure of the information would be contrary to the public interest.

B. Issues on Which DOE Seeks Comment

As noted above, EISA 2007 requires that metal halide ballast efficiency testing be based on ANSI Standard C82.6–2005. This statutory directive allows DOE some latitude in adopting the most appropriate requirements for the proposed metal halide ballast test procedure. In such cases, DOE invites comment and data on the applicability of the metal halide ballast test procedure. Also, because the proposed metal halide ballast test procedures will become codified under 10 CFR Part 431, and will be covered under sampling, certification, and other established regulatory protocols, DOE seeks comment on these matters. Although comments are welcome on all aspects of this rulemaking, DOE is particularly interested in comment on the following issues:

1. Test Temperatures

DOE invites comment and data on the applicability of the proposed ambient test temperature requirements, based on section 4.2 in ANSI Standard C82.6–2005. In particular, DOE is interested in comment on whether a different set of ambient test conditions might be more appropriate for metal halide ballast testing. *See* section III.C.1 for a discussion of the proposed ambient temperature conditions.

2. Test Instrumentation and Requirements

DOE invites comment and data on the applicability of the proposed instrumentation requirements for power supplies, wattmeters, voltmeters, and ammeters required for testing, based on the requirements in section 4.0 of ANSI Standard C82.6–2005. *See* section III.C.1 for a discussion of the instrumentation requirements.

DOE especially invites comment on the issue of the applicability of the proposed measurement accuracy ±0.50 percent up to 125 Hertz for ballasts with power factors between 20 and 50

percent, because ANSI Standard C82.6–2005 does not provide an accuracy value for the proposed instrumentation for these power factors. *See* section III.C.1 for a discussion of the proposed instrumentation requirements.

3. Test Connections

DOE invites comment on the applicability of the proposed test circuit connection requirements, based on sections 4.5 and 6.10 of ANSI Standard C82.6–2005. *See* section III.C.1 for a discussion of the proposed test circuit connections.

4. Lamp Orientation

DOE invites comment on the appropriateness of the lamp orientation requirements as specified in section 4.3 of ANSI Standard C82.6–2005 that require vertical base up unless the manufacturer specifies another orientation for that ballast and associated lamp combination. DOE also seeks comment on whether a preferred lamp orientation approach exists within the industry for lamp ballast testing. *See* section III.C.1 for a discussion of the proposed lamp orientation requirements.

5. Lamp Seasoning and System Stabilization

DOE invites comment and data on the applicability of the proposed lamp seasoning and system stabilization requirements that follow the ANSI Standard C82.6–2005 requirement for a 100-hour seasoning period and the stabilization method in either section 4.4.2 or 4.4.3 of ANSI Standard C82.6–2005, with additional methods from ANSI Standard C78.389–2004. DOE is particularly interested in whether a preferred lamp seasoning or lamp stabilization approach exists within the industry. *See* section III.C.1 for a discussion of the proposed lamp seasoning and system stabilization conditions.

6. Test Measurements

DOE invites comment and data on the applicability of the proposed measurement of ballast power losses in accordance with section 6.10 of ANSI Standard C82.6–2005, which requires the use of a true RMS wattmeter with basic accuracy of 0.50 percent. DOE is particularly interested in whether a preferred ballast power-loss measurement approach exists within the industry for metal halide lamps. *See* section III.C.2 for a discussion of the proposed testing measurements.

7. Applicability of Off Mode

DOE invites comment on its approach for assessing metal halide ballast operation in active mode, standby mode, and off mode, as those terms are defined in EPCA. In particular, DOE invites comment on its tentative conclusion that off mode does not apply to metal halide lamp ballasts at this time, and, therefore, should not be included as part of this proposed test procedure. *See* section III.B for a discussion of off mode.

8. Applicability of Standby Measurements

DOE invites comment on its proposed approach to apply the standby mode provisions of this test procedure to all metal halide lamp ballasts that incorporate some form of electronic circuit that enables the ballast to communicate with and be part of a lighting control system. Although all metal halide ballasts would be subject to the test procedure generally, only these types would be subject to the test procedure's standby mode power consumption provisions. *See* section III.E for a discussion of the proposed scope of the test procedure's standby power provisions.

9. Definitions

DOE invites comment on the definitions for the following eight new terms that DOE is proposing to add to 10 CFR part 431: AC control signal, active mode, basic model, DC control signal, off mode, PLC control signal, standby mode, and wireless control signal. *See* section III.B for a discussion of the proposed definitions.

10. Circuit Diagrams

DOE invites comments on its proposed test method and measurements for metal halide ballasts, which provide the step-by-step procedure and circuit diagrams necessary for measuring the power (in watts) consumed by the main power input to the ballast, and the control signal wire (if any). *See* sections III.C and D for a discussion of the proposed circuit diagrams.

11. Units To Be Tested

DOE invites comment and data on the accuracy and applicability of the proposed sampling for metal halide ballasts. DOE seeks comment on whether an alternative sampling method exists that might be more appropriate for metal halide ballasts. *See* section III.G for a discussion of the proposed sampling size method.

12. Submission of Data

DOE invites comment on the potential impact of applying the submission of data requirements described in other DOE test procedures for products and equipment subject to energy conservation standards as it applies to metal halide ballasts. DOE seeks comment on whether an alternative set of submission requirements exists that might be more appropriate for metal halide ballasts. *See* section III.H for a discussion of the proposed submission of data requirements.

13. Enforcement Provisions

DOE invites comment on the potential impact of applying the enforcement provisions described in other DOE test procedures for products and equipment subject to energy conservation standards as they apply to metal halide ballasts. *See* section III.I for discussion of the proposed enforcement provisions.

V. Procedural Issues and Regulatory Review

A. Review Under Executive Order 12866

Today's proposed regulatory action is not a ''significant regulatory action'' under section 3(f) of Executive Order 12866, ''Regulatory Planning and Review.'' 58 FR 51735 (Oct. 4, 1993). Accordingly, this proposed regulatory action was not subject to review under the Executive Order by the Office of Information and Regulatory Affairs (OIRA) in the Office of Management and Budget (OMB).

B. Review Under the Regulatory Flexibility Act

The Regulatory Flexibility Act (5 U.S.C. 601 *et seq.*, as amended by the Small Business Regulatory Enforcement Fairness Act of 1996), requires preparation of an initial regulatory flexibility analysis for any rule that by law must be proposed for public comment, unless the agency certifies that the proposed rule, if promulgated, will not have a significant economic impact on a substantial number of small entities. A regulatory flexibility analysis examines the impact of the rule on small entities and considers alternative ways of reducing negative impacts. Also, as required by Executive Order 13272, ''Proper Consideration of Small Entities in Agency Rulemaking,'' 67 FR 53461 (August 16, 2002), DOE published procedures and policies on February 19, 2003, to ensure that the potential impacts of its rules on small entities are properly considered during the DOE rulemaking process. 68 FR 7990. DOE made its procedures and policies available on the Office of the

General Counsel's Web site at *http://www.gc.doe.gov*.

Today's NOPR proposes test procedures that would be used to determine compliance with an energy conservation standard for certain metal halide lamp fixtures. DOE reviewed today's NOPR under the provisions of the Regulatory Flexibility Act and the policies and procedures published on February 19, 2003. DOE concludes and certifies that this rulemaking would not have a significant economic impact on a substantial number of small entities producing metal halide lamp fixtures covered in this rulemaking, for the reasons that follow.

The proposed test procedure incorporates by reference provisions from ANSI Standard C82.6–2005 for the measurement of ballast efficiency. ANSI Standard C82.6–2005 is the current and active industry testing standard for metal halide lamp ballasts. In referencing this industry test method, DOE anticipates that there would be no incremental increase in testing cost or burden for covered products. Manufacturers are familiar with the application of ANSI Standard C82.6–2005 and would have the equipment necessary to conduct the performance measurements. Furthermore, DOE understands that manufacturers of covered equipment are using this industry test method when they make any representation of their product's efficiency in the public domain.

Today's NOPR also proposes a methodology for the measurement of standby mode power consumption for certain metal halide lamp fixtures. DOE based its proposed method on techniques and approaches in ANSI Standard C82.6–2005 and IEC Standard 62301. DOE uses the same test equipment, accuracy requirements, and test conditions from ANSI Standard C82.6–2005. Although DOE is unaware of any metal halide lamp ballasts commercially available today that are capable of operating in standby mode, ballasts incorporating features that may encounter standby mode may enter the market as they have for fluorescent lamp ballasts. Due to the fact that DOE's proposed method is based on the industry standards and does not exceed any equipment or accuracy requirements contained therein, DOE does not believe the standby mode test procedure will add significant costs. Of the two measurements required in the standby mode test procedure, the P_{in} measurement is common to both the active mode and the standby mode test procedure. Measurement of the control signal is a minimal additional test, but one that technicians can conduct with measurement equipment readily available.

Accordingly, DOE does not find that the test procedures proposed today would result in any significant increase in testing or regulatory compliance costs. For this reason, DOE concludes and certifies that this rulemaking would not impose a significant impact on a substantial number of small businesses manufacturing metal halide lamp fixtures. Accordingly, DOE has not prepared a regulatory flexibility analysis for this rulemaking. DOE's certification and supporting statement of factual basis will be provided to the Chief Counsel for Advocacy of the Small Business Administration for review under 5 U.S.C. 605(b).

C. Review Under the Paperwork Reduction Act of 1995

The proposed rule would require each manufacturer of metal halide fixtures (*i.e.,* fixtures that incorporate metal halide ballasts), or entity performing tests on behalf of the manufacturer, to maintain records about how they determined the energy efficiency and standby power mode energy consumption measurement of their products (*see* proposed regulatory language at 10 CFR Part 431, Subpart T). The proposed rule also would require each manufacturer to make a one-time submission, stating in essence that it is complying with the applicable energy conservation standards and test procedures, in addition to certification reports that set forth the energy performance of each basic model that it manufactures. The certification reports are submitted one time for each basic model, either when the requirements go into effect or when the manufacturer begins distribution of a new basic model. The proposed collections of information are necessary for implementing and monitoring compliance with the efficiency standards and testing requirements for metal halide fixtures, as mandated by EPCA. Manufacturers would become subject to these reporting and certification requirements once both a final rule for the metal halide ballast test procedure and a final rule for the metal halide ballast energy conservation standard are effective.

While interested persons are invited to comment on the proposed certification and recordkeeping requirements for metal halide fixtures to be codified at 10 CFR Part 431 that are presented in today's NOPR, DOE also will separately publish in the **Federal Register** a notice pursuant to 44 U.S.C. 3506(c)(2) that invites public comment on this proposed collection of information. After considering any comments, DOE will submit the proposed collection of information to OMB for clearance pursuant to the Paperwork Reduction Act of 1995 (44 U.S.C. 3501 *et seq.*). DOE will subsequently publish another **Federal Register** notice informing the public when the collection of information request has been submitted to OMB for review and clearance. An agency may not conduct or sponsor, and a person is not required to respond to, a collection of information unless it displays a currently valid OMB control number. The effective date of the reporting and certification requirements, as set forth in this proposed rule, will be announced either in the test procedure final rule or in a separate **Federal Register** document.

DOE estimates the total annual reporting and recordkeeping burden imposed on manufacturers of metal halide fixtures by today's proposed rule would be 23,680 hours per year. DOE estimates that the number of covered manufacturing firms would be approximately 148, and the total annual record-keeping burden from compliance with the proposed rule would be 160 hours per company. Thus, 148 firms × 160 hours per firm = 23,680 hours per year.

In developing this burden estimate, DOE considered that each manufacturer is required to comply with the energy conservation standards for metal halide fixtures set by the statute for ballasts manufactured on or after the effective date of the relevant statutory provisions (*i.e.,* January 1, 2009). DOE understands that manufacturers already maintain the types of records the proposed rule would require them to keep. The Department believes the collection of information required by this proposed rule is the least burdensome method of meeting the statutory requirements and achieving the program objectives of the DOE compliance certification program for these products and equipment.

D. Review Under the National Environmental Policy Act

In this notice, DOE is proposing a metal halide ballast test procedure that it expects would be used to develop and implement future energy conservation standards for metal halide lamp ballasts. DOE has determined that this proposed rule falls into a class of actions that are categorically excluded from review under the National Environmental Policy Act of 1969 (Pub. L. 91–190, codified at 42 U.S.C. 4321 *et seq.*) and DOE's implementing regulations at 10 CFR part 1021. Specifically, this proposed rule would adopt existing

industry ballast test procedures, so it would not affect the amount, quality, or distribution of energy usage, and therefore, would not result in any environmental impacts. Thus, this rulemaking is covered by the Categorical Exclusion A6 under 10 CFR part 1021, subpart D.[8] Accordingly, neither an environmental assessment nor an environmental impact statement is required.

E. Review Under Executive Order 13132

Executive Order 13132, ''Federalism,'' 64 FR 43255 (August 10, 1999), imposes certain requirements on agencies formulating and implementing policies or regulations that preempt State law or that have Federalism implications. The Executive Order requires agencies to examine the constitutional and statutory authority supporting any action that would limit the policymaking discretion of the States, and to carefully assess the necessity for such actions. The Executive Order also requires agencies to have an accountable process to ensure meaningful and timely input by State and local officials in developing regulatory policies that have Federalism implications. On March 14, 2000, DOE published a statement of policy describing the intergovernmental consultation process that it will follow in developing such regulations. 65 FR 13735. DOE examined this proposed rule and determined that it would not have a substantial direct effect on the States, on the relationship between the national government and the States, or on the distribution of power and responsibilities among the various levels of government. Accordingly, Executive Order 13132 requires no further action.

F. Review Under Executive Order 12988

With respect to the review of existing regulations and the promulgation of new regulations, section 3(a) of Executive Order 12988, ''Civil Justice Reform,'' 61 FR 4729 (Feb. 7, 1996), imposes on Federal agencies the duty to: (1) Eliminate drafting errors and ambiguity; (2) write regulations to minimize litigation; (3) provide a clear legal standard for affected conduct rather than a general standard; and (4) promote simplification and burden reduction. Section 3(b) of Executive Order 12988 specifically requires that Executive agencies make every reasonable effort to ensure that the regulation specifies the following: (1) The preemptive effect, if any; (2) any effect on existing Federal law or regulation; (3) a clear legal standard for affected conduct while promoting simplification and burden reduction; (4) the retroactive effect, if any; (5) definitions of key terms; and (6) other important issues affecting clarity and general draftsmanship under any guidelines issued by the Attorney General. Section 3(c) of Executive Order 12988 requires Executive agencies to review regulations in light of applicable standards in sections 3(a) and 3(b) to determine whether they are met or whether it is unreasonable to meet one or more of them. DOE completed the required review and determined that, to the extent permitted by law, this proposed rule meets the relevant standards of Executive Order 12988.

G. Review Under the Unfunded Mandates Reform Act of 1995

Title II of the Unfunded Mandates Reform Act of 1995 (UMRA) (Pub. L. 104–4, codified at 2 U.S.C. 1501 *et seq.*) requires each Federal agency to assess the effects of Federal regulatory actions on State, local, and Tribal governments and the private sector. For regulatory actions likely to result in a rule that may cause expenditures by State, local, and Tribal governments, in the aggregate, or by the private sector of $100 million or more in any 1 year (adjusted annually for inflation), section 202 of UMRA requires a Federal agency to publish a written statement that estimates the resulting costs, benefits, and other effects on the national economy. (2 U.S.C. 1532(a) and (b)) UMRA requires a Federal agency to develop an effective process to permit timely input by elected officers of State, local, and Tribal governments on a proposed ''significant intergovernmental mandate.'' UMRA also requires an agency plan for giving notice and opportunity for timely input to small governments that may be potentially affected before establishing any requirement that might significantly or uniquely affect them. On March 18, 1997, DOE published a statement of policy on its process for intergovernmental consultation under UMRA. 62 FR 12820. (This policy is also available at *http://www.gc.doe.gov.*) Today's proposed rule contains neither an intergovernmental mandate nor a mandate that may result in the expenditure of $100 million or more in any year, so these requirements do not apply.

H. Review Under the Treasury and General Government Appropriations Act, 1999

Section 654 of the Treasury and General Government Appropriations Act, 1999 (Pub. L. 105–277) requires Federal agencies to issue a Family Policymaking Assessment for any rule that may affect family well-being. Today's NOPR to amend DOE test procedures would not have any impact on the autonomy or integrity of the family as an institution. Accordingly, DOE has concluded that it is not necessary to prepare a Family Policymaking Assessment.

I. Review Under Executive Order 12630

Pursuant to Executive Order 12630, ''Governmental Actions and Interference with Constitutionally Protected Property Rights,'' 53 FR 8859 (March 15, 1988), DOE determined that this proposed rule would not result in any takings that might require compensation under the Fifth Amendment to the U.S. Constitution.

J. Review Under the Treasury and General Government Appropriations Act, 2001

Section 515 of the Treasury and General Government Appropriations Act, 2001 (Pub. L. 106–554, codified at 44 U.S.C. 3516 note) provides for agencies to review most disseminations of information to the public under information quality guidelines established by each agency pursuant to general guidelines issued by OMB. OMB's guidelines were published at 67 FR 8452 (Feb. 22, 2002), and DOE's guidelines were published at 67 FR 62446 (Oct. 7, 2002). DOE has reviewed today's NOPR under the OMB and DOE guidelines and concluded that it is consistent with applicable policies in those guidelines.

K. Review Under Executive Order 13211

Executive Order 13211, ''Actions Concerning Regulations That Significantly Affect Energy Supply, Distribution, or Use,'' 66 FR 28355 (May 22, 2001), requires Federal agencies to prepare and submit to OMB a Statement of Energy Effects for any proposed significant energy action. A ''significant energy action'' is defined as any action by an agency that promulgated a final rule or is expected to lead to promulgation of a final rule, and that: (1) Is a significant regulatory action under Executive Order 12866, or any successor order; and (2) is likely to have a significant adverse effect on the supply, distribution, or use of energy; or (3) is designated by the Administrator of OIRA as a significant energy action. For

[8] Categorical Exclusion A6 provides, ''Rulemakings that are strictly procedural, such as rulemaking (under 48 CFR part 9) establishing procedures for technical and pricing proposals and establishing contract clauses and contracting practices for the purchase of goods and services, and rulemaking (under 10 CFR part 600) establishing application and review procedures for, and administration, audit, and closeout of, grants and cooperative agreements.''

any proposed significant energy action, the agency must give a detailed statement of any adverse effects on energy supply, distribution, or use if the proposal is implemented, and of reasonable alternatives to the action and their expected benefits on energy supply, distribution, and use. Today's proposed rulemaking is not a significant regulatory action under E.O. 12866. Moreover, it would not have a significant adverse effect on the supply, distribution, or use of energy and has not been designated a significant energy action by the Administrator of OIRA. Therefore, DOE determined that this rule is not a significant energy action. Accordingly, DOE has not prepared a Statement of Energy Effects for this rulemaking.

L. Review Under Section 32 of the Federal Energy Administration Act of 1974

Under section 301 of the Department of Energy Organization Act (Pub. L. 95–91; 42 U.S.C. 7101, *et seq.*), DOE must comply with section 32 of the Federal Energy Administration Act of 1974 (Pub. L. 93–275), as amended by the Federal Energy Administration Authorization Act of 1977 (Pub. L. 95–70). (15 U.S.C. 788) Section 32 provides that, where a proposed rule authorizes or requires use of commercial standards, the NOPR must inform the public of the use and background of such standards. In addition, section 32(c) requires DOE to consult with the Attorney General and the Federal Trade Commission (FTC) about the impact of the commercial or industry standards on competition.

DOE evaluated these revised standards and is unable to conclude whether they fully comply with the requirements of section 32(b) of the Federal Energy Administration Act, (*i.e.,* that they were developed in a manner that fully provides for public participation, comment, and review). Before prescribing a final rule, DOE will consult with the Attorney General and the Chairman of the FTC about the impact of these test procedures on competition.

VI. Approval of the Office of the Secretary

The Secretary of Energy has approved publication of this proposed rule.

List of Subjects in 10 CFR Part 431

Administrative practice and procedure, Confidential business information, Energy conservation, Reporting and recordkeeping requirements.

Issued in Washington, DC, on June 29, 2009.

Steven G. Chalk,

Principal Deputy Assistant Secretary, Energy Efficiency and Renewable Energy.

For the reasons stated in the preamble, DOE proposes to amend part 431 of chapter II of title 10, of the Code of Federal Regulations, to read as set forth below.

PART 431—ENERGY EFFICIENCY PROGRAM FOR CERTAIN COMMERCIAL AND INDUSTRIAL EQUIPMENT

1. The authority citation for part 431 continues to read as follows:

Authority: 42 U.S.C. 6291–6317.

2. Section 431.322 is amended by adding, in alphabetical order, definitions for ''AC control signal,'' ''Active mode,'' ''Basic model,'' ''DC control signal,'' ''Off mode,'' ''PLC control signal,'' ''Standby mode,'' and ''Wireless control signal'' to read as follows:

§ 431.322 Definitions concerning metal halide lamp ballasts and fixtures.

AC control signal means an alternating current (AC) signal that is supplied to the ballast using additional wiring for the purpose of controlling the ballast and putting the ballast in standby mode.

Active mode means the condition in which an energy-using product:

(1) Is connected to a main power source;

(2) Has been activated; and

(3) Provides one or more main functions.

* * * * *

Basic model means, with respect to metal halide ballasts, all units of a given type of metal halide ballast (or class thereof) that:

(1) Are rated to operate a given lamp type and wattage;

(2) Have essentially identical electrical characteristics; and

(3) Have no differing electrical, physical, or functional characteristics that affect energy consumption.

DC control signal means a direct current (DC) signal that is supplied to the ballast using additional wiring for the purpose of controlling the ballast and putting the ballast in standby mode.

* * * * *

Off mode means the condition in which an energy-using product:

(1) Is connected to a main power source; and

(2) Is not providing any standby or active mode function.

PLC control signal means a power line carrier (PLC) signal that is supplied to the ballast using the input ballast wiring for the purpose of controlling the ballast and putting the ballast in standby mode.

* * * * *

Standby mode means the condition in which an energy-using product:

(1) Is connected to a main power source; and

(2) Offers one or more of the following user-oriented or protective functions:

(i) To facilitate the activation or deactivation of other functions (including active mode) by remote switch (including remote control), internal sensor, or timer;

(ii) Continuous functions, including information or status displays (including clocks) or sensor-based functions.

Wireless control signal means a wireless signal that is radiated to and received by the ballast for the purpose of controlling the ballast and putting the ballast in standby mode.

3. Section 431.324 is amended by revising the section heading and by revising paragraph (b) and adding paragraph (c) to read as follows:

§ 431.324 Uniform test method for the measurement of energy efficiency and standby mode energy consumption of metal halide ballasts.

* * * * *

(b) *Active Mode Energy Efficiency Testing and Calculations.* (1) *Test Conditions.* The power supply, ballast test conditions, lamp position, lamp stabilization and test instrumentation shall all conform to the requirements specified in section 4.0, ''General Conditions for Electrical Performance Tests,'' of the ANSI Standard C82.6–2005, ''Ballasts for High Intensity Discharge Lamps—Method of Measurement.'' Ambient temperatures for the testing period shall be maintained at 25°C ± 5°C in a draft-free environment. Basic lamp stabilization shall conform to the general requirements in section 4.4.2, and stabilization shall be reached when the lamp's electrical characteristics vary by no more than 3 percent in three consecutive 10- to 15-minute intervals measured after the minimum burning time of 30 minutes. In cases where switching without extinguishing the lamp is impossible, the alternative stabilization method described in section 4.4.3 shall be used.

(2) *Test Measurement.* The ballast input power and lamp output power during operating conditions shall be measured in accordance with the methods specified in section 6.0, ''Ballast Measurements (Multiple-Supply Type Ballasts)'' of the ANSI Standard C82.6–2005, ''Ballasts for High

Intensity Discharge Lamps—Method of Measurement.''

(3) *Efficiency Calculation.* The measured lamp output power shall be divided by the ballast input power to determine the percent efficiency of the ballast under test.

(c) *Standby Mode Energy Consumption Testing and Calculations.* The measurement of standby mode need not be performed to determine compliance with energy conservation standards for metal halide lamp fixtures established prior to [DATE OF PUBLICATION OF FINAL RULE IN THE **FEDERAL REGISTER**].

(1) *Test Conditions.* The power supply, ballast test conditions, and test instrumentation shall all conform to the requirements specified in section 4.0, ''General Conditions for Electrical Performance Tests,'' of the ANSI Standard C82.6–2005, ''Ballasts for High Intensity Discharge Lamps—Method of Measurement.'' Ambient temperatures for the testing period shall be maintained at 25 °C ± 5 °C in a draft-free environment. Send a signal to the ballast instructing it to have zero light output using the appropriate ballast communication protocol or system for the ballast being tested.

(2) *Measurement of Main Input Power.* Measure the input power (watts) to the ballast in accordance with the methods specified in section 6.0, ''Ballast Measurements (Multiple-Supply Type Ballasts)'' of the ANSI Standard C82.6–2005, ''Ballasts for High Intensity Discharge Lamps—Method of Measurement.''

(3) *Measurement of Control Signal Power.* Measure the power from the control signal path using one of the methods (as appropriate to the given unit) described below:

(i) *DC Control Signal.* Measure the DC control signal voltage, using a voltmeter (V), and current, using an ammeter (A) connected to the ballast in accordance with the circuit shown in Figure 1. The DC control signal power is calculated by multiplying the DC control signal voltage by the DC control signal current.

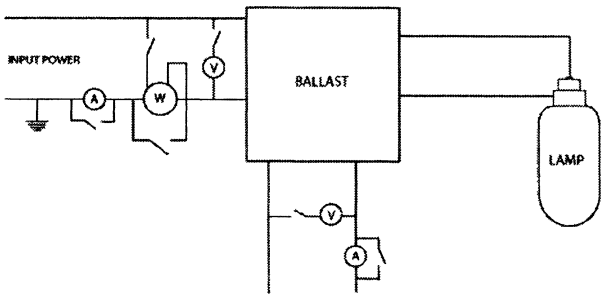

Figure 1: Circuit for Measuring DC Control Signal Power in Standby Mode

(ii) *AC Control Signal.* Measure the AC control signal power (watts), using a wattmeter (W), connected to the ballast in accordance with the circuit shown in Figure 2.

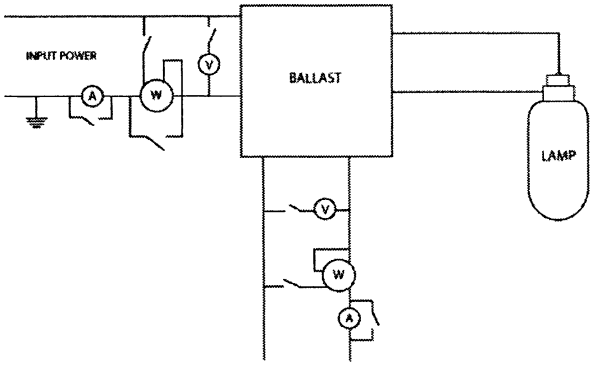

Figure 2: Circuit for Measuring AC Control Signal Power in Standby Mode

(iii) *Power Line Carrier (PLC) Control Signal.* Measure the PLC control signal power (watts), using a wattmeter (W) connected to the ballast in accordance with the circuit shown in Figure 3. The wattmeter must have a frequency response that is at least 10 times higher than the PLC being measured to measure the PLC signal correctly. The wattmeter must also be high-pass filtered to filter out power at 60 Hertz.

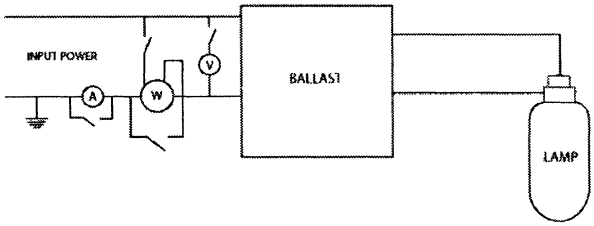

Figure 3: Circuit for Measuring PLC Control Signal Power in Standby Mode

4. Section 431.325 is added to subpart S to read as follows:

§ 431.325 Units to be tested.

For each basic model of metal halide ballast selected for testing, a sample of sufficient size, no less than four, shall be selected at random and tested to ensure that:

(a) Any represented value of estimated energy efficiency calculated as the measured output power to the lamp divided by the measured input power to the ballast (P_{out}/P_{in}), of a basic model is no less than the higher of:

(1) The mean of the sample; or

(2) The upper 99 percent confidence limit of the true mean divided by 1.01.

(b) Any represented value of the energy efficiency of a basic model is no greater than the lower of:

(1) The mean of the sample; or

(2) The lower 99 percent confidence limit of the true mean divided by 0.99.

4. A new Subpart T is added to Part 431 to read as follows:

Subpart T—Certification and Enforcement

Sec.
431.370 Purpose and scope.
431.371 Submission of data.
431.372 Sampling.
431.373 Enforcement.
Appendix A to Subpart T of Part 431—Compliance Statement for Certain Commercial Equipment
Appendix B to Subpart T of Part 431—Certification Report for Certain Commercial Equipment
Appendix C to Subpart T of Part 431—Enforcement for Performance Standards; Compliance Determination Procedure for Certain Commercial Equipment

Subpart T—Certification and Enforcement

§ 431.370 Purpose and scope.

This subpart sets forth the procedures to be followed for manufacturer compliance certifications of metal halide lamp fixtures and for DOE enforcement actions to determine whether a basic model of metal halide ballasts complies with the applicable energy conservation standard set forth in this part. Energy conservation standards include minimum levels of efficiency. This subpart does not apply to electric motors.

§ 431.371 Submission of data.

(a) *Certification.* (1) Except as provided in paragraph (a)(2) of this section, each manufacturer or private labeler, before distributing in commerce any basic model of covered equipment, covered by this subpart and subject to an energy conservation standard set forth in this part, shall certify by means of a compliance statement and a certification report that each basic model meets the applicable energy conservation standard. The compliance statement, signed by the company official submitting the statement, and the certification report(s) shall be sent by certified mail to: U.S. Department of Energy, Building Technologies Program, Mailstop EE–2J, 1000 Independence Avenue, SW., Washington, DC 20585–0121, or e-mailed to the Department at: *certification.report@ee.doe.gov*.

(2) Each manufacturer or private labeler of a basic model of metal halide ballast shall file a compliance statement and its first certification report with DOE on or before [DATE ONE YEAR AFTER DATE OF PUBLICATION OF THE FINAL RULE IN THE **FEDERAL REGISTER**].

(3) *Amendment of information.* If information in a compliance statement or certification report previously submitted to the Department under this section is found to be incorrect, each manufacturer or private labeler (or an authorized representative) must submit the corrected information to the Department at the address and in the manner described in this section.

(4) *Third-party representatives.* Notices designating a change of third-party representative must be sent to the Department at the address and in the manner described in this section.

(5) *Compliance statement.* Each manufacturer or private labeler need only submit its compliance statement once for each basic model. Such statement shall include all required information specified in the format set forth in Appendix A of this subpart and shall certify, with respect to each basic model currently produced by the manufacturer and new basic models it introduces in the future, that:

(i) Each basic model complies and will comply with the applicable energy conservation standard;

(ii) All representations as to efficiency in the manufacturer's certification report(s) are and will be based on testing;

(iii) All information reported in the certification report(s) is and will be true, accurate, and complete; and

(iv) The manufacturer or private labeler is aware of the penalties associated with violations of the Act, the regulations thereunder, and 18 U.S.C. 1001, which prohibits knowingly making false statements to the Federal Government.

(6) *Certification report.* Each manufacturer must submit to DOE a certification report for all its metal halide ballast basic models. The certification report (for which a suggested format is set forth in Appendix B of this subpart) shall include for each basic model the product type, product class, manufacturer's name, private labeler's name(s) (if applicable), the manufacturer's model number(s), and the ballast efficiency in percent.

(7) Copies of reports to the Federal Trade Commission that include the information specified in paragraph (a)(6) of this section could serve in lieu of the certification report.

(b) *Model modifications.* Any change to a basic model that affects energy consumption constitutes the addition of a new basic model. If such a change reduces energy consumption, the new model shall be considered in compliance with the standard without any additional testing. If, however, such a change increases energy consumption while meeting the standard, then the manufacturer must submit all information required by paragraph (a)(6) of this section for the new basic model. Any such submission shall be sent by certified mail to: U.S. Department of Energy, Building Technologies Program,

Mailstop EE–2J, 1000 Independence Avenue, SW., Washington, DC 20585–0121, or e-mailed to the Department at: *certification.report@ee.doe.gov*.

(c) *Discontinued models.* For a basic model whose production has ceased and is no longer being distributed, the manufacturer shall report this, by certified mail, to: U.S. Department of Energy, Building Technologies Program, Mailstop EE–2J, 1000 Independence Avenue, SW., Washington, DC 20585–0121. For each basic model, the report shall include: equipment type, equipment class, the manufacturer's name, the private labeler's name(s), if applicable, and the manufacturer's model number. If the reporting of discontinued models coincides with the submittal of a certification report, such information can be included in the certification report.

(d) *Third-party representation.* A manufacturer or private labeler may elect to use a third party (such as a trade association or other authorized representative) to submit the certification report to DOE. Such certification reports shall include all the information specified in paragraph (a)(6) of this section. Third parties submitting certification reports shall include the names of the manufacturers or private labelers who authorized the submittal of the certification reports to DOE on their behalf. The third-party representative also may submit model modification information, as specified in paragraph (b) of this section, and discontinued model information, as specified in paragraph (c) of this section, on behalf of an authorizing manufacturer or private labeler.

§ 431.372 Sampling.

For purposes of a certification of compliance, the determination that a basic model complies with the applicable energy conservation standard shall be based upon the testing and sampling procedures, and other applicable rating procedures, set forth in this part. For purposes of a certification of compliance, the determination that a basic model complies with the applicable design standard shall be based on the incorporation of specific design requirements specified in this part.

§ 431.373 Enforcement.

Process for Metal Halide Lamp Ballasts. This section sets forth procedures DOE will follow in pursuing alleged noncompliance with an applicable energy conservation standard.

(a) *Performance standards.* (1) *Test notice.* Upon receiving information in writing concerning the energy performance of a particular covered equipment sold by a particular manufacturer or private labeler, which indicates that the covered equipment may not be in compliance with the applicable energy standard, the Secretary may conduct a review of the test records. The Secretary may then conduct enforcement testing of that equipment under the DOE test procedure, a process that is initiated by means of a test notice addressed to the manufacturer or private labeler in accordance with the requirements outlined below.

(i) The test notice procedure will only be followed after the Secretary or his/her designated representative has examined the underlying test data provided by the manufacturer, and after the manufacturer has been offered the opportunity to meet with the Department to verify compliance with the applicable energy conservation standard and/or water conservation standard. A representative designated by the Secretary must be permitted to observe any reverification procedures undertaken according to this subpart, and to inspect the results of such reverification.

(ii) The test notice will be signed by the Secretary or his/her designee and will be mailed or delivered by the Department to the plant manager or other responsible official designated by the manufacturer.

(iii) The test notice will specify the basic model to be selected for testing, the number of units to be tested, the method for selecting these units, the date and time at which testing is to begin, the date when testing is scheduled to be completed, and the facility at which testing will be conducted. The test notice may also provide for situations in which the selected basic model is unavailable for testing, and it may include alternative basic models.

(iv) The Secretary may require in the test notice that the manufacturer of covered equipment shall ship at his expense a reasonable number of units of each basic model specified in the test notice to a testing laboratory designated by the Secretary. The number of units of a basic model specified in a test notice shall not exceed 20.

(v) Within five working days of the time the units are selected, the manufacturer must ship the specified test units of a basic model to the designated testing laboratory.

(2) *Testing Laboratory.* Whenever the Department conducts enforcement testing at a designated laboratory in accordance with a test notice under this section, the resulting test data shall constitute official test data for that basic model. The Department will use such test data to make a determination of compliance or noncompliance.

(3) *Sampling.* The Secretary will base the determination of whether a manufacturer's basic model complies with the applicable energy conservation standard on testing conducted in accordance with the applicable test procedures specified in this part, and with the following statistical sampling procedures for metal halide lamp ballasts, with the methods described in 10 CFR Part 431, Subpart T, Appendix B (Sampling Plan for Enforcement Testing).

(4) *Test unit selection.* (i) For metal halide lamp ballasts, the following applies:

(A) The Department shall select a batch, a batch sample, and test units from the batch sample in accordance with the following provisions of this paragraph and the conditions specified in the test notice.

(B) The batch may be subdivided by the Department using criteria specified in the test notice.

(C) The Department will then randomly select a batch sample of up to 20 units from one or more subdivided groups within the batch. The manufacturer shall keep on hand all units in the batch sample until the basic model is determined to be in compliance or non-compliance.

(D) The Department will randomly select individual test units comprising the test sample from the batch sample.

(E) All random selections shall be achieved by sequentially numbering all the units in a batch sample and then using a table of random numbers to select the units to be tested.

(ii) [Reserved]

(5) *Test unit preparation.* (i) Before and during the testing, a test unit selected in accordance with paragraph (a)(4) of this section shall not be prepared, modified, or adjusted in any manner unless such preparation, modification, or adjustment is allowed by the applicable DOE test procedure. DOE will test each unit in accordance with the applicable test procedures.

(ii) No one may perform any quality control, testing, or assembly procedures on a test unit, or any parts and subassemblies thereof, that is not performed during the production and assembly of all other units included in the basic model.

(iii) A test unit shall be considered defective if it is inoperative. A test unit is also defective if it is found to be in noncompliance due to a manufacturing defect or due to failure of the unit to

operate according to the manufacturer's design and operating instructions, and the manufacturer demonstrates by statistically valid means that, with respect to such defect or failure, the unit is not representative of the population of production units from which it is obtained. Defective units, including those damaged due to shipping or handling, must be reported immediately to DOE. The Department will authorize testing of an additional unit on a case-by-case basis.

(6) *Testing at manufacturer's option.* (i) If the Department determines a basic model to be in noncompliance with the applicable energy performance standard at the conclusion of its initial enforcement sampling plan testing, the manufacturer may request that the Department conduct additional testing of the basic model. Additional testing under this paragraph must be in accordance with the applicable test procedure, and for metal halide lamp ballasts, the applicable provisions in Appendix B to Subpart T of Part 431.

(ii) All units tested under this paragraph shall be selected and tested in accordance with paragraphs (a)(1)(v), (a)(2), (a)(4), and (a)(5) of this section.

(iii) The manufacturer shall bear the cost of all testing under this paragraph.

(iv) The Department will advise the manufacturer of the method for selecting the additional units for testing, the date and time at which testing is to begin, the date by which testing is scheduled to be completed, and the facility at which the testing will occur.

(v) The manufacturer shall cease distribution of the basic model tested under the provisions of this paragraph from the time the manufacturer elects to exercise the option provided in this paragraph until the basic model is determined to be in compliance. The Department may seek civil penalties for all units distributed during such period.

(vi) If the additional testing results in a determination of compliance, the Department will issue a notice of allowance to resume distribution.

(b) *Cessation of distribution of a basic model of commercial equipment other than electric motors.* (1) In the event the Department determines, in accordance with enforcement provisions set forth in this subpart, that a model of covered equipment is noncompliant, or if a manufacturer or private labeler determines one of its models to be in noncompliance, the manufacturer or private labeler shall:

(i) Immediately cease distribution in commerce of all units of the basic model in question;

(ii) Give immediate written notification of the determination of noncompliance to all persons to whom the manufacturer has distributed units of the basic model manufactured since the date of the last determination of compliance; and

(iii) If requested by the Secretary, provide DOE, within 30 days of the request, records, reports and other documentation pertaining to the acquisition, ordering, storage, shipment, or sale of a basic model determined to be in noncompliance.

(2) The manufacturer may modify the noncompliant basic model in such manner as to make it comply with the applicable performance standard. The manufacturer or private labeler must treat such a modified basic model as a new basic model and certify it in accordance with the provisions of this subpart. In addition to satisfying all requirements of this subpart, the manufacturer must also maintain records that demonstrate that modifications have been made to all units of the new basic model before its distribution in commerce.

(3) If a manufacturer or private labeler has a basic model that is not properly certified in accordance with the requirements of this subpart, the Secretary may seek, among other remedies, injunctive action to prohibit distribution in commerce of the basic model.

Appendix A to Subpart T of Part 431—Compliance Statement for Certain Commercial Equipment

Product: _____

Manufacturer's or Private Labeler's Name and Address:

_____

_____

[Company name] (''the company'') submits this Compliance Statement under 10 CFR Part 431 (Energy Efficiency Program for Certain Commercial and Industrial Equipment) and Part A–1 of the Energy Policy and Conservation Act (Pub. L. 94–163), and amendments thereto. I am signing this on behalf of and as a responsible official of the company. All basic models of commercial or industrial equipment subject to energy conservation standards specified in 10 CFR Part 431 that this company manufacturers comply with the applicable energy conservation standard(s). We have complied with the applicable testing requirements (prescribed in 10 CFR Part 431) in making this determination, and in determining the energy efficiency set forth in any accompanying Certification Report. All information in such Certification Report(s) and in this Compliance Statement is true, accurate, and complete. The company pledges that all this information in any future Compliance Statement(s) and Certification Report(s) will meet these standards, and that the company will comply with the energy conservation requirements in 10 CFR Part 431 with regard to any new basic model it distributes in the future. The company is aware of the penalties associated with violations of the Act and the regulations thereunder, and is also aware of the provisions contained in 18 U.S.C. 1001, which prohibits knowingly making false statements to the Federal Government.

Name of Company Official: _____

Signature of Company Official: _____

Title: _____

Firm or Organization: _____

Date: _____

Name of Person to Contact for Further Information:

_____

Address: _____

_____

Telephone Number: _____

Facsimile Number: _____

Third-Party Representation (if applicable)

For a certification reports prepared and submitted by a third-party organization under the provisions of 10 CFR Part 431, the company official who authorized said third-party representation is:

Name: _____

Title: _____

Address: _____

_____

Telephone Number: _____

Facsimile Number: _____

The third-party organization authorized to act as representative:

_____

Third-Party Organization: _____

Address: _____

_____

Telephone Number: _____

Facsimile Number: _____

Submit by Certified Mail to: U.S. Department of Energy, Building Technologies Program, Mailstop EE–2J, 1000 Independence Avenue, SW., Washington, DC 20585–0121.

Appendix B to Subpart T to Part 431—Certification Report for Certain Commercial Equipment

All information reported in this Certification Report(s) is true, accurate, and complete. The company is aware of the penalties associated with violations of the Act, the regulations thereunder, and is also aware of the provisions contained in 18 U.S.C. 1001, which prohibits knowingly making false statements to the Federal Government.

Name of Company Official or Third-Party Representative:

_____

Signature of Company Official or Third-Party Representative:

_____

Title: _____

Date: _____

Equipment Type: _____

Manufacturer: _____

Private Labeler (if applicable): _____

Name of Person to Contact for Further Information:

_____

Address: _____

_____

Telephone Number: _____
Facsimile Number: _____

For Existing, New, or Modified Models: [1]

For Discontinued Models: [2]

Submit by Certified Mail to: U.S. Department of Energy, Building Technologies Program, Mailstop EE–2J, 1000 Independence Avenue, SW., Washington, DC 20585–0121.

Appendix C to Subpart T of Part 431—Enforcement for Performance Standards; Compliance Determination Procedure for Certain Commercial Equipment

The Department will determine compliance as follows:

(a) After it has determined the sample size, the Department will measure the energy performance for each unit in accordance with the following table:

Sample size	Number of tests for each unit
4	1
3	1
2	2
1	4

(b) Compute the mean of the measured energy performance ($_{x1}$) for all tests as follows:

$$x_1 = \frac{1}{n_1}\left\{\sum_{i=1}^{n_1} x_i\right\} \qquad [1]$$

Where x_i is the measured energy efficiency or consumption from test i, and n_1 is the total number of tests.

(c) Compute the standard deviation (S_1) of the measured energy performance from the n_1 tests as follows:

$$S_1 = \sqrt{\frac{\sum_{i=1}^{n_1}(x_i - x_1)^2}{n_1 - 1}} \qquad [2]$$

(d) Compute the standard error (Sx_1) of the measured energy performance from the n_1 tests as follows:

$$S_{x_1} = \frac{S_1}{\sqrt{n_1}} \qquad [3]$$

(e)(1) For an energy efficiency standard, compute the lower control limit (LCL_1) according to:

$$LCL_1 = EPS - ts_{x_1} \qquad [4a]$$

or

$$LCL_1 = 97.5\ EPS \qquad [4b]$$

(whichever is greater)

(2) For an energy use standard, compute the upper control limit (UCL_1) according to:

$$UCL_1 = EPS + ts_{x_1} \qquad [5a]$$

or

$$UCL_1 = 1.025\ EPS \qquad [5b]$$

(whichever is less)

Where EPS is the energy performance standard, and t is a statistic based on a 99 percent, one-sided confidence limit and a sample size of n_1.

(f)(1) Compare the sample mean to the control limit. The basic model is in compliance and testing is at an end if, for an energy efficiency standard, the sample mean is equal to or greater than the lower control limit or, for an energy consumption standard, the sample mean is equal to or less than the upper control limit. If, for an energy efficiency standard, the sample mean is less than the lower control limit or, for an energy consumption standard, the sample mean is greater than the upper control limit, compliance has not been demonstrated. Unless the manufacturer requests manufacturer-option testing and provides the additional units for such testing, the basic model is in noncompliance and the testing is at an end.

(2) If the manufacturer does request additional testing, and provides the necessary additional units, DOE will test each unit the same number of times it tested previous units. DOE will then compute a combined sample mean, standard deviation, and standard error as described above. (The ''combined sample'' refers to the units DOE initially tested plus the additional units DOE has tested at the manufacturer's request.) DOE will determine compliance or noncompliance from the mean and the new lower or upper control limit of the combined sample. If, for an energy efficiency standard, the combined sample mean is equal to or greater than the new lower control limit or, for an energy consumption standard, the sample mean is equal to or less than the upper control limit, the basic model is in compliance, and testing is at an end. If the combined sample mean does not satisfy one of these two conditions, the basic model is in noncompliance.

[FR Doc. E9–15881 Filed 7–9–09; 8:45 am]

BILLING CODE 6450–01–P

[1] Provide specific equipment information including, for each basic model, the product class, the manufacturer's model number(s), and the other information required in 431.371(a)(6)(i).

[2] Provide manufacturer's model number(s).

DEPARTMENT OF LABOR

Occupational Safety and Health Administration

29 CFR Part 1956

[Docket No. OSHA–2009–0010]

RIN 1218–AC44

Illinois State Plan for Public Employees Only; Notice of Submission; Proposal To Grant Initial State Plan Approval; Request for Public Comment and Opportunity To Request Public Hearing

AGENCY: Occupational Safety and Health Administration, Department of Labor (OSHA).

ACTION: Proposed rule; request for written comments; notice of opportunity to request informal public hearing.

SUMMARY: This document gives notice of the submission by the Illinois Department of Labor of a developmental State Plan for occupational safety and health, applicable only to public sector employment (employees of the State and its political subdivisions), for determination of initial approval under section 18 of the Occupational Safety and Health Act of 1970 (the ''Act''). OSHA is seeking written public comment on whether or not initial State Plan approval should be granted and offers an opportunity to interested persons to request an informal public hearing on the question of initial State Plan approval.

Approval of the Illinois Public Employee Only State Plan will be contingent upon a determination that the Plan meets, or will meet within three years, OSHA's Plan approval criteria and the availability of funding as contained in the Department of Labor's Fiscal Year 2009 budget.

DATES: Written comments and requests for a hearing must be submitted (postmarked, sent or received) by August 10, 2009.

ADDRESSES: You may submit comments and requests for a hearing, identified by Docket No. OSHA–2009–0010, by any of the following methods:

Electronically: Comments and attachments and requests for a hearing may be submitted electronically at *http://www.regulations.gov,* which is the Federal eRulemaking Portal. Follow the instructions for submitting comments.

Facsimile: If your comments, including attachments, and requests for a hearing do not exceed 10 pages, you may fax them to the OSHA Docket

Office at 202–693–1648. Hard copies of these documents are not required.

Regular mail, hand delivery, express mail, messenger or courier service: Submit three copies of your comments and attachments, as well as hearing requests, to the OSHA Docket Office, Docket No. OSHA–2009–0010, Technical Data Center, Room N–2625, OSHA, U.S. Department of Labor, 200 Constitution Avenue, NW., Washington, DC 20210; Telephone 202–693–2350 (TTY number 877–889–5627). Note that security-related problems may result in significant delays in receiving submissions by regular mail. Please contact the OSHA Docket Office for information about security procedures concerning delivery of materials by express delivery, hand delivery, or courier service. The OSHA Docket Office and Department of Labor hours of operation are 8:15 a.m. to 4:45 p.m., ET.

Instructions: All submissions must include the Agency name and the OSHA docket number (OSHA–2009–0010). All submissions, including any personal information, are placed in the public docket without revision, and will be available online at *http://www.regulations.gov.* Therefore, OSHA cautions members of the public against submitting information and statements that should remain private, including comments that contain personal information, such as Social Security numbers, birth dates, and medical data.

Docket: To read or download comments or other material in the docket, go to *http://www.regulations.gov* or to the OSHA Docket Office at the address above. Documents in the docket are listed in the *http://www.regulations.gov* index. However, some information (*e.g.,* copyrighted material) is not publicly available to read or download through this Web site. All submissions, including copyrighted material, are available for inspection and copying at the OSHA Docket Office. Contact the OSHA Docket Office for assistance in locating docket submissions, including notices of intention to appear, the text of testimony, and documentary evidence.

Copies of this **Federal Register** *notice:* Electronic copies of this notice as well as copies of the proposed Illinois State Plan for Public Employees Only are available at *http://www.regulations.gov.* Electronic copies of this notice, as well as news releases and other relevant information, are available on OSHA's Web page at *http://www.osha.gov.*

Copies of the proposed Illinois State Plan for Public Employees Only are also available for review and copying at: OSHA's Regional Office in Chicago, Illinois, at 230 South Dearborn Street, 32nd Floor, Room 3244, Chicago, Illinois 60604, and at: The Offices of the Illinois Department of Labor, Safety Inspection and Education Division at 1 West Old State Capitol Plaza, 3rd floor, Springfield, Illinois 62701; 160 North LaSalle Street, Suite C–1300, Chicago, Illinois 60601; or 2309 West Main Street, Suite 115, Marion, Illinois 62959.

FOR FURTHER INFORMATION CONTACT:

Press inquiries: Contact Jennifer Ashley, Office of Communications, Room N–3647, OSHA, U.S. Department of Labor, 200 Constitution Avenue, NW., Washington, DC 20210; Telephone (202) 693–1999.

General and technical inquiries: Contact Barbara Bryant, Director, Office of State Programs, Directorate of Cooperative and State Programs, OSHA, U.S. Department of Labor, Room N–3700, 200 Constitution Avenue, NW., Washington, DC 20210, Telephone (202) 693–2244 or Fax (202) 693–1671.

SUPPLEMENTARY INFORMATION:

A. Background

Section 18 of the Occupational Safety and Health Act of 1970 (the ''Act''), 29 U.S.C. 667, provides that a State which desires to assume responsibility for the development and enforcement of standards relating to any occupational safety and health issue with respect to which a Federal standard has been promulgated may submit a State Plan to the Assistant Secretary of Labor for Occupational Safety and Health (''Assistant Secretary'') documenting the proposed program in detail. Regulations promulgated pursuant to the Act at 29 CFR part 1956 provide that a State may submit a State Plan for the development and enforcement of occupational safety and health standards applicable only to employees of the State and its political subdivisions (''public employees''). Under these regulations the Assistant Secretary will approve a State Plan for public employees if the Plan provides for the development and enforcement of standards relating to hazards in employment covered by the Plan which are or will be at least as effective in providing safe and healthful employment and places of employment for public employees as standards promulgated and enforced under section 6 of the Federal Act, giving due consideration to differences between public and private sector employment. In making this determination the Assistant Secretary will consider, among other things, the criteria and indices of effectiveness set forth in 29 CFR part 1956, subpart B. State and local government workers are excluded from Federal OSHA coverage under the Occupational Safety and Health Act of 1970.

B. Illinois State Plan History

In 1973 the Illinois Industrial Commission and the Illinois Department of Labor obtained OSHA approval of a State Plan for the enforcement of occupational safety and health standards covering private sector workplaces as well as a program for public employees in Illinois. That Plan was approved by the Assistant Secretary on November 5, 1973 (38 FR 30436; 29 CFR 1952.280 *et seq.*). The Plan was subsequently withdrawn effective June 30, 1975 by the State of Illinois under the authority of then Governor Dan Walker after the State was unable to make the necessary modifications to its program and statutory authority, and its State funding was withdrawn (40 FR 24523).

Since 1985, the Illinois Department of Labor (IDOL), Safety Inspection and Education Division (SIED), has adopted standards and performed inspections in the public sector (State, county, and municipal employees) as outlined under the provisions of the State's existing enabling legislation: The Illinois Safety Inspection and Education Act (SIEA) [820 ILCS 220] and the Illinois Health and Safety Act (HSA) [820 ILCS 225]. In 2005, Illinois began working on a Public Employee Only State Plan and submitted a draft Plan to OSHA in May of 2006. OSHA's review findings were detailed in various memoranda and other documents, including a May 18, 2007 letter to the Illinois Department of Labor Director Catherine Shannon. OSHA determined that the Illinois statutes, as structured, and the proposed State Plan presented several obstacles to meeting the Federal Public Employee Only State Plan approval criteria in 29 CFR 1956. Amendments to both the Illinois Safety Inspection and Education Act and the Illinois Health and Safety Act were proposed and enacted by the Illinois General Assembly and signed into law by the Governor in 2006 and 2007. The amended legislation provides the basis for establishing a comprehensive occupational safety and health program applicable to the public employees in the State.

Illinois formally submitted a revised Plan applicable only to public employees for Federal approval on June 18, 2008. Over the next several months, OSHA worked with Illinois in identifying areas of the proposed Plan which needed to be addressed or required clarification. In response to Federal review of the proposed State Plan, supplemental assurances, and revisions, corrections and additions to

the Plan were submitted on April 8, 2009 and May 15, 2009. Further modifications were submitted by the State on June 8, 2009. The revised IDOL/SIED Plan has been found to be conceptually approvable as a developmental State Plan.

The Act provides for funding of up to 50% of the State Plan costs, but longstanding language in OSHA's appropriation legislation further provides that OSHA must fund ''* * * no less than 50% of the costs required to be incurred'' by an approved State Plan. Such Federal funds to support the State Plan must be available prior to State Plan approval. The Omnibus Appropriations Act for Fiscal Year 2009 includes $1.5 million in additional OSHA State Plan grant funds to allow for Department of Labor approval of an Illinois State Plan.

After an opportunity for public comment and a hearing, should one be requested, the Assistant Secretary of Labor will approve the Illinois Public Employee Only State Plan if it is determined that the Plan meets the criteria set forth in the Occupational Safety and Health Act of 1970 and applicable regulations at 29 CFR Part 1956, Subpart B. The approval of a State Plan for public employees in Illinois is not a significant regulatory action as defined in Executive Order 12866.

C. Description of the Illinois State Plan

The Plan designates the Illinois Department of Labor as the State agency responsible for administering the Plan throughout the State. Under the Plan's legislation, the Illinois Safety Inspection and Education Act [820 ILCS 220] and the Illinois Health and Safety Act [820 ILCS 225], the Illinois Department of Labor has full authority to adopt standards and regulations and enforce and administer all laws and rules protecting the safety and health of employees of the State and its political subdivisions. Illinois has adopted State standards identical to Federal occupational safety and health standards as promulgated through September 30, 2005. The State Plan includes a commitment to update all standards within one year after Plan approval. The Plan also provides that future OSHA standards and revisions will be adopted by the State within six months of Federal promulgation (30 days for any emergency temporary standard) in accordance with the requirements at 29 CFR 1953.5.

Section 4.2 of the Illinois Health and Safety Act [820 ILCS 225] includes provisions for the granting of permanent and temporary variances from State standards to public employers in terms substantially similar to the variance provisions contained in the Federal Act. The State provisions require employee notification of variance applications as well as employee rights to participate in hearings held on variance applications. Variances may not be granted unless it is established that adequate protection is afforded employees under the terms of the variance.

Sections 2 and 2.1 of the Illinois Safety Inspection and Education Act (SIEA) [820 ILCS 220] provide for inspections of covered workplaces, including inspections in response to employee complaints. If a determination is made that an employee complaint does not warrant an inspection, the complainant will be notified in writing of such determination. Additionally, Section 2 of the SIEA provides the opportunity for employer and employee representatives to accompany an inspector during an inspection for the purpose of aiding in the inspection.

The Plan provides for notification to employees of their protections and obligations under the Plan by such means as a State poster, required posting of notices of violation, etc. Section 2.2 of the Illinois Safety Inspection and Education Act provides for protection of employees against discharge or discrimination resulting from exercise of their rights under the State Acts in terms essentially identical to section 11(c) of the Federal Act. The Plan also includes provisions for right of entry for inspection, prohibition of advance notice of inspection, and employers' obligations to maintain records and provide reports as required.

Although Section 2.3 of the SIEA contains authority for a system of first-instance monetary penalties, in practice it is the State's intent to issue monetary penalties only for failure to correct and egregious violations. The State has discretionary authority for civil penalties of not more than $10,000 for repeat and willful violations. Serious and other-than-serious violations may be assessed a penalty of up to $1,000 per violation and failure-to-correct violations may be assessed a penalty of up to $1,000 per violation per day. In addition, any public employer who willfully violates any standard, rule, or order can be charged by the Attorney General with a Class 4 felony if that violation causes death to any employee. The Plan provides a scheme of enforcement for compelling compliance under which public employers are issued citations for any violation of standards. These citations must describe the nature of the violation, including reference to the standard, and fix a reasonable time for abatement. The Illinois Plan does not include an independent review authority for review of contested cases. Although the Director has statutory responsibility for both the enforcement and the appeals process, in practice, Administrative Law Judges hear contested cases without any oversight or review by the Director. The State will make appropriate changes to its regulations and procedures to ensure the separation of these functions and the independence of the adjudicatory process. The Director of Labor will remain responsible for the enforcement process, including the issuance of citations and penalties, and their defense, if contested. Public employers or their representatives who receive a citation or a proposed penalty may within 15 working days contest the citation, proposed penalty and/or abatement period and request a hearing before an Administrative Law Judge (ALJ) on behalf of the Director. Any public employee or representative may within 15 working days request a hearing before an ALJ regarding the reasonableness of the abatement period. Informal review prior to contest may also be requested at the division level. The ALJ's decision is subject to appeal to the courts.

The State has a currently authorized staff of eight safety and three health compliance officers who, in addition to inspections, also perform duties equivalent to OSHA's on-site consultation program. The Illinois Department of Commerce and Economic Development delivers OSHA's On-Site Consultation program to private sector employers throughout the State. The Plan provides assurances that within three years no staff will have dual roles, and the State will have a fully trained, adequate staff, of eleven safety and three health compliance officers for enforcement inspections, and three safety and two health consultants to perform consultation services in the public sector. As new staff members are hired they will perform either enforcement or consultation functions. 29 CFR 1956.10(g) requires that State Plans for public employees provide a sufficient number of adequately trained and qualified personnel necessary for the enforcement of standards. The compliance staffing requirements (or benchmarks) for State Plans covering both the private and public sectors are established based on the ''fully effective'' test established in *AFL–CIO* v. *Marshall,* 570 F.2d 1030 (D.C. Cir., 1978). This staffing test, and the complicated formula used to derive benchmarks for complete private/public sector Plans, is not intended, nor is it

appropriate, for application to the staffing needs of public employee only Plans. However, the State has given satisfactory assurance in its Plan that it will meet the staffing requirements of 29 CFR 1956.10. The State has also given satisfactory assurances of adequate State matching funds (50%) to support the Plan and is requesting initial Federal funding of $1,500,000 for a total initial program effort of $3 million.

Although the State Acts set forth the general authority and scope for implementing the Illinois Public Employee Plan, the Plan is developmental under the terms of 29 CFR 1956.2(b), in that specific rules, regulations, and implementing procedures must still be adopted or revised to carry out the Plan and make it structurally ''at least as effective'' as Federal OSHA and fully operational. The Plan sets forth a timetable for the accomplishment of these and other developmental goals within three years of Plan approval. This timetable addresses such general areas as the adoption of standards and the revision of regulations governing enforcement, consultation, variances, contested cases, employee access to information, and recordkeeping. Other developmental aspects include hiring and training of staff, participation in OSHA's management information system, development of a Field Operations Manual and all other implementing policies, procedures and instruction necessary for the operation of an effective program. The State has extensively revised its initial State Plan submission to address a number of issues which were raised during the course of Federal review of the Illinois Plan and that required further clarification from the State.

D. Request for Public Comment and Opportunity To Request Hearing

Public comment on the Illinois Public Employee Only State Plan is hereby requested. Interested persons are invited to submit written data, views, and comments with respect to this proposed initial State Plan approval. These comments must be received on or before August 10, 2009. Written submissions must clearly identify the issues that are addressed and the positions taken with respect to each issue. The State of Illinois will be afforded the opportunity to respond to each submission. The Illinois Department of Labor must also publish appropriate notice within the State of Illinois within 5 days of publication of this notice, announcing OSHA's proposal to approve an Illinois State Plan for Public Employees Only, contingent on the availability of appropriated funds, and giving notice of the opportunity for public comment.

Pursuant to 29 CFR 1902.39(f), interested persons may request an informal hearing concerning the proposed initial State Plan approval. Such requests also must be received on or before August 10, 2009 and may be submitted electronically, by facsimile, or by regular mail, hand delivery, express mail, messenger or courier service, as indicated under **ADDRESSES** above. Such requests must present particularized written objections to the proposed initial State Plan approval. The Assistant Secretary will decide within 30 days of the last day for filing written views or comments and requests for a hearing whether the objections raised are substantial and, if so, will publish notice of the time and place of the scheduled hearing.

The Assistant Secretary will, within a reasonable time after the close of the comment period or after the certification of the record if a hearing is held, publish a decision in the **Federal Register.** All written and oral submissions, as well as other information gathered by OSHA, will be considered in any action taken. The record of this proceeding, including written comments and requests for hearing, and all materials submitted in response to this notice and at any subsequent hearing, are available at *http://www.regulations.gov* or the OSHA Docket Office at the address above.

E. Regulatory Flexibility Act

OSHA certifies pursuant to the Regulatory Flexibility Act of 1980 (5 U.S.C. 601 *et seq.*) that the proposed initial approval of the Illinois State Plan will not have a significant economic impact on a substantial number of small entities. By its own terms, the Plan will have no effect on private sector employment, but is limited to the State and its political subdivisions. Moreover, the Illinois Safety Inspection and Education Act has been in effect since 1961 and the Illinois Health and Safety Act has been in effect since 1936, when the State first established a safety and health program. Since 1985, the Illinois program for public employees has been in operation under the Illinois Department of Labor with State funding and most public sector employers in the State, including small units of local government, have been subject to its terms. Compliance with State OSHA standards is required by State law; Federal approval of a State Plan imposes regulatory requirements only on the agency responsible for administering the State Plan. Accordingly, no new obligations would be placed on public sector employers as a result of Federal approval of the Plan.

F. Federalism

Executive Order 13132, ''Federalism,'' emphasizes consultation between Federal agencies and the States and establishes specific review procedures the Federal government must follow as it carries out policies which affect state or local governments. OSHA has consulted extensively with Illinois throughout the development, submission and consideration of its proposed State Plan. Although OSHA has determined that the requirements and consultation procedures provided in Executive Order 13132 are not applicable to initial approval decisions under the Act, which have no effect outside the particular State receiving the approval, OSHA has reviewed the Illinois initial approval decision proposed today, and believes it is consistent with the principles and criteria set forth in the Executive Order.

G. Authority and Signature

This document was prepared under the direction of Jordan Barab, Acting Assistant Secretary of Labor for Occupational Safety and Health. It is issued under Section 18 of the Occupational Safety and Health Act of 1970 (29 U.S.C. 667), 29 CFR Parts 1956 and 1902, and Secretary of Labor's Order No. 5–2007 (72 FR 31160).

Signed at Washington, DC, this 7th day of July 2009.

Jordan Barab,

Acting Assistant Secretary of Labor for Occupational Safety and Health.

[FR Doc. E9–16379 Filed 7–9–09; 8:45 am]

BILLING CODE 4510–26–P

DEPARTMENT OF VETERANS AFFAIRS

38 CFR Part 59

RIN 2900–AM70

Grants to States for Construction or Acquisition of State Home Facilities—Update of Authorized Beds

AGENCY: Department of Veterans Affairs.

ACTION: Proposed rule.

SUMMARY: The Department of Veterans Affairs (VA) proposes to amend its regulations regarding grants to States for construction or acquisition of State homes to update the maximum number of nursing home and domiciliary beds designated for each State and to amend the definition of ''State'' for purposes of these grants to include Guam, the

Northern Mariana Islands, and American Samoa.

DATES: Comments must be received on or before September 8, 2009.

ADDRESSES: Written comments may be submitted by: Mail or hand-delivery to Director, Regulations Management (02REG), Department of Veterans Affairs, 810 Vermont Avenue, NW., Room 1068, Washington, DC 20420; fax to (202) 273–9026; or e-mail at *http://www.regulations.gov*. Comments should indicate that they are submitted in response to ''RIN 2900–AM70—Grants to States for Construction or Acquisition of State Home Facilities—Update of Authorized Beds.'' All comments received will be available for public inspection in the Office of Regulation Policy and Management, Room 1063B, between the hours of 8 a.m. and 4:30 p.m., Monday through Friday (except holidays). Please call (202) 461–4902 for an appointment. (This is not a toll-free number.) In addition, during the comment period, comments may be viewed online through the Federal Docket Management System (FDMS) at *http://www.regulations.gov.*

FOR FURTHER INFORMATION CONTACT: James F. Burris, MD, Chief Consultant, Geriatrics and Extended Care State Home Construction Grant Program (114), Veterans Health Administration, Department of Veterans Affairs, 810 Vermont Avenue, NW., Washington, DC 20420, (202) 461–6774.

SUPPLEMENTARY INFORMATION: Congress has authorized VA to provide grants to States for the construction or acquisition of State home facilities for the provision of care to veterans. *See* 38 U.S.C. 8131–8138. The term ''State home'' means ''a home established by a State (other than a possession) for veterans disabled by age, disease, or otherwise who by reason of such disability are incapable of earning a living'' and ''includes such a home which furnishes nursing home care for veterans.'' 38 U.S.C. 101(19). For purposes of State home grants, the term ''State'' means each of the several States and Territories of the United States, the District of Columbia, and the Commonwealth of Puerto Rico, *see* 38 U.S.C. 101(20), but not possessions of the United States, *see* 38 U.S.C. 101(19), 8131(2). The Department of the Interior, which has administrative responsibility for coordinating Federal policy in Island groups in the Insular Area, has identified Guam and American Samoa as territories of the United States, and the Northern Mariana Islands as a Commonwealth in Political Union with the United States, which is treated as a U.S. territory for purposes of the State home grant program, see VAOPGCCONCL 10–98. The regulatory definition of the term ''State'' in current 38 CFR 59.2 already includes the several States, the District of Columbia, the Commonwealth of Puerto Rico, and the Virgin Islands. We propose to amend this definition to include Guam, the Northern Mariana Islands, and American Samoa.

Section 8134(a)(2) of title 38, U.S.C., mandates that VA prescribe for each State the number of nursing home and domiciliary beds for which grants may be furnished, which the proposed note to 38 CFR 59.40(a) would refer to as a State's ''unmet need'' number. To compute this number, VA estimates for each State the maximum number of nursing home and domiciliary beds needed by veterans in that State (which is the maximum number of such beds designated for each State, as shown on the chart in proposed § 59.40(a)), and then subtracts the number of existing State home beds plus the number of those beds under construction or that would be constructed in accordance with the State's grant applications. In addition, section 8134(a)(3) mandates that VA prioritize State home grant applications. The priorities set forth in the law require VA to compute whether a State applying for a grant has a great, significant, or limited need for State home beds. VA currently uses a State's ''unmet need'' number to determine whether the State has a great, significant, or limited need for new State home beds. *See* 38 CFR 59.50(e).

The Veterans Millennium Health Care and Benefits Act (the ''Act'') (Public Law 106–117, enacted on November 30, 1999) requires that, not less often than every four years, VA must review and, as necessary, revise the regulations concerning the maximum number of State home beds designated for each State. 38 U.S.C. 8134(a)(4). Section 8134(a)(2) requires that these numbers be based on the projected demand for nursing home and domiciliary care on November 30, 2009 (10 years after the date of enactment of the Act) by veterans who at such time are 65 years of age or older and who reside in that State. In 2001, VA originally established the maximum number of State home beds for each State based on the projected demand for such beds in 2009. *See* 66 FR 33845–46 (June 26, 2001). VA now believes that Congress intended VA to recalculate the maximum number of beds for each State based on the projected demand for care ten years in the future and that this method would be consistent with the Act's requirement for establishing maximum State home bed numbers. VA thus proposes to revise in proposed § 59.40(a) the maximum bed numbers based on the projected demand from veterans who, in 2020, are 65 years of age or older and who reside in that State.

To compute the maximum number of beds for each State in compliance with the Act, we first estimated the total number of veterans 65 years of age or older residing in each State, projected to the year 2020. We then totaled the projected population of these veterans at 8,672,045, which would be an increase from the 2000 projected population of such veterans in 2009. In computing these estimates, we considered many factors, such as movement of these veterans to new States, the mortality rate of these veterans, and the fact that the life expectancy of these veterans is projected to be longer than before. We then considered the projected total demand for nursing home and domiciliary beds in State homes. In 2000, we estimated the demand in 2009 would be for 55,299 State home beds nationwide. We believe that this estimated demand may also be used for 2020, despite the estimated increase in the projected veteran population, due to the many emerging alternatives to institutional long-term care and advancing technologies, such as Telehealth, Home-Based Primary Care, and Respite Care, and due to the fact that veterans are choosing to stay longer in their own homes. VA's philosophy is to provide extended care services in the least restrictive environment that is safe for the veteran, and whenever possible in non-institutional home and community-based settings. VA now provides a spectrum of non-institutional extended care services including home telehealth, homemaker/home health aide, skilled home care, home-based primary care, adult day healthcare, in-home respite care, and hospice and palliative care that were unavailable or not widely available in 2000. VA has been increasing the capacity to provide these services in recent years and will continue to do so in order to meet the demand. Many similar services are now available in the private sector through Medicare/Medicaid and long-term care insurance, and some veterans will choose to avail themselves of those services rather than seeking care from VA. The non-institutional services make it possible for many veterans who would otherwise require nursing home care to remain in their own homes, and reduce the need for additional nursing home beds. New technologic advances that may become available over the next decade, such as robotic assistive devices, will also reduce the need for additional nursing home beds. It is

likely that these trends will offset the growth in population and mean that no additional nursing home beds will be needed beyond those previously projected. Should these assumptions prove incorrect, VA will adjust the total number of beds in a future revision of this regulation. ''We are specifically interested in comments concerning this analysis and our estimate that the demand in 2020 for State home beds will be for 55,299 nationwide.

We allocated the 55,299 beds based on the percentage of veterans who in 2020 are projected to reside in each State. Although the projected total demand for State home beds nationwide will remain the same in 2020, some States will experience an increase and other States a decrease in the maximum number of beds that are eligible to receive a grant from the State Veterans Home Construction Grant program depending on the projected population of veterans 65 years of age or over for each State. The table below shows the changes in the maximum numbers of beds for each State. We would welcome comments regarding our projections for individual States.

State	Old max # of beds	New max # of beds (based on 2020 projections)	Difference (+/−)
Alabama	883	1007	124
Alaska	79	179	100
American Samoa	not applicable	0	0
Arizona	1068	1520	452
Arkansas	557	653	96
California	5754	4363	−1391
Colorado	717	1114	397
Connecticut	738	559	−179
Delaware	165	207	42
DC	104	83	−21
Florida	4471	4049	−422
Georgia	1202	1975	773
Guam	not applicable	12	12
Hawaii	216	268	52
Idaho	233	394	161
Illinois	2271	1754	−517
Indiana	1209	1216	7
Iowa	632	578	−54
Kansas	542	518	−24
Kentucky	759	818	59
Louisiana	785	638	−147
Maine	301	362	61
Maryland	1020	1102	82
Massachusetts	1348	944	−404
Michigan	1896	1786	−110
Minnesota	932	1058	126
Mississippi	500	480	−20
Missouri	1230	1257	27
Montana	198	281	83
Nebraska	355	371	16
Nevada	428	649	221
New Hampshire	264	361	97
New Jersey	1683	992	−691
New Mexico	344	417	73
New York	3220	2209	−1011
North Carolina	1454	1900	446
North Dakota	121	137	16
Northern Mariana Islands	not applicable	1	1
Ohio	2530	2143	−387
Oklahoma	747	766	19
Oregon	804	907	103
Pennsylvania	3173	2336	−837
Puerto Rico	350	288	−62
Rhode Island	254	157	−97
South Carolina	750	1089	339
South Dakota	155	179	24
Tennessee	1050	1311	261
Texas	3226	4119	893
Utah	304	426	122
Vermont	124	1312	1188
Virginia	1312	1903	591
Virgin Islands	8	12	4
Washington	1215	1687	472
West Virginia	455	406	−49
Wisconsin	1070	1062	−8
Wyoming	93	154	61

In prioritizing applications to receive grants, VA identifies States as having a ''great'', ''significant'', or ''limited'' need for additional beds. ''Great'' need is defined as a need for 2,000 or more new beds; ''significant'' need as a need for 1,000–1,999 new beds, and ''limited'' as a need for 999 or fewer new beds. A State that moves into a higher priority category as a result of the reallocation of beds in this rule will be more likely to receive a future grant than under the current allocation of beds. A State that moves into a lower priority category will be less likely to receive a future grant than under the current allocation of beds. A State that remains within the same priority category (even if the allocation of beds to the State increases or decreases) will have an equal likelihood of receiving a future grant under the new allocation as under the current allocation.

Our decision to use the same estimated demand for State home beds nationwide in 2020, as that which was projected for 2009, would not keep States from receiving grants for construction of new State home beds. At this time, there are 28,823 recognized State home beds. In addition, States are building facilities that when recognized will add 2,256 beds for a total of 31,079 beds. Therefore, States will soon have in use 56 percent of the total estimated number of State home beds needed in 2020. Of course, States will also need to replace existing State home facilities that become obsolete or otherwise need replacing. We thus believe that most States would continue to be able to apply for State home grants if that is what the State chooses to do.

Unfunded Mandates

The Unfunded Mandates Reform Act of 1995 (2 U.S.C 1532) requires that agencies prepare an assessment of anticipated costs and benefits before issuing any rule that may result in an expenditure by the State, local, or Tribal governments, in the aggregate, or by the private sector, of $100 million or more (adjusted annually for inflation) in any given year. This proposed rule would have no such effect on State, local, or Tribal governments, or on the private sector.

Executive Order 12866

Executive Order 12866 directs agencies to assess all costs and benefits of available regulatory alternatives and, when regulation is necessary, to select regulatory approaches that maximize net benefits (including potential economic, environmental, public health and safety, and other advantages; distributive impacts; and equity). The Executive Order classifies a ''significant regulatory action,'' requiring review by the Office of Management and Budget (OMB) unless OMB waives such review, as any regulatory action that is likely to result in a rule that may: (1) Have an annual effect on the economy of $100 million or more or adversely affect in a material way the economy, a sector of the economy, productivity, competition, jobs, the environment, public health or safety, or State, local, or Tribal governments or communities; (2) create a serious inconsistency or otherwise interfere with an action taken or planned by another agency; (3) materially alter the budgetary impact of entitlements, grants, user fees, or loan programs or the rights and obligations of recipients thereof; or (4) raise novel legal or policy issues arising out of legal mandates, the President's priorities, or the principles set forth in the Executive Order. VA has examined the economic, interagency, budgetary, legal, and policy implications of this proposed rule and has concluded that it does constitute a significant regulatory action under the Executive Order.

Paperwork Reduction Act

This document contains no provisions constituting a collection of information under the Paperwork Reduction Act of 1995 (44 U.S.C. 3501–3521).

Regulatory Flexibility Act

The Secretary hereby certifies that this proposed rule would not have a significant economic impact on a substantial number of small entities as they are defined in the Regulatory Flexibility Act, 5 U.S.C. 601–612. The proposed rule would affect grants to States and would not directly affect small entities. Therefore, pursuant to 5 U.S.C. 605(b), this proposed rule would be exempt from the initial and final regulatory flexibility analyses requirements of sections 603 and 604.

Catalog of Federal Domestic Assistance

The Catalog of Federal Domestic Assistance program number and title for this proposed rule is as follows: 64.005, Grants to States for Construction of State Home Facilities.

List of Subjects in 38 CFR Part 59

Administrative practice and procedure, Alcohol abuse, Alcoholism, Claims, Day care, Dental health, Drug abuse, Foreign relations, Government contracts, Grant programs—health, Grant programs—veterans, Health care, Health facilities, Health professions, Health records, Homeless, Medical and dental schools, Medical devices, Medical research, Mental health programs, Nursing homes, Reporting and recordkeeping requirements, Travel and transportation expenses, and Veterans.

Approved: April 3, 2009.

John R. Gingrich,

Chief of Staff, Department of Veterans Affairs.

For the reasons stated above, the Department of Veterans Affairs proposes to amend 38 CFR part 59 as follows:

PART 59—GRANTS TO STATES FOR CONSTRUCTION OR ACQUISITION OF STATE HOMES

1. The authority citation for part 59 is revised to read as follows:

Authority: 38 U.S.C. 101, 501, 1710, 1742, 8105, 8131–8138.

2. Amend § 59.2 by revising the definition of ''State'' to read as follows:

§ 59.2 Definitions.

* * * * *

State means each of the several States, the District of Columbia, the Virgin Islands, the Commonwealth of Puerto Rico, Guam, the Commonwealth of the Northern Mariana Islands, and American Samoa.

* * * * *

3. Amend § 59.40 by revising paragraph (a) to read as follows:

§ 59.40 Maximum number of nursing home care and domiciliary care beds for veterans by State.

(a) Except as provided in paragraph (b) of this section, a State may not request a grant for a project to construct or acquire a new State home facility, to increase the number of beds available at a State home facility, or to replace beds at a State home facility if the project would increase the total number of State home nursing home and domiciliary beds in that State beyond the maximum number designated for that State, as shown in the following chart. The provisions of 38 U.S.C. 8134 require VA to prescribe for each State the number of nursing home and domiciliary beds for which grants may be furnished (i.e., the unmet need). A State's unmet need for State home nursing home and domiciliary beds is the number in the following chart for that State minus the sum of the number of nursing home and domiciliary beds in operation at State home facilities and the number of State home nursing home and domiciliary beds not yet in operation but for which a grant has either been requested or awarded under this part.

State	Maximum number of state home nursing home & domiciliary beds based on 2020 projections
Alabama	1,007
Alaska	179
American Samoa	0
Arizona	1,520
Arkansas	653
California	4,363
Colorado	1,114
Connecticut	559
Delaware	207
District of Columbia	83
Florida	4,049
Georgia	1,975
Guam	12
Hawaii	268
Idaho	394
Illinois	1,754
Indiana	1,216
Iowa	578
Kansas	518
Kentucky	818
Louisiana	638
Maine	362
Maryland	1,102
Massachusetts	944
Michigan	1,786
Minnesota	1,058
Mississippi	480
Missouri	1,257
Montana	281
Nebraska	371
Nevada	649
New Hampshire	361
New Jersey	992
New Mexico	417
New York	2,209
North Carolina	1,900
North Dakota	137
Northern Mariana Islands	1
Ohio	2,143
Oklahoma	766
Oregon	907
Pennsylvania	2,336
Puerto Rico	288
Rhode Island	157
South Carolina	1,089
South Dakota	179
Tennessee	1,311
Texas	4,119
Utah	426
Vermont	142
Virginia	1,903
Virgin Islands	12
Washington	1,687
West Virginia	406
Wisconsin	1,062
Wyoming	154

Note to § 59.40(a): The provisions of 38 U.S.C. 8134 require that the ''unmet need'' numbers be based on a 10-year projection of demand for nursing home and domiciliary care by veterans who at such time are 65 years of age or older and who reside in that State. In determining the projected demand, VA must take into account travel distances for veterans and their families.

* * * * *

[FR Doc. E9–16341 Filed 7–9–09; 8:45 am]

BILLING CODE 8320–01–P

ENVIRONMENTAL PROTECTION AGENCY

40 CFR Part 52

[EPA–R09–OAR–2009–0344; FRL–8929–4]

Approval and Promulgation of Air Quality Implementation Plans; California

AGENCY: Environmental Protection Agency (EPA).

ACTION: Proposed rule.

SUMMARY: EPA is proposing to approve state implementation plan (SIP) revisions submitted by the State of California on June 15, 2004 and February 3, 2009, relating to reformulated gasoline (RFG) and diesel fuel sold or supplied as motor vehicle fuels in California. The revisions relating to RFG include California Phase 3 RFG (CaRFG3) regulations, correction of errors and streamlined requirements for compliance with and enforcement of the CaRFG3 standards, and an update to the State's predictive model to mitigate permeation emissions associated with the use of ethanol as a fuel additive. The revisions relating to diesel fuel establish test methods for determining the aromatic hydrocarbon content in diesel fuel and lower the maximum allowable sulfur content for motor vehicle diesel fuel.

DATES: Comments must be received on or before August 10, 2009.

ADDRESSES: Submit your comments, identified by Docket ID No. EPA–R09–OAR–2009–0344, by one of the following methods:

1. *Federal eRulemaking Portal: http://www.regulations.gov*. Follow the on-line instructions.

2. *E-mail: buss.jeffrey@epa.gov*.

3. *Mail or deliver:* Jeffrey Buss (Air-2), U.S. Environmental Protection Agency Region IX, 75 Hawthorne Street, San Francisco, CA 94105–3901.

Instructions: All comments will be included in the public docket without change and may be made available online at *http://www.regulations.gov*, including any personal information provided, unless the comment includes Confidential Business Information (CBI) or other information whose disclosure is restricted by statute. Information that you consider CBI or otherwise protected should be clearly identified as such and should not be submitted through *http://www.regulations.gov* or e-mail. *http://www.regulations.gov* is an ''anonymous access'' system, and EPA will not know your identity or contact information unless you provide it in the body of your comment. If you send e-mail directly to EPA, your e-mail address will be automatically captured and included as part of the public comment. If EPA cannot read your comment due to technical difficulties and cannot contact you for clarification, EPA may not be able to consider your comment.

Docket: The index to the docket for this action is available electronically at *http://www.regulations.gov* and in hard copy at EPA Region IX, 75 Hawthorne Street, San Francisco, California. While all documents in the docket are listed in the index, some information may be publicly available only at the hard copy location (*e.g.,* copyrighted material), and some may not be publicly available in either location (*e.g.,* CBI). To inspect the hard copy materials, please schedule an appointment during normal business hours with the contact listed in the **FOR FURTHER INFORMATION CONTACT** section.

FOR FURTHER INFORMATION CONTACT: Jeffrey Buss, EPA Region IX, (415) 947–4152, *buss.jeffrey@epa.gov.*

SUPPLEMENTARY INFORMATION: Throughout this document, ''we'', ''us'' and ''our'' refer to EPA.

I. General Information

A. Does This Action Apply to Me?

Regulated categories and entities potentially affected by this proposed action include:

Category	NAICSs codes [a]	SIC codes [b]	Examples of potentially regulated parties
Industry	324110	2911	Petroleum refiners.
Industry	422710 422720	5171 5172	Gasoline Marketers and Distributors.

[a] North American Industry Classification System (NAICS).
[b] Standard Industrial Classification (SIC) system code.

This table is not intended to be exhaustive, but rather provides a guide for readers regarding entities likely to be regulated by this proposed action. This table lists the types of entities that EPA is now aware could be potentially regulated by this action. Other types of entities not listed in the table could also be regulated. To determine whether an entity is regulated by this proposed action, one should carefully examine the RFG provisions at 40 CFR part 80. If you have questions regarding the applicability of this proposed action to a particular entity, consult the person listed in the preceding **FOR FURTHER INFORMATION CONTACT** section.

B. What Should I Consider as I Prepare My Comments for EPA?

1. Submitting CBI. Do not submit this information to EPA through EDOCKET, regulations.gov or e-mail. Clearly mark the part or all of the information that you claim to be CBI. For CBI information in a disk or CD–ROM that you mail to EPA, mark the outside of the disk or CD–ROM as CBI and then identify electronically within the disk or CD–ROM the specific information that is claimed as CBI). In addition to one complete version of the comment that includes information claimed as CBI, a copy of the comment that does not contain the information claimed as CBI must be submitted for inclusion in the public docket. Information so marked will not be disclosed except in accordance with procedures set forth in 40 CFR part 2.

2. Tips for Preparing Your Comments. When submitting comments, remember to:

i. Identify the rulemaking by docket number and other identifying information (subject heading, **Federal Register** date and page number).

ii. Follow directions—The agency may ask you to respond to specific questions or organize comments by referencing a Code of Federal Regulations (CFR) part or section number.

iii. Explain why you agree or disagree; suggest alternatives and substitute language for your requested changes.

iv. Describe any assumptions and provide any technical information and/or data that you used.

v. If you estimate potential costs or burdens, explain how you arrived at your estimate in sufficient detail to allow for it to be reproduced.

vi. Provide specific examples to illustrate your concerns, and suggest alternatives.

vii. Explain your views as clearly as possible, avoiding the use of profanity or personal threats.

viii. Make sure to submit your comments by the comment period deadline identified.

II. California Reformulated Gasoline and California Diesel Fuel Programs

A. What Is the SIP-Approved California Program for Reformulated Gasoline?

Gasoline sold in California is generally subject to federal standards promulgated by EPA pursuant to section 211(k) of the CAA.[1] The federal reformulated gasoline (RFG) program has had two phases. Phase I was effective from January 1, 1995 to December 31, 1999 and Phase II has been in effect since January 1, 2000. The Federal Phase II program is similar to the Phase I program but requires additional reductions in emissions of volatile organic compounds (VOCs), oxides of nitrogen (NO_X) and toxic air pollutants. In addition to the Federal standards, gasoline sold in California is also subject to standards set by the California Air Resources Board (CARB).[2] The California RFG program consists of three phases. California RFG Phase 1 was replaced by the more stringent requirements of California RFG Phase 2 (CaRFG2), effective March 1, 1996. CARB further strengthened its standards when it promulgated the California RFG Phase 3 (CaRFG3) regulations on August 3, 2000.

In 1994, EPA adopted exemptions from certain enforcement provisions in the Federal RFG regulations for refiners, blenders and importers of gasoline sold for use in California and subject to CaRFG2.[3] These exemptions were based on a comparison of CaRFG2 with Federal RFG Phase I, and later Federal RFG Phase II gasoline, and were based on the following findings:

(1) The emissions reductions from the CaRFG2 standards would be equal to or greater than the applicable Federal standards;

(2) The benzene content of CaRFG2 would be equivalent in practice to the Federal standards (as well as the then-applicable oxygen content standard in Federal RFG areas); and

(3) CARB's compliance and enforcement program was designed to be sufficiently rigorous to ensure that Federal requirements would be fulfilled in practice.

We approved the California Phase 1 and Phase 2 regulation[4] into the SIP on August 21, 1995 (60 FR 43379).

B. What Is the SIP-Approved Program for California Diesel Fuel?

On October 1, 1993, both Federal[5] and California standards for diesel fuel took effect. These standards required reductions in sulfur particulate and NO_X emissions from vehicles burning diesel fuel. While the programs were substantially similar, the California program set a more stringent standard for aromatic hydrocarbons than the Federal program. In addition, the California program applied to diesel fuel used in on-road applications, like the Federal program, but also for nonroad diesel vehicles like construction and farm equipment. We approved the California diesel fuel rules[6] on August 21, 1995 (60 FR 43379).

C. What Regulations Did the State Submit?

California Reformulated Gasoline

On June 15, 2004, the State submitted a series of amendments to the reformulated gasoline rules found in 13 CCR 2260–2272 as approved by EPA in 1995 and referenced in footnote 3. Specifically, on August 3, 2000, the State adopted amendments that

[1] *See* 40 CFR part 80, subparts D, E and F.

[2] Section 211(c)(4)(A) prohibits States (and political subdivisions of states) from prescribing or attempting to enforce controls or prohibitions respecting any fuel characteristic or component if EPA has prescribed a control or prohibition applicable to such fuel characteristic or component under section 211(c)(1). This preemption applies to all states except California, as explained in section 211(c)(4)(B). Thus, the SIP approval and boutique fuels provisions of 211(c)(4)(C) do not apply here.

[3] *See* 59 FR 7716, 7758 (February 16, 1994) and 63 FR 34818 (June 26, 1998). The original enforcement exemptions expired in 1999 when the Federal Phase II RFG started but, after comparing CaRFG2 and Federal Phase II RFG, we continued those exemptions. 64 FR 49992 (September 15, 1999).

[4] The California Reformulated Gasoline regulations, as contained in Title 13 of the California Code of Regulations (CCR), sections 2250, 2252, 2253.4, 2254, 2257, 2260, 2261, 2262.1, 2262.2, 2262.3, 2262.4, 2262.5, 2262.6, 2262.7, 2263, 2264, 2266–2272, 2296, and 2297, initially approved by CARB on November 17, 1988, and formally adopted on August 22, 1989, June 21, 1990, April 15, 1991, October 15, 1993, and August 24, 1994.

[5] *See* 55 FR 34120 (August 21, 1990). Specific CAA requirements for diesel fuel sulfur content are found in section 211(i). On August 21, 1990, EPA promulgated regulations pursuant to that section at 55 FR 34120. EPA subsequently established more stringent regulations for diesel sulfur content under the authority of section 211(c). *See, e.g.,* the current regulations in 40 CFR part 86. 66 FR 5001 (January 18, 2001). Section 211(c)(4)(A) prohibits states (and political subdivisions of states) from prescribing or attempting to enforce controls or prohibitions respecting any fuel characteristic or component if EPA has prescribed a control or prohibition applicable to such fuel characteristic or component under section 211(c)(1). This preemption applies to all states except California, as explained in section 211(c)(4)(B). Thus, the SIP approval and boutique fuels provisions of 211(c)(4)(C) do not apply here.

[6] The California Diesel Fuel regulations, as contained in 13 CCR 2281 and 2282, adopted on August 22, 1989, June 21, 1990, April 15, 1991, October 15, 1993, and August 24, 1994.

established the CaRFG3 standards and program, including revisions leading to the phase out of methyl tertiary-butyl ether (MTBE) as a gasoline oxygenate. Starting March 21, 2001, the State adopted a series of rulemakings to amend 13 CCR 2260–2272 regarding certain limits for denatured ethanol used in California gasoline and the model for ''California reformulated blendstock for oxygenate blending'' or ''CARBOB.'' These amendments also allowed certain small refiners to offset excess emissions from CaRFG3 with additional emission reductions from lowering the aromatic hydrocarbon content of diesel fuel. On May 1, 2003, the State adopted amendments to 13 CCR 2262.6 and 2263 that updated test methods used to comply with CaRFG3 regulations and also delayed the phase out of MTBE by one year to avoid disrupting the supply of gasoline in California.

On February 3, 2009, the State submitted revisions to the reformulated gasoline rules found in 13 CCR 2260, 2262, 2262.4, 2262.5, 2262.9, 2265 and 2266.5. These revisions were adopted by the State on November 18, 2004. Among other things, the revisions updated the procedure for evaluating alternative specifications for CaRFG3 using the California Predictive Model. Also, the State submitted new reformulated gasoline rules found in 13 CCR 2260(a)(0.5), (0.7), (6.9), (7.5), (8.5), (10.5), (10.7), (19.7), (19.8), (23.5), (23.7), (37), (38), 2262.3(d), 2264.2(a)(3), (b)(5), and (d), 2265(c)(4), 2265.1, 2265.5 and 2266(b)(3), (4), and (5); and revisions to the existing reformulated gasoline rules found in 13 CCR 2261, 2262, 2262.4, 2262.5, 2262.9, 2263, 2263.7, 2264.2, 2266, 2266.5, 2270, 2271 and 2273. These new rules and revisions were adopted by the State on August 7, 2008. Among other things these rules updated the California Predictive Model in the CaRFG3 regulations to mitigate permeation emissions associated with the use of ethanol as a fuel additive.

California Diesel Fuel

On February 3, 2009, the State submitted revisions to the diesel fuel rules found in 13 CCR 2281(c), 2282(b), 2282(c), and 2282(g). These revisions were adopted on June 4, 1997. Among other things, the revisions establish test methods for determining aromatic hydrocarbon content in diesel fuel. Because Sections 2281 and 2282 are incorporated by reference into the State's rules concerning exhaust and emission standards and test procedures, those rules [7] were amended to incorporate the new language as well. Also, the State submitted new diesel fuel rules found in 13 CCR 2284 and 2285 and amendments to the diesel fuel rules found in 13 CCR 2281 and 2282. Because these revisions pertain to rules that are incorporated by reference elsewhere, those rules were amended to reflect the new language in 13 CCR 2281 and 2282.[8] These rule changes, among other things, lowered the maximum allowable sulfur content for motor vehicle diesel fuel and were adopted by the State on July 15, 2004.

III. EPA Evaluation of California Reformulated Gasoline and California Diesel Fuel SIP Submittals

A. What Requirements Apply to These SIP Submittals?

Generally, SIP rules must be enforceable. *See* CAA section 110(a). Monitoring, recordkeeping, reporting and associated requirements generally ensure that the submitted rule can be enforced. In addition, section 110(l) of the CAA provides that EPA shall not approve a SIP revision if it would interfere with any applicable requirement concerning attainment and reasonable further progress or any other applicable requirement of the Act.

Some of the SIP revisions submitted by the State are non-substantive editorial or format changes. Some substantive changes are considered minor. Major substantive changes are discussed below. A detailed analysis of all revisions can be found in the Technical Support Document that accompanies this proposed action.

B. Are These SIP Submittals Approvable?

California Reformulated Gasoline (CaRFG3) Regulations and Subsequent Amendments

The applicable Federal requirements for reformulated gasoline are found in section 211(k) of the CAA. Section 211(k) directs EPA to set requirements for Federal RFG in certain ozone nonattainment areas, as well as ''anti-dumping'' requirements for the rest of the nation. The current requirements for Federal RFG include reductions in ozone-forming VOCs, NO_X, and toxic air pollutants from gasoline-powered motor vehicles. As stated above, the regulations for Federal RFG can be found at 40 CFR part 80, subparts D, E and F. In California, Federal RFG is required in the San Joaquin Valley, Los Angeles, San Diego and Sacramento.[9]

On December 21, 2005, we exempted refiners, blenders and importers of CaRFG3 from certain enforcement provisions in the Federal RFG regulations found at 40 CFR 80.81.[10] In extending the enforcement exemption to CaRFG3, we made the following determinations: (1) That emission reductions from CaRFG3 would be equal to or greater than the emission reductions from Federal Phase II RFG standards; (2) that the content standard for benzene in CaFRG3 would be equivalent in practice to the Federal Phase II RFG standard and that the oxygen content standard of 2.0 weight percent would be met in Federal RFG areas; [11] and (3) that the CARB compliance and enforcement program is sufficiently rigorous to ensure that Federal Phase II RFG requirements would be met in practice.

CARB's compliance and enforcement program has not changed since we made the above finding regarding its adequacy.[12] Therefore we are proposing to approve as meeting the requirements of CAA section 110(a) the CaRFG3 regulations and subsequent amendments to those regulations, submitted to us on February 3, 2009, to correct errors, allow additional compliance options, and update recordkeeping requirements. Moreover, because the submitted SIP revisions strengthen the requirements in the

[7] *See* 13 CCR 1956.8(b) and 13 CCR 1961.1(d), which include nonsubstantive changes that corrected the publication dates of certain documents incorporated by reference.

[8] *See* 13 CCR 1961 (Exhaust Emission and Test Standards—2004 and Subsequent Model Passenger Vehicles, Light-Duty Trucks and Medium-Duty Vehicles), 13 CCR 2701 (adding the definition of ''15 ppmw or less sulfur fuel''), and 17 CCR 93114 (applying the requirements of 13 CCR 2281, 2282 and 2284 to nonvehicular diesel fuel except diesel fuel solely for use in locomotives and marine engines).

[9] *See http://www.epa.gov/otaq/rfg/whereyoulive.htm* for a map and 40 CFR 80.70 for a list of covered areas in the State. A copy of the map has been placed in the docket for this rulemaking.

[10] See 70 FR 75914. The CaRFG3 regulations and related standards that are the subject of EPA's December 21, 2005 enforcement exemption represent the May 1, 2003 version of the California Reformulated Gasoline Regulations, 13 CCR 2250 *et seq.*

[11] In the Energy Policy Act of 2005 (Energy Act), Congress removed the oxygen content requirement for RFG found in Section 211(k) of the CAA. The Energy Act made this change immediately effective in California, and 270 days after enactment for the rest of the country. We published a direct final rule to remove the oxygen content requirement for RFG for gasoline produced and sold for use in California, thereby making the fuels regulations consistent with amended Section 211(k)at 71 FR 8965 (February 22, 2006).

[12] CARB's most recent annual enforcement report indicates that fuels inspection and enforcement cases are slightly higher now than when we approved the State's compliance and enforcement program in 2006. See ''2007 Annual Enforcement Report'' California Air Resources Board, May, 2008.

approved SIP, EPA has determined that approval of these regulations is consistent with CAA section 110(l).

California Diesel Fuel

As stated above, specific CAA requirements for reformulated diesel fuel are found in section 211(i) of the CAA. Additionally, EPA has promulgated diesel fuel regulations, known as the ''Highway and Nonroad Diesel Rule,'' pursuant to section 211(c) of the Act which improved fuel quality by lowering sulfur levels for onroad diesel fuel from 500 ppm to 15 ppm (''ultra-low sulfur diesel''), starting June 1, 2006.[13] This improvement allowed for the use of new technologies to reduce emissions from diesel engines.

Effective May 31, 2006, as part of technical amendments to its Highway and Nonroad Diesel Rule,[14] EPA exempted ''California diesel fuel'' from certain labeling, reporting and recordkeeping requirements.[15] The basis for this exemption was that California diesel was subject to requirements that equaled or exceeded the requirements for diesel fuel in the Highway and Nonroad Diesel Rule.

California regulations at 13 CCR 2281, proposed for approval in this action, impose a 15 ppm sulfur content standard in diesel fuel as of June 1, 2006 and this standard applies to diesel fuel used in intrastate locomotive and marine engines as of January 2007. Moreover, the California sulfur standard for diesel fuel does not include a temporary compliance option for highway diesel fuel or the small refiner and credit provisions included in the Federal program. Consequently, the California sulfur content standard for diesel fuel exceeds the requirements of the Federal ultra-low sulfur diesel program at 40 CFR 80.29.

California requires the use of ASTM standard D5186, a Supercritical Fluid Chromatography method, to measure the aromatic hydrocarbon content of diesel fuel. 13 CCR 2282(c). This method replaced ASTM D1319 which is a column chromatography method originally designed for use with gasoline. The replacement method, D5186, was developed for use with diesel fuels and is a more reliable measure of aromatic hydrocarbon content of diesel fuel. Consequently, this test method is an improvement over the past SIP-approved test method.

The State's compliance and enforcement program for diesel fuel is part of the fuels inspection program reviewed by EPA and found on December 21, 2005 to be sufficient to ensure that State standards for RFG would be met. Because the State's inspection program covers both RFG and diesel fuel, we make the same determination today for diesel fuel.

CARB's compliance and enforcement program for its diesel fuel program is the same as for California RFG. As stated above, we determined that the enforcement and compliance program for RFG was adequate in connection with our extension of our enforcement exemption to CaRFG3. Therefore, we are proposing to approve the State's revisions and amendments to its diesel fuel rules as meeting the requirements of CAA section 110(a). Moreover, because the submitted SIP revisions strengthen the approved SIP, EPA has determined that approval of these regulations is consistent with CAA section 110(l).

IV. EPA's Proposed Action

For the reasons discussed above, we are proposing to approve as revisions to the California SIP the California RFG regulations sold or supplied as motor vehicle fuel in California as submitted on June 15, 2004 and February 3, 2009. Additionally, we are proposing approval of the revisions to the diesel fuel regulations sold or supplied in California as submitted on February 3, 2009.

V. Administrative Requirements

Under Executive Order 12866 (58 FR 51735, October 4, 1993), this proposed action is not a ''significant regulatory action'' and therefore is not subject to review by the Office of Management and Budget. For this reason, this action is also not subject to Executive Order 13211, ''Actions Concerning Regulations That Significantly Affect Energy Supply, Distribution, or Use'' (66 FR 28355, May 22, 2001). This action merely proposes to approve state law as meeting Federal requirements and imposes no additional requirements beyond those imposed by State law. Accordingly, the Administrator certifies that this proposed rule will not have a significant economic impact on a substantial number of small entities under the Regulatory Flexibility Act (5 U.S.C. 601 *et seq.*). Because this action proposes to approve pre-existing requirements under state law and does not impose any additional enforceable duty beyond that required by state law, it does not contain any unfunded mandate or significantly or uniquely affect small governments, as described in the Unfunded Mandates Reform Act of 1995 (Pub. L. 104–4).

This proposed rule also does not have tribal implications because it will not have a substantial direct effect on one or more Indian tribes, on the relationship between the Federal Government and Indian tribes, or on the distribution of power and responsibilities between the Federal Government and Indian tribes, as specified by Executive Order 13175 (65 FR 67249, November 9, 2000). This proposed action also does not have Federalism implications because it does not have substantial direct effects on the States, on the relationship between the national government and the States, or on the distribution of power and responsibilities among the various levels of government, as specified in Executive Order 13132 (64 FR 43255, August 10, 1999). This proposed action merely proposes to approve a state rule implementing a Federal standard, and does not alter the relationship or the distribution of power and responsibilities established in the Clean Air Act. Executive Order 12898 establishes a Federal policy for incorporating environmental justice into Federal agency actions by directing agencies to identify and address, as appropriate, disproportionately high and adverse human health or environmental effects of their programs, policies, and activities on minority and low-income populations. Today's action involves proposed approvals of test methods for determining the aromatic hydrocarbon content in diesel fuel and the lowering of the maximum allowable sulfur content for motor vehicle diesel fuel in California; and corrects errors and streamline certain requirements for compliance and enforcement of the Phase III California RFG and update its predictive model to mitigate permeation emissions associated with the use of ethanol as a fuel additive. It will not have disproportionately high and adverse effects on any communities in the state, including minority and low-income communities.

This proposed rule also is not subject to Executive Order 13045 ''Protection of Children from Environmental Health Risks and Safety Risks'' (62 FR 19885, April 23, 1997), because it is not economically significant. The requirements of section 12(d) of the National Technology Transfer and Advancement Act of 1995 (15 U.S.C. 272 note) do not apply. This proposed rule does not impose an information collection burden under the provisions of the Paperwork Reduction Act of 1995 (44 U.S.C. 3501 *et seq.*).

[13] 40 CFR 80.29. *See* 66 FR 5001 (January 18, 2001). *See also* 70 FR 70498 (November 22, 2005) and 71 FR 25705 (May 1, 2006).

[14] *See* 71 FR 25705 (May 1, 2006).

[15] *See* 40 CFR 80.616.

List of Subjects in 40 CFR Part 52

Environmental protection, Air pollution control, Carbon monoxide, Hydrocarbons, Intergovernmental relations, Oxides of nitrogen, Ozone, Reporting and recordkeeping requirements, Volatile organic compounds.

Authority: 42 U.S.C. 7401 *et seq.*

Dated: June 30, 2009.

Jane Diamond,

Acting Regional Administrator, Region IX.

[FR Doc. E9–16364 Filed 7–9–09; 8:45 am]

BILLING CODE 6560–50–P

ENVIRONMENTAL PROTECTION AGENCY

40 CFR Part 52

[EPA–R06–OAR–2005–TX–0005; FRL–8928–7]

Approval and Promulgation of Air Quality Implementation Plans; Texas; Revisions to the 1-Hour Ozone Plan for the Beaumont/Port Arthur Area: Control of Air Pollution From Volatile Organic Compounds, Nitrogen Compounds, and Reasonably Available Control Technology

AGENCY: Environmental Protection Agency (EPA).

ACTION: Proposed rule.

SUMMARY: EPA is proposing to approve part of two Beaumont-Port Arthur (BPA) State Implementation Plan (SIP) revisions that were submitted separately by the State of Texas on October 15, 2005. The revisions being proposed pertain to volatile organic compound (VOC) control requirements for batch processing and ship building and ship repair, and also to Reasonably Available Control Technology (RACT) requirements, for the Beaumont/Port Arthur (BPA) 1-hour ozone serious nonattainment area. In today's action, EPA is proposing to approve: The State's changes to the batch process rules and the shipbuilding and ship repair rules that lower the threshold for affected sources of VOC emissions to the serious area requirements of 50 tons per year (tpy), and the State's demonstration that the BPA area meets RACT requirements for sources of VOC and NO_X emissions for the 1-hour ozone standard. These revisions meet statutory and regulatory requirements, and are consistent with EPA's guidance. The EPA is approving the revisions pursuant to section 110 and part D of the Federal Clean Air Act (the Act).

DATES: Written comments must be received on or before *August 10, 2009.*

ADDRESSES: Comments may be mailed to Mr. Guy Donaldson, Chief, Air Planning Section (6PD–L), Environmental Protection Agency, 1445 Ross Avenue, Suite 1200, Dallas, Texas 75202–2733. Comments may also be submitted electronically or through hand delivery/courier by following the detailed instructions in the Addresses section of the direct final rule located in the rules section of this **Federal Register**.

FOR FURTHER INFORMATION CONTACT: Ellen Belk, Air Planning Section (6PD–L), Multimedia Planning and Permitting Division, U.S. EPA, Region 6, 1445 Ross Avenue, Dallas, Texas 75202–2733, telephone (214) 665–2164; fax number 214–665–7263; e-mail address *belk.ellen@epa.gov.*

SUPPLEMENTARY INFORMATION: In the final rules section of this **Federal Register**, EPA is approving the State's SIP submittal as a direct final rule without prior proposal because the Agency views this as a noncontroversial submittal and anticipates no adverse comments. A detailed rationale for the approval is set forth in the direct final rule. If no relevant adverse comments are received in response to this action, no further activity is contemplated. If EPA receives adverse comments, the direct final rule will be withdrawn and all public comments received will be addressed in a subsequent final rule based on this proposed rule. EPA will not institute a second comment period. Any parties interested in commenting on this action should do so at this time. Please note that if EPA receives adverse comment on an amendment, paragraph, or section of this rule and if that provision may be severed from the remainder of the rule, EPA may adopt as final those provisions of the rule that are not the subject of an adverse comment.

For additional information, see the direct final rule, which is located in the rules section of this **Federal Register**.

Dated: June 29, 2009.

Miguel I. Flores,

Acting Regional Administrator, Region 6.

[FR Doc. E9–16271 Filed 7–9–09; 8:45 am]

BILLING CODE 6560–50–P

Notices

Federal Register
Vol. 74, No. 131
Friday, July 10, 2009

This section of the FEDERAL REGISTER contains documents other than rules or proposed rules that are applicable to the public. Notices of hearings and investigations, committee meetings, agency decisions and rulings, delegations of authority, filing of petitions and applications and agency statements of organization and functions are examples of documents appearing in this section.

DEPARTMENT OF AGRICULTURE

Forest Service

Proposed Amendment of Rogue River, Umpqua and Winema National Forest (NF) Land and Resource Management Plans for the Pacific Connector Gas Pipeline

AGENCY: Forest Service, USDA.

ACTION: Notice of intent to prepare an environmental impact statement for Land and Resource Management Plan amendments—Extension of Scoping Period.

SUMMARY: The USDA Forest Service is proposing to amend the Land and Resource Management Plans (LRMP) of the Rogue River (administered as the Rogue River-Siskiyou NF), Umpqua, and Winema (administered as the Fremont-Winema NF) National Forests to make provision for the proposed Pacific Connector Gas Pipeline (PCGP). The Federal Energy Regulatory Commission (FERC) is the lead agency for the environmental analysis of the construction and operation of the proposed natural gas pipeline (FERC Docket No. CP07–441–000). The FERC has prepared an environmental impact statement (EIS) that discusses the environmental impacts that could result from the construction and operation of the PCGP. FERC issued the FEIS for the PCGP on May 1, 2009.

The U. S. Department of Agriculture, Forest Service is a Cooperating Agency with the FERC in environmental analysis and preparation of the EIS for the PCGP. Certain features of the PCGP Project could not be made consistent with the LRMPs of the Rogue River, Umpqua and Winema National Forests because of the nature of pipeline construction. Therefore, in order to comply with the requirements of the National Forest Management Act (NFMA) the Forest Service must amend these LRMPs to make provision for the PCGP. This notice is extending the scoping period.

DATES: Comments concerning the scope of the analysis were originally requested 30 days from the date the original notice was published in the **Federal Register**, which was June 15, 2009 (FR Volume 74, No. 113, pg. 28214). Comments are now requested by July 31, 2009. The draft environmental impact statement for amendment of forest plans is expected to be published in August, 2009 and the final environmental impact statement is expected in December, 2009.

ADDRESSES: Send written comments to: Pam Sichting, Umpqua National Forest, 2900 NW., Stewart Parkway, Roseburg, OR 97471. Comments may also be sent via e-mail to: *comments-pacificnorthwest-umpqua@fs.fed.us,* or via facsimile to 541–957–3495. Comments may be hand-delivered to the above address Monday through Friday, from 8 a.m. till 4:30 p.m., excluding legal holidays.

Comments received in response to this solicitation, including names and addresses of those who comment, will be part of the public record for this proposed action. Comments submitted anonymously will be accepted and considered; however, anonymous comments will not provide the respondent with standing to appeal the subsequent decision.

FOR FURTHER INFORMATION CONTACT: Pam Sichting at 541–957–3342 or by e-mail at *psichting@fs.fed.us.* Individuals who use telecommunication devices for the deaf (TDD) may call the Federal Information Relay Service (FIRS) at 1–800–877–8339 between 8 a.m. and 8 p.m., Eastern Time, Monday through Friday.

SUPPLEMENTARY INFORMATION:

Extension of Scoping Period

Several requests were received during the initial scoping period for an extension of the scoping period because of the nature of the project. The Responsible Officials have decided it is in the best interest of the public to extend the time during which scoping comments are received.

Lead Agency

The Forest Service is the Lead Agency for amendments of Forest Plans.

Responsible Official

The Responsible Officials for amendments of the Rogue River, Umpqua and Winema LRMPs are respectively Forest Supervisors, Scott D. Conroy, Clifford J. Dils and Karen Shimamoto.

Nature of Decision To Be Made

The nature of the decision to be made is whether the respective LRMPs would be amended if the FERC authorizes the PCGP.

Scoping Process

This notice of intent extends the scoping process, which guides the development of the environmental impact statement. With this extension, the Forest Service is requesting public comments on the proposed amendments of the Rogue River, Umpqua and Winema NF LRMPs.

It is important that reviewers provide their comments at such times and in such manner that they are useful to the agency's preparation of the environmental impact statement. Therefore, comments should be provided prior to the close of the comment period, now July 31, 2009, and should clearly articulate the reviewer's concerns and contentions. The submission of timely and specific comments can affect a reviewer's ability to participate in subsequent administrative appeal or judicial review.

Dated: June 30, 2009.

Gina Freel.

Acting Forest Supervisor.

[FR Doc. E9–16384 Filed 7–9–09; 8:45 am]

BILLING CODE 3410–11–P

DEPARTMENT OF AGRICULTURE

Natural Resources Conservation Service

PL83–566 Watershed Protection and Flood Prevention Act Pocasset River Watershed, Providence County, RI

AGENCY: Natural Resources Conservation Service.

ACTION: Notice of Intent to Prepare an Environmental Impact Statement.

SUMMARY: Pursuant to Section 102(2) (C) of the National Environmental Policy Act of 1969; the Council of Environmental Quality Guidelines (40 CFR part 1500); and the Natural

Resources Conservation Service Guidelines (7 CFR part 650): The Natural Resources Conservation Service, U.S. Department of Agriculture, gives notice that an environmental impact statement is being prepared for Pocasset River Watershed, Providence County, Rhode Island.

FOR FURTHER INFORMATION CONTACT: Phoukham Vongkhamdy, State Conservationist, Natural Resources Conservation Service, 60 Quaker Lane, Suite 46, Warwick, RI 02886, telephone: (401) 828–1300.

SUPPLEMENTARY INFORMATION: The environmental assessment of this federally assisted action indicates that the project may cause significant local, regional, or national impacts on the environment. As a result of these findings, Phoukham Vongkhamdy, State Conservationist, has determined that the preparation and review of an environmental impact statement is needed for this project.

The project concerns flood prevention. Alternatives under consideration to reach these objectives include: A. Construction of six floodwall structures and flood proofing. B. No Action alternative.

A draft environmental impact statement will be prepared and circulated for review by agencies and the public. The Natural Resources Conservation Service invites participation and consultation of agencies and individuals that have special expertise, legal jurisdiction, or interest in the preparation of the draft environmental impact statement. Further information on the proposed action may be obtained from Phoukham Vongkhamdy, State Conservationist, at the above listed address or telephone (401) 828–1300.

Signed in Warwick, RI on July 1, 2009.

Phoukham Vongkhamdy,

State Conservationist.

(This activity is listed in the Catalog of Federal Domestic Assistance under No. 10.904—Watershed Protection and Flood Prevention—and is subject to the provisions of Executive Order 12372 which requires intergovernmental consultation with State and local officials.)

[FR Doc. E9–16337 Filed 7–9–09; 8:45 am]

BILLING CODE 3410–16–P

DEPARTMENT OF AGRICULTURE

Animal and Plant Health Inspection Service

[Docket No. APHIS–2009–0049]

Pale Cyst Nematode; Update of Quarantined Areas

AGENCY: Animal and Plant Health Inspection Service, USDA.

ACTION: Notice of changes to quarantined area.

SUMMARY: We are advising the public that we have made changes to the area in the State of Idaho that is quarantined to prevent the spread of pale cyst nematode. The description of the quarantined area was updated on April 8, 2009, when approximately 3,488 acres were removed from the quarantined area, and on May 8, 2009, when an additional 3,333 acres were removed from the quarantined area.

FOR FURTHER INFORMATION CONTACT: Ms. Eileen Y. Smith, National Program Manager, Emergency and Domestic Programs, PPQ, APHIS, 4700 River Road, Unit 150, Riverdale, MD 20737–1236; (301) 734–5235.

SUPPLEMENTARY INFORMATION:

Background

The pale cyst nematode (PCN, *Globodera pallida*) is a major pest of potato crops in cool-temperature areas. Other solanaceous hosts include tomatoes, eggplants, peppers, tomatillos, and some weeds. The PCN is thought to have originated in Peru and is now widely distributed in many potato-growing regions of the world. PCN infestations may be expressed as patches of poor growth. Affected potato plants may exhibit yellowing, wilting, or death of foliage. Even with only minor symptoms on the foliage, potato tuber size can be affected. Unmanaged infestations can cause potato yield loss ranging from 20 to 70 percent. The spread of this pest in the United States could result in a loss of domestic or foreign markets for U.S. potatoes and other commodities.

The PCN quarantine regulations (§§ 301.86 through 301.86–9, referred to below as the regulations) set out procedures for determining the areas quarantined for PCN and impose restrictions on the interstate movement of regulated articles from quarantined areas.

Section 301.86–3 of the regulations sets out the procedures for determining the areas quarantined for PCN. Paragraph (a) of § 301.86–3 states that, in accordance with the criteria listed in § 301.86–3(c), the Administrator will designate as a quarantined area each field that has been found to be infested with PCN, each field that has been found to be associated with an infested field, and any area that the Administrator considers necessary to quarantine because of its inseparability for quarantine enforcement purposes from infested or associated fields.

Paragraph (c) provides that the Administrator will designate a field as an infested field when PCN is found in the field. Paragraph (c) also provides that the Administrator will designate a field as an associated field when PCN host crops, as listed in § 301.86–2(b), have been grown in the field in the last 10 years and the field shares a border with an infested field; the field came into contact with a regulated article listed in § 301.86–2 from an infested field within the last 10 years; or, within the last 10 years, the field shared ownership, tenancy, seed, drainage or runoff, farm machinery, or other elements of shared cultural practices with an infested field that could allow spread of PCN, as determined by the Administrator.

Paragraph (b) describes the conditions for the designation of an area less than an entire State as a quarantined area. Less than an entire State will be designated as a quarantined area only if the Administrator determines that:

- The State has adopted and is enforcing restrictions on the intrastate movement of the regulated articles that are equivalent to those imposed by the regulations on the interstate movement of regulated articles; and
- The designation of less than the entire State as a quarantined area will prevent the interstate spread of PCN.

We have determined that it is not necessary to designate the entire State of Idaho as a quarantined area. Idaho has adopted and is enforcing restrictions on the intrastate movement of regulated articles from that area that are equivalent to those we are imposing on the interstate movement of regulated articles.

Paragraph (d) provides for the removal of fields from quarantine. An infested field will be removed from quarantine when a protocol approved by the Administrator as sufficient to support the removal of infested fields from quarantine has been completed and the field has been found to be free of PCN. An associated field will be removed from quarantine when the field has been found to be free of PCN according to a protocol approved by the Administrator as sufficient to support removal of associated fields from quarantine. Any area other than infested or associated fields which has been

quarantined by the Administrator because of its inseparability for quarantine enforcement purposes from infested or associated fields will be removed from quarantine when the relevant infested or associated fields are removed from quarantine.

Paragraph (a) of § 301.86–3 further provides that the Administrator will publish the description of the quarantined area on the Plant Protection and Quarantine (PPQ) Web site, *http://www.aphis.usda.gov/plant_health/plant_pest_info/potato/pcn.shtml*. The description of the quarantined area will include the date the description was last updated and a description of the changes that have been made to the quarantined area. The description of the quarantined area may also be obtained by request from any local office of PPQ; local offices are listed in telephone directories. Finally, paragraph (a) establishes that, after a change is made to the quarantined area, we will publish a notice in the **Federal Register** informing the public that the change has occurred and describing the change to the quarantined area.

We are publishing this notice to inform the public of changes to the PCN quarantined area in accordance with § 301.86–3(a). On April 8, 2009, we updated the quarantined area to remove approximately 3,488 acres. On May 8, 2009, we updated the quarantined area to remove an additional 3,333 acres. This acreage was composed of associated fields that were found to be free of PCN according to a survey protocol approved by the Administrator as sufficient to support removal of associated fields from quarantine, under § 301.86–3. The fields removed from quarantine were in Bingham, Bonneville, and Jefferson Counties.

The current map of the quarantined area can be viewed on the PPQ Web site at *http://www.aphis.usda.gov/plant_health/plant_pest_info/potato/pcn.shtml*.

Authority: 7 U.S.C. 7701–7772 and 7781–7786; 7 CFR 2.22, 2.80, and 371.3.

Done in Washington, DC, this 6th day of July 2009.

Kevin Shea,

Acting Administrator, Animal and Plant Health Inspection Service.

[FR Doc. E9–16340 Filed 7–9–09; 8:45 am]

BILLING CODE 3410–34–P

DEPARTMENT OF AGRICULTURE

Forest Service

Proposed Fee

Authority: Federal Lands Recreation Enhancement Act, (Title VIII, Pub. L. 108–447)

AGENCY: Okanogan-Wenatchee National Forest, USDA Forest Service.

ACTION: Notice.

SUMMARY: The Okanogan-Wenatchee National Forest, Naches Ranger District, proposes to charge new fees at four recreation sites. A $5.00 per vehicle per night charge at Ponderosa Camp, Lost Meadow, Longmire Meadow and Long Meadow camp areas in the Little Naches drainage is under consideration. The fee would not apply to any towed vehicle(s). Fees are assessed based on the level of amenities and services provided, cost of operation and maintenance, market assessment, and public comment. Revenue generated would be used for operation and maintenance of existing facilities at the sites, increased services, and potential future improvements. The fees listed are only proposed and will be determined upon further analysis and public comment.

DATES: Submit comments on or before January 31, 2010. The proposed fee could be implemented as soon as May 2010.

ADDRESSES: Address all comments to Randall Shepard, Naches District Ranger, 10237 US Highway 12, Naches, Washington 98937, (509) 653–1401. Submit electronic comments and other data to *jbeidl@fs.fed.us*.

FOR FURTHER INFORMATION CONTACT: Jacqueline Beidl (509) 653–1432.

SUPPLEMENTARY INFORMATION: The Federal Recreation Lands Enhancement Act (Title VII, Pub. L. 108–447) directed the Secretary of Agriculture to publish a six month advance notice in the **Federal Register** whenever new recreation fee areas are established.

Once public involvement is complete, these new fees will be reviewed by a Recreation Resource Advisory Committee prior to a final decision and implementation.

Dated: July 6, 2009.

Randall Shepard,

District Ranger.

[FR Doc. E9–16330 Filed 7–9–09; 8:45 am]

BILLING CODE 3410–11–P

COMMISSION ON CIVIL RIGHTS

Agenda and Notice of Public Meeting of the Texas Advisory Committee

Notice is hereby given, pursuant to the provisions of the rules and regulations of the U.S. Commission on Civil Rights (Commission), and the Federal Advisory Committee Act (FACA), that a meeting of the Texas Advisory Committee (Committee) to the Commission will convene on Thursday, August 6, 2009 at 1 p.m. and adjourn at 4 p.m. at the Committee Room, State Capitol, 1100 Congress Ave., Austin, Texas. The purpose of the meeting is for the Committee to plan activities for fiscal year 2010.

Members of the public are entitled to submit written comments. The comments must be received in the regional office by September 6, 2009. The address is U.S. Commission on Civil Rights, 300 North Los Angeles St., Suite 4333, Los Angeles, CA 90012. Persons wishing to e-mail their comments, or to present their comments verbally at the meeting, or who desire additional information should contact Peter Minarik, Regional Director, Western Regional Office, at (213) 894–3437 or 800–877–8339 for individuals who are deaf, hearing impaired, and/or have speech disabilities or by e-mail to *pminarik@usccr.gov*.

Hearing-impaired persons who will attend the meeting and require the services of a sign language interpreter should contact the Regional Office at least ten (10) working days before the scheduled date of the meeting.

Records generated from this meeting may be inspected and reproduced at the Western Regional Office, as they become available, both before and after the meeting. Persons interested in the work of this advisory committee are advised to go to the Commission's Web site, *http://www.usccr.gov*, or to contact the Western Regional Office at the above e-mail or street address.

The meeting will be conducted pursuant to the provisions of the rules and regulations of the Commission and FACA.

Dated in Washington, DC, July 7, 2009.

Peter Minarik,

Acting Chief, Regional Programs Coordination Unit.

[FR Doc. E9–16356 Filed 7–9–09; 8:45 am]

BILLING CODE 6335–01–P

COMMISSION ON CIVIL RIGHTS

Agenda and Notice of Public Meeting of the Florida Advisory Committee

Notice is hereby given, pursuant to the provisions of the rules and regulations of the U.S. Commission on Civil Rights (Commission), and the Federal Advisory Committee Act (FACA), that a meeting of the Florida Advisory Committee (Committee) to the Commission will convene on Tuesday, July 28, 2009 at 1:30 p.m. and adjourn at approximately 3:30 p.m. at Brevard Community College, Carver Administration Building 2, Room 161, 1519 Clearlake Road, Cocoa, Florida. The purpose of the meeting is to discuss the Committee's report on fair housing enforcement. Members of the public are entitled to submit written comments. The comments must be received in the regional office by August 28, 2009. The address is U.S. Commission on Civil Rights, 61 Forsyth St., SW., Suite 18T40, Atlanta, GA 30303. Persons wishing to e-mail their comments, or to present their comments verbally at the meeting, or who desire additional information should contact Peter Minarik, Regional Director, Southern Regional Office, at (404) 562–7000 or 800–877–8339 for individuals who are deaf, hearing impaired, and/or have speech disabilities or by e-mail to *pminarik@usccr.gov.*

Hearing-impaired persons who will attend the meeting and require the services of a sign language interpreter should contact the Regional Office at least ten (10) working days before the scheduled date of the meeting.

Records generated from this meeting may be inspected and reproduced at the Southern Regional Office, as they become available, both before and after the meeting. Persons interested in the work of this advisory committee are advised to go to the Commission's Web site, *http://www.usccr.gov*, or to contact the Southern Regional Office at the above e-mail or street address.

The meeting will be conducted pursuant to the provisions of the rules and regulations of the Commission and FACA.

Dated in Washington, DC, July 7, 2009.

Peter Minarik,

Acting Chief, Regional Programs Coordination Unit.

[FR Doc. E9–16357 Filed 7–9–09; 8:45 am]

BILLING CODE 6335–01–P

COMMISSION ON CIVIL RIGHTS

Agenda and Notice of Public Meeting of the Oklahoma Advisory Committee

Notice is hereby given, pursuant to the provisions of the rules and regulations of the U.S. Commission on Civil Rights (Commission), and the Federal Advisory Committee Act (FACA), that a meeting of the Oklahoma Advisory Committee to the Commission will convene on Tuesday, August 18, 2009 at 10 a.m. and adjourn at approximately 3 p.m. at Langston University Oklahoma City Campus, Room 133, 4205 N. Lincoln Blvd., Oklahoma City, OK. The purpose of the meeting is to plan a future civil rights project and receive briefing information from local civil rights groups.

Members of the public are entitled to submit written comments. The comments must be received in the regional office by September 18, 2009. The address is U.S. Commission on Civil Rights, 400 State Avenue, Suite 908, Kansas City, Kansas 66101. Persons wishing to e-mail their comments, or to present their comments verbally at the meeting, or who desire additional information should contact Farella E. Robinson, Regional Director, Central Regional Office, at (913) 551–1400, or for hearing impaired TDD (913) 551–1414, or by e-mail to *frobinson@usccr.gov.*

Hearing-impaired persons who will attend the meeting and require the services of a sign language interpreter should contact the Regional Office at least ten (10) working days before the scheduled date of the meeting.

Records generated from this meeting may be inspected and reproduced at the Central Regional Office, as they become available, both before and after the meeting. Persons interested in the work of this advisory committee are advised to go to the Commission's Web site, *http://www.usccr.gov*, or to contact the Central Regional Office at the above e-mail or street address.

The meeting will be conducted pursuant to the provisions of the rules and regulations of the Commission and FACA.

Dated in Washington, DC, July 7, 2009.

Peter Minarik,

Acting Chief, Regional Programs Coordination Unit.

[FR Doc. E9–16359 Filed 7–9–09; 8:45 am]

BILLING CODE 6335–01–P

DEPARTMENT OF COMMERCE

[Docket No. 090520919–91106–02]

RIN 0648–XP44

National Environmental Policy Act—Categorical Exclusions

AGENCY: U.S. Department of Commerce.

ACTION: Notice.

SUMMARY: The U.S. Department of Commerce (DOC) publishes these Categorical Exclusions (CEs) of actions that the agency has determined do not individually or cumulatively have a significant effect on the human environment and, thus, should be categorically excluded from the requirement to prepare an environmental assessment or environmental impact statement under the National Environmental Policy Act.

DATES: This notice is effective July 10, 2009.

ADDRESSES: This notice and the Department of Commerce Administrative Record for the Categorical Exclusions is available at: *http://www.nepa.noaa.gov/procedures.html* under ''Department of Commerce Administrative Record and Categorical Exclusions.''

FOR FURTHER INFORMATION CONTACT: Written requests for a hard copy of the ''Department of Commerce Administrative Record and Categorical Exclusions'' should be submitted to: Steve Kokkinakis, National Oceanic and Atmospheric Administration (NOAA), Office of Program Planning & Integration, SSMC3, Room 15723, 1315 East-West Highway, Silver Spring, MD 20910, phone (301) 713–1622, x189.

SUPPLEMENTARY INFORMATION:

I. National Environmental Policy Act

The National Environmental Policy Act (NEPA) (42 U.S.C. 4321 *et seq.*) requires that Federal agencies prepare environmental impact statements for major Federal actions that may ''significantly affect the quality of the human environment.'' NEPA requirements apply to any Federal project, decision, or action, including grants that might have a significant impact on the quality of the human environment. NEPA also established the Council on Environmental Quality (CEQ), which issued regulations implementing the procedural provisions of NEPA. Among other considerations, the CEQ regulations require Federal agencies to adopt their own implementing procedures to supplement the Council's regulations, and to establish and use Categorical

Exclusions (CEs) to define categories of actions that do not individually or cumulatively have a significant effect on the human environment. These particular actions, therefore, do not require preparation of an environmental assessment or environmental impact statement as required by NEPA. The need for Department-wide CEs was identified during recent efforts to standardize policy and procedures for all Department of Commerce grant and cooperative agreement programs.

The Department of Commerce published a request for public comments on Department-wide CEs in the **Federal Register** on May 26, 2009 (74 FR 24782). The public comment was invited for a 20-day period ending on June 15, 2009. Three comments were received representing 1 organization, 1 individual, and a Federal agency. All comments were fully considered and in fact many recommendations were adopted in this final notice. Every effort has been made to respond in detail to every question raised or suggestion offered.

II. Comments and Agency Response

Comment #1

The National Association of Home Builders (NAHB) commented that they ''soundly supports the categorical exclusions proposed by DOC and encourages the agency to largely finalize them as proposed.'' Furthermore, NAHB ''applauds the broad scope of this proposed categorical exclusion (A–1, Minor Renovations and Additions) and urges its finalization.'' With reference to Categorical Exclusion A–2, New Construction Upon or Improvement of Land, NAHB a clarification was asked regarding the terms ''developed area or previously disturbed site'' and construction ''are consistent with those of existing, adjacent, or nearby buildings''. Additionally, with regard to Categorical Exclusion A–2, NAHB requests that the Department reconsider the use of a Record of Environmental Consideration as being unnecessary and adding to the amount of paperwork required to comply with NEPA regulations. NAHB further suggests that the use of an Environmental Checklist would help identify those projects with potential impacts early in the process and would not penalize all project proponents.

Agency Response

The terms ''developed area and previously disturbed site'' and ''The site and scale of construction or improvement are consistent with those of existing, adjacent, or nearby buildings'' found in Categorical Exclusion A–2 New Construction Upon or Improvement of Land is deemed by the Department to be sufficiently descriptive to determine the appropriate use of this Categorical Exclusion. Please also note that the terms are contained in the legacy categorical exclusions are used by the U.S. Coast Guard and the Federal Emergency Management Agency.

To clarify the Department's use of a Record of Environmental Consideration (REC), the REC is a signed statement submitted with project documentation that briefly documents that a proposed action has received environmental review. It is the minimal level of documentation needed to ensure a Categorical Exclusion is appropriate for the project. When used to support a Categorical Exclusion, the REC will include the Department's environmental checklist and will provide verification that no extraordinary circumstances exist that may invalidate the use of the Categorical Exclusion. It is not envisioned to duplicate documentation that would be available elsewhere and as such does not add additional paperwork to the process.

The Department agreed with NAHB's assessment that an environmental checklist would add value to the NEPA process and is in the process of finalizing that document at this time. The environmental checklist will assist the Department in determining if there are any extraordinary circumstances that would preclude the use of the Categorical Exclusion and what level of NEPA documentation would be required. The completed checklist will be appended to the Department's Record of Consideration at the conclusion of the Office of Management and Budget's review and a Notice of Action will be published in the **Federal Register** announcing the approval of the information collection.

Comment #2

The National Capital Planning Commission (NCPC) requested a modification to three proposed categorical exclusions.

Agency Response

DOC agrees with the comment and has inserted the suggested language into the three Categorical Exclusions identified by NCPC.

Comment #3

The Department also received a comment from an individual that disagreed with changing NEPA in any way and does not favor any changes proposed by the Department.

Agency Response

Comment Noted. The Department does not propose to change NEPA and issuing the CEs in accordance with NEPA.

III. Department of Commerce Categorical Exclusions

The Department adopts the following CEs and amends the Department Administrative Order 216–6, ''Implementing the National Environmental Policy Act'' to include the following CEs. The Department also amends the DAO to require that all projects involving a Federal action will be required to complete the ''Departmental NEPA Checklist.'' The Departmental NEPA Checklist will assist the Department in determining the appropriate level of NEPA documentation. The Departmental NEPA Checklist is available at *http://www.nepa.noaa.gov/procedures.html* under ''Department of Commerce NEPA Checklist.'' The checklist is divided into two sections. Section One is to be completed for those projects that have historically been shown to not create significant environmental impacts to the human or natural environment. Projects consisting solely of administrative or personnel actions, production of informational materials, purchase of electronic equipment for use in existing buildings, and minor interior renovations are subject to Section One of the checklist. Section Two is to be complete for those projects involving ground disturbance or that have the potential for significant impacts to the human or natural environment. Any project required to fill out Section Two that receives a ''YES'' answer in any category is not permitted to use a CE and will be required to prepare an Environmental Assessment (EA) or an Environmental Impact Statement (EIS) as appropriate. Moreover, the National Historic Preservation Act requirements still apply to all applicable projects. The use of these CEs does not constitute a release from Section 106 consultation requirements.

Department-Wide Categorical Exclusions

A–1 Minor renovations and additions to buildings, roads, airfields, grounds, equipment, and other facilities that do not result in a change in the functional use of the real property (*e.g.* realigning interior spaces of an existing building, adding a small storage shed to an existing building, retrofitting for energy conservation, or installing a small antenna on an already existing antenna tower that does not cause the total

height to exceed 200 feet and where the FCC would not require an environmental assessment or environmental impact statement for the installation). This CE does not apply in instances where the project must be submitted to the National Capital Planning Commission (NCPC) for review and NCPC determines that it does not have an applicable Categorical Exclusion.

This CE is supported by long-standing categorical exclusions and administrative records. In particular, the review panel identified the legacy categorical exclusions and Environmental Assessments from the U.S. Department of Agriculture, Federal Emergency Management Agency, Federal Aviation Administration, U.S. Coast Guard, U.S. Air Force, and the Immigration and Naturalization Services. Further, the review panel found that Environmental Assessments of a similar nature, scope, and intensity were performed at EDA, NOAA, U.S. Department of Agriculture, Federal Law Enforcement Training Center and the U.S. Border Patrol without significant environmental impacts.

A–2 New construction upon or improvement of land where all of the following conditions are met:

(a) The site is in a developed area and/or a previously disturbed site,

(b) The structure and proposed use are compatible with applicable Federal, Tribal, State, and local planning and zoning standards and consistent with Federally approved State coastal management programs,

(c) The proposed use will not substantially increase the number of motor vehicles at the facility or in the area,

(d) The site and scale of construction or improvement are consistent with those of existing, adjacent, or nearby buildings, and

(e) The construction or improvement will not result in uses that exceed existing support infrastructure capacities (roads, sewer, water, parking, *etc.*).

This CE does not apply where the project must be submitted to the National Capital Planning Commission (NCPC) for review and NCPC determines that it does not have an applicable Categorical Exclusion.

DOC is not a major land managing agency in the Federal government. Department activities involving new construction or improvements of land typically involve single buildings and supporting infrastructure in a single locality. Any potential for environmental impacts would be of a small scale and confined to more localized impacts.

The review panel identified an internal Departmental EA from EDA that resulted in a Finding of No Significant Impact and legacy categorical exclusions and Findings of No Significant Impact from the U.S. Coast Guard, Federal Emergency Management Agency, U.S. Navy, and the U.S. Border Patrol. EDA issues construction grants to stimulate economic development. Both NOAA and the U.S. Coast Guard manage a large number of facilities in sensitive aquatic environments along all maritime coasts and several rivers. The National Aeronautics and Space Administration has a large number of specialty buildings used to help develop and promote the nation's space program. Legacy categorical exclusions from the Federal Emergency Management Agency include public assistance programs that could be implemented in any part of the United States to assist in preparing and recovering from a disaster. Additionally, legacy categorical exclusions from the U.S. Navy allow minor construction under circumstances identical to those proposed under this DOC CE. The U.S. Border Patrol brought a legacy of environmental assessments and findings of no significant impact for its land based activities. Based upon this extensive history of environmental analyses and the experience of its members, the review panel found that actions of a similar nature, scope, and intensity were performed throughout the Federal government without significant environmental impacts.

Since new construction or improvements on land could involve numerous considerations, the review panel took great care to establish limiting provisions to avoid the potential for significant impacts to the human environment. The following limiting provisions were established to both conform to the evidence presented in the administrative record, to clarify meaning of those limiting provisions found in the administrative record, or to add to or modify limitations found in the record based on the experience of the review panel members to further avoid the potential for significant impacts to the human environment:

(a) The site is in a developed area and/or a previously disturbed site;

(b) The structure and proposed use are compatible with applicable Federal, Tribal, State, and local planning and zoning standards and consistent with Federally approved state coastal management programs (pursuant to the Coastal Zone Management Act);

(c) The proposed use will not substantially increase the number of motor vehicles at the facility or in the area;

(d) The site and scale of construction or improvement are consistent with those of existing, adjacent, or nearby buildings; and

(e) The construction or improvement will not result in uses that exceed existing support infrastructure capacities (roads, sewer, water, parking, *etc.*).

As a result of all of these limitations, the review panel determined that this Categorical Exclusion contemplated activities that would inherently have no potential for significant impacts to the human environment.

The review panel defined this CE to be sufficiently related to actions that may involve one or more extraordinary circumstances. To ensure that only those actions having negligible impacts on the human environment are contemplated by this CE, the review panel proposed that a Record of Environmental Consideration be prepared to document the determination whether the action is either appropriately categorically excluded or whether it requires further analysis through an EA or EIS process.

A–3 Software development, data analysis, or testing, including but not limited to computer modeling in existing facilities.

Research, development, testing, and evaluation activities or laboratory operations contemplated by this CE are those that would be undertaken within facilities that are operated under stringent requirements designed to protect the quality of the human environment. As exemplified by documents in the administrative record, these requirements include strict operating procedures governing laboratory operations and personnel responsibilities. Because of these controls, these types of laboratory activities have no potential for significant environmental impacts. Further, the Panel found that actions of a similar nature, scope, and intensity were performed in laboratories throughout the Federal government.

This CE is supported by long-standing categorical exclusions and administrative records. In particular, the review panel identified legacy categorical exclusions from Federal Emergency Management Agency, U.S. Department of Agriculture, U.S. Department of Energy, the U.S. Department of the Interior, and the U.S. Navy. Additionally, the review panel identified EAs that resulted in Findings of No Significant Impact from NOAA

and the National Aeronautics and Space Administration.

A–4 Siting/construction/operation of microwave/radio communication towers less than 200 feet in height without guy wires on previously disturbed ground.

DOC, through NTIA is involved in issuing grants for siting, construction, operation, and maintenance, communications systems and similar electronic equipment. These types of electronic equipment are essential to support the nationwide telecommunications network.

This CE is supported by Findings of No Significant Impact on the recently completed Programmatic EA for NTIA and on EAs from the U.S. Department of Energy. Furthermore, this CE is supported by long-standing categorical exclusions from the Federal Emergency Management Agency.

A–5 Retrofit/upgrade existing microwave/radio communication towers that do not require ground disturbance.

This CE is supported by the recently completed Programmatic EA for NTIA with a Finding of No Significant Impact and an EA for the National Aeronautics and Space Administration, also with a Finding of No Significant Impact.

A–6 Adding fiber optic cable to transmission structures or burying fiber optic cable in existing transmission line rights-of-way.

This CE is supported by a long-standing categorical exclusion with the U.S. Department of Energy and Findings of No Significant Impact on Environmental Assessments prepared for the Bureau of Land Management, Vandenberg Air Force Base, the U.S. Park Service, and the Tennessee Valley Authority.

A–7 Acquisition, installation, operation, and removal of communications systems, data processing equipment, and similar electronic equipment.

This CE is supported by a legacy categorical exclusion from the U.S. Department of Energy and Findings of No Significant Impact on several Description Memorandums from the U.S. Department of Energy.

A–8 Planning activities and classroom-based training and classroom-based exercises using existing conference rooms and training facilities.

This CE is supported by a long-standing categorical exclusion with the U.S. Department of Energy and a Finding of No Significant Impact on an Environmental Assessment from the recently completed Programmatic EA for NTIA.

A–9 Purchase of mobile and portable equipment and infrastructure which is stored in previously existing structures or facilities.

This CE is supported by a long-standing categorical exclusion with the U.S. Coast Guard and a Finding of No Significant Impact on an EA from the recently completed Programmatic EA for NTIA.

A–10 Siting, construction (or modification), and operation of support buildings and support structures (including, but not limited to, trailers and prefabricated buildings) within or contiguous to an already developed area (where active utilities and currently used roads are readily accessible). This CE does not apply where the project must be submitted to the National Capital Planning Commission (NCPC) for review and NCPC determines that it does not have an applicable Categorical Exclusion.

This CE is supported by a long-standing categorical exclusion with the U.S. Department of Energy and two Memoranda for File for relevant projects and their supporting documentation that indicated insignificant impacts, also with the U.S. Department of Energy.

A–11 Personnel, fiscal, management, and administrative activities, such as recruiting, processing, paying, recordkeeping, resource management, budgeting, personnel actions, and travel.

The actions contemplated by this CE are a variety of administrative activities that have no inherent potential for significant environmental impacts. This CE is supported by long-standing categorical exclusions from the U.S. Coast Guard, U.S. Navy, Federal Emergency Management Agency, U.S. Air Force, U.S. Army, and the U.S. Department of the Interior. Further, the Panel found that actions of a similar nature, scope, and intensity were performed throughout the Federal government without significant environmental impacts.

Paperwork Reduction Act

This notice does not contain collection-of-information requirements subject to the Paperwork Reduction Act (PRA) of 1995 (44 U.S.C. 3501 *et seq.*). Notwithstanding any other provision of law, no person is required to, nor shall a person be subject to a penalty for failure to comply with, a collection of information subject to the requirements of the PRA unless that collection of information displays a currently valid OMB control number.

A Paperwork package for the associated ''Departmental NEPA Checklist'' referenced in the Supplementary Information has been submitted to the Office of Management and Budget (OMB) for review and approval. A Notice of Action will be published in the **Federal Register** at the conclusion of OMB's review of the information collection.

Environmental Impact

This notice supplements CEQ regulations and Department of Commerce NEPA procedures and provides guidance to DOC employees regarding procedural requirements for the application of NEPA provisions to funding decisions including grants and funding applicant actions. CEQ does not direct agencies to prepare a NEPA analysis or document before establishing agency procedures that supplement the CEQ regulations for implementing NEPA. Agency NEPA procedures are procedural guidance to assist agencies in the fulfillment of agency responsibilities under NEPA. The requirements for establishing agency NEPA procedures are set forth at 40 CFR 1505.1 and 1507.3

Dated: July 6, 2009.

Paul N. Doremus,

NOAA NEPA Coordinator, Office of Program Planning and Integration.

[FR Doc. E9–16394 Filed 7–9–09; 8:45 am]

BILLING CODE 3510–12–P

DEPARTMENT OF COMMERCE

International Trade Administration

Application(s) for Duty–Free Entry of Scientific Instruments

Pursuant to Section 6(c) of the Educational, Scientific and Cultural Materials Importation Act of 1966 (Pub. L. 89–651, as amended by Pub. L. 106–36; 80 Stat. 897; 15 CFR part 301), we invite comments on the question of whether instruments of equivalent scientific value, for the purposes for which the instruments shown below are intended to be used, are being manufactured in the United States. Comments must comply with 15 CFR 301.5(a)(3) and (4) of the regulations and be postmarked on or before July 30, 2009. Address written comments to Statutory Import Programs Staff, Room 3720, U.S. Department of Commerce, Washington, D.C. 20230. Applications may be examined between 8:30 a.m. and 5 p.m. at the U.S. Department of Commerce in Room 3720.

Docket Number: 09–032. Applicant: National Renewable Energy Laboratory, 1617 Cole Blvd., Golden, Colorado 80401. Instrument: MicroTime 200 Single Molecule Fluorescence Lifetime Imaging System. Manufacturer: PicoQuant GmbH, Germany. Intended

Use: This instrument will be used in biomass characterization. The instrument will be capable of doing Fluorescence Lifetime Imaging, measuring Fluorescence resonance Energy Transfer and Fluorescence Correlation Spectroscopy for single fluorescent molecules. Justification for Duty–Free Entry: There are no instruments of the same general category being manufactured within the United States. Application accepted by Commissioner of Customs: June 17, 2009.

Docket Number: 09–034. Applicant: University of Georgia, 1151 East Whitehall Rd., Athens, GA 30605. Instrument: Gasification Unit. Manufacturer: Termoquip Energia Alternativa LTDA, Brazil. Intended Use: This instrument will be use to turn biomass into syngas, which is composed of hydrogen and carbon monoxide that can be catalytically upgraded to liquid fuel, chemicals and energy. Justification for Duty–Free Entry: There are no instruments of the same general category being manufactured within the United States. Application accepted by Commissioner of Customs: June 2, 2009.

Dated: July 1, 2009.

Christopher Cassel,

Acting Director, IA Subsidies Enforcement Office.

[FR Doc. E9–16287 Filed 7–9–09; 8:45 am]

BILLING CODE 3510–DS–S

DEPARTMENT OF COMMERCE

International Trade Administration

[A–552–801]

Continuation of Antidumping Duty Order on Certain Frozen Fish Fillets From the Socialist Republic of Vietnam

AGENCY: Import Administration, International Trade Administration, Department of Commerce.

DATES: *Effective Date:* July 10, 2009.

SUMMARY: As a result of the determinations by the Department of Commerce (''Department'') and the International Trade Commission (''ITC'') that revocation of the antidumping duty order on certain frozen fish fillets from the Socialist Republic of Vietnam (''Vietnam'') would likely lead to a continuation or recurrence of dumping and material injury to an industry in the United States, the Department is publishing a notice of continuation of the antidumping duty order.

FOR FURTHER INFORMATION CONTACT: Matthew Renkey, AD/CVD Operations, Import Administration, International Trade Administration, U.S. Department of Commerce, 14th Street & Constitution Avenue, NW., Washington, DC 20230; *telephone:* (202) 482–2312.

SUPPLEMENTARY INFORMATION: On July 1, 2008, the Department published the notice of initiation of the sunset review of the antidumping duty order on certain frozen fish fillets from Vietnam pursuant to section 751(c) of the Tariff Act of 1930, as amended (''Act''). *See Initiation of Five-year (''Sunset'') Review,* 73 FR 37411 (July 1, 2008).

As a result of its review, the Department determined that revocation of the antidumping duty order on certain frozen fish fillets from Vietnam would likely lead to a continuation or recurrence of dumping and, therefore, notified the ITC of the magnitude of the margins likely to prevail should the order be revoked. *See Certain Frozen Fish Fillets from the Socialist Republic of Vietnam: Notice of Final Results of Expedited Sunset Review of Antidumping Duty Order,* 74 FR 5819 (February 2, 2009).

On July 6, 2009, the ITC determined, pursuant to section 751(c) of the Act, that revocation of the antidumping duty order on certain frozen fish fillets from Vietnam would likely lead to a continuation or recurrence of material injury to an industry in the United States within a reasonably foreseeable future. *See Certain Frozen Fish Fillets from Vietnam; Determination,* 74 FR 31975 (July 6, 2009), and USITC Publication 4083 (June 2009).

Scope of the Order

The product covered by this Order is frozen fish fillets, including regular, shank, and strip fillets and portions thereof, whether or not breaded or marinated, of the species *Pangasius Bocourti, Pangasius Hypophthalmus* (also known as *Pangasius Pangasius*), and *Pangasius Micronemus.* Frozen fish fillets are lengthwise cuts of whole fish. The fillet products covered by the scope include boneless fillets with the belly flap intact (''regular'' fillets), boneless fillets with the belly flap removed (''shank'' fillets), boneless shank fillets cut into strips (''fillet strips/finger''), which include fillets cut into strips, chunks, blocks, skewers, or any other shape. Specifically excluded from the scope are frozen whole fish (whether or not dressed), frozen steaks, and frozen belly-flap nuggets. Frozen whole dressed fish are deheaded, skinned, and eviscerated. Steaks are bone-in, cross-section cuts of dressed fish. Nuggets are the belly-flaps. The subject merchandise will be hereinafter referred to as frozen ''basa'' and ''tra'' fillets, which are the Vietnamese common names for these species of fish. These products are classifiable under tariff article codes 1604.19.4000, 1604.19.5000, 0305.59.4000, 0304.29.6033 (Frozen Fish Fillets of the species Pangasius including basa and tra) of the Harmonized Tariff Schedule of the United States (''HTSUS'').[1] This Order covers all frozen fish fillets meeting the above specification, regardless of tariff classification. Although the HTSUS subheading is provided for convenience and customs purposes, our written description of the scope of the Order is dispositive.

Continuation of the Order

As a result of these determinations by the Department and the ITC that revocation of the antidumping duty order would likely lead to a continuation or recurrence of dumping and material injury to an industry in the United States, pursuant to section 751(d)(2) of the Act, the Department hereby orders the continuation of the antidumping order on certain frozen fish fillets from Vietnam. United States Customs and Border Protection will continue to collect antidumping duty cash deposits at the rates in effect at the time of entry for all imports of subject merchandise. The effective date of the continuation of the order will be the date of publication in the **Federal Register** of this notice of continuation. Pursuant to section 751(c)(2) of the Act, the Department intends to initiate the next five-year review of the order not later than 30 days prior to the fifth anniversary of the effective date of continuation.

This five-year (sunset) review and this notice are in accordance with section 751(c) of the Act and published pursuant to section 777(i)(1) of the Act.

Dated: July 7, 2009.

Ronald K. Lorentzen,

Acting Assistant Secretary for Import Administration.

[FR Doc. E9–16498 Filed 7–9–09; 8:45 am]

BILLING CODE 3510–DS–P

[1] Until July 1, 2004, these products were classifiable under tariff article codes 0304.20.60.30 (Frozen Catfish Fillets), 0304.20.60.96 (Frozen Fish Fillets, NESOI), 0304.20.60.43 (Frozen Freshwater Fish Fillets) and 0304.20.60.57 (Frozen Sole Fillets) of the HTSUS. Until February 1, 2007, these products were classifiable under tariff article code 0304.20.60.33 (Frozen Fish Fillets of the species *Pangasius* including basa and tra) of the HTSUS.

DEPARTMENT OF COMMERCE

National Oceanic and Atmospheric Administration

Draft Papahanaumokuakea Marine National Monument Science Plan; Public Meetings

AGENCY: National Oceanic and Atmospheric Administration (NOAA), Department of Commerce (DOC).

ACTION: Notice of availability of the draft monument natural resources science plan; announcement of public meetings; request for comments.

SUMMARY: This notice advises the public that NOAA, FWS, and the State of Hawai'i's Department of Land and Natural Resources (DLNR), and Office of Hawaiian Affairs have prepared a draft monument natural resources science plan (NRSP) for the Papahanaumokuakea Marine National Monument (Monument) located in the Northwestern Hawaiian Islands (NWHI). The State of Hawai'i also participated in the development of the NRSP. The monument's research activities, ongoing and proposed, are described in the Draft NRSP. The NRSP is available for public review and comments. Two public meetings are scheduled to obtain your comments on the Draft NRSP, see **DATES** for details.

DATES: To ensure consideration, written comments should be received on or before August 10th, 2009. Two public meetings will be held where you will have opportunities to ask questions about the NRSP and provide formal comments. The meetings will be held from 6 p.m. to 8:30 p.m. on the following dates and locations:

- July 21th: Papahanaumokuakea Marine National Monument conference room, 6600 Kalanianaole Hwy, Suite 300, Honolulu, HI 96825.
- July 23th: Mokupapapa Discovery Center, 308 Kamehameha Ave, Suite 203, Hilo, HI, 96720.

ADDRESSES: The Draft NRSP is available on the FWS and NOAA Web site *http://hawaiireef.noaa.gov/research/welcome.html*.

You may provide written comments on the Draft NRSP by any of the following methods:

- *U.S. Mail:* Papahanaumokuakea Marine National Monument, Attn: Science Plan Comments, 6600 Kalanianaole Hwy, Suite 300, Honolulu HI, 96825; or
- *Fax:* to (808) 397–2662; or
- *E-mail: nwhicomments@noaa.gov.*
- *Instructions:* All comments received are a part of the public record. All Personal Identifying Information (for example, name, address, *etc.*) voluntarily submitted by the commenter may be publicly accessible. Do not submit confidential business information or otherwise sensitive or protected information. NOAA will accept anonymous comments (enter N/A in the required fields if you wish to remain anonymous). Attachments to electronic comments will be accepted in Microsoft Word, Excel, Wordperfect, or Adobe PDF file formats only.

FOR FURTHER INFORMATION CONTACT: T. 'Aulani Wilhelm, Monument Superintendent (NOAA); 6600 Kalanianaole Highway, 300, Honolulu, HI 96825; (808) 397–2660.

SUPPLEMENTARY INFORMATION:

Monument Background

On June 15, 2006, President George W. Bush established the Northwestern Hawaiian Islands Marine National Monument by issuing Presidential Proclamation 8031 (Proclamation) (71 FR 36443, June 26, 2006) under the authority of the Act of June 8, 1906 (34 Stat. 225, 16 U.S.C. 431) (the Antiquities Act). On December 8, 2006, the Secretaries of Commerce and the Interior and the Governor of Hawai'i signed a Memorandum of Agreement for coordinated, integrated management and protection of the monument. On February 28, 2007, President Bush amended the Proclamation to rename the monument, Papahanaumokuakea Marine National Monument, to reflect native Hawaiian language and culture (72 FR 10031, March 6, 2007).

Location, Size, and Federal and State Resource Management

Proclamation 8031 reserves all lands and interests in lands owned or controlled by the Government of the United States in the Northwestern Hawaiian Islands (NWHI), including emergent and submerged lands and waters out to a distance of approximately 50 nautical miles from the islands. The monument is approximately 100 nautical miles wide and extends approximately 1,200 miles around coral islands, seamounts, banks, and shoals. The area includes the: Northwestern Hawaiian Islands Coral Reef Ecosystem Reserve, Midway Atoll National Wildlife Refuge/Battle of Midway National Memorial, Hawaiian Islands National Wildlife Refuge, Hawaii State Seabird Sanctuary at Kure Atoll, and State of Hawai'i's Northwestern Hawaiian Islands Marine Refuge. NOAA maintains responsibility for managing the NWHI Coral Reef Ecosystem Reserve, included within the monument, and has primary responsibility regarding the management of the marine areas of the monument, in consultation with FWS.

Refuge areas within the monument, including the Midway Atoll National Wildlife Refuge, the Battle of Midway National Memorial, and the Hawaiian Islands National Wildlife Refuge, are managed by FWS. The State maintains responsibility for managing state lands and waters within the monument, including the NWHI State Marine Refuge and State Seabird Sanctuary at Kure Atoll.

Public Outreach and the NRSP's Relationship to Previous Plans

The Co-Trustees created the Draft NRSP as one of several eventual ''step-down'' plans from the Monument Management Plan. The NRSP was written in consultation with all members of the Monument Management Board. Comments and issues raised during scoping are included in the Draft NRSP.

Condition Report

In preparation for science plan review, NOAA has produced a Papahanaumokuakea Marine National Monument Condition Report. The Condition Report provides a summary of resources in PMNM, pressures on those resources, the current condition and trends, and management responses to the pressures that threaten the integrity of the marine environment. Specifically, the Condition Report includes information on the status and trends of water quality, habitat, living resources and maritime archaeological resources and the human activities that affect them. The report serves as a supporting document for the Natural Resources Science Plan Review Process, to inform constituents who desire to participate in that process. It can be found online at *http://sanctuaries.noaa.gov/science/condition/pmnm/download.html.*

Public Availability of Comments

Before including your address, phone number, e-mail address, or other personal identifying information in your comment, you should be aware that your entire comment—including your personal identifying information—may be made publicly available at any time. While you can ask us in your comment to withhold your personal identifying information from public review, it cannot be guaranteed that we will be able to do so. For more information, please see the **ADDRESSES** section.

Dated: July 1, 2009.

Daniel J. Basta,

Director, Office of National Marine Sanctuaries.

[FR Doc. E9–16093 Filed 7–9–09; 8:45 am]

BILLING CODE 3510–NK–P

DEPARTMENT OF COMMERCE

Foreign-Trade Zones Board

[Order No. 1632]

Grant of Authority for Subzone Status, Cornell Dubilier Marketing, Inc. (Electrolytic Capacitors), Liberty, SC

Pursuant to its authority under the Foreign–Trade Zones Act of June 18, 1934, as amended (19 U.S.C. 81a–81u), the Foreign–Trade Zones Board (the Board) adopts the following Order:

Whereas, the Foreign–Trade Zones Act provides for ''. . . the establishment * * * of foreign–trade zones in ports of entry of the United States, to expedite and encourage foreign commerce, and for other purposes,'' and authorizes the Foreign–Trade Zones Board to grant to qualified corporations the privilege of establishing foreign–trade zones in or adjacent to U.S. Customs and Border Protection ports of entry;

Whereas, the Board's regulations (15 CFR Part 400) provide for the establishment of special–purpose subzones when existing zone facilities cannot serve the specific use involved, and when the activity results in a significant public benefit and is in the public interest;

Whereas, the South Carolina State Ports Authority, grantee of Foreign–Trade Zone 38, has made application for authority to establish special–purpose subzone status at the aluminum electrolytic capacitor manufacturing plant of Cornell Dubilier Marketing, Inc. (Docket 46–2008, filed 8–18–2008);

Whereas, notice inviting public comment was given in the **Federal Register** (73 FR 49990, 8–25–2008); and,

Whereas, the Board adopts the findings and recommendations of the examiner's report, and finds that the requirements of the FTZ Act and the Board's regulations are satisfied, and that approval of the application is in the public interest;

Now, therefore, the Board hereby grants authority for subzone status for activity related to the manufacturing of aluminum electrolytic capacitors at the Cornell Dubilier Marketing, Inc., facility located in Liberty, South Carolina (Subzone 38I), as described in the application and **Federal Register** notice, and subject to the FTZ Act and the Board's regulations, including Section 400.28.

Signed at Washington, DC, this 26th day of June 2009.

Ronald K. Lorentzen,

Acting Assistant Secretary of Commerce for Import Administration, Alternate Chairman, Foreign–Trade Zones Board.

Attest:

Andrew McGilvray,

Executive Secretary.

[FR Doc. E9–16389 Filed 7–9–09; 8:45 am]

BILLING CODE: 3510–DS–S

DEPARTMENT OF COMMERCE

National Institute of Standards and Technology

Notice of Invention Available for Licensing

AGENCY: National Institute of Standards and Technology, Commerce.

ACTION: Notice of invention available for licensing.

SUMMARY: The invention listed below is owned in part by the U.S. Government, as represented by the Department of Commerce, and George Mason University. The U.S. Government's ownership in the invention is available for licensing in accordance with 35 U.S.C. 207 and 37 CFR part 404 to achieve expeditious commercialization of results of federally funded research and development.

FOR FURTHER INFORMATION CONTACT: Technical and licensing information on this invention may be obtained by writing to: National Institute of Standards and Technology, Office of Technology Partnerships, *Attn:* Mary Clague, Building 222, Room A240, Gaithersburg, MD 20899. Information is also available via telephone: 301–975–4188, fax 301–975–3482, or *e-mail: mary.clague@nist.gov*. Any request for information should include the NIST Docket number and title for the invention as indicated below.

SUPPLEMENTARY INFORMATION: NIST may enter into a Cooperative Research and Development Agreement (''CRADA'') with the licensee to perform further research on the invention for purposes of commercialization. The invention available for licensing is:

[NIST DOCKET NUMBER: 07–001].

Title: Interactive Analysis of Attack Graphs Using Relational Queries.

Abstract: Attack graph is important in defending against well-orchestrated network intrusions. However, the current analysis of attack graphs requires an algorithm to be developed and implemented, causing a delay in the availability of analysis. Such a delay is usually unacceptable because the needs for analyzing attack graphs may change rapidly in defending against network intrusions. An administrator may want to revise an analysis upon observing its outcome. Such an analysis, similar to that in decision support systems, is difficult if at all possible with current approaches based on proprietary algorithms. This invention removes the above limitation and enables interactive analysis of attack graphs. A relational model is devised for representing necessary inputs including network configuration and domain knowledge. The attack graph from those inputs as relational views is generated. Typical analyses of the attack graph can be realized as relational queries against the views are shown. This approach eliminates the needs for developing a proprietary algorithm for each different analysis, because an analysis is now simply a relational query. The interactive analysis of attack graphs is now possible, because relational queries can be dynamically constructed and revised at run time. Moreover, the mature optimization techniques in relational databases can also improve the performance of the analysis.

Dated: July 6, 2009.

Patrick Gallagher,

Deputy Director.

[FR Doc. E9–16370 Filed 7–9–09; 8:45 am]

BILLING CODE 3510–13– P

DEPARTMENT OF COMMERCE

National Oceanic and Atmospheric Administration

RIN 0648–XF97

Marine Mammals; File No. 10137

AGENCY: National Marine Fisheries Service (NMFS), National Oceanic and Atmospheric Administration (NOAA), Commerce.

ACTION: Notice; issuance of permit and proposed amendment.

SUMMARY: Notice is hereby given that the NMFS Pacific Islands Fisheries Science Center, Marine Mammal Research Program (MMRP), 2570 Dole Street, Honolulu, HI 96822–2396 (Responsible Party: Frank Parrish, Ph.D.), has been issued a permit to conduct research and enhancement activities on Hawaiian monk seals (*Monachus schauinslandi*).

ADDRESSES: The permit and related documents are available for review upon written request or by appointment in the following offices:

Permits, Conservation and Education Division, Office of Protected Resources, NMFS, 1315 East-West Highway, Room 13705, Silver Spring, MD 20910; phone (301)713–2289; fax (301)713–0376; and

Pacific Islands Region, NMFS, 1601 Kapiolani Blvd., Rm 1110, Honolulu, HI 96814–4700; phone (808)944–2200; fax (808)973–2941.

FOR FURTHER INFORMATION CONTACT: Amy Sloan or Kate Swails, (301)713–2289.

SUPPLEMENTARY INFORMATION: On March 6, 2008, notice was published in the **Federal Register** (73 FR 12137) that a request for a permit to take the species identified above had been submitted by the MMRP. The requested permit has been issued under the authority of the Marine Mammal Protection Act of 1972, as amended (16 U.S.C. 1361 *et seq.*), the regulations governing the taking and importing of marine mammals (50 CFR part 216), the Endangered Species Act of 1973, as amended (ESA; 16 U.S.C. 1531 *et seq.*), and the regulations governing the taking, importing, and exporting of endangered and threatened species (50 CFR parts 222–226).

Permit No. 10137 authorizes the MMRP to: (1) assess survivorship, reproductive rates, pup production, condition, abundance, movements among subpopulations, and incidence and causes of injury or mortality; (2) diagnose disease, monitor exposure to disease, and develop normal baseline hematology and biochemistry parameters; (3) conduct activities to increase survival of individuals; and (4) investigate foraging ecology to determine foraging locations, diving parameters, characteristics of foraging substrate, and prey identification and foraging behaviors. The permit has been issued for a 5–year period.

One project proposed by the applicant, translocation of immature seals between islands/atolls within the Northwestern Hawaiian Islands, was not authorized because the NMFS Endangered Species Division requested additional time to complete the consultation under section 7 of the ESA for this portion of the permit. NMFS proposes to amend Permit No. 10137 to include this enhancement activity upon completion of the ESA section 7 consultation.

In compliance with the National Environmental Policy Act of 1969 (42 U.S.C. 4321 *et seq.*), an environmental assessment was prepared analyzing the effects of the permitted activities. After a Finding of No Significant Impact, the determination was made that it was not necessary to prepare an environmental impact statement.

Issuance of this permit, as required by the ESA, was based on a finding that such permit: (1) was applied for in good faith; (2) will not operate to the disadvantage of such endangered species; and (3) is consistent with the purposes and policies set forth in section 2 of the ESA.

Dated: July 6, 2009.

P. Michael Payne,

Chief, Permits, Conservation and Education Division, Office of Protected Resources, National Marine Fisheries Service.

[FR Doc. E9–16391 Filed 7–9–09; 8:45 am]

BILLING CODE 3510–22–S

COMMITTEE FOR PURCHASE FROM PEOPLE WHO ARE BLIND OR SEVERELY DISABLED

Procurement List Proposed Additions and Deletions

AGENCY: Committee for Purchase From People Who Are Blind or Severely Disabled.

ACTION: Proposed additions to and deletions from procurement list.

SUMMARY: The Committee is proposing to add to the Procurement List services to be furnished by nonprofit agencies employing persons who are blind or have other severe disabilities, and to delete products and a service previously furnished by such agencies.

DATES: *Comments Must Be Received on or Before:* 8/10/2009.

ADDRESSES: Committee for Purchase From People Who Are Blind or Severely Disabled, Jefferson Plaza 2, Suite 10800, 1421 Jefferson Davis Highway, Arlington, Virginia 22202–3259.

FOR FURTHER INFORMATION OR TO SUBMIT COMMENTS CONTACT: Barry S. Lineback, Telephone: (703) 603–7740, Fax: (703) 603–0655, or e-mail *CMTEFedReg@AbilityOne.gov*.

SUPPLEMENTARY INFORMATION: This notice is published pursuant to 41 U.S.C. 47(a)(2) and 41 CFR 51–2.3. Its purpose is to provide interested persons an opportunity to submit comments on the proposed actions.

Additions

If the Committee approves the proposed additions, the entities of the Federal Government identified in this notice for each service will be required to procure the services listed below from nonprofit agencies employing persons who are blind or have other severe disabilities.

Regulatory Flexibility Act Certification

I certify that the following action will not have a significant impact on a substantial number of small entities. The major factors considered for this certification were:

1. If approved, the action will not result in any additional reporting, recordkeeping or other compliance requirements for small entities other than the small organizations that will furnish the services to the Government.

2. If approved, the action will result in authorizing small entities to furnish the services to the Government.

3. There are no known regulatory alternatives which would accomplish the objectives of the Javits-Wagner-O'Day Act (41 U.S.C. 46–48c) in connection with the services proposed for addition to the Procurement List.

Comments on this certification are invited. Commenters should identify the statement(s) underlying the certification on which they are providing additional information.

End of Certification

The following services are proposed for addition to Procurement List for production by the nonprofit agencies listed:

Services

Service Type/Location:
Janitorial Services: Pacific Heights Entrance Point, Facility Number 1300, San Pedro, CA.
Pacific Crest Entrance Point, Facility Number 1200, San Pedro, CA.
Fort MacArthur, 2400 South Pacific Ave, San Pedro, CA.
Service Type/Location:
Base Wide Janitorial Service: Los Angeles Air Force Base, 2420 Vela Way, El Segundo, CA.
Service Type/Location:
Hospital Housekeeping Service: 61st Medical Squadron Medical Clinic, Building 30, San Pedro, CA.
NPA: Goodwill Industries of Southern California, Los Angeles, CA.
Contracting Activity: Dept of the Air Force, FA2816 61 CONS LGC, El Segundo, CA.
Service Type/Location:
Mess Attendant Services: Patterson Dining Facility, Building 403, Dover AFB, DE.
NPA: Opportunity Center, Incorporated, Wilmington, DE.
Contracting Activity: Dept of the Air Force, FA4497 436 CONS LGC, Dover AFB, DE.
Service Type/Location:
Custodial Services: Base Wide, Robins AFB, GA.
NPA: Good Vocations, Inc., Macon, GA.
Contracting Activity: Dept of the Air Force, FA8501 WR ALC PKO, Robins AFB, GA.

Deletions

Regulatory Flexibility Act Certification

I certify that the following action will not have a significant impact on a

substantial number of small entities. The major factors considered for this certification were:

1. If approved, the action will not result in additional reporting, recordkeeping or other compliance requirements for small entities.

2. If approved, the action may result in authorizing small entities to furnish the products and service to the Government.

3. There are no known regulatory alternatives which would accomplish the objectives of the Javits-Wagner-O'Day Act (41 U.S.C. 46–48c) in connection with the products and service proposed for deletion from the Procurement List.

End of Certification

The following products and service are proposed for deletion from the Procurement List:

Products

Illuminator/Corrector Stx and Refills

NSN: 7510–01–390–0709—Illuminator/Corrector Stx and Refills;
NSN: 7520–01–386–2407—Illuminator/Corrector Stx and Refills;
NSN: 7520–01–386–2441—Illuminator/Corrector Stx and Refills.
NPA: San Antonio Lighthouse for the Blind, San Antonio, TX.
Contracting Activity: GSA/FSS OFC SUP CTR—Paper Products, New York, NY.

Service

Service Type/Location:
Janitorial/Custodial: OSHA Training Center, 1555 Time Drive, Des Plaines, IL.
NPA: Lester and Rosalie Anixter Center, Chicago, IL.
Contracting Activity: Department of Labor, Washington, DC.

Barry S. Lineback,

Director, Business Operations.

[FR Doc. E9–16311 Filed 7–9–09; 8:45 am]

BILLING CODE 6353–01–P

COMMITTEE FOR PURCHASE FROM PEOPLE WHO ARE BLIND OR SEVERELY DISABLED

Procurement List Additions and Deletions

AGENCY: Committee for Purchase From People Who Are Blind or Severely Disabled.

ACTION: Additions to and deletions from procurement list.

SUMMARY: This action adds to the Procurement List products and services to be furnished by nonprofit agencies employing persons who are blind or have other severe disabilities, and deletes from the Procurement List products previously furnished by such agencies.

DATES: *Effective Date:* 8/10/2009.

ADDRESSES: Committee for Purchase From People Who Are Blind or Severely Disabled, Jefferson Plaza 2, Suite 10800, 1421 Jefferson Davis Highway, Arlington, Virginia 22202–3259.

FOR FURTHER INFORMATION CONTACT: Barry S. Lineback, Telephone: (703) 603–7740, Fax: (703) 603–0655, or e-mail *CMTEFedReg@AbilityOne.gov.*

SUPPLEMENTARY INFORMATION:

Additions

On 4/10/2009, 5/8/2009 and 5/15/2009, the Committee for Purchase From People Who Are Blind or Severely Disabled published notices (74 FR 16367–8; 74 FR 21661–2; 74 FR 22891–2 respectively) of proposed additions to the Procurement List.

After consideration of the material presented to it concerning capability of qualified nonprofit agencies to provide the products and services and impact of the additions on the current or most recent contractors, the Committee has determined that the products and services listed below are suitable for procurement by the Federal Government under 41 U.S.C. 46–48c and 41 CFR 51–2.4.

Regulatory Flexibility Act Certification

I certify that the following action will not have a significant impact on a substantial number of small entities. The major factors considered for this certification were:

1. The action will not result in any additional reporting, recordkeeping or other compliance requirements for small entities other than the small organizations that will furnish the products and services to the Government.

2. The action will result in authorizing small entities to furnish the products and services to the Government.

3. There are no known regulatory alternatives which would accomplish the objectives of the Javits-Wagner-O'Day Act (41 U.S.C. 46–48c) in connection with the products and services proposed for addition to the Procurement List.

End of Certification

Accordingly, the following products and services are added to the Procurement List:

Products

NSN: 7105–00–NIB–0013—Table, Folding Legs 30Wx72Lx29H.
NSN: 7105–00–NIB–0015—Chair, Folding, Platinum.
NSN: 7105–00–NIB–0016—Table, Folding Legs 30Wx96Lx29H.
NSN: 7105–00–NIB–0017—Table, Folding Legs 24Wx48Lx29H.
NPA: MidWest Enterprises for the Blind, Inc., Kalamazoo, MI.
Contracting Activity: Federal Acquisition Service, GSA/FSS Household and Industrial Furniture, Arlington, VA.
Coverage: B-list for the broad Government requirement as specified by the General Services Administration.
NSN: 1670–01–529–1202—LCADS High Velocity Parachute.
NPA: Winston-Salem Industries for the Blind, Winston-Salem, NC.
Contracting Activity: DEPT OF THE ARMY, XR W6BA ACA NATICK, NATICK, MA.
Coverage: C–List for 33% of total allocation over 5 years for the Department of the Army, Natick, MA.
NSN: 7510–00–NIB–0858—Tape, Duct.
NSN: 7510–00–NIB–0859—Tape, Duct.
NSN: 7510–00–NIB–0860—Tape, Painters.
NSN: 7510–00–NIB–0910—Tape, Painters.
NSN: 7510–00–NIB–0911—Tape, Painters.
NPA: Cincinnati Association for the Blind, Cincinnati, OH.
Contracting Activity: Federal Acquisition Service, GSA/FSS OFC SUP CTR—Paper Products, New York, NY.
Coverage: A-list for the total Government requirement as aggregated by the General Services Administration.
NSN: 5120–00–878–5932.
NPA: The Lighthouse for the Blind, Inc. (Seattle Lighthouse), Seattle, WA.
Contracting Activity: Federal Acquisition Service, GSA/FSS Tools Acquisition Division I, Kansas City, MO.
Coverage: B-list for the broad Government requirement as aggregated by the General Services Administration.
NSN: MR 489—Soy Candle, 9.4 oz Vanilla.
NSN: MR 490—Soy Candle, 9.4 oz Berry Blaster.
NSN: MR 491—Soy Candle, 9.4 oz Ocean.
NSN: MR 492—Soy Candle, 9.4 oz Lily.
NSN: MR 493—Soy Candle, 3.7 oz Vanilla.
NSN: MR 494—Soy Candle, 3.7 oz Berry Blaster.
NSN: MR 495—Soy Candle, 3.7 oz Ocean.
NSN: MR 496—Soy Candle, 3.7 oz Lily.
NPA: Industries for the Blind, Inc., West Allis, WI.
Contracting Activity: Military Resale-Defense Commissary Agency, Fort Lee, VA.

Services

Service Type/Location: Custodial Services, J. Caleb Boggs Courthouse & Federal Building, 844 N. King Street, Wilmington, DE.
J. Allen Frear Federal Building, 300 South New Street, Dover, DE.
Bridgeton SSA Office, 149 West Broad Street, Bridgeton, NJ.
NPA: Opportunity Center, Incorporated, Wilmington, DE.
Contracting Activity: Public Buildings Service, GSA/PBS/R03 Philatlantic, Philadelphia, PA.
Service Type/Location: Relamping of Lighting Fixtures, Naval Hospital Bremerton, 1 Boone Road, Bremerton, WA.

NPA: Skookum Educational Programs, Bremerton, WA.
Contracting Activity: Dept of the Navy, Engineering Field Activity, Poulsbo, WA.
Service Type/Location: Custodial Service, Camp Bullis Buildings 6282 and 6287, 6929 Camp Bullis Rd., Camp Bullis, TX.
NPA: Professional Contract Services, Inc., Austin, TX.
Contracting Activity: Dept of the Army, XR W6BB ACA Sam Houston, Fort Sam Houston, TX.
Service Type/Location: Custodial Services, VA Midsouth CMOP, 5171 Sam Jared Drive, Murfreesboro, TN.
NPA: Bobby Dodd Institute, Inc., Atlanta, GA.
Contracting Activity: Veterans Affairs, Department of, CMOP National Contracting, Leavenworth, KS.
Service Type/Location: Grounds Maintenance Services, U.S. Forest Service Northern CA Service Center, 6101 Airport Road, Redding, CA.
NPA: Shasta County Opportunity Center, Redding, CA.
Contracting Activity: Forest Service, North Zone Fire Cache, Redding, CA.

Deletions

On 5/1/2009, the Committee for Purchase From People Who Are Blind or Severely Disabled published notice (74 FR 83, pages 20290–1) of proposed deletions from the Procurement List.

After consideration of the relevant matter presented, the Committee has determined that the products listed below are no longer suitable for procurement by the Federal Government under 41 U.S.C. 46–48c and 41 CFR 51–2.4.

Regulatory Flexibility Act Certification

I certify that the following action will not have a significant impact on a substantial number of small entities. The major factors considered for this certification were:

1. The action will not result in additional reporting, recordkeeping or other compliance requirements for small entities.

2. The action may result in authorizing small entities to furnish the products to the Government.

3. There are no known regulatory alternatives which would accomplish the objectives of the Javits-Wagner-O'Day Act (41 U.S.C. 46–48c) in connection with the products deleted from the Procurement List.

End of Certification

Accordingly, the following products are deleted from the Procurement List:

Products

NSN: 8410–00–NSH–0025—Protective Worksuit, General Purpose.
NSN: 8410–00–NSH–0026—Protective Worksuit, General Purpose.
NSN: 8410–00–NSH–0027—Protective Worksuit, General Purpose.
NSN: 8410–00–NSH–0028—Protective Worksuit, General Purpose.
NSN: 8410–00–NSH–0029—Protective Worksuit, General Purpose.
NSN: 8410–00–NSH–0030—Protective Worksuit, General Purpose.
NSN: 8410–00–NSH–0031—Protective Worksuit, General Purpose.
NSN: 8410–00–NSH–0032—Protective Worksuit, General Purpose.
NSN: 8410–00–NSH–0125—Protective Worksuit, General Purpose.
NSN: 8410–00–NSH–0126—Protective Worksuit, General Purpose.
NSN: 8410–00–NSH–0127—Protective Worksuit, General Purpose.
NSN: 8410–00–NSH–0128—Protective Worksuit, General Purpose.
NSN: 8410–00–NSH–0129—Protective Worksuit, General Purpose.
NSN: 8410–00–NSH–0130—Protective Worksuit, General Purpose.
NSN: 8410–00–NSH–0131—Protective Worksuit, General Purpose.
NSN: 8410–00–NSH–0132—Protective Worksuit, General Purpose.
NSN: 8410–00–NSH–0225—Protective Worksuit, General Purpose.
NSN: 8410–00–NSH–0226—Protective Worksuit, General Purpose.
NSN: 8410–00–NSH–0227—Protective Worksuit, General Purpose.
NSN: 8410–00–NSH–0228—Protective Worksuit, General Purpose.
NSN: 8410–00–NSH–0229—Protective Worksuit, General Purpose.
NSN: 8410–00–NSH–0230—Protective Worksuit, General Purpose.
NSN: 8410–00–NSH–0231—Protective Worksuit, General Purpose.
NSN: 8410–00–NSH–0232—Protective Worksuit, General Purpose.
NSN: 8410–00–NSH–0325—Protective Worksuit, General Purpose.
NSN: 8410–00–NSH–0326—Protective Worksuit, General Purpose.
NSN: 8410–00–NSH–0327—Protective Worksuit, General Purpose.
NSN: 8410–00–NSH–0328—Protective Worksuit, General Purpose.
NSN: 8410–00–NSH–0329—Protective Worksuit, General Purpose.
NSN: 8410–00–NSH–0330—Protective Worksuit, General Purpose.
NSN: 8410–00–NSH–0331—Protective Worksuit, General Purpose.
NSN: 8410–00–NSH–0332—Protective Worksuit, General Purpose.
NSN: 8410–00–NSH–0425—Protective Worksuit, General Purpose.
NSN: 8410–00–NSH–0426—Protective Worksuit, General Purpose.
NSN: 8410–00–NSH–0427—Protective Worksuit, General Purpose.
NSN: 8410–00–NSH–0428—Protective Worksuit, General Purpose.
NSN: 8410–00–NSH–0429—Protective Worksuit, General Purpose.
NSN: 8410–00–NSH–0430—Protective Worksuit, General Purpose.
NSN: 8410–00–NSH–0431—Protective Worksuit, General Purpose.
NSN: 8410–00–NSH–0432—Protective Worksuit, General Purpose.
NSN: 8410–00–NSH–0532—Protective Worksuit, General Purpose.
NSN: 8410–00–NSH–0632—Protective Worksuit, General Purpose.
NSN: 8410–00–NSH–0732—Protective Worksuit, General Purpose.
NSN: 8410–00–NSH–0832—Protective Worksuit, General Purpose.
NSN: 8410–00–NSH–0932—Protective Worksuit, General Purpose.
NSN: 8410–00–NSH–1032—Protective Worksuit, General Purpose.
NSN: 8410–00–NSH–1132—Protective Worksuit, General Purpose.
NSN: 8410–00–NSH–1232—Protective Worksuit, General Purpose.
NSN: 8410–00–NSH–1332—Protective Worksuit, General Purpose.
NSN: 8410–00–NSH–1432—Protective Worksuit, General Purpose.
NSN: 8410–00–NSH–1532—Protective Worksuit, General Purpose.
NSN: 8410–00–NSH–1632—Protective Worksuit, General Purpose.
NSN: 8410–00–NSH–1732—Protective Worksuit, General Purpose.
NSN: 8410–00–NSH–1832—Protective Worksuit, General Purpose.
NSN: 8410–00–NSH–1932—Protective Worksuit, General Purpose.
NSN: 8410–00–NSH–2032—Protective Worksuit, General Purpose.
NSN: 8410–00–NSH–2132—Protective Worksuit, General Purpose.
NSN: 8410–00–NSH–2232—Protective Worksuit, General Purpose.
NSN: 8410–00–NSH–2332—Protective Worksuit, General Purpose.
NSN: 8410–00–NSH–2432—Protective Worksuit, General Purpose.
NSN: 8410–00–NSH–2532—Protective Worksuit, General Purpose.
NSN: 8410–00–NSH–2632—Protective Worksuit, General Purpose,
NSN: 8410–00–NSH–2732—Protective Worksuit, General Purpose,
NSN: 8410–00–NSH–2832—Protective Worksuit, General Purpose,
NSN: 8410–00–NSH–2932—Protective Worksuit, General Purpose,
NSN: 8410–00–NSH–3032—Protective Worksuit, General Purpose,
NSN: 8410–00–NSH–3132—Protective Worksuit, General Purpose,
NSN: 8410–00–NSH–3232—Protective Worksuit, General Purpose,
NSN: 8410–00–NSH–3332—Protective Worksuit, General Purpose,
NSN: 8410–00–NSH–3432—Protective Worksuit, General Purpose,
NSN: 8410–00–NSH–3532—Protective Worksuit, General Purpose,
NSN: 8410–00–NSH–3632—Protective Worksuit, General Purpose,
NSN: 8410–00–NSH–3732—Protective Worksuit, General Purpose,
NSN: 8410–00–NSH–3832—Protective Worksuit, General Purpose,
NSN: 8410–00–NSH–3932—Protective Worksuit, General Purpose,
NSN: 8410–00–NSH–4032—Protective Worksuit, General Purpose,
NSN: 8410–00–NSH–4132—Protective Worksuit, General Purpose,
NSN: 8410–00–NSH–4232—Protective Worksuit, General Purpose,

NSN: 8410–00–NSH–4332—Protective Worksuit, General Purpose,
NSN: 8410–00–NSH–4432—Protective Worksuit, General Purpose,
NSN: 8410–00–NSH–4532—Protective Worksuit, General Purpose,
NSN: 8410–00–NSH–4632—Protective Worksuit, General Purpose,
NSN: 8410–00–NSH–4732—Protective Worksuit, General Purpose,
NSN: 8410–00–NSH–4832—Protective Worksuit, General Purpose,
NSN: 8410–00–NSH–4932—Protective Worksuit, General Purpose,
NSN: 8410–00–NSH–5032—Protective Worksuit, General Purpose,
NSN: 8410–00–NSH–5132—Protective Worksuit, General Purpose,
NSN: 8410–00–NSH–5232—Protective Worksuit, General Purpose,
NSN: 8410–00–NSH–5332—Protective Worksuit, General Purpose,
NSN: 8410–00–NSH–5432—Protective Worksuit, General Purpose,
NSN: 8410–00–NSH–5532—Protective Worksuit, General Purpose,
NSN: 8410–00–NSH–5632—Protective Worksuit, General Purpose,
NSN: 8410–00–NSH–5732—Protective Worksuit, General Purpose,
NSN: 8410–00–NSH–5832—Protective Worksuit, General Purpose,
NSN: 8410–00–NSH–5932—Protective Worksuit, General Purpose.
NPA: Association for Retarded Citizens of Baldwin County, Inc., Loxley, AL.
Contracting Activity: GSA/FAS Southwest Supply Center (QSDAC), Fort Worth, TX.

Barry S. Lineback,

Director, Business Operations.

[FR Doc. E9–16312 Filed 7–9–09; 8:45 am]

BILLING CODE 6353–01–P

DEPARTMENT OF DEFENSE

Office of the Secretary

Defense Task Force on Sexual Assault in the Military Services

AGENCY: DoD; Office of the Under Secretary of Defense (Personnel and Readiness).

ACTION: Notice of meeting.

SUMMARY: Under the provisions of the Federal Advisory Committee Act of 1972 (5 U.S.C., Appendix, as amended), the Government in the Sunshine Act of 1976 (5 U.S.C. 552b, as amended), and 41 CFR 102–3.150, the Department of Defense announces that the following Federal advisory committee meetings of the Defense Task Force on Sexual Assault in the Military Services will take place.

Due to scheduling difficulties the Defense Task Force on Sexual Assault in the Military Services was unable to finalize its agenda in time to publish notice of its meeting in the **Federal Register** for the 15-calendar days required by 41 CFR 102–3.150(a). Accordingly, the committee management officer for the Department of Defense, pursuant to 41 CFR 102–3.150(b), waives the 15-calendar day notification requirement.

DATES: Monday, July 13, 2009 and Tuesday, July 14, 2009 (8 a.m. to 4:30 p.m. Eastern Daylight Time (hereafter referred to as EDT)).

ADDRESSES: King Conference Room, Embassy Suites Hotel, 1900 Diagonal Road, Alexandria, Virginia 22314.

FOR FURTHER INFORMATION CONTACT: Michael Molnar, Deputy to the Executive Director; 2850 Eisenhower Avenue, Suite 100, Alexandria, Virginia 22314; phone (888) 325–6640; fax (703) 325–6710; *michael.molnar@wso.whs.mil*.

SUPPLEMENTARY INFORMATION:

Purpose of Meeting: Purpose of the meeting is to obtain and discuss information on the Task Force's congressionally mandated task to examine matters related to sexual assault in the Military Services through briefings from, and discussion with, Task Force staff, subject-matter experts, document review, and preparation of the Task Force report.

Agenda:

Monday, July 13, 2009

8 a.m.–8:05 a.m. Welcome, Administrative Remarks
8:05 a.m.–8:10 a.m. Opening Remarks
8:10 a.m.–9:30 a.m. Subcommittee Work
9:30 a.m.–9:45 a.m. Break
9:45 a.m.–12 p.m. Subcommittee Work
12 p.m.–1 p.m. Noon Meal
1 p.m.–2:30 p.m. Subcommittee Work
2:30 p.m.–2:45 p.m. Break
2:45 p.m.–4:25 p.m. Subcommittee Work
4:25 p.m.–4:30 p.m. Wrap Up

Tuesday, July 14, 2009

8 a.m.–8:05 a.m. Welcome, Administrative Remarks
8:05 a.m.–8:10 a.m. Opening Remarks
8:10 a.m.–9:30 a.m. Subcommittee Work
9:30 a.m.–9:45 a.m. Break
9:45 a.m.–12 p.m. Subcommittee Work
12 p.m.–1 p.m. Noon Meal
1 p.m.–2:30 p.m. Subcommittee Work
2:30 p.m.–2:45 p.m. Break
2:45 p.m.–4:25 p.m. Subcommittee Work
4:25 p.m.–4:30 p.m. Wrap Up

The public can view meeting updates at *http://www.dtic.mil/dtfsams.*

Public's Accessibility to the Meeting: Pursuant to 5 U.S.C. 552b and 41 CFR 102–3.140 through 102–3.165, and the availability of space, this meeting is open to the public. Seating is on a first-come basis.

Committee's Designated Federal Officer: Colonel Cora M. Jackson-Chandler; 2850 Eisenhower Avenue, Suite 100, Alexandria, Virginia 22314; phone (888) 325–6640; fax (703) 325–6710; *cora.chandler@wso.whs.mil*.

Written Statements: Pursuant to 41 CFR 102–3.105(j) and 102–3.140, and section 10(a)(3) of the Federal Advisory Committee Act of 1972, the public or interested organizations may submit written statements to the Defense Task Force on Sexual Assault in the Military Services about its mission and functions. Written statements may be submitted at any time or in response to the stated agenda of a planned meeting of the Defense Task Force on Sexual Assault in the Military Services.

All written statements shall be submitted to the Designated Federal Officer for the Defense Task Force on Sexual Assault in the Military Services, and this individual will ensure that the written statements are provided to the membership for their consideration. Contact information for the Designated Federal Officer is provided in this notice or can be obtained from the GSA's FACA Database: *https://www.fido.gov/facadatabase/public.asp*.

Written statements being submitted in response to the agenda mentioned in this notice must be received by the Designated Federal Officer at the listed address above no later than 7 a.m., EDT, Monday, July 13, 2009 . Written statements received after this date may not be provided to, or considered by, the Defense Task Force on Sexual Assault in the Military Services until its next meeting.

The Designated Federal Officer will review all timely submissions with the Defense Task Force on Sexual Assault in the Military Services Co-Chairs and ensure they are provided to all members of the Defense Task Force on Sexual Assault in the Military Services before the meeting that is the subject of this notice.

Dated: July 7, 2009.

Morgan E. Frazier,

Alternate OSD Federal Register Liaison Officer, Department of Defense.

[FR Doc. E9–16321 Filed 7–9–09; 8:45 am]

BILLING CODE 5001–06–P

DEPARTMENT OF DEFENSE

Office of the Secretary

Board of Regents of the Uniformed Services University of the Health Sciences

AGENCY: Department of Defense; Uniformed Services University of the Health Sciences (USU).

ACTION: Notice of quarterly meeting.

SUMMARY: Under the provisions of the Federal Advisory Committee Act of 1972 (5 U.S.C., Appendix, as amended) and the Sunshine in the Government Act of 1976 (5 U.S.C. 552b, as amended), this notice announces the following meeting of the Board of Regents of the Uniformed Services University of the Health Sciences.

DATES: Tuesday, August 11, 2009, 7:30 a.m. to 12:30 p.m. (Open Session), 12:30 p.m. to 2:30 p.m. (Closed Session).

ADDRESSES: Everett Alvarez Jr. Board of Regents Room (D3001), Uniformed Services University of the Health Sciences, 4301 Jones Bridge Road, Bethesda, Maryland 20814.

FOR FURTHER INFORMATION CONTACT: Janet S. Taylor, Designated Federal Official, 4301 Jones Bridge Road, Bethesda, Maryland 20814; telephone 301–295–3066. Ms. Taylor can also provide base access procedures.

SUPPLEMENTARY INFORMATION:

Purpose of the Meeting: Meetings of the Board of Regents assure that USU operates in the best traditions of academia. An outside Board is necessary for institutional accreditation.

Agenda: The actions that will take place include the approval of minutes from the Board of Regents Meeting held May 15, 2009; acceptance of reports from working committees; approval of faculty appointments and promotions; and the awarding of master's and doctoral degrees in the biomedical sciences and public health. The President, USU and the Commander, Joint Task Force National Capital Region Medical will also present reports. These actions are necessary for the University to pursue its mission, which is to provide outstanding health care practitioners and scientists to the uniformed services.

Meeting Accessibility: Pursuant to Federal statute and regulations (5 U.S.C. 552b, as amended, and 41 CFR 102–3.140 through 102–3.165) and the availability of space, most of this meeting is open to the public. Seating is on a first-come basis. The closed portion of this meeting is authorized by 5 U.S.C. 552b(c)(6) as the subject matter involves personal and private observations.

Written Statements: Interested persons may submit a written statement for consideration by the Board of Regents. Individuals submitting a written statement must submit their statement to the Designated Federal Official at the address listed above. If such statement is not received at least 10 calendar days prior to the meeting, it may not be provided to or considered by the Board of Regents until its next open meeting. The Designated Federal Official will review all timely submissions with the Board of Regents Chairman and ensure such submissions are provided to Board of Regents Members before the meeting. After reviewing the written comments, submitters may be invited to orally present their issues during the August 2009 meeting or at a future meeting.

Dated: July 6, 2009.

Morgan E. Frazier,

Alternate OSD Federal Register Liaison Officer, Department of Defense.

[FR Doc. E9–16324 Filed 7–9–09; 8:45 am]

BILLING CODE 5001–06–P

DEPARTMENT OF DEFENSE

Office of the Secretary

Defense Advisory Committee on Military Personnel Testing

AGENCY: Under Secretary of Defense for Personnel and Readiness, DoD.

ACTION: Notice of meeting.

SUMMARY: Under the provisions of the Federal Advisory Committee Act of 1972 (5 U.S.C., Appendix, as amended), the Government in the Sunshine Act of 1976 (5 U.S.C. 552b, as amended), and 41 CFR 102–3.150, the Department of Defense announces that the following Federal advisory committee meeting of the Defense Advisory Committee on Military Personnel Testing will take place:

DATES: Wednesday, August 26, 2009 (8:30 a.m. to 4 p.m.) and Thursday, August 27, 2009 (8:30 a.m. to Noon).

ADDRESSES: The meeting will be held at The Mulberry Inn, 601 East Bay Street, Savannah, Georgia 31401.

FOR FURTHER INFORMATION CONTACT: Dr. Jane Arabian, Assistant Director, Accession Policy, Office of the Under Secretary of Defense (Personnel and Readiness), Room 2B271, The Pentagon, Washington, DC 20301–4000, telephone (703) 697–9271.

SUPPLEMENTARY INFORMATION:

Purpose of the Meeting: The purpose of the meeting is to review planned changes and progress in developing computerized and paper-and-pencil enlistment tests.

Agenda: The agenda includes an overview of current enlistment test development timelines and planned research for the next three years.

Public's Accessibility to the Meeting: Pursuant to 5 U.S.C. 552b and 41 CFR 102–3.140 through 102–3.165, and the availability of space, this meeting is open to the public.

Committee's Designated Federal Officer or Point of Contact: Dr. Jane M. Arabian, Assistant Director, Accession Policy, Office of the Under Secretary of Defense (Personnel and Readiness), Room 2B271, The Pentagon, Washington, DC 20301–4000, telephone (703) 697–9271.

Oral Presentations: Persons desiring to make oral presentations or submit written statements for consideration at the Committee meeting must contact Dr. Jane M. Arabian at the address or telephone number above no later than August 15, 2009.

Morgan E. Frazier,

Alternate OSD Federal Register Liaison Officer, Department of Defense.

[FR Doc. E9–16322 Filed 7–9–09; 8:45 am]

BILLING CODE 5001–06–P

DEPARTMENT OF DEFENSE

Office of the Secretary

[Docket ID DOD–2009–OS–0099]

Privacy Act of 1974; Systems of Records

AGENCY: Defense Finance and Accounting Service, DoD.

ACTION: Notice to add a new system of records.

SUMMARY: The Defense Finance and Accounting Service (DFAS) is proposing to add a system of records notice to its inventory of record systems subject to the Privacy Act of 1974, (5 U.S.C. 552a), as amended.

DATES: This Action will be effective without further notice on August 10, 2009 unless comments are received that would result in a contrary determination.

ADDRESSES: Send comments to the FOIA/PA Program Manager, Corporate Communications, Defense Finance and Accounting Service, 8899 East 56th Street, Indianapolis, IN 46249–0150.

FOR FURTHER INFORMATION CONTACT: Ms. Linda Krabbenhoft at (720) 242–6631.

SUPPLEMENTARY INFORMATION: The Defense Finance and Accounting Service notices for systems of records

subject to the Privacy Act of 1974 (5 U.S.C. 552a), as amended, have been published in the **Federal Register** and are available from the address above.

The proposed system report, as required by 5 U.S.C. 552a(r) of the Privacy Act of 1974, as amended, was submitted on June 29, 2009, to the House Committee on Government Reform, the Senate Committee on Governmental Affairs, and the Office of Management and Budget (OMB) pursuant to paragraph 4c of Appendix I to OMB Circular No. A–130, 'Federal Agency Responsibilities for Maintaining Records About Individuals,' dated December 12, 2000, 65 FR 239.

Dated: July 7, 2009.

Morgan E. Frazier,

Alternate OSD Federal Register Liaison Officer, Department of Defense.

T7205a

SYSTEM NAME:

Defense Business Management System (DBMS)

SYSTEM LOCATION:

Defense Information Systems Agency (DISA), Defense Enterprise Computing Center (DECC)—Ogden; 7879 Wardleigh Road; Bldg 891, Hill Air Force Base, UT 84056–5997.

CATEGORIES OF INDIVIDUALS COVERED BY THE SYSTEM:

DoD civilian employees who are paid with Operations & Maintenance (O&M) or Working Capital Funds by the Defense Finance and Accounting Service.

CATEGORIES OF RECORDS IN THE SYSTEM:

Individual's name, address, telephone number, Social Security Number (SSN), appropriation, accounting, reimbursable billing, cost accounting, job order accounting data, and financial reports.

AUTHORITY FOR MAINTENANCE OF THE SYSTEM:

5 U.S.C. 301, Departmental Regulations; 31 U.S.C. Chapter 35, Accounting & Collection; and E.O. 9397 (SSN).

PURPOSE(S):

The system will provide a means of reporting all costs entering the general ledger; account for appropriated funds; provide a means of reconciling financial records; and for the preparation of most financial reports. Records will be used for extraction or compilation of data and reports for management studies and statistical analyses for use internally or externally as required by Department of Defense (DoD) or other government agencies such as the Department of the Treasury.

ROUTINE USES OF RECORDS MAINTAINED IN THE SYSTEMS INCLUDING CATEGORY'S OF USERS AND THE PURPOSES OF SUCH USES:

In addition to those disclosures generally permitted under 5 U.S.C. 552a(b) of the Privacy Act of 1974, these records contained therein may specifically be disclosed outside the DoD as a routine use pursuant to 5 U.S.C. 552a(b)(3) as follows:

The Department of Treasury for all reporting purposes.

The DoD ''Blanket Routine Uses'' set forth at the beginning of the DoD compilation of systems of records notices apply to this system of records.

POLICIES AND PRACTICES FOR STORING, RETRIEVING, ACCESSING, RETAINING, AND DISPOSING OF RECORDS IN THE SYSTEM:

STORAGE:

Paper and/or electronic storage media.

RETRIEVABILITY:

Name and Social Security Number (SSN).

SAFEGUARDS:

Records will be maintained in a controlled facility. Physical entry will be restricted by the use of locks, guards, and is accessible only to authorized personnel. Access to records will be limited to person(s) responsible for servicing the record in performance of their official duties and who are properly screened and cleared for need-to-know. Access to computerized data will be restricted by passwords, which are changed according to agency security policy.

RETENTION AND DISPOSAL:

Records will be cut off at the end of fiscal year and destroyed 3 years after cutoff. Records are destroyed by tearing, shredding, pulping, macerating, burning, or degaussing the electronic media.

SYSTEM MANAGER(S) AND ADDRESS:

System Manager, Defense Finance and Accounting Service—Columbus, (DFAS–HTSEAA/CO), 3990 East Broad Street, Columbus, OH 43213–1152.

NOTIFICATION PROCEDURE:

Individuals seeking to determine whether information about themselves is contained in this record system should address written inquiries to the Defense Finance and Accounting Service, Freedom of Information/ Privacy Act Program Manager, Corporate Communications, 8899 East 56th Street, Indianapolis, IN 46249–0150.

Individuals should furnish full name, Social Security Number, current address, and telephone number.

RECORD ACCESS PROCEDURES:

Individuals seeking access to information about themselves contained in this record system should address written inquiries to Defense Finance and Accounting Service, Freedom of Information/Privacy Act Program Manager, Corporate Communications, 8899 East 56th Street, Indianapolis, IN 46249–0150.

Individuals should furnish full name, Social Security Number, current address, and telephone number.

CONTESTING RECORD PROCEDURES:

The DFAS rules for accessing records, for contesting contents and appealing initial agency determinations are published in DFAS Regulation 5400.11–R; 32 CFR part 324; or may be obtained from Defense Finance and Accounting Service, Freedom of Information/ Privacy Act Program Manager, Corporate Communications, 8899 East 56th Street, Indianapolis, IN 46249–0150.

RECORD SOURCE CATEGORIES:

Information is obtained through system interface from the various DoD agencies including DFAS, Defense Logistics Agency, Defense Commissary Agency, Defense Contract Audit Agency, Defense Contract Management Agency and Naval Supply Systems Agency.

EXEMPTIONS CLAIMED FOR THE SYSTEM:

None.

[FR Doc. E9–16376 Filed 7–9–09; 8:45 am]

BILLING CODE 5001–06–P

DEPARTMENT OF DEFENSE

Office of the Secretary of Defense

Renewal of Department of Defense Federal Advisory Committees

AGENCY: Department of Defense.

ACTION: Renewal of Federal Advisory Committee.

SUMMARY: Under the provisions of the Federal Advisory Committee Act of 1972, (5 U.S.C. Appendix, as amended), the Government in the Sunshine Act of 1976 (5 U.S.C. 552b, as amended), and 41 CFR 102–3.65, the Department of Defense gives notice that it is renewing the charter for the Strategic Environmental Research and Development Program Scientific Advisory board (hereafter referred to as the Advisory Board).

The Board is a non-discretionary federal advisory committee established under the provisions of 10 U.S.C. 2904. Pursuant to 10 U.S.C. 2902 and 10

U.S.C. 2904(e), the Strategic Environmental Research and Development Program Council (hereafter referred to as the Council) shall refer to the Advisory Board and the Advisory Board shall review each proposed research project including its estimated cost, for research in and development of technologies related to environmental activities in excess of $1,000,000. Notwithstanding, the Council, in an effort to enhance the Advisory Board's review process, subsequently lowered the Advisory Board's dollar threshold to any proposed research projects in excess of $900,000. The Advisory Board shall make any recommendations to the Council that the Advisory Board considers appropriate regarding such project or proposal. The Advisory Board may make recommendations to the Council regarding technologies, research, projects, programs, activities, and if appropriate, funding within the scope of the Strategic Environmental Research and Development Program. In addition, the Advisory Board shall assist and advise the Council in identifying the environmental data and analytical assistance activities that should be covered by the policies and procedures prescribed pursuant to 10 U.S.C 2902(d)(1).

The Advisory Board shall be comprised of not less than six and not more than 14 members. Pursuant to 10 U.S.C. 2904(b) the Advisory Board membership shall be comprised of the following: (a) Permanent members of the Advisory Board—the Science Advisor to the President, the Administrator of the National Oceanic and Atmospheric Administration or their designees; (b) One member of the Advisory Board shall be a representative of environmental public interest groups; and (c) One member shall be a representative of the interests of State governments.

Pursuant to 10 U.S.C 2904(b)(3), the Secretary of Defense and the Secretary of Energy, in conjunction with the Administrator of the Environmental Protection Agency, shall request that the: (a) Head of the National Academy of Science, in consultation with the head of the National Academy of Engineering and the head of the Institutes of Medicine of the National Academy of Sciences, nominate persons for appointment to the Advisory Board; (b) Council of Environmental quality nominate for appointment to the Advisory board at least one person who is a representative of environmental public interest groups; and (c) National Association of Governors nominate for appointment to the Advisory Board at least one person who is a representative of the interests of State governments.

With the exception of the permanent Advisory Board members, Advisory Board members, pursuant to 10 U.S.C. 2904(b)(2), shall be appointed from among persons eminent in the fields of basic sciences, engineering, ocean and environmental sciences, education, research management, international and security affairs, health physics, health sciences, or social sciences, with due regard given to the equitable representation of scientists and engineers who are women or represent minority groups.

The Advisory Board, pursuant to 10 U.S.C. 2904(d), shall develop procedures for the annual election of the Advisory Board's chairperson.

Advisory Board members appointed by the Secretary of Defense, who are not full-time or permanent part-time federal officers or employees, shall be appointed as experts and consultants under the authority of 5 U.S.C 3109, and serve as Special Government Employees. The terms of their appointment shall not be less than two but not more than four years and their appointments shall be reviewed by the Secretary of Defense on an annual basis.

Advisory Board members who are Federal officers or employees shall serve without compensation (other than compensation to which they are entitled to as a Federal officer or employee). All Advisory Board members shall receive compensation for travel and per diem for official Advisory Board travel.

With DoD approval, the Advisory Board is authorized to establish Subcommittees or Working Groups, as necessary and consistent with its mission, and these Subcommittees or Working Groups shall operate under the provisions of the Federal Advisory Committee Act of 1972, the Government in the Sunshine Act of 1976 (5 U.S.C. 552b, as amended), and other appropriate federal regulations.

Such Subcommittees or Working Groups shall not work independently of the chartered Advisory Board, and shall report their recommendations and advice to the Advisory Board for full deliberation and discussion. Subcommittees or Working Groups have no authority to make decisions on behalf of the chartered Advisory Board nor can they report directly to DoD or any Federal officers or employees who are not Advisory Board members.

FOR FURTHER INFORMATION: Contact Jim Freeman, Deputy Committee Management Officer for the Department of Defense, 703–601–6128.

SUPPLEMENTARY INFORMATION: The Advisory Board shall meet at the call of the Board's Designated Federal Officer, pursuant to DoD policy, shall be a full-time or permanent part-time DoD employee, and shall be appointed in accordance with established DoD policies and procedures. The Designated Federal Officer or duly appointed Alternate Designated Federal Officer shall attend all committee meetings and subcommittee meetings.

Pursuant to 41 CFR 102–3.105(j) and 102–3.140, the public or interested organizations may submit written statements to the Strategic Environmental Research and Development Program Scientific Advisory Board membership about the Advisory Board's mission and functions. Written statements may be submitted at any time or in response to the stated agenda of planned meeting of the Strategic Environmental Research and Development Program Scientific Advisory Board.

All written statements shall be submitted to the Designated Federal Officer for the Strategic Environmental Research and Development Program Scientific Advisory Board, and this individual will ensure that the written statements are provided to the membership for their consideration. Contact information for the Strategic Environmental Research and Development Program Scientific Advisory Board's Designated Federal Officer can be obtained from the GSA's FACA Database—*https://www.fido.gov/facadatabase/public.asp*.

The Designated Federal Officer, pursuant to 41 CFR 102–3.150, will announce planned meetings of the Strategic Environmental Research and Development Program Scientific Advisory Board. The Designated Federal Officer, at that time, may provide additional guidance on the submission of written statements that are in response to the stated agenda for the planned meeting in question.

Morgan E. Frazier,

Alternate OSD Federal Register Liaison Officer, Department of Defense.

[FR Doc. E9–16325 Filed 7–9–09; 8:45 am]

BILLING CODE 5001–06–P

DEPARTMENT OF DEFENSE

Department of the Army; Corps of Engineers

Notice of Intent To Terminate the Draft Environmental Impact Statement (EIS) for the Potable Water Supply for Washington Parish Reservoir Project

AGENCY: Department of the Army, U.S. Army Corps of Engineers, DOD.

ACTION: Notice of intent.

SUMMARY: The Vicksburg District, Corps of Engineers, is issuing this notice to advise the public that the Draft Environmental Impact Statement (EIS) process for the proposed Potable Water Supply Project for Washington Parish, Louisiana, is terminated. The original Notice of Intent for this EIS process was published in the **Federal Register** on March 28, 2008 (73 FR 16653).

FOR FURTHER INFORMATION CONTACT: Karen Dove-Jackson at (601) 631–7136, Vicksburg District, Corps of Engineers, 4155 Clay Street, CEMVK–OD–FE, Vicksburg, MS 39183–3435.

SUPPLEMENTARY INFORMATION: The U.S. Army Corps of Engineers, Vicksburg District, has terminated the EIS process begun in March 2008, for the proposed potable water supply project located in Washington Parish.

1. The Washington Parish Reservoir Commission completed a site selection study (January 2005) to determine a recommended best source of future potable water for Washington Parish. The study concluded that the creation of a surface water reservoir by damming Bogalusa Creek was the most desirable alternative. The Washington Parish Reservoir Commission subsequently completed a preliminary engineering report (December 2006) that presented preliminary design, planning level costs estimates, and preliminary construction plans for a water supply reservoir. Based upon review of the information submitted with the permit application, the Corps concluded that the proposed project had the potential for significant impacts to the human and natural environment. The proposed project would impact approximately 826 acres of waters of the United States, including wetlands, which are regulated by the Corps, and require a Department of the Army permit to comply with section 404 of the Clean Water Act. The proposed project would also impact cultural resources, threatened and endangered species, and 65 property owners.

2. A public scoping meeting was held on April 10, 2008. Public notice was given for the time and place of the meeting, and approximately 65 people were in attendance. Coordination with Federal, State and local agencies, and private organizations and citizens was initiated, to ensure that the full range of issues related to the proposed action would be addressed and all issues identified.

3. Due to substantial modifications to the originally submitted application for a Department of the Army section 404 permit, and significant changes to the scope of the proposed project, the permit application has been withdrawn and the EIS process has been terminated.

Dated: July 1, 2009.

Michael C. Wehr,

Colonel, Corps of Engineers, District Commander.

[FR Doc. E9–16344 Filed 7–9–09; 8:45 am]

BILLING CODE 3720–58–P

DEPARTMENT OF DEFENSE

Department of the Army; Corps of Engineers

Inland Waterways Users Board

AGENCY: Department of the Army, U.S. Army Corps of Engineers, DoD.

ACTION: Notice of open meeting.

SUMMARY: In Accordance with 10(a)(2) of the Federal Advisory Committee Act (Pub. L. 92–463), announcement is made of the forthcoming meeting.

Name of Committee: Inland Waterways Users Board (Board).

Date: August 11, 2009.

Location: Luther F. Carson Four Rivers Center, 100 Kentucky Ave., Paducah, KY 42003–1500, with accommodations at the Courtyard by Marriott Paducah, 3835 Technology Drive, Paducah, KY 42001 (270–442–3600 or 1–800–321–2211).

Time: Registration will begin at 8 a.m. and the meeting is scheduled to adjourn at approximately 1 p.m.

Agenda: The Board will consider its project investment priorities for the next year, and hear briefings on the status of the funding for inland navigation projects and studies, the status of the Inland Waterways Trust Fund, and the status of program management team activities for a future business model for the inland waterways system.

FOR FURTHER INFORMATION CONTACT: Mr. Mark R. Pointon, Headquarters, U.S. Army Corps of Engineers, CECW–ID, 441 G Street, NW., Washington, DC 20314–1000; Ph: 202–761–4691.

SUPPLEMENTARY INFORMATION: The meeting is open to the public. Any interested person may attend, appear before, or file statements with the committee at the time and in the manner permitted by the committee.

Brenda S. Bowen,

Army Federal Register Liaison Officer.

[FR Doc. E9–16346 Filed 7–9–09; 8:45 am]

BILLING CODE 3720–58–P

DEPARTMENT OF DEFENSE

Office of the Secretary

[Docket ID USAF–2009–0042]

Privacy Act of 1974; System of Records

AGENCY: Department of the Air Force, DoD.

ACTION: Notice to delete a system of records.

SUMMARY: The Department of Air Force proposes to delete a system of records to its inventory of record systems subject to the Privacy Act of 1974 (5 U.S.C. 552a), as amended.

DATES: This proposed action will be effective without further notice on August 10, 2009 unless comments are received which result in a contrary determination.

ADDRESSES: Send comments to the Air Force Privacy Act Officer, Office of Warfighting Integration and Chief Information Officer, SAF/XCPPI, 1800 Air Force Pentagon, Suite 220, Washington, DC 20330–1800.

FOR FURTHER INFORMATION CONTACT: Mr. Ben Swilley at (703) 696–6648.

SUPPLEMENTARY INFORMATION: The Department of the Air Force systems of records notices subject to the Privacy Act of 1974 (5 U.S.C. 552a), as amended, have been published in the **Federal Register** and are available from the address above.

The Department of the Air Force proposes to delete one system of records notice from its inventory of record systems subject to the Privacy Act of 1974 (5 U.S.C. 552a), as amended. The proposed deletion is not within the purview of subsection (r) of the Privacy Act of 1974 (5 U.S.C. 552a), as amended, which requires the submission of a new or altered system report.

Dated: July 7, 2009.

Morgan E. Frazier,

Alternate OSD Federal Register Liaison Officer, Department of Defense.

F061 AFMC A

SYSTEM NAME:

Aeromedical Research Data (11 June 1997, 62 FR 31793).

REASON:

The system is no longer in use.

[FR Doc. E9–16323 Filed 7–9–09; 8:45 am]

BILLING CODE 5001–06–P

DEPARTMENT OF DEFENSE

Department of the Air Force

[Docket ID USAF–2009–0043]

Privacy Act of 1974; System of Records

AGENCY: Department of the Air Force, DoD.

ACTION: Notice to delete a system of records.

SUMMARY: The Department of the Air Force proposes to delete a system of records to its inventory of record systems subject to the Privacy Act of 1974 (5 U.S.C. 552a), as amended.

DATES: This proposed action will be effective without further notice on August 10, 2009 unless comments are received which result in a contrary determination.

ADDRESSES: Send comments to the Air Force Privacy Act Officer, Office of Warfighting Integration and Chief Information Officer, SAF/XCPPI, 1800 Air Force Pentagon, Suite 220, Washington, DC 20330–1800.

FOR FURTHER INFORMATION CONTACT: Mr. Ben Swilley at (703) 696–6648.

SUPPLEMENTARY INFORMATION: The Department of the Air Force systems of records notices subject to the Privacy Act of 1974, (5 U.S.C. 552a), as amended, have been published in the **Federal Register** and are available from the address above.

The Department of the Air Force proposes to delete one system of records notice from its inventory of record systems subject to the Privacy Act of 1974 (5 U.S.C. 552a), as amended. The proposed deletion is not within the purview of subsection (r) of the Privacy Act of 1974, (5 U.S.C. 552a), as amended, which requires the submission of a new or altered system report.

Dated: July 7, 2009.

Morgan E. Frazier,

Alternate OSD Federal Register Liaison Officer, Department of Defense.

F036 AFMC B

SYSTEM NAME:

Systems Acquisition Schools Student Records (June 11, 1997, 62 FR 31793)

REASON:

The system is no longer in use.

[FR Doc. E9–16374 Filed 7–9–09; 8:45 am]

BILLING CODE 5001–06–P

DEPARTMENT OF DEFENSE

Department of the Air Force

[Docket ID USAF–2009–0044]

Privacy Act of 1974; System of Records

AGENCY: Department of the Air Force, DoD.

ACTION: Notice to delete a system of records.

SUMMARY: The Department of the Air Force proposes to delete a system of records to its inventory of record systems subject to the Privacy Act of 1974 (5 U.S.C. 552a), as amended.

DATES: This proposed action will be effective without further notice on August 10, 2009 unless comments are received which result in a contrary determination.

ADDRESSES: Send comments to the Air Force Privacy Act Officer, Office of Warfighting Integration and Chief Information Officer, SAF/XCPPI, 1800 Air Force Pentagon, Suite 220, Washington, DC 20330–1800.

FOR FURTHER INFORMATION CONTACT: Mr. Ben Swilley at (703) 696–6648.

SUPPLEMENTARY INFORMATION: The Department of the Air Force systems of records notices subject to the Privacy Act of 1974 (5 U.S.C. 552a), as amended, have been published in the **Federal Register** and are available from the address above.

The Department of the Air Force proposes to delete one system of records notice from its inventory of record systems subject to the Privacy Act of 1974 (5 U.S.C. 552a), as amended. The proposed deletion is not within the purview of subsection (r) of the Privacy Act of 1974 (5 U.S.C. 552a), as amended, which requires the submission of a new or altered system report.

Dated: July 7, 2009.

Morgan E. Frazier,

Alternate OSD Federal Register Liaison Officer, Department of Defense.

F031 AFMC A

SYSTEM NAME:

AFMC Badge and Vehicle Control Records (January 12, 2009, 74 FR 1184).

REASON:

This records collection for this system is already covered by F031 AF SF B, Security Forces Management Information System (SFMIS) published on October 14, 2003, 68 FR 59168. Accordingly, this Privacy Act System of Records Notice will be deleted from the Air Force's inventory.

[FR Doc. E9–16375 Filed 7–9–09; 8:45 am]

BILLING CODE 5001–06–P

DEPARTMENT OF DEFENSE

Department of the Army

Publication of Revision and Consolidation of Military Freight Traffic Rules Publications (MFTRP) 1C–R (Motor), 10 (Rail), 30 (Barge), 6A (Pipeline), 4A (Tank Truck), Military Standard Tender Instruction Publication (MSTIP) 364D, SpotBid Business Rules, and SDDC Military Class Rate Publication No. 100A to a Consolidation of Procurement Requirements for the Purchase of Commercial Transportation Services Into the Military Freight Traffic Unified Rules Publication (MFTURP) No. 1

AGENCY: Department of the Army, DoD.

ACTION: Notice; correction.

SUMMARY: The notice published in the **Federal Register** on June 9, 2009 (74 FR 27294), indicated a July 9, 2009 effective date. The effective date for this publication will not be July 9, 2009. The effective date will be determined and published at a later date. All publications listed above will remain in effect until further notice.

FOR FURTHER INFORMATION CONTACT: Ms. Dora J. Elias, (757) 878–5379.

SUPPLEMENTARY INFORMATION: None.

Brenda S. Bowen,

Army Federal Register Liaison Officer.

[FR Doc. E9–16345 Filed 7–9–09; 8:45 am]

BILLING CODE 3710–08–P

DEPARTMENT OF EDUCATION

Office of Special Education and Rehabilitative Services; Overview Information; Technology and Media Services for Individuals With Disabilities—Center on Technology Implementation; Notice Inviting Applications for New Awards for Fiscal Year (FY) 2009

Catalog of Federal Domestic Assistance (CFDA) Number: 84.327G.

Dates:

Applications Available: July 10, 2009.

Deadline for Transmittal of Applications: August 10, 2009.

Deadline for Intergovernmental Review: August 19, 2009.

Full Text of Announcement

I. Funding Opportunity Description

Purpose of Program: The purposes of the Technology and Media Services for Individuals with Disabilities program are to: (1) Improve results for children with disabilities by promoting the development, demonstration, and use of technology, (2) support educational media services activities designed to be of educational value in the classroom setting to children with disabilities, and (3) provide support for captioning and video description of educational materials that are appropriate for use in the classroom setting.

Priority: In accordance with 34 CFR 75.105(b)(2)(v), this priority is from allowable activities specified in the statute or otherwise authorized in the statute (see sections 674 and 681(d) of the Individuals with Disabilities Education Act (IDEA), 20 U.S.C. 1474 and 1481(d)).

Absolute Priority: For FY 2009 and any subsequent year in which we make awards from the list of unfunded applicants from this competition, this priority is an absolute priority. Under 34 CFR 75.105(c)(3), we consider only applications that meet this priority.

This priority is:

Technology and Media Services for Individuals with Disabilities—Center on Technology Implementation.

Background: Students with disabilities can benefit from the use of instructional and assistive technology (D.P. Bryant, Goodwin, & B.R. Bryant, 2003; L.S. Fuchs, D. Fuchs, Hamlet, Powell, Capizzi, & Seethaler, 2006; Slavin, Cheung, Groff, & Lake, C., 2008; Slavin & Lake, 2007). However, research suggests that the benefits of using technology depend on the quality of the implementation of the technology (Fitzer, *et al.,* 2007; Zorfass & Rivero, 2005; Slavin, *et al.,* 2008; Morrison, 2007; Todis, 2001).

Implementation of any practice or program is a topic of general concern in education and, fortunately, there is a growing body of knowledge on implementing educational innovations that can help ensure that innovations (including technology innovations) are implemented and sustained with fidelity and effectiveness (Bond, Drake, McHugo, Rapp, Whitley, & National Evidence-Based Practices Project Research Group, in press; Fixsen & Blase, 2009; Fixsen, Naoom, Blase, Friedman, & Wallace, 2005; Mueser, Torrey, Lynde, Singer, & Drake, 2003; Torrey, Lynde, & Gorman, 2005). After an extensive review of available research on implementation Fixsen, *et al.* (2005) identified the following core components (''implementation drivers'') as critical to the successful implementation of any program or practice: (i) Staff recruitment and selection, (ii) preservice and inservice training, (iii) ongoing consultation and coaching, (iv) staff and program evaluation, (v) facilitative administrative supports, and (vi) systems interventions. Furthermore, Fixsen, *et al.* also found that successful implementation of a new practice or program involves a multiyear process that progresses through stages, including exploration and adoption, program installation, initial implementation, full operation, innovation, and sustainability.

There is a growing body of knowledge focusing specifically on the implementation of technology. For example, the following factors have been shown to affect the implementation of technology programs or practices in education: Teacher motivation to use the technology being implemented; compatibility between the technology being implemented and the teacher's pedagogical orientation; the availability of ongoing technology planning and administrative support; professional development relevant to the technology being implemented; and school readiness and infrastructure to support the technology being implemented (Blumenfeld, Fishman, Krajcik, & Marx, 2000; Cradler, 1995; Ertmer, 2005; Glazer, Hannafin, & Song, 2005). To achieve the full benefits of technology for children with disabilities, schools must effectively implement the technology practices or programs. Schools, therefore, can benefit tremendously from having access to better information on effective technology implementation strategies and TA to aid them in successfully implementing technology practices and programs on their own.

Priority: The purpose of this priority is to fund a cooperative agreement to support the establishment and operation of a Center on Technology Implementation (Center) that will develop, test, and disseminate the following two types of products to support effective and sustainable local implementation of evidence-based technology practices and programs to improve educational outcomes for students with disabilities:

(1) *Implementation Resource Kits.* The Center's Implementation Resource Kits must be designed to guide and support the implementation of specific evidence-based technology practices or programs for local educational agencies (LEAs).

(2) *Implementation Practice Guide.* The Center's Implementation Practice Guide must summarize available evidence and provide general guidance (not limited to a specific practice or program) on implementing technology programs and practices to benefit students with disabilities.

To be considered for funding under this absolute priority, applicants must meet the application requirements contained in this priority. Any project funded under this absolute priority also must meet the programmatic and administrative requirements specified in the priority.

Application Requirements. An applicant must include in its application—

(a) A detailed plan for implementing the activities described in the *Project Activities* section of this priority, including:

(1) A dissemination plan that describes the Center's strategy for communicating findings (upon review and approval from OSEP) to key stakeholders, including:

(i) Professional organizations, including but not limited to, the Council of Administrators of Special Education, the National Association of State Directors of Special Education, the Council of the Great City Schools, the Council for Exceptional Children, the National Education Association, The Rehabilitation Engineering and Assistive Technology Society of North America (RESNA) and the American Federation of Teachers.

(ii) Federal technical assistance and dissemination projects, including (but not limited to) the Regional Resource Centers funded under the Individuals with Disabilities Education Act, the Comprehensive Centers and State Educational Technology projects funded under the Elementary and Secondary Education Act of 1965, as amended, statewide assistive technology programs as funded under the Assistive Technology Act of 1998 (as amended), and other relevant Federal projects as determined by OSEP; and

(iii) Technology developers, vendors and researchers.

(2) The dissemination plan must include provisions for preparing national and State TA providers to disseminate and use the Implementation Resource Kits and Implementation Practice Guide without the need for ongoing TA from the Center and after the end of the project period.

(c) A budget for attendance at the following:

(1) A one and one half day kick-off meeting to be held in Washington, DC, within four weeks after receipt of the

award, and an annual planning meeting held in Washington, DC, with the OSEP Project Officer during each subsequent year of the project period.

(2) A three-day Project Directors' Conference in Washington, DC, during each year of the project period; and

(3) A two-day technology project director's meeting in Washington, DC, during each year of the project period.

Project Activities. To meet the requirements of this priority, the Center must conduct the following activities:

(a) Conduct an ongoing review of research and scholarly literature on the implementation of practices and programs in education, with an emphasis on implementing instructional and assistive technology practices and programs with students with disabilities.

(b) Select at least three evidence-based technology practices and programs (which must include at least one technology program, as defined in this notice) upon which to base the development of Implementation Resource Kits. The evidence base for each selected technology practice or program must meet a standard of rigor similar to those applied by one of the following: the What Works Clearinghouse (*http://ies.ed.gov/ncee/wwc/references),* the Best Evidence Encyclopedia (*http://www.bestevidence.org/methods/methods.htm*), or the Campbell Collaboration (*http://www.campbellcollaboration.org*).

Note: The technology practices and programs selected pursuant to paragraph (b) of this section of the priority must make integral use of technology, but may involve other materials and activities as well (*e.g.,* computers used in combination with other hard copy textual materials or World Wide Web activities incorporated into inquiry-based classroom activities).

For purposes of this priority, the following definitions apply [1]:

(1) *Technology practices* are skills, techniques, and strategies involving the use of technology that can be used by practitioners to achieve educational outcomes for students with disabilities. Examples of technology practices include using word processors in writing instruction and making classroom accommodations to integrate AT devices into instruction.

(2) *Technology programs* are integrated collections of technology practices that are performed within a set of defined parameters (*e.g.,* a defined philosophy, a defined service delivery structure, or a defined set of treatment components). Examples of technology programs include schoolwide progress monitoring programs that uses a Web-based system for interpreting data and selecting educational interventions, and programs for systematically assessing individual student needs for assistive technology and supporting the use of the technology in educational settings.

(c) Develop a detailed conceptual framework for implementing each technology practice or program selected pursuant to paragraph (b) of this section of the priority. The Center's detailed conceptual frameworks must—

(1) Describe the core intervention components of the selected technology practices or programs (*i.e.*, key elements such as materials, procedures, teacher resources, and environmental features that must be maintained for the practice or program to be effective);

(2) Describe the core implementation components (as well as their sources) needed for successful implementation of the selected technology practices and programs through all phases of implementation (*i.e.,* initial exploration and adoption through initial implementation, full operation, innovation, and sustainability). (For more information about ''core intervention components'' and ''core implementation components,'' *see* Fixsen *et al.,* 2005, pp. 24–26, and 28–34, respectively);

(3) Describe the anticipated impact on the target group or groups of students, including changes in their learning outcomes and how mediating and moderating variables (*e.g.,* instructional methodology, time-on-task, learning supports, class structure) may affect how well the technology practice or program supports student learning outcomes;

(4) Serve as a basis for designing the Implementation Resource Kits and the formative and summative evaluations of the project.

(d) Develop an Implementation Resource Kit based on the detailed conceptual framework for each selected technology practice and program. (For more information on Implementation Resource Kits, also referred to as implementation packages and toolkits, *see* Mueser, *et al.,* 2003; Torrey, *et al.,* 2005; and McHugo, *et al.,* 2007). The Center must design its Implementation Resource Kits to be usable by TA providers and core implementation components that are typically available to LEAs, so that the Implementation Resource Kits will continue to be used after the completion of the Center's project period. In developing the Implementation Resource Kits, the Center must perform field-based tryouts and formative evaluations of the Implementation Resource Kits, in order to refine and revise the kits, as needed. Each Implementation Resource Kit must include at least the following:

(1) Procedures and instruments to assess the implementation readiness and the implementation needs of the LEA (at the teacher, school, and LEA levels). These procedures and instruments may include surveys, resource inventories, school or LEA self-study guides, observational instruments, and other suitable procedures and instruments and must be drawn to the greatest extent possible from existing procedures and instruments that have been studied and validated in previous research.

(2) Methods and resources to support the implementation process at its various levels (teacher, school, LEA) and through its various phases from initial exploration and adoption through sustainability. These methods and resources may include: Interactive professional development activities and media, community-of-practice guidelines and resources, online awareness and skill development resources, video and multi-media products, sample language for inclusion in technology policies and plans, and public awareness materials to generate broad-based support for sustained implementation, and other suitable methods and resources. The Center should, to the maximum extent possible, include methods and resources that have previously been developed and evaluated.

(3) Procedures and instruments to evaluate implementation as it progresses through the various phases, including measures of the fidelity of implementation, the sustainability, and the impact on students with disabilities. The procedures and instruments must be designed to suggest corrective actions in cases where the implementation is not progressing as desired. The Center should, to the maximum extent possible, include procedures and instruments that have been studied and validated in previous research.

(e) In consultation with participating State educational agencies, field-test each Implementation Resource Kit in 8 to 10 LEAs, including urban, suburban and rural school LEAs, and LEAs with high enrollments of English language learners and low-income students. In these field tests, the Center must study implementation of the selected technology practice or program over a

[1] These definitions of ''technology practice'' and ''technology program'' are adapted from Fixsen, *et al.* (2005 p. 26). The examples provided with these definitions are provided for illustrative purposes only and are not intended to guide the Center's selections nor to imply endorsement of them as evidence based practices.

course of at least three calendar years and the processes of implementation from adoption through full operation and sustainability. The field tests must be designed to evaluate implementation, sustainability, and impact on outcomes for students with disabilities and how the differences in variables such as type of LEA affect implementation. The field test must, to the greatest possible extent, use typically-available TA providers to utilize the Implementation Resource Kits. This will allow the field test to represent typical circumstances and will also foster the capability of the typically-available TA providers to use the Implementation Resource Kits after the end of the project period.

(f) Develop one Implementation Practice Guide on technology implementation for students with disabilities. In contrast to the Implementation Resource Kits, which apply to specific technology practices and programs, the Implementation Practice Guide must apply generally to the implementation of technology (assistive and instructional) to benefit students with disabilities. The Implementation Practice Guide must be developed by a panel of experts through a systematic process of reviewing evidence that supports specific recommendations and documenting the level of support for each recommendation. The following Web site provides examples of practice guides and the procedures for developing them: *http://ies.ed.gov/ncee/wwc/publications/practiceguides.*

(g) Establish and maintain an advisory committee to review the activities and outcomes of the Center and to provide programmatic support and advice throughout the project period. At a minimum, the advisory committee must meet on an annual basis in Washington, DC, and consist of individuals with knowledge and expertise in: Effective instructional technology and assistive technology, effective schoolwide and LEA-wide technology implementation practices, and rigorous evaluation methods. The committee membership must also include individuals with disabilities, parents of individuals with disabilities, and individuals from communities representing rural, low-income, urban and limited English proficiency populations. The Center must submit the names of proposed members of the advisory committee to the Office of Special Education Programs (OSEP) for approval within eight weeks after receipt of the award.

(h) Prior to developing any new paper or electronic product, submit a proposal describing the content and purpose of the product to the OSEP Project Officer and the Proposed Product Advisory Board at OSEP's Technical Assistance Coordination Center for approval.

(i) Conduct a summative evaluation of both the Implementation Resource Kits and Implementation Practice Guide in collaboration with the Center to Improve Project Performance (CIPP) as described in the following paragraphs.

Note: The major tasks of CIPP are to guide, coordinate, and oversee the summative evaluations conducted by selected Technical Assistance, Personnel Development, Parent Training and Information Centers, and Technology projects that individually receive $500,000 or more funding from OSEP annually. The efforts of CIPP are expected to enhance individual project evaluations by providing expert and unbiased assistance in designing evaluations, conducting analyses, and interpreting data.

To fulfill the requirements of the summative evaluation to be conducted under the guidance of CIPP, the Center must—

(1) Hire or designate, with the approval of the OSEP Project Officer, a project liaison staff person with sufficient dedicated time, experience in evaluation, and knowledge of the Center to work with CIPP on the following tasks:

(i) Planning for the Center's summative evaluation (*e.g.,* selecting evaluation questions, developing a timeline for the evaluation, locating sources of relevant data, and refining the conceptual frameworks used for the evaluation).

(ii) Developing the summative evaluation design and instrumentation (*e.g.,* determining quantitative or qualitative data collection strategies, selecting respondent samples, and pilot testing instruments).

(iii) Coordinating the evaluation timeline with the implementation of the Center's activities.

(iv) Collecting summative data.

(v) Writing reports of summative evaluation findings.

(2) Cooperate with CIPP staff in order to accomplish the tasks described in paragraph (1) of this section; and

(3) Dedicate a minimum of $65,000 of the annual budget request for this project to cover the costs of carrying out the tasks described in paragraphs (1) and (2) of this section, implementing the Center's formative evaluation and traveling to Washington, DC, in the second year of the project period for the Center's review for continued funding.

(j) Maintain ongoing communication with the OSEP Project Officer through regular teleconferences and e-mail communication.

Fourth and Fifth Years of the Project: In deciding whether to continue funding the Center for the fourth and fifth years, the Secretary will consider the requirements of 34 CFR 75.253(a), and in addition—

(a) The recommendation of a review team consisting of experts selected by the Secretary. This review will be conducted during a one-day intensive meeting in Washington, DC, that will be held during the last half of the second year of the project period. The Center must budget for travel expenses associated with this one-day intensive review;

(b) The timeliness and effectiveness with which all requirements of the negotiated cooperative agreement have been or are being met by the Center; and

(c) The degree to which the Center's activities have the potential to contribute to changed practice and improved implementation of technologies and access and progress in the general education curriculum for students with disabilities.

References: Bond, G.R., Drake, R.E., McHugo, G.J., Rapp, C.A., Whitley, R., & National Evidence-Based Practices Project Research Group. Strategies for improving fidelity in the National Evidence-Based Practices Project. Research on Social Work Practice, in press.

Blumenfeld, P., Fishman, B.J., Krajcik, J., & Marx, R.W. (2000). Creating usable innovations in systemic reform: Scaling up technology-embedded project-based science in urban schools. *Educational Psychologist,* 35(3), 149–164.

Bryant, D.P., Goodwin, M., & Bryant, B.R. (2003). Vocabulary Instruction for Students with Learning Disabilities: A Review of the Research. *Learning Disability Quarterly,* 26(2), 117–28.

Cradler, J. (1995). Implementing technology in education: Recent findings from research and evaluation studies. Far West Laboratory. Retrieved on February 1, 2008 from, *http://www.wested.org/techpolicy/;recapproach.html.*

Ertmer, P.A. (2005). Teacher pedagogical beliefs: the final frontier in our quest for technology integration? *Educational Technology Research and Development,* 53(4), 25–39.

Fitzer, K.M., Freidhoff, J.R., Fritzen, A., Heintz, A., Koehler, J., Mishra, P., Ratcliffe, J., Zhang, T., Zheng, J., & Zhou, W. (2007). Guest editorial: More questions than answers: Responding to the reading and mathematics software effectiveness study. Contemporary Issues in Technology and Teacher Education, 7(2), 1–6.

Fixsen, D.L., & Blase, K.A. (2009, January). Implementation: The missing link between research and practice. NIRN Implementation Brief #1. Chapel Hill: The University of North Carolina, FPG, NIRN.

Fixsen, D.L., Blase, K.A., Horner, R., & Sugai, G. (2009, February). Scaling-up

evidence-based practices in education. Scaling-up Brief #1. Chapel Hill: The University of North Carolina, FPG, SISEP.

Fixsen, D.L., Naoom, S.F., Blase, K.A., Friedman, R.M., & Wallace, F. (2005). Implementation research: A synthesis of the literature. Tampa, FL: University of South Florida, Louis de la Parte Florida Mental Health Institute, The National Implementation Research; available at *http://www.fpg.unc.edu/~nirn/resources/publications/Monograph/.*

Fuchs, L.S., Fuchs, D., Hamlet, C.L., Powell, S.R., Capizzi, A.M., & Seethaler, P.M. (2006). The Effects of Computer-Assisted Instruction on Number Combination Skill in At-Risk First Graders. Journal of Learning Disabilities, 39(5), 467–75.

Glazer, E., Hannafin, M.J., & Song, L. (2005). Promoting technology integration through collaborative apprenticeship. *Educational Technology Research and Development,* 53(4), 57–67.

McHugo, G.M., Drake, R.E., Whitley, R., Bond, G.R., Campbell, K., Rapp, C.A., Goldman, H.H., Lutz, W., & Finnerty, M. (2007). Fidelity outcomes in the National Implementing Evidence-Based Practices Project. *Psychiatric Services,* 58, 1279–1284.

Morrison, K. (2007). Implementation of Assistive Computer Technology: A Model for School Systems. *International Journal of Special Education,* 22(1), 83–95.

Mueser, K.T., Torrey, W.C., Lynde, D., Singer, P., & Drake, R.E. (2003). Implementing evidence-based practices for people with severe mental illness. *Behavior Modification,* 27(3), 387–411.

Slavin, R.E. & Lake, C. (2007, February). Effective programs in elementary mathematics: A best-evidence synthesis. Baltimore, MD: Johns Hopkins University, Center for Data-Driven Reform in Education.

Slavin, R.E., Cheung, A., Groff, C., and Lake, C. (2008). Effective reading programs for middle and high schools: A best evidence synthesis. *Reading Research Quarterly,* 43, 3, 290–322.

Todis, B. (2001). It can't hurt: Implementing AAC technology in the classroom for students with severe and multiple disabilities. In Woodward, J., & Cuban, L. (Eds.) *Technology, curriculum, and professional development: Adapting schools to meet the needs of students with disabilities.* Thousand Oaks, Calif: Corwin Press.

Torrey, W.C., Lynde, D.W., & Gorman, P. (2005). Promoting the implementation of practices that are supported by research: The National Implementing Evidence-Based Practice Project. *Child and Adolescent Psychiatric Clinics of North America,* 14 (2), 297–306.

Zorfass, J., & Rivero, H.K. (2005). Collaboration is Key: How a Community of Practice Promotes Technology Integration. *Journal of Special Education Technology,* 20 (3), 51–60.

Waiver of Proposed Rulemaking: Under the Administrative Procedure Act (APA) (5 U.S.C. 553), the Department generally offers interested parties the opportunity to comment on proposed priorities and requirements. Section 681(d) of the IDEA, however, makes the public comment requirements of the APA inapplicable to the priority in this notice.

Program Authority: 20 U.S.C. 1474 and 1481.

Applicable Regulations: The Education Department General Administrative Regulations (EDGAR) in 34 CFR parts 74, 75, 77, 79, 80, 81, 82, 84, 85, 86, 97, 98, and 99.

Note: The regulations in 34 CFR part 79 apply to all applicants except Federally recognized Indian Tribes.

Note: The regulations in 34 CFR part 86 apply to institutions of higher education (IHEs) only.

II. Award Information

Type of Award: Cooperative Agreement.

Estimated Available Funds: $1,375,000.

Contingent upon the availability of funds and the quality of applications, we may make additional awards in FY 2010 from the list of unfunded applicants from this competition.

Maximum Award: We will reject any application that proposes a budget exceeding $1,375,000 for a single budget period of 12 months. The Assistant Secretary for Special Education and Rehabilitative Services may change the maximum amount through a notice published in the **Federal Register**.

Estimated Number of Awards: 1.

Note: The Department is not bound by any estimates in this notice.

Project Period: Up to 60 months.

III. Eligibility Information

1. *Eligible Applicants:* State educational agencies; local educational agencies (LEAs), including public charter schools that are considered LEAs under State law; IHEs; other public agencies; private nonprofit organizations; outlying areas; freely associated States; Indian Tribes or Tribal organizations; and for-profit organizations.

2. *Cost Sharing or Matching:* This competition does not require cost sharing or matching.

3. *Other: General Requirements*—(a) The projects funded under this competition must make positive efforts to employ and advance in employment qualified individuals with disabilities (*see* section 606 of the IDEA).

(b) Applicants and grant recipients funded under this competition must involve individuals with disabilities or parents of individuals with disabilities ages birth through 26 in planning, implementing, and evaluating the projects (*see* section 682(a)(1)(A) of the IDEA).

IV. Application and Submission Information

1. Address To Request Application Package

Education Publications Center (ED Pubs), P.O. Box 1398, Jessup, MD 20794–1398. Telephone, toll free: 1–877–433–7827. FAX: (301) 470–1244. If you use a telecommunications device for the deaf (TDD), call, toll free: 1–877–576–7734.

You can contact ED Pubs at its Web site, also: *http://www.ed.gov/pubs/edpubs.html* or at its e-mail address: *edpubs@inet.ed.gov.*

If you request an application package from ED Pubs, be sure to identify this competition as follows: CFDA number 84.327G.

Individuals with disabilities can obtain a copy of the application package in an accessible format (*e.g.,* braille, large print, audiotape, or computer diskette) by contacting the person or team listed under *Accessible Format* in section VIII of this notice.

2. Content and Form of Application Submission

Requirements concerning the content of an application, together with the forms you must submit, are in the application package for this competition.

Page Limit: The application narrative (Part III of the application) is where you, the applicant, address the selection criteria that reviewers use to evaluate your application. You must limit the application narrative to the equivalent of no more than 50 pages, using the following standards:

- A ''page'' is 8.5″ x 11″, on one side only, with 1″ margins at the top, bottom, and both sides.
- Double space (no more than three lines per vertical inch) all text in the application narrative, including titles, headings, footnotes, quotations, references, and captions, as well as all text in charts, tables, figures, and graphs.
- Use a font that is either 12 point or larger or no smaller than 10 pitch (characters per inch).

The page limit does not apply to Part I, the cover sheet; Part II, the budget section, including the narrative budget justification; Part IV, the assurances and certifications; or the one-page abstract, the resumes, the bibliography, the references, or the letters of support.

However, the page limit does apply to all of the application narrative section (Part III).

We will reject your application if you exceed the page limit or if you apply other standards and exceed the equivalent of the page limit.

3. Submission Dates and Times

Applications Available: July 10, 2009.

Deadline for Transmittal of Applications: August 10, 2009.

Applications for grants under this competition may be submitted electronically using the Electronic Grant Application System (e-Application) accessible through the Department's e-Grants site, or in paper format by mail or hand delivery. For information (including dates and times) about how to submit your application electronically, or in paper format by mail or hand delivery, please refer to section IV.6. *Other Submission Requirements* of this notice.

We do not consider an application that does not comply with the deadline requirements.

Individuals with disabilities who need an accommodation or auxiliary aid in connection with the application process should contact the person listed under **FOR FURTHER INFORMATION CONTACT** in section VII of this notice. If the Department provides an accommodation or auxiliary aid to an individual with a disability in connection with the application process, the individual's application remains subject to all other requirements and limitations in this notice.

Deadline for Intergovernmental Review: August 19, 2009.

4. Intergovernmental Review

This competition is subject to Executive Order 12372 and the regulations in 34 CFR part 79. Information about Intergovernmental Review of Federal Programs under Executive Order 12372 is in the application package for this competition.

5. Funding Restrictions

We reference regulations outlining funding restrictions in the *Applicable Regulations* section of this notice.

6. Other Submission Requirements

Applications for grants under this competition may be submitted electronically or in paper format by mail or hand delivery.

a. Electronic Submission of Applications

If you choose to submit your application to us electronically, you must use e-Application, accessible through the Department's e-Grants Web site at: *http://e-grants.ed.gov.*

While completing your electronic application, you will be entering data online that will be saved into a database. You may not e-mail an electronic copy of a grant application to us.

Please note the following:

- Your participation in e-Application is voluntary.
- You must complete the electronic submission of your grant application by 4:30:00 p.m., Washington, DC time, on the application deadline date. E-Application will not accept an application for this competition after 4:30:00 p.m., Washington, DC time, on the application deadline date. Therefore, we strongly recommend that you do not wait until the application deadline date to begin the application process.
- The hours of operation of the e-Grants Web site are 6:00 a.m. Monday until 7:00 p.m. Wednesday; and 6:00 a.m. Thursday until 8:00 p.m. Sunday, Washington, DC time. Please note that, because of maintenance, the system is unavailable between 8:00 p.m. on Sundays and 6:00 a.m. on Mondays, and between 7:00 p.m. on Wednesdays and 6:00 a.m. on Thursdays, Washington, DC time. Any modifications to these hours are posted on the e-Grants Web site.
- You will not receive additional point value because you submit your application in electronic format, nor will we penalize you if you submit your application in paper format.
- You must submit all documents electronically, including all information you typically provide on the following forms: the Application for Federal Assistance (SF 424), the Department of Education Supplemental Information for SF 424, Budget Information—Non-Construction Programs (ED 524), and all necessary assurances and certifications. You must attach any narrative sections of your application as files in a .DOC (document), .RTF (rich text), or .PDF (Portable Document) format. If you upload a file type other than the three file types specified in this paragraph or submit a password protected file, we will not review that material.
- Your electronic application must comply with any page limit requirements described in this notice.
- Prior to submitting your electronic application, you may wish to print a copy of it for your records.
- After you electronically submit your application, you will receive an automatic acknowledgment that will include a PR/Award number (an identifying number unique to your application).
- Within three working days after submitting your electronic application, fax a signed copy of the SF 424 to the Application Control Center after following these steps:

(1) Print SF 424 from E-Application.

(2) The applicant's Authorizing Representative must sign this form.

(3) Place the PR/Award number in the upper right hand corner of the hard-copy signature page of the SF 424.

(4) Fax the signed SF 424 to the Application Control Center at (202) 245–6272.

- We may request that you provide us original signatures on other forms at a later date.

Application Deadline Date Extension in Case of System Unavailability: If you are prevented from electronically submitting your application on the application deadline date because E-Application is unavailable, we will grant you an extension of one business day to enable you to transmit your application electronically, by mail, or by hand delivery. We will grant this extension if—

(1) You are a registered user of e-Application and you have initiated an electronic application for this competition; and

(2)(a) E-Application is unavailable for 60 minutes or more between the hours of 8:30 a.m. and 3:30 p.m., Washington, DC time, on the application deadline date; or

(b) E-Application is unavailable for any period of time between 3:30 p.m. and 4:30:00 p.m., Washington, DC time, on the application deadline date.

We must acknowledge and confirm these periods of unavailability before granting you an extension. To request this extension or to confirm our acknowledgment of any system unavailability, you may contact either (1) the person listed elsewhere in this notice under **FOR FURTHER INFORMATION CONTACT** (*see* VII. Agency Contact) or (2) the e-Grants help desk at 1–888–336–8930. If E-Application is unavailable due to technical problems with the system and, therefore, the application deadline is extended, an e-mail will be sent to all registered users who have initiated an e-Application.

Extensions referred to in this section apply only to the unavailability of e-Application. If e-Application is available, and, for any reason, you are unable to submit your application electronically or you do not receive an automatic acknowledgment of your submission, you may submit your application in paper format by mail or

hand delivery in accordance with the instructions in this notice.

b. Submission of Paper Applications by Mail

If you submit your application in paper format by mail (through the U.S. Postal Service or a commercial carrier), you must mail the original and two copies of your application, on or before the application deadline date, to the Department at the following address: U.S. Department of Education, Application Control Center, *Attention:* (CFDA Number 84.327G), LBJ Basement Level 1, 400 Maryland Avenue, SW., Washington, DC 20202–4260.

You must show proof of mailing consisting of one of the following:

(1) A legibly dated U.S. Postal Service postmark.

(2) A legible mail receipt with the date of mailing stamped by the U.S. Postal Service.

(3) A dated shipping label, invoice, or receipt from a commercial carrier.

(4) Any other proof of mailing acceptable to the Secretary of the U.S. Department of Education.

If you mail your application through the U.S. Postal Service, we do not accept either of the following as proof of mailing:

(1) A private metered postmark.

(2) A mail receipt that is not dated by the U.S. Postal Service.

If your application is postmarked after the application deadline date, we will not consider your application.

Note: The U.S. Postal Service does not uniformly provide a dated postmark. Before relying on this method, you should check with your local post office.

c. Submission of Paper Applications by Hand Delivery

If you submit your application in paper format by hand delivery, you (or a courier service) must deliver the original and two copies of your application by hand, on or before the application deadline date, to the Department at the following address: U.S. Department of Education, Application Control Center, *Attention:* (CFDA Number 84.327G), 550 12th Street, SW., Room 7041, Potomac Center Plaza, Washington, DC 20202–4260.

The Application Control Center accepts hand deliveries daily between 8:00 a.m. and 4:30:00 p.m., Washington, DC time, except Saturdays, Sundays, and Federal holidays. Note for Mail or Hand Delivery of Paper Applications: If you mail or hand deliver your application to the Department—

(1) You must indicate on the envelope and—if not provided by the Department—in Item 11 of the SF 424 the CFDA number, including suffix letter, if any, of the competition under which you are submitting your application; and

(2) The Application Control Center will mail to you a notification of receipt of your grant application. If you do not receive this grant notification within 15 business days from the application deadline date, you should call the U.S. Department of Education Application Control Center at (202) 245–6288.

V. Application Review Information

1. *Selection Criteria:* The selection criteria for this competition are from 34 CFR 75.210 and are listed in the application package.

2. *Review and Selection Process:* In the past, the Department has had difficulty finding peer reviewers for certain competitions because so many individuals who are eligible to serve as peer reviewers have conflicts of interest. The Standing Panel requirements under the IDEA also have placed additional constraints on the availability of reviewers. Therefore, the Department has determined that, for some discretionary grant competitions, applications may be separated into two or more groups and ranked and selected for funding within the specific groups. This procedure will make it easier for the Department to find peer reviewers by ensuring that greater numbers of individuals who are eligible to serve as reviewers for any particular group of applicants will not have conflicts of interest. It also will increase the quality, independence, and fairness of the review process while permitting panel members to review applications under discretionary grant competitions for which they also have submitted applications. However, if the Department decides to select an equal number of applications in each group for funding, this may result in different cut-off points for fundable applications in each group.

VI. Award Administration Information

1. *Award Notices:* If your application is successful, we notify your U.S. Representative and U.S. Senators and send you a Grant Award Notification (GAN). We may notify you informally, also.

If your application is not evaluated or not selected for funding, we notify you.

2. *Administrative and National Policy Requirements:* We identify administrative and national policy requirements in the application package and reference these and other requirements in the *Applicable Regulations* section of this notice.

We reference the regulations outlining the terms and conditions of an award in the *Applicable Regulations* section of this notice and include these and other specific conditions in the GAN. The GAN also incorporates your approved application as part of your binding commitments under the grant.

3. *Reporting:* At the end of your project period, you must submit a final performance report, including financial information, as directed by the Secretary. If you receive a multi-year award, you must submit an annual performance report that provides the most current performance and financial expenditure information as directed by the Secretary under 34 CFR 75.118. The Secretary may also require more frequent performance reports under 34 CFR 75.720(c). For specific requirements on reporting, please go to *http://www.ed.gov/fund/grant/apply/appforms/appforms.html.*

4. *Performance Measures:* Under the Government Performance and Results Act of 1993 (GPRA), the Department has established a set of performance measures, including long-term measures, that are designed to yield information on various aspects of the effectiveness and quality of the Technology and Media Services for Individuals with Disabilities program. These measures focus on the extent to which projects are high-quality, are relevant to improving outcomes of children with disabilities, and contribute to improving outcomes for children with disabilities. We will collect data on these measures from the project funded under this competition.

The grantee will be required to report information on its project's performance in annual reports to the Department (34 CFR 75.590).

VII. Agency Contact

FOR FURTHER INFORMATION CONTACT: David Malouf, U.S. Department of Education, 400 Maryland Avenue, SW., Room 4119, Potomac Center Plaza (PCP), Washington, DC 20202–2550. Telephone: (202) 245–6253.

If you use a TDD, call the Federal Relay Service (FRS), toll free, at 1–800–877–8339.

VIII. Other Information

Accessible Format: Individuals with disabilities can obtain this document and a copy of the application package in an accessible format (*e.g.,* braille, large print, audiotape, or computer diskette) by contacting the Grants and Contracts Services Team, U.S. Department of Education, 400 Maryland Avenue, SW., Room 5075, PCP, Washington, DC 20202–2550. Telephone: (202) 245–

7363. If you use a TDD, call the FRS, toll free, at 1–800–877–8339.

Electronic Access to This Document: You can view this document, as well as all other documents of this Department published in the **Federal Register**, in text or Adobe Portable Document Format (PDF) on the Internet at the following site: *http://www.ed.gov/news/fedregister.*

To use PDF you must have Adobe Acrobat Reader, which is available free at this site. If you have questions about using PDF, call the U.S. Government Printing Office (GPO), toll free, at 1–888–293–6498; or in the Washington, DC, area at (202) 512–1530.

Note: The official version of this document is the document published in the **Federal Register**. Free Internet access to the official edition of the **Federal Register** and the Code of Federal Regulations is available on GPO Access at: *http://www.gpoaccess.gov/nara/index.html.*

Delegation of Authority: The Secretary of Education has delegated authority to Andrew J. Pepin, Executive Administrator for the Office of Special Education and Rehabilitative Services, to perform the functions of the Assistant Secretary for Special Education and Rehabilitative Services.

Dated: July 6, 2009.

Andrew J. Pepin,

Executive Administrator for Special Education and Rehabilitative Services.

[FR Doc. E9–16380 Filed 7–9–09; 8:45 am]

BILLING CODE 4000–01–P

DEPARTMENT OF EDUCATION

Office of Special Education and Rehabilitative Services; Overview Information; Technical Assistance and Dissemination To Improve Services and Results for Children With Disabilities—Regional Resource Centers; Notice Inviting Applications for New Awards for Fiscal Year (FY) 2009

Catalog of Federal Domestic Assistance (CFDA) Number: 84.326R.

DATES:

Applications Available: July 10, 2009.

Deadline for Transmittal of Applications: August 10, 2009.

Deadline for Intergovernmental Review: August 19, 2009.

Full Text of Announcement

I. Funding Opportunity Description

Purpose of Program: The purpose of the Technical Assistance and Dissemination to Improve Services and Results for Children with Disabilities program is to promote academic achievement and to improve results for children with disabilities by providing technical assistance (TA), supporting model demonstration projects, disseminating useful information, and implementing activities that are supported by scientifically based research.

Priority: In accordance with 34 CFR 75.105(b)(2)(v), this priority is from allowable activities specified in the statute or otherwise authorized in the statute (see sections 663 and 681(d) of the Individuals with Disabilities Education Act (IDEA), 20 U.S.C. 1400, *et seq.*).

Absolute Priority: For FY 2009 and any subsequent year in which we make awards based on the list of unfunded applicants from this competition, this priority is an absolute priority. Under 34 CFR 75.105(c)(3), we consider only applications that meet this priority.

This priority is:

Technical Assistance and Dissemination to Improve Services and Results for Children With Disabilities—Regional Resource Centers.

Background

Over the last four decades, the Office of Special Education Programs (OSEP) has supported Regional Resource Centers to provide TA that is targeted to meet State-specific needs related to meeting the program requirements under Parts B and C of IDEA.

Historically, each RRC functioned independently, serving primarily as a TA provider to State educational agencies (SEAs) in the RRC's region helping the SEAs address self-identified needs related to providing services to children with disabilities. In 1998, RRCs' traditional role as TA providers expanded when they also began serving as brokers of TA, linking SEAs and local educational agencies (LEAs) to relevant OSEP-funded TA centers. Over time, and as OSEP developed its monitoring of Part C programs and issued monitoring reports from 1998 through 2003, RRCs began providing TA in their respective regions to the State Part C lead agencies (LAs).

When IDEA was last reauthorized in 2004, the increased general supervision responsibilities of SEAs and LAs under Parts B and C, respectively, also increased the need for general supervision support and collaboration among RRCs and other OSEP-funded TA Centers (*i.e.,* the National Dropout Prevention Center for Students with Disabilities and the Data Accountability Center) to provide coordinated and meaningfully informed TA. Specifically, sections 616(b) and 642 of IDEA require each State to have in place a State Performance Plan (SPP) that evaluates the State's efforts to implement requirements under Parts B and C of IDEA and that describes how the State will improve its implementation of these requirements. The SPP must include measurable and rigorous targets for quantifiable indicators in the priority areas described in section 616(a)(3) of IDEA. These priority areas for Part B are—providing a free appropriate public education (FAPE) in the least restrictive environment (LRE); reducing disproportionate representation of racial and ethnic groups in special education and related services, to the extent the representation is the result of inappropriate identification; and ensuring effective general supervision, including child find, transition, and dispute resolution. These priority areas for Part C are—providing early intervention services in natural environments and ensuring effective general supervision, including child find, transition, and dispute resolution.

Additionally, sections 616 and 642 of IDEA require each SEA and LA to conduct many activities annually. Each SEA and LA must submit an Annual Performance Report (APR) to the Secretary on the State's progress in meeting its targets in each of the priority areas under Parts B and C of IDEA. There are 20 priority indicators under Part B (including early childhood transition, postsecondary transition, graduation, and dropout prevention) and 14 priority indicators under Part C (including provision of early intervention services in the natural environment, timely provision of services, timely evaluation, and early childhood transition). OSEP issues annual letters of determination and response tables for each State under Parts B and C of IDEA based in large part on the State's APR data in each of these priority indicator areas.

In turn, SEAs must monitor and evaluate LEAs' implementation of Part B, and State LAs must monitor and evaluate the implementation of Part C by early intervention service (EIS) programs. Each year, the SEA and LA must publicly report on the performance of each LEA or EIS program in each of the priority areas and issue a local ''determination.'' Through such reporting, SEAs and LAs are responsible for ensuring both the continuous improvement of results and functional outcomes for children with disabilities and the timely correction of noncompliance with IDEA requirements.

The Department first issued its annual determinations under sections 616 and 642 of IDEA in 2007 and made one of

the following determinations for each State: (1) The State meets IDEA requirements, (2) the State needs assistance, or (3) the State needs intervention. Under section 616(e)(1) of IDEA, when conducting its second annual determinations in 2008, the Department was required to take enforcement actions for those States determined to be in ''needs assistance'' for two consecutive years. One of those enforcement options was advising a State of the availability of TA, including the resources of the RRCs and the need to utilize such TA. In 2008, the Department advised 25 Part B SEAs and 17 Part C LAs determined to be in ''needs assistance'' for two consecutive years of the requirement to access TA under section 616(e)(1)(A) of IDEA. In 2009, the Department must take specific enforcement actions for those States determined to be in ''needs intervention'' for three consecutive years, which may include the development of an improvement plan or corrective action plan. These enforcement options will require continued and additional TA support of SEAs and State LAs.

In addition, the State Fiscal Stabilization Fund (SFSF), authorized by the American Recovery and Reinvestment Act of 2009 (ARRA), Public Law No. 111–5, identifies four goals that the Secretary considers to be central to improving the results for children with disabilities. Areas addressed by these goals include: (1) Rigorous college- and career-ready standards and assessments; (2) State longitudinal data systems to track progress from pre-K to college or work; (3) improvements in teacher effectiveness; and (4) intensive support for the lowest-performing schools. The SFSF goals directly align with the SPP priority indicators and the SPP targets. The following Web site provides more information on ARRA: *http://www.ed.gov/policy/gen/leg/recovery/factsheet/stabilization-fund.html.*

To ensure that RRCs are available to meet these increased TA needs, OSEP has determined that new funding is needed to support consistent and collaborative work between the six regional RRCs while addressing the increased SEA and LA general supervision responsibilities under Parts B and C of IDEA.

Priority

The purpose of this priority is to fund cooperative agreements to support the operation of six RRCs that will collaboratively provide coordinated and research-based TA to SEAs and LAs to help them: (1) Meet Federal accountability requirements under IDEA; (2) implement systems of general supervision that improve results and functional outcomes for children with disabilities; (3) work with OSEP-funded TA centers, as appropriate, to develop, identify, and implement evidenced-based tools and practices to increase the likelihood that SEAs and LAs will meet their SPP targets in the priority areas described in section 616(a)(3), such as providing FAPE in the LRE, early childhood transition, secondary transition, postsecondary outcomes, graduation, and dropout prevention; and (4) develop and implement strategies that address the SFSF goals outlined in the ARRA and other critical goals that align with the indicators established under IDEA.

The Secretary establishes the following geographic regions for the RRCs—

Region 1: Connecticut, Maine, Massachusetts, New Hampshire, New Jersey, New York, Pennsylvania, Rhode Island, and Vermont;

Region 2: Delaware, the District of Columbia, Kentucky, Maryland, North Carolina, South Carolina, Tennessee, Virginia, and West Virginia;

Region 3: Alabama, Arkansas, Florida, Georgia, Louisiana, Mississippi, Oklahoma, Texas, Puerto Rico, and the Virgin Islands;

Region 4: Illinois, Indiana, Iowa, Michigan, Minnesota, Missouri, Ohio, and Wisconsin;

Region 5: Arizona, Colorado, Kansas, Montana, New Mexico, Nebraska, North Dakota, South Dakota, Utah, Wyoming, and the Bureau of Indian Affairs;

Region 6: Alaska, California, Hawaii, Idaho, Nevada, Oregon, Washington, American Samoa, Guam, the Commonwealth of the Northern Marianas, the Federated States of Micronesia, the Republic of the Marshall Islands, and the Republic of Palau.

To be considered for funding under this absolute priority, applicants must meet the application requirements contained in this priority. All projects funded under this absolute priority also must meet the programmatic and administrative requirements specified in the priority.

Application Requirements. An applicant must include in its application—

(a) A logic model for the RRC that depicts, at a minimum, the goals, activities, outputs, and outcomes of the proposed RRC. A logic model communicates how the RRC will achieve its outcomes and provides a framework for both the formative and summative evaluations of the RRC;

Note: The following Web site provides more information on logic models and lists multiple online resources: *http://www.cdc.gov/eval/resources.htm.*

(b) A plan to implement the activities described in the *Project Activities* section of this priority;

(c) A plan, linked to the proposed project's logic model, for a formative evaluation of the proposed project's activities. The plan must describe how the formative evaluation will use clear performance objectives to ensure continuous improvement in the operation of the proposed project, including objective measures of progress in implementing the project and ensuring the quality of products and services;

(d) A budget for a summative evaluation to be conducted by an independent third party;

(e) A budget for attendance at the following:

(1) A four day kick-off meeting to be held in Washington, DC, within four weeks after receipt of the award, and an annual two-day planning meeting held in Washington, DC, with the OSEP Project Officer during each subsequent year of the project period. The initial kick-off meeting must allow time for the RRCs to collectively develop an action plan to address how they will share resources when appropriate (see, *e.g.,* paragraph (f) below). The action plan for year one must be finalized within three months of the award. The action plans for years two and three must be developed at the close of years one and two respectively.

(2) A three-day Project Directors' Conference in Washington, DC, during each year of the project period.

(3) A four-day Technical Assistance and Dissemination Conference in Washington, DC, during each year of the project period.

(4) Four two-day trips annually to attend Department briefings, Department-sponsored conferences, and other meetings, as requested by OSEP;

(f) A line item in the proposed budget that will support the cost, shared among all of the RRCs when established, for hiring, at a minimum, one full-time coordinator (1 FTE) who will manage the collaborative work of the RRCs; and

Note: Over the last two decades the RRCs received direct support (*e.g.,* workgroup facilitation and technology development support, *etc.*) from the OSEP-funded Federal Resource Center. In 2008 the FRC was recompeted as the Technical Assistance Coordination Center (TACC). TACC is a coordination hub where the OSEP-funded centers and other Federal agencies find resources, collaborate, and problem-solve in order to conduct their work without

duplicating efforts. RRCs will receive the same level of support from TACC as all the other centers; however, the direct support once provided by the FRC (*i.e.,* the coordination of activities with the small States consortium, coordination of cross-RRC workgroups, the planning and facilitation of monthly RRC meetings) will no longer be available to the RRCs.

(g) A line item in the proposed budget for an annual set-aside of five percent of the grant amount to support emerging needs that are consistent with the proposed RRCs' shared project activities, as those needs are identified in consultation with OSEP.

Note: With approval from the OSEP Project Officer, the RRC must reallocate any remaining funds from this annual set-aside no later than the end of the third quarter of each budget period.

Project Activities. To meet the requirements of this priority, each RRC must, at a minimum, conduct the following activities:

Knowledge Development Activities

Each RRC, in collaboration with the other five RRCs, must—

(a) During the first year of the project conduct a systematic review of the former RRCs and other OSEP-funded TA Centers, as appropriate, that—

(1) Analyzes existing data (*e.g.,* data on previously developed scopes of work, tools, products, and staffing) collected on the nature of the TA provided and its evidence base; and

(2) By the end of year one, produces a summary report regarding the most effective types of TA and the best practices for implementing effective TA in SEAs and LAs; and

(b) Conduct an annual review of—

(1) Part B and Part C SPPs and APRs to evaluate States' progress in meeting their targets in each of the priority areas under IDEA; and

(2) OSEP letters of determination and response tables, including letters of determination and response tables of States determined to be in ''needs assistance'' for two consecutive years and States determined to be in ''needs intervention'' for three consecutive years, in order to develop an action plan for supporting SEAs and LAs in their development of improvement and corrective action plans.

Technical Assistance and Dissemination Activities

Each RRC must—

(a) Collaborate and communicate on an ongoing basis with the other five RRCs, the other OSEP-funded TA&D Centers, and the other centers funded by the Department's Office of Elementary and Secondary Education (*e.g.,* The Regional Comprehensive Centers and the Equity Assistance Centers) to provide coordinated and research-based TA to SEAs and LAs;

(b) In collaboration with the other RRCs and OSEP-funded TA Centers, as appropriate—

(1) Develop action plans and activities based on OSEP-identified priorities, *i.e.,* all indicators found in the Part B and C SPPs. Action plans and activities may include items mentioned in activities (a), (b), and (c) under this section but are not limited to these activities;

(2) Develop TA tools and products related to SPP and APR requirements and evaluate the effectiveness of the implementation of these tools and products through annual assessments;

(3) Provide coordinated and research-based TA to SEAs and LAs to help them establish and implement strategies that address the four goals outlined in the ARRA and that are aligned with the indicators established under IDEA and other critical priorities related to improving outcomes for children with disabilities such as developing seamless, high-quality early childhood programs; scaling up successful models and strategies; and helping more students enter and complete college and get jobs; and

(4) Assist SEAs and LAs in refining and improving State policies, procedures, or both related to the Federal accountability requirements under IDEA; and

(c) Provide coordinated and research-based TA to SEAs and LAs to support them in meeting current IDEA requirements and OSEP initiatives for—

(1) Meeting APR reporting requirements (*e.g.,* data collection and analysis, and development, implementation, and evaluation of evidence-based improvement activities);

(2) Identifying improvement activities and, through annual assessments, determining if the newly identified activities are effective;

(3) Developing and implementing corrective action plans for LEAs and local providers, including implementation of enforcement actions for States in ''needs intervention'' for three consecutive years; and

(4) Improving general supervision at the SEA and LA level, including improving skills in fiscal management, policy development, practices and procedures, monitoring systems, and the timely correction of noncompliance with IDEA requirements.

Leadership and Coordination Activities

Each RRC, in collaboration with the other five RRCs, must do the following:

(a) Establish and maintain an advisory committee to review the activities and outcomes of the RRCs' collaborative work and provide programmatic support and advice throughout the project period. The committee must include, but is not limited to, SEA special education directors, Part C coordinators, directors of OESE-funded Regional Comprehensive Centers, and directors of OSEP-funded TA centers. The six RRCs must submit the names of proposed members of the advisory committee to OSEP for approval within eight weeks after receipt of the award. At a minimum, the advisory committee must meet on an annual basis either in Washington, DC, or by electronic means.

(b) Collaborate, on an ongoing basis, with OSEP-funded TA projects, especially those working on SPP indicators and general supervision. This collaboration must include the joint development of products, the coordination of TA services, and the planning and carrying out of TA meetings and events that are addressed in annual work plans.

(c) Participate in, organize, or facilitate, as directed by OSEP, communities of practice (*http://www.tacommunities.org*) that are aligned with the RRCs' objectives as a way to support discussions and collaboration among key stakeholders.

(d) Prior to developing any new product, whether paper or electronic, submit to the OSEP Project Officer and the Proposed Product Advisory Board at OSEP's TACC for approval, a proposal describing the content and purpose of the product.

(e) Maintain and upgrade the existing RRCs' Web site portal. (This portal can be found at *http://www.rrfcnetwork.org*). This Web site must continue to meet government or industry-recognized standards for accessibility and must link to the Web site operated by TACC.

(f) Contribute, on an ongoing basis, updated information on the RRCs' services to OSEP's TA&D Matrix (*http://matrix.rrfcnetwork.org*). The matrix provides current information on Department-funded TA services to a range of stakeholders.

(g) Coordinate with the National Dissemination Center for Individuals with Disabilities to develop an efficient and high-quality dissemination strategy that reaches broad audiences. The RRCs must report to the OSEP Project Officer the outcomes of these coordination efforts.

(h) Maintain ongoing communication with the OSEP Project Officer through monthly phone conversations, e-mail communication, and monthly reports.

Fourth and Fifth Years of the RRC

In deciding whether to continue funding the RRC for the fourth and fifth years, the Secretary will consider the requirements of 34 CFR 75.253(a), and in addition—

(a) The recommendation of a review team consisting of experts selected by the Secretary. This review will be conducted during a one-day intensive meeting in Washington, DC, that will be held during the last half of the second year of the project period;

(b) The timeliness and effectiveness with which all requirements of the negotiated cooperative agreement have been or are being met by the RRC; and

(c) The quality, relevance, and usefulness of the RRC's activities and products and the degree to which its activities and products have contributed to changed practice and improved State Parts B and C general supervision systems, SPPs, and APRs.

Waiver of Proposed Rulemaking: Under the Administrative Procedure Act (APA) (5 U.S.C. 553), the Department generally offers interested parties the opportunity to comment on proposed priorities and requirements. Section 681(d) of IDEA, however, makes the public comment requirements of the APA inapplicable to the priority in this notice.

Program Authority: 20 U.S.C. 1463 and 1481.

Applicable Regulations: The Education Department General Administrative Regulations (EDGAR) in 34 CFR parts 74, 75, 77, 79, 80, 81, 82, 84, 85, 86, 97, 98, and 99.

Note: The regulations in 34 CFR part 79 apply to all applicants except federally recognized Indian tribes.

Note: The regulations in 34 CFR part 86 apply to institutions of higher education (IHEs) only.

II. Award Information

Type of Award: Cooperative agreement.

Estimated Available Funds: $7,800,000.

Contingent upon the availability of funds and the quality of applications, we may make additional awards in FY 2010 from the list of unfunded applicants from this competition.

Estimated Average Size of Awards: $1,300,000.

Maximum Awards: We will reject any application that proposes a budget exceeding $1,300,000 for a single budget period of 12 months. The Assistant Secretary for Special Education and Rehabilitative Services may change the maximum amount through a notice published in the **Federal Register.**

Estimated Number of Awards: 6.

Note: The Department is not bound by any estimates in this notice.

Project Period: Up to 60 months.

III. Eligibility Information

1. *Eligible Applicants:* SEAs; LEAs, including public charter schools that are considered LEAs under State law; IHEs; other public agencies; private nonprofit organizations; outlying areas; freely associated States; Indian tribes or tribal organizations; and for-profit organizations.

2. *Cost Sharing or Matching:* This competition does not require cost sharing or matching.

3. *Other: General Requirements*—(a) The projects funded under this competition must make positive efforts to employ and advance in employment qualified individuals with disabilities (see section 606 of IDEA).

(b) Applicants and grant recipients funded under this competition must involve individuals with disabilities or parents of individuals with disabilities ages birth through 26 in planning, implementing, and evaluating the projects (see section 682(a)(1)(A) of IDEA).

IV. Application and Submission Information

1. *Address to Request Application Package:* Education Publications Center (ED Pubs), P.O. Box 1398, Jessup, MD 20794–1398. Telephone, toll free: 1–877–433–7827. FAX: (301) 470–1244. If you use a telecommunications device for the deaf (TDD), call, toll free: 1–877–576–7734.

You can contact ED Pubs at its Web site, also: *http://www.ed.gov/pubs/edpubs.html* or at its e-mail address: *edpubs@inet.ed.gov.*

If you request an application package from ED Pubs, be sure to identify this program or competition as follows: CFDA number 84.326R.

Individuals with disabilities can obtain a copy of the application package in an accessible format (*e.g.,* braille, large print, audiotape, or computer diskette) by contacting the person or team listed under *Accessible Format* in section VIII of this notice.

2. *Content and Form of Application Submission:* Requirements concerning the content of an application, together with the forms you must submit, are in the application package for this competition. *Page Limit:* The application narrative (Part III of the application) is where you, the applicant, address the selection criteria that reviewers use to evaluate your application. You must limit the application narrative to the equivalent of no more than 70 pages, using the following standards:

- A ''page'' is 8.5″ x 11″, on one side only, with 1″ margins at the top, bottom, and both sides.
- Double space (no more than three lines per vertical inch) all text in the application narrative, including titles, headings, footnotes, quotations, references, and captions, as well as all text in charts, tables, figures, and graphs.
- Use a font that is either 12 point or larger or no smaller than 10 pitch (characters per inch).

The page limit does not apply to Part I, the cover sheet; Part II, the budget section, including the narrative budget justification; Part IV, the assurances and certifications; or the one-page abstract, the resumes, the bibliography, the references, or the letters of support. However, the page limit does apply to the application narrative in Part III.

We will reject your application if you exceed the page limit or if you apply other standards and exceed the equivalent of the page limit.

3. *Submission Dates and Times:* Applications Available: July 10, 2009. Deadline for Transmittal of Applications: August 10, 2009.

Applications for grants under this competition may be submitted electronically using the Electronic Grant Application System (e-Application) accessible through the Department's e-Grants site, or in paper format by mail or hand delivery. For information (including dates and times) about how to submit your application electronically, or in paper format by mail or hand delivery, please refer to section IV. 6. *Other Submission Requirements* of this notice.

We do not consider an application that does not comply with the deadline requirements.

Individuals with disabilities who need an accommodation or auxiliary aid in connection with the application process should contact the person listed under *For Further Information Contact* in section VII of this notice. If the Department provides an accommodation or auxiliary aid to an individual with a disability in connection with the application process, the individual's application remains subject to all other requirements and limitations in this notice. Deadline for Intergovernmental Review: August 19, 2009.

4. *Intergovernmental Review:* This competition is subject to Executive Order 12372 and the regulations in 34 CFR part 79. Information about Intergovernmental Review of Federal Programs under Executive Order 12372

is in the application package for this competition.

5. *Funding Restrictions:* We reference regulations outlining funding restrictions in the *Applicable Regulations* section of this notice.

6. *Other Submission Requirements:* Applications for grants under this competition may be submitted electronically or in paper format by mail or hand delivery.

a. Electronic Submission of Applications

If you choose to submit your application to us electronically, you must use e-Application, accessible through the Department's e-Grants Web site at: *http://e-grants.ed.gov.*

While completing your electronic application, you will be entering data online that will be saved into a database. You may not e-mail an electronic copy of a grant application to us.

Please note the following:

- Your participation in e-Application is voluntary.
- You must complete the electronic submission of your grant application by 4:30:00 p.m., Washington, DC time, on the application deadline date. E-Application will not accept an application for this competition after 4:30:00 p.m., Washington, DC time, on the application deadline date. Therefore, we strongly recommend that you do not wait until the application deadline date to begin the application process.
- The hours of operation of the e-Grants Web site are 6:00 a.m. Monday until 7:00 p.m. Wednesday; and 6:00 a.m. Thursday until 8:00 p.m. Sunday, Washington, DC time. Please note that, because of maintenance, the system is unavailable between 8:00 p.m. on Sundays and 6:00 a.m. on Mondays, and between 7:00 p.m. on Wednesdays and 6:00 a.m. on Thursdays, Washington, DC time. Any modifications to these hours are posted on the e-Grants Web site.
- You will not receive additional point value because you submit your application in electronic format, nor will we penalize you if you submit your application in paper format.
- You must submit all documents electronically, including all information you typically provide on the following forms: the Application for Federal Assistance (SF 424), the Department of Education Supplemental Information for SF 424, Budget Information—Non-Construction Programs (ED 524), and all necessary assurances and certifications. You must attach any narrative sections of your application as files in a .DOC (document), .RTF (rich text), or .PDF (Portable Document) format. If you upload a file type other than the three file types specified in this paragraph or submit a password protected file, we will not review that material.
- Your electronic application must comply with any page limit requirements described in this notice.
- Prior to submitting your electronic application, you may wish to print a copy of it for your records.
- After you electronically submit your application, you will receive an automatic acknowledgment that will include a PR/Award number (an identifying number unique to your application).
- Within three working days after submitting your electronic application, fax a signed copy of the SF 424 to the Application Control Center after following these steps:

(1) Print SF 424 from e-Application.

(2) The applicant's Authorizing Representative must sign this form.

(3) Place the PR/Award number in the upper right hand corner of the hard-copy signature page of the SF 424.

(4) Fax the signed SF 424 to the Application Control Center at (202) 245–6272.

- We may request that you provide us original signatures on other forms at a later date.

Application Deadline Date Extension in Case of System Unavailability: If you are prevented from electronically submitting your application on the application deadline date because e-Application is unavailable, we will grant you an extension of one business day to enable you to transmit your application electronically, by mail, or by hand delivery. We will grant this extension if—

(1) You are a registered user of e-Application and you have initiated an electronic application for this competition; and

(2) (a) E-Application is unavailable for 60 minutes or more between the hours of 8:30 a.m. and 3:30 p.m., Washington, DC time, on the application deadline date; or

(b) E-Application is unavailable for any period of time between 3:30 p.m. and 4:30:00 p.m., Washington, DC time, on the application deadline date.

We must acknowledge and confirm these periods of unavailability before granting you an extension. To request this extension or to confirm our acknowledgment of any system unavailability, you may contact either (1) the person listed elsewhere in this notice under **FOR FURTHER INFORMATION CONTACT** (see VII. Agency Contact) or (2) the e-Grants help desk at 1–888–336–8930. If e-Application is unavailable due to technical problems with the system and, therefore, the application deadline is extended, an e-mail will be sent to all registered users who have initiated an e-Application.

Extensions referred to in this section apply only to the unavailability of e-Application. If e-Application is available, and, for any reason, you are unable to submit your application electronically or you do not receive an automatic acknowledgment of your submission, you may submit your application in paper format by mail or hand delivery in accordance with the instructions in this notice.

b. Submission of Paper Applications by Mail

If you submit your application in paper format by mail (through the U.S. Postal Service or a commercial carrier), you must mail the original and two copies of your application, on or before the application deadline date, to the Department at the following address: U.S. Department of Education, Application Control Center, Attention: (CFDA Number 84.326R), LBJ Basement Level 1, 400 Maryland Avenue, SW., Washington, DC 20202–4260.

You must show proof of mailing consisting of one of the following:

(1) A legibly dated U.S. Postal Service postmark.

(2) A legible mail receipt with the date of mailing stamped by the U.S. Postal Service.

(3) A dated shipping label, invoice, or receipt from a commercial carrier.

(4) Any other proof of mailing acceptable to the Secretary of the U.S. Department of Education.

If you mail your application through the U.S. Postal Service, we do not accept either of the following as proof of mailing:

(1) A private metered postmark.

(2) A mail receipt that is not dated by the U.S. Postal Service.

If your application is postmarked after the application deadline date, we will not consider your application.

Note: The U.S. Postal Service does not uniformly provide a dated postmark. Before relying on this method, you should check with your local post office.

c. Submission of Paper Applications by Hand Delivery

If you submit your application in paper format by hand delivery, you (or a courier service) must deliver the original and two copies of your application by hand, on or before the application deadline date, to the Department at the following address:

U.S. Department of Education, Application Control Center, Attention: (CFDA Number 84.326R), 550 12th Street, SW., Room 7041, Potomac Center Plaza, Washington, DC 20202–4260.

The Application Control Center accepts hand deliveries daily between 8:00 a.m. and 4:30:00 p.m., Washington, DC time, except Saturdays, Sundays, and Federal holidays.

Note for Mail or Hand Delivery of Paper Applications: If you mail or hand deliver your application to the Department—

(1) You must indicate on the envelope and—if not provided by the Department—in Item 11 of the SF 424 the CFDA number, including suffix letter, if any, of the competition under which you are submitting your application; and

(2) The Application Control Center will mail to you a notification of receipt of your grant application. If you do not receive this grant notification within 15 business days from the application deadline date, you should call the U.S. Department of Education Application Control Center at (202) 245–6288.

V. Application Review Information

1. *Selection Criteria:* The selection criteria for this competition are from 34 CFR 75.210 and are listed in the application package.

2. *Peer Review:* In the past, the Department has had difficulty finding peer reviewers for certain competitions because so many individuals who are eligible to serve as peer reviewers have conflicts of interest. The Standing Panel requirements under IDEA also have placed additional constraints on the availability of reviewers. Therefore, the Department has determined that, for some discretionary grant competitions, applications may be separated into two or more groups and ranked and selected for funding within the specific groups. This procedure will make it easier for the Department to find peer reviewers by ensuring that greater numbers of individuals who are eligible to serve as reviewers for any particular group of applicants will not have conflicts of interest. It also will increase the quality, independence, and fairness of the review process while permitting panel members to review applications under discretionary grant competitions for which they also have submitted applications. However, if the Department decides to select an equal number of applications in each group for funding, this may result in different cut-off points for fundable applications in each group.

VI. Award Administration Information

1. *Award Notices:* If your application is successful, we notify your U.S. Representative and U.S. Senators and send you a Grant Award Notification (GAN). We may notify you informally, also.

If your application is not evaluated or not selected for funding, we notify you.

2. *Administrative and National Policy Requirements:* We identify administrative and national policy requirements in the application package and reference these and other requirements in the *Applicable Regulations* section of this notice.

We reference the regulations outlining the terms and conditions of an award in the *Applicable Regulations* section of this notice and include these and other specific conditions in the GAN. The GAN also incorporates your approved application as part of your binding commitments under the grant.

3. *Reporting:* At the end of your project period, you must submit a final performance report, including financial information, as directed by the Secretary. If you receive a multi-year award, you must submit an annual performance report that provides the most current performance and financial expenditure information as directed by the Secretary under 34 CFR 75.118. The Secretary may also require more frequent performance reports under 34 CFR 75.720(c). For specific requirements on reporting, please go to *http://www.ed.gov/fund/grant/apply/appforms/appforms.html.*

4. *Performance Measures:* Under the Government Performance and Results Act of 1993 (GPRA), the Department has established a set of performance measures, including long-term measures, that are designed to yield information on various aspects of the effectiveness and quality of the Technical Assistance and Dissemination to Improve Services and Results for Children With Disabilities program. These measures focus on the extent to which projects provide high-quality products and services, the relevance of project products and services to educational and early intervention policy and practice, and the use of products and services to improve educational and early intervention policy and practice.

Grantees will be required to report information on their project's performance in annual reports to the Department (34 CFR 75.590).

VII. Agency Contact

For Further Information Contact: Rex Shipp, U.S. Department of Education, 400 Maryland Avenue, SW., Room 4178, Potomac Center Plaza (PCP), Washington, DC 20202–2550. Telephone: (202) 245–7523.

If you use a TDD, call the Federal Relay Service (FRS), toll free, at 1–800–877–8339.

VIII. Other Information

Accessible Format: Individuals with disabilities can obtain this document and a copy of the application package in an accessible format (*e.g.,* Braille, large print, audiotape, or computer diskette) by contacting the Grants and Contracts Services Team, U.S. Department of Education, 400 Maryland Avenue, SW., Room 5075, PCP, Washington, DC 20202–2550. Telephone: (202) 245–7363. If you use a TDD, call the FRS, toll free, at 1–800–877–8339.

Electronic Access to This Document: You can view this document, as well as all other documents of this Department published in the **Federal Register**, in text or Adobe Portable Document Format (PDF) on the Internet at the following site: *http://www.ed.gov/news/fedregister.*

To use PDF you must have Adobe Acrobat Reader, which is available free at this site. If you have questions about using PDF, call the U.S. Government Printing Office (GPO), toll free, at 1–888–293–6498; or in the Washington, DC, area at (202) 512–1530.

Note: The official version of this document is the document published in the **Federal Register**. Free Internet access to the official edition of the **Federal Register** and the Code of Federal Regulations is available on GPO Access at: *http://www.gpoaccess.gov/nara/index.html.*

Delegation of Authority: The Secretary of Education has delegated authority to Andrew J. Pepin, Executive Administrator for Special Education and Rehabilitative Services to perform the functions of the Assistant Secretary for Special Education and Rehabilitative Services.

Dated: July 6, 2009.

Andrew J. Pepin,

Executive Administrator for Special Education and Rehabilitative Services.

[FR Doc. E9–16385 Filed 7–9–09; 8:45 am]

BILLING CODE 4000–01–P

DEPARTMENT OF ENERGY

Advanced Scientific Computing Advisory Committee

AGENCY: Department of Energy, Office of Science.

ACTION: Notice of open meeting.

SUMMARY: This notice announces a meeting of the Advanced Scientific Computing Advisory Committee (ASCAC). Federal Advisory Committee Act (Pub. L. 92–463, 86 Stat. 770) requires that public notice of these meetings be announced in the **Federal Register**.

DATES: Tuesday, August 11, 2009, 9 a.m. to 5 p.m.; Wednesday, August 12, 2009, 9 a.m. to 12 p.m.

ADDRESSES: American Geophysical Union, (AGU), 2000 Florida Avenue, NW., Washington, DC 20009–1277.

FOR FURTHER INFORMATION CONTACT: Melea Baker, Office of Advanced Scientific Computing Research, SC–21/Germantown Building, U.S. Department of Energy, 1000 Independence Avenue, SW., Washington, DC 20585–1290; Telephone (301)–903–7486, (*E-mail: Melea.Baker@science.doe.gov*).

SUPPLEMENTARY INFORMATION:

Purpose of the Meeting: The purpose of this meeting is to provide advice and guidance with respect to the advanced scientific computing research program.

Tentative Agenda: Agenda will include discussions of the following:

Tuesday, August 11, 2009

View from Washington,
Office of Science Update,
ASCR Update,
Computing at the National Science Foundation,
Computational Research Needs in Alternative and Renewable Energy,
SciDAC Update,
Potential Impact of High-end Capability Computing on Four Illustrative Fields of Science and Engineering,
ASCR Recovery Act projects,
Public Comment.

Wednesday, August 12, 2009

ASCAC Committee of Visitors Update,
Challenges in Climate Change Science and the Role of Computing at the Extreme Scale,
Petascale Science Results,
Public Comment.

Public Participation: The meeting is open to the public. If you would like to file a written statement with the Committee, you may do so either before or after the meeting. If you would like to make oral statements regarding any of the items on the agenda, you should contact Melea Baker via FAX at 301–903–4846 or via e-mail (*Melea.Baker@science.doe.gov*). You must make your request for an oral statement at least 5 business days prior to the meeting. Reasonable provision will be made to include the scheduled oral statements on the agenda. The Chairperson of the Committee will conduct the meeting to facilitate the orderly conduct of business. Public comment will follow the 10-minute rule.

Minutes: The minutes of this meeting will be available for public review and copying within 30 days at the Freedom of Information Public Reading Room, 1E–190, Forrestal Building, 1000 Independence Avenue, SW., Washington, DC 20585, between 9 a.m. and 4 p.m., Monday through Friday, except holidays.

Issued in Washington, DC, on July 1, 2009.

Rachel Samuel,

Deputy Committee Management Officer.

[FR Doc. E9–16208 Filed 7–9–09; 8:45 am]

BILLING CODE 6450–01–P

DEPARTMENT OF ENERGY

National Nuclear Security Administration

Record of Decision: Site-Wide Environmental Impact Statement for the Continued Operation of Los Alamos National Laboratory, Los Alamos, NM

AGENCY: National Nuclear Security Administration, U.S. Department of Energy.

ACTION: Record of decision.

SUMMARY: The National Nuclear Security Administration (NNSA), a separately organized agency within the U.S. Department of Energy (DOE), is issuing this Record of Decision (ROD) for the continued operation of the Los Alamos National Laboratory (LANL) in Los Alamos, New Mexico, pursuant to the *Final Site-Wide Environmental Impact Statement for the Continued Operation of Los Alamos National Laboratory, Los Alamos, New Mexico,* DOE/EIS–0380 (SWEIS) (73 FR 28453, May 16, 2008). This ROD is the second ROD based on the information and analyses contained in the SWEIS and other factors, including comments received on the SWEIS, costs, technical and security considerations, and the missions of NNSA. These decision factors also include results from the analyses in the October 24, 2008, *Final Complex Transformation Supplemental Programmatic Environmental Impact Statement* (DOE/EIS–0236–S4, 73 FR 63460) (Complex Transformation SPEIS) and its two RODs (73 FR 77644, 73 FR 77656, December 19, 2008). NNSA issued the first ROD for the continued operation of LANL based on the SWEIS (73 FR 55833) on September 26, 2008.

In the LANL SWEIS, NNSA analyzed three alternatives for the continued operation of LANL: (1) No Action, (2) Reduced Operations, and (3) Expanded Operations. NNSA identified the Expanded Operations Alternative as its Preferred Alternative.

For this second ROD, NNSA continues to select the No Action Alternative, announced in the 2008 ROD as its decision for continuing the operation of LANL, and has decided to implement additional elements of the Expanded Operations Alternative. Specific projects that will be implemented under this ROD are: (1) Complete the environmental remediation and closure of Technical Area 18 (TA–18) Pajarito Site; (2) complete the environmental remediation and closure of TA–21 (also referred to as the Delta Prime or DP Site); (3) refurbish the Plutonium Facility Complex at TA–55; (4) construct and operate a new Radioactive Liquid Waste Treatment Facility in TA–50 and operate a zero liquid discharge facility in TA–52 as an auxiliary action; (5) install additional processors and equipment to further expand the capabilities and operation level of the Nicholas C. Metropolis Center for Modeling and Simulation in TA–3; and (6) construct and operate a new Science and Engineering Complex at TA–62. These projects and the changes in operations associated with them are needed to support DOE and NNSA missions; to maintain and improve the safety and security of existing capabilities at LANL; and to further LANL intra-site facility consolidation. Decisions that NNSA is announcing in this ROD will not change the plutonium pit production throughput capability at LANL (20 plutonium pits per year), nor will they influence or be impacted by future decisions that may be made based on the upcoming Nuclear Posture Review.[1]

FOR FURTHER INFORMATION CONTACT: For copies of the SWEIS, the 2008 SWEIS ROD or this ROD, or to receive further information about other issues regarding the Los Alamos Site Office's National Environmental Policy Act (NEPA) compliance program, contact: Mr. George J. Rael, Assistant Manager Environmental Operations, NEPA Compliance Officer, U.S. Department of Energy, National Nuclear Security Administration, Los Alamos Site Office, 3747 West Jemez Road, Los Alamos, NM

[1] The Nuclear Posture Review is a congressionally mandated comprehensive review of U.S. nuclear deterrence policy and strategy that the Secretary of Defense will conduct in consultation with the Secretary of Energy and the Secretary of State. The requirement for this review can be found in the National Defense Appropriations Act for 2008, Public Law 110–181.

87544. Mr. Rael may be contacted by telephone at (505) 665–5658, or by e-mail at LASO.SWEIS@doeal.gov. For information on the DOE NEPA process, contact: Ms. Carol M. Borgstrom, Director, Office of NEPA Policy and Compliance (GC–20), U.S. Department of Energy, 1000 Independence Avenue, SW., Washington, DC 20585, (202) 586–4600, or leave a message at (800) 472–2756. Additional information regarding DOE NEPA activities and access to many DOE NEPA documents, including those referenced in this ROD, are available on the Internet through the DOE NEPA Web site at *http://www.gc.energy.gov/nepa/.*

SUPPLEMENTARY INFORMATION:

Background

NNSA prepared this ROD pursuant to the regulations of the Council on Environmental Quality (CEQ) for implementing NEPA (40 CFR parts 1500–1508) and DOE's NEPA Implementing Procedures (10 CFR part 1021). Decisions presented in this second ROD are based on information and analysis contained in the SWEIS (including a classified appendix that assesses the potential environmental impacts of a representative set of credible intentional destructive acts that include terrorism scenarios) (73 FR 28453, May 16, 2008), comments received on the Final SWEIS; NNSA's two December 19, 2008, RODs resulting from information and analysis contained in the Complex Transformation SPEIS (73 FR 77644, 73 FR 77656); and other factors, including costs, technical and security considerations, and the missions of NNSA.

LANL is a multidisciplinary, multipurpose research institution in north-central New Mexico, about 60 miles (97 kilometers) north-northeast of Albuquerque, and about 25 miles (40 kilometers) northwest of Santa Fe. LANL occupies about 25,600 acres (10,360 hectares), or approximately 40 square miles (104 square kilometers). About 2,000 structures with approximately 8.6 million square feet under roof serve to house LANL operations and activities, with about half the square footage used as laboratory or production space, and the remaining half used for administrative, storage, service, and other purposes.

LANL is one of three national security laboratories within NNSA's Nuclear Security Enterprise. The main role of LANL in the fulfillment of NNSA and DOE missions is scientific and technological work that supports nuclear materials handling and processing, and weapons component fabrication; stockpile management; materials and manufacturing technologies; nonproliferation programs; and waste management activities. LANL plays a key role in providing stewardship for the nation's nuclear stockpile that includes manufacturing some nuclear weapons components, such as plutonium pits. In addition to weapons component manufacturing, LANL performs weapons component testing, stockpile assurance, component replacement, surveillance, and maintenance. Research and development activities at LANL include high explosives processing, chemical research, nuclear physics research, materials science research, systems analysis and engineering, human genome mapping, biotechnology applications, and remote sensing technologies. Work at LANL is also conducted for other Federal agencies such as the Departments of Defense and Homeland Security, as well as for universities, institutions, and private entities.

The alternatives evaluated in the SWEIS span a range of potential operations from minimum levels that would maintain essential mission support capabilities (Reduced Operations Alternative), through the highest reasonably foreseeable levels that could be supported by current facilities or new facilities (Expanded Operations Alternative). The No Action Alternative analyzed in the SWEIS is essentially a continuation of current operations based on previous NEPA analyses and decisions, including the 1999 LANL SWEIS (DOE/EIS–0238, January 1999) and its ROD (64 FR 50797, September 20, 1999). The Reduced Operations and Expanded Operations Alternatives analyzed in the SWEIS are reductions or expansions of the level of operations for the No Action Alternative. As a matter of convenience, actions associated with implementing the March 2005 LANL Compliance Order on Consent (Consent Order) with the State of New Mexico [2] are only analyzed in the Expanded Operations Alternative. However, NNSA stated in the SWEIS that DOE intends to implement actions necessary to comply with the Consent Order, regardless of decisions it makes on other actions analyzed in the LANL SWEIS.

The 2008 SWEIS ROD announced NNSA's decision to continue to implement the No Action Alternative with certain elements of the Expanded Operations Alternative. These specific elements were: (1) Continuing to implement actions necessary to comply with the Consent Order, which requires investigation and remediation of environmental contamination at LANL; (2) broadening the types and quantities of radioactive sealed sources for isotopes of Cobalt, Iridium, Californium and Radium, (Co-60, Ir-192, Cf-252, Ra-226), that LANL will manage and store prior to disposal; (3) expanding the capabilities and operational level of the Nicholas C. Metropolis Center for Modeling and Simulation to support the Roadrunner super computing platform; (4) performing research regarding beryllium detection and mitigation measures; (5) retrieving and disposing of about 3,100 cubic yards of contact-handled and 130 cubic yards of remote-handled legacy transuranic (TRU) waste from below-ground storage; (6) planning, design, construction, and operation of the Waste Management Facilities Transition projects to facilitate actions required by the Consent Order; (7) repairing and replacing mission critical cooling system components for buildings in Technical Area–55 (TA–55); and (8) completing final design of a new Radioactive Liquid Waste Treatment Facility, and designing and constructing the zero liquid discharge facility auxiliary component of the new treatment facility.

NNSA has previously announced its determination that the Expanded Operations Alternative is both its Preferred Alternative and the Environmentally Preferred Alternative. Considering the many aspects of the alternatives analyzed in the SWEIS, and looking out over the long term, NNSA believes that the implementation of changes analyzed in the Expanded Operations Alternative would allow it to best achieve both its mission and environmental responsibilities. Under this alternative, NNSA would be better positioned to minimize the use of electricity and water; streamline operations through consolidation; replace older laboratory and production facilities with new buildings that incorporate modern safety, security, and energy efficiency standards improving NNSA's ability to protect human health; reduce the ''footprint'' of LANL as a whole; and allow some areas to return to a natural state.

NNSA published as Volume 3 of the SWEIS all comments received on the

[2] The March 2005 LANL Compliance Order on Consent was issued pursuant to the New Mexico Hazardous Waste Act and entered into by the State of New Mexico, the Department of Energy and its Management and Operating Contractor to address requirements concerning certain groundwater contaminants toxic pollutants and explosive compounds. The Consent Order may be viewed at *http://www.lanl.gov/environment/compliance/consent_order.shtml.*

Draft SWEIS together with NNSA's responses, and discussions of how comments resulted in changes to the document. The 2008 SWEIS ROD included a detailed discussion of the comments received on the Final SWEIS, and will not be repeated here. In response to the concern raised by several of the commenters that proceeding with an increase in plutonium pit production at this time would be premature, NNSA agrees that making decisions at this time on future plutonium pit production levels is premature, and will delay making any decisions in this area until after the completion of the upcoming Nuclear Posture Review. Decisions that NNSA is announcing in this ROD will not change the 20 plutonium pits per year level of plutonium pit production throughput capability established in the 1999 LANL SWEIS ROD.

On December 19, 2008, NNSA issued two RODs based in part on the Complex Transformation SPEIS for the continued transformation of the nuclear weapons complex. One ROD addressed the implementation of programmatic alternatives involving plutonium, uranium, and the assembly and disassembly of nuclear weapons (73 FR 77644). The other announced the implementation of project-specific alternatives involving tritium research and development, flight test operations, and major environmental test facilities (73 FR 77656). NNSA's programmatic decision to retain and consolidate plutonium pit manufacturing and research and development work at LANL means that special nuclear materials and work performed with plutonium will be consolidated from some of the other NNSA sites to LANL. This decision supports the transformation of the nuclear weapons complex into a smaller, more efficient nuclear security enterprise that can respond to changing national security challenges and ensure the long-term safety, security, and reliability of the nuclear weapons stockpile. Two of NNSA's project-specific decisions also directly affect LANL operations: (1) The consolidation of tritium research and operations at the Savannah River Site, which reduces tritium operations at LANL; and (2) the consolidation of major environmental test facilities at Sandia National Laboratories/New Mexico, which closes four facilities at LANL.

Basis for Decision

In this second ROD, NNSA is announcing its decision to continue to implement the No Action Alternative with the addition of elements from the Expanded Operations Alternative of the SWEIS. NNSA has also decided that it will now implement additional elements from the Expanded Operations Alternative that complement the actions taken under the 2008 SWEIS ROD. These additional elements collectively include increases in the operation of some existing facilities and the implementation of a limited number of additional new facility projects needed to support ongoing stockpile stewardship and environmental closure and remediation programs; to enhance nuclear safety and security; and to provide modern features for the protection of workers and the environment. NNSA will continue to undertake intra-site consolidation of operations and activities to reduce the physical ''footprint'' of LANL and improve efficiency and address the LANL Land Transfer requirements of Public Law 105–119. NNSA also will continue to coordinate with the DOE's Office of Environmental Management to execute environmental closure and remediation actions including major material disposal area (MDA) remediation, canyon cleanups and all activities necessary to meet Consent Order requirements, the LANL Federal Facility Compliance Agreement, and DOE commitments regarding the use of resources provided through the American Recovery and Reinvestment Act of 2009 (ARRA) (Pub. L. 111–5).

Environmental Impacts Associated With Decisions

In making the decisions announced in this ROD, NNSA considered the potential impacts for normal operations (those operations without accidents or intentional destructive acts) as well as impacts analyzed in the SWEIS from potential accidents and intentional destructive acts, including credible terrorism scenarios, on workers and surrounding populations, as it did in developing the 2008 ROD. NNSA also evaluated the potential impacts associated with the irreversible or irretrievable commitments of resources, and the relationship between short-term uses of the environment and the maintenance and enhancement of long-term productivity. These analyses and results are described in the Summary and Chapters 4 and 5 of the SWEIS. Additional project specific analyses are included in the Appendices to the SWEIS.

Decisions

Operations at LANL provide a wide range of scientific and technological capabilities for NNSA's National Nuclear Security Enterprise (Nuclear Weapons Complex). NNSA's decisions are based on its current and anticipated mission responsibilities and its need to continue to operate LANL in a manner that allows NNSA to efficiently and effectively fulfill its mission responsibilities in an environmentally protective and fiscally prudent manner. The need for the decisions identified in this ROD exists regardless of any future decisions that may be made about the level of plutonium pit production at LANL. National security policies and related laws require NNSA to maintain the Nation's nuclear weapons stockpile, as well as its core competencies in nuclear weapons. The nuclear facilities at LANL are essential to NNSA's ability to execute this core program and to support NNSA's aggressive and far-reaching nuclear non-proliferation efforts. The changes in operations and new projects announced in this ROD are needed to fulfill NNSA and DOE mission responsibilities and meet various requirements that have arisen since 1999, and are consistent with recent decisions regarding the nuclear weapons complex transformation.

Consistent with the decisions announced in the first ROD under the SWEIS, NNSA and DOE's Office of Environmental Management will continue to implement actions required by the March 2005 Consent Order along with other activities needed for environmental cleanup at LANL:

(1) Analytical chemistry sample processing, waste management activities such as waste characterization operations and waste processing, storage and transportation actions, as well as waste disposal at appropriate waste disposal facilities located both on-site and off-site; (2) the clearing of site vegetation; (3) decontamination, decommissioning and demolition (DD&D) of structures and buildings with priority to those that must be removed to reach buried contamination; (4) exhumation of buried contamination; (5) exhumation and transportation of soil and rock from on-site borrow pits; (6) construction of roads to reach sites with heavy equipment, lay-down areas for equipment and materials and waste storage and staging, and parking sites to meet the needs of vehicles involved in transporting wastes, equipment and materials; and (7) delineation and fencing of clean-up sites.

Environmental cleanup projects that will be undertaken and completed under this ROD include:

- Completing the remediation and closure of TA–18 Pajarito Site. This would include relocating remaining operations to existing facilities within LANL, performing the DD&D of existing

site structures and completing remediation of the TA–18 canyon-bottom site.

• Completing the remediation and closure of TA–21 Delta Prime (DP) Site with an emphasis on DD&D and environmental remediation of MDAs. This would include the DD&D of the TA–21 buildings. Those structures that cover or could interfere with activities to investigate and remediate MDAs and other potential release sites under the Consent Order would be given priority. Both DP West and DP East facilities will undergo DD&D and thorough characterization, decontamination, and demolition, with waste disposal dependent on facility characterization information. The underlying waste sites can then be properly investigated, considered for corrective actions that may be required under the Consent Order and remediated as appropriate.

The NNSA has also decided to implement the additional projects specified in this ROD that involve the design, construction and operation of new replacement buildings, and the renovation of certain existing facilities. This decision includes the implementation of all associated actions needed to facilitate construction or renovation projects, including those related to the transfer of operations, and those necessary for the DD&D of spaces vacated by moving existing facilities. These projects are part of the vision that NNSA has established for the future Nuclear Security Enterprise.

NNSA's vision for the future remains a smaller, safer, more secure and less expensive enterprise that leverages the scientific and technical capabilities of its workforce to meet all our national security requirements. The specific projects that NNSA has decided to implement are:

• Refurbish the Plutonium Facility Complex (PF–4) at TA–55: This refurbishment project consists of seven subprojects that either replace or upgrade obsolete and/or worn-out facility components/safety systems or address regulatory-driven requirements at the PF–4 building in TA–55. Replacement and maintenance of critical infrastructure and safety systems is necessary to ensure the reliability of this facility and compliance with safety and regulatory requirements.

• Construct and operate a new Radioactive Liquid Waste Treatment Facility, (RLWTF), at TA–50 together with the operation of a zero liquid discharge facility at TA–52 as an auxiliary action: These actions replace/restore an existing capability at LANL for processing radioactive liquid wastes. The existing RLWTF at TA–50 is the only facility available at LANL to treat a broad range of transuranic and low-level radioactive liquid wastes. It is an aging facility (over 40 years old) that has exceeded its design life.

• Install additional processors and equipment as necessary to further expand the capabilities and operation level of the Nicholas C. Metropolis Center for Modeling and Simulation at TA–3: These actions will be undertaken to support future operations up to the level of operations analyzed in the SWEIS as attainable through the consumption of a maximum electric power use of 15 megawatts, and a maximum potable water use of 51 million gallons per year. Calculations performed at the Nicholas C. Metropolis Center support the continued certification of the nuclear weapons stockpile without conducting underground nuclear tests, and also support research on global energy challenges and other scientific issues.

• Construct and operate a new Science and Engineering Complex at TA–62 (analyzed as the Science Complex Option 1 in Appendix G of the SWEIS): This action consolidates offices and light laboratories currently located in several outmoded structures at LANL into a new, state-of-the-art facility of approximately 400,000 gsf. It would support scientific research activities in both basic and applied sciences. Execution of this project would be accompanied by DD&D of excess structures at LANL.

The NNSA will implement changes to operational levels at existing facilities and install new infrastructure analyzed as part of the Expanded Operations Alternative that support decisions announced in this ROD, the 2008 SWEIS ROD and the two SPEIS RODs. The changes to on-going operational levels at existing facilities (and their replacement facilities) include: (1) Changes and increases to the capabilities for waste storage, characterization, packaging, and labeling at solid and liquid radioactive waste and chemical waste management and treatment facilities to support the processing and disposition of transuranic, low-level and mixed low-level radioactive waste, and chemical waste from site DD&D activities; and (2) the performance of site assessments, soil remediation, and the enhancement of field capabilities to support of environmental remediation and risk mitigation at LANL.

Mitigation Measures

As described in the SWEIS, NNSA and LANL operate pursuant to a number of Federal laws including environmental laws, DOE Orders, and Federal, State, and local controls, and agreements. Many of these mandate actions that serve to mitigate potential adverse environmental impacts. A Los Alamos Mitigation Action Plan (MAP) for the SWEIS RODs has been issued and will be reviewed and updated as necessary to implement this ROD. As discussed in the 2008 ROD, this MAP contains a summary of all commitments for LANL that are either underway or will be initiated. These commitments include such actions as continued forest management efforts, trail management efforts, and implementation of a variety of site sampling and monitoring measures, as well as additional measures to reduce potable water use and pollutant emissions and implement resource conservation initiatives.

In addition, with respect to concerns raised by the Santa Clara Pueblo, as discussed in the 2008 ROD, NNSA will continue its efforts to support the Pueblo and other tribal entities in matters of human health and will participate in various intergovernmental efforts to protect indigenous practices and locations of concern. NNSA will conduct government-to-government consultations with the Pueblo and other tribal entities to incorporate these matters into the MAP.

Issued at Washington, DC, this 29 day of June 2009.

Thomas P. D'Agostino,

Administrator, National Nuclear Security Administration.

[FR Doc. E9–16343 Filed 7–9–09; 8:45 am]

BILLING CODE 6450–01–P

ENVIRONMENTAL PROTECTION AGENCY

[ER–FRL–8595–2]

Environmental Impacts Statements; Notice of Availability

Responsible Agency: Office of Federal Activities, General Information (202) 564–1399 or *http://www.epa.gov/compliance/nepa/*.

Weekly receipt of Environmental Impact Statements

Filed 06/29/2009 Through 07/03/2009

Pursuant to 40 CFR 1506.9.

EIS No. 20090222, Draft EIS, AFS, NM, Rinconada Communication Site, Designation of Site to Serve Present and Future High Power Communication Needs and to Permit the Development of a Radio Transmission Facility within Site, Mt. Taylor Ranger District, Cibola National Forest, Cibola County, NM,

Comment Period Ends: 08/24/2009, Contact: Keith Baker 505–346–3820.

EIS No. 20090223, Draft EIS, AFS, NV, Jarbridge Ranger District Rangeland Management Project, Proposed Reauthorizing Grazing on 21 Existing Grazing Allotments, Humboldt Toiyabe National Forest, Elko County, NV, Comment Period Ends: 08/24/2009, Contact: Vern Keller 775–355–5356.

EIS No. 20090224, Final EIS, AFS, SD, Telegraph Project Area, Proposes to Implement Multiple Resource Management Actions, Northern Hills Ranger District, Black Hills National Forest, Lawrence and Pennington Counties, SD, Wait Period Ends: 08/10/2009, Contact: Chris Stores 605–642–4622

EIS No. 20090225, Draft EIS, AFS, ND, North Billings County Allotment Management Plan Revisions, Proposes to Continue to Permit Livestock Grazing on 43 Allotments, Medora Ranger District, Dakota Prairie Grasslands, Billings County, ND, Comment Period Ends: 08/24/2009, Contact: Jeff Adams 701–227–7800.

EIS No. 20090226, Draft EIS, FHW, CA, 6th Street Viaduct Seismic Improvement Project, Retrofitting or Demolition and Replacement of the Existing Viaduct over the Los Angeles River between Mateo and Mill Streets, Los Angeles County, CA, Comment Period Ends: 08/24/2009, Contact: Eric Worrell 916–498–5890.

EIS No. 20090227, Draft EIS, UAF, AZ, Barry M. Goldwater Ranger East Range Enhancements, Proposes to Take Ten Different Actions would Enhance Range Operations and Training, Yuma, Pima and Maricopa Counties, AZ, Comment Period Ends: 08/24/2009, Contact: Lisa McCarrick 623–856–9475.

EIS No. 20090228, Final EIS, CGD, FL, Port Dolphin LLC Liquefied Natural Gas Deepwater Port License Application, Proposes to Own, Construct and Operate a Deepwater Port, Outer Continental Shelf, Manatee County, FL, Wait Period Ends: 08/10/2009, Contact: Raymond Martin 202–372–1449.

EIS No. 20090229, Draft EIS, NPS, FL, Big Cyress National Preserve Addition, General Management Plan/Wilderness Study/Off-Road Vehicle Management Plan, Implementation, Collier County, FL, Comment Period Ends: 09/08/2009, Contact: Patrick Malone 303–969–2415.

EIS No. 20090230, Draft EIS, AFS, CO, North San Juan Sheep and Goat Allotments, Proposal to Permit Domestic Livestock Grazing Management, Conejos Peak Ranger District, Rio Grande National Forest, Conejos, Rio Grande and Archuleta Counties, CO, Comment Period Ends: 08/24/2009, Contact: Kellly Garcia 719–274–8971.

EIS No. 20090231, Draft EIS, BIA, CA, Point Molate Mixed-Use Tribal Destination Resort and Casino, Proposed Project is to Strengthen the Tribal Government and Improve the Socioeconomic Status, Guidiville Band of Pomo Indian of the Guidiville Rancheria (Tribe), City of Richmond, Contra Costa County, CA, Comment Period Ends: 09/23/2009, Contact: Larry Blevin 916–978–6037.

EIS No. 20090232, Draft EIS, BIA, CA, Soboba Band of Luiseno Indians Horseshoe Grande Fee-to-Trust Project, Construction of a Hotel and Casino, City of San Jacinto, Riverside County, CA, Comment Period Ends: 09/15/2009, Contact: Pat O'Mallan 916–978–6043.

Dated: July 7, 2009.

Robert W. Hargrove,

Director, NEPA Compliance Division, Office of Federal Activities.

[FR Doc. E9–16353 Filed 7–9–09; 8:45 am]

BILLING CODE 6560–50–P

ENVIRONMENTAL PROTECTION AGENCY

[ER–FRL–8595–3]

Environmental Impact Statements and Regulations; Availability of EPA Comments

Availability of EPA comments prepared pursuant to the Environmental Review Process (ERP), under section 309 of the Clean Air Act and Section 102(2)(c) of the National Environmental Policy Act as amended. Requests for copies of EPA comments can be directed to the Office of Federal Activities at 202–564–7146.

An explanation of the ratings assigned to draft environmental impact statements (EISs) was published in FR dated April 17, 2009 (74 FR 17860).

Draft EISs

EIS No. 20090044, ERP No. D–IBR–J28023–CO, Aspinall Unit Operations—Colorado River Storage Project, Modifying Water Flow Operations, Implementation, Gunnison River, Gunnison, Montrose, Delta, and Mesa Counties, CO.

Summary: EPA expressed concerns because it appears that the proposed operations plan may not include sufficient peak flows to maintain high quality fish habitat. EPA also requested additional information on how the plan would meet the federal reserved water rights for the Black Canyon of the Gunnison National Park. Rating EC2.

EIS No. 20090115, ERP No. D–SFW–L65571–00, Western Snowy Plover Habitat Conservation Plan, Proposed Issuance of an Incidental Take Permit, Oregon Parks and Recreation Department, Oregon Coast, OR, CA, WA.

Summary: EPA has no objection to the proposed action. Rating LO.

EIS No. 20090122, ERP No. D–FRC–E03019–00, Phase VIII Expansion Project, Proposed to Construct, Own, Operate, and Maintain New Interstate National Gas Pipeline, Compressor, and Ancillary Facilities in Alabama and Florida.

Summary: EPA expressed concerns regarding potential impacts to noise, aquatic habitats, water resources, and wetlands, and made recommendations for mitigation measures. Rating EC2.

EIS No. 20090127, ERP No. D–FHW–E40826–TN, Interstate 55 Interchange at E.H. Crump Boulevard and South Boulevard Project, To Provide a Balanced Solution for Safety and Capacity Issues at the I55 Interchange, City of Memphis, Shelby County, TN.

Summary: EPA expressed concerns about mobile source air toxics and environmental justice. Rating EC2.

EIS No. 20090132, ERP No. D–NPS–D61063–00, Harpers Ferry National Historical Park, General Management Plan, Implementation, Harpers Ferry, Jefferson County, WV; Loudoun County, VA; and Washington County, MD.

Summary: EPA does not object to the proposed action. However, EPA requested clarifying information on a proposed pedestrian bridge and vegetation removal/manipulation in relation to rewatering the canal and as well as maintaining historic or scenic vistas in specified areas. Rating LO.

Final EISs

EIS No. 20090172, ERP No. F–NOA–K80052–CA, Southwest Fisheries Science Center Replacement, Construction and Operation, located on University of California, La Jolla, CA.

Summary: EPA does not object to the proposed action.

EIS No. *20090148,* ERP No. FS–COE–E01013–FL, Rock Mining in the Lake Belt Region Plan, Continuance of Limestone Mining Construction, Section 404 Permit, Miami-Dade County, FL.

Summary: EPA expressed objections to impacts to wetlands from the

proposed limestone mining, and made recommendations to reduce and mitigate those impacts, as well as seepage flows.

Dated: July 7, 2009.

Robert W. Hargrove,

Director, NEPA Compliance Division,

Office of Federal Activities.

[FR Doc. E9–16371 Filed 7–9–09; 8:45 am]

BILLING CODE 6560–50–P

FEDERAL DEPOSIT INSURANCE CORPORATION

Notice of Agency Meeting

Pursuant to the provisions of the ''Government in the Sunshine Act'' (5 U.S.C. 552b), notice is hereby given that at 9:01 a.m. on Tuesday, July 7, 2009, the Board of Directors of the Federal Deposit Insurance Corporation met in closed session to consider a matter related to the Corporation's corporate, supervisory, and resolution activities.

In calling the meeting, the Board determined, on motion of Vice Chairman Martin J. Gruenberg, seconded by Director Thomas J. Curry (Appointive), concurred in by Director John C. Dugan (Comptroller of the Currency), Director John E. Bowman (Acting Director, Office of Thrift Supervision), and Chairman Sheila C. Bair, that Corporation business required its consideration of the matter which was to be the subject of this meeting on less than seven days' notice to the public; that no earlier notice of the meeting was practicable; that the public interest did not require consideration of the matter in a meeting open to public observation; and that the matter could be considered in a closed meeting by authority of subsection (c)(9)(B) of the ''Government in the Sunshine Act'' (5 U.S.C. 552b(c)(9)(B)).

The meeting was held in the Board Room of the FDIC Building located at 550–17th Street, NW., Washington, DC.

Dated: July 7, 2009.

Robert E. Feldman,

Executive Secretary, Federal Deposit Insurance Corporation.

[FR Doc. E9–16396 Filed 7–9–09; 8:45 am]

BILLING CODE P

FEDERAL ACCOUNTING STANDARDS ADVISORY BOARD

Notice of Release of Exposure Draft on Accounting for Federal Oil and Gas Resources

AGENCY: Federal Accounting Standards Advisory Board.

ACTION: Notice.

Board Action: Pursuant to 31 U.S.C. 3511(d), the Federal Advisory Committee Act (Pub. L. 92–463), as amended, and the FASAB Rules of Procedure, as amended in April, 2004, notice is hereby given that the Federal Accounting Standards Advisory Board (FASAB) has released the Exposure Draft on *Accounting for Federal Oil and Gas Resources.*

The exposure draft proposes standards that would result in recognition of the estimated value of royalties from Federal oil and gas leases and changes in those values over time as well as the amount of royalties designated for distribution to non-Federal entities such as State governments. The Exposure Draft is available on the FASAB home page *http://www.fasab.gov/exposure.html.* Copies can be obtained by contacting FASAB at (202) 512–7350.

Respondents are encouraged to comment on any part of the exposure draft. Written comments are requested by September 8, 2009, and should be sent to: Wendy M. Payne, Executive Director, Federal Accounting Standards Advisory Board, 441 G Street, NW., Suite 6814, Mail Stop 6K17V, Washington, DC 20548.

FOR FURTHER INFORMATION CONTACT: Wendy Payne, Executive Director, at (202) 512–7350.

Authority: Federal Advisory Committee Act, Pub. L. 92–463.

Dated: July 7, 2009.

Charles Jackson,

Federal Register Liaison Officer.

[FR Doc. E9–16399 Filed 7–9–09; 8:45 am]

BILLING CODE 1610–01–P

FEDERAL HOUSING FINANCE AGENCY

[No. 2009–N–09]

Federal Home Loan Bank Members Selected for Community Support Review

AGENCY: Federal Housing Finance Agency.

ACTION: Notice.

SUMMARY: The Federal Housing Finance Agency (FHFA) is announcing the Federal Home Loan Bank (Bank) members it has selected for the 2008–09 sixth quarter review cycle under the FHFA's community support requirements regulation. This notice also prescribes the deadline by which Bank members selected for review must submit Community Support Statements to FHFA.

DATES: Bank members selected for the review cycle under the FHFA's community support requirements regulation must submit completed Community Support Statements to FHFA on or before August 31, 2009.

ADDRESSES: Bank members selected for the 2008–09 sixth quarter review cycle under the FHFA's community support requirements regulation must submit completed Community Support Statements to FHFA either by hard-copy mail at the Federal Housing Finance Agency, Housing Mission and Goals, 1625 Eye Street, NW., Washington, DC 20006, or by electronic mail at *LENORA.MORTON@FHFA.GOV.*

FOR FURTHER INFORMATION CONTACT: Lenora Morton, Administrative Specialist, Housing Mission and Goals, Federal Housing Finance Agency, by telephone at 202–408–2819, by electronic mail at *LENORA.MORTON@FHFA.GOV,* or by hard-copy mail at the Federal Housing Finance Agency, 1625 Eye Street, NW., Washington, DC 20006.

SUPPLEMENTARY INFORMATION:

I. Selection for Community Support Review

Section 10(g)(1) of the Federal Home Loan Bank Act (Bank Act) requires FHFA to promulgate regulations establishing standards of community investment or service Bank members must meet in order to maintain access to long-term advances. *See* 12 U.S.C. 1430(g)(1). The regulations promulgated by FHFA must take into account factors such as the Bank member's performance under the Community Reinvestment Act of 1977 (CRA), 12 U.S.C. 2901 *et seq.,* and record of lending to first-time homebuyers. *See* 12 U.S.C. 1430(g)(2). Pursuant to section 10(g) of the Bank Act, FHFA has promulgated a community support requirements regulation that establishes standards a Bank member must meet in order to maintain access to long-term advances, and review criteria FHFA must apply in evaluating a member's community support performance. *See* 12 CFR part 944. The regulation includes standards and criteria for the two statutory factors—CRA performance and record of lending to first-time homebuyers. 12 CFR 944.3. Only members subject to the CRA must meet the CRA standard. 12 CFR 944.3(b). All members, including those not subject to CRA, must meet the first-time homebuyer standard. 12 CFR 944.3(c).

Under the rule, FHFA selects approximately one-eighth of the

members in each Bank district for community support review each calendar quarter. 12 CFR 944.2(a). FHFA will not review an institution's community support performance until it has been a Bank member for at least one year. Selection for review is not, nor should it be construed as, any indication of either the financial condition or the community support performance of the member.

Each Bank member selected for review must complete a Community Support Statement and submit it to FHFA by the August 31, 2009 deadline prescribed in this notice. 12 CFR 944.2(b)(1)(ii) and (c). On or before July 24, 2009, each Bank will notify the members in its district that have been selected for the 2008–09 sixth quarter community support review cycle that they must complete and submit to FHFA by the deadline a Community Support Statement. 12 CFR 944.2(b)(2)(i). The member's Bank will provide a blank Community Support Statement Form, which also is available on the FHFA's Web site: *http://www.fhfa.gov*. Upon request, the member's Bank also will provide assistance in completing the Community Support Statement.

FHFA has selected the following members for the 2008–09 sixth quarter community support review cycle:

Federal Home Loan Bank of Boston—District 1

The Community's Bank	Bridgeport	Connecticut.
The Bank of Fairfield	Fairfield	Connecticut.
Charter Oak FCU	Groton	Connecticut.
Bank of New Canaan	New Canaan	Connecticut.
The Bank of Southern Connecticut	New Haven	Connecticut.
Chelsea Groton SB	Norwich	Connecticut.
United Business & Industry FCU	Plainville	Connecticut.
Rockville Bank	Rockville	Connecticut.
Salisbury Bank & Trust Company	Salisbury	Connecticut.
Thomaston SB	Thomaston	Connecticut.
Connecticut River Community Bank	Wethersfield	Connecticut.
Savings Institute Bank and Trust Company	Willimantic	Connecticut.
Wilton Bank	Wilton	Connecticut.
360 FCU	Windsor Locks	Connecticut.
Kennebec SB	Augusta	Maine.
Bath Savings Institution	Bath	Maine.
Five County CU	Bath	Maine.
Brewer FCU	Brewer	Maine.
The County FCU	Caribou	Maine.
Maine Highlands FCU	Dexter	Maine.
Casco FCU	Gorham	Maine.
Maine Savings FCU	Hampden	Maine.
Androscoggin SB	Lewiston	Maine.
Penobscot FCU	Old Town	Maine.
Saco & Biddeford Savings Institution	Saco	Maine.
Sanford IFS	Sanford	Maine.
Hannaford Associates FCU	Scarborough	Maine.
Border Trust Company	South China	Maine.
Coast Line CU	South Portland	Maine.
Town and Country FCU	South Portland	Maine.
Leader Bank, NA	Arlington	Massachusetts.
Medical Area FCU	Boston	Massachusetts.
Mercantile Bank and Trust Company	Boston	Massachusetts.
University CU	Boston	Massachusetts.
The Community Bank	Brockton	Massachusetts.
Aldenville CU	Chicopee	Massachusetts.
Chicopee SB	Chicopee	Massachusetts.
Easthampton Savings	Easthampton	Massachusetts.
Martha's Vineyard SB	Edgartown	Massachusetts.
Bank of Fall River, A Co-Operative Bank	Fall River	Massachusetts.
GFA FCU	Gardner	Massachusetts.
Gloucester Co-Operative Bank	Gloucester	Massachusetts.
Avidia Bank	Hudson	Massachusetts.
Commonwealth Cooperative Bank	Hyde Park	Massachusetts.
Lee Bank	Lee	Massachusetts.
Lowell Five Cents SB	Lowell	Massachusetts.
Northern Massachusetts Telephone Workers Community CU	Lowell	Massachusetts.
Washington SB	Lowell	Massachusetts.
Community CU of Lynn	Lynn	Massachusetts.
Eastern Bank	Lynn	Massachusetts.
River Works CU	Lynn	Massachusetts.
St. Jean's CU	Lynn	Massachusetts.
National Grand Bank of Marblehead	Marblehead	Massachusetts.
Strata Bank	Medway	Massachusetts.
Middlesex Savings	Natick	Massachusetts.
Newburyport Five Cents SB	Newburyport	Massachusetts.
Merrimack Valley FCU	North Andover	Massachusetts.
North Easton SB	North Easton	Massachusetts.
Norword Cooperative Bank	Norwood	Massachusetts.
Seamen's Bank	Provincetown	Massachusetts.

Quincy CU	Quincy	Massachusetts.
Randolph Savings	Randolph	Massachusetts.
Granite SB	Rockport	Massachusetts.
Rockport National Bank	Rockport	Massachusetts.
Saugus FCU	Saugus	Massachusetts.
Cambridge Portuguese CU	Somerville	Massachusetts.
Stoughton Cooperative Bank	Stoughton	Massachusetts.
Walpole Co-Operative Bank	Walpole	Massachusetts.
Watertown SB	Watertown	Massachusetts.
United Bank	West Springfield	Massachusetts.
Weymouth Bank	Weymouth	Massachusetts.
Northern Bank and Trust Company	Woburn	Massachusetts.
First Colebrook Bank	Colebrook	New Hampshire.
Merrimack County SB	Concord	New Hampshire.
New Hampshire FCU	Concord	New Hampshire.
Laconia SB	Laconia	New Hampshire.
Mascoma SB	Lebanon	New Hampshire.
Meredith Village SB	Meredith	New Hampshire.
Bank of New England	Windham	New Hampshire.
Navagant CU	Central Falls	Rhode Island.
Independence Bank	East Greenwich	Rhode Island.
Freedom National Bank	Greenville	Rhode Island.
Greenwood CU	Warwick	Rhode Island.
Home Loan Investment Bank, FSB	Warwick	Rhode Island.
Westerly Community CU	Westerly	Rhode Island.
Northcountry FCU	South Burling	Vermont.

Federal Home Loan Bank of New York—District 2

BCB Community Bank	Bayonne	New Jersey.
Somerset Hills Bank	Bernardsville	New Jersey.
ISN Bank	Cherry Hill	New Jersey.
McGraw-Hill Employees FCU	East Windsor	New Jersey.
Mariner's Bank	Edgewater	New Jersey.
Select Bank	Egg Harbor Ci	New Jersey.
First Bank Americano	Elizabeth	New Jersey.
Fort Lee FSB	Fort Lee	New Jersey.
Peapack-Gladstone Bank	Gladstone	New Jersey.
Skylands Community Bank	Hackettstown	New Jersey.
Haddon SB	Haddon Height	New Jersey.
Gibraltar SB	Mendham	New Jersey.
Two River Community Bank	Middletown	New Jersey.
Cornerstone Bank	Moorestown	New Jersey.
New Millennium Bank	New Brunswick	New Jersey.
New Community FCU	Newark	New Jersey.
Lakeland Bank	Oak Ridge	New Jersey.
Crown Bank	Ocean City	New Jersey.
Hopewell Valley Community Bank	Pennington	New Jersey.
RSI Bank	Rahway	New Jersey.
Heritage Community Bank	Randolph	New Jersey.
Rumson-Fair Haven Bank & Trust Company	Rumson	New Jersey.
Allegiance Community Bank	South Orange	New Jersey.
First Financial FCU	Toms River	New Jersey.
First Bank	Williamstown	New Jersey.
Flatbush Federal Savings and Loan Association	Brooklyn	New York.
Manufacturers and Traders Trust Company	Buffalo	New York.
Bank of Greene County	Catskill	New York.
Bank of Cattaraugus	Cattaraugus	New York.
Fairport SB	Fairport	New York.
USNY Bank	Geneva	New York.
Trustco Bank	Glenville	New York.
Highland Falls Federal Savings & Loan	Highland Fall	New York.
Steuben Trust Company	Hornell	New York.
First National Bank of Long Island (The)	Huntington	New York.
New York Commercial Bank	Islandia	New York.
Ulster SB	Kingston	New York.
Community Resource FCU	Latham	New York.
United Nations FCU	Long Island C	New York.
The Mahopac National Bank	Mahopac	New York.
Suffolk FCU	Medford	New York.
Utica Gas & Electric Employees FCU	New Hartford	New York.
Alpine Capital Bank	New York	New York.
BPD International Bank	New York	New York.
Habib American Bank	New York	New York.
Merrill Lynch Bank & Trust Company, FSB	New York	New York.
Park Avenue Bank (The)	New York	New York.

Signature Bank	New York	New York.
Sterling National Bank	New York	New York.
Woori America Bank	New York	New York.
Intervest National Bank	New York	New York.
TEG FCU	Poughkeepsie	New York.
Quorum FCU	Purchase	New York.
NorthEastern Engineers FCU	Richmond Hill	New York.
Bank of Richmondville	Richmondville	New York.
Summit FCU	Rochester	New York.
Rome SB (The)	Rome	New York.
Sunmark FCU	Schenectady	New York.
Sidney FCU	Sidney	New York.
Solvay Bank	Solvay	New York.
Victory State Bank	Staten Island	New York.
Walden SB	Walden	New York.
Watertown SB	Watertown	New York.
Champlain National Bank	Willsboro	New York.
Community FSB	Woodhaven	New York.
Banco Popular De Puerto Rico	Hato Rey	Puerto Rico.

Federal Home Loan Bank of Pittsburgh—District 3

The Bancorp Bank	Wilmington	Delaware.
Lehigh Valley Educators CU	Allentown	Pennsylvania.
Enterprise Bank	Allison Park	Pennsylvania.
Apollo Trust Company	Apollo	Pennsylvania.
Sun East FCU	Aston	Pennsylvania.
Merchants Bank of Bangor	Bangor	Pennsylvania.
Integrity Bank	Camp Hill	Pennsylvania.
The Farmers and Merchants Trust Company	Chambersburg	Pennsylvania.
Conestoga Bank	Chester Spring	Pennsylvania.
Cambria County Federal Savings & Loan	Cresson	Pennsylvania.
DNB First, National Association	Downingtown	Pennsylvania.
Elderton State Bank	Elderton	Pennsylvania.
The First National Bank of Fredericksburg	Fredericksburg	Pennsylvania.
PeoplesBank, a Corodrus Valley Co	Glen Rock	Pennsylvania.
The Gratz National Bank	Gratz	Pennsylvania.
The Harleysville National Banking & Trust Co	Harleysville	Pennsylvania.
Jersey Shore State Bank	Jersey Shore	Pennsylvania.
First Cornerstone Bank	King of Prussia	Pennsylvania.
Reliance FCU	King of Prussia	Pennsylvania.
Bank of Landisburg	Landisburg	Pennsylvania.
The First National Bank of Liverpool	Liverpool	Pennsylvania.
The Mars National Bank	Mars	Pennsylvania.
Union National Bank of Mount Carmel	Mount Carmel	Pennsylvania.
New Tripoli Bank	New Tripoli	Pennsylvania.
Orrstown Bank	Orrstown	Pennsylvania.
Police and Fire FCU	Philadelphia	Pennsylvania.
St. Edmond's, FSB	Philadelphia	Pennsylvania.
Phoenixville Federal Bank & Trust	Phoenixville	Pennsylvania.
Mainline National Bank	Portage	Pennsylvania.
Diamond CU	Pottstown	Pennsylvania.
Scottdale Bank & Trust Company	Scottdale	Pennsylvania.
Apex Community FCU	Stowe	Pennsylvania.
York Traditions Bank	York	Pennsylvania.
Freedom Bank, Inc	Belington	West Virginia.
Clear Mountain Bank	Bruceton Mill	West Virginia.
First Bank of Charleston, Inc	Charleston	West Virginia.
Summit Community Bank, Inc	Charleston	West Virginia.
Fairmont FCU	Fairmont	West Virginia.
First Exchange Bank	Mannington	West Virginia.
Northern Hancock Bank & Trust Company	Newell	West Virginia.
FNB Bank, Inc	Romney	West Virginia.
West Union Bank	West Union	West Virginia.
Main Street Bank Corporation	Wheeling	West Virginia.

Federal Home Loan Bank of Atlanta—District 4

Aliant Bank	Alexander City	Alabama.
Auburn Bank	Auburn	Alabama.
Mutual Savings CU	Birmingham	Alabama.
The First National Bank of Brundidge	Brundidge	Alabama.
Traditions Bank	Cullman	Alabama.
The First National Bank of Dozier	Dozier	Alabama.
Community Banking & Trust Company of Southeast Alabama	Enterprise	Alabama.
Bank of Evergreen	Evergreen	Alabama.

First National Bank of Baldwin County	Foley	Alabama.
First State Bank of DeKalb County	Fort Payne	Alabama.
Citizens Bank & Trust	Guntersville	Alabama.
Merchants Bank	Hanceville	Alabama.
First Commercial Bank	Huntsville	Alabama.
Redstone FCU	Huntsville	Alabama.
Corporate America CU	Irondale	Alabama.
Covenant Bank	Leeds	Alabama.
Peachtree Bank	Maplesville	Alabama.
Colonial Bank	Montgomery	Alabama.
The North Jackson Bank	Stevenson	Alabama.
First State Bank of the South, Inc	Sulligent	Alabama.
The Bank of Tuscaloosa	Tuscaloosa	Alabama.
First Community Bank of Central Alabama	Wetumpka	Alabama.
Bank of Georgetown	Washington	District of Columbia.
Department of Commerce FCU	Washington	District of Columbia.
Treasury Department Federal Credit Union	Washington	District of Columbia.
The First State Bank of Arcadia	Arcadia	Florida.
Central Florida State Bank	Belleview	Florida.
1st United Bank	Boca Raton	Florida.
Palm Beach Community Bank	Boynton Beach	Florida.
Harvesters FCU	Cantonment	Florida.
Wakulla Bank	Crawfordville	Florida.
Floridian Community Bank, Inc	Davie	Florida.
Peninsula Bank	Englewood	Florida.
Bank of Florida	Fort Lauderdale	Florida.
Valley Bank	Fort Lauderdale	Florida.
Florida Gulf Bank	Fort Myers	Florida.
Preferred Community Bank	Fort Myers	Florida.
Riverside National Bank of Florida	Fort Pierce	Florida.
Florida CU	Gainesville	Florida.
Peoples Bank of Graceville	Graceville	Florida.
Home Federal Bank of Hollywood	Hollywood	Florida.
CenterBank of Jacksonville, NA	Jacksonville	Florida.
Jax FCU	Jacksonville	Florida.
Oceanside Bank	Jacksonville	Florida.
Citizens First Bank	Lady Lake	Florida.
Peoples State Bank	Lake City	Florida.
Coastal Bank	Merritt Island	Florida.
Premier American Bank	Miami	Florida.
Sunstate Bank	Miami	Florida.
Union Credit Bank	Miami	Florida.
University CU	Miami	Florida.
The First National Bank of Florida	Milton	Florida.
Bank of Florida—Southwest	Naples	Florida.
Royal Palm Bank of Florida	Naples	Florida.
Shamrock Bank of Florida	Naples	Florida.
Jefferson Bank of Florida	Oldsmar	Florida.
Independent Banker's Bank of Florida	Orlando	Florida.
Insight Financial CU	Orlando	Florida.
East Coast Community Bank	Ormond Beach	Florida.
Putnam State Bank	Palatka	Florida.
Southbank, FSB	Palm Beach Garden	Florida.
First National Bank Northwest Florida	Panama City	Florida.
Summit Bank, N.A	Panama City	Florida.
Gulf Coast Community Bank	Pensacola	Florida.
Hillsboro Bank	Plant City	Florida.
Sunshine State Community Bank	Port Orange	Florida.
Bayside SB	Port St. Joe	Florida.
Sanibel Captiva Community Bank	Sanibel	Florida.
Bank of Commerce	Sarasota	Florida.
Gateway Bank of Southwest Florida	Sarasota	Florida.
Sabal Palm Bank	Sarasota	Florida.
Seacoast National Bank	Stuart	Florida.
Sunshine SB	Tallahassee	Florida.
Bay Gulf CU	Tampa	Florida.
Century Bank of Florida	Tampa	Florida.
First Commercial Bank of Tampa	Tampa	Florida.
Florida Bank	Tampa	Florida.
Palm Bank	Tampa	Florida.
The Bank of Tampa	Tampa	Florida.
Community NB of Sarasota County	Venice	Florida.
Commerce National Bank of Florida	Winter Park	Florida.
First National Bank of Central Florida	Winter Park	Florida.
Riverside Bank of Central Florida	Winter Park	Florida.
Centerstate Bank West Florida, N.A	Zephyrhills	Florida.

First American Bank and Trust Company	Athens	Georgia.
Bank of Atlanta	Atlanta	Georgia.
Georgia Commerce Bank	Atlanta	Georgia.
Georgia Primary Bank	Atlanta	Georgia.
Resurgens Bank	Atlanta	Georgia.
Planters & Citizens Bank	Camilla	Georgia.
McIntosh Commercial Bank	Carrollton	Georgia.
Century Bank of Georgia	Cartersville	Georgia.
The First National Bank of Chatsworth	Chatsworth	Georgia.
Mountain Heritage Bank	Clayton	Georgia.
Citizens Bank of Cochran	Cochran	Georgia.
State Bank of Cochran	Cochran	Georgia.
Merchants & Farmers Bank of Comer	Comer	Georgia.
Eastside Commercial Bank	Conyers	Georgia.
First State Bank of Randolph County	Cuthbert	Georgia.
First Intercontinental Bank	Doraville	Georgia.
Douglas National Bank	Douglas	Georgia.
Metro Bank	Douglasville	Georgia.
Gwinnett Community Bank	Duluth	Georgia.
Citizens Bank and Trust Company	Eastman	Georgia.
Southern Community Bank	Fayetteville	Georgia.
First National Bank	Folkston	Georgia.
National Bank of Gainesville	Gainesville	Georgia.
The Glennville Bank and Trust Company	Glennville	Georgia.
Bank of Hazlehurst	Hazlehurst	Georgia.
Heritage Bank	Hinesville	Georgia.
Farmers and Merchants Bank	Lakeland	Georgia.
Brand Banking Company	Lawrenceville	Georgia.
Atlantic Southern Bank	Macon	Georgia.
MidSouth FCU	Macon	Georgia.
Security Bank of Bibb County	Macon	Georgia.
Southwest Georgia Bank	Moultrie	Georgia.
Bank of Coweta	Newnan	Georgia.
Associated CU	Norcross	Georgia.
Georgian Bank	Powder Spring	Georgia.
Heritage First Bank	Rome	Georgia.
Carver State Bank	Savannah	Georgia.
First Chatham Bank	Savannah	Georgia.
Bank of Soperton	Soperton	Georgia.
United Security Bank	Sparta	Georgia.
First Southern National Bank	Statesboro	Georgia.
The First State Bank	Stockbridge	Georgia.
Security Bank of Gwinnett County	Suwannee	Georgia.
Citizens Bank of Swainsboro	Swainsboro	Georgia.
Bank of Upson	Thomaston	Georgia.
Thomasville National Bank	Thomasville	Georgia.
Community Bank of West Georgia	Villa Rica	Georgia.
North Georgia Bank	Watkinsville	Georgia.
Atlantic Coast Bank	Waycross	Georgia.
First Cherokee State Bank	Woodstock	Georgia.
Security Bank of North Metro	Woodstock	Georgia.
First State Bank	Wrens	Georgia.
Bank of Wrightsville	Wrightsville	Georgia.
Bradford Bank	Baltimore	Maryland.
Kopernik Federal Bank	Baltimore	Maryland.
Legg Mason Trust Company, National Association	Baltimore	Maryland.
Liberty FS & LA	Baltimore	Maryland.
Slavie FSB	Baltimore	Maryland.
United Medical Bank, FSB	Baltimore	Maryland.
The National Bank of Cambridge	Cambridge	Maryland.
Chesapeake Bank and Trust Company	Chestertown	Maryland.
BlueRidge Bank	Frederick	Maryland.
Mid-Atlanta FCU	Gaithersburg	Maryland.
Hagerstown Trust Company	Hagerstown	Maryland.
Lafayette FCU	Kensington	Maryland.
Tower FCU	Laurel	Maryland.
The New Windsor State Bank	New Windsor	Maryland.
First United Bank & Trust	Oakland	Maryland.
The National Bank of Rising Sun	Rising Sun	Maryland.
Bank of Stanly	Albemarle	North Carolina.
Home SB of Albemarle, SSB	Albemarle	North Carolina.
Vantage South Bank	Burlington	North Carolina.
Harrington Bank, FSB	Chapel Hill	North Carolina.
HomeTrust Bank	Clyde	North Carolina.
Cabarrus Bank & Trust Company	Concord	North Carolina.
Self-help CU	Durham	North Carolina.

Self-Help FCU	Durham	North Carolina.
Farmers & Merchants Bank	Granite Quarry	North Carolina.
First Carolina Corporate CU	Greensboro	North Carolina.
Premier Commercial Bank	Greensboro	North Carolina.
Millennia Community Bank	Greenville	North Carolina.
First Flight FCU	Havelock	North Carolina.
Carolina Trust Bank	Lincolnton	North Carolina.
Surrey Bank & Trust	Mount Airy	North Carolina.
Bank of Oak Ridge	Oak Ridge	North Carolina.
Capital Bank	Raleigh	North Carolina.
First National Bank of Shelby	Shelby	North Carolina.
Allegacy FCU	Winston-Salem	North Carolina.
Members CU	Winston-Salem	North Carolina.
Community FirstBank of Charleston	Charleston	South Carolina.
Palmetto Citizens FCU	Columbia	South Carolina.
Cornerstone National Bank	Easley	South Carolina.
Sharonview FCU	Fort Mill	South Carolina.
SPC Cooperative CU	Hartsville	South Carolina.
Farmers and Merchants Bank	Holly Hill	South Carolina.
Carolina Trust FCU	Myrtle Beach	South Carolina.
SCBT, National Association	Orangeburg	South Carolina.
First South Bank	Spartanburg	South Carolina.
Pentagon FCU	Alexandria	Virginia.
Shiloh of Alexandria FCU	Alexandria	Virginia.
E*Trade Bank	Arlington	Virginia.
Justice FCU	Chantilly	Virginia.
American National Bank & Trust Co	Danville	Virginia.
Fairfax County FCU	Fairfax	Virginia.
Constellation FCU	Falls Church	Virginia.
The Bank of Fincastle	Fincastle	Virginia.
First Capital Bank	Glen Allen	Virginia.
Northwest FCU	Herndon	Virginia.
New Peoples Bank	Honaker	Virginia.
Synergy One FCU	Manassas	Virginia.
Capital One, National Association	McLean	Virginia.
The Middleburg Bank	Middleburg	Virginia.
1st Advantage FCU	Newport News	Virginia.
First Sentinel Bank	Richlands	Virginia.
Dupont Fibers FCU	Richmond	Virginia.
Virginia CU, Inc	Richmond	Virginia.
Freedom First FCU	Roanoke	Virginia.
Franklin Community Bank, NA	Rocky Mount	Virginia.
Pioneer Bank	Stanley	Virginia.
First Bank	Strasburg	Virginia.
Northern Neck State Bank	Warsaw	Virginia.
Frontier Community Bank	Waynesboro	Virginia.
Baylands FCU	West Point	Virginia.
Citizens and Farmers Bank	West Point	Virginia.

Federal Home Loan Bank of Cincinnati—District 5

Ashland CU	Ashland	Kentucky.
Bedford Loan & Deposit Bank	Bedford	Kentucky.
South Central Bank of Bowling Green, Inc	Bowling Green	Kentucky.
Meade County Bank	Brandenburg	Kentucky.
Bank of Ohio County	Dundee	Kentucky.
First Security Trust Bank, Inc	Florence	Kentucky.
Victory Community Bank	Fort Mitchell	Kentucky.
Edmonton State Bank	Glasgow	Kentucky.
South Central Bank of Barre	Glasgow	Kentucky.
Bank of Harlan	Harlan	Kentucky.
Lawrenceburg Bank and Trust Company	Harrodsburg	Kentucky.
Bank of Hindman	Hindman	Kentucky.
First Security Bank of Kentucky	Island	Kentucky.
The Farmers National Bank of Lebanon	Lebanon	Kentucky.
Forcht Bank, National Association	Lexington	Kentucky.
GTKY CU	Lexington	Kentucky.
Liberty Alliance FCU	Lexington	Kentucky.
Members Heritage FCU	Lexington	Kentucky.
Commonwealth Bank & Trust Co	Louisville	Kentucky.
Central Bank of Jefferson County	Louisville	Kentucky.
Jefferson County FCU	Louisville	Kentucky.
Park Community FCU	Louisville	Kentucky.
PBI Bank	Louisville	Kentucky.
Rural Cooperatives CU	Louisville	Kentucky.
United Community Bank of West Kentucky, Inc	Morganfield	Kentucky.

Morgantown Bank & Trust Co	Morgantown	Kentucky.
Central Bank, FSB	Nicholasville	Kentucky.
First State Financial, Inc.	Pineville	Kentucky.
First & Peoples Bank and Trust Co	Russell	Kentucky.
First & Farmers National Bank, Inc	Somerset	Kentucky.
Bank of McCreary County	Whitley City	Kentucky.
Grant County Deposit Bank	Williamstown	Kentucky.
Firestone FCU	Akron	Ohio.
Firstmerit Bank, National Association	Akron	Ohio.
GenFed FCU	Akron	Ohio.
Firelands FCU	Bellevue	Ohio.
Bethel Building & Loan Company	Bethel	Ohio.
Equitable S&L Co	Cadiz	Ohio.
Advantage Bank	Cambridge	Ohio.
Dynamic FCU	Celina	Ohio.
Cincinnati Federal Employees FCU	Cincinnati	Ohio.
Fifth Third Bank	Cincinnati	Ohio.
Fort Washington Savings Company	Cincinnati	Ohio.
General Electric CU	Cincinnati	Ohio.
Guardian SB	Cincinnati	Ohio.
Mt. Washington Savings & Loan	Cincinnati	Ohio.
U.S. Bank, National Association	Cincinnati	Ohio.
Cme FCU	Columbus	Ohio.
Corporate One FCU	Columbus	Ohio.
OhioHealth FCU	Columbus	Ohio.
Telhio CU, Inc	Columbus	Ohio.
Dayton Firefighters FCU	Dayton	Ohio.
BMI FCU	Dublin	Ohio.
Eaton National Bank and Trust Co	Eaton	Ohio.
Wright-Pattman CU	Fairborn	Ohio.
Community First Bank, N.A	Forest	Ohio.
First Ohio CU Inc	Fostoria	Ohio.
Community National Bank	Franklin	Ohio.
Galion Building and Loan Bank	Galion	Ohio.
Ohio Catholic FCU	Garfield Heights	Ohio.
The Home B & Lc	Greenfield	Ohio.
Greenville National Bank	Greenville	Ohio.
Harvest FCU	Heath	Ohio.
Hopewell FCU	Heath	Ohio.
Jeep Country FCU	Holland	Ohio.
Sun Center FCU	Lagrange	Ohio.
Superior FCU	Lima	Ohio.
First FS&LA	Lorain	Ohio.
CenterBank	Milford	Ohio.
RiverHills Bank	New Richmond	Ohio.
Geauga SB	Newbury	Ohio.
Bay Area CU, Inc	Oregon	Ohio.
Home National Bank	Racine	Ohio.
Ripley FSB	Ripley	Ohio.
Strasburg SB	Strasburg	Ohio.
Directions CU	Sylvania	Ohio.
Signature Bank, N.A	Toledo	Ohio.
Liberty Bank, N.A	Twinsburg	Ohio.
The Peoples SB	Urbana	Ohio.
First FS&LA of Van Wert	Van Wert	Ohio.
People's Community Bank	West Chester	Ohio.
First State Bank of Adams County	Winchester	Ohio.
Ohio Legacy Bank, NA	Wooster	Ohio.
Dollar Bank, FSB	Pittsburgh	Pennsylvania.
SouthEast Bank & Trust	Athens	Tennessee.
The Citizens NB of Athens	Athens	Tennessee.
Citizens Bank	Carthage	Tennessee.
Tennessee Valley FCU	Chattanooga	Tennessee.
Cumberland Bank & Trust Company	Clarksville	Tennessee.
First Farmers and Merchants Bank	Columbia	Tennessee.
Bank of Putnam County	Cookeville	Tennessee.
Rhea County National Bank	Dayton	Tennessee.
First Federal Bank	Dickson	Tennessee.
Carter County Bank	Elizabethton	Tennessee.
Gates Banking & Trust Co	Gates	Tennessee.
Tennessee State Bank	Gatlinburg	Tennessee.
Bank of Gleason	Gleason	Tennessee.
American Patriot Bank	Greeneville	Tennessee.
GreenBank	Greeneville	Tennessee.
Bank of Halls	Halls	Tennessee.
Commercial Bank	Harrogate	Tennessee.

Chester County Bank	Henderson	Tennessee.
Union Bank	Jamestown	Tennessee.
Citizens State Bank	Jasper	Tennessee.
Bank of Tennessee	Kingsport	Tennessee.
Holston Valley CU	Kingsport	Tennessee.
Clayton Bank and Trust	Knoxville	Tennessee.
First Freedom Bank	Lebanon	Tennessee.
First Bank	Lexington	Tennessee.
American B&T of CUMB	Livingston	Tennessee.
Fedex Employees Credit Association FCU	Memphis	Tennessee.
Bank of Milan (The)	Milan	Tennessee.
Patriot Bank	Millington	Tennessee.
Jefferson Federal Bank	Morristown	Tennessee.
Volunteer Corporate CU	Nashville	Tennessee.
Tennessee Members 1st FCU	Oak Ridge	Tennessee.
Y–12 FCU	Oak Ridge	Tennessee.
Commercial B&T Co	Paris	Tennessee.
Security B&T Co	Paris	Tennessee.
Community South Bank	Parsons	Tennessee.
Farmers Bank (The)	Portland	Tennessee.
Central Bank	Savannah	Tennessee.
Citizens National Bank	Sevierville	Tennessee.
Mountain National Bank	Sevierville	Tennessee.
1ST Community Bank of Bedford	Shelbyville	Tennessee.
People Bank of Bedford County	Shelbyville	Tennessee.
First Bank of Tennessee	Spring City	Tennessee.
Farmer's and Merchants Bank	Trezevant	Tennessee.
American City Bank	Tullahoma	Tennessee.
Reelfoot Bank	Union City	Tennessee.
Citizens First Bank	Wartburg	Tennessee.

Federal Home Loan Bank of Indianapolis—District 6

First National Bank	Cloverdale	Indiana.
Centra CU	Columbus	Indiana.
Irwin Union Bank, FSB	Columbus	Indiana.
Crane FCU	Crane	Indiana.
CSB Bank	Cynthiana	Indiana.
Bank of Evansville	Evansville	Indiana.
Three Rivers FCU	Fort Wayne	Indiana.
Tower Bank and Trust Company	Fort Wayne	Indiana.
Heartland Community Bank	Franklin	Indiana.
Grabill Bank	Grabill	Indiana.
Greenfield Banking Company	Greenfield	Indiana.
Finance Center FCU	Indianapolis	Indiana.
Community First Bank of Howard County	Kokomo	Indiana.
Solidarity Community FCU	Kokomo	Indiana.
Lafayette SB	Lafayette	Indiana.
State Bank of Lizton	Lizton	Indiana.
Peoples Savings & Loan Association	Monticello	Indiana.
Ball State FCU	Muncie	Indiana.
WGE FCU	Muncie	Indiana.
The Napoleon State Bank	Napoleon	Indiana.
New Washington State Bank (The)	New Washington	Indiana.
Heritage FCU	Newburgh	Indiana.
American T&S Bank of Whiting	Whiting	Indiana.
Firstbank—ALMA	Alma	Michigan.
Bank of Alpena	Alpena	Michigan.
Bank of Ann Arbor	Ann Arbor	Michigan.
Signature Bank	Bad Axe	Michigan.
Lake Osceola State Bank	Baldwin	Michigan.
Kellogg Community FCU	Battle Creek	Michigan.
Central State Bank	Beulah	Michigan.
Clarkston State Bank	Clarkston	Michigan.
Michigan Schools and Government CU	Clinton Towns	Michigan.
Motor City CO–OP CU	Clinton Towns	Michigan.
Eastern Michigan Bank	Croswell	Michigan.
Auto Club Trust, FSB	Dearborn	Michigan.
DFCU Financial CU	Dearborn	Michigan.
Summit Community Bank	East Lansing	Michigan.
State Bank of Ewen	Ewen	Michigan.
CU One	Ferndale	Michigan.
Financial Plus FCU	Flint	Michigan.
Frankenmuth CU	Frankenmuth	Michigan.
Community West CU	Grand Rapids	Michigan.
Hillsdale County National Bank	Hillsdale	Michigan.

Macatawa Bank	Holland	Michigan.
Independent Bank	Ionia	Michigan.
CP FCU	Jackson	Michigan.
Consumers CU	Kalamazoo	Michigan.
Educational Community CU	Kalamazoo	Michigan.
Keystone Community Bank	Kalamazoo	Michigan.
Case CU	Lansing	Michigan.
Community Choice CU	Livonia	Michigan.
Co-operative Services CU	Livonia	Michigan.
Marshall Community CU	Marshall	Michigan.
Members First CU	Midland	Michigan.
Monroe County Community CU	Monroe	Michigan.
Community Central Bank	Mount Clemens	Michigan.
FirstBank	Mount Pleasant	Michigan.
Community Shores Bank	Muskegon	Michigan.
Range Bank, N.A	Negaunee	Michigan.
The First National Bank of Norway	Norway	Michigan.
New Liberty Bank	Plymouth	Michigan.
North Central Area CU	Roscommon	Michigan.
Christian Financial CU	Roseville	Michigan.
United Financial CU	Saginaw	Michigan.
United FCU	Saint Joseph	Michigan.
Sterling Bank & Trust FSB	Southfield	Michigan.
Seaway Community Bank	St. Clair	Michigan.
Lakeside Community Bank	Sterling Heig	Michigan.
SSBBank	Stockbridge	Michigan.
First Catholic FCU	Taylor	Michigan.
United Bank & Trust	Tecumseh	Michigan.
Members CU	Traverse City	Michigan.
TBA CU	Traverse City	Michigan.
Michigan Catholic CU	Troy	Michigan.

Federal Home Loan Bank of Chicago—District 7

Country Bank	Aledo	Illinois.
Liberty Bank	Alton	Illinois.
The First National Bank in Amboy	Amboy	Illinois.
Apple River State Bank	Apple River	Illinois.
Meadows CU	Arlington Heights	Illinois.
Barrington Bank and Trust Company, N.A	Barrington	Illinois.
The First National Bank of Barry	Barry	Illinois.
Bank of Bourbonnais	Bourbonnais	Illinois.
1st Equity Bank Northwest	Buffalo Grove	Illinois.
Illiana Financial CU	Calumet City	Illinois.
First Southern Bank	Carbondale	Illinois.
Casey State Bank	Casey	Illinois.
Preferred Bank	Casey	Illinois.
State Bank Cerro Gordo	Cerro Gordo	Illinois.
Bank Champaign, N.A	Champaign	Illinois.
Citizens Bank of Chatsworth	Chatsworth	Illinois.
Delaware Place Bank	Chicago	Illinois.
First Nations Bank	Chicago	Illinois.
Gold Coast Bank	Chicago	Illinois.
Hyde Park Bank and Trust Company	Chicago	Illinois.
Marquette Bank	Chicago	Illinois.
Metropolitan Bank and Trust Company	Chicago	Illinois.
North Community Bank	Chicago	Illinois.
PNA Bank	Chicago	Illinois.
ShoreBank	Chicago	Illinois.
The First Commercial Bank	Chicago	Illinois.
Clay City Banking Company	Clay City	Illinois.
Peoples State Bank of Colfax	Colfax	Illinois.
Citizens State Bank of Cropsey	Cropsey	Illinois.
First National Bank of Danville	Danville	Illinois.
Resource Bank, NA	Dekalb	Illinois.
Dewey State Bank	Dewey	Illinois.
Du Quoin State Bank	Du Quion	Illinois.
Bank of Dwight	Dwight	Illinois.
DHCU Community CU	East Moline	Illinois.
First Clover Leaf Bank, FSB	Edwardsville	Illinois.
Crossroads Bank	Effingham	Illinois.
Suburban Bank & Trust Company	Elmhurst	Illinois.
Midwest Bank and Trust Company	Elmwood Park	Illinois.
Farmer City State Bank	Farmer City	Illinois.
The Fisher National Bank	Fisher	Illinois.
Flanagan State Bank	Flanagan	Illinois.

Franklin Bank	Franklin	Illinois.
Cornerstone CU	Freeport	Illinois.
Midwest Community Bank	Freeport	Illinois.
State Bank	Freeport	Illinois.
Galena State Bank & Trust Co	Galena	Illinois.
German-American State Bank	German Valley	Illinois.
The First National Bank of Gilman	Gilman	Illinois.
Grand Rivers Community Bank	Grand Chain	Illinois.
State Bank of Graymont	Graymont	Illinois.
Henry State Bank	Henry	Illinois.
First Community Bank of Hillsboro	Hillsboro	Illinois.
Charter National Bank and Trust	Hoffman Estates	Illinois.
Ipava State Bank	Ipava	Illinois.
Jacksonville SB	Jacksonville	Illinois.
Merchants and Manufacturers Bank	Joliet	Illinois.
NuMark CU	Joliet	Illinois.
Commonwealth CU	Kankakee	Illinois.
Union Federal Savings & Loan Association	Kewanee	Illinois.
Baytree National Bank and Trust Company	Lake Forest	Illinois.
Citizens State Bank	Lena	Illinois.
The State Bank of Lima	Lima	Illinois.
Brickyard Bank	Lincolnwood	Illinois.
Bank & Trust Company	Litchfield	Illinois.
Hardware State Bank	Lovington	Illinois.
First Suburban National Bank	Maywood	Illinois.
Mazon State Bank	Mazon	Illinois.
The First National Bank of McHenry	McHenry	Illinois.
MidCountry Bank	Metropolis	Illinois.
Bank of Montgomery	Montgomery	Illinois.
First National Bank of Nokomis	Nokomis	Illinois.
Nokomis SB	Nokomis	Illinois.
Plaza Bank	Norridge	Illinois.
Northbrook Bank & Trust Company	Northbrook	Illinois.
Rock River Bank	Oregon	Illinois.
First National Bank of Pana	Pana	Illinois.
The Citizens National Bank of Paris	Paris	Illinois.
Peotone Bank & Trust Company	Peotone	Illinois.
Vermilion Valley Bank	Piper City	Illinois.
Port Byron State Bank	Port Byron	Illinois.
First State Bank of Red Bud	Red Bud	Illinois.
Lincoln State Bank, S.B	Rochelle	Illinois.
MWA Bank	Rock Island	Illinois.
The First National Bank of Sandoval	Sandoval	Illinois.
Shelby County State Bank	Shelbyville	Illinois.
Spring Valley City Bank	Spring Valley	Illinois.
First National Bank in Staunton	Staunton	Illinois.
Table Grove State Bank	Table Grove	Illinois.
Capaha Bank, SB	Tamms	Illinois.
State Bank of Toulon	Toulon	Illinois.
The First National Bank in Tremont	Tremont	Illinois.
Community Bank of Trenton	Trenton	Illinois.
Allstate Bank	Vernon Hills	Illinois.
Inland Bank & Trust	Villa Park	Illinois.
North Shore Trust and Savings	Waukegan	Illinois.
Waukegan SB	Waukegan	Illinois.
Western Springs National Bank & Trust	Western Springs	Illinois.
White Hall Bank	White Hall	Illinois.
North Shore Community Bank & Trust Company	Wilmette	Illinois.
Premier Bank	Wilmette	Illinois.
First State Bank of Winchester	Winchester	Illinois.
Bank of Commerce	Wood Dale	Illinois.
Founders Bank	Worth	Illinois.
Prospect FSB	Worth	Illinois.
First Community Bank, Xenia-Flora	Xenia	Illinois.
American National Bank—Fox Cities	Appleton	Wisconsin.
Thrivent Financial Bank	Appleton	Wisconsin.
State Bank of Arcadia	Arcadia	Wisconsin.
First National Bank and Trust	Barron	Wisconsin.
American National Bank of Beaver Dam	Beaver Dam	Wisconsin.
Blackhawk State Bank	Beloit	Wisconsin.
First National Bank of Berlin	Berlin	Wisconsin.
First Business Bank—Milwaukee	Brookfield	Wisconsin.
Badger State Bank	Cassville	Wisconsin.
State Bank of Chilton	Chilton	Wisconsin.
Northwestern Bank	Chippewa Falls	Wisconsin.
Cleveland State Bank	Cleveland	Wisconsin.

DMB Community Bank	De Forest	Wisconsin.
State Bank of Drummond	Drummond	Wisconsin.
Peoples Bank	Elkhorn	Wisconsin.
American Bank	Fond du Lac	Wisconsin.
Badger Bank	Fort Atkinson	Wisconsin.
Peoples Bank of Wisconsin	Hayward	Wisconsin.
Horicon Bank	Horicon	Wisconsin.
Wolf River Community Bank	Hortonville	Wisconsin.
Blackhawk CU	Janesville	Wisconsin.
Bankers' Bank	Madison	Wisconsin.
Summit CU	Madison	Wisconsin.
Farmers State Bank	Markesan	Wisconsin.
Mid-Wisconsin Bank	Medford	Wisconsin.
Empower CU	Milwaukee	Wisconsin.
Legacy Bank	Milwaukee	Wisconsin.
Mitchell Bank	Milwaukee	Wisconsin.
Bank of Monticello	Monticello	Wisconsin.
The Bank of New Glarus	New Glarus	Wisconsin.
First National Community Bank	New Richmond	Wisconsin.
CitizensFirst CU	Oshkosh	Wisconsin.
University of Wisconsin-Oshkosh CU	Oshkosh	Wisconsin.
Palmyra State Bank	Palmyra	Wisconsin.
Bank of Poynette	Poynette	Wisconsin.
Johnson Bank	Racine	Wisconsin.
Community Bank of Northern Wisconsin	Rice Lake	Wisconsin.
Shell Lake State Bank	Shell Lake	Wisconsin.
Eagle Valley Bank, National Association	St. Croix Falls	Wisconsin.
Superior Bank	Superior	Wisconsin.
Shoreline CU	Two Rivers	Wisconsin.
InvestorsBank	Waukesha	Wisconsin.
Sunset Bank & Savings	Waukesha	Wisconsin.
Bank of Wausau	Wausau	Wisconsin.
The Equitable Bank, S.S.B	Wauwatosa	Wisconsin.
Allco CU	West Allis	Wisconsin.
Guardian CU	West Allis	Wisconsin.
Westby Co-op CU	Westby	Wisconsin.

Federal Home Loan Bank of Des Moines—District 8

BNC National Bank	Phoenix	Arizona.
Ackley State Bank	Ackley	Iowa.
Exchange State Bank	Adair	Iowa.
Farmers State Bank	Algona	Iowa.
Legacy Bank	Altoona	Iowa.
Bellevue State Bank	Bellevue	Iowa.
First State Bank	Belmond	Iowa.
Ascentra CU	Bettendorf	Iowa.
Blue Grass SB	Blue Grass	Iowa.
1st Gateway CU	Camanche	Iowa.
Bankers Trust Company, National Association	Cedar Rapids	Iowa.
Collins Community CU	Cedar Rapids	Iowa.
First FCU	Cedar Rapids	Iowa.
Village Bank & Trust Company	Cedar Rapids	Iowa.
Columbus Junction State Bank	Columbus Junction	Iowa.
Freedom Security Bank	Coralville	Iowa.
Iowa State SB	Creston	Iowa.
State SB	Creston	Iowa.
The First National Bank in Creston	Creston	Iowa.
Decorah Bank & Trust Company	Decorah	Iowa.
Dupaco Community CU	Dubuque	Iowa.
The Grundy National Bank of Grundy Center	Grundy Center	Iowa.
Security State Bank	Guttenberg	Iowa.
Hampton State Bank	Hampton	Iowa.
Hartwick State Bank	Hartwick	Iowa.
Best of Iowa Community CU	Hiawatha	Iowa.
Hiawatha Bank and Trust Company	Hiawatha	Iowa.
Community State Bank	Indianola	Iowa.
Green Belt Bank & Trust	Iowa Falls	Iowa.
Farmers State Bank	Lake View	Iowa.
Farmers State Bank	Marion	Iowa.
United Bank & Trust, NA	Marshalltown	Iowa.
Interstate Federal Savings and Loan Association	McGregor	Iowa.
First National Bank of Muscatine	Muscatine	Iowa.
Security State Bank	New Hampton	Iowa.
First Community Bank	Newell	Iowa.
Community 1st CU	Ottumwa	Iowa.

South Ottumwa SB	Ottumwa	Iowa.
Leighton State Bank	Pella	Iowa.
The City National Bank of Shenandoah	Shenandoah	Iowa.
First National Bank	Sioux Center	Iowa.
Liberty National Bank	Sioux City	Iowa.
The Security National Bank of Sioux City, Iowa	Sioux City	Iowa.
Heartland Bank	Somers	Iowa.
Farmers Trust and SB	Spencer	Iowa.
State Bank	Spencer	Iowa.
The Citizens First National Bank of Storm Lake	Storm Lake	Iowa.
Titonka SB	Titonka	Iowa.
Treynor State Bank	Treynor	Iowa.
West Chester SB	Washington	Iowa.
Community National Bank	Waterloo	Iowa.
Waukon State Bank	Waukon	Iowa.
First National Bank	Waverly	Iowa.
Peoples SB	Wellsburg	Iowa.
Farmers SB	Wever	Iowa.
1st Regents Bank	Andover	Minnesota.
Arlington State Bank	Arlington	Minnesota.
Atwater State Bank	Atwater	Minnesota.
The First National Bank of Brewster	Brewster	Minnesota.
City-County FCU	Brooklyn Center	Minnesota.
Eitzen State Bank	Caledonia	Minnesota.
Cambridge State Bank	Cambridge	Minnesota.
Peoples Bank of Commerce	Cambridge	Minnesota.
Maple Bank	Champlin	Minnesota.
State Bank of Chandler	Chandler	Minnesota.
First National Bank	Chisholm	Minnesota.
Clinton State Bank	Clinton	Minnesota.
State Bank of Cold Spring	Cold Spring	Minnesota.
First Advantage Bank	Coon Rapids	Minnesota.
Crookston National Bank	Crookston	Minnesota.
State Bank of Easton	Easton	Minnesota.
American Investors Bank and Mortgage	Eden Prairie	Minnesota.
The First National Bank of Fairfax	Fairfax	Minnesota.
Spire FCU	Falcon Heights	Minnesota.
Premier Bank Minnesota	Farmington	Minnesota.
Mainstreet Bank	Forest Lake	Minnesota.
First State Bank of Fountain	Fountain	Minnesota.
Citizens State Bank of Glenville	Glenville	Minnesota.
First Security Bank—Hendricks	Hendricks	Minnesota.
Community Pride Bank	Isanti	Minnesota.
Jackson Federal Savings and Loan Association	Jackson	Minnesota.
Janesville State Bank	Janesville	Minnesota.
Citizens State Bank of Kelliher	Kelliher	Minnesota.
Security State Bank of Kenyon	Kenyon	Minnesota.
Minnstar Bank, National Association	Lake Crystal	Minnesota.
Provincial Bank	Lakeville	Minnesota.
First Farmers & Merchants National Ban	Le Sueur	Minnesota.
Lake Community Bank	Long Lake	Minnesota.
Frandsen Bank and Trust	Lonsdale	Minnesota.
21st Century Bank	Loretto	Minnesota.
First National Bank in Mahnomen	Mahnomen	Minnesota.
Eagle Community Bank	Maple Grove	Minnesota.
Bank of Maple Plain	Maple Plain	Minnesota.
Private Bank Minnesota	Minneapolis	Minnesota.
Peoples National Bank of Mora	Mora	Minnesota.
Citizens Bank Minnesota	New Ulm	Minnesota.
Community Resource Bank	Northfield	Minnesota.
The First National Bank of Northfield	Northfield	Minnesota.
Community Development Bank, FSB	Ogema	Minnesota.
Riverview Community Bank	Otsego	Minnesota.
First National Bank of Henning (The)	Ottertail	Minnesota.
Pine River State Bank	Pine River	Minnesota.
Community Bank Plymouth	Plymouth	Minnesota.
Unity Bank North	Red Lake Falls	Minnesota.
North American Banking Company	Roseville	Minnesota.
Rushford State Bank	Rushford	Minnesota.
American Bank of St. Paul	Saint Paul	Minnesota.
Drake Bank	Saint Paul	Minnesota.
University National Bank	Saint Paul	Minnesota.
Western Bank	Saint Paul	Minnesota.
Mills Resolute Bank	Sanborn	Minnesota.
Citizens State Bank of Shakopee	Shakopee	Minnesota.
Americana Community Bank	Sleepy Eye	Minnesota.

Heritage Bank National Association	Spicer	Minnesota.
First National Bank at St. James	St. James	Minnesota.
St. Martin National Bank	St. Martin	Minnesota.
Hiway FCU	St. Paul	Minnesota.
St. Paul FCU	St. Paul	Minnesota.
St. Stephen State Bank	St. Stephen	Minnesota.
State Bank of Taunton	Taunton	Minnesota.
Profinium Financial, Inc	Truman	Minnesota.
Vermillion State Bank	Vermillion	Minnesota.
Northern State Bank of Virginia, Minnesota	Virginia	Minnesota.
First State Bank of Wabasha	Wabasha	Minnesota.
Merchants Bank, National Association	Winona	Minnesota.
First State Bank of Wyoming	Wyoming	Minnesota.
Bank of Zumbrota	Zumbrota	Minnesota.
Bank of Belton	Belton	Missouri.
Citizens Bank of Blythedale	Blythedale	Missouri.
Cabool State Bank	Cabool	Missouri.
Flowers National Bank	Cainsville	Missouri.
Alliance Bank	Cape Girardeau	Missouri.
The First National Bank of Carrollton	Carrollton	Missouri.
Freedom Bank of Southern Missouri	Cassville	Missouri.
Heritage Community Bank	Chamois	Missouri.
Mississippi County Savings & Loan Association	Charleston	Missouri.
First National Bank of St. Louis	Clayton	Missouri.
The Business Bank of St. Louis	Clayton	Missouri.
Shelter Financial Bank	Columbia	Missouri.
The Boone County National Bank of Columbia	Columbia	Missouri.
The Corder Bank	Corder	Missouri.
Mid America Bank & Trust Company	Dixon	Missouri.
Peoples Community State Ban	Doniphan	Missouri.
Citizens Bank of Edina (The)	Edina	Missouri.
Commercial Trust Company of Fayette	Fayette	Missouri.
Exchange Bank of Missouri	Fayette	Missouri.
First Commercial Bank	Gideon	Missouri.
Bank of Gower	Gower	Missouri.
Farmers Bank of Green City	Green City	Missouri.
Peoples Community Bank	Greenville	Missouri.
Bank of Hillsboro	Hillsboro	Missouri.
Home Exchange Bank	Jamesport	Missouri.
Peoples Bank of Moniteau County	Jamestown	Missouri.
Jefferson Bank of Missouri	Jefferson City	Missouri.
Peoples Bank of Wyaconda	Kahoka	Missouri.
Central Bank of Kansas City	Kansas City	Missouri.
CommunityAmerica CU	Kansas City	Missouri.
Kearney Trust Co	Kearney	Missouri.
Town & Country Bank of Missouri	La Grange	Missouri.
Goppert Financial Bank	Lathrop	Missouri.
Lawson Bank	Lawson	Missouri.
Heritage Bank of the Ozarks	Lebanon	Missouri.
United State Bank	Lewistown	Missouri.
Patriots Bank	Liberty	Missouri.
Bank of Louisiana	Louisiana	Missouri.
Mercantile Bank of Louisiana, Mo. (The)	Louisiana	Missouri.
Bank of Monticello	Monticello	Missouri.
Chester National Bank of Missouri	Perryville	Missouri.
First Missouri State Bank	Poplar Bluff	Missouri.
First State Bank of Purdy	Purdy	Missouri.
Southwest Bank of St. Louis	Saint Louis	Missouri.
Seymour Bank (The)	Seymour	Missouri.
State Bank of Slater	Slater	Missouri.
Metropolitan National Bank	Springfield	Missouri.
State Bank of Southwest Missouri	Springfield	Missouri.
Bank of St. Elizabeth	St. Elizabeth	Missouri.
Commercial Bank	St. Louis	Missouri.
St. Johns Bank and Trust Company	St. Louis	Missouri.
St. Louis Community CU	St. Louis	Missouri.
Stifel Bank & Trust	St. Louis	Missouri.
Truman Bank	St. Louis	Missouri.
American Sterling Bank	Sugar Creek	Missouri.
American Bank of Missouri	Wellsville	Missouri.
VUE Community CU	Bismarck	North Dakota.
State Bank of Bottineau	Bottineau	North Dakota.
Heartland State Bank	Edgeley	North Dakota.
Bank of Glen Ullin	Glen Ullin	North Dakota.
Bremer Bank, National Association	Grand Forks	North Dakota.
Unison Bank	Jamestown	North Dakota.

North Country Bank, National Association	McClusky	North Dakota.
First United Bank	Park River	North Dakota.
Northland Financial	Steele	North Dakota.
Peoples State Bank of Velva	Velva	North Dakota.
Peoples State Bank	Westhope	North Dakota.
Security State Bank	Wishek	North Dakota.
Dakota State Bank	Blunt	South Dakota.
Merchants State Bank	Freeman	South Dakota.
Valley Exchange Bank	Lennox	South Dakota.
First National Bank in Philip	Philip	South Dakota.
BankWest, Inc	Pierre	South Dakota.
Dakota Prairie Bank	Presho	South Dakota.
First State Bank of Roscoe	Roscoe	South Dakota.
Wells Fargo Bank, National Association	Sioux Falls	South Dakota.
American Bank & Trust	Wessington Spring	South Dakota.
First Bank of White	White	South Dakota.
First Dakota National Bank	Yankton	South Dakota.

Federal Home Loan Bank of Dallas—District 9

Summit Bank	Arkadelphia	Arkansas.
The Citizens Bank	Batesville	Arkansas.
Pinnacle Bank	Bentonville	Arkansas.
Bank of Cave City	Cave City	Arkansas.
First National Bank of Crossett	Crossett	Arkansas.
Bank of Delight	Delight	Arkansas.
DeWitt Bank and Trust Company	DeWitt	Arkansas.
Simmons First Bank of El Dorado, NA	El Dorado	Arkansas.
Bank of Arkansas, N.A	Fayetteville	Arkansas.
Twin Lakes Community Bank	Flippin	Arkansas.
Little River Bank	Lepanto	Arkansas.
Metropolitan National Bank	Little Rock	Arkansas.
Malvern National Bank	Malvern	Arkansas.
First National Bank of Mcgehee	Mcgehee	Arkansas.
Merchants & Planters Bank	Newport	Arkansas.
National Bank of Arkansas North	Little Rock	Arkansas.
Piggott State Bank	Piggott	Arkansas.
Security Bank	Stephens	Arkansas.
First National Bank of Lawrence County	Walnut Ridge	Arkansas.
First State Bank of Warren	Warren	Arkansas.
Southern Bancorp Bank, N.A	West Helena	Arkansas.
Cross County Bank	Wynne	Arkansas.
Basile State Bank	Basile	Louisiana.
American Bank & Trust Company	Covington	Louisiana.
First National Bank of Louisiana	Crowley	Louisiana.
Commercial Capital Bank	Delhi	Louisiana.
State Bank & Trust Company	Golden Meadow	Louisiana.
First Community Bank	Hammond	Louisiana.
First National Bank of Jeanerette	Jeanerette	Louisiana.
Kaplan State Bank	Kaplan	Louisiana.
Sabine State B&T Company	Many	Louisiana.
Exchange Bank & Trust Company	Natchitoches	Louisiana.
Liberty Bank and Trust Co	New Orleans	Louisiana.
West Carroll Community Bank	Oak Grove	Louisiana.
St. Landry Homestead	Opelousas	Louisiana.
Dow Louisiana FCU	Plaquemine	Louisiana.
Sicily Island State Bank	Sicily Island	Louisiana.
Carter FCU	Springhill	Louisiana.
Cross Keys Bank	St. Joseph	Louisiana.
St. Martin Bank & Trust Co	St. Martinville	Louisiana.
Concordia Bank & Trust Co	Vidalia	Louisiana.
Evangeline Bank & Trust	Ville Platte	Louisiana.
Bank of Winnfield & Trust Co	Winnfield	Louisiana.
Progressive Bank	Winnsboro	Louisiana.
Winnsboro State Bank & Trust Company	Winnsboro	Louisiana.
Community Bank, North Mississippi	Amory	Mississippi.
First Security Bank	Batesville	Mississippi.
BankPlus	Belzoni	Mississippi.
Keesler FCU	Biloxi	Mississippi.
Peoples Bank of the South	Bude	Mississippi.
Citizens Bank	Byhalia	Mississippi.
Metropolitan Bank	Crystal Springs	Mississippi.
Commercial Bank	DeKalb	Mississippi.
Community Bank	Ellisville	Mississippi.
Community Bank of Mississippi	Forest	Mississippi.
Bank of Commerce	Greenwood	Mississippi.

First State Bank	Holly Springs	Mississippi.
Merchants & Farmers Bank	Holly Springs	Mississippi.
Century Bank	Lucedale	Mississippi.
Madison County Bank	Madison	Mississippi.
Citizens National Bank of Meridian	Meridian	Mississippi.
Great Southern National Bank	Meridian	Mississippi.
Newton County Bank	Newton	Mississippi.
Oxford University Bank	Oxford	Mississippi.
The First National Bank of Oxford	Oxford	Mississippi.
Mississippi Telco FCU	Pearl	Mississippi.
Citizens Bank	Philadelphia	Mississippi.
Renasant Bank	Tupelo	Mississippi.
Otero FCU	Alamogordo	New Mexico.
Sandia Area FCU	Albuquerque	New Mexico.
My Bank	Belen	New Mexico.
The Carlsbad National Bank	Carlsbad	New Mexico.
Citizens Bank of Clovis	Clovis	New Mexico.
Four Corners Community Bank	Farmington	New Mexico.
Western Bank	Lordsburg	New Mexico.
Community Bank	Santa Fe	New Mexico.
Del Norte CU	Santa Fe	New Mexico.
AmBank	Silver City	New Mexico.
Centinel Bank of Taos	Taos	New Mexico.
First National Bank Albany/Breckenridge	Albany	Texas.
First Community Bank	Alice	Texas.
Amarillo National Bank	Amarillo	Texas.
Commercial State Bank	Andrews	Texas.
The National Bank of Andrews	Andrews	Texas.
American State Bank	Arp	Texas.
Business Bank of Texas, N.A	Austin	Texas.
Community State Bank	Austin	Texas.
Treaty Oak Bank	Austin	Texas.
The First National Bank of Bastrop	Bastrop	Texas.
Mobil Oil FCU	Beaumont	Texas.
Community National Bank	Bellaire	Texas.
Austin County State Bank	Bellville	Texas.
Brady National Bank	Brady	Texas.
Bank Brenham, NA	Brenham	Texas.
First State Bank of Brownsboro	Brownsboro	Texas.
Citizens State Bank	Buffalo	Texas.
First State Bank of Canadian, NA	Canadian	Texas.
Citizens Bank	Claude	Texas.
First Bank of West Texas	Coahoma	Texas.
Comanche National Bank (The)	Comanche	Texas.
Crosby State Bank	Crosby	Texas.
Crowell State Bank	Crowell	Texas.
Texas Heritage National Bank	Daingerfield	Texas.
Grand Bank	Dallas	Texas.
Jefferson Bank	Dallas	Texas.
Texas Capital Bank, N.A	Dallas	Texas.
Tolleson Private Bank	Dallas	Texas.
Farmers and Merchants Bank	De Leon	Texas.
Eden State Bank	Eden	Texas.
First National Bank	Edinburg	Texas.
United Bank of El Paso Del Norte	El Paso	Texas.
Ennis State Bank	Ennis	Texas.
First National Bank of Fabens	Fabens	Texas.
Town North National Bank	Farmers Branch	Texas.
Fayetteville Bank	Fayetteville	Texas.
First Security Bank, National Association	Flower Mound	Texas.
Fort Davis State Bank	Fort Davis	Texas.
EECU	Fort Worth	Texas.
Texas Gulf Bank, NA	Freeport	Texas.
Texas Brand Bank	Garland	Texas.
First National Bank in Graham	Graham	Texas.
First National Bank of Granbury	Granbury	Texas.
Grandview Bank	Grandview	Texas.
Bank of the West	Grapevine	Texas.
Peoples State Bank of Hallettsville	Hallettsville	Texas.
The First National Bank of Hebbronville	Hebbronville	Texas.
Allegiance Bank Texas	Houston	Texas.
Bank of River Oaks (The)	Houston	Texas.
Chasewood Bank	Houston	Texas.
First Community CU	Houston	Texas.
Independence Bank, National Association	Houston	Texas.
Integrity Bank, SSB	Houston	Texas.

People's Trust FCU	Houston	Texas.
Wachovia Bank, FSB	Houston	Texas.
Third Coast Bank, SSB	Humble	Texas.
First National Bank of Huntsville	Huntsville	Texas.
First State Bank	Huntsville	Texas.
Independent Bank of Texas	Irving	Texas.
First National Bank of Jasper	Jasper	Texas.
Citizens Bank	Kilgore	Texas.
Star Bank of Texas	Lake Worth	Texas.
First National Bank of Linden	Linden	Texas.
First National Bank of Livingston	Livingston	Texas.
First State Bank of Livingston	Livingston	Texas.
MyLubbockBank	Lubbock	Texas.
First State Bank of Mineral Wells	Mineral Wells	Texas.
Lone Star Bank, SSB	Moulton	Texas.
Equity Bank, SSB	Mount Vernon	Texas.
Muleshoe State Bank	Muleshoe	Texas.
Century Bank, N.A	New Boston	Texas.
Liberty Bank North	Richlan	Texas.
Pearland State Bank	Pearland	Texas.
Texas First State Bank	Riesel	Texas.
Texas State Bank	San Angelo	Texas.
Lone Star Capital Bank, N.A	San Antonio	Texas.
San Antonio FCU	San Antonio	Texas.
Security Service FCU	San Antonio	Texas.
United San Antonio Community FCU	San Antonio	Texas.
Santa Anna National Bank	Santa Anna	Texas.
First State Bank	Smithville	Texas.
Community Bank of Synder	Snyder	Texas.
First Financial Bank, N.A	Stephenville	Texas.
First National Bank	Sweetwater	Texas.
Commercial NB of Texarkana	Texarkana	Texas.
Texar FCU	Texarkana	Texas.
Texas Community Bank, NA	The Woodlands	Texas.
Randolph-Brooks FCU	Universal City	Texas.
First State Bank of Uvalde	Uvalde	Texas.
Waggoner National Bank of Vernon	Vernon	Texas.
American Bank, National Association	Waco	Texas.
Pilgram Bank Texas	Wellington	Texas.
Wellington State Bank	Wellington	Texas.
Pointwest Bank	West	Texas.
Union Square FCU	Wichita Falls	Texas.
Citizens National Bank of Wills Point	Wills Point	Texas.
The First National Bank of Winnsboro	Winnsboro	Texas.
Security State Bank (The)	Winters	Texas.

Federal Home Loan Bank of Topeka—District 10

FirstBank of Arvada	Arvada	Colorado.
FirstBank of Aurora	Aurora	Colorado.
Elevations CU	Boulder	Colorado.
FirstBank of Douglas County	Castle Rock	Colorado.
Air Academy FCU	Colorado Springs	Colorado.
American National Bank	Denver	Colorado.
United Western Bank	Denver	Colorado.
Bank of Choice	Greeley	Colorado.
First FarmBank	Greeley	Colorado.
First National Bank of Hugo	Hugo	Colorado.
FirstBank of Lakewood	Lakewood	Colorado.
Community State Bank	Lamar	Colorado.
FirstBank	Littleton	Colorado.
FirstBank of Littleton	Littleton	Colorado.
FirstBank of Summit County	Silverthorne	Colorado.
FirstBank of Wheat Ridge	Wheat Ridge	Colorado.
Colorado Community Bank	Yuma	Colorado.
Kansasland Bank	Americus	Kansas.
New Century Bank, National Association	Belleville	Kansas.
The First State Bank of Burlingame	Burlingame	Kansas.
Community National Bank	Chanute	Kansas.
Pony Express Community Bank	Elwood	Kansas.
ESB Financial	Emporia	Kansas.
Home State Bank	Erie	Kansas.
Home Bank & Trust Company of Eureka	Eureka	Kansas.
The Union State Bank of Everest	Everest	Kansas.
Signature Bank KC	Haddam	Kansas.
Farmers State Bank (The)	Holton	Kansas.

Millennium Bank	Junction City	Kansas.
Fnb & Trust Company in Larned	Larned	Kansas.
First Commerce Bank	Marysville	Kansas.
First Security Bank & Trust Company	Norton	Kansas.
The Bank	Oberlin	Kansas.
Bank of the Prairie	Olathe	Kansas.
Bank of Prairie Village	Prairie Village	Kansas.
Riley State Bank of Riley	Riley	Kansas.
First State Bank & Trust	Tonganoxie	Kansas.
Capital City Bank	Topeka	Kansas.
Core First Bank & Trust	Topeka	Kansas.
Fidelity State Bank & Trust Company	Topeka	Kansas.
Farmers & Merchants State Bank	Wakefield	Kansas.
First National Bank of Washington	Washington	Kansas.
The Wellsville Bank	Wellsville	Kansas.
Farmers State Bank of Westmoreland	Westmoreland	Kansas.
Kansas Corporate CU	Wichita	Kansas.
Meritrust CU	Wichita	Kansas.
Carson National Bank of Auburn	Auburn	Nebraska.
Farmers & Merchants State Bank	Bloomfield	Nebraska.
Nebraska State Bank & Trust Company	Broken Bow	Nebraska.
Cozad State Bank and Trust Company	Cozad	Nebraska.
Curtis State Bank	Curtis	Nebraska.
American Exchange Bank	Elmwood	Nebraska.
Exchange Bank	Gibbon	Nebraska.
First State Bank	Gothenburg	Nebraska.
City National Bank of Greeley	Greeley	Nebraska.
FirsTier Bank	Kimball	Nebraska.
Bank of Nebraska	La Vista	Nebraska.
Cornhusker Bank	Lincoln	Nebraska.
West Gate Bank	Lincoln	Nebraska.
Bank of Lindsay	Lindsay	Nebraska.
Lisco State Bank	Lisco	Nebraska.
Home State Bank	Louisville	Nebraska.
Amfirst Bank, National Association	McCook	Nebraska.
Bank of Mead	Mead	Nebraska.
Farmers & Merchants Bank	Milford	Nebraska.
Access Bank	Omaha	Nebraska.
Centris FCU	Omaha	Nebraska.
First Nebraska Educators & Employee Groups C.U	Omaha	Nebraska.
SAC FCU	Omaha	Nebraska.
UP Connection FCU	Omaha	Nebraska.
Nebraska State Bank	Oshkosh	Nebraska.
First State Bank	Randolph	Nebraska.
First State Bank	Scottsbluff	Nebraska.
The Cattle National Bank of Seward	Seward	Nebraska.
Siouxland National Bank South	Sioux City	Nebraska.
First Tri-County Bank	Swanton	Nebraska.
The First National Bank of Valentine	Valentine	Nebraska.
Charter West National Bank	West Point	Nebraska.
F&M Bank, National Association	West Point	Nebraska.
Winside State Bank	Winside	Nebraska.
FirstBank	Antlers	Oklahoma.
Ameristate Bank	Atoka	Oklahoma.
Bank of Beaver City	Beaver	Oklahoma.
Home National Bank	Blackwell	Oklahoma.
Washita State Bank	Burns Flat	Oklahoma.
Bank of Commerce	Chelsea	Oklahoma.
ACB Bank	Cherokee	Oklahoma.
Shamrock Bank, National Association	Coalgate	Oklahoma.
Bank of Commerce	Duncan	Oklahoma.
Prime Bank	Edmond	Oklahoma.
Grand FSB	Grove	Oklahoma.
First National Bank	Heavener	Oklahoma.
American Exchange Bank	Henryetta	Oklahoma.
Bank 7	Medford	Oklahoma.
The First National Bk and TC of Miami	Miami	Oklahoma.
Citizens State Bank	Morrison	Oklahoma.
Okemah National Bank	Okemah	Oklahoma.
Bank 2	Oklahoma City	Oklahoma.
FAA Employees CU	Oklahoma City	Oklahoma.
Midfirst Bank	Oklahoma City	Oklahoma.
Weokie CU	Oklahoma City	Oklahoma.
First Bank of Owasso	Owasso	Oklahoma.
First National Bank in Pawhuska	Pawhuska	Oklahoma.
First National Bank of Pawnee	Pawnee	Oklahoma.

Payne County Bank	Perkins	Oklahoma.
First National Bank, Sallisaw	Sallisaw	Oklahoma.
First National Bank of Seiling	Seiling	Oklahoma.
The Stillwater National Bank and TC	Stillwater	Oklahoma.
First State Bank	Tahlequah	Oklahoma.
The First National Bank of Thomas	Thomas	Oklahoma.
Peoples Bank	Tulsa	Oklahoma.
Summit Bank	Tulsa	Oklahoma.
Tulsa Federal Employees CU	Tulsa	Oklahoma.
FNB&T Company of Weatherford	Weatherford	Oklahoma.
First National Bank in Wewoka	Wewoka	Oklahoma.

Federal Home Loan Bank of San Francisco—District 11

First State Bank	Flagstaff	Arizona.
Arrowhead Community Bank	Glendale	Arizona.
Alliance Bank of Arizona	Phoenix	Arizona.
Arizona FCU	Phoenix	Arizona.
Goldwater Bank, N.A	Scottsdale	Arizona.
Canyon Community Bank, N.A	Tucson	Arizona.
Aea FCU	Yuma	Arizona.
Yuma Community Bank	Yuma	Arizona.
First Commercial Bank (USA)	Alhambra	California.
Omni Bank, N.A	Alhambra	California.
Premier Commercial Bank, N.A	Anaheim	California.
Foothill FCU	Arcadia	California.
Kern Schools FCU	Bakersfield	California.
Golden Valley Bank	Chico	California.
Chino Commercial Bank, N.A	Chino	California.
Vibra Bank	Chula Vista	California.
Central Valley Community Bank	Clovis	California.
Bank of Manhattan, N.A	El Segundo	California.
Coast Central CU	Eureka	California.
Fresno County FCU	Fresno	California.
Security First Bank	Fresno	California.
US Metro Bank	Garden Grove	California.
Community West Bank, N.A	Goleta	California.
First Private Bank & Trust	Granada Hills	California.
South Western FCU	La Habra	California.
California Bank of Commerce	Lafayette	California.
Farmers & Merchants Bank of Central California	Lodi	California.
American Business Bank	Los Angeles	California.
Center Bank	Los Angeles	California.
Community Commerce Bank	Los Angeles	California.
Far East National Bank	Los Angeles	California.
First Regional Bank	Los Angeles	California.
GBC International Bank	Los Angeles	California.
Nara Bank	Los Angeles	California.
Wilshire State Bank	Los Angeles	California.
Kinecta FCU	Manhattan Beach	California.
Partners Bank of California	Mission Viejo	California.
BBVA Bancomer USA	Moreno Valley	California.
Napa Community Bank	Napa	California.
Citizens Bank of Northern California	Nevada City	California.
California Republic Bank	Newport Beach	California.
Orange County Business Bank	Newport Beach	California.
Safe CU	North Highland	California.
Ventura County Business Bank	Oxnard	California.
Canyon National Bank	Palm Springs	California.
Private Bank of the Peninsula (The)	Palo Alto	California.
OneWest Bank, FSB	Pasadena	California.
Professional Business Bank	Pasadena	California.
Valley Community Bank	Pleasanton	California.
First Business Bank, National Association	Ramona	California.
American River Healthpro CU	Rancho Cordova	California.
South County Bank, N.A	Rancho Santa	California.
Embarcadero Bank	San Diego	California.
Home Bank of California	San Diego	California.
Miramar FCU	San Diego	California.
Point Loma CU	San Diego	California.
San Diego Metropolitan CU	San Diego	California.
Sunrise Bank of San Diego	San Diego	California.
Torrey Pines Bank	San Diego	California.
University & State Employees CU	San Diego	California.
JPMorgan Bank and Trust Company, National Associat	San Francisco	California.
Mission National Bank	San Francisco	California.

Northeast Community FCU	San Francisco	California.
Oceanic Bank	San Francisco	California.
Mega Bank	San Gabriel	California.
Alliance CU	San Jose	California.
Coast National Bank	San Luis Obis	California.
San Luis Trust Bank, FSB	San Luis Obis	California.
Discovery Bank	San Marcos	California.
American Security Bank	Santa Ana	California.
Orange Countys CU	Santa Ana	California.
Bridge Bank of Silicon Valley, NA	Santa Clara	California.
Silicon Valley Bank	Santa Clara	California.
Bank of Santa Clarita	Santa Clarita	California.
Community Bank of Santa Maria	Santa Maria	California.
Pacific Western Bank	Santa Monica	California.
Pacific State Bank	Stockton	California.
Sunwest Bank	Tustin	California.
Affinity Bank	Ventura	California.
County Commerce Bank	Ventura	California.
Ventura County CU	Ventura	California.
Suncrest Bank	Visalia	California.
Black Mountain Community Bank	Henderson	Nevada.
Bank of George	Las Vegas	Nevada.
Bank of Las Vegas	Las Vegas	Nevada.
Red Rock Community Bank	Las Vegas	Nevada.
Sun West Bank	Las Vegas	Nevada.
Town & Country Bank	Las Vegas	Nevada.
Heritage Bank of Nevada	Reno	Nevada.

Federal Home Loan Bank of Seattle—District 12

Denali State Bank	Fairbanks	Alaska.
Tongass FCU	Ketchikan	Alaska.
Native American Bank, National Association	Denver	Colorado.
Aloha Pacific FCU	Honolulu	Hawaii.
Hawaii FCU	Honolulu	Hawaii.
Hawaii Schools FCU	Honolulu	Hawaii.
Idaho Trust Bank	Boise	Idaho.
Western Capital Bank	Boise	Idaho.
East Idaho CU	Idaho Falls	Idaho.
Citizens Community Bank	Pocatello	Idaho.
Rocky Mountain Bank	Billings	Montana.
Valley FCU of Montana	Billings	Montana.
Mountain West Bank of Helena, NA	Helena	Montana.
Three Rivers Bank of Montana	Kalispell	Montana.
West One Bank	Kalispell	Montana.
Western Security Bank	Kalispell	Montana.
First Bank of Montana	Lewistown	Montana.
Bitterroot Valley Bank	Lolo	Montana.
Missoula FCU	Missoula	Montana.
Flint Creek Valley Bank	Philipsburg	Montana.
Farmers State Bank	Victor	Montana.
Western Bank of Wolf Point	Wolf Point	Montana.
Willamette Community Bank	Albany	Oregon.
Oregon Community CU	Coquille	Oregon.
Pacific Crest FCU	Klamath Falls	Oregon.
Bank of Oswego (The)	Lake Oswego	Oregon.
Northwest Bank Lake	Oswego	Oregon.
Rogue FCU	Medford	Oregon.
Oregon Coast Bank	Newport	Oregon.
Capital Pacific Bank	Portland	Oregon.
Commerce Bank of Oregon (The)	Portland	Oregon.
Pacific NW FCU	Portland	Oregon.
Marion and Polk Schools CU	Salem	Oregon.
Republic Bank, Inc	Bountiful	Utah.
First National Bank of Layton	Layton	Utah.
Capmark Bank	Midvale	Utah.
Frontier Bank, FSB	Park City	Utah.
Capital Community Bank	Provo	Utah.
SunFirst Bank	Saint George	Utah.
BMW Bank of North America	Salt Lake City	Utah.
Celtic Bank Corporation	Salt Lake City	Utah.
Deseret First CU	Salt Lake City	Utah.
Utah Central CU	Salt Lake City	Utah.
Wells Fargo Bank Northwest, NA	Salt Lake City	Utah.
Wright Express Financial Service Corp	Salt Lake City	Utah.
The Village Bank	St. George	Utah.

Anchor Mutual SB	Aberdeen	Washington.
The Bank of the Pacific	Aberdeen	Washington.
Eastside Commercial Bank, NA	Bellevue	Washington.
North Coast CU	Bellingham	Washington.
Whatcom Educational CU	Bellingham	Washington.
Lacamas Community CU	Camas	Washington.
Security State Bank	Centralia	Washington.
North Cascades National Bank	Chelan	Washington.
Bank of Whitman	Colfax	Washington.
America's CU, a FCU	Fort Lewis	Washington.
Islanders Bank	Friday Harbor	Washington.
Community First Bank	Kennewick	Washington.
Pacific Crest SB	Lynnwood	Washington.
Prime Pacific Bank, NA	Lynnwood	Washington.
1st Security Bank of Washington	Mountlake Terrace	Washington.
Fortune Bank	Seattle	Washington.
HomeStreet Bank	Seattle	Washington.
Pacific International Bank	Seattle	Washington.
Plaza Bank	Seattle	Washington.
Regal Financial Bank	Seattle	Washington.
Seattle Metropolitan CU	Seattle	Washington.
Sound Community Bank	Seattle	Washington.
Global CU	Spokane	Washington.
O Bee CU	Tumwater	Washington.
First Independent Bank	Vancouver	Washington.
Yakima National Bank	Yakima	Washington.
Yakima Valley CU	Yakima	Washington.
Security State Bank	Basin	Wyoming.
Cheyenne State Bank	Cheyenne	Wyoming.
First National Bank of Wyoming	Laramie	Wyoming.
UniWyo FCU	Laramie	Wyoming.
The Rawlins National Bank	Rawlins	Wyoming.
First State Bank	Wheatland	Wyoming.

II. Public Comments

To encourage the submission of public comments on the community support performance of Bank members, on or before July 24, 2009, each Bank will notify its Advisory Council and nonprofit housing developers, community groups, and other interested parties in its district of the members selected for community support review in the 2008–09 sixth quarter review cycle. 12 CFR 944.2(b)(2)(ii). In reviewing a member for community support compliance, FHFA will consider any public comments it has received concerning the member. 12 CFR 944.2(d). To ensure consideration by FHFA, comments concerning the community support performance of members selected for the 2008–09 sixth quarter review cycle must be delivered to FHFA, either by hard-copy mail at the Federal Housing Finance Agency, Housing Mission and Goals, 1625 Eye Street, NW., Washington, DC 20006, or by electronic mail at *LENORA.MORTON@FHFA.GOV* on or before the August 31, 2009 deadline for submission of Community Support Statements.

Dated: July 7, 2009.

James B. Lockhart III,

Director, Federal Housing Finance Agency.

[FR Doc. E9–16390 Filed 7–9–09; 8:45 am]

BILLING CODE 8070–01–P

DEPARTMENT OF HEALTH AND HUMAN SERVICES

[Document Identifier OS–0990–New]

Agency Information Collection Request. 60-Day Public Comment Request

AGENCY: Office of the Secretary, HHS.

In compliance with the requirement of section 3506(c)(2)(A) of the Paperwork Reduction Act of 1995, the Office of the Secretary (OS), Department of Health and Human Services, is publishing the following summary of a proposed information collection request for public comment. Interested persons are invited to send comments regarding this burden estimate or any other aspect of this collection of information, including any of the following subjects: (1) The necessity and utility of the proposed information collection for the proper performance of the agency's functions; (2) the accuracy of the estimated burden; (3) ways to enhance the quality, utility, and clarity of the information to be collected; and (4) the use of automated collection techniques or other forms of information technology to minimize the information collection burden.

To obtain copies of the supporting statement and any related forms for the proposed paperwork collections referenced above, e-mail your request, including your address, phone number, OMB number, and OS document identifier, to *Sherette.funncoleman@hhs.gov*, or call the Reports Clearance Office on (202) 690–6162. Written comments and recommendations for the proposed information collections must be directed to the OS Paperwork Clearance Officer at the above e-mail address within 60 days.

Proposed Project: Multidisciplinary Health Care Models for Women Sustainability Assessment Survey—OMB No. 0990–NEW—Office of the Secretary/Office on Women's Health (OWH).

Abstract: The goal of this assessment is to identify and measure the key components of sustainability of federally funded programs. Specifically, this assessment will examine the extent to which organizations previously funded under OWH's Multidisciplinary Health Models for Women (MHMW) effort have sustained or enhanced the core components of the program after OWH funding ended, and identify factors that have facilitated or inhibited sustainability at MHMW program sites.

This assessment is designed to collect data from 48 MHMW program sites through four methods: (1) Abstraction of administrative data from grant and contract documents to establish a baseline understanding of each site, (2)

a Web-based survey of key program staff at each site to determine the extent to which the five core components were implemented, (3) key informant interviews with core program staff, and/or other types of staff as necessary, to better understand the factors that influenced implementation and sustainability, and (4) in-person visits to 12 sites to collect in-depth information from additional types of staff, community partners, and clients. OWH is seeking approval from the Office of Management and Budget (OMB) for the Web-based survey and the key informant interviews.

ESTIMATED ANNUALIZED BURDEN TABLE

Type of respondent	Form	Number of respondents	Number of responses per respondent	Average burden per response (minutes)	Total burden hours
Key Site Staff	Web-based survey (Attachment A)	48	1	95/60	76
Site Staff and Community Partners.	Telephone Interview (Attachment B)	48	1	105	84
Total					160

Seleda Perryman,

Paperwork Reduction Act Reports Clearance Officer, Office of the Secretary.

[FR Doc. E9–16377 Filed 7–9–09; 8:45 am]

BILLING CODE 4150–33–P

DEPARTMENT OF HEALTH AND HUMAN SERVICES

[Document Identifier: OS–0990–New; 30-day notice]

Agency Information Collection Request. 30-Day Public Comment Request

AGENCY: Office of the Secretary, HHS.

In compliance with the requirement of section 3506(c)(2)(A) of the Paperwork Reduction Act of 1995, the Office of the Secretary (OS), Department of Health and Human Services, is publishing the following summary of a proposed collection for public comment. Interested persons are invited to send comments regarding this burden estimate or any other aspect of this collection of information, including any of the following subjects: (1) The necessity and utility of the proposed information collection for the proper performance of the agency's functions; (2) the accuracy of the estimated burden; (3) ways to enhance the quality, utility, and clarity of the information to be collected; and (4) the use of automated collection techniques or other forms of information technology to minimize the information collection burden.

To obtain copies of the supporting statement and any related forms for the proposed paperwork collections referenced above, e-mail your request, including your address, phone number, OMB number, and OS document identifier, to *Sherette.funncoleman@hhs.gov*, or call the Reports Clearance Office on (202) 690–5683. Send written comments and recommendations for the proposed information collections within 30 days of this notice directly to the OS OMB Desk Officer; faxed to OMB at 202–395–5806.

Proposed Project: Evaluation of the Parents Speak Up National Campaign (PSUNC): Parent Web site Survey. OMB No. 0990–NEW—Office of Public Health and Science, Office of Population Affairs, Office of Adolescent Pregnancy Programs.

Abstract: An on-line survey will take place in Fall 2009. The respondents will be 800 parents of children ages 10–14 drawn from an established online survey panel whose parental status and age of children are known. The survey will take 30 minutes which includes time spent visiting a Web site. Parents will self-administer the questionnaire at home on personal computers. The specific aim of this study is to determine the usefulness of the content and Web site features of the *4parents.gov* Web site by measuring parents' attitudes to, reactions to, and receptivity to the Web site and to specific sections of it. One hundred mothers of each of four groups of children: boys 10–12 and 13–14, and girls 10–12 and 13–14 (for a total of 400 mothers), and 100 fathers of the same four groups of children (for a total of 400 fathers).

ESTIMATED ANNUALIZED BURDEN TABLE

Forms	Type of respondent	Number of respondents	Number of responses per respondent	Average burden hours per response	Total burden hours
Fall 2009 Parent Web site Survey	Mothers of children ages 10–14	400	1	30/60	200
Fall 2009 Parent Web site Survey	Fathers of children ages 10–14	400	1	30/60	200
Total					400

Seleda Perryman,

Paperwork Reduction Act Reports Clearance Officer, Office of the Secretary.

[FR Doc. E9–16381 Filed 7–9–09; 8:45 am]

BILLING CODE 4150–30–P

DEPARTMENT OF HEALTH AND HUMAN SERVICES

National Institutes of Health

Proposed Collection; Comment Request; The Sister Study: A Prospective Study of the Genetic and Environmental Risk Factors for Breast Cancer

SUMMARY: In compliance with the requirement of section 3506(c)(2)(A) of the Paperwork Reduction Act of 1995, for opportunity for public comment on proposed data collection projects, the National Institute of Environmental Health Sciences (NIEHS), the National Institutes of Health (NIH) will publish periodic summaries of proposed projects to be submitted to the Office of Management and Budget (OMB) for review and approval.

Proposed Collection: Title: The Sister Study: A Prospective Study of the Genetic and Environmental Risk Factors for Breast Cancer. *Type of Information Collection Request:* Revision of OMB No. 0925–0522 and expiration date 30 September 2009. *Need and Use of Information Collection:* The purpose of the Sister Study is to study genetic and environmental risk factors for the development of breast cancer in a high-risk cohort of sisters of women who have had breast cancer. In the United States, approximately 192,370 new cases of invasive breast cancer are anticipated in 2009. The etiology of breast cancer is complex, with both genetic and environmental factors likely playing a role. Environmental risk factors, however, have been difficult to identify. By focusing on genetically susceptible subgroups, more precise estimates of the contribution of environmental and other non-genetic factors to disease risk may be possible. Sisters of women with breast cancer are one group at increased risk for breast cancer; we would expect at least 2 times as many breast cancers to accrue in a cohort of sisters as would accrue in a cohort identified through random sampling or other means. In addition, a cohort of sisters should be enriched with regard to the prevalence of relevant genes and/or exposures, further enhancing the ability to detect gene-environment interactions. Sisters of women with breast cancer will also be at increased risk for ovarian cancer and possibly for other hormonally mediated diseases. We have enrolled a cohort of 50,000 women who have not had breast cancer. Recruitment took place from August 2003 through July 2009. We estimate that in the cohort of 50,000 sisters, aged 35–74 at enrollment, approximately 300 new cases of breast cancer will be diagnosed during each year of follow-up. *Frequency of Response:* For the remainder of the study, women will be contacted once each year to update contact information and health status (10 minutes per response); and asked to complete short (60–75 minutes, total) follow-up interviews or questionnaires every two to three years. Women diagnosed with breast cancer or other health outcomes of interest are asked to provide additional information about their diagnosis (20 minutes per response) and their doctors will be contacted to provide medical records related to diagnosis and treatments (15 minutes per response). *Affected Public:* Study participants; medical office staff. *Type of Respondents:* Participants enrolled in high-risk cohort study of risk factors for breast cancer. The annual reporting burden is as follows: *Estimated Number of Respondents:* 50,000 study participants and 2100 medical office staff. *Estimated Number of Responses per Respondent:* See table below:

Activity (3–yrs)	Estimated number of respondents	Estimated responses per respondent	Average burden hours per response	Estimated total burden hours requested
Annual Updates	50,000	1	0.17	8,500
Biennial Follow-Up Questionnaire	50,000	1	1.25	62,500
Incident BC Case Follow-Up	1800	1	0.33	594
Incident Other Case Follow-Up	300	1	0.33	99
Incident Case Medical Office Contact	2100	1	0.25	525
Total				72,218

Average Burden Hours per Response: 0.7 hour; and *Estimated Total Burden Hours Requested:* 72,218 (over 3 years). The average annual burden hours requested is 24,073. The annualized cost to respondents is estimated at $14 (assuming $20 hourly wage × 0.7 hour). There are no Capital Costs to report. There are no Operating or Maintenance Costs to report.

Request for Comments: Written comments and/or suggestions from the public and affected agencies are invited on one or more of the following points: (1) Whether the proposed collection of information is necessary for the proper performance of the function of the agency, including whether the information will have practical utility; (2) The accuracy of the agency's estimate of the burden of the proposed collection of information, including the validity of the methodology and assumptions used; (3) Ways to enhance the quality, utility, and clarity of the information to be collected; and (4) Ways to minimize the burden of the collection of information on those who are to respond, including the use of appropriate automated, electronic, mechanical, or other technological collection techniques or other forms of information technology.

FOR FURTHER INFORMATION CONTACT: To request more information on the project or to obtain a copy of the data collection plans and instruments, contact: Dr. Dale P. Sandler, Chief, Epidemiology Branch, NIEHS, Rall Building A3–05, PO Box 12233, Research Triangle Park, NC 27709 or call non-toll-free number (919) 541–4668 or E-mail your request, including your address to: ''*sandler@niehs.nih.gov.*''

Comments Due Date: Comments regarding this information collection are best assured of having their full effect if received within 60 days of the date of this publication.

Dated: July 1, 2009.

Marc S. Hollander,

Associate Director for Management.

[FR Doc. E9–16372 Filed 7–9–09; 8:45 am]

BILLING CODE 4140–01–P

DEPARTMENT OF HEALTH AND HUMAN SERVICES

Food and Drug Administration

[Docket No. FDA–2009–N–0291]

Agency Information Collection Activities; Proposed Collection; Comment Request; Infectious Disease Issues in Xenotransplantation

AGENCY: Food and Drug Administration, HHS.

ACTION: Notice.

SUMMARY: The Food and Drug Administration (FDA) is announcing an opportunity for public comment on the proposed collection of certain information by the agency. Under the Paperwork Reduction Act of 1995 (the PRA), Federal agencies are required to publish notice in the **Federal Register** concerning each proposed collection of information, including each proposed extension of an existing collection of information, and to allow 60 days for public comment in response to this notice. This notice solicits comments on the collection of information contained in the Public Health Service (PHS) guideline entitled ''PHS Guideline on Infectious Disease Issues in Xenotransplantation'' dated January 19, 2001.

DATES: Submit written or electronic comments on the collection of information by September 8, 2009.

ADDRESSES: Submit electronic comments on the collection of information to *http://www.regulations.gov*. Submit written comments on the collection of information to the Division of Dockets Management (HFA–305), Food and Drug Administration, 5630 Fishers Lane, rm. 1061, Rockville, MD 20852. All comments should be identified with the docket number found in brackets in the heading of this document.

FOR FURTHER INFORMATION CONTACT: Jonna Capezzuto, Office of Information Management (HFA–710), Food and Drug Administration, 5600 Fishers Lane, Rockville, MD 20857, 301–796–3794.

SUPPLEMENTARY INFORMATION: Under the PRA (44 U.S.C. 3501–3520), Federal agencies must obtain approval from the Office of Management and Budget (OMB) for each collection of information they conduct or sponsor. ''Collection of information'' is defined in 44 U.S.C. 3502(3) and 5 CFR 1320.3(c) and includes agency requests or requirements that members of the public submit reports, keep records, or provide information to a third party. Section 3506(c)(2)(A) of the PRA (44 U.S.C. 3506(c)(2)(A)) requires Federal agencies to provide a 60-day notice in the **Federal Register** concerning each proposed collection of information, including each proposed extension of an existing collection of information, before submitting the collection to OMB for approval. To comply with this requirement, FDA is publishing notice of the proposed collection of information set forth in this document.

With respect to the following collection of information, FDA invites comments on these topics: (1) Whether the proposed collection of information is necessary for the proper performance of FDA's functions, including whether the information will have practical utility; (2) the accuracy of FDA's estimate of the burden of the proposed collection of information, including the validity of the methodology and assumptions used; (3) ways to enhance the quality, utility, and clarity of the information to be collected; and (4) ways to minimize the burden of the collection of information on respondents, including through the use of automated collection techniques, when appropriate, and other forms of information technology.

Infectious Disease Issues in Xenotransplantation (OMB Control Number 0910–0456)—Extension

The statutory authority to collect this information is provided under sections 351 and 361 of the PHS Act (42 U.S.C. 262 and 264) and the provisions of the Federal Food, Drug, and Cosmetic Act that apply to drugs (21 U.S.C. 301 *et seq.*). The PHS guideline recommends procedures to diminish the risk of transmission of infectious agents to the xenotransplantation product recipient and to the general public. The PHS guideline is intended to address public health issues raised by xenotransplantation, through identification of general principles of prevention and control of infectious diseases associated with xenotransplantation that may pose a hazard to the public health. The collection of information described in this guideline is intended to provide to sponsors general guidance on the following topics: (1) The development of xenotransplantation clinical protocols; (2) the preparation of submissions to FDA; and (3) the conduct of xenotransplantation clinical trials. Also, the collection of information will help ensure that the sponsor maintains important information in a cross-referenced system that links the relevant records of the xenotransplantation product recipient, xenotransplantation product, source animal(s), animal procurement center, and significant nosocomial exposures. The PHS guideline describes an occupational health service program for the protection of health care workers involved in xenotransplantation procedures, caring for xenotransplantation product recipients, and performing associated laboratory testing. The guideline also describes a public health need for a national xenotransplantation database, which is currently under development by the PHS. The PHS guideline is intended to protect the public health and to help ensure the safety of using xenotransplantation products in humans by preventing the introduction, transmission, and spread of infectious diseases associated with xenotransplantation.

The PHS guideline also recommends that certain specimens and records be maintained for 50 years beyond the date of the xenotransplantation. These include: (1) Records linking each xenotransplantation product recipient with relevant health records of the source animal, herd or colony, and the specific organ, tissue, or cell type included in or used in the manufacture of the product (3.2.7.1); (2) aliquots of serum samples from randomly selected animal and specific disease investigations (3.4.3.1); (3) source animal biological specimens designated for PHS use (3.7.1); animal health records (3.7.2), including necropsy results (3.6.4); and (4) recipients' biological specimens (4.1.2). The retention period is intended to assist health care practitioners and officials in surveillance and in tracking the source of an infection, disease, or illness that might emerge in the recipient, the source animal, or the animal herd or colony after a xenotransplantation.

The recommendation for maintaining records for 50 years is based on clinical experience with several human viruses that have presented problems in human to human transplantation and are therefore thought to share certain characteristics with viruses that may pose potential risks in xenotransplantation. These characteristics include long latency periods and the ability to establish persistent infections. Several also share the possibility of transmission among individuals through intimate contact with human body fluids. Human immunodeficiency virus (HIV) and Human T-lymphotropic virus are human retroviruses. Retroviruses contain ribonucleic acid that is reverse-transcribed into deoxyribonucleic acid (DNA) using an enzyme provided by the virus and the human cell machinery.

That viral DNA can then be integrated into the human cellular DNA. Both viruses establish persistent infections and have long latency periods before the onset of disease, 10 years and 40 to 60 years, respectively. The human hepatitis viruses are not retroviruses, but several share with HIV the characteristic that they can be transmitted through body fluids, can establish persistent infections, and have long latency periods, e.g., approximately 30 years for Hepatitis C.

In addition, the PHS guideline recommends that a record system be developed that allows easy, accurate, and rapid linkage of information among the specimen archive, the recipient's medical records, and the records of the source animal for 50 years. The development of such a record system is a one-time burden. Such a system is intended to cross-reference and locate relevant records of recipients, products, source animals, animal procurement centers, and nosocomial exposures.

Respondents to this collection of information are the sponsors of clinical studies of investigational xenotransplantation products under investigational new drug applications (INDs) and xenotransplantation product procurement centers, referred to as source animal facilities. There are an estimated 12 respondents who are sponsors of INDs that include protocols for xenotransplantation in humans. Other respondents for this collection of information are an estimated 18 source animal facilities which provide source xenotransplantation product material to sponsors for use in human xenotransplantation procedures. These 18 source animal facilities keep medical records of the herds/colonies as well as the medical records of the individual source animal(s). The total annual reporting and recordkeeping burden is estimated to be approximately 156 hours. The burden estimates are based on FDA's records of xenotransplantation-related INDs and estimates of time required to complete the various reporting and recordkeeping tasks described in the guideline. FDA does not expect the level of clinical studies using xenotransplantation to increase significantly in the next few years.

FDA is requesting an extension of OMB approval for the following reporting and recordkeeping recommendations in the PHS guideline:

TABLE 1.—REPORTING RECOMMENDATIONS

PHS Guideline Section	Description
3.2.7.2	Notify sponsor or FDA of new archive site when the source animal facility or sponsor ceases operations.
3.4	Standard operating procedures (SOPs) of source animal facility should be available to review bodies.
3.5.1	Include increased infectious risk in informed consent if source animal quarantine period of 3 weeks is shortened.
3.5.4	Sponsor to make linked records described in section 3.2.7 available for review.
3.5.5	Source animal facility to notify clinical center when infectious agent is identified in source animal or herd after xenotransplantation product procurement.

TABLE 2.—RECORDKEEPING RECOMMENDATIONS

PHS Guideline Section	Description
3.2.7	Establish records linking each xenotransplantation product recipient with relevant records.
4.3	Sponsor to maintain cross-referenced system that links all relevant records (recipient, product, source animal, animal procurement center, and nosocomial exposures).
3.4.2	Document results of monitoring program used to detect introduction of infectious agents which may not be apparent clinically.
3.4.3.2	Document full necropsy investigations including evaluation for infectious etiologies.
3.5.1	Justify shortening a source animal's quarantine period of 3 weeks prior to xenotransplantation product procurement.
3.5.2	Document absence of infectious agent in xenotransplantation product if its presence elsewhere in source animal does not preclude using it.
3.5.4	Add summary of individual source animal record to permanent medical record of the xenotransplantation product recipient.
3.6.4	Document complete necropsy results on source animals (50-year record retention).
3.7	Link xenotransplantation product recipients to individual source animal records and archived biologic specimens.
4.2.3.2	Record base-line sera of xenotransplantation health care workers and specific nosocomial exposure.
4.2.3.3 and 4.3.2	Keep a log of health care workers' significant nosocomial exposure(s).
4.3.1	Document each xenotransplant procedure.
5.2	Document location and nature of archived PHS specimens in health care records of xenotransplantation product recipient and source animal.

FDA estimates the burden of this collection of information as follows:

TABLE 3.—ESTIMATED ANNUAL REPORTING BURDEN[1]

PHS Guideline Section	No. of Respondents	Annual Frequency per Response	Total Annual Responses	Hours per Response	Total Hours
3.2.7.2[2]	1	1	1	0.5	0.5
3.4[3]	12	0.17	2	0.08	0.16
3.5.1[4]	12	0.08	(0–1) 1	0.25	0.25
3.5.4[5]	12	1	12	0.5	6.0
3.5.5[4]	18	0.06	(0–1) 1	0.2	0.2
Total					7.11

[1] There are no capital costs or operating and maintenance costs associated with this collection of information.
[2] No animal facility or sponsor has ceased operations in the last 3 years, however, we are using 1 for estimation purposes.
[3] FDA's records indicate that an average of two INDs are expected to be submitted per year.
[4] To our knowledge, has not occurred in the past 3 years and is expected to continue to be a rare occurrence.
[5] Based on an estimate of 36 patients treated over a 3-year period, the average number of xenotransplantation product recipients per year is estimated to be 12.

TABLE 4.—ESTIMATED ANNUAL RECORDKEEPING BURDEN[1]

PHS Guideline Section	No. of Recordkeepers	Annual Frequency per Recordkeeping	Total Annual Records	Hours per Record	Total Hours
3.2.7[2]	1	1	1	16	16.0
4.3[3]	12	1	12	0.83	9.96
3.4.2[4]	12	11	132	0.25	33.0
3.4.3.2[5]	18	4	72	0.3	21.6
3.5.1[6]	12	0.08	(0–1) 1	0.5	0.5
3.5.2[6]	12	0.08	(0–1) 1	0.25	0.25
3.5.4	12	1	12	0.17	2.04
3.6.4[7]	12	2	24	0.25	6.0
3.7[7]	18	1.33	24	0.08	1.92
4.2.3.2[8]	12	25	300	0.17	51.0
4.2.3.2[6]	12	0.08	(0–1) 1	0.17	0.17
4.2.3.3 and 4.3.2[6]	12	0.08	(0–1) 1	0.17	0.17
4.3.1	12	1	12	0.25	3.0
5.2[9]	12	3	36	0.08	2.88
Total					148.49

[1] There are no capital costs or operating and maintenance costs associated with this collection of information.
[2] A one-time burden for new respondents to set up a recordkeeping system linking all relevant records. FDA estimates one new sponsor annually.
[3] FDA estimates there is minimal recordkeeping burden associated with maintaining the record system.
[3] FDA estimates there is minimal recordkeeping burden associated with maintaining the record system.
[4] Monitoring for sentinel animals (subset representative of herd) plus all source animals. There are approximately 6 sentinel animals per herd x 1 herd per facility x 18 facilities = 108 sentinel animals. There are approximately 24 source animals per year (see footnote 7 of this table); 108 + 24 = 132 monitoring records to document.
[5] Necropsy for animal deaths of unknown cause estimated to be approximately 4 per herd per year x 1 herd per facility x 18 facilities = 72.
[6] Has not occurred in the past 3 years and is expected to continue to be a rare occurrence.
[7] On average two source animals are used for preparing xenotransplantation product material for one recipient. The average number of source animals is 2 source animals per recipient x 12 recipients annually = 24 source animals per year. (See footnote 5 of table 3 of this document.)
[8] FDA estimates there are approximately 12 clinical centers doing xenotransplantation procedures x approximately 25 health care workers involved per center = 300 health care workers.
[9] Twenty-four source animal records + 12 recipient records = 36 total records.

Because of the potential risk for cross-species transmission of pathogenic persistent virus, the guideline recommends that health records be retained for 50 years. Because these records are medical records, the retention of such records for up to 50 years is not information subject to the PRA (5 CFR 1320.3(h)(5)). Also, because of the limited number of clinical studies with small patient populations, the number of records is expected to be insignificant at this time.

Information collections in this guideline not included in tables 1 through 4 of this document can be found under existing regulations and approved under the OMB control numbers as follows: (1) ''Current Good Manufacturing Practice for Finished Pharmaceuticals,'' 21 CFR 211.1 through 211.208, approved under OMB control number 0910–0139; (2) ''Investigational New Drug Application,'' 21 CFR 312.1 through 312.160, approved under OMB control number 0910–0014; and (3) information included in a license application, 21 CFR 601.2, approved under OMB control number 0910–0338. (Although it is possible that a xenotransplantation product may not be regulated as a biological product (e.g., it may be regulated as a medical device), FDA believes, based on its knowledge and experience with xenotransplantation, that any xenotransplantation product subject to FDA regulation within the next 3 years will most likely be regulated as a biological product.) However, FDA recognized that some of the information collections go beyond approved collections; assessments for these burdens are included in tables 1 through 4.

In table 5 of this document, FDA identifies those collection of information activities that are already encompassed by existing regulations or are consistent with voluntary standards which reflect industry's usual and customary business practice.

TABLE 5.—COLLECTION OF INFORMATION REQUIRED BY CURRENT REGULATIONS AND STANDARDS

PHS Guideline Section	Description of Collection of Information Activity	21 CFR Section (unless otherwise stated)
2.2.1	Document off-site collaborations	312.52
2.5	Sponsor ensures counseling patient + family + contacts	312.62(c)
3.1.1 and 3.1.6	Document well-characterized health history and lineage of source animals	312.23(a)(7)(a) and 211.84
3.1.8	Registration with and import permit from the Centers for Disease Control and Prevention	42 CFR 71.53
3.2.2	Document collaboration with accredited microbiology labs	312.52
3.2.3	Procedures to ensure the humane care of animals	9 CFR parts 1, 2, and 3 and PHS Policy[1]
3.2.4	Procedures consistent for accreditation by the Association for Assessment and Accreditation of Laboratory Animal Care International (AAALAC International) and consistent with the National Research Council's (NRC) Guide	AAALAC International Rules of Accreditation[2] and NRC Guide[3]
3.2.5, 3.4, and 3.4.1	Herd health maintenance and surveillance to be documented, available, and in accordance with documented procedures; record standard veterinary care	211.100 and 211.122
3.2.6	Animal facility SOPs	PHS Policy[1]
3.3.3	Validate assay methods	211.160(a)
3.6.1	Procurement and processing of xenografts using documented aseptic conditions	211.100 and 211.122
3.6.2	Develop, implement, and enforce SOP's for procurement and screening processes	211.84(d) and 211.122(c)
3.6.4	Communicate to FDA animal necropsy findings pertinent to health of recipient	312.32(c)
3.7.1	PHS specimens to be linked to health records; provide to FDA justification for types of tissues, cells, and plasma, and quantities of plasma and leukocytes collected	312.23(a)(6)
4.1.1	Surveillance of xenotransplant recipient; sponsor ensures documentation of surveillance program life-long (justify >2 yrs.); investigator case histories (2 yrs. After investigation is discontinued)	312.23(a)(6)(iii)(*f*) and (a)(6)(iii)(*g*), and 312.62(b) and (c)
4.1.2	Sponsor to justify amount and type of reserve samples	211.122
4.1.2.2	System for prompt retrieval of PHS specimens and linkage to medical records (recipient and source animal)	312.57(a)
4.1.2.3	Notify FDA of a clinical episode potentially representing a xenogeneic infection	312.32
4.2.2.1	Document collaborations (transfer of obligation)	312.52

TABLE 5.—COLLECTION OF INFORMATION REQUIRED BY CURRENT REGULATIONS AND STANDARDS—Continued

PHS Guideline Section	Description of Collection of Information Activity	21 CFR Section (unless otherwise stated)
4.2.3.1	Develop educational materials (sponsor provides investigators with information needed to conduct investigation properly)	312.50
4.3	Sponsor to keep records of receipt, shipment, and disposition of investigative drug; investigator to keep records of case histories	312.57 and 312.62(b)

[1] The "Public Health Service Policy on Humane Care and Use of Laboratory Animals" (*http://www.grants.nih.gov/grants/olaw/references/phspol.htm*). (FDA has verified the Web site address, but is not responsible for subsequent changes to the Web site address after this document publishes in the **Federal Register**.)

[2] AAALAC International Rules of Accreditation (*http://www.aaalac.org/accreditation/rules.cfm*). (FDA has verified the Web site address, but is not responsible for subsequent changes to the Web site address after this document publishes in the **Federal Register**.)

[3] The NRC's "Guide for the Care and Use of Laboratory Animals" (1996).

Dated: July 2, 2009.

Jeffrey Shuren,

Associate Commissioner for Policy and Planning.

[FR Doc. E9–16334 Filed 7–9–09; 8:45 am]

BILLING CODE 4160–01–S

DEPARTMENT OF HEALTH AND HUMAN SERVICES

Administration for Children and Families

Submission for OMB Review; Comment Request

Title: Tribal TANF Data Report, TANF Annual Report, and Reasonable Cause/Corrective Action Documentation Process—Final.

OMB No.: 0970–0215.

Description: 42 U.S.C. 612 (section 412 of the Social Security Act as amended by Public Law 104–193, the Personal Responsibility and Work Opportunity Reconciliation Act of 1996 (PRWORA), mandates that federally recognized Indian Tribes with an approved Tribal TANF program collect and submit to the Secretary of the Department of Health and Human Services data on the recipients served by the Tribes programs. This information includes both aggregated and disaggregated data on case characteristics and individual characteristics. In addition, Tribes that are subject to a penalty are allowed to provide reasonable cause justifications as to why a penalty should not be imposed or may develop and implement corrective compliance procedures to eliminate the source of the penalty. Finally, there is an annual report, which requires the Tribes to describe program characteristics. All of the above requirements are currently approved by OMB and the Administration for Children and Families is simply proposing to extend them without any changes.

Respondents: Indian Tribes.

ANNUAL BURDEN ESTIMATES

Instrument	Number of respondents	Number of responses per respondent	Average burden hours per response	Total burden hours
Final Tribal TANF Data Report	62	4	451	111,848
Tribal TANF Annual Report	62	1	40	2,480
Tribal TANF Reasonable Cause/Corrective	62	1	60	3,720

Estimated Total Annual Burden Hours: 118,048.

Additional Information: Copies of the proposed collection may be obtained by writing to the Administration for Children and Families, Office of Administration, Office of Information Services, 370 L'Enfant Promenade, SW., Washington, DC 20447, *Attn:* ACF Reports Clearance Officer. All requests should be identified by the title of the information collection. *E-mail address: infocollection@acf.hhs.gov.*

OMB Comment: OMB is required to make a decision concerning the collection of information between 30 and 60 days after publication of this document in the **Federal Register**. Therefore, a comment is best assured of having its full effect if OMB receives it within 30 days of publication. Written comments and recommendations for the proposed information collection should be sent directly to the following:

Office of Management and Budget, Paperwork Reduction Project, *Fax:* 202–395–7245. *Attn:* Desk Officer for the Administration for Children and Families.

Dated: July 7, 2009.

Janean Chambers,

Reports Clearance Officer.

[FR Doc. E9–16320 Filed 7–9–09; 8:45 am]

BILLING CODE 4184–01–P

DEPARTMENT OF HEALTH AND HUMAN SERVICES

Administration for Children and Families

Submission for OMB Review; Comment Request

Title: Developmental Disabilities Protection & Advocacy Program Statement of Goals and Priorities.

OMB No.: 0980–0270.

Description: Federal statute and regulation require each State Protection and Advocacy (P&A) System to prepare and submit to public comment a Statement of Goals and Priorities (SGP) for the P&A for Developmental Disabilities (PADD) program for each coming fiscal year. While the P&A is mandated to protect and advocate under a range of different Federally authorized

disabilities programs, only the PADD program requires an SGP. Following the required public input for the coming fiscal year, the P&As submit the final version of this SGP to the Administration on Developmental Disabilities (ADD). ADD will aggregate the information in the SGPs into a national profile of programmatic emphasis for P&A Systems in the coming year. This aggregation will provide ADD with a tool for monitoring of the public input requirement. Furthermore, it will provide an overview of program direction, and permit ADD to track accomplishments against goals/targets, permitting the formulation of technical assistance and compliance with the Government Performance and Results Act of 1993.

Respondents: State and Tribal Governments.

ANNUAL BURDEN ESTIMATES

Instrument	Number of respondents	Number of responses per respondent	Average burden hours per response	Total burden hours
P&A SGP	57	1	44	2,508

Estimated Total Annual Burden Hours: 2,508.

Additional Information

Copies of the proposed collection may be obtained by writing to the Administration for Children and Families, Office of Administration, Office of Information Services, 370 L'Enfant Promenade, SW., Washington, DC 20447, *Attn:* ACF Reports Clearance Officer. All requests should be identified by the title of the information collection. *E-mail address: infocollection@acf.hhs.gov.*

OMB Comment

OMB is required to make a decision concerning the collection of information between 30 and 60 days after publication of this document in the **Federal Register**. Therefore, a comment is best assured of having its full effect if OMB receives it within 30 days of publication. Written comments and recommendations for the proposed information collection should be sent directly to the following: Office of Management and Budget, Paperwork Reduction Project; *Fax:* 202–395–7245, *Attn:* Desk Officer for the Administration for Children and Families.

Dated: July 7, 2009.

Janean Chambers,

Reports Clearance Officer.

[FR Doc. E9–16317 Filed 7–9–09; 8:45 am]

BILLING CODE 4184–01–P

DEPARTMENT OF HEALTH AND HUMAN SERVICES

National Institutes of Health

National Institute of General Medical Sciences; Notice of Closed Meetings

Pursuant to section 10(d) of the Federal Advisory Committee Act, as amended (5 U.S.C. App.), notice is hereby given of the following meetings.

The meetings will be closed to the public in accordance with the provisions set forth in sections 552b(c)(4) and 552b(c)(6), Title 5 U.S.C., as amended. The grant applications and the discussions could disclose confidential trade secrets or commercial property such as patentable material, and personal information concerning individuals associated with the grant applications, the disclosure of which would constitute a clearly unwarranted invasion of personal privacy.

Name of Committee: National Institute of General Medical Sciences Special Emphasis Panel, NIH Pathway to Independence Awards.

Date: July 27–28, 2009.

Time: 7 p.m. to 5 p.m.

Agenda: To review and evaluate grant applications.

Place: Double Tree Hotel Bethesda, 8120 Wisconsin Avenue, Bethesda, MD 20814.

Contact Person: Meredith D. Temple-O'Connor, PhD, Scientific Review Officer, Office of Scientific Review, National Institute of General Medical Sciences, National Institutes of Health, 45 Center Drive, Room 3AN12C, Bethesda, MD 20892, 301–594–2772, *templeocm@mail.nih.gov*.

Name of Committee: National Institute of General Medical Sciences Special Emphasis Panel, Faculty Recruitment—ARRA Funds.

Date: July 28–29, 2009.

Time: 6 p.m. to 5 p.m.

Agenda: To review and evaluate grant applications.

Place: Double Tree Hotel Bethesda, 8120 Wisconsin Avenue, Bethesda, MD 20814.

Contact Person: Rebecca H. Johnson, PhD, Scientific Review Officer, Office of Scientific Review, National Institute of General Medical Sciences, National Institutes of Health, Natcher Building, Room 3AN18, Bethesda, MD 20892, 301–594–2771, *johnsonrh@nigms.nih.gov*.

Name of Committee: National Institute of General Medical Sciences Special Emphasis Panel, Faculty Recruitment— ARRA Funds.

Date: July 28–29, 2009.

Time: 6 p.m. to 5 p.m.

Agenda: To review and evaluate grant applications.

Place: Double Tree Hotel Bethesda, 8120 Wisconsin Avenue, Bethesda, MD 20814.

Contact Person: Meredith D. Temple-O'Connor, PhD, Scientific Review Officer, Office of Scientific Review, National Institute of General Medical Sciences, National Institutes of Health, 45 Center Drive, Room 3AN12C, Bethesda, MD 20892, 301–594–2772, *templeocm@mail.nih.gov*.

(Catalogue of Federal Domestic Assistance Program Nos. 93.375, Minority Biomedical Research Support; 93.821, Cell Biology and Biophysics Research; 93.859, Pharmacology, Physiology, and Biological Chemistry Research; 93.862, Genetics and Developmental Biology Research; 93.88, Minority Access to Research Careers; 93.96, Special Minority Initiatives; 93.701, ARRA Related Biomedical Research and Research Support Awards, National Institutes of Health, HHS)

Dated: July 1, 2009.

Jennifer Spaeth,

Director, Office of Federal Advisory Committee Policy.

[FR Doc. E9–16068 Filed 7–9–09; 8:45 am]

BILLING CODE 4140–01–M

DEPARTMENT OF HEALTH AND HUMAN SERVICES

Food and Drug Administration

[Docket No. FDA–2009–N–0295]

Providing Effective Information to Consumers About Prescription Drug Risks and Benefits; Public Workshop

AGENCY: Food and Drug Administration, HHS.

ACTION: Notice of public workshop; request for comments.

SUMMARY: The Food and Drug Administration (FDA) Center for Drug Evaluation and Research (CDER), in collaboration with FDA's Office of the Commissioner (OC), is announcing a public workshop entitled ''Providing Effective Information to Consumers About Prescription Drug Risks and Benefits.'' This public workshop is intended to explore potential approaches that will result in written

prescription drug information for consumers that is comprehensible, accurate, and easy to access.

DATES: The public workshop will be held on September 24 and 25, 2009, from 8 a.m. to 5:30 p.m. Written or electronic comments on the posted information or on the workshop must be submitted to the docket by November 25, 2009.

ADDRESSES: The public workshop will be held at the Hilton Washington DC/North Gaithersburg, 620 Perry Pkwy., Gaithersburg, MD 20877. Submit written comments to the Division of Dockets Management (HFA–305), Food and Drug Administration, 5630 Fishers Lane, rm. 1061, Rockville, MD 20852. All comments should be identified with the docket number found in the brackets in the heading of this document. A transcript of plenary sessions will be available for review at the Division of Dockets Management and on the Internet at *http://www.regulations.gov* approximately 30 days after the workshop.

FOR FURTHER INFORMATION CONTACT: Mary Gross, Center for Drug Evaluation and Research, Food and Drug Administration, 10903 New Hampshire Ave., Bldg. 51, rm. 6178, Silver Spring, MD 20993, 301–796–3519, e-mail: *mary.gross@fda.hhs.gov*; or Marsha Holloman, Center for Drug Evaluation and Research, Food and Drug Administration, 10903 New Hampshire Ave., Bldg. 51, rm. 6173, Silver Spring, MD 20993, 301–796–0731, e-mail: *marsha.holloman@fda.hhs.gov.*

SUPPLEMENTARY INFORMATION:

I. Background

In order to make informed decisions about health care, patients need to have easy access to up-to-date and accurate information about the risks and benefits of the prescription drugs they take. Currently, consumers are receiving multiple pieces of written information with their prescription drugs from the pharmacy, information that is developed and distributed through various sources. Over the years, FDA has undertaken a number of initiatives in an effort to ensure that consumers receive useful written information when they obtain their prescription medicines from the pharmacy. The following is a short description of both required and voluntary patient labeling.

Since 1968, FDA regulations have required that patient package inserts (PPIs), written specifically for patients, be distributed to patients when certain prescription drugs, or classes of prescription drugs are dispensed (§ 310.501 (21 CFR 310.501) and § 310.515 (21 CFR 310.515)). PPIs for estrogens (§ 310.515) and oral contraceptives (§ 310.501) are FDA-approved and are considered part of the product labeling. They must be given to the patient when the product is dispensed. Other PPIs are submitted to FDA voluntarily by manufacturers and approved by FDA, but their distribution is not mandated by regulation. For example, many PPIs have been submitted to the agency for review in response to the FDA draft guidance entitled ''Brief Summary: Disclosing Risk Information in Consumer-Directed Print Advertisements'' issued in April 2001. Under the Food and Drug Administration Amendments Act (FDAAA), FDA can require a PPI as part of a risk evaluation and mitigation strategy (REMS).

Medication Guides are patient labeling (21 CFR part 208) and accompany those drugs deemed by the agency to have serious and significant risks. Medication Guides address issues that are specific to particular drugs or in some cases, drug classes, and they contain FDA-approved information that can help patients avoid serious adverse reactions. Medication Guides are developed by manufacturers and reviewed by FDA and they are required to be distributed by pharmacies with each prescription. In the **Federal Register** of August 24, 1995 (60 FR 44182), FDA published a proposed rule entitled ''Prescription Drug Product Labeling: Medication Guide Requirements.'' In the **Federal Register** of December 1, 1998 (63 FR 66378), the final rule with the same title was published. On June 12 and 13, 2007, a public meeting entitled ''Use of Medication Guides to Distribute Drug Risk Information to Patients'' was held. The public testified that the Medication Guide distribution process needed improvement including providing a means for electronic printing, waiving certain format requirements and ensuring that a complete list of Medication Guides were posted in a central location on the Web. Some expressed the view that Medication Guides should be shorter and easier to read. Finally, comments indicated that the sources of patient information should be consolidated into a single document.

In September 2007, Congress amended the Federal Food, Drug, and Cosmetic Act and included Medication Guides as one potential element of a REMS. FDA may require a sponsor to develop a REMS if it determines a REMS is necessary to ensure that the benefits of a drug outweigh the risks. Between September 2007 when FDAAA was enacted and May 31, 2009, FDA has approved 50 REMS with Medication Guides, including 43 REMS that consisted only of a Medication Guide and a timetable for assessment of the REMS. The use of Medication Guides as part of REMS, particularly as part of REMS that affect whole classes of drugs, has provided further impetus to evaluate different approaches to providing the type of prescription drug information that is normally provided in a Medication Guide to consumers.

Consumer Medication Information (CMI) is based on Public Law 104–180. Under Public Law 104–180, prescription drug information is developed and distributed by the private sector and the development of this information is voluntary. Public Law 104–180 adopted certain goals and timeframes consistent with FDA's proposed rule (60 FR 44182) which were:

- By the year 2000, 75 percent of people receiving new prescriptions would receive ''useful'' patient information with their prescriptions; and
- By the year 2006, 95 percent of people receiving new prescriptions would receive ''useful'' written patient information with their prescriptions.

FDA was charged with evaluating the private sector's progress in meeting these goals and to establish guidelines for usefulness criteria. By passing this legislation, FDA was also enjoined from further rulemaking that would require patient information for all prescription drugs, so long as these goals were met within specified timeframes.

CMI has failed to meet the statutory goals based on two independent evaluations performed in 2001 and 2008. In the 2001 evaluation, 89 percent of patients received some form of information, with 50 percent of this information determined to be useful. On July 6, 2006, FDA issued a guidance entitled ''Useful Written Consumer Medication Information (CMI).'' The second CMI evaluation, conducted in 2008, found that patients received information 94 percent of the time, but only 75 percent of that information was deemed useful, missing the goal set out in Public Law 104–180 that 95 percent of consumers would receive useful prescription drug information by 2006.

With a CMI effort that does not meet Congressional goals and reports indicating that many patients may not be understanding (or even receiving) Medication Guides from the pharmacy, FDA is reexamining the current process whereby prescription drug information is developed and disseminated to patients.

By September 21, 2009, FDA will post the following information:

- Workshop agenda;
- FDA Issues Paper that describes past history, current challenges, and possible approaches to improve the current system;
- A series of prototypes that explore different written approaches to conveying prescription drug information to consumers; and
- A list of FDA speakers, invited workshop participants, and meeting registrants.

This public workshop is intended to explore potential approaches that will result in written prescription drug information that is comprehensible, accurate, and more easily accessible to consumers. The purpose of this public workshop is to assemble stakeholder groups to determine appropriate steps towards improving the content, format, distribution, and evaluation of patient information.

Registration: To register for the meeting either: (1) Mail your registration information to one of the contact persons (see **FOR FURTHER INFORMATION CONTACT**) or (2) e-mail your registration information to *PatientInfoPublicWkshp@fda.hhs.gov.* Registration information should include registrant name, company or organization, address, phone number, and e-address. Registration requests should be received by August 17, 2009. Registration is free. Seats are limited. FDA may limit the numbers of participants from each organization based on space limitations. Registrants will receive confirmation once they have been accepted for participation in the workshop. Onsite registration on the day of the meeting will be based on space availability on the day of the event starting at 7:30 a.m. If registration reaches maximum capacity, FDA will post a notice closing meeting registration for the workshop at *http://www.fda.gov/Drugs/NewsEvents/ucm168106.htm*. If you need special accommodations due to a disability, please contact Mary Gross or Marsha Holloman (see **FOR FURTHER INFORMATION CONTACT**) at least 7 days in advance.

Dated:July 2, 2009.

Jeffrey Shuren,

Associate Commissioner for Policy and Planning.

[FR Doc. E9–16335 Filed 7–9–09; 8:45 am]

BILLING CODE 4160–01–S

DEPARTMENT OF HEALTH AND HUMAN SERVICES

National Institutes of Health

National Institute on Drug Abuse; Notice of Closed Meetings

Pursuant to section 10(d) of the Federal Advisory Committee Act, as amended (5 U.S.C. App.), notice is hereby given of the following meetings.

The meetings will be closed to the public in accordance with the provisions set forth in sections 552b(c)(4) and 552b(c)(6), Title 5 U.S.C., as amended. The grant applications and the discussions could disclose confidential trade secrets or commercial property such as patentable material, and personal information concerning individuals associated with the grant applications, the disclosure of which would constitute a clearly unwarranted invasion of personal privacy.

Name of Committee: National Institute on Drug Abuse Special Emphasis Panel, NIDA ARRA Go Applications on Genetics, Harmonizing Phenotypes and Envirotypes, Epigenetics and Pharmacogenomics.

Date: July 16, 2009.

Time: 8 a.m. to 5 p.m.

Agenda: To review and evaluate grant applications.

Place: Washington Plaza Hotel, 10 Thomas Circle, NW., Washington, DC 20005.

Contact Person: Gerald L. McLaughlin, PhD, Scientific Review Administrator, Office of Extramural Affairs, National Institute on Drug Abuse, NIH, DHHS, Room 220, MSC 8401, 6101 Executive Blvd., Bethesda, MD 20892–8401, 301–402–6626, *gm145a@nih.gov.*

This notice is being published less than 15 days prior to the meeting due to the timing limitations imposed by the review and funding cycle.

Name of Committee: National Institute on Drug Abuse Special Emphasis Panel, ARRA GO Criminal Justice Grant Application Review.

Date: July 23, 2009.

Time: 8 a.m. to 5 p.m.

Agenda: To review and evaluate grant applications.

Place: Embassy Suites at the Chevy Chase Pavilion, 4300 Military Road, NW., Washington, DC 20015.

Contact Person: Gerald L. McLaughlin, PhD, Scientific Review Administrator, Office of Extramural Affairs, National Institute on Drug Abuse, NIH, DHHS, Room 220, MSC 8401, 6101 Executive Blvd., Bethesda, MD 20892–8401, 301–402–6626, *gm145a@nih.gov.*

Name of Committee: National Institute on Drug Abuse Special Emphasis Panel, ARRA GO CTN-Based Grant Application Review.

Date: July 27, 2009.

Time: 9 a.m. to 5 p.m.

Agenda: To review and evaluate grant applications.

Place: National Institutes of Health, 6101 Executive Boulevard, Rockville, MD 20852.

Contact Person: Mark R. Green, PhD, Deputy Director, Office of Extramural Affairs, National Institute on Drug Abuse, NIH, DHHS, Room 220, MSC 8401, 6101 Executive Boulevard, Bethesda, MD 20892–8401, (301) 435–1431, *mgreen1@nida.nih.gov.*

Name of Committee: National Institute on Drug Abuse Special Emphasis Panel, ARRA GO Small Molecule and Vaccine Medications.

Date: July 28, 2009.

Time: 8 a.m. to 5 p.m.

Agenda: To review and evaluate grant applications.

Place: Sofitel Washington DC, Lafayette Hotel, 806 15th Street, NW., Washington, DC 20005.

Contact Person: Jose F Ruiz, PhD, Scientific Review Administrator, Office of Extramural Affairs, National Institute on Drug Abuse, NIH, 6101 Executive Blvd., Rm. 213, MSC 8401, Bethesda, MD 20892, 301–451–3086, *ruizjf@nida.nih.gov.*

Name of Committee: National Institute on Drug Abuse Special Emphasis Panel, NIDA Conference Grant Application Review.

Date: July 30, 2009.

Time: 10 a.m. to 1 p.m.

Agenda: To review and evaluate grant applications.

Place: National Institutes of Health, 6101 Executive Boulevard, Rockville, MD 20852 (Virtual Meeting).

Contact Person: Mark R. Green, PhD, Deputy Director, Office of Extramural Affairs, National Institute on Drug Abuse, NIH, DHHS, Room 220, MSC 8401, 6101 Executive Boulevard, Bethesda, MD 20892–8401, (301)435–1431, *mgreen1@nida.nih.gov.*

Name of Committee: National Institute on Drug Abuse Special Emphasis Panel, ARRA Grand Opportunities: Prevention Infrastructure.

Date: August 4, 2009.

Time: 9 a.m. to 5 p.m.

Agenda: To review and evaluate grant applications.

Place: The Dupont Hotel, 1500 New Hampshire Avenue, NW., Washington, DC 20036.

Contact Person: Nadine Rogers, PhD, Scientific Review Administrator, Office of Extramural Affairs, National Institute on Drug Abuse, NIH, DHHS, Room 220, MSC 8401, 6101 Executive Boulevard, Bethesda, MD 20892–8401, 301–402–2105, *rogersn2@nida.nih.gov.*

(Catalogue of Federal Domestic Assistance Program Nos. 91279, Drug Abuse and Addiction Research Programs, National Institutes of Health, HHS)

Dated: July 1, 2009.

Jennifer Spaeth,

Director, Office of Federal Advisory Committee Policy.

[FR Doc. E9–16067 Filed 7–9–09; 8:45 am]

BILLING CODE 4140–01–M

DEPARTMENT OF HEALTH AND HUMAN SERVICES

National Institutes of Health

National Institute on Drug Abuse; Notice of Closed Meeting

Pursuant to section 10(d) of the Federal Advisory Committee Act, as amended (5 U.S.C. App.), notice is hereby given of the following meeting.

The meeting will be closed to the public in accordance with the provisions set forth in sections 552b(c)(4) and 552b(c)(6), Title 5 U.S.C., as amended. The grant applications and the discussions could disclose confidential trade secrets or commercial property such as patentable material, and personal information concerning individuals associated with the grant applications, the disclosure of which would constitute a clearly unwarranted invasion of personal privacy.

Name of Committee: National Institute on Drug Abuse Special Emphasis Panel; LRP Application.

Date: July 10, 2009.

Time: 9 a.m. to 10 a.m.

Agenda: To review and evaluate grant applications.

Place: National Institutes of Health, 6101 Executive Blvd, Rockville, MD 20852 (Virtual Meeting).

Contact Person: Lyle Furr, Contract Review Specialist, Office of Extramural Affairs, National Institute on Drug Abuse, NIH, DHHS, Room 220, MSC 8401, 6101 Executive Boulevard, Bethesda, MD 20892–8401, (301) 435–1439, *lf33c.nih.gov*.

This notice is being published less than 15 days prior to the meeting due to the timing limitations imposed by the review and funding cycle.

(Catalogue of Federal Domestic Assistance Program No. 93.279, Drug Abuse and Addiction Research Programs, National Institutes of Health, HHS)

Dated: July 1, 2009.

Jennifer Spaeth,

Director, Office of Federal Advisory Committee Policy.

[FR Doc. E9–16066 Filed 7–9–09; 8:45 am]

BILLING CODE 4140–01–M

DEPARTMENT OF HEALTH AND HUMAN SERVICES

National Institutes of Health

Office of the Director, National Institutes of Health; Notice of Closed Meeting

Pursuant to section 10(d) of the Federal Advisory Committee Act, as amended (5 U.S.C. App.), notice is hereby given of a meeting of the Council of Councils.

The meeting will be closed to the public in accordance with the provisions set forth in section 552b(c)(9)(B), Title 5 U.S.C., as amended because the premature disclosure of grant applications and the discussions would likely significantly frustrate implementation of recommendations.

Name of Committee: Council of Councils.

Date: August 18, 2009.

Time: 3 p.m. to 5 p.m.

Agenda: To review and evaluate grant applications.

Place: National Institutes of Health, Building 31, 31 Center Drive, Conference Room 7, Bethesda, MD 20892, (Telephone Conference Call).

Contact Person: Robin Kawazoe, Executive Secretary, Division of Program Coordination, Planning, and Strategic Initiatives, Office of the Director, NIH, Building 1, Room 260B, Bethesda, MD 20892, *kawazoer@mail.nih.gov*.

(Catalogue of Federal Domestic Assistance Program Nos. 93.14, Intramural Research Training Award; 93.22, Clinical Research Loan Repayment Program for Individuals from Disadvantaged Backgrounds; 93.232, Loan Repayment Program for Research Generally; 93.39, Academic Research Enhancement Award; 93.936, NIH Acquired Immunodeficiency Syndrome Research Loan Repayment Program; 93.187, Undergraduate Scholarship Program for Individuals from Disadvantaged Backgrounds, National Institutes of Health, HHS)

Dated: July 1, 2009.

Jennifer Spaeth,

Director, Office of Federal Committee Policy.

[FR Doc. E9–16064 Filed 7–9–09; 8:45 am]

BILLING CODE 4140–01–M

DEPARTMENT OF HEALTH AND HUMAN SERVICES

Centers for Disease Control and Prevention

Request for Nominations of Candidates to Serve on the Board of Scientific Counselors, National Center for Environmental Health/Agency for Toxic Substances and Disease Registry (BSC, NCEH/ATSDR), Centers for Disease Control and Prevention (CDC)

The NCEH/ATSDR is soliciting nominations for possible membership on the Board of Scientific Counselors (BSC). The BSC, NCEH/ATSDR provides advice and guidance to the Secretary, HHS; the Director, CDC and Administrator, ATSDR; and the Director, NCEH/ATSDR, regarding program goals, objectives, strategies, and priorities in fulfillment of the agencies' mission to protect and promote people's health. The Board provides advice and guidance to help NCEH/ATSDR work more efficiently and effectively with its various constituents and to fulfill its mission in protecting America's health.

Nominations are being sought for individuals who have expertise and qualifications necessary to contribute to the accomplishments of the Board's objectives. Nominees will be selected from experts having experience in preventing human diseases and disabilities caused by environmental conditions. Experts in the disciplines of toxicology, epidemiology, environmental or occupational medicine, behavioral science, risk assessment, exposure assessment, and experts in public health and other related disciplines will be considered. Consideration is given to representation from diverse geographic areas, gender, ethnic and minority groups, and the disabled. Members may be invited to serve up to four-year terms. Nominees must be U.S. citizens.

The following information must be submitted for each candidate: Name, affiliation, address, telephone number, and current curriculum vitae. E-mail addresses are requested if available.

Nominations should be sent, in writing, and postmarked by November 30, 2009 to: Sandra Malcom, Committee Management Specialist, NCEH/ATSDR, Centers for Disease Control and Prevention, 4770 Buford Highway (MS–F61), Chamblee, Georgia 30341. (*E-mail address: sym6@CDC.GOV*.) Telephone and facsimile submissions cannot be accepted.

The Director, Management Analysis and Services Office, has been delegated the authority to sign **Federal Register** notices pertaining to announcements of meetings and other committee management activities for both CDC and the ATSDR.

Dated: July 6, 2009.

Elaine L. Baker,

Director, Management Analysis and Services Office, Centers for Disease Control and Prevention (CDC).

[FR Doc. E9–16339 Filed 7–9–09; 8:45 am]

BILLING CODE 4163–18–P

DEPARTMENT OF HOMELAND SECURITY

U.S. Customs and Border Protection

Accreditation and Approval of Amspec Services LLC, as a Commercial Gauger and Laboratory

AGENCY: U.S. Customs and Border Protection, Department of Homeland Security.

ACTION: Notice of accreditation and approval of Amspec Services LLC, as a commercial gauger and laboratory.

SUMMARY: Notice is hereby given that, pursuant to 19 CFR 151.12 and 19 CFR 151.13, Amspec Services LLC, 360 East Elizabeth Ave., Linden, NJ 07036, has been approved to gauge and accredited to test petroleum and petroleum products, organic chemicals and vegetable oils for customs purposes, in accordance with the provisions of 19 CFR 151.12 and 19 CFR 151.13. Anyone wishing to employ this entity to conduct laboratory analyses and gauger services should request and receive written assurances from the entity that it is accredited or approved by the U.S. Customs and Border Protection to conduct the specific test or gauger service requested. Alternatively, inquires regarding the specific test or gauger service this entity is accredited or approved to perform may be directed to the U.S. Customs and Border Protection by calling (202) 344–1060. The inquiry may also be sent to *cbp.labhq@dhs.gov.* Please reference the Web site listed below for a complete listing of CBP approved gaugers and accredited laboratories. *http://cbp.gov/xp/cgov/import/operations_support/labs_scientific_svcs/commercial_gaugers/.*

DATES: The accreditation and approval of Amspec Services LLC, as commercial gauger and laboratory became effective on March 18, 2009. The next triennial inspection date will be scheduled for March 2012.

FOR FURTHER INFORMATION CONTACT: Anthony Malana, Laboratories and Scientific Services, U.S. Customs and Border Protection, 1300 Pennsylvania Avenue, NW., Suite 1500N, Washington, DC 20229, 202–344–1060.

Dated: July 2, 2009.

Ira S. Reese,

Executive Director, Laboratories and Scientific Services.

[FR Doc. E9–16361 Filed 7–9–09; 8:45 am]

BILLING CODE 9111–14–P

DEPARTMENT OF HOMELAND SECURITY

U.S. Customs and Border Protection

Accreditation and Approval of Inspectorate America Corporation, as a Commercial Gauger and Laboratory

AGENCY: U.S. Customs and Border Protection, Department of Homeland Security.

ACTION: Notice of accreditation and approval of Inspectorate America Corporation, as a commercial gauger and laboratory.

SUMMARY: Notice is hereby given that, pursuant to 19 CFR 151.12 and 19 CFR 151.13, Inspectorate America Corporation, 16025–C Jacintoport Blvd., Houston, TX 77015, has been approved to gauge and accredited to test petroleum and petroleum products, organic chemicals and vegetable oils for customs purposes, in accordance with the provisions of 19 CFR 151.12 and 19 CFR 151.13. Anyone wishing to employ this entity to conduct laboratory analyses and gauger services should request and receive written assurances from the entity that it is accredited or approved by the U.S. Customs and Border Protection to conduct the specific test or gauger service requested. Alternatively, inquires regarding the specific test or gauger service this entity is accredited or approved to perform may be directed to the U.S. Customs and Border Protection by calling (202) 344–1060. The inquiry may also be sent to *cbp.labhq@dhs.gov.* Please reference the Web site listed below for a complete listing of CBP approved gaugers and accredited laboratories. *http://cbp.gov/xp/cgov/import/operations_support/labs_scientific_svcs/commercial_gaugers/*

DATES: The accreditation and approval of Inspectorate America Corporation, as commercial gauger and laboratory became effective on November 10, 2008. The next triennial inspection date will be scheduled for November 2011.

FOR FURTHER INFORMATION CONTACT: Anthony Malana, Laboratories and Scientific Services, U.S. Customs and Border Protection, 1300 Pennsylvania Avenue, NW., Suite 1500N, Washington, DC 20229, 202–344–1060.

Dated: July 2, 2009.

Ira S. Reese,

Executive Director, Laboratories and Scientific Services.

[FR Doc. E9–16360 Filed 7–9–09; 8:45 am]

BILLING CODE 9111–14–P

DEPARTMENT OF HOMELAND SECURITY

U.S. Customs and Border Protection

Approval of the Strawn Group, as a Commercial Gauger

AGENCY: U.S. Customs and Border Protection, Department of Homeland Security.

ACTION: Notice of approval of the Strawn Group, as a commercial gauger.

SUMMARY: Notice is hereby given that, pursuant to 19 CFR 151.13, the Strawn Group, 3855 Villa Ridge, Houston, TX 77068, has been approved to gauge petroleum, petroleum products, organic chemicals and vegetable oils for customs purposes, in accordance with the provisions of 19 CFR 151.13. Anyone wishing to employ this entity to conduct gauger services should request and receive written assurances from the entity that it is approved by the U.S. Customs and Border Protection to conduct the specific gauger service requested. Alternatively, inquiries regarding the specific gauger service this entity is approved to perform may be directed to the U.S. Customs and Border Protection by calling (202) 344–1060. The inquiry may also be sent to *cbp.labhq@dhs.gov.* Please reference the Web site listed below for a complete listing of CBP approved gaugers and accredited laboratories: *http://cbp.gov/xp/cgov/import/operations_support/labs_scientific_svcs/commercial_gaugers/.*

DATES: The approval of the Strawn Group, as a commercial gauger became effective on December 31, 2008. The next triennial inspection date will be scheduled for December 2011.

FOR FURTHER INFORMATION CONTACT: Anthony Malana, Laboratories and Scientific Services, U.S. Customs and Border Protection, 1300 Pennsylvania Avenue, NW., Suite 1500N, Washington, DC 20229, 202–344–1060.

Dated: July 2, 2009.

Ira S. Reese,

Executive Director, Laboratories and Scientific Services.

[FR Doc. E9–16362 Filed 7–9–09; 8:45 am]

BILLING CODE 9111–14–P

DEPARTMENT OF HOUSING AND URBAN DEVELOPMENT

[Docket No. FR–5280–N–26]

Federal Property Suitable as Facilities To Assist the Homeless

AGENCY: Office of the Assistant Secretary for Community Planning and Development, HUD.

ACTION: Notice.

SUMMARY: This Notice identifies unutilized, underutilized, excess, and surplus Federal property reviewed by HUD for suitability for possible use to assist the homeless.

FOR FURTHER INFORMATION CONTACT: Kathy Ezzell, Department of Housing and Urban Development, 451 Seventh Street, SW., Room 7266, Washington,

DC 20410; telephone (202) 708–1234; TTY number for the hearing- and speech-impaired (202) 708–2565 (these telephone numbers are not toll-free), or call the toll-free Title V information line at 800–927–7588.

SUPPLEMENTARY INFORMATION: In accordance with 24 CFR part 581 and section 501 of the Stewart B. McKinney Homeless Assistance Act (42 U.S.C. 11411), as amended, HUD is publishing this Notice to identify Federal buildings and other real property that HUD has reviewed for suitability for use to assist the homeless. The properties were reviewed using information provided to HUD by Federal landholding agencies regarding unutilized and underutilized buildings and real property controlled by such agencies or by GSA regarding its inventory of excess or surplus Federal property. This Notice is also published in order to comply with the December 12, 1988 Court Order in *National Coalition for the Homeless* v. *Veterans Administration*, No. 88–2503–OG (D.D.C.).

Properties reviewed are listed in this Notice according to the following categories: Suitable/available, suitable/unavailable, suitable/to be excess, and unsuitable. The properties listed in the three suitable categories have been reviewed by the landholding agencies, and each agency has transmitted to HUD: (1) Its intention to make the property available for use to assist the homeless, (2) its intention to declare the property excess to the agency's needs, or (3) a statement of the reasons that the property cannot be declared excess or made available for use as facilities to assist the homeless.

Properties listed as suitable/available will be available exclusively for homeless use for a period of 60 days from the date of this Notice. Where property is described as for ''off-site use only'' recipients of the property will be required to relocate the building to their own site at their own expense. Homeless assistance providers interested in any such property should send a written expression of interest to HHS, addressed to Theresa Rita, Division of Property Management, Program Support Center, HHS, room 5B–17, 5600 Fishers Lane, Rockville, MD 20857; (301) 443–2265. (This is not a toll-free number.) HHS will mail to the interested provider an application packet, which will include instructions for completing the application. In order to maximize the opportunity to utilize a suitable property, providers should submit their written expressions of interest as soon as possible. For complete details concerning the processing of applications, the reader is encouraged to refer to the interim rule governing this program, 24 CFR part 581.

For properties listed as suitable/to be excess, that property may, if subsequently accepted as excess by GSA, be made available for use by the homeless in accordance with applicable law, subject to screening for other Federal use. At the appropriate time, HUD will publish the property in a Notice showing it as either suitable/available or suitable/unavailable.

For properties listed as suitable/unavailable, the landholding agency has decided that the property cannot be declared excess or made available for use to assist the homeless, and the property will not be available.

Properties listed as unsuitable will not be made available for any other purpose for 20 days from the date of this Notice. Homeless assistance providers interested in a review by HUD of the determination of unsuitability should call the toll free information line at 1–800–927–7588 for detailed instructions or write a letter to Mark Johnston at the address listed at the beginning of this Notice. Included in the request for review should be the property address (including zip code), the date of publication in the **Federal Register**, the landholding agency, and the property number.

For more information regarding particular properties identified in this Notice (*i.e.*, acreage, floor plan, existing sanitary facilities, exact street address), providers should contact the appropriate landholding agencies at the following addresses: *Energy:* Mr. Mark Price, Department of Energy, Office of Engineering & Construction Management, MA–50, 1000 Independence Ave., SW., Washington, DC 20585: (202) 586–5422; *GSA:* Mr. Gordon Creed, Acting Deputy Assistant Commissioner, General Services Administration, Office of Property Disposal, 18th & F Streets, NW., Washington, DC 20405; (202) 501–0084; *Interior:* Mr. Michael Wright, Acquisition & Property Management, Department of the Interior, 1849 C Street, NW., MS2603, Washington, DC 20240; (202) 208–5399; *Navy:* Mrs. Mary Arndt, Acting Director, Department of the Navy, Real Estate Services, Naval Facilities Engineering Command, Washington Navy Yard, 1322 Patterson Ave., SE., Suite 1000, Washington, DC 20374–5065; (202) 685–9305; (These are not toll-free numbers).

Dated: July 2, 2009.

Mark R. Johnston

Deputy Assistant Secretary for Special Needs.

TITLE V, FEDERAL SURPLUS PROPERTY PROGRAM

FEDERAL REGISTER REPORT FOR 07/10/2009

Suitable/Available Properties

Building

Iowa

U.S. Army Reserve
620 West 5th St.
Garner IA 50438
Landholding Agency: GSA
Property Number: 54200920017
Status: Excess
GSA Number: 7–D–IA–0510
Comments: 5743 sq. ft., presence of lead paint, most recent use—offices/classrooms/storage, subject to existing easements

Montana

Raymond MT Property
1559 Hwy 16 North
Raymond MT 59256
Landholding Agency: GSA
Property Number: 54200920019
Status: Surplus
GSA Number: 7–X–MT–630
Comments: 650 sq. ft., most recent use—office, off-site use only
Suitable/Available Properties

Land

Idaho

27.5 acres
portion of Tract E
Paul ID 83318
Landholding Agency: Interior
Property Number: 61200920020
Status: Unutilized
Comments: 90% is in agricultural production
8.0 acres
portion of Tract G
Rupert ID 83318
Landholding Agency: Interior
Property Number: 61200920021
Status: Unutilized
Comments: 90% is in agricultural production

Unsuitable Properties

Building

California

4 Bldgs.
Yosemite National Park
Yosemite CA 95389
Landholding Agency: Interior
Property Number: 61200920019
Status: Unutilized
Directions: Foresta Brandt Cabin, Bldgs. 521, 534, 6102
Reasons: Extensive deterioration

Bldg. 14123
Marine Corps Base
Camp Pendleton CA 92055
Landholding Agency: Navy
Property Number: 77200920031
Status: Excess
Reasons: Extensive deterioration, Secured Area

Bldg. 3302
Naval Base

San Diego CA
Landholding Agency: Navy
Property Number: 77200920032
Status: Unutilized
Reasons: Secured Area

Bldg. 1680
Naval Base Coronado
Warner Springs CA
Landholding Agency: Navy
Property Number: 77200920033
Status: Excess
Reasons: Extensive deterioration, Secured Area

Bldg. PH–11 Naval Base
Port Hueneme CA 93043
Landholding Agency: Navy
Property Number: 77200920034
Status: Unutilized
Reasons: Extensive deterioration, Secured Area

Guam

10 Bldgs.
Naval Base
North Tipalao
Santa Rita GU
Landholding Agency: Navy
Property Number: 77200920035
Status: Unutilized
Directions: 802, 803, 804, 811, 812, 813, 814, 821, 822, 823
Reasons: Secured Area

5 Bldgs.
Naval Base
North Tipalao
Santa Rita GU
Landholding Agency: Navy
Property Number: 77200920036
Status: Unutilized
Directions: 809, 810, 819, 820, 824
Reasons: Secured Area

10 Bldgs.
Naval Base
North Tipalao
Santa Rita GU
Landholding Agency: Navy
Property Number: 77200920037
Status: Unutilized
Directions: 972, 974, 975, 982, 971, 973, 970, 976, 978, 980
Reasons: Secured Area

Bldgs. 59, 70, 71
Naval Base
Barrigada GU
Landholding Agency: Navy
Property Number: 77200920038
Status: Unutilized
Reasons: Secured Area, Extensive deterioration

13 Bldgs.
Naval Base, NCTS
Dededo GU
Landholding Agency: Navy
Property Number: 77200920039
Status: Unutilized
Directions: 174, 176, 271, 272, 273, 274, 275, 276, 277, 278, 279, 280, 491
Reasons: Secured Area

Bldg. 367 & Storage Bldg.
Naval Base
Main Base
Dededo GU
Landholding Agency: Navy
Property Number: 77200920040
Status: Unutilized
Reasons: Secured Area

Bldg. 575
Naval Base
Camp Covington
Dededo GU
Landholding Agency: Navy
Property Number: 77200920041
Status: Unutilized
Reasons: Secured Area

6 Bldgs.
Naval Base
Former FAA Compound
Dededo GU
Landholding Agency: Navy
Property Number: 77200920042
Status: Unutilized
Directions: 1880, 1881, 1882, 1883, 1884, 1885
Reasons: Extensive deterioration

Hawaii

Bldg. 29
Naval Station
Pearl Harbor HI 96860
Landholding Agency: Navy
Property Number: 77200920043
Status: Excess
Reasons: Secured Area, Extensive deterioration

Illinois

Bldgs. 310, 330
Argonne National Lab
DuPage IL 60439
Landholding Agency: Energy
Property Number: 41200920007
Status: Excess
Reasons: Contamination, Secured Area

Iowa

U.S. Army Reserve Center
904 W. Washington St.
Mount Pleasant IA 52641
Landholding Agency: GSA
Property Number: 54200920018
Status: Excess
GSA Number: 7–D–IA–0509
Reasons: Within airport runway clear zone

Louisiana

6 Bldgs.
Naval Air Station
Joint Reserve Base
New Orleans LA 70143
Landholding Agency: Navy
Property Number: 77200920044
Status: Excess
Directions: 37, 89, 122, 159, 418, 902
Reasons: Secured Area, Within 2000 ft. of flammable or explosive material

New Mexico

2 Bldgs.
Los Alamos National Lab
18–0257, 18–0258
Los Alamos NM 87545
Landholding Agency: Energy
Property Number: 41200920008
Status: Excess
Reasons: Secured Area, Extensive deterioration

9 Bldgs.
Los Alamos National Lab
Los Alamos NM 87545
Landholding Agency: Energy
Property Number: 41200920009
Status: Excess
Directions: 53–0401, 53–0403, 53–0409, 53–0456, 53–0514, 53–0525, 53–0535, 53–0544, 53–0675
Reasons: Extensive deterioration, Secured Area

6 Bldgs.
Los Alamos National Lab
Los Alamos NM 87545
Landholding Agency: Energy
Property Number: 41200920010
Status: Excess
Directions: 54–0117, 54–0185, 54–210, 54–211, 54–221, 60–0282
Reasons: Secured Area, Extensive deterioration

6 Bldgs.
Los Alamos National Lab
Los Alamos NM 87545
Landholding Agency: Energy
Property Number: 41200920011
Status: Excess
Directions: 21–0155, 21–0209, 21–0213, 21–0227, 21–0229, 21–0257
Reasons: Extensive deterioration, Secured Area

8 Bldgs.
Los Alamos National Lab
Los Alamos NM 87545
Landholding Agency: Energy
Property Number: 41200920012
Status: Excess
Directions: 54–0226, 63–0001, 63–0002, 63–0003, 63–0004, 63–0077, 63–0078, 63–0093
Reasons: Secured Area, Extensive deterioration

Virginia

4 Bldgs./Land
Naval Station
Norfolk VA 23511
Landholding Agency: Navy
Property Number: 77200920045
Status: Underutilized
Directions: SDA–204, SDA–205, SDA–210, SDA–311 & 36.6 acres
Reasons: Secured Area

Washington

Bldgs. 2660, 2661, 2662
Naval Air Station
Whidbey Island WA 98278
Landholding Agency: Navy
Property Number: 77200920047
Status: Unutilized
Reasons: Extensive deterioration

Land

Florida

Encroachment #34
Gulf Intracoastal Waterway
Perdido Key FL
Landholding Agency: GSA
Property Number: 54200920016
Status: Excess
GSA Number: 4–D–FL–1223–AC
Reasons: Not accessible by road, Floodway

[FR Doc. E9–16202 Filed 7–9–09; 8:45 am]

BILLING CODE 4210–67–P

DEPARTMENT OF THE INTERIOR

Minerals Management Service

[Docket No. MMS–2009–OMM–0001]

MMS Information Collection Activity: 1010–0137, Historical Well Data Cleanup (HWDC) Project, Extension of a Collection; Submitted for Office of Management and Budget (OMB) Review; Comment Request

AGENCY: Minerals Management Service (MMS), Interior.

ACTION: Notice of extension of an information collection (1010–0137).

SUMMARY: To comply with the Paperwork Reduction Act of 1995 (PRA), we are notifying the public that we have submitted to OMB an information collection request (ICR) to renew approval of the paperwork requirements for the Notice to Lessees (NTL) on the Historical Well Data Cleanup (HWDC) Project. This notice also provides the public a second opportunity to comment on the paperwork burden of these regulatory requirements.

DATES: Submit written comments by August 10, 2009.

ADDRESSES: Submit comments either by fax (202) 395–5806 or e-mail (*OIRA_DOCKET@omb.eop.gov*) directly to the Office of Information and Regulatory Affairs, OMB, Attention: Desk Officer for the Department of the Interior (1010–0137). Please also submit a copy of your comments to MMS by any of the means below:

- *Electronically:* go to *http://www.regulations.gov*. Under the tab More Search Options, click Advanced Docket Search, then select Minerals Management Service from the agency drop-down menu, then click submit. In the Docket ID column, select MMS–2009–OMM–0001 to submit public comments and to view supporting and related materials available for this rulemaking. Information on using *Regulations.gov,* including instructions for accessing documents, submitting comments, and viewing the docket after the close of the comment period, is available through the site's User Tips link. The MMS will post all comments.
- Mail or hand-carry comments to the Department of the Interior; Minerals Management Service; Attention: Cheryl Blundon; 381 Elden Street, MS–4024; Herndon, Virginia 20170–4817. Please reference Information Collection 1010–0137 in your subject line and include your name and return address.

FOR FURTHER INFORMATION CONTACT: Cheryl Blundon, Regulations and Standards Branch, (703) 787–1607. You may also contact Cheryl Blundon to obtain a copy, at no cost, of the information collection request and the NTL that requires the subject collection of information.

SUPPLEMENTARY INFORMATION:

Title: Historical Well Data Cleanup (HWDC) Project.

OMB Control Number: 1010–0137.

Abstract: The Outer Continental Shelf (OCS) Lands Act, as amended (43 U.S.C. 1331 *et seq.* and 43 U.S.C. 1801 *et seq.*), authorizes the Secretary of the Interior to prescribe rules and regulations to administer leasing of the OCS. Such rules and regulations will apply to all operations conducted under a lease.

Section 1332(6) states that ''operations in the [O]uter Continental Shelf should be conducted in a safe manner by well trained personnel using technology, precautions, and other techniques sufficient to prevent or minimize the likelihood of blowouts, loss of well control, fires, spillages, physical obstructions to other users of the waters or subsoil and seabed, or other occurrences which may cause damage to the environment or to property or endanger life or health.'' These responsibilities are among those delegated to the Minerals Management Service (MMS).

To carry out these responsibilities, MMS issues regulations to ensure that operations in the OCS will meet statutory requirements; provide for safety and protect the environment; and result in diligent exploration, development, and production of OCS leases. In addition, we issue Notices to Lessees and Operators (NTLs) that provide clarification, explanation, and interpretation of our regulations. These NTLs are also used to convey purely informational material and to cover situations that might not be addressed in our regulations. The latter is the case for this information collection. Because of the unusual nature of this information collection, issuing an NTL is the appropriate means to collect the information.

The subject of this information collection request is the ''Historical Well Data Cleanup (HWDC) Project.'' It needs to be stressed that the information we are collecting is information that respondents are required to submit under regulations at 30 CFR 250 subpart D. However, in the past we did not always enforce this regulatory requirement for certain wellbores for several reasons. We did not foresee the value of this information for all wellbores, nor did we anticipate that not having the information would later create problems for the agency and others. We also did not have a sophisticated electronic database that could handle the information. We now collect all of the required information on a current basis (under 30 CFR 250, subpart D, OMB Control Number 1010–0141). Prior assurance to respondents that providing the information in connection with this project will not subject them to the penalties for not providing the information is still in place. We are requesting a renewal of this collection to allow operators more response time over a longer period to provide the missing or corrected data.

We will protect information from respondents considered proprietary under the Freedom of Information Act (5 U.S.C. 552) and its implementing regulations (43 CFR part 2) and under regulations at 30 CFR 250.197, ''Data and information to be made available to the public or for limited inspection.'' No items of a sensitive nature are collected. Responses are mandatory.

Frequency: On occasion.

Estimated Number and Description of Respondents: Approximately 130 Federal OCS oil, gas, and sulphur lessees.

Estimated Reporting and Recordkeeping Hour Burden: The estimated hour burden for this information collection is a total of 11,250 hours. The respondents will submit information for a remaining estimated 4,500 wells from an original 40,000 wells. Based on our own input, the concurrence of the contractor hired for this, and informal discussions with a few potential respondents, we estimate it will take respondents:

0.5 hours to locate and copy scout tickets for each well	.5 hours × 4,500 wells = 2,250
2 hours to retrieve and analyze each well file	2 hours × 4,500 wells = 9,000
Total Hours:	11,250

In calculating the burdens, we assumed that respondents perform certain requirements in the normal course of their activities. We consider these to be usual and customary and took that into account in estimating the burden.

Estimated Reporting and Recordkeeping Non-Hour Cost Burden: We have identified no paperwork non-hour cost burdens associated with the collection of information.

Public Disclosure Statement: The PRA (44 U.S.C. 3501, *et seq.*) provides that an agency may not conduct or sponsor a collection of information unless it displays a currently valid OMB control number. Until OMB approves a collection of information, you are not obligated to respond.

Comments: Section 3506(c)(2)(A) of the PRA (44 U.S.C. 3501, *et seq.*) requires each agency ''* * * to provide notice * * * and otherwise consult with members of the public and affected agencies concerning each proposed collection of information * * *'' Agencies must specifically solicit comments to: (a) Evaluate whether the proposed collection of information is necessary for the agency to perform its duties, including whether the information is useful; (b) evaluate the accuracy of the agency's estimate of the burden of the proposed collection of information; (c) enhance the quality, usefulness, and clarity of the information to be collected; and (d) minimize the burden on the respondents, including the use of automated collection techniques or other forms of information technology.

To comply with the public consultation process, on February 3, 2009, we published a **Federal Register** notice (74 FR 5943) announcing that we would submit this ICR to OMB for approval. The notice provided the required 60-day comment period. In addition, § 250.199 provides the OMB control number for the information collection requirements imposed by the 30 CFR 250 regulations. The regulation also informs the public that they may comment at any time on the collections of information and provides the address to which they should send comments. We have received one comment in response to these efforts; but it was not germane to the information collection request.

If you wish to comment in response to this notice, you may send your comments to the offices listed under the **ADDRESSES** section of this notice. The OMB has up to 60 days to approve or disapprove the information collection but may respond after 30 days. Therefore, to ensure maximum consideration, OMB should receive public comments by August 10, 2009.

Public Availability of Comments: Before including your address, phone number, e-mail address, or other personal identifying information in your comment, you should be aware that your entire comment—including your personal identifying information—may be made publicly available at any time. While you can ask us in your comment to withhold your personal identifying information from public review, we cannot guarantee that we will be able to do so.

MMS Information Collection Clearance Officer: Arlene Bajusz (202) 208–7744.

Dated: July 6, 2009.

E.P. Danenberger,

Chief, Office of Offshore Regulatory Programs.

[FR Doc. E9–16398 Filed 7–9–09; 8:45 am]

BILLING CODE 4310–MR–P

DEPARTMENT OF THE INTERIOR

National Park Service

General Management Plan, Environmental Impact Statement, Gateway National Recreation Area, New York and New Jersey

AGENCY: National Park Service, Department of the Interior.

ACTION: Notice of Intent to Prepare a General Management Plan and Environmental Impact Statement, Gateway National Recreation Area.

SUMMARY: Pursuant to section 102 (2)(C) of the National Environmental Policy Act (NEPA) of 1969, the National Park Service (NPS) is preparing a General Management Plan and Environmental Impact Statement (GMP/EIS) for the Gateway National Recreation Area. The park comprises approximately 26,607 acres, extending through three New York City boroughs (Brooklyn, Queens, and Staten Island) and into northern New Jersey (Monmouth County).

Prepared by park staff and planners in the NPS Northeast Region, with assistance from advisors and contractors, the GMP/EIS will propose a long-term approach to managing Gateway National Recreation Area. Consistent with the park's purpose, NPS policy, and other laws and regulations, alternatives will be developed to guide the management of the park over the next 15 to 20 years. The GMP/EIS will address a range of management alternatives for natural and cultural resource protection, visitor use and interpretation, park carrying capacity, facilities development and operations. A ''no action'' alternative will also be considered and an agency preferred management alternative identified. The alternatives will incorporate various zoning and management prescriptions to ensure resource preservation and public appreciation of the park. The environmental consequences that could result from implementing the various alternatives will be evaluated for cultural and natural resources, visitor experience, park operations, and the socioeconomic environment. Major issues to be explored include: measures for the preservation of resources; indications of the types and general intensities of development; identification of, and implementation commitments for, visitor carrying capacities; and indications of potential boundary modifications.

Meeting Notices: The public is invited to express views, issues and concerns about the long-term management of Gateway National Recreation Area. Public scoping meetings will be scheduled and consist of a discussion of the GMP/EIS process including ways that the public can be involved in providing and receiving information, and reviewing and commenting upon the draft GMP/EIS. The place and time of public scoping meetings will be announced by the NPS and noticed in local newspapers serving the area. Scoping and other periodic public meeting notices and information regarding the GMP/EIS will also be placed on the NPS Planning, Environment and Public Comment (PEPC) Web site (*http://parkplanning.nps.gov/gate*) for continuing public review and comment.

ADDRESSES: Information related to the GMP/EIS planning process and ongoing public involvement opportunities will be provided online at the Gateway National Recreation Area Web site (*http://www.nps.gov/gate*) and on the NPS PEPC Web site (*http://parkplanning.nps.gov/gate*). Requests to be added to the project mailing list may be made electronically through the NPS PEPC Web site or by directing requests to the contacts listed below.

FOR FURTHER INFORMATION CONTACT:

Barry Sullivan, Superintendent, Gateway National Recreation Area, 210 New York Avenue, Staten Island, NY 10305. *Telephone:* 718 354–4665.

Helen Mahan, Community Planner/Project Manager, National Park Service, Park Planning and Special Studies, 200 Chestnut Street, Philadelphia, PA 19106. *Telephone:* 215–597–6483.

SUPPLEMENTARY INFORMATION: If you wish to comment on the GMP/EIS, you

may submit your comments by any one of several methods. You may mail comments to contacts listed above or you may submit comments electronically through the NPS PEPC Web site (*http://parkplanning.nps.gov/gate*). Before including your address, phone number, e-mail address, or other personal identifying information in your comment, you should be aware that your entire comment—including your personal identifying information—may be made publicly available at any time. While you can ask us in your comment to withhold your personal identifying information from public review, we cannot guarantee that we will be able to do so.

Michael T. Reynolds,

Deputy Regional Director, Northeast Region, National Park Service.

[FR Doc. E9–16326 Filed 7–9–09; 8:45 am]

BILLING CODE 4310–PM–P

DEPARTMENT OF THE INTERIOR

National Park Service

AGENCY: National Park Service.

ACTION: Notice of Availability of a Plan of Operations and Environmental Assessment for a 30-day public review at Cuyahoga Valley National Park, Cuyahoga County, OH.

SUMMARY: The National Park Service (NPS), in accordance with Section 9.52(b) of Title 36 of the Code of Federal Regulations has received from M&M Royalty, Ltd., a Plan of Operations for the purpose of drilling and producing up to four oil/gas wells on the private property of Astorhurst and Prinios in Walton Hills, Ohio. The proposed site is located within the boundaries of Cuyahoga Valley National Park. A Plan of Operations describes the proposed operation, including the equipment, methods and materials to be used in the operation, mitigation measures to protect park resources and values and environmental conditions in the vicinity of the site, and environmental impacts of the proposed operations. When approved, the Plan of Operations serves as the operator's permit to conduct operations in a park. Under the provisions of the National Environmental Policy Act of 1969, the NPS has prepared an Environmental Assessment which evaluates potential impacts associated with the proposed drilling operation located within the park.

DATES: The above documents are available for public review and comment for a period of 30 days from the publication date of this notice in the **Federal Register**. You may submit your comments by any one of several methods. You may comment via the Internet through the NPS Planning, Environment, and Public Comment (PEPC) Web site (*http://parkplanning.nps.gov/cuva*); simply click on the link to the Plan of Operations and Environmental Assessment. You may mail comments to Meg Plona, Biologist, at the address shown below. Finally, you may hand-deliver comments to the National Park headquarters at the address shown below.

Before including your address, telephone number, electronic mail address, or other personal identifying information in your comments, you should be aware that your entire comment (including your personal identifying information) may be made publicly available at any time. While you can ask us in your comments to withhold your personal identifying information from public review, we cannot guarantee that we will be able to do so. We will make all submissions from organizations or businesses, from individuals identifying themselves as representatives or officials, of organizations or businesses, available for public inspection in their entirety.

ADDRESSES: Information will be available for public review and comment, either in person or by written request, at park headquarters for Cuyahoga Valley National Park located at 15610 Vaughn Road, Brecksville, Ohio 44141, or at the NPS (PEPC) Web site at *http://parkplanning.nps.gov/*.

FOR FURTHER INFORMATION CONTACT: Please contact Meg Plona, Biologist, Cuyahoga Valley National Park, 15610 Vaughn Road, Brecksville, Ohio 44141; *e-mail: meg_plona@nps.gov;* or telephone (330) 342–0764, extension 2.

Alan M. Hutchings,

Acting Director, Midwest Region.

[FR Doc. E9–16333 Filed 7–9–09; 8:45 am]

BILLING CODE 4310–MA–P

DEPARTMENT OF THE INTERIOR

Bureau of Reclamation

Equus Beds Aquifer Recharge and Recovery Project, Equus Beds Division, Wichita Project, KS

AGENCY: Bureau of Reclamation, Interior.

ACTION: Notice of availability of draft environmental impact statement (Draft EIS).

SUMMARY: Pursuant to the National Environmental Policy Act of 1969 (NEPA), the Bureau of Reclamation (Reclamation) has completed the Equus Beds Aquifer Recharge and Recovery Project Draft EIS. It is now available for public review and comment. The Draft EIS describes the development and environmental effects of two alternatives: (1) A no action alternative; and (2) an action alternative that meets the project purpose and need.

The U.S. Environmental Protection Agency and U.S. Fish and Wildlife Service are cooperating agencies providing assistance in the preparation of the Environmental Impact Statement (EIS) under the guidance of NEPA.

DATES: A 60-day public comment period begins with the publication of this notice. Written comments on the Draft EIS are due by September 11, 2009 and should be submitted to Reclamation listed in the **ADDRESSES** section.

ADDRESSES: Comments on the Draft EIS should be sent to the attention of Charles F. Webster, Bureau of Reclamation, 5924 NW. 2nd Street, Suite 200, Oklahoma City, OK 73127–6514. Comments may also be submitted in writing by facsimile or e-mail. Send facsimiles to the attention of Charles F. Webster at 405–470–4807. Send e-mail to *cwebster@usbr.gov* with Equus Beds Draft EIS Comment as the subject line.

Copies of the Draft EIS and related documents are available online from Reclamation's Web site at *http://www.usbr.gov/gp/nepa/quarterly.cfm*. Paper copies of the Draft EIS may be obtained by calling Charles F. Webster at 405–470–4831. Refer to the **SUPPLEMENTARY INFORMATION** section for locations of libraries and offices where copies of the Draft EIS are available for review.

FOR FURTHER INFORMATION CONTACT: Charles F. Webster at 405–470–4831 or *cwebster@usbr.gov*. Mail requests should be addressed to the Bureau of Reclamation at the address indicated in the **ADDRESSES** section.

SUPPLEMENTARY INFORMATION:

Locations where the Draft EIS may be reviewed:

- Halstead Public Library, 264 Main, Halstead, Kansas 67056;
- Hutchinson Public Library, 901 North Main, Hutchinson, KS 67501;
- Newton Public Library, 720 North Oak, Newton, KS 67114;
- Valley Center Public Library, 321 West First Street, Valley Center, KS 67147;
- Wichita Public Library, 223 South Main, Wichita, KS 67202;

• City of Wichita Water and Sewer Department, 455 North Main Street, 8th Floor, Wichita, KS 67202;

• Bureau of Reclamation, 5924 NW. 2nd Street, Suite 200, Oklahoma City, OK 73127.

Background: The ''Wichita Project Equus Beds Division Authorization Act of 2005'' (Pub. L. 109–299) authorizes the Secretary of the Interior to help the City of Wichita, Kansas, complete the Aquifer Recharge (Storage), and Recovery component (ASR is the acronym for this specific component or project) of Wichita's Integrated Local Water Supply Plan (ILWSP). The broader ILWSP was developed in 1993 to provide municipal and industrial water to Wichita and surrounding region through the year 2050. The ASR component would collect water from the Little Arkansas River basin and pipe it into the local Equus Beds aquifer for recharge and storage. Water would later be recovered from wells in the aquifer and used for the region's needs. The ASR component would become the ''Equus Beds Division'' of Reclamation's Wichita Project after completion. Operation, maintenance, replacement, and liability of the new division would be the responsibility of the City of Wichita.

Public Law 109–299 requires Reclamation to use, to the extent possible, the city's plans, designs, and analyses. The Federal funding cap would be 25% of total costs, or $30 million (indexed to January 2003), whichever is less. The full scale ASR component is estimated to cost about $500 million and is designed to recharge the Equus Beds aquifer with up to 100 million gallons of water per day (MGD).

Proposed Action: The Bureau of Reclamation (Reclamation) proposes to enter into a cost-share agreement with the City of Wichita for the Equus Beds aquifer ASR component. The entire ASR component is designed as one project consisting of four main phases (I–IV). Details and diagrams of the project are provided in the Draft EIS. Phase I is complete and has the capacity to divert and recharge up to 10 MGD. Phase IIa is currently being developed by the City independent of Federal cost-sharing. The proposed cost-share agreement would guide Federal expenditures during Phases IIb through IV. These phases of the project are the focus of the EIS. Reclamation would not own or operate the project at any point during design, construction, implementation, or any other process.

Reclamation would administer financing of Federal funds for the proposed action alternative identified as the 100 MGD ASR Plan with 60/40 Option. This alternative would collect, pre-treat, and recharge the Equus Beds aquifer with 100 MGD of water collected from the Little Arkansas River basin. The 60/40 Option refers to the 60 percent that would come from surface water taken directly from the Little Arkansas River and forty percent from induced infiltration (ground) wells located along the river bank.

Four recharge basins and 42 recharge wells connected by pipelines would be used to recharge the aquifer. Wells would be constructed outside of riparian zones where possible. Water pumped directly from the river would occur at two intakes. The first intake is at Halstead and was constructed during Phase I. The second intake is near Sedgwick and is being constructed as part of Phase IIa. The second intake would be modified during Phase IV to bring total ASR component diversion capacity to 100 MGD. When available, water would be piped to either the Phase I pre-sedimentation plant or to a second, proposed plant. Approximately 46 miles of pipeline, 62 miles of fiber optic cable, access roads, and other facilities would be built during Phases IIa–IV. The total cost of construction for the 100 MGD ASR Plan with 60/40 Option is currently estimated at about $500 million and includes about $115 million spent during Phases I and IIa.

Purpose and Need for the Action: The first purpose of the ASR component is to provide a safe and reliable future source of drinking water for Wichita while restoring the Equus Beds water table. Federal funding is authorized to help implement the ASR project and defray costs that would otherwise be passed on to local customers. Approximately 32% of Wichita's water supply comes from the Equus Beds. The aquifer also supplies irrigation and livestock water throughout the region. There are approximately 1,650 non-domestic water wells withdrawing about 157,000 acre-feet (51.2 billion gallons) of water per year from the aquifer. Use of the Equus Beds aquifer for both municipal and agricultural needs over the last 60 years has exceeded recharge. This has resulted in a drop in the water table of 40 feet in some places. Approximately 50% of the water used annually goes to agriculture, 34% to cities, 15% to industry, and 1% to other users.

A second purpose is to protect water quality in the aquifer. The decline in the Equus Beds aquifer water table has allowed water with higher salt content to enter the aquifer. Saltwater encroachment has become a problem because as freshwater levels have dropped, saltwater has infiltrated from the Arkansas River and other sources. This change in gradient between fresh and saltwater allows the movement of poor quality water into the aquifer. Continuing saltwater encroachment will degrade water quality to the point where the water would require much more treatment to make it drinkable. In addition, the use of saline water for irrigation would damage crops, reduce soil productivity, and increase salt infiltration through soils. The ASR component would help maintain a safe gradient between fresh and saltwater sections, protecting the aquifer from saltwater encroachment.

The ASR component is needed because population and resulting water demands of Wichita and surrounding areas are projected to increase markedly by 2050. Increasing demands and water use could further deplete the aquifer. The ASR component would provide a reliable and safe source of high quality water for Wichita's future. The project would:

• Store surface water underground thereby reducing evaporation and other losses.

• Reduce the gradient between fresh and saltwater sections within the aquifer to protect water quality.

• Capture surface water for storage during periods of high stream flow.

• Protect stored water from short-term, seasonal, annual, and long-term climate change.

Alternatives: The Draft EIS addresses the effects of one action alternative and a no action alternative. The alternatives for Federal action evaluated in the Draft EIS include:

(1) Proposed Action—Reclamation would enter into a cost share agreement to assist with construction of facilities and infrastructure to implement the 100 MGD ASR Plan with 60/40 Option.

(2) No Action Alternative—Under ''No Action,'' Reclamation would not enter into a cost-share agreement for reimbursement to the City for project implementation costs.

Public Disclosure Statement: Before including your name, address, telephone number, e-mail address, or other personal identifying information in your comment, you should be aware that your entire comment—including your personal identifying information—may be made publicly available at any time. While you can ask us in your comment to withhold your personal identifying information from public review, we cannot guarantee that we will be able to do so.

Dated: June 29, 2009.

Michael J. Ryan,

Regional Director, Great Plains Region.

[FR Doc. E9–16043 Filed 7–9–09; 8:45 am]

BILLING CODE 4310–MN–P

DEPARTMENT OF THE INTERIOR

National Park Service

General Management Plan, Environmental Impact Statement, Assateague Island National Seashore, Maryland and Virginia

AGENCY: National Park Service, Department of the Interior.

ACTION: Notice of Intent To Prepare a General Management Plan and Environmental Impact Statement, Assateague Island National Seashore.

SUMMARY: Pursuant to section 102(2)(C) of the National Environmental Policy Act (NEPA) of 1969, the National Park Service is preparing a General Management Plan and Environmental Impact Statement (GMP/EIS) for the Assateague Island National Seashore (AINS). The park comprises approximately 39,727 acres, located along the Atlantic coasts of Maryland and Virginia.

Prepared by park staff and planners in the NPS Northeast Region, with assistance from advisors and consultants, the GMP/EIS will propose a long-term approach to managing the AINS. Consistent with the park's purpose, NPS policy, and other laws and regulations, alternatives will be developed to guide the management of the park over the next 15 to 20 years. The GMP/EIS will address a range of management alternatives for natural and cultural resource protection, visitor use and interpretation, park carrying capacity, facilities development and operations. A ''no action'' alternative will also be considered and an agency preferred management alternative identified. The alternatives will incorporate various zoning and management prescriptions to ensure resource preservation and public appreciation of the park. The environmental consequences that could result from implementing the various alternatives will be evaluated for cultural and natural resources, visitor experience, park operations, and the socioeconomic environment. Major issues to be explored include: measures for the preservation of resources; indications of the types and general intensities of development; identification of, and implementation commitments for, visitor carrying capacities; and indications of potential boundary modifications.

Meeting Notices: The public is invited to express views, issues and concerns about the long-term management of the AINS early in the process through public meetings and other media; and will have an opportunity to review and comment on a draft GMP/EIS. Public scoping meetings will be announced by the NPS and noticed in local newspapers serving the area. Scoping and other periodic public meeting notices and information regarding the GMP/EIS will also be placed on the NPS Planning, Environment and Public Comment (PEPC) Web site (*http://parkplanning.nps.gov/asis*) for continuing public review and comment.

ADDRESSES: Information related to the GMP/EIS planning process and ongoing public involvement opportunities will be provided online at the AINS Web site (*http://www.nps.gov/asis*) and on the NPS PEPC Web site (*http://parkplanning.nps.gov/asis*). Requests to be added to the project mailing list may be made electronically through the NPS PEPC Web site or by directing requests to the contacts listed below.

FOR FURTHER INFORMATION CONTACT:

Trish Kicklighter, Superintendent, Assateague Island National Seashore, 7206 National Seashore Lane, Berlin, MD 21811, *Telephone:* 410–641–1443.

Megan Lang, Community Planner/Project Manager, National Park Service, Park Planning and Special Studies, 200 Chestnut Street, Philadelphia, PA 19106, *Telephone:* 215 597–8875.

SUPPLEMENTARY INFORMATION: If you wish to comment on the GMP/EIS, you may submit your comments by any one of several methods. You may mail comments to contacts listed above or you may submit comments electronically through the NPS PEPC Web site (*http://parkplanning.nps.gov/asis*). Before including your address, phone number, e-mail address, or other personal identifying information in your comment, you should be aware that your entire comment—including your personal identifying information—may be made publicly available at any time. While you can ask us in your comment to withhold your personal identifying information from public review, we cannot guarantee that we will be able to do so.

Dennis R. Reidenbach,

Regional Director, Northeast Region, National Park Service.

[FR Doc. E9–16327 Filed 7–9–09; 8:45 am]

BILLING CODE 4312–60–P

DEPARTMENT OF THE INTERIOR

National Park Service

Notice of Availability Draft Environmental Impact Statement and White-Tailed Deer Management Plan; Rock Creek Park, Washington, DC

AGENCY: National Park Service, Department of the Interior.

ACTION: Notice of Availability of a Draft Environmental Impact Statement and White-Tailed Deer Management Plan for Rock Creek Park, Washington, DC.

SUMMARY: Pursuant to the National Environmental Policy Act of 1969, 42 U.S.C. 4332(2)(C), the National Park Service announces the availability of a Draft Environmental Impact Statement (DEIS) and White-tailed Deer Management Plan for Rock Creek Park, Washington, District of Columbia. The White-tailed Deer Management Plan will support long-term protection, preservation, and restoration of native vegetation and other natural and cultural resources in Rock Creek Park. The DEIS describes four management alternatives, including the No Action Alternative (continue existing management) and three Action Alternatives, one of which is identified as the preferred alternative.

DATES: A Notice of Intent (NOI) was published in the **Federal Register** on September 20, 2006 (71 FR 182). A 60-day comment period was begun when the NOI was published. Public scoping meetings were held at the Rock Creek Park Nature Center November 1–2, 2006. Responses to public comment are addressed in the DEIS. The NPS will accept public comments on the DEIS until September 8, 2009. In addition, public meetings will be conducted at the Rock Creek Park Nature Center. Details on these public meetings will be available in local newspapers, on the NPS Web site *http://www.nps.gov/rocr*, or by contacting staff at Rock Creek Park by telephone at (202) 895–6000.

ADDRESSES: The DEIS and White-tailed Deer Management Plan will be available for public review on the NPS Planning, Environment and Public Comment (PEPC) Web site at *http://parkplanning.nps.gov/rocr* by selecting the link ''Deer Management Plan for Rock Creek Park.'' Bound copies of the DEIS and White-tailed Deer Management Plan will also be available at the Rock Creek Park Nature Center, 5200 Glover Road, NW., Washington, DC; at Rock Creek Park Headquarters, 3545 Williamsburg Lane, NW., Washington, DC; and at public libraries adjacent to Rock Creek Park.

FOR FURTHER INFORMATION CONTACT: Adrienne A. Coleman, Superintendent, Rock Creek Park, 3545 Williamsburg Lane, NW., Washington, DC 20008, (202) 895–6000.

Before including your address, phone number, e-mail address, or other personal identifying information in your comment, you should be aware that your entire comment—including your personal identifying information—may be made publicly available at any time. Although you can ask us in your comment to withhold your personal identifying information from public review, we cannot guarantee that we will be able to do so. We will make all submissions from organizations, businesses, or individuals identifying themselves as representatives or officials of organizations or businesses, available for public inspection in their entirety.

SUPPLEMENTARY INFORMATION: The DEIS evaluates four alternatives for managing white-tailed deer in the park. The document describes and analyzes the environmental impacts of the No-Action Alternative and three Action Alternatives. When approved, the plan will guide deer management actions in Rock Creek Park over the next 15 years.

Alternative A (No Action) would continue the existing deer management actions and policies of monitoring vegetation, deer density and relative numbers, using limited protection fencing and deer repellents to protect rare plants in natural areas and small areas in landscaped and cultural areas, data management, continuing current educational and interpretive measures, as well as inter-jurisdictional communication; no new deer management actions would be implemented.

Alternative B would include all actions described under Alternative A, but would incorporate several non-lethal actions to protect forest seedlings, promote forest regeneration, and gradually reduce the deer numbers in the park. Additional actions under Alternative B would include large-scale exclosures (fencing) and reproductive control of does via sterilization and immunocontraceptives when feasible.

Alternative C would include all actions described under Alternative A, but would also incorporate two lethal deer management actions to reduce the herd size. Additional actions under Alternative C would include reduction of the deer herd by either sharpshooting or capture and euthanasia of individual deer. Capture and euthanasia of individual deer would be an approach used in limited circumstances where sharpshooting may not be appropriate.

Alternative D (the NPS Preferred Alternative) would include all actions described under Alternative A, but would also include a combination of certain additional lethal and non-lethal actions from Alternatives B and C to reduce deer herd numbers. The lethal actions would include both sharpshooting and capture/euthanasia and would be taken initially to quickly reduce the deer herd numbers. Population maintenance would be conducted via reproductive control methods if these are available and feasible. Sharpshooting would be used as a default option for maintenance if reproductive control methods would prove to be unavailable and infeasible. Alternative D would fully meet the plan objectives and has more certainty of success than the other alternatives analyzed. The relatively rapid reduction in both deer density and browsing pressure on native plant communities and species of special concern would provide beneficial impacts to the natural and cultural resources of the park.

Dated: May 1, 2009.

Margaret O'Dell,

Regional Director, National Capital Region.

[FR Doc. E9–16328 Filed 7–9–09; 8:45 am]

BILLING CODE 4312–34–P

DEPARTMENT OF THE INTERIOR

National Park Service

Notice of Availability of a Record of Decision, White-tailed Deer Management Plan and Final Environmental Impact Statement Catoctin Mountain Park, MD

AGENCY: National Park Service, Department of the Interior.

ACTION: Notice of Availability of a Record of Decision on the White-tailed Deer Management Plan/Final Environmental Impact Statement for Catoctin Mountain Park, Maryland.

SUMMARY: Pursuant to the National Environmental Policy Act of 1969, 42 U.S.C. 4332(2)(C), the National Park Service announces the availability of the Record of Decision for the White-tailed Deer Management Plan/Final Environmental Impact Statement (Plan/FEIS) for Catoctin Mountain Park, Maryland. The Plan/FEIS analyzed four alternatives. Alternative C, the selected alternative, includes two lethal actions that will be used in combination to reduce and control deer herd numbers. Qualified federal employees or contractors will conduct sharpshooting to reduce the deer population, and individual deer will be captured and euthanized in certain circumstances where sharpshooting is not appropriate.

DATES: The Record of Decision for the project was approved on April 17, 2009, by the Regional Director, National Capital Region, National Park Service. As soon as practicable, the National Park Service will begin to implement the Preferred Alternative contained in the Final Environmental Impact Statement issued on December 12, 2008.

FOR FURTHER INFORMATION CONTACT: Copies of the Record of Decision may be obtained from Becky Loncosky, Park Biologist, Catoctin Mountain Park, 6602 Foxville Road, Thurmont, Maryland 21788, (301) 416–0135, or Online at *http://parkplanning.nps.gov/cato*.

SUPPLEMENTARY INFORMATION: Alternative A was the No Action Alternative studied by the Plan/EIS. The three Action Alternatives each used different combinations of non-lethal and lethal management tools to reduce the deer population and thus address declining forest regeneration and ensure that natural processes (including the presence of deer) support native vegetation, wildlife, and the cultural landscape of the park.

All Action Alternatives included limited fencing, use of repellents around landscaped areas, deer and vegetation monitoring, data management, and research, as currently implemented under the No Action Alternative. Action Alternatives also utilize an adaptive management strategy in order to better manage based on uncertainty concerning the impacts that the change in deer population densities will have on vegetation recovery. By using an adaptive management approach, park managers will be able to change the timing or intensity of management treatments to better meet the goals of the plan as new information is obtained.

Alternative B combined several non-lethal actions including large-scale exclosures (fencing), additional use of repellents in limited areas, and reproductive control of does to gradually reduce the deer population in the park.

Alternative C will utilize two lethal actions in combination to reduce and control deer herd numbers. Qualified federal employees or contractors will conduct sharpshooting to reduce the deer population, and individual deer will be captured and euthanized in circumstances where sharpshooting is determined to be inappropriate.

Alternative D combined elements from alternatives B and C to include sharpshooting, capture and euthanasia, and reproductive control of does. For all alternatives, the full range of foreseeable

environmental consequences was assessed and appropriate mitigating measures were identified.

The Record of Decision includes a description of the project's background, a statement of the decision made, synopses of other alternatives considered, the basis for the decision, findings on impairment of park resources and values, a description of the environmentally preferred alternative, a listing of measures to minimize environmental harm, and an overview of public involvement in the decision-making process.

Dated: June 2, 2009.

Margaret O'Dell,

Regional Director, National Capital Region.

[FR Doc. E9–16329 Filed 7–9–09; 8:45 am]

BILLING CODE 4312–59–P

DEPARTMENT OF JUSTICE

Notice of Lodging of Consent Decree Under the Comprehensive Environmental Response, Compensation, and Liability Act

Notice is hereby given that on June 29, 2009, a proposed Consent Decree in *United States of America* v. *Alcatel-Lucent USA Inc., et al.,* Civil Action No. 09–CV–2902, was lodged with the United States District Court for the Eastern District of Pennsylvania.

In this action the United States sought to recover from the defendants response costs incurred by the United States Environmental Protection Agency (''EPA'') in responding to releases or threatened releases of hazardous substances at or from the Heleva Landfill Site, located in North Whitehall Township, Lehigh County, Pennsylvania (the ''Site''). The Consent Decree memorializes the settlement that requires the settling parties, Alcatel-Lucent USA Inc. as successor in interest to AT&T Inc., Olin Corporation, and Pfizer Inc., to reimburse EPA's past and future response costs related to the Site.

The Consent Decree requires the settling parties to pay to the EPA Hazardous Substance Superfund the principal sum of $603,047.49 plus interest, in two installments. The first payment of $433,553.75 is due within forty-five (45) days of entry of the Consent Decree. The second payment of $169,493.74, plus interest, is due within two hundred and seventy (270) days of entry of the Consent Decree. The Consent Decree also requires that the settling parties pay future response costs incurred by EPA.

The Department of Justice will receive for a period of thirty (30) days from the date of this publication comments relating to the Decree. Comments should be addressed to the Assistant Attorney General, Environmental and Natural Resources Division, and either e-mailed to *pubcomment-ees.enrd@usdoj.gov* or mailed to P.O. Box 7611, U.S. Department of Justice, Washington, DC 20044–7611, and should refer to *United States of America* v. *Alcatel-Lucent USA Inc., et al.*, Civil Action No. 09–CV–2902 (E.D. Pa.), D.J. Ref. 90–11–2–684/1.

The Decree may be examined at the Office of the United States Attorney, Eastern District of Pennsylvania, 615 Chestnut Street, Suite 1250, Philadelphia, PA 19106, and at U.S. EPA Region III, 1650 Arch Street, Philadelphia, PA 19103. During the public comment period, the Decree, may also be examined on the following Department of Justice Web site, *http://www.usdoj.gov/enrd/Consent_Decrees.html.* A copy of the Decree may also be obtained by mail from the Consent Decree Library, P.O. Box 7611, U.S. Department of Justice, Washington, DC 20044–7611 or by faxing or e-mailing a request to Tonia Fleetwood (*tonia.fleetwood@usdoj.gov*), fax no. (202) 514–0097, phone confirmation number (202) 514–1547. In requesting a copy from the Consent Decree Library, please enclose a check in the amount of $9.25 (25 cents per page reproduction cost) payable to the U.S. Treasury or, if by e-mail or fax, forward a check in that amount to the Consent Decree Library at the stated address.

Maureen Katz,

Assistant Chief, Environmental Enforcement Section, Environment and Natural Resources Division.

[FR Doc. E9–16308 Filed 7–9–09; 8:45 am]

BILLING CODE 4410–15–P

DEPARTMENT OF JUSTICE

Notice of Public Comment Period for Proposed Consent Decree and Settlement Agreement Under the Clean Air Act, RCRA and CERCLA

Under 28 CFR 50.7, notice is hereby given that, for a period of 30 days, the United States will receive public comments on a proposed Consent Decree and Settlement Agreement (''Decree'') in *In Re: G–I Holdings, Inc., et al.,* (Bankr. Case Nos. 01–30135 (RG) and 01–38790 (RG) and *United States* v. *G–I Holdings, Inc.* (Adversary Proceeding No. 08–2531 (RG), which was lodged with the U.S. Bankruptcy Court for the District of New Jersey on July 2, 2009. The United States, on behalf of U.S. Environmental Protection Agency (''EPA''), U.S. Department of the Interior (''DOI''), the U.S. National Oceanic and Atmospheric Administration (''NOAA''), the State of Vermont, and the debtor, G–I Holdings, Inc. (''G–I'') entered into the settlement under the Comprehensive Environmental Response, Compensation and Liability Act (''CERCLA''), 42 U.S.C. 9601 *et seq.*; the Resource Conservation and Recovery Act (''RCRA''), 42 U.S.C. 6901 *et seq.*; the Clean Air Act, 42 U.S.C. 7401 *et seq.*; the Federal Water Pollution Control Act (''FWPCA''), 33 U.S.C. 1251 *et seq.*; and Title 10, Vermont Annotated Statutes §§ 1259, 1274, 6610a, 6615 and 6616. The proposed Decree would resolve the proofs of claim of the United States on behalf of EPA, DOI and NOAA, and the State of Vermont, and would also resolve the Adversary Proceeding *United States* v. *G. Holdings, Inc.,* Adv. Pro. No. 08–2531 (RG), which seeks injunctive relief against G–I under section 303 of the Clean Air Act, 42 U.S.C. 7603, and section 7003 of RCRA, 42. U.S.C. 6973.

The Decree addresses 13 hazardous waste sites across the country, including the Vermont Asbestos Mine Group Site (''the VAG Site''), in Eden and Lowell, Vermont. Under the terms of the settlement, G–I will establish and fund a Custodial Trust which will take immediate steps to secure the VAG Site by constructing fencing, gates and road barriers, and posting security guards. In addition, the Custodial Trust will conduct air monitoring and dust suppression, if determined to be necessary, and will assist and/or contribute to the off-site investigative and abatement work undertaken by EPA and the State of Vermont, over eight years, at a cost of up to $7.75 million.

The proposed settlement also requires G–I to reimburse EPA for remediation of the VAG Site and off-site locations where waste from the mine may be located up to $300 million paid at 8.6 cents on the dollar. The United States' and Vermont's claims for natural resource damages are resolved through a series of payments over nine years totaling $850,000. The settlement also resolves EPA's claims for past and future response costs and NOAA's claim for natural resource damages at nine Generator Sites for $104,615.

Finally, under the terms of the settlement the United States has up to 10 years to file suit to collect on monetary claims related to three sites in New Jersey and New York, the GAF Chemicals Site, the LCP Chemicals Inc. Superfund Site, and the Diamond Alkali Superfund Site, referred to as the

''Linden Sites.'' The United States retains the right to seek relief against the reorganized G–I for CERCLA response costs and/or natural resource damages at these three sites, and if G–I is found liable at the Linden Sites after confirmation of G–I's Plan of Reorganization, the claims will be paid at 8.6 cents on the dollar.

The Department of Justice will receive, for a period of thirty (30) days from the date of this publication, comments relating to the Decree. Comments should be addressed to the Assistant Attorney General, Environment and Natural Resources Division, and either e-mailed to *pubcomment-ees.enrd@usdoj.gov* or mailed to P.O. Box 7611, U.S. Department of Justice, Washington, DC 20044–7611, and should refer to *In Re: G–I Holdings, Inc., et al.,* D.J. Ref. 90–11–3–07425.

During the public comment period, the Decree may be examined on the following Department of Justice Web site, *http://www.usdoj.gov/enrd/Consent_Decrees.html.* A copy of the Decree may also be obtained by mail from the Consent Decree Library, P.O. Box 7611, U.S. Department of Justice, Washington, DC 20044–7611 or by faxing or e-mailing a request to Tonia Fleetwood (*tonia.fleetwood@usdoj.gov*), fax no. (202) 514–0097, phone confirmation number (202) 514–1547. In requesting a copy from the Consent Decree Library, please enclose a check in the amount of $33.50 (25 cents per page reproduction cost) payable to the U.S. Treasury or, if by e-mail or fax, forward a check in that amount to the Consent Decree Library at the stated address.

Maureen Katz,

Assistant Chief, Environmental Enforcement Section, Environment and Natural Resources Division.

[FR Doc. E9–16309 Filed 7–9–09; 8:45 am]

BILLING CODE 4410–15–P

DEPARTMENT OF JUSTICE

Bureau of Prisons

Annual Determination of Average Cost of Incarceration

AGENCY: Bureau of Prisons, Justice.

ACTION: Notice.

SUMMARY: The fee to cover the average cost of incarceration for Federal inmates in Fiscal Year 2008 was $25,895. The average annual cost to confine an inmate in a Community Corrections Center for Fiscal Year 2008 was $23,882.

DATES: *Effective Date:* July 10, 2009.

ADDRESSES: Office of General Counsel, Federal Bureau of Prisons, 320 First St., NW., Washington, DC 20534.

FOR FURTHER INFORMATION CONTACT: Sarah Qureshi, (202) 307–2105.

SUPPLEMENTARY INFORMATION: 28 CFR part 505 allows for assessment and collection of a fee to cover the average cost of incarceration for Federal inmates. We calculate this fee by dividing the number representing Bureau facilities' monetary obligation (excluding activation costs) by the number of inmate-days incurred for the preceding fiscal year, and then by multiplying the quotient by 365.

Under § 505.2, the Director of the Bureau of Prisons determined that, based upon fiscal year 2008 data, the fee to cover the average cost of incarceration for Federal inmates in Fiscal Year 2008 was $25,895. In addition, the average annual cost to confine an inmate in a Community Corrections Center for Fiscal Year 2008 was $23,882.

Harley G. Lappin,

Director, Bureau of Prisons.

[FR Doc. E9–16304 Filed 7–9–09; 8:45 am]

BILLING CODE 4410–05–P

DEPARTMENT OF LABOR

OCCUPATIONAL SAFETY AND HEALTH ADMINISTRATION

[Docket No. OSHA–2009–0020]

Advisory Committee on Construction Safety and Health (ACCSH) and ACCSH Work Group; Meetings

AGENCY: Occupational Safety and Health Administration (OSHA), Department of Labor.

ACTION: Announcement of a meeting of the Advisory Committee on Construction Safety and Health (ACCSH) and ACCSH Work Group meetings.

SUMMARY: ACCSH will meet July 30 and 31, 2009, in Washington, DC. In conjunction with ACCSH's meeting its Work Groups will meet July 28 and 29, 2009.

DATES: *ACCSH:* ACCSH will meet from 8:30 a.m. to 4:30 p.m., Thursday, July 30, 2009, and from 8:30 a.m. to Noon, Friday, July 31, 2009.

ACCSH Work Groups: ACCSH Work Groups will meet Tuesday, July 28, and Wednesday, July 29, 2009. (For the Work Group meeting times, see the Work Group Schedule in the **SUPPLEMENTARY INFORMATION** section of this notice.)

Submission of comments, requests to speak and requests for special accommodation: Comments, requests to speak at the ACCSH meeting and requests for special accommodations for the ACCSH and ACCSH Work Group meetings must be submitted (postmarked, sent, transmitted) by July 17, 2009.

Submission of speaker presentations: Persons who request to speak at the ACCSH meeting must submit materials, written or electronic (*e.g.,* PowerPoint), that they will present at the ACCSH meeting by July 23, 2009.

ADDRESSES:

ACCSH and ACCSH Work Group Meetings: ACCSH and ACCSH Work Group meetings will be held in Rooms N–3437 A–C of the Frances Perkins Building, U.S. Department of Labor, 200 Constitution Avenue NW., Washington, DC 20210.

Submission of comments, requests to speak, and speaker presentations: Interested persons may submit comments, requests to speak at the ACCSH meeting, and speaker presentations using one of the following methods:

Electronically: You may submit materials, including attachments, electronically at *http://www.regulations.gov*, which is the Federal eRulemaking Portal. Follow the on-line instructions for making submissions.

Facsimile (FAX): If your submission, including attachments, does not exceed 10 pages, you may fax it to the OSHA Docket Office at (202) 693–1648.

Mail, hand delivery, express mail, messenger, or courier service: Submit three copies of your submissions to the OSHA Docket Office, Room N–2625, U.S. Department of Labor, 200 Constitution Avenue, NW., Washington, DC 20210; telephone (202) 693–2350 (TTY (877) 889–5627). Deliveries (hand deliveries, express mail, messenger, and courier service) are accepted during the Department of Labor's and OSHA Docket Office's normal business hours, 8:15 a.m.–4:45 p.m., E.T., weekdays.

Requests for special accommodations: Submit requests for special accommodations to Ms. Veneta Chatmon, OSHA, Office of Communications, Room N–3647, U.S. Department of Labor, 200 Constitution Avenue, NW., Washington, DC 20210; telephone (202) 693–1999; e-mail *chatmon.veneta@dol.gov*.

Instructions: All submissions, requests to speak, speaker presentations, and requests for special accommodations must include the Agency name (Occupational Safety and

Health Administration) and the docket number for this meeting (Docket No. OSHA–2009–0020). Because of security-related procedures, submissions by regular mail may experience significant delays. For information about security procedures for submitting materials by hand delivery, express mail, messenger, or courier service, contact the OSHA Docket Office.

Comments, requests to speak, and speaker presentations, including personal information, are placed in the public docket without change and may be available online. Therefore, OSHA cautions against submitting personal information such as social security numbers and birthdates. For further information on submitting comments, requests to speak, speaker presentations, and requests for public accommodation, see the Public Participation information in the **SUPPLEMENTARY INFORMATION** section of this notice.

To read or download documents in the public docket for this ACCSH meeting, go to Docket No. OSHA–2009–0020 at *http://www.regulations.gov*. All documents in the public docket are listed in the *http://www.regulations.gov* index; however, some documents (*e.g.,* copyrighted material) are not available to read on line or download from that Web page. All documents, including copyrighted material, are available for inspection and copying at the OSHA Docket Office. Please contact the OSHA Docket Office for assistance making submissions to or obtaining materials from the public docket.

FOR FURTHER INFORMATION CONTACT:

For press inquiries: Ms. Jennifer Ashley, OSHA, Office of Communications, Room N–3647, U.S. Department of Labor, 200 Constitution Avenue, NW., Washington, DC 20210; telephone (202) 693–1999.

For general information about ACCSH and ACCSH meetings: Mr. Michael Buchet, OSHA, Directorate of Construction, Room N–3468, U.S. Department of Labor, 200 Constitution Avenue, NW., Washington, DC 20210; telephone (202) 693–2020; e-mail *buchet.michael@dol.gov.*

SUPPLEMENTARY INFORMATION:

ACCSH Meeting

ACCSH will meet Thursday, July 30, and Friday, July 31, 2009, in Washington, DC. The meeting is open to the public.

ACCSH is authorized to advise the Secretary of Labor and Assistant Secretary of Labor for Occupational Safety and Health in the formulation of standards affecting the construction industry and on policy matters arising in the administration of the safety and health provisions of the Contract Work Hours and Safety Standards Act (Construction Safety Act) (40 U.S.C. 3701 *et seq.*) and the Occupational Safety and Health Act of 1970 (29 U.S.C. 651 *et seq.*). (*See* also 29 CFR 1911.10 and 1912.3).

The agenda for this meeting includes:

- *Remarks from the Office of the Assistant Secretary, Directorates and Office Directors;*
- *Construction Enforcement Overview and Field Perspective;*
- *Construction Stimulus Funding Update/Construction Data Overview;*
- *Stimulus Impact on Wind Power Generation;*
- *Work Group Reports, Work Group and Committee Administration.*

For updates on the agenda for this meeting, contact Mr. Buchet. ACCSH meetings are transcribed and detailed minutes of the meetings are prepared. Meeting transcripts and minutes are included in the record of ACCSH meetings, which is available at *http://www.regulations.gov.* Work Group reports are also included in the ACCSH meeting record.

ACCSH Work Group Meetings

In conjunction with the ACCSH meeting, the following ACCSH Work Groups will meet on Tuesday, *July 28, 2009:*

- Diversity—Women in Construction—8:15 to 9:45 a.m.;
- Multilingual—10 to 11:30 a.m.;
- Residential Fall Protection—12:30 to 2 p.m.;
- Trenching—2:15 to 3:45 p.m.; and
- Powered Fastening Tools (Nail guns)—4 to 5:30 p.m.

The following ACCSH Work Groups will meet on Wednesday, *July 29, 2009:*

- Regulatory Compliance (Focused Inspections)—8:30 to 10 a.m.;
- ROPS (Roll Over Protective Structures)—10:15 to 11:45 a.m.;
- Silica—12:45 to 2:15 p.m.; and
- Education and Training (OTI)—2:30 to 4 p.m.

For additional information on ACCSH Work Group meetings or participating in them, please contact Mr. Buchet or look on the ACCSH page on OSHA's Web page at *http://www.osha.gov*.

Public Participation

ACCSH Meetings and ACCSH Work Group Meetings: ACCSH and ACCSH Work Group meetings are open to the public. Individuals needing special accommodations for ACCSH or ACCSH Work Group meetings please contact Ms. Chatmon (*see* **ADDRESSES** section).

Submission of written comments and requests to address ACCSH: Interested persons may submit comments, request to speak at ACCSH meetings, and speaker presentations (1) electronically, (2) by FAX, or (3) by hard copy (mail, hand delivery, express mail, messenger, and courier). All submissions must include the docket number for this ACCSH meeting (Docket No. OSHA–2009–0020). Individuals who want to address ACCSH at the meeting must submit their requests by July 17, 2009. The request must state the amount of time desired to speak, the interest the presenter represents (*e.g.,* businesses, organizations, affiliations), if any, and a brief outline of the presentation. Speakers must submit a copy of any written or electronic (*i.e.* PowerPoint) material they plan to present by July 23, 2009.

Alternately at the ACCSH meeting, individuals may also request to address ACCSH by signing the public comment request sheet and listing the interests they represent, if any, and the topic(s) to be addressed. In addition, they must provide 20 hard copies of any materials, written or electronic, that they plan to present to ACCSH. Such requests may be granted at the ACCSH Chair's discretion and as time and circumstances permit.

Comments, requests to speak and speaker presentations are included without change in the meeting record and may be made available online at *http://www.regulations.gov*. Therefore, OSHA cautions interested parties about submitting certain personal information such as birthdates and social security numbers.

Access to the record of ACCSH meetings: To read or download submissions and the record of this ACCSH meeting, including Work Group reports, go to Docket No. OSHA–2009–0020 at *http://www.regulations.gov.* The meeting record and submissions for this meeting are listed in the *http://www.regulations.gov* index; however, some documents (*e.g.,* copyrighted materials) are not publicly available through the Web page. The record and all submissions, including materials not available through *http://www.regulations.gov* are available for inspection and copying in the OSHA Docket Office (*see* **ADDRESSES** section).

Authority and signature: Mr. Jordan Barab, Acting Assistant Secretary of Labor for Occupational Safety and Health, directed the preparation of this notice under the authority granted by section 7 of the Occupational Safety and Health Act of 1970 (29 U.S.C. 656), section 107 of the Contract Work Hours and Safety Standards Act (Construction Safety Act) (40 U.S.C. 3704), 29 CFR

1911 and 1912, and Secretary of Labor's Order No. 5–2007 (72 FR 31160).

Signed at Washington, DC this 6th day of July 2009.

Jordan Barab,

Acting Assistant Secretary of Labor for Occupational Safety and Health.

[FR Doc. E9–16310 Filed 7–9–09; 8:45 am]

BILLING CODE 4510–26–P

THE NATIONAL FOUNDATION ON THE ARTS AND THE HUMANITIES

Federal Council on the Arts and the Humanities Arts and Artifacts Domestic Indemnity Panel Advisory Committee

AGENCY: The National Endowment for the Humanities.

ACTION: Notice of meeting.

Pursuant to the provisions of the Federal Advisory Committee Act (Pub. L. 92–463 as amended), notice is hereby given that a meeting of the Arts and Artifacts Domestic Indemnity Panel of the Federal Council on the Arts and the Humanities will be held at 1100 Pennsylvania Avenue, NW., Washington, DC 20506, in Room 714, from 9:30 a.m. to 5 p.m., on Monday, July 27, 2009.

The purpose of the meeting is to review applications for Certificates of Indemnity submitted to the Federal Council on the Arts and the Humanities for exhibitions beginning after October 1, 2009.

Because the proposed meeting will consider financial and commercial data and because it is important to keep values of objects, methods of transportation and security measures confidential, pursuant to the authority granted me by the Chairman's Delegation of Authority to Close Advisory Committee Meetings, dated July 19, 1993, I have determined that the meeting would fall within exemption (4) of 5 U.S.C. 552(b) and that it is essential to close the meeting to protect the free exchange of views and to avoid interference with the operations of the Committee.

It is suggested that those desiring more specific information contact the Advisory Committee Management Officer, Michael P. McDonald, 1100 Pennsylvania Avenue, NW., Washington, DC 20506, or call 202/606–8322.

Michael P. McDonald,

Advisory Committee Management Officer.

[FR Doc. E9–16302 Filed 7–9–09; 8:45 am]

BILLING CODE 7536–01–P

NUCLEAR REGULATORY COMMISSION

[NRC–2009–0303]

Notice of Availability of Draft Interim Staff Guidance Document for Fuel Cycle Facilities

AGENCY: Nuclear Regulatory Commission.

ACTION: Notice of availability.

FOR FURTHER INFORMATION CONTACT: Tamara D. Powell, Nuclear Process Engineer, Technical Support Branch, Division of Fuel Cycle Safety and Safeguards, Office of Nuclear Material Safety and Safeguards, U.S. Nuclear Regulatory Commission, Washington, DC 20005–0001. Telephone: (301) 492–3211; Fax: (301) 492–3363; E-mail: *Tamara.Powell@nrc.gov.*

SUPPLEMENTARY INFORMATION:

I. Introduction

The U.S. Nuclear Regulatory Commission (NRC) continues to prepare and issue Interim Staff Guidance (ISG) documents for fuel cycle facilities. These ISG documents provide clarifying guidance to the NRC staff when reviewing licensee integrated safety analyses, license applications, amendment requests, or other related licensing activities for fuel cycle facilities under Title 10 of the *Code of Federal Regulations* (10 CFR) part 70. Draft FCSS–ISG–11, Revision 0, ''10 CFR part 70, Appendix A—Reportable Safety Events,'' Revision 0, is now being issued for public comments.

II. Summary

The purpose of this notice is to notify the public of the availability for review and comments of Draft FCSS–ISG–11, Revision 0, ''10 CFR part 70, Appendix A—Reportable Safety Events,'' which provides guidance addressing the event reporting criteria in Appendix A to 10 CFR part 70.

Upon receiving public comments, the NRC staff will evaluate the comments and make a determination whether or not to incorporate the comments, as appropriate. The NRC staff will incorporate the guidance from the approved ISG into a future regulatory guide on event reporting requirements for fuel cycle facility licensees.

DATES: Comments may be submitted by August 10, 2009. Comments received after this date will be considered, if it is practical to do so, but the NRC is able to ensure consideration only for comments received on or before this date.

ADDRESSES: You may submit comments by any one of the following methods. Please include Docket ID NRC–2009–0303 in the subject line of your comments. Comments submitted in writing or in electronic form will be posted on the NRC Web site and on the Federal rulemaking Web site Regulations.gov. Because your comments will not be edited to remove any identifying or contact information, the NRC cautions you against including any information in your submission that you do not want to be publicly disclosed.

We request that any party soliciting or aggregating comments received from other persons for submission to the NRC inform those persons that the NRC will not edit their comments to remove any identifying or contact information, and therefore they should not include any information in their comments that they do not want publicly disclosed.

Federal Rulemaking Web site: Go to *http://www.regulations.gov* and search for documents filed under Docket ID NRC–2009–0303. Address questions about NRC dockets to Carol Gallagher 301–492–3668; e-mail *Carol.Gallagher@nrc.gov.*

Mail comments to: Michael T. Lesar, Chief, Rulemaking and Directives Branch (RDB), Office of Administration, Mail Stop: TWB–05–B01M, U.S. Nuclear Regulatory Commission, Washington, DC 20555–0001, or by fax to RDB at (301) 492–3446.

III. Further Information

The NRC maintains an Agencywide Documents Access and Management System (ADAMS), which provides text and image files of NRC's public documents. These documents may be accessed through the NRC's Public Electronic Reading Room on the Internet at *http://www.nrc.gov/reading-rm/adams.html.* The ADAMS accession number for the document related to this notice is provided in the following table.

Interim staff guidance	ADAMS Accession Number
FCSS Interim Staff Guidance–11, Revision 0	ML091730073

This document may also be viewed electronically on the public computers located at the NRC's PDR, O1–F21, One White Flint North, 11555 Rockville Pike, Rockville, MD 20852. The PDR reproduction contractor will copy documents for a fee. Persons who do not have access to ADAMS or who encounter problems in accessing the documents located in ADAMS should contact the NRC Public Document Room (PDR) reference staff at 1 (800) 397–4209, (301) 415–4737, or via e-mail to *pdr@nrc.gov.*

Dated at Rockville, Maryland, this 30th day of June 2009.

For the Nuclear Regulatory Commission.

Marissa G. Bailey,

Deputy Director, Special Projects and Technical Support Directorate, Division of Fuel Cycle Safety and Safeguards, Office of Nuclear Material Safety and Safeguards.

[FR Doc. E9–16352 Filed 7–9–09; 8:45 am]

BILLING CODE 7590–01–P

NUCLEAR REGULATORY COMMISSION

[NRC–2009–0304]

Draft Regulatory Guide: Issuance, Availability

AGENCY: Nuclear Regulatory Commission.

ACTION: Issuance, Availability of Draft Regulatory Guide (DG)–1176.

FOR FURTHER INFORMATION CONTACT: Nanette Gilles, U.S. Nuclear Regulatory Commission, Washington, DC 20555–0001, telephone: (301) 415–1180 or e-mail *Nanette.Gilles@nrc.gov.*

SUPPLEMENTARY INFORMATION:

I. Introduction

The U.S. Nuclear Regulatory Commission (NRC) is issuing for public comment a draft guide in the agency's ''Regulatory Guide'' series. This series was developed to describe and make available to the public such information as methods that are acceptable to the NRC staff for implementing specific parts of the NRC's regulations, techniques that the staff uses in evaluating specific problems or postulated accidents, and data that the staff needs in its review of applications for permits and licenses.

The draft regulatory guide, entitled, ''Guidance for the Assessment of Beyond-Design-Basis Aircraft Impacts,'' is temporarily identified by its task number, DG–1176, which should be mentioned in all related correspondence. This guide describes a method that the staff of the NRC considers acceptable for use in satisfying its regulations in Title 10 of the *Code of Federal Regulations* (10 CFR) part 50, ''Domestic Licensing of Production and Utilization Facilities,'' regarding the consideration of aircraft impacts for new nuclear power reactors. In particular, this guide endorses the methodologies described in the industry guidance document, Nuclear Energy Institute (NEI) 07–13, ''Methodology for Performing Aircraft Impact Assessments for New Plant Designs,'' Revision 7, issued May 2009. The public version of NEI 07–13 can be found in the NRC's Agencywide Documents Access and Management System (ADAMS), Accession No. ML091490723. Publicly available documents created or received at the NRC are available electronically at the NRC's Electronic Reading Room at *http://www.nrc.gov/reading-rm/adams.html.* From this page, the public can enter the ADAMS database, which provides text and image files of the NRC's public documents. Persons who do not have access to ADAMS, or who have problems accessing the documents located in ADAMS, may contact the reference staff in the NRC's Public Document Room at 1–800–397–4209 or 301–415–4737, or by e-mail at *pdr.resource@nrc.gov.* Nonpublic versions of this regulatory guide and NEI 07–13 contain more specific details about the methodology for performing aircraft impact assessments and will be handled under Safeguards Information (SGI) controls. Because the nonpublic guidance documents will contain SGI, the documents will only be made available to those individuals with a need to know and who are otherwise qualified to have access to SGI. Plant designers (including their employees and agents) who meet the NRC's requirements for access to SGI will be entitled to use the more detailed guidance documents to perform the aircraft impact assessments.

II. Further Information

The NRC staff is soliciting comments on DG–1176. Comments may be accompanied by relevant information or supporting data, and should mention DG–1176 in the subject line. Comments submitted in writing or in electronic form will be made available to the public in their entirety through the NRC's Agencywide Documents Access and Management System (ADAMS). Personal information will not be removed from your comments. You may submit comments by any of the following methods:

1. *Mail comments to:* Rulemaking and Directives Branch, Mail Stop: TWB–05–B01M, Office of Administration, U.S. Nuclear Regulatory Commission, Washington, DC 20555–0001.

2. *Federal e-Rulemaking Portal:* Go to *http://www.regulations.gov* and search for documents filed under Docket ID [NRC–2009–0304]. Address questions about NRC dockets to Carol Gallagher, 301–492–3668; e-mail *Carol.Gallagher@nrc.gov.*

3. *Fax comments to:* Rulemaking and Directives Branch, Office of Administration, U.S. Nuclear Regulatory Commission at (301) 492–3446.

Requests for technical information about DG–1176 may be directed to the DG–1176 may be directed to the NRC contact, Nanette Gilles at (301) 415–1180 or e-mail to *Nanette.Gilles@nrc.gov.*

Comments would be most helpful if received by September 8, 2009. Comments received after that date will be considered if it is practical to do so, but the NRC is able to ensure consideration only for comments received on or before this date. Although a time limit is given, comments and suggestions in connection with items for inclusion in guides currently being developed or improvements in all published guides are encouraged at any time.

Electronic copies of DG–1176 are available through the NRC's public Web site under Draft Regulatory Guides in the ''Regulatory Guides'' collection of the NRC's Electronic Reading Room at *http://www.nrc.gov/reading-rm/doc-collections/.* Electronic copies are also available in ADAMS (*http://www.nrc.gov/reading-rm/adams.html*), under Accession No. ML073170252.

In addition, regulatory guides are available for inspection at the NRC's Public Document Room (PDR) located at 11555 Rockville Pike, Rockville, Maryland. The PDR's mailing address is USNRC PDR, Washington, DC 20555–0001. The PDR can also be reached by

telephone at (301) 415–4737 or (800) 397–4209, by fax at (301) 415–3548, and by e-mail to *pdr.resource@nrc.gov*.

Regulatory guides are not copyrighted, and Commission approval is not required to reproduce them.

Dated at Rockville, Maryland, this 6th day of July 2009.

For the Nuclear Regulatory Commission.

Mark P. Orr,

Acting Chief, Regulatory Guide Development Branch, Division of Engineering, Office of Nuclear Regulatory Research.

[FR Doc. E9–16349 Filed 7–9–09; 8:45 am]

BILLING CODE 7590–01–P

NUCLEAR REGULATORY COMMISSION

National Bureau of Standards Reactor

[Docket No. 50–184; NRC–2009–0305]

Notice of Issuance of Renewed Facility License No. TR–5

The U.S. Nuclear Regulatory Commission (NRC) has issued renewed Facility Operating License No. TR–5, held by the National Institute of Standards and Technology (the licensee), which authorizes continued operation of the National Bureau of Standards Reactor (NBSR), located in Gaithersburg, Montgomery County, Maryland. The NBSR is a tank-type, heavy-water-moderated-and-cooled test reactor licensed to operate at a steady-state power level of 20 megawatts thermal power. Renewed Facility Operating License No. TR–5 will expire at midnight 20 years from its date of issuance.

The renewed license complies with the standards and requirements of the Atomic Energy Act of 1954, as amended (the Act), and the Commission's rules and regulations. The Commission has made appropriate findings as required by the Act and the Commission's regulations in Title 10, Chapter 1, ''Nuclear Regulatory Commission,'' of the *Code of Federal Regulations* (10 CFR), and sets forth those findings in the renewed license. The agency afforded an opportunity for hearing in the Notice of Opportunity for Hearing published in the **Federal Register** on September 21, 2004 (69 FR 56462). The NRC received no request for a hearing or petition for leave to intervene following the notice.

The NRC staff prepared a safety evaluation report for the renewal of Facility License No. TR–5 and concluded, based on that evaluation, that the licensee can continue to operate the facility without endangering the health and safety of the public. The NRC staff also prepared a final Environmental Impact Statement for license renewal, noticed in the **Federal Register** on December 13, 2007 (72 FR 70900), and concluded that renewal of the license will not have a significant impact on the quality of the human environment.

For details with respect to the application for renewal, see the licensee's letter dated April 9, 2004 (ADAMS Accession Nos. ML041120167, ML041120179, ML041120201, ML041120205, ML041120206, ML041120207, ML041120210, ML041120216, ML041120217, ML041120221, ML041120225, ML041120229, ML041120233, ML041120234, ML041120235, ML041120237, ML041120239, ML041120241, ML041120244, ML041120247, ML041120250), as supplemented on October 2, 2006 (ADAMS Accession No. ML062850511), May 30 (ADAMS Accession No. ML071570459) and August 14, 2007 (ADAMS Accession No. ML072390261), September 16 (ADAMS Accession No. ML082890338), October 21 (ADAMS Accession No. ML083030209), and December 8, 2008 (ADAMS Accession No. ML083510754), and March 3 (ADAMS Accession No. ML090700132), March 19 (ADAMS Accession No. ML090890327), and April 22, 2009 (ADAMS Accession Nos. ML091190451 and ML091190464). Documents may be examined, and/or copied for a fee, at the NRC's Public Document Room (PDR), located at One White Flint North, 11555 Rockville Pike (first floor), Rockville, Maryland. Publicly available records will be accessible electronically from the Agencywide Documents Access and Management System (ADAMS) Public Electronic Reading Room on the NRC Web site, *http://www.nrc.gov/reading-rm/adams.html*. Persons who do not have access to ADAMS or who encounter problems in accessing the documents located in ADAMS should contact the NRC PDR Reference staff at 1–800–397–4209 or 301–415–4737, or send an e-mail to *pdr@nrc.gov*.

Dated at Rockville, Maryland, this 2nd day of July 2009.

For the Nuclear Regulatory Commission.

Kathryn M. Brock,

Chief, Research and Test Reactors Branch A, Division of Policy and Rulemaking, Office of Nuclear Reactor Regulation.

[FR Doc. E9–16350 Filed 7–9–09; 8:45 am]

BILLING CODE 7590–01–P

SECURITIES AND EXCHANGE COMMISSION

[Release No. 34–60216; File No. SR–NYSE–2009–59]

Self-Regulatory Organizations; Notice of Filing and Immediate Effectiveness of Proposed Rule Change by New York Stock Exchange LLC Amending Exchange Rules To Allow Customers To Transmit Orders on the Exchange With Settlement Instructions of ''Cash,'' ''Next Day,'' and ''Seller's Option'' Directly to a Floor Broker for Manual Execution

July 1, 2009.

Pursuant to Section 19(b)(1) [1] of the Securities Exchange Act of 1934 (the ''Act'') [2] and Rule 19b–4 thereunder,[3] notice is hereby given that, on June 23, 2009, New York Stock Exchange LLC (''NYSE'' or the ''Exchange'') filed with the Securities and Exchange Commission (the ''Commission'') the proposed rule change as described in Items I and II below, which Items have been prepared by the self-regulatory organization. The Commission is publishing this notice to solicit comments on the proposed rule change from interested persons.

I. Self-Regulatory Organization's Statement of the Terms of Substance of the Proposed Rule Change

The Exchange proposes to amend several Exchange rules to allow customers to transmit orders with settlement instructions for other than regular way settlement, *i.e.,* settling on the third business day following the trade date. Such orders must be transmitted to a Floor broker for manual handling on the Exchange. The text of the proposed rule change is available at the Exchange, the Commission's Public Reference Room, and *http://www.nyse.com*.

II. Self-Regulatory Organization's Statement of the Purpose of, and Statutory Basis for, the Proposed Rule Change

In its filing with the Commission, the self-regulatory organization included statements concerning the purpose of, and basis for, the proposed rule change and discussed any comments it received on the proposed rule change. The text of those statements may be examined at the places specified in Item IV below. The Exchange has prepared summaries, set forth in sections A, B, and C below,

[1] 15 U.S.C.78s(b)(1).

[2] 15 U.S.C. 78a.

[3] 17 CFR 240.19b–4.

of the most significant parts of such statements.

A. Self-Regulatory Organization's Statement of the Purpose of, and Statutory Basis for, the Proposed Rule Change

1. Purpose

The Exchange proposes to allow customers to transmit orders for execution on the Exchange with the settlement instructions of ''cash'', ''next day'' and ''seller's option'' (collectively referred to herein as ''non-regular way settlement'') directly to a Floor broker for manual execution. Specifically, the Exchange seeks to adopt Rule 14 (Non-Regular Way Settlement Instructions for Orders) to provide that orders with these types of settlement instructions may only be submitted directly to a Floor broker. In addition, the Exchange proposes to add references to Rule 14 to several Exchange rules which relate in some way to these settlement instructions.

The Exchange notes that parallel changes are proposed to be made to the rules of the NYSE Amex LLC (formerly the American Stock Exchange).[4]

Background

On March 13, 2009, the Exchange's amended rule became operative to require that all orders submitted to Exchange be submitted for regular way settlement (*i.e.,* settlement on the third business day following trade date).[5] Prior to that requirement, the Exchange allowed market participants to submit orders that contained non-regular way settlement instructions directly to the Exchange matching/execution engine (Display Book), or to a Floor broker for representation. Cash settlement instructions required delivery of the securities the same day as the transaction. Next day settlement instructions required delivery of the securities on the first business day following the transaction. Orders that had settlement instructions of seller's option afforded the seller the right to deliver the security or bond at any time within a specified period, ranging from not less than two business days to not more than 180 days for stocks and not less than two business days and no more than 60 days for U.S. government securities.

If an order containing non-regular way settlement instructions was sent to a Floor broker for representation, then the Floor broker was responsible for going to the post where the security traded to effect the execution of that order. However, Display Book electronically submitted orders that contained non-regular way settlement instructions were ineligible for immediate and automatic execution. Rather, the orders bypassed the Display Book, and were printed on paper at the Designated Market Makers' (''DMMs'') post locations, along with other administrative messages. Thereafter, the orders containing non-regular way settlement instructions required the DMM and the trading assistant to realize that the document printed was in fact an order which in some instances caused delay in the execution of the order. The DMM was then responsible for the manual execution of the order. The manual intervention required by the DMM and trading assistant at the post location in the processing of orders containing non-regular way settlement instructions put the orders at the very real risk of ''missing the market'' as a result of the current speed of order execution in the Exchange market.

In addition to the risk of ''missing the market'', orders containing non-regular way settlement instructions were generally infrequently used by market participants for much of the trading calendar.[6] The Exchange therefore provided that only orders for regular way execution be submitted to the Exchange.

Exchange customers, however, have expressed that certain trading strategies and/or the expiration of certain trading instrument (*e.g.* rights and warrants) require the ability to submit orders to the Exchange that contain instructions for execution with non-regular way settlement. To accommodate the needs of its customers, the Exchange proposes to allow orders containing non-regular way settlement instructions to be transmitted directly to a Floor broker for manual order handling.

Proposed Floor Broker Handling of Cash, Next Day, Seller's Option Settlement Instructions

The Exchange's commitment to provide its market participants with immediate and automatic execution in the most efficient manner requires the establishment of a separate order handling protocol for orders that contain non-regular way settlement instructions. Prior to the rule changes proposed in SR–NYSE–2009–17, the required manual intervention by the DMMs and DMM trading assistants did not provide for efficient order handling protocol because it put the orders at the very real risk of ''missing the market'' as a result of the current speed of order execution in the Exchange market. However, the Exchange recognizes that that there may be a continuing need for the availability of orders with non-regular way settlement instructions in its marketplace. To that end, the Exchange has designed a method of entry for these orders that will involve minimal manual handling by DMMs.

The Exchange therefore proposes to adopt NYSE Rule 14 (''Non-Regular Way Settlement Instructions for Orders'') to allow customers to directly transmit an order containing instructions for cash, next day and seller's option settlement as described above to a Floor broker for representation in the trading crowd.[7] DMMs will not have order handling responsibility for these orders and Exchange systems that route orders to the Display Book will not accept orders containing non-regular way instructions. Routing orders to Floor brokers would then be the only acceptable way for orders with non-regular way settlement instructions to be transmitted to the Exchange.[8]

[4] *See* SR–NYSE Amex–2009–31.

[5] *See* Securities and Exchange Act Release No. 59446 (February 25, 2009), 74 FR 9323 (March 3, 2009) (SR–NYSE–2009–17). The Exchange notes that the implementation of the changes described in this filing continue to be made on a security by security basis and, to date, are not operative in every security traded on the Exchange.

[6] The Exchanges review of the different types of orders received during the week of May 12, 2008 through May 16, 2008 showed that there were on average 28 cash orders (with an average of 1,653 shares per day), 48 next day orders (average of 763 shares per day) and 2 seller's option orders (average of 2,839 shares per day) utilized by market participants each day. By comparison, for May 2008, the Exchange received an average of 92.2 million orders a day. Even during the last five trading days of 2007, when the most cash, next day and seller's option orders are received, the average per day submissions were 123 for cash (average of 896 shares per day), 199 for next day (average of 1,848 shares per day) and 10 for seller's option (average of 11,679 shares per day). The Exchange did however, execute an atypical amount of shares submitted with cash, next day and seller's option settlement instructions on December 30th and 31st of 2008. Specifically, on December 30, 2008, 126,504 shares were executed on a cash settlement basis, 10,284,879 shares for next day settlement and 10,000,000 shares for seller's option settlement. In addition, there were 8,110,228 shares executed for cash settlement on December 31, 2008. The Exchange maintains that this level of activity was reflective of the economic events of 2008 and is unrelated to usual trading patterns for these settlement types.

[7] The Exchange notes that as currently configured, the only Exchange system that will accept orders with non-regular way instructions is the Broker Booth Support System (''BBSS''). Thus, these types of orders cannot be transmitted directly to a Floor broker's hand-held device. In addition, odd-lot orders with non-regular way settlement instructions will not be accepted in BBSS and, therefore, will not be permitted.

[8] On June 10, 2009, the Exchange implemented this proposal after submitting a draft of this filing to the Commission, but prior to formal submission and receipt of a waiver of the 30-day delayed operative date.

Proposed Rule 14 will define the acceptable non-regular way settlement instructions valid on the Exchange. An order submitted with cash settlement instructions would require delivery of the securities on the same day as the trade date. Next day settlement instructions would require delivery of the securities on the first business day following the trade date. Orders that have settlement instructions of seller's option would afford the seller the right to deliver the security or bond at any time within a specified period, ranging from not less than two business days to not more than 60 days for securities and not less than two business days and no more than 60 days for U.S. government securities. The Exchange modified from the previously effective version of this rule the maximum days for a seller's option from 180 days to 60 days to reflect current industry practice for securities other than U.S. government securities.

Further, pursuant to proposed NYSE Rule 14, a customer that requests the execution of an order pursuant to non-regular way settlement instructions of cash, next day or seller's option must send the order directly to a Floor broker booth location on the Floor of the NYSE. A Floor broker that receives an order containing settlement instructions for cash, next day or seller's option must enter the order into broker systems prior to representing the order in the trading crowd to comply with his or her FESC obligations.[9] Thereafter, the Floor broker would be allowed to represent the order in the trading crowd.[10] Executions by the Floor broker of order containing non-regular way settlement would be reported to the Consolidated Tape with cash, next day or seller's option transaction indicators as appropriate.

In addition, the Exchange proposes to amend NYSE Rules 64 (Bonds, Rights and 100-Share-Unit Stocks), 66 (U.S. Government Securities),[11] 130 (Overnight Comparison of Exchange Transactions), to allow for non-regular way settlement as prescribed by proposed Rule 14. The Exchange further proposes to amend Rules 137 (Written Contracts) and 137A (Samples of Written Contracts) to include seller's options in written contracts. In addition, the Exchange further proposes to reinstate reserved Rules 73, 177 and 179 to re-establish ''Seller's Option'', ''Delivery Time—'Cash' Contracts'' and ''Seller's Option'' in order to specify precedence and delivery times for transactions made pursuant to cash and seller's option settlement instructions. The Exchange further proposes to amend NYSE Rule 189 (Unit of Delivery) to specify that the buyer shall not be required to accept a portion of a lot of securities contracted for before the seller's option expiration date. NYSE Rules 235 (Ex-Dividends, Ex-Rights), 236 (Ex-Warrants), 257 (Deliveries After ''Ex'' Date) and 282 (Buy-In Procedures) to add specific provisions related to orders submitted with cash settlement instructions. NYSE Rules 241 (Interest—Added to Contract Price) to add specific provisions related to orders submitted with seller's option settlement instructions.

With respect to Rule 64, the Exchange proposes to add provisions that were previously a part of the Rule before the Exchange eliminated non-regular way settlement instructions under SR–NYSE–2009–17. Specifically, the Exchange proposes to:

(1) Add paragraph (a)(ii) to require that on the second and third business days preceding the final day for subscription, bids and offers in rights may only be made for next day settlement, and may only be made for cash settlement on the day preceding the final day for subscription;

(2) Add paragraph (b) to require that all trades for other than regular way settlement that are more than .10 point away from the regular way bid or offer must be approved by a Floor Official, except that this will be expanded to .25 during the last trading week of the calendar year; and

(3) Add paragraph (c) to require that while for seller's option trades the settlement date is established in business days, they must be reported to the tape in calendar days.

The Exchange believes these provisions are necessary to continue to regulate non-regular way trades, as they were before they were eliminated.

The Exchange also proposes to add references to proposed NYSE Rule 14 and non-regular way settlement instructions to those rules that have provisions that implicate settlement instructions. Specifically, the Exchange proposes to add the reference to NYSE Rules 12 (''Business Day'') and 123 (Record of Orders).

Odd Lot Orders

Proposed NYSE Rule 14 will only permit non-regular way settlement instructions for round lot orders and orders that are comprised of a round lot and an odd lot, i.e., partial round lot orders (''PRLs''). Odd lot orders with non-regular way settlement instructions will not be acceptable for execution on the Exchange. Exchange systems, order execution and post settlement processing will not support non-regular way settlement for odd lots. PRL orders submitted with non-regular way settlement instructions will be executed pursuant to the provisions of proposed Rule 124.40 (ii). Proposed Rule 124.40 (ii) will require that the odd-lot portion of the PRL will be executed at the same price of the last round lot in the order to better facilitate the post settlement processing of these orders.

The Exchange believes that the instant proposal will meet the needs of its customers to submit orders for non-regular way settlement in a manner that will provide effective representation for the customer in the Exchange's current market.

2. Statutory Basis

The basis under the Securities Exchange Act of 1934 (the ''Act'') for this proposed rule change is the requirement under Section 6(b)(5)[12] that an exchange have rules that are designed to promote just and equitable principles of trade, to remove impediments to and perfect the mechanism of a free and open market and a national market system and, in general, to protect investors and the public interest. The instant filing accomplishes these goals by restoring the ability of Exchange market participants to enter orders with other than ''regular way'' settlement instructions, and allow these orders to be represented at the point of sale in the Exchange's auction market while reducing the risk of such orders missing the market.

B. Self-Regulatory Organization's Statement on Burden on Competition

The Exchange does not believe that the proposed rule change will impose any burden on competition that is not necessary or appropriate in furtherance of the purposes of the Act.

C. Self-Regulatory Organization's Statement on Comments on the Proposed Rule Change Received From Members, Participants, or Others

No written comments were solicited or received with respect to the proposed rule change.

[9] FESC stands for ''Front End Systemic Capture''. Under NYSE Rule 123 (Records of Orders) members and member organizations are required to enter the details of an order, including any modification or cancellation, into a system which electronically timestamps the time of entry prior to representing or executing that order on the Floor.

[10] The Exchange notes that Floor brokers who accept customer orders with non-regular way settlement instructions will have the same best execution responsibilities in representing these orders as they would for regular way orders.

[11] Currently, the Exchange does not trade U.S. Government securities.

[12] 15 U.S.C. 78f(b)(5).

III. Date of Effectiveness of the Proposed Rule Change and Timing for Commission Action

The proposed rule change has become effective pursuant to Section 19(b)(3)(A) of the Act [13] and Rule 19b–4(f)(6) thereunder [14] because the foregoing proposed rule: (1) Does not significantly affect the protection of investors or the public interest; (2) does not impose any significant burden on competition; and (3) does not become operative for 30 days after the date of filing, or such shorter time as the Commission may designate if consistent with the protection of investors and the public interest.[15]

A proposed rule change filed pursuant to Rule 19b–4(f)(6) under the Act [16] normally does not become operative for 30 days after the date of its filing. However, Rule 19b–4(f)(6)(iii) [17] permits the Commission to designate a shorter time if such action is consistent with the protection of investors and the public interest. The NYSE has requested that the Commission waive the 30-day operative delay. The Commission believes that waiving the 30-day operative delay is consistent with the protection of investors and the public interest, because the proposed rule change restores the ability of market participants to submit, and Floor brokers to receive, orders containing non-regular way settlement instructions. Accordingly, the proposed rule change does not raise any novel or troubling issues. For this reason, the Commission designates the proposed rule change as operative upon filing.[18]

At any time within 60 days of the filing of the proposed rule change, the Commission may summarily abrogate such rule change if it appears to the Commission that such action is necessary or appropriate in the public interest, for the protection of investors, or otherwise in furtherance of the purposes of the Act.

IV. Solicitation of Comments

Interested persons are invited to submit written data, views, and arguments concerning the foregoing, including whether the proposed rule change is consistent with the Act. Comments may be submitted by any of the following methods:

Electronic Comments

- Use the Commission's Internet comment form (*http://www.sec.gov/rules/sro.shtml*); or
- Send an e-mail to *rule-comments@sec.gov.* Please include File Number SR–NYSE–2009–59 on the subject line.

Paper Comments

- Send paper comments in triplicate to Elizabeth M. Murphy, Secretary, Securities and Exchange Commission, 100 F Street, NE., Washington, DC 20549–1090.

All submissions should refer to File Number SR–NYSE–2009–59. This file number should be included on the subject line if e-mail is used. To help the Commission process and review your comments more efficiently, please use only one method. The Commission will post all comments on the Commission's Internet Web site (*http://www.sec.gov/rules/sro.shtml*). Copies of the submission, all subsequent amendments, all written statements with respect to the proposed rule change that are filed with the Commission, and all written communications relating to the proposed rule change between the Commission and any person, other than those that may be withheld from the public in accordance with the provisions of 5 U.S.C. 552, will be available for inspection and copying in the Commission's Public Reference Room, 100 F Street, NE., Washington, DC 20549, on official business days between the hours of 10 a.m. and 3 p.m. Copies of the filing will also be available for inspection and copying at the principal office of the self-regulatory organization. All comments received will be posted without change; the Commission does not edit personal identifying information from submissions. You should submit only information that you wish to make available publicly. All submissions should refer to File Number SR–NYSE–2009–59 and should be submitted on or before July 31, 2009.

For the Commission, by the Division of Trading and Markets, pursuant to delegated authority.[19]

Elizabeth M. Murphy,

Secretary.

[FR Doc. E9–16313 Filed 7–9–09; 8:45 am]

BILLING CODE 8010–01–P

[13] 15 U.S.C. 78s(b)(3)(A).

[14] 17 CFR 240.19b–4(f)(6).

[15] In addition, Rule 19b–4(f)(6)(iii) requires the self-regulatory organization to give the Commission notice of its intent to file the proposed rule change, along with a brief description and text of the proposed rule change, at least five business days prior to the date of filing of the proposed rule change, or such shorter time as designated by the Commission. NYSE has satisfied this requirement.

[16] 17 CFR 240.19b–4(f)(6).

[17] 17 CFR 240.19b–4(f)(6)(iii).

[18] For purposes only of waiving the 30-day operative delay, the Commission has considered the proposed rule's impact on efficiency, competition, and capital formation. 15 U.S.C. 78c(f).

[19] 17 CFR 200.30–3(a)(12).

SECURITIES AND EXCHANGE COMMISSION

[Release No. 34–60217; File No. SR–NYSEAMEX–2009–31]

Self-Regulatory Organizations; Notice of Filing and Immediate Effectiveness of Proposed Rule Change by NYSE Amex LLC Amending NYSE Amex Equities Rules To Allow Customers To Transmit Orders on the Exchange With Settlement Instructions of ''Cash,'' ''Next Day'' and ''Seller's Option'' Directly to a Floor Broker for Manual Execution

July 1, 2009.

Pursuant to Section 19(b)(1) [1] of the Securities Exchange Act of 1934 (the ''Act'') [2] and Rule 19b–4 thereunder,[3] notice is hereby given that, on June 23, 2009, NYSE Amex LLC (the ''Exchange'' or ''NYSE Amex'') filed with the Securities and Exchange Commission (the ''Commission'') the proposed rule change as described in Items I and II below, which Items have been prepared by the self-regulatory organization. The Commission is publishing this notice to solicit comments on the proposed rule change from interested persons.

I. Self-Regulatory Organization's Statement of the Terms of Substance of the Proposed Rule Change

The Exchange proposes to amend several NYSE Amex Equities rules to allow customers to transmit orders for execution on the Exchange with the settlement instructions of ''cash'', ''next day'' and ''seller's option'' directly to a Floor broker for manual execution. The text of the proposed rule change is available at the Exchange, the Commission's Public Reference Room, and *http://www.nyse.com.*

II. Self-Regulatory Organization's Statement of the Purpose of, and Statutory Basis for, the Proposed Rule Change

In its filing with the Commission, the self-regulatory organization included statements concerning the purpose of, and basis for, the proposed rule change

[1] 15 U.S.C. 78s(b)(1).

[2] 15 U.S.C. 78a.

[3] 17 CFR 240.19b–4.

and discussed any comments it received on the proposed rule change. The text of those statements may be examined at the places specified in Item IV below. The Exchange has prepared summaries, set forth in sections A, B, and C below, of the most significant parts of such statements.

A. Self-Regulatory Organization's Statement of the Purpose of, and Statutory Basis for, the Proposed Rule Change

1. Purpose

The Exchange proposes to allow customers to transmit orders for execution on the Exchange with the settlement instructions of ''cash'', ''next day'' and ''seller's option'' (collectively referred to herein as ''non-regular way settlement'') directly to a Floor broker for manual execution. Specifically, the Exchange seeks to adopt NYSE Amex Rule 14 (*Non-Regular Way Settlement Instructions for Orders*) to provide that orders with these types of settlement instructions may only be submitted directly to a Floor broker. In addition, the Exchange proposes to add references to NYSE Amex Rule 14 to several Exchange rules which relate in some way to these settlement instructions.

The Exchange notes that parallel changes are proposed to be made to the rules of the New York Stock Exchange (''NYSE'').[4]

Background

As described more fully in a related rule filing,[5] NYSE Euronext acquired the Amex Membership Corporation (''AMC'') pursuant to an Agreement and Plan of Merger, dated January 17, 2008 (the ''Merger''). In connection with the Merger, the Exchange's predecessor, the American Stock Exchange LLC (''Amex''), a subsidiary of AMC, became a subsidiary of NYSE Euronext called NYSE Alternext US LLC,[6] and continues to operate as a national securities exchange registered under Section 6 of the Securities Exchange Act of 1934 [sic], as amended (the ''Act'').[7] The effective date of the Merger was October 1, 2008.

In connection with the Merger, on December 1, 2008, the Exchange relocated all equities trading conducted on the Exchange legacy trading systems and facilities located at 86 Trinity Place, New York, New York, to trading systems and facilities located at 11 Wall Street, New York, New York (the ''Equities Relocation''). The Exchange's equity trading systems and facilities at 11 Wall Street (the ''NYSE Amex Trading Systems'') are operated by the NYSE on behalf of the Exchange.[8]

As part of the Equities Relocation, NYSE Alternext adopted NYSE Rules 1–1004, subject to such changes as necessary to apply the Rules to the Exchange, as the NYSE Alternext Equities Rules to govern trading on the NYSE Alternext Trading Systems.[9] The NYSE Alternext Equities Rules, which became operative on December 1, 2008, are substantially identical to the current NYSE Rules 1–1004 and the Exchange continues to update the NYSE Alternext Equities Rules, now renamed the NYSE Amex Equities Rules, as necessary to conform with rule changes to corresponding NYSE Rules filed by the NYSE.

On March 13, 2009, the Exchange's amended rule became operative to require that all orders submitted to the Exchange be submitted for regular way settlement (*i.e.*, settlement on the third business day following trade date).[10] Prior to that requirement, the Exchange allowed market participants to submit orders that contained non-regular way settlement instructions directly to the Exchange matching/execution engine (Display Book), or to a Floor broker for representation. Cash settlement instructions required delivery of the securities the same day as the transaction. Next day settlement instructions required delivery of the securities on the first business day following the transaction. Orders that had settlement instructions of seller's option afforded the seller the right to deliver the security or bond at any time within a specified period, ranging from not less than two business days to not more than 180 days for stocks and not less than two business days and no more than sixty days for U.S. government securities.

If an order containing non-regular way settlement instructions was sent to a Floor broker for representation, then the Floor broker was responsible for going to the post where the security traded to effect the execution of that order. However, Display Book electronically submitted orders that contained non-regular way settlement instructions were ineligible for immediate and automatic execution. Rather, the orders bypassed the Display Book, and were printed on paper at the Designated Market Makers' (''DMMs'') post locations, along with other administrative messages. Thereafter, the orders containing non-regular way settlement instructions required the DMM and the trading assistant to realize that the document printed was in fact an order which in some instances caused delay in the execution of the order. The DMM was then responsible for the manual execution of the order. The manual intervention required by the DMM and trading assistant at the post location in the processing of orders containing non-regular way settlement instructions put the orders at the very real risk of ''missing the market'' as a result of the current speed of order execution in the Exchange market.

In addition to the risk of ''missing the market'', orders containing non-regular way settlement instructions were generally infrequently used by market participants for much of the trading calendar. The Exchange therefore provided that only orders for regular way execution be submitted to the Exchange.

Exchange customers, however, have expressed that certain trading strategies and/or the expiration of certain trading instrument (*e.g.* rights and warrants) require the ability to submit orders to the Exchange that contain instructions for execution with non-regular way settlement. To accommodate the needs of its customers, the Exchange proposes to allow orders containing non-regular way settlement instructions to be transmitted directly to a Floor broker for manual order handling.

[4] *See* SR–NYSE–2009–59.

[5] *See* Securities Exchange Act Release No. 58673 (September 29, 2008), 73 FR 57707 (October 3, 2008) (SR–NYSE–2008–60 and SR–Amex–2008–62) (approving the Merger).

[6] NYSE Alternext US LLC was subsequently renamed NYSE Amex LLC. *See* Securities Exchange Act Release No. 59575 (March 13, 2009), 74 FR 11803 (March 19, 2009) (SR–NYSEALTR–2009–24).

[7] 15 U.S.C. 78f.

[8] *See* Securities Exchange Act Release No. 58705 (October 1, 2008), 73 FR 58995 (October 8, 2008) (SR–Amex 2008–63) (approving the Equities Relocation).

[9] *See* Securities Exchange Act Release No. 58705 (October 1, 2008), 73 FR 58995 (October 8, 2008) (SR–Amex 2008–63) (approving the Equities Relocation); Securities Exchange Act Release No. 58833 (October 22, 2008), 73 FR 64642 (October 30, 2008) (SR–NYSE–2008–106) *and* Securities Exchange Act Release No. 58839 (October 23, 2008), 73 FR 64645 (October 30, 2008) (SR–NYSEALTR–2008–03) (together, approving the Bonds Relocation); Securities Exchange Act Release No. 59022 (November 26, 2008), 73 FR 73683 (December 3, 2008) (SR–NYSEALTR–2008–10) (adopting amendments to NYSE Alternext Equities Rules to track changes to corresponding NYSE Rules); Securities Exchange Act Release No. 59027 (November 28, 2008), 73 FR 73681 (December 3, 2008) (SR–NYSEALTR–2008–11) (adopting amendments to Rule 62—NYSE Alternext Equities to track changes to corresponding NYSE Rule 62).

[10] *See* Securities and Exchange Act Release No. 59561 (March 11, 2009), 74 FR 11393 (March 17, 2009) (SR–NYSEALTR–2009–25). The Exchange notes that the implementation of the changes described in this filing continue to be made on a security by security basis and, to date, are not operative in every security traded on the Exchange.

Proposed Floor Broker Handling of Cash, Next Day, Seller's Option Settlement Instructions

The Exchange's commitment to provide its market participants with immediate and automatic execution in the most efficient manner requires the establishment of a separate order handling protocol for orders that contain non-regular way settlement instructions. Prior to the rule changes proposed in SR–NYSEALTR–2009–25, the required manual intervention by the DMMs and DMM trading assistants did not provide for efficient order handling protocol because it put the orders at the very real risk of ''missing the market'' as a result of the current speed of order execution in the Exchange market. However, the Exchange recognizes that that there may be a continuing need for the availability of orders with non-regular way settlement instructions in its marketplace. To that end, the Exchange has designed a method of entry for these orders that will involve minimal manual handling by DMMs.

The Exchange therefore proposes to adopt NYSE Amex Equities Rule 14 (''Non-Regular Way Settlement Instructions for Orders'') to allow customers to directly transmit an order containing instructions for cash, next day and seller's option settlement as described above to a Floor broker for representation in the trading crowd.[11] DMMs will not have order handling responsibility for these orders and Exchange systems that route orders to the Display Book will not accept orders containing non-regular way instructions. Routing orders to Floor brokers would then be the only acceptable way for orders with non-regular way settlement instructions to be transmitted to the Exchange.[12]

Proposed NYSE Amex Equities Rule 14 will define the acceptable non-regular way settlement instructions valid on the Exchange. An order submitted with cash settlement instructions would require delivery of the securities on the same day as the trade date. Next day settlement instructions would require delivery of the securities on the first business day following the trade date. Orders that have settlement instructions of seller's option would afford the seller the right to deliver the security or bond at any time within a specified period, ranging from not less than two business days to not more than sixty days for securities and not less than two business days and no more than sixty days for U.S. government securities. The Exchange modified from the previously effective version of this rule the maximum days from 180 to sixty days to reflect current industry practice for securities other than U.S. government securities.

Further, pursuant to proposed NYSE Amex Equities Rule 14, a customer that requests the execution of an order pursuant to non-regular way settlement instructions of cash, next day or seller's option must send the order directly to a Floor broker booth location on the Floor of the Exchange. A Floor broker that receives an order containing settlement instructions for cash, next day or seller's option must enter the order into broker systems prior to representing the order in the trading crowd to comply with his or her FESC obligations.[13] Thereafter, the Floor broker would be allowed to represent the order in the trading crowd.[14] Executions by the Floor broker of order containing non-regular way settlement would be reported to the Consolidated Tape with cash, next day or seller's option transaction indicators as appropriate.

In addition, the Exchange proposes to amend NYSE Amex Equities Rules 64 (Bonds, Rights and 100-Share-Unit Stocks), 66 (U.S. Government Securities),[15] 130 (Overnight Comparison of Exchange Transactions), to allow for non-regular way settlement as prescribed by proposed Rule 14. The Exchange further proposes to amend NYSE Amex Equities Rules 137 (Written Contracts) and 137A (Samples of Written Contracts) to include seller's options in written contracts. In addition, the Exchange further proposes to reinstate reserved NYSE Amex Equities Rules 73, 177 and 179 to re-establish, ''Seller's Option'', ''Delivery Time—'Cash' Contracts'' and ''Seller's Option'' in order to specify precedence and delivery times for transactions made pursuant to cash and seller's option settlement instructions. The Exchange further proposes to amend NYSE Amex Equities Rule 189 (Unit of Delivery) to specify that the buyer shall not be required to accept a portion of a lot of securities contracted for before the seller's option expiration date. NYSE Amex Equities Rules 235 (Ex-Dividends, Ex-Rights), 236 (Ex-Warrants), 257 (Deliveries After ''Ex'' Date) and 282 (Buy-In Procedures) to add specific provisions related to orders submitted with cash settlement instructions. NYSE Amex Equities Rules 241 (Added to Contract Price) to add specific provisions related to orders submitted with seller's option settlement instructions.

With respect to NYSE Amex Equities Rule 64, the Exchange proposes to add provisions that were previously a part of the Rule before the Exchange eliminated non-regular way settlement instructions under SR–NYSEALTR–2009–25. Specifically, the Exchange proposes to:

(1) Add paragraph (a)(ii) to require that on the second and third business days preceding the final day for subscription, bids and offers in rights may only be made for next day settlement, and may only be made for cash settlement on the day preceding the final day for subscription;

(2) Add paragraph (b) to require that all trades for other than regular way settlement that are more than .10 point away from the regular way bid or offer must be approved by a Floor Official, except that this will be expanded to .25 during the last trading week of the calendar year; and

(3) Add paragraph (c) to require that while for seller's option trades the settlement date is established in business days, they must be reported to the tape in calendar days.

The Exchange believes these provisions are necessary to continue to regulate non-regular way trades, as they were before they were eliminated.

The Exchange also proposes to add references to proposed NYSE Amex Equities Rule 14 and non-regular way settlement instructions to those rules that have provisions that implicate settlement instructions. Specifically, the Exchange proposes to add the reference to NYSE Amex Equities Rules 12 (''Business Day'') and 123 (Record of Orders).

Odd Lot Orders

Proposed NYSE Amex Equities Rule 14 will only permit non-regular way settlement instructions for round lot orders and orders that are comprised of a round lot and an odd lot, *i.e.,* partial round lot orders (''PRLs''). Odd lot orders with non-regular way settlement

[11] The Exchange notes that as currently configured, the only Exchange system that will accept orders with non-regular way instructions is the Broker Booth Support System. Thus, these types of orders cannot be transmitted directly to a Floor broker's hand-held device. In addition, odd-lot orders with non-regular way settlement instructions will not be accepted in BBSS and, therefore, will not be permitted.

[12] On June 10, 2009 the Exchange implemented this proposal after submitting a draft of this filing to the Commission, but prior to formal submission and receipt of a waiver of the 30-day delayed operative date.

[13] FESC stands for ''Front End Systemic Capture''. Under NYSE Amex Equities Rule 123 (Records of Orders) members and member organizations are required to enter the details of an order, including any modification or cancellation, into a system which electronically timestamps the time of entry prior to representing or executing that order on the Floor.

[14] The Exchange notes that Floor brokers who accept customer orders with non-regular way settlement instructions will have the same best execution responsibilities in representing these orders as they would for regular way orders.

[15] Currently, the Exchange does not trade U.S. Government securities.

instructions will not be acceptable for execution on the Exchange. Exchange systems, order execution and post settlement processing will not support non-regular way settlement for odd lots. PRL orders submitted with non-regular way settlement instructions will be executed pursuant to the provisions of proposed NYSE Amex Equities Rule 124.40 (ii). Proposed NYSE Amex Equities Rule 124.40 (ii) will require that the odd-lot portion of the PRL will be executed at the same price of the last round lot in the order to better facilitate the post settlement processing of these orders.

The Exchange believes that the instant proposal will meet the needs of its customers to submit orders for non-regular way settlement in a manner that will provide effective representation for the customer in the Exchange's current market.

2. Statutory Basis

The basis under the Securities Exchange Act of 1934 (the ''Act'') for this proposed rule change is the requirement under Section 6(b)(5) [16] that an exchange have rules that are designed to promote just and equitable principles of trade, to remove impediments to and perfect the mechanism of a free and open market and a national market system and, in general, to protect investors and the public interest. The instant filing accomplishes these goals by restoring the ability of Exchange market participants to enter orders with other than ''regular way'' settlement instructions, and allow these orders to be represented at the point of sale in the Exchange's auction market while reducing the risk of such orders missing the market.

B. Self-Regulatory Organization's Statement on Burden on Competition

The Exchange does not believe that the proposed rule change will impose any burden on competition that is not necessary or appropriate in furtherance of the purposes of the Act.

C. Self-Regulatory Organization's Statement on Comments on the Proposed Rule Change Received From Members, Participants, or Others

No written comments were solicited or received with respect to the proposed rule change.

[16] 15 U.S.C. 78f(b)(5).

III. Date of Effectiveness of the Proposed Rule Change and Timing for Commission Action

The proposed rule change has become effective pursuant to Section 19(b)(3)(A) of the Act [17] and Rule 19b–4(f)(6) thereunder [18] because the foregoing proposed rule: (1) Does not significantly affect the protection of investors or the public interest; (2) does not impose any significant burden on competition; and (3) does not become operative for 30 days after the date of filing, or such shorter time as the Commission may designate if consistent with the protection of investors and the public interest.[19]

A proposed rule change filed pursuant to Rule 19b–4(f)(6) under the Act [20] normally does not become operative for 30 days after the date of its filing. However, Rule 19b–4(f)(6)(iii) [21] permits the Commission to designate a shorter time if such action is consistent with the protection of investors and the public interest. The NYSE Amex has requested that the Commission waive the 30-day operative delay. The Commission believes that waiving the 30-day operative delay is consistent with the protection of investors and the public interest, because the proposed rule change restores the ability of market participants to submit, and Floor brokers to receive, orders containing non-regular way settlement instructions. Accordingly, the proposed rule change does not raise any novel issues. For this reason, the Commission designates the proposed rule change as operative upon filing.[22]

At any time within 60 days of the filing of the proposed rule change, the Commission may summarily abrogate such rule change if it appears to the Commission that such action is necessary or appropriate in the public interest, for the protection of investors, or otherwise in furtherance of the purposes of the Act.

[17] 15 U.S.C. 78s(b)(3)(A).

[18] 17 CFR 240.19b–4(f)(6).

[19] In addition, Rule 19b–4(f)(6)(iii) requires the self-regulatory organization to give the Commission notice of its intent to file the proposed rule change, along with a brief description and text of the proposed rule change, at least five business days prior to the date of filing of the proposed rule change, or such shorter time as designated by the Commission. NYSE Amex has satisfied this requirement.

[20] 17 CFR 240.19b–4(f)(6).

[21] 17 CFR 240.19b–4(f)(6)(iii).

[22] For purposes only of waiving the 30-day operative delay, the Commission has considered the proposed rule's impact on efficiency, competition, and capital formation. 15 U.S.C. 78c(f).

IV. Solicitation of Comments

Interested persons are invited to submit written data, views, and arguments concerning the foregoing, including whether the proposed rule change is consistent with the Act. Comments may be submitted by any of the following methods:

Electronic Comments

- Use the Commission's Internet comment form (*http://www.sec.gov/rules/sro.shtml*); or
- Send an e-mail to *rule-comments@sec.gov.* Please include File Number SR–NYSEAmex–2009–31 on the subject line.

Paper Comments

- Send paper comments in triplicate to Elizabeth M. Murphy, Secretary, Securities and Exchange Commission, 100 F Street, NE., Washington, DC 20549–1090.

All submissions should refer to File Number SR–NYSEAmex–2009–31. This file number should be included on the subject line if e-mail is used. To help the Commission process and review your comments more efficiently, please use only one method. The Commission will post all comments on the Commission's Internet Web site (*http://www.sec.gov/rules/sro.shtml*). Copies of the submission, all subsequent amendments, all written statements with respect to the proposed rule change that are filed with the Commission, and all written communications relating to the proposed rule change between the Commission and any person, other than those that may be withheld from the public in accordance with the provisions of 5 U.S.C. 552, will be available for inspection and copying in the Commission's Public Reference Room, 100 F Street, NE., Washington, DC 20549, on official business days between the hours of 10 a.m. and 3 p.m. Copies of the filing will also be available for inspection and copying at the principal office of the self-regulatory organization. All comments received will be posted without change; the Commission does not edit personal identifying information from submissions. You should submit only information that you wish to make available publicly. All submissions should refer to File Number SR–NYSEAmex–2009–31 and should be submitted on or before July 31, 2009.

[23] 17 CFR 200.30–3(a)(12).

For the Commission, by the Division of Trading and Markets, pursuant to delegated authority.[23]

Elizabeth M. Murphy,

Secretary.

[FR Doc. E9–16314 Filed 7–9–09; 8:45 am]

BILLING CODE 8010–01–P

SECURITIES AND EXCHANGE COMMISSION

[Release No. 34–60220; File No. SR–NASDAQ–2009–064]

Self-Regulatory Organizations; The NASDAQ Stock Market LLC; Notice of Filing and Immediate Effectiveness of a Proposed Rule Change Relating to NASDAQ Options Market Options Participant Membership Requirements, Order Entry Times and Confirmation Statements

July 1, 2009.

Pursuant to Section 19(b)(1) of the Securities Exchange Act of 1934 (''Act''),[1] and Rule 19b–4 thereunder,[2] notice is hereby given that on June 26, 2009, The NASDAQ Stock Market LLC (''NASDAQ'') filed with the Securities and Exchange Commission (''Commission'') the proposed rule change as described in Items I, II, and III below, which Items have been prepared by NASDAQ. NASDAQ has designated the proposed rule change as constituting a non-controversial rule change under Rule 19b–4(f)(6) under the Act,[3] which renders the proposal effective upon filing with the Commission. The Commission is publishing this notice to solicit comments on the proposed rule change from interested persons.

I. Self-Regulatory Organization's Statement of the Terms of the Substance of the Proposed Rule Change

NASDAQ proposes to make three noncontroversial amendments to the NASDAQ Options Market (''NOM'' or ''Exchange'') rule. First, Chapter II, Section 2 would be amended to modify a requirement that NOM Options Participants at all times maintain membership in another options exchange. Second, Chapter VI, Sections 1, 2, 7 and 9 would be amended to change the time of day at which NOM begins accepting orders. Third, Chapter XI, Section 11, would be amended to make clear that the rule does not require confirmation statements to contain the name of the option exchange or exchanges on which an option contract is executed.

The text of the proposed rule change is below. Proposed new language is underlined and proposed deletions are in brackets.

* * * * *

Chapter II, Participation

* * * * *

Section 2, Requirements for Options Participation

(a)–(e) No Change.

(f) Every Options Participant shall at all times maintain membership in another registered options exchange that is not registered solely under Section 6(g) of the Securities Exchange Act of 1934, *or in FINRA.* Options Participants that transact business with customers shall at all times be members of the FINRA.

(g)–(h) No Change.

Commentary .01 No Change.

Chapter VI, Trading Systems

Section 1, Definitions

The following definitions apply to Chapter VI for the trading of options listed on NOM.

(a)–(f) No Change.

(g) The term ''Time in Force'' shall mean the period of time that the System will hold an order for potential execution, and shall include:

(1) ''Expire Time'' or ''EXPR'' shall mean, for orders so designated, that if after entry into the System, the order is not fully executed, the order (or the unexecuted portion thereof) shall remain available for potential display and/or execution for the amount of time specified by the entering Participant unless canceled by the entering party. EXPR Orders shall be available for entry from [9 a.m.] *the time prior to market open specified by the Exchange on its website* until market close Eastern Time and for execution from 9:30 a.m. until market close.

(2) ''Immediate or Cancel'' or ''IOC'' shall mean for orders so designated, that if after entry into the System a marketable limit order (or unexecuted portion thereof) becomes non-marketable, the order (or unexecuted portion thereof) shall be canceled and returned to the entering participant. IOC Orders shall be available for entry from [9 a.m.] *the time prior to market open specified by the Exchange on its Web site* until market close and for potential execution from 9:30 a.m. until market close. IOC Orders entered between [9 a.m.] *the time specified by the Exchange on its Web site* and 9:30 a.m. Eastern Time will be held within the System until 9:30 a.m. at which time the System shall determine whether such orders are marketable.

(3) ''DAY'' shall mean for orders so designated, that if after entry into the System, the order is not fully executed, the order (or unexecuted portion thereof) shall remain available for potential display and/or execution until market close, unless canceled by the entering party, after which it shall be returned to the entering party. DAY Orders shall be available for entry from [9 a.m.] *the time prior to market open specified by the Exchange on its Web site* until market close and for potential execution from 9:30 a.m. until market close.

(4) ''Good Til Cancelled'' or ''GTC'' shall mean for orders so designated, that if after entry into System, the order is not fully executed, the order (or unexecuted portion thereof) shall remain available for potential display and/or execution unless cancelled by the entering party, or until the option expires, whichever comes first. GTC Orders shall be available for entry from [9 a.m.] *the time prior to market open specified by the Exchange on its Web site* until market close and for potential execution from 9:30 a.m. until market close.

(5) No Change.

(h) No Change.

Chapter VI, Trading Systems

* * * * *

Section 2, Days and Hours of Business

(a) The System operates and shall be available to accept bids and offers and orders from [9 a.m.] *the time prior to market open specified by the Exchange on its Web site* to market close on each business day, unless modified by NOM. Orders and bids and offers shall be open and available for execution as of 9:30 a.m. Eastern Time and shall close as of 4 p.m. Eastern Time except for option contracts on fund shares or broad-based indexes which will close as of 4:15 p.m. Eastern Time.

(b)–(c) No Change.

Chapter VI, Trading Systems

* * * * *

Section 7, Entry and Display Orders

(a) Entry of Orders—Participants can enter orders into the System, subject to the following requirements and conditions:

(1)–(2) No Change.

(3) Orders can be entered into the System (or previously entered orders cancelled) from [9 a.m.] *the time prior to market open specified by the*

[1] 15 U.S.C. 78s(b)(1).

[2] 17 CFR 240.19b–4.

[3] 17 CFR 240.19b–4(f)(6).

Exchange on its Web site until market close.

(b) No Change.

Chapter VI, Trading Systems

* * * * *

Section 9, Nasdaq Closing Cross

(a) Definitions. For the purposes of this rule the term:

(1)–(2) No Change.

(3) ''Imbalance Only Order'' or ''IO'' shall mean an order to buy or sell at a specified price or better that may be executed only during the Nasdaq Closing Cross and only against MOC or LOC orders. IO orders can be entered between [9 a.m.] *the time prior to market open specified by the Exchange on its Web site* and the beginning of the Closing Cross but they cannot be modified after 10 minutes prior to the Closing Cross except to increase the number of contracts. IO orders can be cancelled between 10 and 5 minutes prior to the Closing Cross only by requesting Nasdaq to correct a legitimate error (e.g., side, size, symbol, price or duplication of an order). IO orders cannot be cancelled after 5 minutes prior to the Closing Cross for any reason. IO sell (buy) orders will only execute at or above (below) the System offer (bid) at the time of the Closing Cross.

(4) ''Limit On Close Order'' or ''LOC'' shall mean an order to buy or sell at a specified price or better that is to be executed only during the Nasdaq Closing Cross. LOC orders can be entered, cancelled, and corrected without restriction between [9 a.m.] *the time prior to market open specified by the Exchange on its Web site* and 10 minutes prior to the Closing Cross LOC orders can be cancelled between 10 and 5 minutes prior to the Closing Cross only by requesting Nasdaq to correct a legitimate error (e.g., side, size, symbol, price or duplication of an order). LOC orders cannot be cancelled after 5 minutes prior to the Closing Cross for any reason. LOC Orders will execute only at the price determined by the Nasdaq Closing Cross.

(5) ''Market on Close Order or MOC'' shall mean an order to buy or sell at the market that is to be executed only during the Nasdaq Closing Cross. MOC orders can be entered, cancelled, and corrected between [9 a.m.] *the time prior to market open specified by the Exchange on its Web site* and 10 minutes prior to the Closing Cross MOC orders can be cancelled between 10 and 5 minutes prior to the Closing Cross only by requesting Nasdaq to correct a legitimate error (e.g., side, size, symbol, price or duplication of an order). MOC orders cannot be cancelled after 5 minutes prior to the Closing Cross for any reason. MOC orders will execute only at the price determined by the Nasdaq Closing Cross.

(6)–(7) No Change.

(b) No Change.

Chapter XI, Doing Business with the Public

* * * * *

Section 11, Confirmation to Public Customers

(a) No Change.

(b) The confirmation shall, by appropriate symbols, distinguish between [NOM Transactions and other transactions in options contracts] *Exchange options transactions and other transactions in option contracts though such confirmation does not need to specify the exchange or exchanges on which such option contracts were executed.*

* * * * *

II. Self-Regulatory Organization's Statement of the Purpose of, and Statutory Basis for, the Proposed Rule Change

In its filing with the Commission, NASDAQ included statements concerning the purpose of and basis for the proposed rule change and discussed any comments it received on the proposed rule change. The text of these statements may be examined at the places specified in Item IV below. NASDAQ has prepared summaries, set forth in Sections A, B, and C below, of the most significant aspects of such statements.

A. Self-Regulatory Organization's Statement of the Purpose of, and Statutory Basis for, the Proposed Rule Change

1. Purpose

The purpose of the proposed rule change is to make certain clarifying and noncontroversial changes to NOM rules, as follows.

Chapter II, Section 2

Chapter II, Section 2 currently provides that a Participant must be a member of another registered options exchange that is not registered solely under Section 6(g) of the Act.[4] When it adopted Chapter II, Section 2, Nasdaq made clear its intent not to serve as a Designated Options Examining Authority (''DOEA''), and stated that it would work with the Commission and the other registered options exchanges to ensure that each Options Participant would have as its DOEA a registered options exchange other than Nasdaq.[5] The proposed amendments would provide an alternative to the options exchange membership requirement, such that a NOM Participant that was a member of Financial Industry Regulatory Authority, Inc. (''FINRA'')—itself a DOEA—would not also be required to maintain membership in another registered options exchange.[6]

Chapter VI, Sections 1, 2, 7 and 9

Chapter VI currently contains a number of provisions which permit orders to be submitted to the Exchange no earlier than 9 a.m.[7] The amendments would eliminate this restriction, and would instead provide for orders to be submitted no earlier than the time specified by NOM on its Web site. The proposed amendments are intended to provide flexibility to permit NOM to change this beginning time for order submission as circumstances may dictate from time to time, without filing a proposed rule change with the Commission. The actual hours of trading on NOM would not be affected by this proposal. The Exchange will make information regarding new order entry times available to all market participants at the same time.

Chapter XI, Section 11

Chapter XI, Section 11, currently provides that a confirmation shall, by appropriate symbols, distinguish between NOM Transactions and other transactions in options contracts. The proposed amendments would clarify that while confirmations are required to distinguish between Exchange option transactions and other transactions in option contracts, they do not need to specify the exchange or exchanges on which such option contracts were executed.[8] This proposal is similar to

[4] 15 U.S.C. 78f(g).

[5] *See* Securities Exchange Act Release No. 55667 (April 25, 2007), 72 FR 23869 (May 1, 2007).

[6] *See* Securities Exchange Act Release No. 55532 (March 26, 2007), 72 FR 15729 (April 2, 2007).

[7] *See* Chapter VI, Sections 1(g)(1), 1(g)(2), 1(g)(3), and 1(g)(4), Section 2(a), Section 7(a)(3), and Sections 9(a)(3), 9(a)(4) and 9(a)(5).

[8] The proposed filing is being done pursuant to an industry-wide initiative under the auspices of the Options Self-Regulatory Council (''OSRC''), which is a committee comprised of representatives from each of the options exchanges functioning pursuant to the OSRC Plan (the ''Plan''). *See* Securities Exchange Act Release No. 20158 (September 8, 1983), 48 FR 41256 (September 14, 1983). The Plan is not a National Market System (''NMS'') plan under Section 1 1A of the Act, but rather is a plan to allocate regulatory responsibilities under Rule 17d–2 under the Act. 17 CFR 240.17d–2. As a result of the introduction of multiply listed options and the introduction of the Plan for the Purpose of Creating and Operating an Intermarket Options Market Linkage (''Options

Continued

rule change proposals that have been filed by the American Stock Exchange LLC, the Financial Industry Regulatory Authority, Inc., the Chicago Board Options Exchange, Inc. the NASDAQ OMX PHLX, Inc., the Boston Stock Exchange, Inc., the International Securities Exchange, LLC and NYSE Arca, Inc.[9] The Exchange believes that with the expansion of multi-listing of options and the introduction of new options exchanges, it has become operationally inefficient to require the disclosure of the market center on which an order was executed on the confirmation. As an example, a customer may have a single option order containing numerous option contracts executed on multiple exchanges. As such, it would be inefficient for the executing firm to be required to identify the exchange symbol for each contract executed on that customer's order. This proposal would clarify that written confirmations furnished to a customer will not need to specify the exchange or exchanges on which such option contracts were executed.

2. Statutory Basis

The Exchange believes that its proposal is consistent with Section 6(b) of the Act[10] in general, and furthers the objectives of Section 6(b)(5) of the Act[11] in particular, in that it is designed to promote just and equitable principles of trade, to remove impediments to and perfect the mechanism of a free and open market and a national market system, and, in general to protect investors and the public interest. The Exchange believes that the proposed rules rationalize and clarify existing rules, in a manner that will benefit all market participants. In particular, the proposed amendments to Chapter XI, Section 11 clarify the Exchange's options confirmation rule to better reflect the realities of the modern options market.

B. Self-Regulatory Organization's Statement on Burden on Competition

The Exchange does not believe that the proposed rule change will impose any burden on competition not necessary or appropriate in furtherance of the purposes of the Act.

C. Self-Regulatory Organization's Statement on Comments on the Proposed Rule Change Received From Members, Participants, or Others

No written comments were either solicited or received.

III. Date of Effectiveness of the Proposed Rule Change and Timing for Commission Action

Because the foregoing proposed rule change does not: (1) Significantly affect the protection of investors or the public interest; (2) impose any significant burden on competition; and (3) become operative for 30 days from the date on which it was filed, or such shorter time as the Commission may designate if consistent with the protection of investors and the public interest, it has become effective pursuant to Section 19(b)(3)(A) of the Act[12] and Rule 19b–4(f)(6) thereunder.[13]

A proposed rule change filed under Rule 19b–4(f)(6) normally may not become operative prior to 30 days after the date of filing.[14] However, Rule 19b–4(f)(6)[15] permits the Commission to designate a shorter time if such action is consistent with the protection of investors and the public interest. Nasdaq has requested that the Commission waive the 30-day operative delay. The Exchange believes that waiving the 30-day operative delay is consistent with the protection of investors and the public interest because it would provide market participants with clarified and rationalized rules on an expedited basis. For this reason, the Commission designates the proposal to be operative upon filing with the Commission.[16]

At any time within 60 days of the filing of such proposed rule change, the Commission may summarily abrogate such rule change if it appears to the Commission that such action is necessary or appropriate in the public interest, for the protection of investors, or otherwise in the furtherance of the purposes of the Act.

IV. Solicitation of Comments

Interested persons are invited to submit written data, views and arguments concerning the foregoing, including whether the proposed rule change is consistent with the Act. Comments may be submitted by any of the following methods:

Electronic Comments

- Use the Commission's Internet comment form (*http://www.sec.gov/rules/sro.shtml*); or
- Send an e-mail to *rule-comments@sec.gov.* Please include File Number SR–NASDAQ–2009–064 on the subject line.

Paper Comments

- Send paper comments in triplicate to Elizabeth M. Murphy, Secretary, Securities and Exchange Commission, 100 F Street, NE., Washington, DC 20549–1090.

All submissions should refer to File Number SR–NASDAQ–2009–064. This file number should be included on the subject line if e-mail is used. To help the Commission process and review your comments more efficiently, please use only one method. The Commission will post all comments on the Commission's Internet Web site (*http://www.sec.gov/rules/sro.shtml*). Copies of the submission, all subsequent amendments, all written statements with respect to the proposed rule change that are filed with the Commission, and all written communications relating to the proposed rule change between the Commission and any person, other than those that may be withheld from the public in accordance with the provisions of 5 U.S.C. 552, will be available for inspection and copying in the Commission's Public Reference Room, 100 F Street, NE., Washington, DC 20549, on official business days between the hours of 10 a.m. and 3 p.m. Copies of such filing also will be available for inspection and copying at

Linkage Plan''), the contracts in a customer options order could be executed on more than one options exchange, and the significance of the options exchange, or exchanges, that execute a particular options transaction has diminished significantly. *See* Securities Exchange Act Release No. 43086 (July 28, 2000), 65 FR 48023 (August 4, 2000). Furthermore, the OSRC believes that in light of best execution and disclosure requirements, the usefulness of including on an options confirmation the name of the options exchange, or exchanges, on which the options transaction was effected does not outweigh the operational difficulties of capturing the information given the multiple trading of options and the application of the Options Linkage Plan industry wide.

[9] *See* Securities Exchange Act Release Nos. 58814 (October 20, 2008), 73 FR 63527 (October 24, 2008); 58932 (November 12, 2008), 73 FR 69696 (November 19, 2008); 58980 (November 19, 2008), 73 FR 72091 (November 26, 2008); 59166 (December 29, 2008), 74 FR 328 (January 5, 2009); 59434 (February 23, 2009), 74 FR 9012 (February 27, 2009); 59806 (April 21, 2009), 74 FR 19254 (April 28, 2009); and 59978 (May 27, 2009), 74 FR 26451 (June 2, 2009).

[10] 15 U.S.C. 78f(b).

[11] 15 U.S.C. 78f(b)(5).

[12] 15 U.S.C. 78s(b)(3)(A).

[13] 17 CFR 240.19b–4(f)(6). When filing a proposed rule change pursuant to Rule 19b–4(f)(6) under the Act, an Exchange is required to give the Commission written notice of its intent to file the proposed rule change, along with a brief description and text of the proposed rule change, at least five business days prior to the date of filing of the proposed rule change, or such shorter time as designated by the Commission. The Exchange met this requirement.

[14] 17 CFR 240.19b–4(f)(6)(iii).

[15] *Id.*

[16] For the purposes only of waiving the operative date of this proposal, the Commission has considered the proposed rule's impact on efficiency, competition, and capital formation. *See* 15 U.S.C. 78c(f).

the principal office of Nasdaq. All comments received will be posted without change; the Commission does not edit personal identifying information from submissions. You should submit only information that you wish to make available publicly. All submissions should refer to File Number SR–NASDAQ–2009–064 and should be submitted on or before July 31, 2009.

For the Commission, by the Division of Trading and Markets, pursuant to delegated authority.[17]

Elizabeth M. Murphy,

Secretary.

[FR Doc. E9–16315 Filed 7–9–09; 8:45 am]

BILLING CODE 8010–01–P

SECURITIES AND EXCHANGE COMMISSION

[Release No. 34–60215; File No. SR–NYSE–2006–92]

Self-Regulatory Organizations; New York Stock Exchange LLC; Order Approving Proposed Rule Change, as Modified by Amendment No. 4, To Amend NYSE Rule 452 and Corresponding Listed Company Manual Section 402.08 To Eliminate Broker Discretionary Voting for the Election of Directors, Except for Companies Registered Under the Investment Company Act of 1940, and To Codify Two Previously Published Interpretations That Do Not Permit Broker Discretionary Voting for Material Amendments to Investment Advisory Contracts With an Investment Company

July 1, 2009.

I. Introduction

On October 24, 2006, the New York Stock Exchange LLC (''Exchange'' or ''NYSE'') filed with the Securities and Exchange Commission (''Commission''), pursuant to Section 19(b)(1) of the Securities Exchange Act of 1934 (''Act'')[1] and Rule 19b–4 thereunder,[2] a proposed rule change to amend NYSE Rule 452 and corresponding Section 402.08 of the Listed Company Manual (''Manual'') to eliminate broker discretionary voting for the election of directors. On May 23, 2007, the Exchange filed Amendment No. 1 to the proposed rule change to exempt companies registered under the Investment Company Act of 1940 (''1940 Act'') from the ban on broker discretionary voting for the election of directors. On June 28, 2007, the Exchange filed Amendment No. 2 to the proposed rule change, to codify two previously published interpretations[3] that do not permit broker discretionary voting for material amendments to investment advisory contracts with an investment company. On February 26, 2009, the Exchange filed and withdrew Amendment No. 3 to the proposed rule change for technical reasons. On February 26, 2009, the Exchange filed Amendment No. 4 to the proposed rule change. Amendment No. 4 superseded and replaced the proposal in its entirety. The Commission published the proposed rule change, as modified by Amendment No. 4, for comment in the **Federal Register** on March 6, 2009.[4] The Commission received 153 comments from 137 commenters on the proposal.[5] This order approves the proposed rule change, as modified by Amendment No. 4.

II. Description of the Proposal and Background

A. Description of the Proposal

The Exchange proposes amending NYSE Rule 452 and Section 402.08 of the Manual (together, ''NYSE Rule 452'') to eliminate broker discretionary voting for all elections of directors at shareholder meetings held on or after January 1, 2010,[6] whether contested or not, except for companies registered under the 1940 Act. Currently, NYSE Rule 452 permits brokers to vote without voting instructions from the beneficial owner on uncontested elections of directors.[7] Specifically, the NYSE proposal would add to the list of enumerated items for which a member generally may not give a proxy to vote without instructions from the beneficial owner, the ''election of directors.'' The proposal contains a specific exception, however, for companies registered under the 1940 Act.

In addition, the Exchange proposes amending NYSE Rule 452 to codify two previously published interpretations.[8] First, the NYSE proposes codifying that NYSE Rule 452 would preclude broker discretionary voting on a matter that materially amends an investment advisory contract with an investment company. Second, the NYSE proposes codifying that a material amendment to an investment advisory contract would include any proposal to obtain shareholder approval of an investment company's investment advisory contract with a new investment adviser for which shareholder approval is required by the 1940 Act and the rules thereunder.

B. Background

A shareholder of a public company may hold shares either directly, as the record holder, or indirectly, as the beneficial holder, with the shares held in the name of the beneficial shareholder's broker-dealer, bank nominee, or custodian (''securities intermediary''), which is the record holder. The latter generally is referred to as holding securities in ''street name.''

The NYSE's discretionary voting rule dates back to 1937. Historically, the majority of shareholders held their shares directly as record holders. In 1976, for example, shareholders held approximately 71% of securities of record (in their own name), while only approximately 29% of securities were held by securities intermediaries in street name.[9] The number of beneficial owners holding securities in street name, however, has increased significantly since 1976,[10] with the result that securities intermediaries, on behalf of beneficial owners, now hold a substantial majority of exchange traded

---

[17] 17 CFR 200.30–3(a)(12).

[1] 15 U.S.C. 78s(b)(1).

[2] 17 CFR 240.19b–4.

[3] *See* Securities Exchange Act Release Nos. 30697 (May 13, 1992), 57 FR 21434 (May 20, 1992) (SR–NYSE–92–05) (approval order) and 52569 (October 6, 2005), 70 FR 60118 (October 14, 2005) (SR–NYSE–2005–61) (notice of filing and immediate effectiveness).

[4] *See* Securities Exchange Act Release No. 59464 (February 26, 2009), 74 FR 9864 (March 6, 2009) (''Notice'').

[5] *See* Comment letters in the Commission's Public Reference Room or on the Commission's Web site at *http://www.sec.gov*. For a complete list of comment letters and the short cites to letters used here, *see* Appendix A, attached hereto.

[6] The proposed change to NYSE Rule 452 would not apply to a meeting that was originally scheduled to be held prior to January 1, 2010, but was properly adjourned to a date on or after the effective date.

[7] As discussed in more detail below, under current NYSE Rule 452 a broker can vote without instruction from the beneficial owner provided ''the person in the member organization giving or authorizing the giving of the proxy has no knowledge of any contest as to the action to be taken at the meeting and provided such action is adequately disclosed to stockholders and does not include authorization for a merger, consolidation or any matter which may affect substantially the rights or privileges of such stock.'' *See* current NYSE Rule 452.10(3). Items where a broker is allowed to vote without specific instructions from the beneficial owner under Rule 452 are often referred to as ''routine'' matters. NYSE Rule 452 also currently contains a list of eighteen enumerated items where the broker may not vote without specific voting instructions from the beneficial owner. *See* Notice, *supra* note 4 and *infra* note 14.

[8] The codification will place the interpretations into the rule text of Rule 452.

[9] Final Report of the U.S. Securities and Exchange Commission on the Practice of Recording the Ownership of Securities in the Records of the Issuer in Other Than the Name of the Beneficial Owner of Such Securities (December 3, 1976), at 54.

[10] This is due, among other things, to the advent of margin accounts, technological developments, and clearing efficiencies.

securities.[11] As a result, NYSE's discretionary voting rule has taken on increased significance in the voting of corporate shares at annual meetings.

Under Rule 451, when a public company furnishes proxy materials to its record shareholders, securities intermediaries that hold securities in street name must deliver the proxy materials to the beneficial shareholders within a certain time frame and request voting instructions from the beneficial shareholders.[12] If beneficial shareholders return voting instructions, the securities intermediaries vote their shares accordingly. However, if beneficial shareholders do not return voting instructions, securities intermediaries may, in certain situations, vote their shares at the intermediaries' discretion. Specifically, if voting instructions have not been received by the tenth day preceding the meeting date, under current NYSE Rule 452, brokers may vote on behalf of the beneficial shareholders on certain matters where there is no contest and the item does not include authorization for a merger, consolidation, or any matter which may substantially affect the rights or privileges of the stock.[13] The rule also contains eighteen specific items on which the broker generally may not vote without instructions from the beneficial owner.[14] Items where the broker can vote without instructions are referred to as ''routine'' matters. Among other matters, the ''uncontested'' election of directors is considered a ''routine'' matter under current NYSE Rule 452, and thus can be voted by the broker in its discretion if the beneficial owner has not returned voting instructions within the required time period.

With the large proportion of shares now held in street name, the impact of the broker vote on the election of directors has become increasingly significant.[15] In the view of some commenters, brokers tend to vote in accordance with management's recommendation.[16] According to the NYSE, in recent years its interpretation of a ''contested election'' has been questioned by a variety of persons,[17] as an increasing number of proxy campaigns have targeted the election of directors without a formal contest. These campaigns generally do not involve a competing slate of directors or a formal counter-solicitation opposed by management, and hence, are not considered ''contests'' by the NYSE under NYSE Rule 452.[18] Examples of these campaigns include ''just vote no'' or ''withhold'' campaigns, where one or more investors express dissatisfaction with the performance of the company or its management, and urge shareholders to withhold their votes for one or more of management's nominees for director. NYSE views director elections subject to these campaigns as eligible for broker discretionary voting under current Rule 452.[19] Concerns have been expressed that, in certain ''just vote no'' or ''withhold'' campaigns, the broker vote for management has made the difference and allowed directors subject to these campaigns to be elected, which would not have happened but for NYSE's discretionary voting rule.[20]

[11] It has been estimated that approximately 85% of exchange traded shares are held by securities intermediaries in street name. *See* Securities Exchange Act Release No. 50758 (November 30, 2004), 69 FR 70852 (December 7, 2004) (noting that, at the end of 2002, the Depository Trust Company (''DTC'') had on deposit approximately 84% of the shares issued by domestic companies listed on the NYSE and approximately 88% of the shares issued by domestic companies listed on the Nasdaq Stock Exchange). Securities held in ''street name'' by securities intermediaries are deposited at the DTC.

[12] *See* NYSE Rule 451(b)(1) (providing, in part, that for matters which may be voted without instructions under Rule 452, if voting instructions ''are not received by the tenth day before the meeting, the proxy may be given at discretion by the owner of record of the stock; provided * * * the proxy soliciting material is transmitted to the beneficial owner of the stock * * * at least fifteen days before the meeting.''); *see also* Rule 14b–1, 17 CFR 240.14b–1. Rule 14b–1 under the Act does not require brokers or dealers to request voting instructions from beneficial owners, but they are required under that Rule to forward the proxy materials to the beneficial owners within a certain timeframe. However, Rule 14b–2, 17 CFR 240.14b–2, which applies to banks that exercise fiduciary powers, requires banks to forward proxy materials to beneficial owners within a certain timeframe, as well as an executed proxy or a request for voting instructions.

[13] *See supra* note 7.

[14] *See* Notice, *supra* note 4. Presently, NYSE Rule 452 lists 18 specific matters that cannot be voted by the broker without instructions and are often referred to as ''non-routine'' matters. These 18 categories are a matter that: (1) Is not submitted to stockholders by means of a proxy statement comparable to that specified in Schedule 14–A of the Commission; (2) is the subject of a counter-solicitation, or is part of a proposal made by a stockholder which is being opposed by management (*i.e.,* a contest); (3) relates to a merger or consolidation (except when the company's proposal is to merge with its own wholly owned subsidiary, provided its shareholders dissenting thereto do not have rights of appraisal); (4) involves right of appraisal; (5) authorizes mortgaging of property; (6) authorizes or creates indebtedness or increases the authorized amount of indebtedness; (7) authorizes or creates a preferred stock or increases the authorized amount of an existing preferred stock; (8) alters the terms or conditions of existing stock or indebtedness; (9) involves waiver or modification of preemptive rights (except when the company's proposal is to waive such rights with respect to shares being offered pursuant to stock option or purchase plans involving the additional issuance of not more than 5% of the company's outstanding common shares); (10) changes existing quorum requirements with respect to stockholder meetings; (11) alters voting provisions or the proportionate voting power of a stock, or the number of its votes per share (except where cumulative voting provisions govern the number of votes per share for election of directors and the company's proposal involves a change in the number of its directors by not more than 10% or not more than one); (12) authorizes the implementation of any equity compensation plan, or any material revision to the terms of any existing equity compensation plan (whether or not stockholder approval of such plan is required by subsection 8 of Section 303A of the Exchange's Listed Company Manual); (13) authorizes (a) a new profit-sharing or special remuneration plan, or a new retirement plan, the annual cost of which will amount to more than 10% of average annual income before taxes for the preceding five years, or (b) the amendment of an existing plan which would bring its cost above 10% of such average annual income before taxes, but exceptions may be made in cases of (a) retirement plans based on agreement or negotiations with labor unions (or which have been or are to be approved by such unions), and (b) any related retirement plan for benefit of non-union employees having terms substantially equivalent to the terms of such union-negotiated plan, which is submitted for action of stockholders concurrently with such union-negotiated plan; (14) changes the purposes or powers of a company to an extent which would permit it to change to a materially different line of business and it is the company's stated intention to make such a change; (15) authorizes the acquisition of property, assets, or a company, where the consideration to be given has a fair value approximating 20% or more of the market value of the previously outstanding shares; (16) authorizes the sale or other disposition of assets or earning power approximating 20% or more of those existing prior to the transaction; (17) authorizes a transaction not in the ordinary course of business in which an officer, director or substantial security holder has a direct or indirect interest; and (18) reduces earned surplus by 51% or more, or reduces earned surplus to an amount less than the aggregate of three years' common stock dividends computed at the current dividend rate.

[15] *See e.g.,* FSBA 2 Letter; *see generally* AFSCME Letter; CII 4 Letter; Colorado PERA Letter; CTW Letter; CTW 2 Letter; and FSBA Letter.

[16] *See* CFA 2 Letter; CII 2 Letter; CII 4 Letter; Colorado PERA Letter; Cox Letter; CTW Letter; CTW 2 Letter; FSBA 2 Letter; Glass Lewis Letter; Hermes Equity Letter; NYSBA Sec. Reg. Letter; OPERS Letter; Relational Investors Letter; TIAA–CREF Letter; and Trillium Letter; *see also* Notice, *supra* note 4; Report and Recommendation of the Proxy Working Group, dated June 5, 2006 (''PWG Report''), at 9.

[17] *See* Notice, *supra* note 4.

[18] *See* NYSE Rule 452.11(2).

[19] *See* Notice, *supra* note 4.

[20] *See* AFSCME Letter; CalPERS 3 Letter; CtW Letter; CtW 2 Letter; FSBA Letter; FSBA 2 Letter; and Glass Lewis Letter; *see also* PWG Report, *infra* note 16, at 9. Several commenters stated that rather than eliminating the broker vote for all elections of directors the Commission should address the problem by making NYSE redefine what constitutes a contested election, *see* ABA Fed. Reg. Letter; ABC Letter; Alston Letter; BB&T Letter; *see also* Suburban Letter (urging further consideration of this alternative), and make alternative proxy contest strategies such as ''just vote no'' campaigns a contest that is not subject to broker discretionary voting under NYSE Rule 452. *See* ABC Letter; ABC 2 Letter; ABC 3 Letter; Alston Letter; Broadridge Letter (suggesting that the NYSE rules be defined to eliminate broker votes where there is a controversy, such as a ''just vote no'' campaign); *see also* ABA Fed. Reg. Letter. The Commission notes that the Proxy Working Group, *see infra* note 21, considered this approach but noted that expanding the definition of contest to include ''just vote no'' campaigns, especially in light of the increased use of the internet to run proxy contests, could raise

In April 2005, the NYSE formed a working group to review its rules regarding the proxy voting process (''Proxy Working Group''). The Proxy Working Group was composed of representatives from listed companies, NYSE member organizations, lawyers, institutional investors, and individual investors.[21] The Proxy Working Group reviewed applicable NYSE rules relating to the proxy process and proxy fees, with a particular focus on NYSE Rule 452.[22] The Proxy Working Group ultimately issued a report recommending that the election of directors be ineligible for broker discretionary voting under NYSE Rule 452, with the result that brokers holding shares in street name could not vote on the election of directors, whether the election is contested or uncontested, without specific voting instructions from the beneficial owners. The Proxy Working Group believed that the election of directors could no longer be viewed as a ''routine'' matter in the life of a corporation. According to the Proxy Working Group, it ''is well established under law * * * [that] 'the business and affairs of every corporation * * * shall be managed by or under the direction of' the board of directors. Investors, courts, regulators and others expect directors to be accountable for the corporate decision-making process, and the primary way that accountability is expressed is through the director election process.''[23] The Proxy Working Group concluded that ''[d]irectors are simply too important to the corporation for their election to ever be considered routine.''[24] Although the Proxy Working Group recognized that the proposed change to Rule 452 may result in increased costs, it believed that ''it is a cost required to be paid for better corporate governance * * *.''[25]

In August 2007, the Proxy Working Group issued an Addendum to its report, recommending that the proposed change to NYSE Rule 452 should not apply to investment companies registered under the 1940 Act. The Proxy Working Group concluded that an exception for registered investment companies was appropriate given the fact, among other things, that they are subject to a unique regulatory regime.[26]

III. Summary of Comments

The Commission received 153 comment letters from 137 commenters.[27] Twenty-eight commenters explicitly supported the proposal,[28] and twelve commenters explicitly opposed the proposal.[29] Ninety-seven of the commenters neither explicitly supported nor opposed the proposal.[30] Ninety-five of these ninety-seven commenters expressed concerns with the proposal,[31] and ninety-three urged that the Commission not take

significant practical difficulties, such as defining what is a campaign or whether there are any limitations or other minimal requirements for a contest. *See* PWG Report, *infra* note 16, at 20. Moreover, the Commission notes that merely redefining what constitutes a contested election would still allow brokers who do not have an economic interest in the company to vote in director elections that are uncontested and would not further the goals of the proposed rule change. *See infra* notes 21 through 23 and accompanying text. Finally, the Commission notes that the NYSE, in making its proposal, reviewed the PWG Report, as well as comments submitted to the NYSE on the PWG recommendation. The NYSE states in its rule filing that its proposal on Rule 452 was being made in light of the recommendations of the Proxy Working Group and its own conclusions that the election of directors should no longer be deemed a ''routine matter'' under its rules.

[21] Members of the Proxy Working Group at the time of the PWG Report were: Larry W. Sonsini, Chairman, Wilson Sonsini Goodrich & Rosati; Rosemary Berkery, Executive Vice President and General Counsel, Merrill Lynch & Co., Inc., represented by Kevin Moynihan of Merrill Lynch & Co.; Glenn Booraem, Principal and Assistant Fund Controller, Vanguard Group; Peter Clapman, Senior Vice President and Chief Counsel for Corporate Governance, TIAA–CREF; Margaret Foran, Vice President-Corporate Governance & Corporate Secretary, Pfizer, Inc.; Gary Glynn, President, US. Steel Pension Fund; Amy Goodman, Partner, Gibson, Dunn & Crutcher LLP; Richard H. Koppes, Of Counsel, Jones Day; Jeffrey L. McWaters, Chairman and Chief Executive Officer, Amerigroup Corporation; Stephen P. Norman, Corporate Secretary, American Express Company; James E. Parsons, Corporate and Securities Counsel, Exxon Mobil Corporation; Judith Smith, Managing Director, Morgan Stanley & Co.; Esta Stecher, Executive Vice President and General Counsel, Goldman Sachs & Co., represented by Beverly O'Toole of Goldman Sachs & Co.; and Kurt Stocker, Professor, Northwestern University, Medill School of Journalism. *See* PWG Report, *supra* note 16. The Exchange attached the PWG Report as part of the proposal. In August 2007, the Proxy Working Group issued an addendum to its report (''Addendum''), available as part of the Exchange's proposal.

[22] In particular, the Proxy Working Group looked at NYSE Rules 450 to 460 and 465.

[23] *See* PWG Report, *supra* note 16, at 21 (citing Del. Code tit. 8, Section 141(b) (2005)).

[24] *See id.*

[25] *See id.*

[26] *See* Addendum, *supra* note 21, at 3.

[27] *See supra* note 5. NYSE also received 39 letters on the PWG Report and Recommendation related to amending Rule 452. NYSE submitted these letters as part of the proposal. *See* discussion in Notice, *supra* note 4, and Exhibit 2 to the NYSE's proposed rule change.

[28] *See* AFSCME Letter; BCIMC Letter; CalPERS Letter; CalPERS 2 Letter; CalPERS 3 Letter; CalSTRS Letter; CCGG Letter; CCGG 2 Letter; CFA Letter; CFA 2 Letter; City of London Letter; CII Letter; CII 2 Letter; CII 3 Letter; CII 4 Letter; Colorado PERA Letter; Corporate Governance Letter; Cox Letter; CtW Letter; CtW 2 Letter; Dobkin Letter; FSBA Letter; FSBA 2 Letter; Glass Lewis Letter; GovernanceMetrics Letter; Gratzer Letter (''[e]liminate the rule''); Hagberg Letter; Hermes Equity Letter; ICI 4 Letter (supporting the proposal as amended); Newground Letter; OPERS Letter; PWG Letter (while the PWG continued to believe that the election of directors could no longer be considered a routine event in the life of a corporation, it also believed that the Commission should consider using the opportunity created by the NYSE's proposal to review the broader proxy process) (*see* discussion at Section IV.F, Commission Consideration of the Entire Proxy Process, further below); Railpen Letter; Relational Investors Letter; Sod'ali Letter; TIAA–CREF Letter; and Trillium Letter.

[29] *See* ABC Letter; ABC 2 Letter; ABC 3 Letter; Altman Letter; AmEx Letter; Astoria Financial Letter; BB&T Letter; Corning Letter; FedEx Letter; FPL Letter; NIRI Letter; Stanton Letter; Suffolk Letter; and UQM Letter.

[30] *See* ABA Fed. Reg. Letter; Aetna Letter; Agilent Letter; Alcoa Letter; Alston Letter; Anadarko Letter; ArvinMeritor Letter; Avery Letter; Avis Letter; BNSF Letter; Broadridge Letter; Boeing Letter; Business Roundtable Letter; CA Letter; Cardinal Letter; Central Vermont Letter; Ceridian Letter; Chamber of Commerce 2 Letter; Chevron Letter; Cigna Letter; Cincinnati Financial Letter; Computershare Letter; Connecticut Water Letter; ConocoPhillips Letter; Continental Letter; Crescent Letter; CSX Letter; Cummins Letter; DTE Letter; Eaton Letter; Eli Lilly Letter; EV Letter; Exxon Mobil Letter; Fidelity Letter; First American Letter; First Financial Letter; Furniture Brands Letter; GE Letter; General Mills Letter; GM Letter; Governance Professionals Letter; Gulf Letter; Harman Letter; Helmerich Letter; Honeywell Letter; Illinois Stock Letter; International Paper Letter; Intel Letter; Jacksonville Letter; Johnson Letter; J.P. Morgan Letter; Manifest Letter; McKesson Letter; Medco Letter; MGE Letter; Monster Letter; NS Letter; Nucor Letter; NYSBA Sec. Reg. Letter; Office Depot Letter; OTC Letter; Otter Tail Letter; P&G Letter; Peabody Letter; Pfizer Letter; Platinum Letter; Praxair Letter; Provident Letter; Provident Financial Letter; Quest Letter; Realogy Letter; Routh Letter; Royal Gold Letter; Ryder Letter; S&C Letter; SCC Letter; Schwab Letter; Securities Transfer Letter; SIFMA Letter; STA Letter; Standard Letter; StockTrans Letter; Suburban Letter; Superlattice Letter; Sutherland Letter; Synalloy Letter; Textron Letter; TI Letter; Unitrin Letter; Veeco Letter; Verizon Letter; Wachtell Letter; Washington Banking Letter; Whirlpool Letter; Xcel Letter; Xerox Letter; and YRC Letter.

[31] *See* ABA Fed. Reg. Letter; Aetna Letter; Agilent Letter; Alcoa Letter; Alston Letter; Anadarko Letter; ArvinMeritor Letter; Avery Letter; Avis Letter; BNSF Letter; Boeing Letter; Business Roundtable Letter; CA Letter; Cardinal Letter; Central Vermont Letter; Ceridian Letter; Chamber of Commerce 2 Letter; Chevron Letter; Cigna Letter; Cincinnati Financial Letter; Computershare Letter; Connecticut Water Letter; ConocoPhillips Letter; Continental Letter; Crescent Letter; CSX Letter; Cummins Letter; DTE Letter; Eaton Letter; Eli Lilly Letter; EV Letter; Exxon Mobil Letter; Fidelity Letter; First American Letter; First Financial Letter; Furniture Brands Letter; GE Letter; General Mills Letter; GM Letter; Governance Professionals Letter; Gulf Letter; Harman Letter; Helmerich Letter; Honeywell Letter; Illinois Stock; Intel Letter; International Paper Letter; Jacksonville Letter; Johnson Letter; J.P. Morgan Letter; Manifest Letter; McKesson Letter; Medco Letter; MGE Letter; Monster Letter; NS Letter; Nucor Letter; NYSBA Sec. Reg. Letter; Office Depot Letter; OTC Letter; Otter Tail Letter; P&G Letter; Peabody Letter; Pfizer Letter; Platinum Letter; Praxair Letter; Provident Letter; Provident Financial Letter; Quest Letter; Realogy Letter; Routh Letter; Royal Gold Letter; Ryder Letter; S&C Letter; SCC Letter; SCC 2 Letter; Schwab Letter; Securities Transfer Letter; STA Letter; Standard Letter; StockTrans Letter; Suburban Letter; Superlattice Letter; Sutherland Letter; Synalloy Letter; Textron Letter; TI Letter; Unitrin Letter; Veeco Letter; Verizon Letter; Wachtell Letter; Washington Banking Letter; Whirlpool Letter; Xcel Letter; Xerox Letter; and YRC Letter.

action on the proposal at this time.[32] One commenter stated that the proposal raised sufficient issues to warrant consideration by the full Commission at a public meeting, and that consideration of the proposal by delegated authority was inappropriate.[33]

IV. Discussion and Analysis of Comment Letters

After careful review and consideration of the comment letters, the Commission finds that the proposed rule change, as modified by Amendment No. 4, is consistent with the Act and the rules and regulations thereunder applicable to a national securities exchange.[34] In particular, the Commission finds that the proposed rule change is consistent with the requirements of Section 6(b)(5) of the Act,[35] which provides that the rules of the exchange must be designed to prevent fraudulent and manipulative acts and practices, to promote just and equitable principles of trade, to foster cooperation and coordination with persons engaged in regulating, clearing, settling, processing information with respect to, and facilitating transactions in securities, to remove impediments to and perfect the mechanism of a free and open market and a national market system, and, in general, to protect investors and the public interest; and are not designed to permit unfair discrimination between customers, issuers, brokers, or dealers.

The Commission, Congress, states, investors and other market participants have long recognized the critical role that directors play in a corporation. The board of directors has ultimate responsibility for the management of the business and the affairs of the company.[36] Shareholders, through their vote, vest with the directors they elect this critical duty to manage the company with which they have entrusted their resources.[37] The board of directors generally does not participate in the daily business affairs of the company. It delegates these responsibilities to management the board selects and supervises. The board, however, ultimately is accountable to shareholders for corporate decisions.[38] The most fundamental way in which shareholders can ensure that directors remain accountable to them for the directors' performance of these critical duties is through the director election process.[39]

As discussed below, the Commission believes that it is reasonable and consistent with the Act for NYSE to determine that the election of directors should no longer be an item eligible for broker discretionary voting, particularly given the large proportion of shares that today are held in street name, the importance of corporate governance and accountability expressed through the election process, and the concern that the broker vote could potentially distort election results.[40] As the Proxy Working Group also concluded, the election of directors is not a ''routine'' issue for either the corporation or the shareholders; it is a key event in the operation and direction of the corporation and the shareholders' exercise of their rights and interests as the owners of the corporation.[41] As such, the Commission believes that NYSE's proposal should better enfranchise shareholders by helping assure that votes on matters as critical as the election of directors are determined by those with an economic interest in the company,[42] rather than the broker who has no such economic interest, and also should enhance corporate governance and accountability to shareholders.

The Commission also believes that the NYSE's proposed change codifying existing NYSE interpretations of NYSE Rule 452 is consistent with the

[32] *See* ABA Fed. Reg. Letter; Aetna Letter; Agilent Letter; Alcoa Letter; Alston Letter; Anadarko Letter; ArvinMeritor Letter; Avery Letter; Avis Letter; BNSF Letter; Boeing Letter; Business Roundtable Letter; CA Letter; Cardinal Letter; Central Vermont Letter; Ceridian Letter; Chamber of Commerce 2 Letter; Chevron Letter; Cigna Letter; Cincinnati Financial Letter; Computershare Letter; Connecticut Water Letter; ConocoPhillips Letter; Continental Letter; Crescent Letter; CSX Letter; Cummins Letter; DTE Letter; Eaton Letter; Eli Lilly Letter; EV Letter; Exxon Mobil Letter; Fidelity Letter; First American Letter; First Financial Letter; Furniture Brands Letter; GE Letter; General Mills Letter; GM Letter; Governance Professionals Letter; Gulf Letter; Harman Letter; Helmerich Letter; Honeywell Letter; Illinois Stock Letter; Intel Letter; International Paper Letter; Jacksonville Letter; Johnson Letter; J.P. Morgan Letter; Manifest Letter; McKesson Letter; Medco Letter; MGE Letter; Monster Letter; NS Letter; Nucor Letter; NYSBA Sec. Reg. Letter; Office Depot Letter; OTC Letter; Otter Tail Letter; P&G Letter; Peabody Letter; Pfizer Letter; Platinum Letter; Praxair Letter; Provident Letter; Provident Financial Letter; Quest Letter; Realogy Letter; Routh Letter; Royal Gold Letter; Ryder Letter; S&C Letter; SCC Letter; Schwab Letter; Securities Transfer Letter; STA Letter; Standard Letter; StockTrans Letter; Superlattice Letter; Synalloy Letter; Textron Letter; TI Letter; Unitrin Letter; Veeco Letter; Verizon Letter; Wachtell Letter; Washington Banking Letter; Whirlpool Letter; Xcel Letter; Xerox Letter; and YRC Letter.

[33] *See* SCC 2 Letter.

[34] In approving the proposed rule change, the Commission considered the proposed rule change's impact on efficiency, competition, and capital formation. 15 U.S.C. 78c(f). The Commission notes that several commenters believed that the NYSE's proposal would make the proxy voting system less efficient. *See* Central Vermont Letter; Connecticut Water Letter; First Financial Letter; Jacksonville Letter; McKesson Letter; Monster Letter; Nucor Letter; Provident Letter; Quest Letter; Synalloy Letter; and Veeco Letter; *see also* Astoria Financial Letter (''[F]or many public companies, broker voting remains the most efficient means to obtain a quorum for shareholder meetings''); BB&T Letter (cost of obtaining quorum absent broker discretionary voting would ''be an enormous loss to investors,'' and that ''redefinition of what constitutes a 'contested' election is the most efficient manner to address the real corporate governance concerns implied by the Amendment''); and Governance Professionals Letter (''The focus should be on solutions that contain costs and make the proxy voting system more efficient, rather than on increased costs and inefficiency.''); *but see* Relational Investors Letter (''The new administrative burdens created by this amendment are far outweighed by the benefits to efficient and effective corporate governance.''); *see also* PWG Report, *supra* note 16. As discussed further below, the Commission believes that the NYSE's proposed rule change should better enfranchise shareholders, and thereby enhance corporate governance and accountability, by assuring that voting is determined by those with an economic interest in the company on matters as critical as the election of directors, rather than permitting brokers to cast votes without instructions for shares beneficially owned by their customers, when the broker has no economic interest in those shares. Therefore, the Commission believes the NYSE's proposed rule change should protect investors and the public interest. Further, the Commission does not believe that the proposed change will necessarily make the voting process materially less efficient. The mechanics of the proxy voting procedure as to how beneficial owners return voting instructions to their brokers are not changing. NYSE Rule 452 would continue to allow the broker to vote on other routine matters, such as the ratification of independent auditors, which will help companies meet quorum requirements, and therefore alleviate the efficiency concerns raised by commenters. As discussed further below, pursuant to Section 19(b) and after reviewing the comments, the Commission believes the proposed rule change should be approved.

[35] 15 U.S.C. 78f(b)(5).

[36] *See, e.g.,* Del. Code Ann. Tit. 8, Section 141(a) (''The business and affairs of every corporation organized under this chapter shall be managed by or under the direction of a board of directors, except as may be otherwise provided in this chapter or in its certificate of incorporation.'').

[37] *See e.g.,* PWG Report, *supra* note 16, at 21; *see also* Bruce A. Toth and Jason L. Booth, The Board of Directors, Corp. Prac. Series (BNA), at A–3.

[38] *See* Toth and Booth, The Board of Directors, Corp. Prac. Series, at A–3.

[39] *See* PWG Report, *supra* note 16, at 21.

[40] Broker votes can distort election results both by changing the outcome of an election and by creating a perception that a candidate (or group of candidates) has greater support than would be the case considering only the votes of beneficial owners. That perception, and in particular an understanding of the lack of substantial support for a director, even if he or she receives enough votes to be elected, can affect the decisions of the board and shareholders. *See e.g.,* PWG Report, *supra* note 16, at 9 and n. 12.

[41] *See* PWG Report, *supra* note 16, at 21.

[42] The Commission recognizes that, even under the NYSE's proposal, certain situations will continue to exist where a person with an economic interest in a company may not be able to vote the shares, such as when shares are purchased after the record date for a shareholder meeting. Nevertheless, the NYSE's proposal should make substantial strides in aligning a securityholder's voting decision on director elections with the economic interest in the shares, as it will prohibit a broker holding shares in street name, who does not have an economic interest in the company, from voting on behalf of the beneficial owner in director elections.

requirements of the Act. As discussed below, these proposed amendments will codify two previous interpretations that were adopted by the NYSE to help ensure the full and effective voting rights of investment company shareholders on material matters.[43] The Commission believes that these changes are consistent with the requirements under Section 6(b)(5) of the Act[44] that the rules of the Exchange be designed to promote just and equitable principles of trade, to remove impediments to and perfect the mechanism of a free and open market and, in general, to protect investors and the public interest.

A. Increased Costs for Companies To Achieve Quorum

Several commenters believed that the NYSE's proposal to eliminate the broker discretionary vote would make it more difficult for companies to obtain a quorum[45] and elect directors.[46] Some commenters believed that the relatively low retail shareholder participation rate in corporate elections would increase the difficulty of obtaining a quorum under NYSE's proposal.[47] Commenters also stated that the proposal would increase the cost to a company of obtaining a quorum,[48] by requiring them to incur higher proxy solicitation costs[49] in order to communicate with shareholders, urge them to participate in director elections[50] and support board-nominated candidates.[51] For example, one commenter believed that it would need ''to retain a proxy solicitor even in the absence of a 'contest' * * * just to attempt to achieve a quorum.''[52] Several commenters noted that smaller issuers, in particular, would be negatively affected by the NYSE proposal, given their tendency to have a higher proportion of retail shareholders,[53] so that smaller issuers would have to expend a disproportionate amount of additional resources to solicit shareholder votes, and obtain a quorum.[54]

Some commenters also expressed concern with, or noted the shortcomings of, the current system of communicating with shareholders,[55] and stated that the proposal should be evaluated in connection with a review of shareholder communication rules.[56] Three commenters expressed concern that the proposed rule change could magnify the difficulties issuers have in communicating with shareholders, especially with objecting beneficial owners (''OBOs'').[57] Commenters recommended that Commission rules be revised to facilitate the ability of issuers to contact shareholders directly.[58] According to one commenter, ''[p]ermitting issuers to communicate with their shareholders * * * will enable them to 'get out the vote,' enhancing their ability to obtain needed quorums and successfully re-solicit shareholders, if necessary.''[59]

Other commenters believed that quorum concerns were not a valid reason for allowing brokers to continue to vote uninstructed shares in the

[43] *See supra* note 3. Two commenters supported the proposal regarding investment advisory contracts. *See* CFA 2 Letter and ICI 4 Letter.

[44] 15 U.S.C. 78f(b)(5).

[45] *See* ABA Fed. Reg. Letter; ABC 3 Letter; Alston Letter; Altman Letter; Anadarko Letter; ArvinMeritor Letter; Avery Letter; Avis Letter; BNSF Letter; Boeing Letter; Business Roundtable Letter; CA Letter; Cardinal Letter; Ceridian Letter; Chamber of Commerce Letter; Chamber of Commerce 2 Letter; Cigna Letter; Computershare Letter; ConocoPhillips Letter; Crescent Letter; CSX Letter; Cummins Letter; Eaton Letter; Eli Lilly Letter; Exxon Mobil Letter; FPL Letter; General Mills Letter; GM Letter; Governance Professionals Letter; Harman Letter; Helmerich Letter; ICI Letter; ICI 2 Letter; ICI 3 Letter; ICI 4 Letter; Intel Letter; International Paper Letter; Johnson Letter; J.P. Morgan Letter; Medco Letter; NS Letter; NYSBA Sec. Reg. Letter; Office Depot Letter; Peabody Letter; Pfizer Letter; Royal Gold Letter; Ryder Letter; S&C Letter; Schwab Letter; Securities Transfer Letter; STA Letter; Suburban Letter; Textron Letter; TI Letter; Unitrin Letter; UQM Letter; Verizon Letter; Wachtell Letter; Washington Banking Letter; Whirlpool Letter; Xcel Letter; Xerox Letter; YRC Letter; *see also* CII Letter; and CII 2 Letter; *see also* Sutherland Letter.

[46] *See* ICI Letter; ICI 2 Letter; ICI 3, and ICI 4 Letter.

[47] *See* Alston Letter; Intel Letter; S&C Letter; Suburban Letter; and Wachtell Letter.

[48] *See* ABC Letter; Agilent Letter; Astoria Financial Letter; Central Vermont Letter; Connecticut Water Letter; First Financial Letter; ICI 3 Letter; Jacksonville Letter; McKesson Letter; Monster Letter; Nucor Letter; Provident Letter; Quest Letter; Schwab Letter; Suburban Letter; Suffolk Bank Letter; Synalloy Letter; Veeco Letter; and Wachtell Letter; *see also* Sutherland Letter.

[49] *See* ABC Letter; Chamber of Commerce Letter; Chamber of Commerce 2 Letter; Governance Professionals Letter; ICI 2 Letter; ICI 3 Letter; ICI 4 Letter; NIRI Letter; Praxair Letter; Quest Letter; Realogy Letter; Ryder Letter; Schwab Letter; STA Letter; Suburban Letter; Suffolk Bank Letter; Textron Letter; and YRC Letter; *see also* ABC Letter.

[50] *See* ABA Fed. Reg. Letter; ABC Letter; Aetna Letter; Aglient Letter; Alston Letter; Altman Letter; AmEx Letter; Anadarko Letter; ArvinMeritor Letter; Avery Letter; Avis Letter; BB&T Letter; BNSF Letter; Boeing Letter; Business Roundtable Letter; CA Letter; Ceridian Letter; Cigna Letter; ConocoPhillips Letter; CSX Letter; Cummins Letter; Eaton Letter; Eli Lilly Letter; FPL Letter; General Mills Letter; GM Letter; Governance Professionals Letter; Harman Letter; International Paper Letter; Jacksonville Letter; Johnson Letter; Medco Letter; MGE Letter; Monster Letter; NS Letter; Nucor Letter; Office Depot Letter; Peabody Letter; Pfizer Letter; Praxair Letter; Realogy Letter; Ryder Letter; SCC Letter; Synalloy Letter; Textron Letter; UQM Letter, Whirlpool Letter; Xerox Letter; and YRC Letter.

[51] *See* FedEx Letter.

[52] *See* Suburban Letter; *see also* ABC Letter (stating that in ''2004, had the broker vote not been in effect, 85 percent of NYSE companies would have been working to reach quorum in the final nine days before their meetings while 23 percent would not have reached quorum by the meeting date. * * * [C]ompanies uncertain of their ability to reach quorum * * * would be forced to hire proxy solicitors. * * * '').

[53] *See* ABC 3 Letter; Agilent Letter; Alston Letter; AmEx Letter; Central Vermont Letter; Computershare Letter; Connecticut Water Letter; First Financial Letter; Governance Professionals Letter; Jacksonville Letter; McKesson Letter; Monster Letter; Nucor Letter; Provident Letter; Quest Letter; SCC Letter; and Synalloy Letter; *see also* Sutherland Letter (stating that the exemption should also apply to business development companies).

[54] *See* ABA Fed. Reg. Letter; ABC 3 Letter; Agilent Letter; Alston Letter; AmEx Letter; Astoria Financial Letter; Central Vermont Letter; Chamber of Commerce 2 Letter; Computershare Letter; Connecticut Water Letter; Crescent Letter; First Financial Letter; Governance Professionals Letter; Helmerich Letter; Jacksonville Letter; McKesson Letter; Monster Letter; Nucor Letter; Provident Letter; Quest Letter; Synalloy Letter; and Washington Banking Letter; *see also* Sutherland Letter.

[55] *See* Alcoa Letter; Anadarko Letter; ArvinMeritor Letter; Avery Letter; Avis Letter; Boeing Letter; Business Roundtable Letter; CA Letter; Cardinal Letter; Ceridian Letter; Chevron Letter; Cincinnati Financial Letter; Computershare Letter; ConocoPhillips Letter; Continental Letter; Corning Letter; Crescent Letter; CSX Letter; Cummins Letter; Eaton Letter; Eli Lilly Letter; EV Letter; Exxon Mobil Letter; Fidelity Letter; First American Letter; FPL Letter; GE Letter; General Mills Letter; GM Letter; Gulf Letter; Helmerich Letter; Illinois Stock Letter; Intel Letter; International Paper Letter; Johnson Letter; Manifest Letter; Medco Letter; MGE Letter; NIRI Letter; NS Letter; Office Depot Letter; OTC Letter; Otter Tail Letter; Peabody Letter; Pfizer Letter; Platinum Letter; Praxair Letter; PWG Letter; Realogy Letter; Routh Letter; Royal Gold Letter; Ryder Letter; STA Letter; Securities Transfer Letter; Standard Letter; StockTrans Letter; Superlattice Letter; Textron Letter; Unitrin Letter; Verizon Letter; Washington Banking Letter; Whirlpool Letter; Xcel Letter; Xerox Letter; and YRC Letter.

[56] *See* Aetna Letter; Anadarko Letter; ArvinMeritor Letter; Avery Letter; Avis Letter; BNSF Letter; Boeing Letter; Business Roundtable Letter; CA Letter; Cardinal Letter; Ceridian Letter; Chamber of Commerce 2 Letter; Cigna Letter; Cincinnati Financial Letter; Computershare Letter; ConocoPhillips Letter; Continental Letter; Corning Letter; Crescent Letter; CSX Letter; Cummins Letter; Eaton Letter; Eli Lilly Letter; EV Letter; Exxon Mobil Letter; FedEx Letter; Fidelity Letter; First American Letter; GE Letter; General Mills Letter; GM Letter; Gulf Letter; Helmerich Letter; Honeywell Letter; Illinois Stock Letter; Intel Letter; International Paper Letter; Johnson Letter; NS Letter; Office Depot Letter; OTC Letter; Otter Tail Letter; P&G Letter; Peabody Letter; Pfizer Letter; Platinum Letter; Praxair Letter; Realogy Letter; Routh Letter; Ryder Letter; STA Letter; Securities Transfer Letter; Standard Letter; StockTrans Letter; Superlattice Letter; Textron Letter; TI Letter; Unitrin Letter; Verizon Letter; Washington Banking Letter; Whirlpool Letter; Xcel Letter; Xerox Letter; and YRC Letter.

[57] *See* Alcoa Letter; Corning Letter; and NIRI Letter.

OBOs are shareholders who object to having their names and addresses disclosed to companies whose shares they own.

[58] *See* Alcoa Letter; Computershare Letter; Corning Letter; ICI Letter; ICI 2 Letter; NIRI Letter; PWG Letter; STA Letter; and TI Letter; *see also* Chamber of Commerce 2 Letter (stating that any amendment to Rule 452 should be accompanied by an improved shareholder communication system).

[59] *See* ICI 2 Letter.

election of directors.[60] For example, one commenter believed that the participation of institutional investors would assure a quorum for most issuers, except for a limited number of small companies.[61] Moreover, several commenters believed that quorum concerns could be addressed simply by including a ''routine'' item on the ballot,[62] such as the ratification of auditors,[63] or with appropriate changes in state law to permit shares held by brokers to count solely for purposes of establishing quorum.[64] Also, another commenter believed that ''issuers can communicate effectively to shareholders through established, robust and efficient systems currently in place.'' [65]

The Commission acknowledges commenters' concerns regarding the potential for the proposed rule change to impact the ability of some companies to achieve quorum. For example, the Proxy Working Group recognized that smaller issuers may have certain increased costs in obtaining quorum due to the high percentage of shares held by retail investors.[66] However, as noted by several commenters, issuers with a large institutional shareholder base or with another routine matter on their proxies, such as ratification of independent auditors, should not face material additional difficulties in achieving a quorum.[67] The Commission notes that a majority of companies other than registered investment companies include the ratification of independent auditors as a matter for shareholders to approve, even though such approval is not required by law,[68] so that these companies should not, as a practical matter, encounter the quorum issue as articulated by the commenters. Quorum concerns for other companies, including small companies, may be addressed to the extent that these companies include an item on their ballot that may be considered a routine matter. The Commission also notes a report showing that, if NYSE's proposal were implemented, most companies would nevertheless achieve quorum, albeit at a date closer to their annual meetings than previously.[69] More fundamentally, however, although issuers may incur increased proxy solicitation costs under the NYSE's proposal, the Commission agrees with the NYSE and the Proxy Working Group that these costs are justified by, among other things, assuring voting on matters as critical as the election of directors can no longer be determined by brokers without instructions from the beneficial owner, thereby enhancing corporate governance and accountability.[70] Moreover, to the extent there are issues regarding establishing a quorum, we do not believe having uninstructed votes cast on the election of a director by broker-dealers who lack the shareholders' economic interests in the corporation is the appropriate way to address the issue.

As discussed further below,[71] the Commission believes that shareholder education is important for encouraging retail shareholders to vote, and could play a key role both in reducing any additional proxy solicitation costs incurred by companies, as well as achieving the policy goal of fostering investor participation in corporate governance. The Commission notes that the Proxy Working Group has established an Investor Education Sub-Committee. The Commission supports the Proxy Working Group's efforts to develop, and encourages the NYSE and its member firms to implement, an investor education effort to inform investors about the amendments to NYSE Rule 452, the proxy voting process, and the importance of voting.

B. Disenfranchising Retail Shareholders and Growing Influence of Third Parties

Several commenters stated that the proposal could disenfranchise individual shareholders,[72] because eliminating broker discretionary voting may be counter to shareholders' assumptions that their brokers would vote on their behalf if they did not vote.[73] Other commenters believed that the proposed rule change would shift voting power toward small blocks of voters [74] and special interest groups wishing to use minority stock positions to pursue their own special interests,[75] and non-investment objectives.[76] Moreover, several commenters

[60] *See* CII 4 Letter; Colorado PERA Letter; FSBA Letter; FSBA 2 Letter; Glass Lewis Letter; Hagberg Letter; and TIAA–CREF Letter; *see also* CCGG Letter (elimination of U.S. broker non-votes would not adversely impact the ability of Canadian issuers to obtain quorum).

[61] *See* Glass Lewis Letter.

[62] *See* Hagberg Letter; Glass Lewis Letter; and TIAA–CREF Letter.

[63] *See* CII Letter; CII 2 Letter; CII 4 Letter; Colorado PERA Letter; Glass Lewis Letter; Hagberg Letter; and TIAA–CREF Letter; *contra* ICI 3 Letter (stating that ''[a]sking funds to take this action *for the sole purpose* of achieving a quorum'' is unacceptable since funds have not been required to ratify the selection of fund auditors since 2001.).

[64] *See* CalPERS Letter; Computershare Letter; FSBA 2 Letter; ICI 2 Letter; S&C Letter; Sod'ali Letter; and TIAA–CREF Letter; *see also* Suburban Letter (urging further consideration of this alternative).

[65] *See* SIFMA Letter.

[66] *See* Addendum, *supra* note 21, at 3; *see also* PWG Report, *supra* note 16, at 21.

[67] *See* CII Letter; CII 2 Letter; CII 4 Letter; Colorado PERA Letter; Glass Lewis Letter; Hagberg Letter; and TIAA–CREF Letter.

[68] *See* CII 4 Letter (stating that including an auditor ratification ''resolution on the proxy is a step that many corporations already take on their own and one that the Council believes is a best practice for all public companies'').

[69] *See* Broadridge Letter and attached report, Updated Analysis of the Broker Vote, dated February 3, 2009. Moreover, the Commission notes that NYSE's proposed rule change is consistent with the rules of other self-regulatory organizations. For example, the Financial Industry Regulatory Authority, Inc. (''FINRA'') and The NASDAQ Stock Market LLC (''Nasdaq'') do not permit broker discretionary voting for their members, unless they do so pursuant to the rules of another national securities exchange of which they are also a member and the member clearly indicates which rule it is following. *See* National Association of Securities Dealers, Inc. (''NASD'') Rule 2260 and Nasdaq Rule 2260. We note that NYSE Rule 452 is a member rule. Accordingly, NYSE members would follow the NYSE rule regardless of where a security is listed. Further, while other self-regulatory organizations currently allow discretionary voting, we would expect these markets to make changes to conform to the NYSE's new rules to eliminate any disparities involving voting depending on where shares are held. *See* NYSE Amex Equities Rule 452 and Chicago Board Options Exchange, Incorporated Rule 31.74.

[70] *See* PWG Report, *supra* note 16, at 21 and Notice, *supra* note 4. With respect to concerns raised by commenters regarding communications with shareholders, the Commission notes that the proposed rule change would not alter the existing system of shareholder communications, which is outside the scope of NYSE's proposed rule change.

[71] *See infra* Section IV.D., Shareholder Education.

[72] *See* Aetna Letter; Alcoa Letter; Altman Letter; AmEx Letter; Andarko Letter; Arvin Meritor Letter; Avery Letter; Avis Letter; BNSF Letter; Boeing Letter; Business Roundtable Letter; CA Letter; Cardinal Letter; Ceridian Letter; Chamber of Commerce 2 Letter; Chevron Letter; Cigna Letter; Cincinnati Financial Letter; Continental Letter; ConocoPhillips Letter; Corning Letter; Crescent Letter; CSX Letter; Cummins Letter; DTE Letter; Eaton Letter; Eli Lilly Letter; EV Letter; Fidelity Letter; First Financial Letter; FPL Letter; Furniture Brands Letter; General Mills Letter; GM Letter; Gulf Letter; Harman Letter; Illinois Stock Letter; Intel Letter; International Paper Letter; Jacksonville Letter; Johnson Letter; J.P. Morgan Letter; McKesson Letter; Medco Letter; MGE Letter; Monster Letter; NS Letter; Nucor Letter; Office Depot Letter; OTC Letter; Otter Tail Letter; Peabody Letter; Pfizer Letter; Platinum Letter; Praxair Letter; Provident Letter; Provident Financial Letter; Quest Letter; Realogy Letter; Routh Letter; Ryder Letter; SCC Letter; STA Letter; Standard Letter; Stanton Letter; StockTrans Letter; Superlattice Letter; Synalloy Letter; Textron Letter; TI Letter; Veeco Letter; Verizon Letter; Wachtell Letter; Whirlpool Letter; Xcel Letter; Xerox Letter; and YRC Letter.

[73] *See* Aetna Letter; Alcoa Letter; AmEx Letter; Anadarko Letter; ArvinMeritor Letter; Avery Letter; Avis Letter; BNSF Letter; Boeing Letter; Business Roundtable Letter; CA Letter; Cardinal Letter; Ceridian Letter; Cigna Letter; ConocoPhillips Letter; Crescent Letter; CSX Letter; Cummins Letter; Eaton Letter; Eli Lilly Letter; FPL Letter; General Mills Letter; GM Letter; Harman Letter; International Paper Letter; Johnson Letter; Medco Letter; NS Letter; Office Depot Letter; Peabody Letter; Pfizer Letter; Praxair Letter; Realogy Letter; Ryder Letter; STA Letter; Textron Letter; Verizon Letter; Wachtell Letter; Whirlpool Letter; Xcel Letter; Xerox Letter; and YRC Letter.

[74] *See* UQM Letter.

[75] *See* Astoria Financial Letter; Chamber of Commerce 2 Letter; and S&C Letter.

[76] *See* Chamber of Commerce Letter and Chamber of Commerce 2 Letter.

expressed concern that retail shareholder participation in company elections has decreased in recent years,[77] especially under e-proxy,[78] so that the NYSE's proposal would shift disproportionate weight to institutional investors,[79] and increase power in the hands of the few shareholders who vote.[80]

Several commenters also believed that eliminating broker discretionary voting could increase the influence of proxy advisory firms, which provide, among other things, voting recommendations to their institutional investor clients.[81] A number of commenters expressed concerns about the degree of influence that proxy advisory firms have in corporate elections.[82] Other commenters expressed concern that stock lending and financial derivatives,[83] as well as the impact of over-voting and under-voting,[84] distort the shareholder voting process. Commenters urged the Commission to consider these issues in conjunction with the proposal.[85]

However, other commenters believed that the proposal would ensure that voting results were not distorted by broker votes[86] and that the true owners of corporations were not disenfranchised.[87] For example, one commenter stated that ''eliminating the ability of brokers to vote uninstructed client shares for the election of directors is an important first step in improving shareholder democracy and enhancing the integrity of the proxy voting system.''[88] Several commenters opined that continuing to count broker votes would diminish the strides being made toward more effective corporate governance, and stressed the importance of shareholder participation as more issuers move towards majority voting standards for the election of directors.[89] Commenters also suggested that the broker vote may have impacted the result in some recent corporate elections.[90]

The Commission does not believe that the proposal would disenfranchise retail shareholders, but would instead be enfranchising since it helps assure that only those with an economic interest in a company may vote on matters as critical as the election of directors. Moreover, the Commission notes that research conducted on behalf of the Proxy Working Group indicates that the NYSE's proposal may, in fact, be consistent with an assumption of many shareholders that only they can vote their shares.[91] As noted above, the Commission also encourages the efforts of the Proxy Working Group to develop an investor education effort to inform investors about the amendments to NYSE Rule 452, the proxy voting process, and the importance of voting.

As to the concerns that the proposal could increase the impact of special interest groups holding minority share

[77] *See* Agilent Letter; Alcoa Letter; Alston Letter; Altman Letter; Central Vermont Letter; Chevron Letter; Computershare Letter; Connecticut Water Letter; Corporate Governance Letter; DTE Letter; Eli Lilly Letter; Exxon Mobil Letter; First Financial Letter; Furniture Brands Letter; Governance Professionals Letter; McKesson Letter; Medco Letter; Monster Letter; Nucor Letter; NYSBA Sec. Reg. Letter; Provident Letter; Provident Financial Letter; Quest Letter; S&C Letter; Synalloy Letter; Veeco Letter; and Wachtell Letter.

[78] *See* AFSCME Letter; Agilent Letter; Alcoa Letter; Alston Letter; Altman Letter; Central Vermont Letter; Chevron Letter; CII 4 Letter; Colorado PERA Letter; Connecticut Water Letter; Corporate Governance Letter; DTE Letter; Exxon Mobil Letter; First Financial Letter; Furniture Brands Letter; Governance Professionals Letter; McKesson Letter; Monster Letter; Nucor Letter; NYSBA Sec. Reg. Letter; Provident Letter; Provident Financial Letter; Quest Letter; S&C Letter; Synalloy Letter; and Wachtell Letter.

[79] *See* Agilent Letter; Altman Letter; AmEx Letter; BB&T Letter; Central Vermont Letter; Chevron Letter; Connecticut Water Letter; Corning Letter; DTE Letter; First Financial Letter; Furniture Brands Letter; Governance Professionals Letter; Intel Letter; Jacksonville Letter; J.P. Morgan Letter; McKesson Letter; Medco Letter; Monster Letter; Nucor Letter; Provident Letter; Provident Financial Letter; Quest Letter; Stanton Letter; Synalloy Letter; Veeco Letter; and Wachtell Letter.

[80] *See* Alston Letter and NIRI Letter. Another commenter opined that the proposal confuses civic governance with corporate governance. *See* Suffolk Bank Letter.

[81] *See* Aetna Letter; Agilent Letter; Alcoa Letter; Altman Letter; Anadarko Letter; ArvinMeritor Letter; Avery Letter; Avis Letter; Boeing Letter; Business Roundtable Letter; CA Letter; Central Vermont Letter; Ceridian Letter; Chamber of Commerce 2 Letter; Cigna Letter; Connecticut Water Letter; ConocoPhillips Letter; CSX Letter; Cummins Letter; DTE Letter; Eaton Letter; Eli Lilly Letter; First Financial Letter; FPL Letter; Furniture Brands Letter; General Mills Letter; GM Letter; Governance Professionals Letter; Harman Letter; Intel Letter; International Paper Letter; Jacksonville Letter; Johnson Letter; J.P. Morgan Letter; McKesson Letter; Medco Letter; Monster Letter; NIRI Letter; NS Letter; Nucor Letter; Office Depot Letter; Peabody Letter; Pfizer Letter; Praxair Letter; Provident Letter; Provident Financial Letter; Quest Letter; Ryder Letter; SCC Letter; Synalloy Letter; Textron Letter; Veeco Letter; Wachtell Letter; Whirlpool Letter; Xcel Letter; Xerox Letter; and YRC Letter. Another commenter stated that the proposal might result in a conflict of interest for proxy advisory firms. *See* Cardinal Letter.

[82] *See* Cincinnati Financial Letter; Computershare Letter; Continental Letter; Corning Letter; Crescent Letter; EV Letter; Exxon Mobil Letter; Fidelity Letter; First American Letter; Gulf Letter; Helmerich Letter; Honeywell Letter; Illinois Stock Letter; Manifest Letter; MGE Letter; OTC Letter; Otter Tail Letter; Platinum Letter; Routh Letter; Royal Gold Letter; S&C Letter; Securities Transfer Letter; Standard Letter; StockTrans Letter; Superlattice Letter; TI Letter; and Washington Banking Letter.

Other commenters noted the lack of competition in the current proxy distribution process. *See* SCC Letter; and STA Letter. Some commenters suggested that the role of proxy service providers be evaluated in conjunction with the proposal. *See* Cincinnati Financial Letter; Continental Letter; Crescent Letter; EV Letter; Fidelity Letter; First American Letter; Gulf Letter, Illinois Stock Letter; MGE Letter; OTC Letter; Otter Tail Letter; Platinum Letter; Routh Letter; S&C Letter; Securities Transfer Letter; Standard Letter; StockTrans letter; and Superlattice Letter. The Commission notes that these issues are outside the scope of NYSE's proposal.

[83] *See* Alcoa Letter; Cardinal Letter; Cincinnati Financial Letter; Continental Letter; Crescent Letter; EV Letter; Fidelity Letter; First American Letter; Gulf Letter; Helmerich Letter; Illinois Stock Letter; MGE Letter; OTC Letter; Otter Tail Letter; Platinum Letter; Routh Letter; Royal Gold Letter; Securities Transfer Letter; SCC Letter; STA Letter; Standard Letter; StockTrans Letter; Superlattice Letter; Unitrin Letter; and Washington Banking Letter.

[84] *See* Cardinal Letter; Cincinnati Financial Letter; Continental Letter; Crescent Letter; EV Letter; Fidelity Letter; First American Letter; Gulf Letter; Helmerich Letter; Illinois Stock Letter; MGE Letter; OTC Letter; Otter Tail Letter; Platinum Letter; Routh Letter; Royal Gold Letter; Securities Transfer Letter; SCC Letter; STA Letter; Standard Letter; StockTrans Letter; Superlattice Letter; Unitrin Letter; and Washington Banking Letter; *contra* SIFMA Letter. Over-voting occurs when a broker-dealer casts more votes on behalf of itself and its customers than it is entitled to cast. An under-vote occurs when the broker-dealer casts less votes on behalf of itself and its customers than it is entitled to cast.

[85] *See* Cardinal Letter; Cincinnati Financial Letter; Continental Letter; Crescent Letter; EV Letter; Fidelity Letter; First American Letter; Gulf Letter; Helmerich Letter; Illinois Stock Letter; Manifest Letter; OTC Letter; Otter Tail Letter; Platinum Letter, Routh Letter; Royal Gold Letter; Securities Transfer Letter; STA Letter; Standard Letter; StockTrans Letter; Superlattice Letter; Unitrin Letter; and Washington Banking Letter. One commenter, however, stated that brokers are able to accurately calculate the number of equity shares eligible for voting, as ''broker-dealers are required to have robust and precise accounting systems in place to ensure the integrity of their records of share ownership.'' *See* SIFMA Letter.

[86] *See* AFSCME Letter; CCGG Letter; CCGG 2 Letter; CII 2 Letter; CII 4 Letter; Colorado PERA Letter; FSBA Letter; FSBA 2 Letter; Glass Lewis Letter; Hagberg Letter; OPERS Letter; Railpen Letter; *see also* CalPERS Letter (proposal would ''increase the credibility and fairness of the election process''); CtW Letter; CtW 2 Letter; and Trillium Letter.

[87] *See* CtW Letter; CtW 2 Letter; FSBA Letter; FSBA 2 Letter; Glass Lewis Letter; Railpen Letter; Relational Investors Letter (also noting that brokers do not have direct economic interest); and Trillium Letter.

[88] *See* CCGG 2 Letter.

[89] *See* CII 4 Letter; Colorado PERA Letter; CtW Letter; Hermes Equity Letter; Railpen Letter; and TIAA–CREF Letter.

[90] *See* AFSCME Letter; CalPERS 3 Letter; CtW Letter; CtW 2 Letter; FSBA Letter; FSBA 2 Letter; and Glass Lewis Letter.

[91] *See* Investor Attitudes Study, attached as Exhibit B to the NYSE's proposal, at page 18 (''Investor Attitudes Study''). The Investor Attitudes Study showed that while 37 percent of stockholders believed that if they did not vote their proxy on routine matters their shares may be voted by their brokers; 30 percent of stockholders believed that if they did not vote their proxy, their shares would not be voted. The Investor Attitudes Study showed that even those stockholders who understood that their broker may vote their shares failed to completely understand how those shares could be voted. Out of the 37 percent cited to in the Investor Attitudes Study, 10 percent of stockholders believed that their shares would be voted by their brokerage firm based on the firm's preference; while 27 percent believed that their brokerage firm would vote in accordance with the Board of Director's or the company's recommendations. *See* Investor Attitudes Study at 18.

positions, the Commission believes that it is not a basis for not approving the proposed rule change. Even if this is the result in some cases, it remains consistent with the purposes of the proposed rule change, including assuring that investors with an economic interest in the company vote on matters as critical as the election of directors, thereby enhancing corporate governance and accountability.

With regard to the concern that proxy advisory firm recommendations could have increased influence on director elections,[92] the Commission notes that issues relating to the use of proxy advisory services by institutions and others, and whether that use should be further regulated, is a matter that will be considered by the Commission as it examines broader proxy issues. It is not, however, germane to, and does not need to be resolved to approve, the NYSE's proposal. While the Commission acknowledges the possibility that, with the elimination of the broker vote, the vote of institutions or others that use proxy advisory services may, at least in the short term, represent a larger percentage of the votes returned in director elections, the Commission believes the goals of the NYSE's proposal, as described above, are consistent with Section 6(b)(5) of the Act[93] in that the proposal should protect investors and the public interest by barring brokers from voting on behalf of investors in uncontested elections of directors when they have no economic interest in the corporation or the outcome. The Commission further notes that institutional investors, whether relying on proxy advisory firms or not, must vote the institutions' own shares and, in so doing, must discharge their fiduciary duties to act in the best interest of their investors and avoid conflicts of interest; institutions are not relieved of their fiduciary responsibilities simply by following the recommendations of a proxy advisor.[94]

The Commission has also considered the various other concerns raised by commenters about the broader proxy process, including the impact of stock lending and financial derivatives, and over-voting and under-voting issues.[95] While the Commission will separately address issues such as these as it examines proxy and voting matters generally, they do not directly implicate the NYSE's proposal. The fact that there may be more to be done in these areas is not a reason for disapproving the NYSE's proposal if, as the Commission believes, the NYSE's proposed rule change is consistent with Section 6(b)(5) of the Act.[96]

C. Impact on Companies With Majority Vote Standards for Election of Directors

Several commenters raised concerns about the particular impact the proposal could have on companies that have adopted a majority vote standard for the election of directors.[97] Typically, companies that have adopted a majority vote standard require each director to receive a majority of the votes cast in order to be elected.[98] Historically, most public companies elected directors under a plurality vote standard, meaning that the person(s) receiving the most votes would serve as a director regardless of whether the shares voted for that person constituted a majority of the shares cast.[99]

Several commenters believed that companies employing a majority vote standard for director elections may have particular difficulty in obtaining majority support for director nominees were NYSE's proposal to be approved.[100] Specifically, commenters noted that the elimination of broker discretionary voting, coupled with majority voting, would make it more difficult for these companies to obtain adequate votes to overcome a ''vote no'' campaign by activist shareholders,[101] and thus would disproportionately empower minority shareholder groups.[102] Two commenters suggested that the difficulty of obtaining a majority vote without broker discretionary voting might discourage issuers from adopting a majority vote standard.[103]

According to an analysis submitted by one commenter, however, in calendar year 2007, 373 NYSE-listed companies had majority vote standard for the election of directors.[104] Analyzing the elections of those majority vote companies, the analysis found that only eight out of 2,718 directors received at least 50 percent withhold votes based on actual votes from returned proxy cards by shareholders, while six directors received at least 50 percent withhold votes using broker voting.[105] Thus, according to the commenter, only two more directors out of 2,718 failed to receive a majority without broker votes.

While NYSE's proposal may make it somewhat more difficult for a director in a majority vote company to survive a ''just vote no'' or similar campaign, the Commission continues to believe the proposal is consistent with the requirements of Section 6(b)(5) of the Act, which requires that the rules of an exchange be designed to protect investors and the public interest, by assuring that voting on matters as critical as the election of directors can no longer be determined by brokers without instructions from the beneficial owner, thereby enhancing corporate

[92] *See* notes *supra* 81 and 82 and accompanying text.

[93] 15 U.S.C. 78f(b)(5).

[94] *See, e.g.,* 29 U.S.C. 1104 (setting forth the fiduciary duties under the Employee Retirement Income Security Act).

[95] *See supra* notes 83, 84, 85 and accompanying text.

[96] *See also supra* note 42.

[97] *See* Aetna Letter; Alcoa Letter; Anadarko Letter; ArvinMeritor Letter; Astoria Financial Letter; Avery Letter; Avis Letter; BB&T Letter; BNSF Letter; Boeing Letter; Business Roundtable Letter; CA Letter; Ceridian Letter; Cigna Letter; ConocoPhillips Letter; CSX Letter; Cummins Letter; Eaton Letter; Eli Lilly Letter; FedEx Letter; FPL Letter; GE Letter; General Mills Letter; GM Letter; Harman Letter; Helmerich Letter; International Paper Letter; Johnson Letter; J.P. Morgan Letter; Medco Letter; NS Letter; Office Depot Letter; Peabody Letter; Pfizer Letter; Praxair Letter; Royal Gold Letter; Ryder Letter; S&C Letter; Textron Letter; TI Letter; Unitrin Letter; Washington Banking Letter; Whirlpool Letter; Xcel Letter; Xerox Letter; and YRC Letter.

[98] Some companies have also adopted a policy that requires a director to resign if not elected by a majority of the votes cast, since under the laws of certain states, if an incumbent director is not elected, he or she continues to serve as a holdover director until a successor is duly elected and qualified. *See generally* S&C Letter. *See also* Delaware General Corporation Law Section 141(b) (''Each director shall hold office until such director's successor is elected and qualified or until such director's earlier resignation or removal.'') and California Corporation Code Section 301(b) (''Each director, including a director elected to fill a vacancy, shall hold office until the expiration of the term for which elected and until a successor has been elected and qualified.'').

[99] *See* PWG Report, *supra* note 16, at 12–13. Many companies with a majority vote standard for election of directors retain a plurality vote standard in the event of a contested election of directors. As noted by commenters, in recent years, a trend toward majority voting has emerged. *See* text accompanying note 89, *supra*.

[100] *See* FedEx Letter; Helmerich Letter; Royal Gold Letter; Unitrin Letter; Wachtell Letter; and Washington Banking Letter.

[101] *See* Alcoa Letter and S&C Letter.

[102] *See* BB&T Letter.

[103] *See* NYSBA Sec. Reg. Letter and Wachtell Letter.

[104] *See* Broadridge Letter and attached analysis. The Corporate Library reports that as of December 2008, 49.5 percent of companies in the S&P 500 had made the switch to majority voting for director elections and another 18.4 percent had, while retaining a plurality standard, adopted a policy requiring that a director who does not receive majority support must submit his or her resignation. On the other hand, the plurality voting standard is still the standard at the majority of smaller companies in the Russell 1000 and 3000 indices, with 54.5 percent of companies in the Russell 1000 and 74.9 percent of the companies in the Russell 3000 still using a straight plurality voting standard. *See* The Corporate Library Analyst Alert, December 2008. As noted earlier, under a plurality vote standard, the person receiving the most votes will serve as the director. Thus, companies that elect directors under a plurality vote standard would have less difficulty in obtaining votes to overcome a ''just vote no'' or ''withhold'' campaign.

[105] Broadridge also found that seven directors out of 2,718 directors received greater than or equal to 50 percent withhold votes based on proportional voting. *See id.*

governance and accountability. In making this determination, the Commission recognizes that the increasing percentage of shares held in street name, in conjunction with the greater use of just vote no or withhold vote campaigns may have resulted in broker voting under Rule 452 affecting voting on certain non-contested director elections in ways not contemplated in 1937. Accordingly, in light of these developments and concerns, we believe it is consistent with Section 6(b)(5) of the Act for the NYSE to determine that their member brokers should no longer be voting without instructions on behalf of their customers in director elections.

D. Shareholder Education

Several commenters believed that shareholder education was a critical component to making NYSE's proposal workable,[106] and shareholders would need to be educated about the proxy process and the importance of voting before the proposal could be implemented.[107] One commenter stated that the ''potential adverse effects'' of the proposal were increased if the proposal were adopted without shareholder education.[108] Another commenter believed that director elections should only become ineligible for broker voting when the NYSE and other constituents were satisfied that shareholders would exercise their voting rights.[109] Commenters emphasized the importance of shareholder education with respect to voting rights and director elections,[110] and some commenters urged the Commission (either alone or in conjunction with others) to undertake educational efforts designed to increase voting participation by retail shareholders.[111] One commenter stated that shareholders would generally benefit from shareholder education about broker discretionary voting,[112] while other commenters indicated that approval of the proposal should be in conjunction with a shareholder education initiative.[113]

As noted above, the Commission supports the Proxy Working Group's efforts to develop, and encourages NYSE and its member firms to implement, an investor education effort to inform investors about the amendments to NYSE Rule 452, the proxy voting process, and the importance of voting. The Commission believes the proposal offers substantial investor benefits, as noted above, so that its implementation should not be delayed. In addition, because implementation of the proposal will not occur until January 2010, there should be sufficient time for NYSE to inform market participants of the changes to its rules on broker discretionary voting.

E. Alternatives of Proportional Voting and Client Directed Voting

While not part of the NYSE's proposal, several commenters discussed proportional voting in their letters. In general, under proportional voting, a broker would vote shares held by it in street name, for which voting instructions for directors have not been received, in proportion to the votes cast by other retail clients of that broker.[114] Some commenters endorsed the concept of proportional voting in general,[115] and several supported proportional voting as an alternative to the NYSE's proposal.[116] Other commenters stated that proportional voting should be considered as part of a comprehensive review of the proxy voting system.[117] Several commenters were concerned that proportional voting, although potentially effective, would be eliminated under the proposal.[118] Commenters stated that proportional voting could provide an even more accurate reflection of the sentiment of retail shareholders than eliminating broker discretionary voting.[119]

Several commenters also discussed client directed voting as an alternative to the proposal,[120] or believed that client directed voting should be considered in conjunction with the proposal.[121] Under client directed voting, for those elections where the beneficial owners fail to return specific voting instructions, brokers would vote the shares according to the beneficial owners' standing directions. These standing directions could be given by beneficial owners at the time they sign their brokerage agreements, or periodically thereafter. Some commenters believed that client directed voting had merit, either to complement the NYSE's proposal or as an alternative.[122]

On the other hand, several commenters stated that eliminating broker discretionary voting is preferable to these alternative approaches, including proportional voting.[123] Some

[106] *See* Business Roundtable Letter; Chamber of Commerce 2 Letter; Crescent Letter; GE Letter; and PWG Letter. *But see* Suburban Letter.

[107] *See* Chamber of Commerce 2 Letter; Governance Professionals Letter; ICI Letter; and ICI 2 Letter.

[108] *See* NYSBA Sec. Reg. Letter.

[109] *See* ICI Letter and ICI 2 Letter.

[110] *See* Sod'ali Letter; and Verizon Letter.

[111] *See* Corporate Governance Letter (also encouraging the Commission to encourage institutional investors to announce their proxy votes in advance of meetings and facilitating the development of systems like the Investor Suffrage Movement and ProxyDemocracy) and NIRI Letter.

[112] *See* Broadridge Letter.

[113] *See* Computershare Letter; Newground Letter; and S&C Letter.

[114] Proportional voting may be implemented in two ways. Each broker would vote based on the proportion of the votes cast: (1) Held by such broker or (2) held by all brokers. Proportional voting also could reflect the entirety of votes cast, not just the retail vote.

[115] *See* ABA Fed. Reg. Letter; ABC Letter; ABC 3 Letter; Agilent Letter; AmEx Letter; Connecticut Water Letter; DTE Letter; Exxon Mobil Letter; First Financial Letter; Furniture Brands Letter; GE Letter; Governance Professionals Letter; Honeywell Letter; ICI Letter; ICI 2 Letter; Jacksonville Letter; J.P. Morgan Letter; McKesson Letter; Medco Letter; Monster Letter; Nucor Letter; NYSBA Sec. Reg. Letter; Provident Letter; Provident Financial Letter; Quest Letter; S&C Letter; Schwab Letter; SIFMA Letter; Synalloy Letter; TI Letter; Veeco Letter; and Wachtell Letter; *see also* PWG Letter (no objection to members of SIFMA implementing proportional voting).

[116] *See* ABA Sec. Reg. Letter; ABC Letter (supporting proportional voting on a broker-by-broker basis); ABC 2 Letter (supporting proportional voting on a broker-by-broker basis); ABC 3 Letter; Agilent Letter; Alston Letter; BB&T Letter; Broadridge Letter; Business Roundtable Letter; Connecticut Water Letter; DTE Letter; First Financial Letter; Furniture Brands Letter; ICI Letter; ICI 2 Letter (recommending proportional voting only in instances where a minimum number of beneficial owners vote, or alternatively, a minimum percentage of shares outstanding are voted); Jacksonville Letter; McKesson Letter; Monster Letter; Nucor Letter; Provident Letter; Provident Financial Letter; Quest Letter; S&C Letter; Schwab Letter (proportional voting is a ''better first step'' than eliminating discretionary broker voting); Synalloy Letter; TI Letter; Unitrin Letter; and Veeco Letter.

[117] *See* AmEx Letter; Chamber of Commerce 2 Letter; Governance Professionals Letter; and Honeywell Letter. Other commenters believed that proportional voting and/or client directed voting should be considered in conjunction with any change to NYSE Rule 452. *See* Exxon Mobil Letter; and J.P. Morgan Letter.

[118] *See* ABA Fed. Reg. Letter; Agilent Letter; Business Roundtable Letter; Connecticut Water Letter; DTE Letter; First Financial Letter; Furniture Brands Letter; GE Letter; Governance Professionals Letter; Jacksonville Letter; J.P. Morgan Letter; McKesson Letter; Medco Letter; Monster Letter; Nucor Letter; Provident Letter; Provident Financial Letter; Quest Letter; Synalloy Letter; Veeco Letter; and Wachtell Letter; *see also* Intel Letter.

[119] *See* ABA Fed. Reg. Letter; ABC 3 Letter; Chevron Letter; Connecticut Water Letter; First Financial Letter; Furniture Brands Letter; GE Letter; Jacksonville Letter; J.P. Morgan Letter; McKesson Letter; Medco Letter; Monster Letter; Nucor Letter; NYSBA Sec. Reg. Letter; Provident Letter; Provident Financial Letter; Quest Letter; Synalloy Letter; and Veeco Letter.

[120] *See* ABA Fed. Reg. Letter; ABC 2 Letter; ABC 3 Letter; Agilent Letter; Business Roundtable Letter; Chamber of Commerce 2 Letter; Connecticut Water Letter; DTE Letter; First Financial Letter; Furniture Brands Letter; GE Letter; Intel Letter; Jacksonville Letter; McKesson Letter; Monster Letter; Nucor Letter; Provident Letter; Provident Financial Letter; Quest Letter; Synalloy Letter; and Veeco Letter.

[121] *See* AmEx Letter; Governance Professionals Letter; Honeywell Letter; and J.P. Morgan Letter; and SCC Letter.

[122] *See* ABC 2 Letter; ABC 3 Letter; GE Letter; and Jacksonville Letter.

[123] *See* CalSTRS Letter, CCGG 2 Letter; CII Letter; CII 2 Letter; CII 4 Letter; Colorado PERA Letter;

Continued

commenters believed that proportional voting could complicate the proxy voting process and result in abuses,[124] continue to compromise the integrity of proxy voting,[125] or provide ''a disproportionate weight to the votes of disaffected shareholders.'' [126] Other commenters stated that proportional voting violates the ''one share, one vote'' principle.[127] Still other commenters recommended further research and consideration on this alternative.[128]

For the reasons discussed above, the Commission continues to believe that it is consistent with the requirements of Section 6(b)(5) of the Act to protect investors and the public interest for NYSE to eliminate broker discretionary voting in director elections. While several commenters believed that proportional voting would most accurately represent the retail vote, the Commission notes that proportional voting could have a distortive impact, depending on how it is implemented.[129] In addition, proportional voting would allow votes to be cast by someone other than the person with an economic interest in the security.[130] With respect to client directed voting, the Commission notes that it raises a variety of questions and concerns, such as requiring shareholders to make a voting determination in advance of receiving a proxy statement with the disclosures mandated under the federal securities laws and without consideration of the issues to be voted upon. Finally, the Commission notes that the fact that there may be other reasonable alternatives does not mean that the rule change proposed by the NYSE is inconsistent with Section 6(b)(5) of the Act.[131] For the reasons discussed above, the Commission finds the proposed rule change consistent with the requirements of the Act.

F. Commission Consideration of the Entire Proxy Process

Many commenters believed that NYSE's proposal to amend NYSE Rule 452 should not be viewed in isolation, but should be considered by the Commission as part of a comprehensive review of the proxy voting and shareholder communication system.[132] Certain commenters also raised concerns regarding the efficiency of shareholder communications and the proxy voting process as a whole, as well as the merits of other possible alternatives.[133] Commenters stated that the proposal should be examined in light of current circumstances,[134] such as the rapidly shifting corporate governance environment,[135] and in conjunction with alternatives.[136] Commenters urged the Commission not to take action on the proposal until the Commission completed its comprehensive review.[137] For example, one commenter believed that the implementation of the NYSE's proposal without other changes to the proxy system could have ''unintended and devastating consequences'' in the form of increased costs to public companies to ensure quorum, undue influence of minority shareholders, and the like.[138] Moreover, another commenter noted that the Commission may be considering two proposals that relate to the proxy system: requiring companies to include shareholder-selected nominees in the company's proxy materials and allowing shareholders to vote on executive compensation (''say-on-pay'').[139] This commenter believed that the Commission should consider NYSE's proposal at the same time as these two proposals, because the issues they raise are intertwined.[140]

In contrast, other commenters saw no reason to delay NYSE's proposal until other issues relating to the proxy voting system had been considered, as sufficient time and resources have been spent on the proposal's development, and it is justifiable as a stand-alone initiative.[141]

The Commission has analyzed and reviewed NYSE's proposal in light of the current proxy process, and with full knowledge that a variety of proxy and shareholder communication issues are under review. Given the benefits to investors of the proposal as discussed above, including assuring that voting on matters as critical as the election of directors can no longer be determined by brokers without instructions from the beneficial owner, thereby enhancing corporate governance and accountability, the Commission does

FSBA 2 Letter; Hagberg Letter; Sod'ali Letter; and TIAA–CREF Letter.

[124] *See* CII Letter; CII 2 Letter; CII 4 Letter; Colorado PERA Letter; and TIAA–CREF Letter.

[125] *See* CCGG 2 Letter.

[126] *See* Hagberg Letter.

[127] *See* CalSTRS Letter; CII 4 Letter; Colorado PERA Letter; Sod'ali Letter; and TIAA–CREF Letter.

[128] *See* ABA Fed. Reg. Letter; Alston Letter; CalPERS Letter (recommending proportional voting for those matters requiring a majority or more to pass); Suburban Letter.

[129] For example, of the 11 largest brokerage firms using proportional voting, only five of these firms used only the votes of retail account holders when ''mirroring'' votes for uninstructed retail shares. *See* Broadridge Letter. According to Broadridge, for purposes of its analysis, all uninstructed brokerage shares were voted on the basis of the instructions received from all brokerage account holders, including those of ''professional'' investors. *Id.*

[130] *See* PWG Report, *supra* note 16, at 17–18.

[131] 15 U.S.C. 78(f)(b)(5). The Commission notes that, in this regard, Section 19(b) of the Act requires, among other things, that ''[t]he Commission shall approve a proposed rule change of a self-regulatory organization if it finds that such proposed rule change is consistent with the requirements of this title and the rules and regulations thereunder applicable to such organizations.'' 15 U.S.C. 78s(b)(2).

[132] *See* Alcoa Letter; Alston Letter; Anadarko Letter; Arvin Letter; Avery Letter; BNSF Letter; Boeing Letter; Business Roundtable Letter; CA Letter; Cardinal Letter; Ceridian Letter; Cigna Letter; Cincinnati Financial Letter; Computershare Letter; Continental Letter; Corning Letter; Crescent Letter; CSX Letter; Cummins Letter; DTE Letter; Eaton Letter; Eli Lilly Letter; EV Letter; Exxon Mobil Letter; Fidelity Letter; First American Letter; First Financial Letter; Furniture Brands Letter; GE Letter; General Mills Letter; GM Letter; Gulf Letter; Harman Letter; Helmerich Letter; Honeywell Letter; Illinois Stock Letter; Intel Letter; International Paper Letter; Jacksonville Letter; Johnson Letter; J.P. Morgan Letter; Manifest Letter; Medco Letter; MGE Letter; Monster Letter; NS Letter; Nucor Letter; Office Depot Letter; OTC Letter; Otter Tail Letter; P&G Letter; Peabody Letter; Pfizer Letter; Platinum Letter; Praxair Letter; Provident Letter; Provident Financial Letter; Quest Letter; Realogy Letter; Routh Letter; Ryder Letter; S&C Letter; SCC Letter; Securities Transfer Letter; STA Letter; Standard Letter; StockTrans Letter; Superlattice Letter; Synalloy Letter; Textron Letter; TI Letter; Unitrin Letter; Veeco Letter; Verizon Letter; Washington Banking Letter; Whirlpool Letter; Xcel Letter; Xerox Letter; and YRC Letter.

[133] *See e.g.,* Aetna Letter; Agilent Letter; GE Letter; and McKesson Letter.

[134] *See* NYSBA Sec. Reg. Letter and Wachtell Letter.

[135] *See* Wachtell Letter.

[136] *See* Central Vermont Letter; and Chevron Letter.

[137] *See* Aetna Letter; Agilent Letter; Anadarko Letter; ArvinMeritor Letter; Avery Letter; Avis Letter; BNSF Letter; Boeing Letter; Business Roundtable Letter; CA Letter; Ceridian Letter; Chamber of Commerce 2 Letter; Cigna Letter; Cincinnati Financial Letter; Connecticut Water Letter; Conoco Phillips Letter; Continental Letter; Crescent Letter; CSX Letter; Cummins Letter; DTE Letter; Eaton Letter; Eli Lilly Letter; EV Letter; Exxon Mobil Letter; Fidelity Letter; First American Letter; First Financial Letter; Furniture Brands Letter; GE Letter; General Mills Letter; GM Letter; Gulf Letter; Harman Letter; Helmerich Letter; Honeywell Letter; Illinois Stock Letter; Intel Letter; International Paper Letter; Jacksonville Letter; Johnson Letter; J.P. Morgan Letter; Manifest Letter; Medco Letter; MGE Letter; Monster Letter; NS Letter; Nucor Letter; Office Depot Letter; OTC Letter; Otter Tail Letter; P&G Letter; Peabody Letter; Pfizer Letter; Platinum Letter; Praxair Letter; Provident Letter; Provident Financial Letter; Quest Letter; Realogy Letter; Routh Letter; Ryder Letter; S&C Letter; SCC Letter; Securities Transfer Letter; STA Letter; Standard Letter; StockTrans Letter; Superlattice Letter; Synalloy Letter; Textron Letter; TI Letter; Unitrin Letter; Veeco Letter; Verizon Letter; Washington Banking Letter; Whirlpool Letter; Xcel Letter; Xerox Letter; and YRC Letter.

[138] *See* NIRI Letter (''Some of these consequences include the potential for increased costs to public companies to ensure a quorum is achieved, an increased influence of proxy advisory firms through their voting recommendations, additional power in the hands of the few shareholders who vote, and a magnification of the shareholder communications limitations associated with objecting beneficial owners (OBO) who may be unsure of the meaning of this status and are unable to receive direct corporate communications.'').

[139] *See* Computershare Letter.

[140] *Id.*

[141] *See* Dobkin Letter and Hagberg Letter.

not believe it is appropriate to delay action on the NYSE's proposal pending consideration of the myriad important and difficult issues relating to shareholder director nominations, proxy voting, and shareholder communication, which are outside the scope of NYSE's proposed rule change.[142] The Commission believes that approval of the proposal is warranted pursuant to Section 19(b) of the Act[143] even as it considers broader proxy issues in the near future. We do not believe that action on those issues will undermine the fundamental concept that decisions as significant as the election of the board of directors should be made by those with an economic interest in the company, rather than the brokers who have no such economic interest. Further, as noted earlier, under Section 19(b)(2) of the Act, the Commission must approve the proposal presented by NYSE if it finds the proposed rule change consistent with the Act and applicable rules and regulations thereunder.[144]

G. Exemptions for Registered Investment Companies Under the Investment Company Act of 1940 and Requests for Additional Exemptions

Seven commenters either supported or did not oppose the exemption for registered investment companies.[145] However, some of these commenters, who support the exemption, recommended that it be reconsidered at a later date.[146]

In addition, three commenters requested the exemption also include business development companies (''BDCs'')[147] or smaller issuers, which tend to have a high percentage of retail ownership.[148] Another commenter believed the exemption favored registered investment companies over other issuers that face similar increased proxy solicitation costs and an increased risk of failed elections.[149] Yet another commenter stated that the proposed exemption was over-broad, as it included closed-end funds.[150] That commenter argued that unlike open-end funds, closed-end funds typically have institutional bases, and do not have the same issues establishing quorum at shareholder meetings.[151]

The Commission believes that it is reasonable and consistent with the Act for the Exchange to exempt registered investment companies from the prohibition in NYSE Rule 452 on broker discretionary voting in director elections. NYSE relied on the Proxy Working Group's conclusion that the unique regulatory regime governing registered investment companies differentiated them from operating companies. In recommending the exemption for registered investment companies, the Proxy Working Group considered the heightened problems that registered investment companies face because of their disproportionately large retail shareholder base, that they often do not include other routine matters on the ballot,[152] which would allow a broker vote to count for quorum purposes, and that they are subject to the 1940 Act, which, among other things, also regulates shareholder participation in key decisions. The 1940 Act, for example, requires that a registered investment company obtain the approval of a majority of its voting securities before changing the nature of its business so as to cease to be an investment company, deviating from its concentration policy with respect to investments in any particular industry or group of industries, or changing its subclassification as an open-end company or closed-end company. The Commission believes that the different regulatory regime for registered investment companies supports the exemption, and finds the exemption should, among other things, further the public interest and the protection of investors, consistent with Section 6(b)(5) of the Act.[153]

While the Commission understands the concerns raised by commenters urging NYSE to broaden the exemption, the Commission believes that there are sufficient differences between registered investment companies and other entities to conclude that NYSE's proposal is consistent with the Act.[154] For example, the regulation of BDCs and registered investment companies under the 1940 Act differs significantly. Particularly relevant here, the 1940 Act requires a BDC to seek ratification of the independent auditor, which is a routine item under NYSE Rule 452, at each annual meeting.[155] Adoption of the amendment will therefore have no effect on a BDC's ability to obtain a quorum, and expansion of the exemption for registered investment companies to include BDCs is unnecessary. A registered investment company, however, is exempt from the 1940 Act's auditor ratification requirement if it relies on a conditional exemptive rule under the 1940 Act.[156] That exemptive rule is not available to BDCs.

The Commission finds it reasonable for the NYSE to distinguish between registered investment companies and smaller issuers that may have a large retail shareholder base for purposes of allowing broker discretionary voting on director elections. While the Commission recognizes that small issuers could face similar concerns as registered investment companies as a result of the proposed changes to Rule 452, there are significant differences between small issuers and registered investment companies. For example, as noted by the Proxy Working Group, ''the unique regulatory regime governing investment companies made such companies sufficiently different from

[142] *See* Securities Act Release No. 9046 (June 10, 2009) (File No. S7–10–09).

[143] 15 U.S.C. 78s(b). *See also supra* note 131.

[144] *See* 15 U.S.C. 78s(b)(2); *see also supra* note 131.

[145] *See* Altman Letter; CalPERS Letter; CFA 2 Letter; CII Letter; FSBA Letter; FSBA 2 Letter; ICI 4 Letter (supporting amended proposal); and Sutherland Letter.

[146] *See* CalPERS Letter (''CalPERS is not opposed to exempting investment companies from this proposed rule change in the short term''); CII Letter (''Given the corporate governance concerns surrounding mutual funds, we believe the proposed change should also apply to investment companies at some point in the not-too-distant future.''); FSBA Letter (proposed exemption for investment companies ''poses no problem, but this should be re-evaluated at some point''); and FSBA 2 Letter (proposed exemption ''is currently warranted, but this should be re-evaluated in the future'').

[147] *See* ICI 4 Letter and Sutherland Letter.

[148] *See* Altman Letter (requesting an exemption for issuers with similar circumstances to those of investment companies, such as those ''with a high percentage of retail ownership and burdensome cost concerns''); *see also* Suburban Letter (requesting an exemption for Master Limited Partnerships because of the ''disparate impact that such amendment would have on MLPs'').

However, one commenter did not support approval of NYSE's proposal under any circumstances and questioned NYSE's rationale for letting ''investment companies off the hook.'' *See* ABC 2 Letter (stating that it ''does not support an expansion of the 'carve out' to include smaller public companies. By and large, we believe that 'carve outs' are bad public policy.''); *see also* ABC 3 Letter (stating opposition to NYSE's proposal). This commenter noted that ''the predicament of small and midsize public companies is identical to that of small and midsize investment companies * * *. It is hard to see, on the merits, why the NYSE provides relief to one group and not to the other.'' *See* ABC 2 Letter.

[149] *See* Alcoa Letter.

[150] *See* City of London Letter. The commenter noted that closed-end funds typically trade at a discount to net asset value, and suggested that investors in closed-end funds do not view themselves as having the option of ''voting with [their] feet.'' *Id.*

[151] *Id. But see* ICI 2 Letter, which states that retail investors own ninety-eight percent of the value of closed-end funds. *See also* further discussion below on the basis for exempting registered investment companies under the 1940 Act from the NYSE's proposal.

[152] *See* Rule 32a–4 under the 1940 Act, 17 CFR 270.32a–4, and *infra* note 156 and accompanying text.

[153] 15 U.S.C. 78f(b)(5).

[154] *See* Altman Group Letter; ICI 4 Letter; and Sutherland Letter.

[155] *See* 15 U.S.C. 80a–31(a) and 15 U.S.C. 80a–59. *See* 17 CFR 270.32a–4.

[156] Rule 32a–4 under the 1940 Act. *See* 17 CFR 270.32a–4.

operating companies (regardless of size) that it was appropriate to treat such companies differently.'' [157] Further, operating companies frequently place an item that permits broker discretionary voting, such as the ratification of independent auditors, on the ballot, which will help them obtain quorum.[158] In contrast, pursuant to NYSE Rule 452, for registered investment companies, only the election of directors would qualify as a routine matter on their ballot for purposes of establishing quorum.

Because of these differences, the Commission believes that it is reasonable for the NYSE to distinguish between registered investment companies and other entities in defining the scope of the exemption, and therefore, believes the proposal is consistent with the requirements of Section 6(b)(5) of the Act, which, among other things, requires that the rules of an exchange be designed to protect investors and the public interest and are not designed to permit unfair discrimination between customers, issuers, brokers, or dealers.

H. Implementation Date

The NYSE's proposal to eliminate broker discretionary voting for the election of directors would apply to shareholder meetings held on or after January 1, 2010, except to the extent that a meeting was originally scheduled to be held prior to that date but was properly adjourned to a date on or after it.[159] The Commission received several comments relating to the NYSE's proposed implementation date. One commenter recommended that, if the Commission approved the proposal, it should initially make the proposal applicable only to large accelerated filers, so as to not ''unfairly burden smaller public companies and to provide time to observe the effect of the proposed amendments in operation.'' [160] However, other commenters recommended that the proposed rule change be implemented earlier.[161]

The Commission believes that the NYSE's proposed implementation date is reasonable and consistent with the Act. The Commission believes that it is reasonable for the NYSE to implement the proposed rule to apply to all affected issuers at the same time because the NYSE appears to have provided sufficient time for these issuers to adjust to the proposed rule change. The Commission also believes that it is reasonable for the NYSE to delay the effective date of the proposed rule to shareholder meetings held on or after January 1, 2010. The Commission recognizes that, given the significance of the NYSE's proposed rule change, issuers may need additional time to prepare their proxy materials and inform investors of the changes resulting from the NYSE's proposal. Accordingly, the Commission believes that the NYSE's proposal to apply the proposed rule change to shareholder meetings held on or after January 1, 2010 is consistent with the Act.

I. Prior Interpretations to Rule 452

The Exchange proposes amending NYSE Rule 452 to codify two previously published interpretations, which were filed with the Commission pursuant to Section 19(b)(2) of the Act.[162] First, the NYSE proposes codifying that NYSE Rule 452 would preclude broker discretionary voting on a matter that materially amends an investment advisory contract with an investment company. Second, the NYSE proposes codifying that a material amendment to an investment advisory contract would include any proposal to obtain shareholder approval of an investment company's investment advisory contract with a new investment adviser, which approval is required by the 1940 Act and the rules thereunder.

The Commission received two comment letters on NYSE's codification of its prior interpretations.[163] Both commenters supported this proposal.[164] For example, ICI stated that ''[w]e agree that these matters are the types of non-routine matters on which investment company shareholders should be required to vote * * *. When investors become shareholders of an investment company, they already have chosen the adviser in the context of the disclosures in the investment company's prospectus and other documents * * *. Given the importance of the identity of the adviser and the services it provides to investment company shareholders, we believe the benefits of shareholders' voting on material amendment to an advisory contract or an advisory contract with a new investment adviser outweigh the costs associated with such a requirement.'' [165]

The Commission believes that the NYSE's codification of previously published interpretations is consistent with the Act and the rules and regulations thereunder. As the Commission has previously stated, ''[f]ull and effective voting rights of investment company shareholders are an important aspect of the investment company structure.'' [166] The Commission believes that the NYSE, by codifying its prior interpretations to Rule 452, is providing greater transparency and ensuring the consistent application of its interpretations. Further, the proposed amendments codify existing NYSE interpretations, which were the subject of two prior rule filings.[167] Accordingly, these changes raise no new regulatory issues, and are consistent with the Act.

J. Conclusion

The Commission finds, for the reasons set forth above, that the Exchange's proposal, as modified by Amendment No. 4, is consistent with the requirements of the Act. In particular, the Commission finds that the proposed rule change is consistent with the requirements of Section 6(b)(5) of the Act,[168] which provides that the rules of the exchange must be designed to protect investors and the public interest, and are not designed to permit unfair discrimination between customers, issuers, brokers, or dealers.

The Commission believes that it is reasonable and consistent with the Act for the NYSE to determine that the election of directors should no longer be

[157] *See* Addendum, *supra* note 21, at 3.

[158] *See supra* Section IV.A, Increased Costs for Companies to Achieve Quorum.

[159] NYSE also stated that in the event the proposal is not approved by the Commission on or before August 31, 2009, NYSE would delay the effective date to a date which is at least four months after the approval date, and which does not fall within the first six months of the calendar year. *See* Notice, *supra* note 4.

[160] *See* ABA Fed. Reg. Letter.

[161] *See* AFSCME Letter (recommending immediate implementation); CII 4 Letter (recommending immediate implementation); Colorado PERA Letter (requesting that the proposal become effective upon final approval); FSBA 2 Letter (recommending that the proposal be implemented earlier than 2010); Hermes Equity Letter (requesting that the Commission ''allow the amendment to take effect as soon as possible''); OPERS Letter (recommending that the proposal be implemented earlier than 2010); and Sod'ali Letter (recommending that the proposal be immediately effective).

[162] *See* Securities Exchange Act Release Nos. 30697, *supra* note 3 (interpreting Rule 452 to allow members organizations to give a proxy on the initial approval of an investment advisory contract if the beneficial holder does not exercise his right to vote, but precluding members organizations from giving proxies on material amendments to the investment advisory contracts without specific client instructions) and 52569, *supra* note 3 (interpreting Rule 452 to preclude member organizations from giving proxies on any proposal to obtain shareholder approval of an investment company's investment advisory contract with a new investment adviser, which approval is required by the 1940 Act, without specific beneficial owners' voting instructions).

[163] *See* CFA 2 Letter and ICI 4 Letter.

[164] *Id.*

[165] *See* ICI 4 Letter.

[166] *See* Release No. 30697, *supra* note 3.

[167] *See supra* note 3.

[168] 15 U.S.C. 78f(b)(5).

an item eligible for broker discretionary voting. As noted above, the most fundamental way for shareholders to hold directors accountable for their performance of critical corporate duties is through the director election process. Given the large proportion of shares that today are held in street name, the importance of corporate governance matters, and the concern that the broker vote can distort election results, the Commission believes it is appropriate for the NYSE to eliminate broker discretionary voting in director elections.[169] In making this determination, the Commission believes that the NYSE's proposal, among other things, furthers the protection of investors and the public interest by assuring that voting on matters as critical as the election of directors can no longer be determined by brokers without instructions from the beneficial owner, and thus should enhance corporate governance and accountability to shareholders.

The Commission also believes that the NYSE's proposed change codifying prior NYSE interpretations of NYSE Rule 452 is consistent with the requirements of the Act. These proposed amendments help to ensure the full and effective voting rights of investment company shareholders on material matters, and further, codify existing NYSE interpretations.

V. Conclusion

It is therefore ordered, that pursuant to Section 19(b)(2) of the Act,[170] the proposed rule change, as modified by Amendment No. 4, is hereby approved.

By the Commission.

Elizabeth M. Murphy,

Secretary.

Appendix A

List of comment letters received:

Letter from Keith F. Higgins, Chair, Committee on Federal Regulation of Securities, American Bar Association, dated April 3, 2009 (''ABA Fed. Reg. Letter''); John Endean, President, American Business Conference, dated January 16, 2007 (''ABC Letter''); John Endean, President, American Business Conference, dated June 25, 2007 (''ABC 2 Letter''); John Endean, President, American Business Conference, dated March 31, 2009 (''ABC 3 Letter''); Judith H. Jones, Vice President and Corporate Secretary, Aetna Inc., dated March 26, 2009 (''Aetna Letter''); Charles Jurgonis, Plan Secretary, American Federation of State, County and Municipal Employees, AFL–CIO, dated March 26, 2009 (''AFSCME Letter''); D. Craig Nordlund, Senior Vice President, General Counsel and Secretary, Agilent Technologies, Inc., dated March 24, 2009 (''Agilent Letter''); Donna Dabney, Vice-President, Secretary, and Corporate Governance Counsel, Alcoa, Inc., dated March 24, 2009 (''Alcoa Letter''); David E. Brown, Mark F. McElreath, Justin R. Howard, and William S. Ortwein, Alston & Bird LLP, dated April 1, 2009 (''Alston Letter''); Kenneth L. Altman, President, The Altman Group, Inc., dated March 27, 2009 (''Altman Letter''); Stephen P. Norman, Secretary, American Express Company, dated March 27, 2009 (''AmEx Letter''); David L. Siddall, Vice President, Deputy General Counsel and Corporate Secretary, Anadarko Petroleum Corporation, dated March 25, 2009 (''Anadarko Letter''); Charles G. McClure, Chairman, Chief Executive Officer and President, ArvinMeritor, Inc., dated March 17, 2009 (''ArvinMeritor Letter''); Peter M. Finn, First Vice President, Regulatory Affairs, Astoria Financial Corporation, dated March 25, 2009 (''Astoria Financial Letter''); Dean A. Scarborough, President and Chief Executive Officer, Avery Dennison, dated March 16, 2009 (''Avery Letter''); Ronald L. Nelson, Chairman and Chief Executive Officer, Avis Budget Group, Inc., dated March 23, 2009 (''Avis Letter''); Frances B. Jones, Executive Vice President, Secretary, General Counsel and Chief Corporate Governance Officer, BB&T Corporation, dated March 26, 2009 (''BB&T Letter''); Doug Pearce, Chief Executive Officer and Chief Investment Officer, British Columbia Investment Management Corporation, dated March 31, 2009 (''BCIMC Letter''); Matthew K. Rose, Chairman, President and Chief Executive Officer, Burlington Northern Santa Fe Corporation, dated March 27, 2009 (''BNSF Letter''); Robert Schifellite, President, Investor Communication Solutions, Broadridge Financial Solutions, Inc., dated March 27, 2009 (''Broadridge Letter''); W. James McNerney, Jr., Chairman of the Board, President and Chief Executive Officer, The Boeing Company, dated March 26, 2009 (''Boeing Letter''); Anne M. Mulcahy, Chair, Corporate Leadership Initiative, Business Roundtable, dated March 25, 2009 (Business Roundtable Letter''); Clifford DuPree, Vice President, Corporate Governance and Corporate Secretary, CA, Inc., dated March 27, 2009 (''CA Letter''); Peter H. Mixon, General Counsel, CalPERS, dated June 25, 2007 (''CalPERS Letter''); Peter H. Mixon, General Counsel, CalPERS, dated October 26, 2007 (''CalPERS 2 Letter''); Dennis A. Johnson, Senior Portfolio Manager, CalPERS Corporate Governance, dated April 29, 2008 (''CalPERS 3 Letter''); Anne Sheehan, Director, Corporate Governance, California State Teacher's Retirement System, dated March 27, 2009 (''CalSTRS Letter''); Sally J. Curley, Senior Vice President, Cardinal Health, Inc., dated March 30, 2009 (''Cardinal Letter''); Doug Pearce, Chairman, Canadian Coalition for Good Governance, dated January 19, 2009 (''CCGG Letter''); Stephen Griggs, Executive Director, Canadian Coalition for Good Governance, dated March 27, 2009 (''CCGG 2 Letter''); Dale A. Rocheleau, Senior Vice President, General Counsel and Corporate Secretary, Central Vermont Public Service Corporation, dated March 27, 2009 (''Central Vermont Letter''); Kathryn V. Marinello, Chairman and Chief Executive Officer; Ceridian Corporation, dated March 25, 2009 (''Ceridian Letter''); Kurt N. Schacht, Executive Director, CFA Institute Centre for Financial Market Integrity, dated March 31, 2008 (''CFA Letter''); Kurt N. Schacht, Managing Director, and James C. Allen, Director, CFA Institute Centre for Financial Market Integrity, dated March 27, 2009 (''CFA 2 Letter''); David Chavern, Senior Vice President and Chief Legal Officer, Chamber of Commerce of the United States of America, dated November 13, 2006 (''Chamber of Commerce Letter''); David T. Hirshmann, President and Chief Executive Officer, Center for Capital Markets Competitiveness, United States Chamber of Commerce, dated March 27, 2009 (''Chamber of Commerce 2 Letter''); Lydia I. Beebe, Corporate Secretary and Chief Governance Officer, Chevron, dated March 27, 2009 (''Chevron Letter''); H. Edward Hanway, Chairman and Chief Executive Officer, Cigna Corporation, dated March 26, 2009 (''Cigna Letter''); Ann Yerger, Executive Director, Council of Institutional Investors, dated June 5, 2007 (''CII Letter''); Amy Borrus, Deputy Director, Council of Institutional Investors, dated November 5, 2007 (''CII 2 Letter''); Ann Yerger, Executive Director, Council of Institutional Investors, dated April 17, 2008 (''CII 3 Letter''); Jonathan D. Urick, Research Analyst, Council of Institutional Investors, dated March 19, 2009 (''CII 4 Letter''); Steven J. Johnston, Chief Financial Officer, Secretary and Treasurer, Cincinnati Financial Corporation, dated March 25, 2009 (''Cincinnati Financial Letter''); Barry M. Olliff, Chief Investment Officer, City of London Investment Company Limited, dated March 27, 2009 (''City of London Letter'') (also requesting that the proposal not exempt closed-end funds registered under the Investment Company Act of 1940); Gregory W. Smith, General Counsel, Colorado Public Employees' Retirement Association, dated March 26, 2009 (''Colorado PERA Letter''); Paul Conn, President, Global Capital Markets, Computershare Limited, and David Drake, President, Georgeson Inc., dated March 27, 2009 (''Computershare Letter''); Daniel J. Meaney, Corporate Secretary, Connecticut Water Company, dated March 25, 2009 (''Connecticut Water Letter''); J.J. Mulva, Chairman and Chief Executive Officer, ConocoPhillips, dated March 26, 2009 (''ConocoPhillips Letter''); Steven G. Nelson, President and Chairman of the Board, Continental Stock Transfer and Trust Company, dated March 24, 2009 (''Continental Letter''); James B. Flaws, Vice Chairman and Chief Financial Officer, Corning Incorporated, dated March 24, 2009 (''Corning Letter''); James McRitchie, Publisher, Corporate Governance, dated March 13, 2009 (''Corporate Governance Letter''); Marc Cox, dated April 26, 2009 (''Cox Letter''); Barbara Trivedi, Shareholder Services Manager, Crescent Banking Company, dated March 25, 2009 (''Crescent Letter''); Ellen M. Fitzsimmons, Senior Vice President—Law and Public Affairs and General Counsel, CSX Corporation, dated March 18, 2009 (''CSX Letter''); William B. Patterson, Executive Director, CtW

[169] As discussed above, NYSE does not propose to eliminate broker discretionary voting for registered investment companies under the 1940 Act.

[170] 15 U.S.C. 78s(b)(2).

Investment Group, dated June 6, 2007 (''CtW Letter''); William B. Patterson, Executive Director, CtW Investment Group, dated April 17, 2008 (''CtW 2 Letter''); Tim Solso, Chairman and Chief Executive Officer, Cummins Inc., dated March 25, 2009 (''Cummins Letter''); David M. Dobkin, dated March 27, 2009 (''Dobkin Letter''); Patrick B. Carey, Associate General Counsel & Assistant Corporate Secretary, DTE Energy, dated March 27, 2009 (''DTE Letter''); Alexander M. Cutler, Chairman and Chief Executive Officer, Eaton Corporation, dated March 13, 2009 (''Eaton Letter''); Bronwen L Mantlo, Associate General Counsel and Assistant Secretary, dated March 26, 2009 (''Eli Lilly Letter''); Holly Roseberry, President, EV Innovations, Inc., dated March 25, 2009 (''EV Letter''); David S. Rosenthal, Vice President, Investor Relations and Secretary, Exxon Mobil Corporation, dated March 27, 2009 (''Exxon Mobil Letter''); Christine P. Richards, Executive Vice President, General Counsel and Secretary, FedEx Corporation, dated March 26, 2009 (''FedEx Letter''); Kevin Kopaunik, President, Fidelity Transfer Company, dated March 24, 2009 (''Fidelity Letter''); Salli Marinov, President and Chief Executive Officer, First American Stock Transfer, Inc., dated March 24, 2009 (''First American Letter''); Dorothy B. Wright, Vice President and Corporate Secretary, First Financial Holdings, Inc., dated March 24, 2009 (''First Financial Letter''); Alissa E. Ballot, Vice President and Corporate Secretary, FPL Group, Inc., dated March 23, 2009 (''FPL Letter''); Michael McCauley, Director, Office of Corporate Governance, State Board of Administration of Florida, dated June 13, 2007 (''FSBA Letter''); Ashbel C. Williams, Executive Director and Chief Executive Officer, State Board of Administration of Florida, dated March 27, 2009 (''FSBA 2 Letter''); Jon D. Botsford, Senior Vice President, General Counsel and Secretary, Furniture Brands International, dated March 23, 2009 (''Furniture Brands Letter''); Michael R. McAlevey, Vice President and Chief Corporate, Securities and Finance Counsel, General Electric Company, dated April 13, 2009 (''GE Letter''); Roderick A. Palmore, Executive Vice President, General Counsel and Chief Compliance and Risk Management Officer, General Mills, dated March 17, 2009 (''General Mills Letter''); Robert McCormick, Chief Policy Officer, Glass Lewis & Co., dated March 13, 2009 (''Glass Lewis Letter''); G. Richard Wagoner, Jr., Chairman and Chief Executive Officer, General Motors Corporation, dated March 27, 2009 (''GM Letter''); Brian Connolly, Director of Sales, GovernanceMetrics International (''GovernanceMetrics Letter''); Neila B. Radin, Chair, Securities Law Committee, The Society of Corporate Secretaries and Governance Professionals, dated March 20, 2009 (''Governance Professionals Letter''); Steven Gratzer, dated April 27, 2009 (''Gratzer Letter''); William A. Little III, President, Gulf Registrar and Transfer Corporation, dated March 24, 2009 (''Gulf Letter''); Carl T. Hagberg, Chairman and CEO, Carl T. Hagberg and Associates, dated March 27, 2009 (''Hagberg Letter''); Dinesh C. Paliwal, Chairman and Chief Executive Officer, Harman International, dated March 26, 2009 (''Harman Letter''); Steven R. Mackey, Executive Vice President, Secretary and General Counsel, Helmerich & Payne, Inc., dated March 24, 2009 (''Helmerich Letter''); Bess Joffe, Associate Director, Hermes Equity Ownership Services Limited, dated March 20, 2009 (''Hermes Equity Letter''); Thomas F. Larkins, Vice President, Corporate Secretary and General Counsel, Honeywell, dated March 27, 2009 (''Honeywell Letter''); Paul Schott Stevens, President, Investment Company Institute, dated November 20, 2006 (''ICI Letter''); Paul Schott Stevens, President, Investment Company Institute, dated December 18, 2006 (''ICI 2 Letter''); Paul Schott Stevens, President, Investment Company Institute, dated February 20, 2007 (''ICI 3 Letter''); Karrie McMillian, General Counsel, Investment Company Institute, dated March 27, 2009 (''ICI 4 Letter'') (supporting the proposal, as amended to exempt investment companies); Robert G. Pearson, President and Chief Executive Officer, Illinois Stock Transfer Company, dated March 24, 2009 (''Illinois Stock Letter''); Maura Abelin Smith, Senior Vice President, General Counsel and Corporate Secretary, International Paper Company, dated March 24, 2009 (''International Paper Letter''); Cary Klafter, Vice President, Legal and Corporate Affairs, Intel Corporation, dated March 26, 2009 (''Intel Letter''); Gilbert J. Pomar, III, President and Chief Executive Officer, and Valerie A. Kendall, EVP and Chief Financial Officer, Jacksonville Bancorp Inc., dated March 26, 2009 (''Jacksonville Letter''); Stephen A. Roell, Chairman and Chief Executive Officer, Johnson Controls, Inc., dated March 25, 2009 (''Johnson Letter''); Anthony J. Horan, Corporate Secretary, J.P.Morgan Chase & Co., dated March 27, 2009 (''J.P. Morgan Letter''); Sarah Wilson, Chief Executive, Manifest, dated March 27, 2009 (''Manifest Letter''); McKesson Corporation, dated March 27, 2009 (''McKesson Letter''); Thomas M. Moriaty, General Counsel, Secretary and SVP, Medco Health Solutions, Inc., dated March 26, 2009 (''Medco Letter''); Kenneth G. Frassetto, Director—Treasury Management and Shareholder Services, MGE Energy, Inc., dated March 26, 2009 (''MGE Letter''); Michael C. Miller, Executive Vice President, General Counsel and Secretary, Monster Worldwide, Inc., dated March 24, 2009 (''Monster Letter''); Larry S. Dohrs, Vice President, Newground Social Investment, dated March 27, 2009 (''Newground Letter''); Jeffrey D. Morgan, CAE, President & CEO, National Investor Relations Institute, dated March 16, 2009 (''NIRI Letter''); C.W. Moorman, Chairman, President and Chief Executive Officer, Norfolk Southern Corporation, dated March 23, 2009 (''NS Letter''); Daniel R. DiMicco, Chairman, President and Chief Executive Officer, Nucor Corporation, dated March 25, 2009 (''Nucor Letter''); Jeffrey W. Rubin, Chair, Business Law Section, Committee on Securities Regulation, New York State Bar Association, dated March 27, 2009 (''NYSBA Sec. Reg. Letter''); Elisa D. Garcia, Executive Vice President and General Counsel, Office Depot, Inc., dated March 24, 2009 (''Office Depot Letter''); Chris DeRose, Chief Executive Officer, Ohio Public Employees Retirement System, dated March 24, 2009 (''OPERS Letter''); Toni Zaks, President, OTC Corporate Transfer Service, dated March 24, 2009 (''OTC Letter''); Loren K. Hanson, Assistant Secretary, Otter Tail Corporation, dated March 24, 2009 (''Otter Tail Letter''); E. J. Wunsch, Assistant Secretary and Associate General Counsel, The Procter & Gamble Company, dated March 27, 2009 (''P&G Letter''); Alexander C. Schoch, Executive Vice President, Chief Legal Officer and Secretary, Peabody Energy, dated March 17, 2009 (''Peabody Letter''); Matthew Lepore, Vice President, Chief President-Corporate Governance, Pfizer, dated March 27, 2009 (''Pfizer Letter''); Laura J. Cataldo, President and Chief Executive Officer, Platinum Stock Transfer, dated March 24, 2009 (''Platinum Letter''); James T. Breedlove, Senior Vice President, General Counsel and Secretary, Praxair, dated March 27, 2009 (''Praxair Letter''); Daniel Rothstein, Executive Vice President, Provident Bank, dated March 27, 2009 (''Provident Letter''); John F. Kuntz, General Counsel and Corporate Secretary, Provident Financial Services, Inc. (''Provident Financial Letter''); Larry W. Sonsini, Chairman, Proxy Working Group, dated March 25, 2009 (''PWG Letter''); William J. O'Shaughnessy, Jr., Assistant General Counsel and Corporate Secretary, Quest Diagnostics Incorporated, dated March 25, 2009 (''Quest Letter''); Frank Curtiss, Head of Corporate Governance, Railways Pension Trustee Company Limited, dated April 15, 2009 (''Railpen Letter''); Marilyn Wasser, Executive Vice President and General Counsel, Realogy Corporation, dated April 2, 2009 (''Realogy Letter''); Ralph V. Whitworth, Principal, Relational Investors LLC, dated March 12, 2009 (''Relational Investors Letter''); Jason Freeman, President, Routh Stock Transfer, Inc., dated March 24, 2009 (''Routh Letter''); Karen Gross, Vice President and Secretary, Royal Gold, Inc., dated March 23, 2009 (''Royal Gold Letter''); Robert D. Fatovic, Executive Vice President, Chief Legal Officer and Corporate Secretary, Ryder, dated March 26, 2009 (''Ryder Letter''); Sullivan & Cromwell LLP, dated March 27, 2009 (''S&C Letter''); Niels Holch, Executive Director, Shareholder Communications Coalition, dated March 27, 2009 (''SCC Letter''); Niels Holch, Executive Director, Shareholder Communications Coalition, dated April 24, 2009 (''SCC 2 Letter''); R. Scott McMillen, Vice President and Associate General Counsel, The Charles Schwab Corporation, dated March 27, 2009 (''Schwab Letter''); George Johnson, Vice President, Securities Transfer Corporation, dated March 24, 2009 (''Securities Transfer Letter''); Thomas F. Price, Managing Director, Securities Industry and Financial Markets Association (''SIFMA Letter'') (noting that some of the assertions made by other commenters were ''inaccurate and promote confusion,'' and presenting its own observations on those issues); John C. Wilcox, Chairman, Sod'ali, dated March 27, 2009 (''Sod'ali Letter''); Charles V. Rossi, President, The Securities Transfer Association, Inc., dated March 27, 2009 (''STA Letter''); Mary Cleo Fernandez,

Transfer Agent, Standard Registrar Transfer Agency, Inc., dated March 24, 2009 (''Standard Letter''); Robert M. Stanton, dated March 25, 2009 (''Stanton Letter''); Jonathan Miller, President, StockTrans, Inc., dated March 24, 2009 (''StockTrans Letter''); Paul Abel, General Counsel and Secretary, Suburban Propane Partners, L.P., dated November 16, 2006 (''Suburban Letter'') (resubmitted on March 3, 2009); Douglas Ian Shaw, Senior Vice President and Corporate Secretary, Suffolk County National Bank, Suffolk Bancorp, dated March 13, 2009 (''Suffolk Letter''); Holly Roseberry, Director, Superlattice Power, Inc., dated March 25, 2009 (''Superlattice Letter''); Steven B. Boehm and Cynthia M. Krus, Sutherland Asbill and Brennan LLP, dated March 31, 2009 (''Sutherland Letter''); Cheryl C. Carter, Corporate Secretary, Synalloy Corporation, dated March 25, 2009 (''Synalloy Letter''); Lewis B. Campbell, Chairman and Chief Executive Officer, Textron Inc., dated March 30, 2009 (''Textron Letter''); Cynthia H. Haynes, Vice President, Assistant Secretary and Assistant General Counsel, Texas Instruments Incorporated, dated March 26, 2009 (''TI Letter''); Hye-Won Choi, Senior Vice President and Head of Corporate Governance, TIAA–CREF, dated March 27, 2009 (''TIAA–CREF Letter''); Jonas Kron, Senior Social Research Analyst, Trillium Asset Management, dated March 17, 2009 (''Trillium Letter''); Scott Renwick, Senior Vice President and General Counsel, Unitrin, dated March 27, 2009 (''Unitrin Letter''); Donald A. French, Treasurer, UQM Technologies, Inc., dated March 26, 2009 (''UQM Letter''); Gregory A. Robbins, Senior Vice President and General Counsel, Veeco Instruments Inc., dated March 26, 2009 (''Veeco Letter''); Marianne Drost, Senior Vice President, Deputy General Counsel and Corporate Secretary, Verizon Communications Inc., dated March 27, 2009 (''Verizon Letter''); David A. Katz, Wachtell, Lipton, Rosen & Katz, dated March 26, 2009 (''Wachtell Letter''); Shelly L. Angus, Senior Vice President, Investor Relations, Washington Banking Company, dated March 23, 2009 (''Washington Banking Letter''); Robert J. LaForest, Vice President and Associate General Counsel, Whirlpool Corporation, dated March 26, 2009 (''Whirlpool Letter''); Michael C. Connelly, Vice President and General Counsel, Xcel Energy, dated March 27, 2009 (''Xcel Letter''); Anne M. Mulcahy, Chairman and Chief Executive Officer, Xerox Corporation, dated March 25, 2009 (''Xerox Letter''); and William D. Zollars, Chairman of the Board, President and Chief Executive Officer, and YRC Worldwide Inc., dated March 25, 2009 (''YRC Letter'').

[FR Doc. E9–16318 Filed 7–9–09; 8:45 am]

BILLING CODE 8010–01–P

SECURITIES AND EXCHANGE COMMISSION

[Release No. 34–60234; File No. SR–NSCC–2009–04]

Self-Regulatory Organizations; National Securities Clearing Corporation; Notice of Filing and Immediate Effectiveness of Proposed Rule Change Relating to Addendum O

July 2, 2009.

Pursuant to Section 19(b)(1) of the Securities Exchange Act of 1934 (''Act''),[1] notice is hereby given that on June 19, 2009, the National Securities Clearing Corporation (''NSCC'') filed with the Securities and Exchange Commission (''Commission'') the proposed rule change as described in Items I, II, and III below, which Items have been prepared primarily by NSCC. NSCC filed the proposed rule change pursuant to Section 19(b)(3)(A)(iii) of the Act[2] and Rule 19b–4(f)(4) thereunder[3] so that the proposal was effective upon filing with the Commission. The Commission is publishing this notice to solicit comments on the proposed rule change from interested persons.

I. Self-Regulatory Organization's Statement of the Terms of Substance of the Proposed Rule Change

The proposed rule change amends Addendum O to NSCC's rules to correct Footnote 1 to make the footnote consistent with recently filed and effective changes to Addendum O.

II. Self-Regulatory Organization's Statement of the Purpose of, and Statutory Basis for, the Proposed Rule Change

In its filing with the Commission, NSCC included statements concerning the purpose of and basis for the proposed rule change and discussed any comments it received on the proposed rule change. The text of these statements may be examined at the places specified in Item IV below. NSCC has prepared summaries, set forth in sections A, B, and C below, of the most significant aspects of such statements.

A. Self-Regulatory Organization's Statement of the Purpose of, and Statutory Basis for, the Proposed Rule Change

The proposed rule change amends Footnote 1 of Addendum O (''Admission of Non-US Entities as Direct NSCC Members'') to NSCC's rules. The new footnote will state that Addendum O is not applicable to non-U.S. insurance companies.

NSCC inadvertently failed to update Footnote 1 when it amended Addendum O earlier this year to permit non-U.S. entities to apply to be Mutual Fund/Insurance Services Members, Fund Members, and Insurance Carrier/Retirement Services Members.[4] Those changes had the effect of making Addendum O inapplicable only to non-U.S. insurance companies since NSCC did not establish membership standards for non-U.S. insurance companies. This current rule change updates Footnote 1.

NSCC states that the proposed rule change is consistent with the requirements of Section 17A of the Act[5] and the rules and regulations promulgated thereunder by making technical corrections to NSCC's rules for internal consistency.

B. Self-Regulatory Organization's Statement on Burden on Competition

NSCC does not believe that the proposed rule change will have any impact or impose any burden on competition.

C. Self-Regulatory Organization's Statement on Comments on the Proposed Rule Change Received From Members, Participants, or Others

NSCC has not solicited or received written comments relating to the proposed rule change. NSCC will notify the Commission of any written comments it receives.

III. Date of Effectiveness of the Proposed Rule Change and Timing for Commission Action

The foregoing rule change has become effective pursuant to Section 19(b)(3)(A)(iii) of the Act[6] and Rule 19b–4(f)(4)[7] thereunder because it effects a change in an existing service of a registered clearing agency that does not adversely affect the safeguarding of securities and funds in the custody or control of the clearing agency or for which it is responsible and does not significantly affect the respective rights or obligations of the clearing agency or persons using the service. At any time within 60 days of the filing of the proposed rule change, the Commission may summarily abrogate such rule change if it appears to the Commission that such action is necessary or appropriate in the public interest, for the protection of investors, or otherwise

[1] 15 U.S.C. 78s(b)(1).

[2] 15 U.S.C. 78s(b)(3)(A)(iii).

[3] 17 CFR 240.19b–4(f)(4).

[4] Securities Exchange Act Release No. 59413 (Feb. 18, 2009), 74 FR 8298 (Feb. 24, 2009).

[5] 15 U.S.C. 78q–1.

[6] 15 U.S.C. 78s(b)(3)(A)(ii).

[7] 17 CFR 240.19b–4(f)(2).

in furtherance of the purposes of the Act.

IV. Solicitation of Comments

Interested persons are invited to submit written data, views, and arguments concerning the foregoing, including whether the proposed rule change is consistent with the Act. Comments may be submitted by any of the following methods:

Electronic Comments

- Use the Commission's Internet comment form (*http://www.sec.gov/rules/sro.shtml*) or
- Send an e-mail to *rule-comment@sec.gov*. Please include File No. SR–NSCC–2009–04 on the subject line.

Paper Comments

- Send paper comments in triplicate to Elizabeth M. Murphy, Secretary, Securities and Exchange Commission, 100 F Street, NE., Washington, DC 20549–1090.

All submissions should refer to File No. SR–NSCC–2009–04. This file number should be included on the subject line if e-mail is used. To help the Commission process and review your comments more efficiently, please use only one method. The Commission will post all comments on the Commission's Internet Web site (*http://www.sec.gov/rules/sro.shtml*). Copies of the submission, all subsequent amendments, all written statements with respect to the proposed rule change that are filed with the Commission, and all written communications relating to the proposed rule change between the Commission and any person, other than those that may be withheld from the public in accordance with the provisions of 5 U.S.C 552, will be available for inspection and copying in the Commission's Public Reference Room, 100 F Street, NE., Washington, DC 20549, on official business days between the hours of 10 a.m. to 3 p.m. Copies of such filing also will be available for inspection and copying at NSCC's principal office and on NSCC's Web site at *http://www.nscc.com/legal/index.html*. All comments received will be posted without change; the Commission does not edit personal identifying information from submissions. You should submit only information that you wish to make available publicly. All submissions should refer to File No. SR–NSCC–2009–04 and should be submitted on or before July 31, 2009.

For the Commission by the Division of Trading and Markets, pursuant to delegated authority.[8]

Elizabeth M. Murphy,

Secretary.

[FR Doc. E9–16355 Filed 7–9–09; 8:45 am]

BILLING CODE 8010–01–P

SECURITIES AND EXCHANGE COMMISSION

[Release No. 34–60198; File No. SR–BX–2009–034]

Self-Regulatory Organizations; NASDAQ OMX BX, Inc.; Notice of Filing and Order Granting Accelerated Approval of Proposed Rule Change to Amend the Fee Schedule of the Boston Options Exchange Facility

Correction

In notice document E9–16036 beginning on page 32212 in the issue of Tuesday, July 7, 2009, make the following correction:

On page 32213, in the third column, in the 17th line from the top, ''July 29, 2009'' should read ''July 28, 2009''.

[FR Doc. Z9–16036 Filed 7–9–09; 8:45 am]

BILLING CODE 1505–01–D

SECURITIES AND EXCHANGE COMMISSION

[Release No. 34–60235; File No. SR–CBOE–2009–046]

Self-Regulatory Organizations; Chicago Board Options Exchange, Incorporated; Notice of Filing and Immediate Effectiveness of a Proposed Rule Change To Amend Its Chicago Board Options Exchange Stock Exchange Fees Schedule To Establish an Additional Transaction Fee Related to Stock Option Trades

July 2, 2009.

Pursuant to Section 19(b)(1) of the Securities Exchange Act of 1934 (the ''Act'')[1] and Rule 19–4 thereunder,[2] notice is hereby given that on July 1, 2009, the Chicago Board Options Exchange, Incorporated (the ''Exchange'' or ''CBOE'') filed with the Securities and Exchange Commission (the ''Commission'') the proposed rule change as described in Items I, II, and III below, which Items have been prepared by the Exchange. The Commission is publishing this notice to solicit comments on the proposed rule change from interested persons.

I. Self-Regulatory Organization's Statement of the Terms of Substance of the Proposed Rule Change

The Exchange proposes to amend its CBOE Stock Exchange (''CBSX'') Fees Schedule to establish a new transaction fee for the stock component of a stock-option trade. The text of the proposed rule change is available on the Exchange's Web site (*http://www.cboe.org/legal*), at the Exchange's Office of the Secretary, and at the Commission's Public Reference Room.

II. Self-Regulatory Organization's Statement of the Purpose of, and Statutory Basis for, the Proposed Rule Change

In its filing with the Commission, the self-regulatory organization included statements concerning the purpose of, and basis for, the proposed rule change and discussed any comments it received on the proposed rule change. The text of those statements may be examined at the places specified in Item IV below. The Exchange has prepared summaries, set forth in sections A, B, and C below, of the most significant parts of such statements.

A. Self-Regulatory Organization's Statement of the Purpose of, and Statutory Basis for, the Proposed Rule Change

1. Purpose

CBSX is increasingly processing more stock trades that are the stock component of stock option transactions. CBOE now intends to establish a fee for the execution of the stock portion of a stock option transaction in which the stock is crossed using any of the cross order types outlined in CBSX Rule 51.8 (Types of Orders Handled). The proposed fee is $0.0025 per share subject to a $1 per trade minimum and a $50 per trade maximum.

2. Statutory Basis

The proposed rule change is consistent with Section 6(b) of the Securities Exchange Act of 1934 (''Act''),[3] in general, and furthers the objectives of Section 6(b)(4)[4] of the Act in particular, in that it is designed to provide for the equitable allocation of reasonable dues, fees, and other charges among CBOE members and other persons using its facilities.

---

[8] 17 CFR 200.30–3(a)(12).

[1] 15 U.S.C. 78s(b)(1).

[2] 17 CFR 240.19b–4.

[3] 15 U.S.C. 78f(b).

[4] 15 U.S.C. 78f(b)(4).

B. Self-Regulatory Organization's Statement on Burden on Competition

CBOE does not believe that the proposed rule change will impose any burden on competition not necessary or appropriate in furtherance of the purposes of the Act.

C. Self-Regulatory Organization's Statement on Comments on the Proposed Rule Change Received From Members, Participants, or Others

No written comments were solicited or received with respect to the proposed rule change.

III. Date of Effectiveness of the Proposed Rule Change and Timing for Commission Action

The proposed rule change is designated by the Exchange as establishing or changing a due, fee, or other charge, thereby qualifying for effectiveness on filing pursuant to Section 19(b)(3)(A)(ii) [5] of the Act and subparagraph (f)(2) of Rule 19b–4 [6] thereunder.

At any time within 60 days of the filing of the proposed rule change, the Commission may summarily abrogate such rule change if it appears to the Commission that such action is necessary or appropriate in the public interest, for the protection of investors, or otherwise in furtherance of the purposes of the Act.

IV. Solicitation of Comments

Interested persons are invited to submit written data, views, and arguments concerning the foregoing, including whether the proposed rule change is consistent with the Act. Comments may be submitted by any of the following methods:

Electronic Comments

- Use the Commission's Internet comment form (*http://www.sec.gov/rules/sro.shtml*); or
- Send an e-mail to *rule-comments@sec.gov*. Please include File Number SR–CBOE–2009–046 on the subject line.

Paper Comments

- Send paper comments in triplicate to Elizabeth M. Murphy, Secretary, Securities and Exchange Commission, 100 F Street, NE., Washington, DC 20549–1090.

All submissions should refer to File Number SR–CBOE–2009–046. This file number should be included on the subject line if e-mail is used. To help the Commission process and review your comments more efficiently, please use only one method. The Commission will post all comments on the Commission's Internet Web site (*http://www.sec.gov/rules/sro.shtml*). Copies of the submission, all subsequent amendments, all written statements with respect to the proposed rule change that are filed with the Commission, and all written communications relating to the proposed rule change between the Commission and any person, other than those that may be withheld from the public in accordance with the provisions of 5 U.S.C. 552, will be available for inspection and copying in the Commission's Public Reference Room on official business days between the hours of 10 a.m. and 3 p.m. Copies of such filing also will be available for inspection and copying at the principal office of the Exchange. All comments received will be posted without change; the Commission does not edit personal identifying information from submissions. You should submit only information that you wish to make available publicly. All submissions should refer to File Number SR–CBOE–2009–046 and should be submitted on or before July 31, 2009.

For the Commission, by the Division of Trading and Markets, pursuant to delegated authority.[7]

Elizabeth M. Murphy,

Secretary.

[FR Doc. E9–16358 Filed 7–9–09; 8:45 am]

BILLING CODE 8010–01–P

[5] 15 U.S.C. 78s(b)(3)(A)(ii).

[6] 17 CFR 240.19b–4(f)(2).

[7] 17 CFR 200.30–3(a)(12).

SECURITIES AND EXCHANGE COMMISSION

[Release No. 34–60232; File No. SR–ISE–2009–43]

Self-Regulatory Organizations; International Securities Exchange, LLC; Notice of Filing and Immediate Effectiveness of Proposed Rule Change Relating To Amending the Direct Edge ECN Fee Schedule

July 2, 2009.

Pursuant to Section 19(b)(1) of the Securities Exchange Act of 1934 (''Act''),[1] and Rule 19b–4 thereunder,[2] notice is hereby given that on June 30, 2009, the International Securities Exchange, LLC (the ''Exchange'' or ''ISE'') filed with the Securities and Exchange Commission (''Commission'') the proposed rule change as described in Items I, II, and III below, which Items have been prepared by the ISE. The ISE filed the proposed rule change pursuant to Section 19(b)(3)(A) of the Act [3] and Rule 19b–4(f)(2) thereunder,[4] which renders the proposal effective upon filing with the Commission. The Commission is publishing this notice to solicit comments on the proposed rule change from interested persons.

I. Self-Regulatory Organization's Statement of the Terms of Substance of the Proposed Rule Change

The Exchange proposes to amend Direct Edge ECN's (''DECN'') fee schedule for ISE Members [5] to: (1) Reinstate the Super Tier Rebates, as defined below, that will apply to ISE Members whose transactions meet certain volume thresholds; (2) adopt new Ultra Tier Rebates, as defined below, that will apply to ISE Members whose transactions meet certain other volume thresholds; (3) adopt a new fee; and (4) make certain other clean-up changes. All of the changes described herein are applicable to ISE Members.

The text of the proposed rule change is available on the Exchange's Internet Web site at *http://www.ise.com* and at the Commission's Public Reference Room.

II. Self-Regulatory Organization's Statement of the Purpose of, and Statutory Basis for, the Proposed Rule Change

In its filing with the Commission, the Exchange included statements concerning the purpose of and basis for the proposed rule change and discussed any comments it received on the proposed rule change. The text of these statements may be examined at the places specified in Item IV below. The self-regulatory organization has prepared summaries, set forth in sections A, B, and C below, of the most significant aspects of such statements.

A. Self-Regulatory Organization's Statement of the Purpose of, and Statutory Basis for, the Proposed Rule Change

Purpose—DECN, a facility of ISE, operates two trading platforms, EDGX and EDGA. During the month of June, DECN offered a promotion whereby ISE Members that add liquidity on EDGX receive a rebate of $0.003 per share for all securities priced at or above $1.00 (''June Promotion''). ISE Members that remove liquidity on EDGX are charged $0.0028 per share for all securities priced at or above $1.00 and orders sent

[1] 15 U.S.C. 78s(b)(1).

[2] 17 CFR 240.19b–4.

[3] 15 U.S.C. 78s(b)(3)(A).

[4] 17 CFR 19b–4(f)(2).

[5] References to ISE Members in this filing refer to DECN Subscribers who are ISE Members.

to EDGX that subsequently get routed out are charged $0.0029 per share for all securities priced at or above $1.00.

The Exchange is now proposing to amend the DECN fee schedule to reinstate the volume thresholds applicable to the Super Tier Rebates that were in effect prior to the June Promotion in an effort to maintain a competitive rate. Accordingly, the Exchange proposes that, as of July 1, 2009, the DECN fee schedule will include a per share rebate in securities reported to Tape A and Tape C of $0.003 for securities priced at or above $1.00 when ISE Members add liquidity on EDGX if the ISE Member satisfies any of the following three criteria on a daily basis, measured monthly: (i) Adding 40,000,000 shares or more on either EDGX, EDGA or EDGX and EDGA combined; (ii) adding 20,000,000 shares or more on either EDGX, EDGA or EDGX and EDGA combined and routing 20,000,000 shares or more through EDGA; or (iii) adding 10,000,000 shares or more of liquidity to EDGX, so long as added liquidity on EDGX is at least 5,000,000 shares greater than the previous calendar month. The rebate described above is referred to as a ''Super Tier Rebate'' on the DECN fee schedule. The ISE Members that add liquidity in Tape A and Tape C securities and don't meet the Super Tier criteria, as set forth above, receive a rebate of $0.0025 per share for securities that are priced at or above $1.00.

The Exchange is proposing to make certain corresponding changes so that the changes described above are reflected throughout the DECN fee schedule. Such changes consist of: (1) Deleting the boxed text which discusses the June Promotion; (2) deleting language out of footnote 1 that discusses the June Promotion; and (3) changing the rebates associated with flags ''V'' and ''Y'' from $0.003 to $0.0025 per share for securities priced at or above $1.00.

Additionally, the Exchange is proposing to adopt a new Ultra Tier Rebate, as defined below, whereby ISE Members will be provided a $0.0032 rebate per share for securities priced at or above $1.00 when ISE Members add liquidity on EDGX if the attributed MPID satisfies one of the following criteria on a daily basis, measured monthly: (i) Adding 100,000,000 shares or more on EDGX; or (ii) adding 50,000,000 shares or more of liquidity to EDGX, so long as added liquidity on EDGX is at least 20,000,000 shares greater than the previous calendar month. The liquidity required to qualify for criterion (i) above shall be adjusted in the event that Total Consolidated Volume (''TCV''), defined as volume reported by all exchanges and trade reporting facilities to the consolidated transaction reporting plans for Tape A, B and C securities, falls below an average of 10,000,000,000 shares per day (''Target TCV'') in the relevant calendar month. In such circumstances, the adjusted amount of liquidity required to qualify under criterion (i) above shall be the percentage that actual reported TCV represents of Target TCV, multiplied by 100,000,000. The rebate described above is referred to as an ''Ultra Tier Rebate'' on the DECN fee schedule. The Exchange is adopting the Ultra Tier Rebate in an effort to increase volume on DECN.

The Exchange is also proposing to adopt a fee of $0.0015 per share for securities priced at or above $1.00 anytime the ROUQ or ROUC routing strategy is used on either EDGX or EDGA and this routing strategy results in an execution by an Enhanced Liquidity Provider (''ELP''). The ROUQ routing strategy enables ISE Members to interact with the order book and ELPs who elect to receive Indications of Interest (''IOIs'') from DECN. ROUC designated orders are multi-destination orders that sweep the order book and ELP destinations before any unfilled quantity is routed to low cost destinations. Accordingly, the Exchange is assessing this fee for ISE Members' utilization of these services.

The Exchange is proposing to make certain clarifying changes to the DECN fee schedule. First, the Exchange is proposing to collapse two references to EGDA fees into a single line item because there is no need to break out the fees by Tape as the fees are consistent regardless of which Tape the securities are reported on. Second, the Exchange is adding clarifying text to specify that orders routed to Nasdaq are assessed a fee of $0.003 per share for securities priced at or above $1.00 and to specify that this charge not only applies to orders routed to Nasdaq from EDGA, but also applies to orders routed to Nasdaq from EDGX.

The fee changes discussed in this filing will become operative on July 1, 2009.

Basis—The Exchange believes that the proposed rule change is consistent with the objectives of Section 6 of the Act,[6] in general, and furthers the objectives of Section 6(b)(4),[7] in particular, in that it is designed to provide for the equitable allocation of reasonable dues, fees and other charges among its members and other persons using its facilities. In particular, reinstating the volume thresholds applicable to the Super Tier Rebates and offering an Ultra Tier Rebate provides pricing incentives to market participants who route orders to DECN, allowing DECN to remain competitive. ISE notes that DECN operates in a highly competitive market in which market participants can readily direct order flow to competing venues if they deem fee levels at a particular venue to be excessive. The proposed rule change reflects a competitive pricing structure designed to incentivize market participants to direct their order flow to DECN. ISE believes the fees and credits remain competitive with those charged by other venues and therefore continue to be reasonable and equitably allocated to those members that opt to direct orders to DECN rather than competing venues.

B. Self-Regulatory Organization's Statement on Burden on Competition

The proposed rule change does not impose any burden on competition that is not necessary or appropriate in furtherance of the purposes of the Act.

C. Self-Regulatory Organization's Statement on Comments on the Proposed Rule Change Received From Members, Participants or Others

The Exchange has not solicited, and does not intend to solicit, comments on this proposed rule change. The Exchange has not received any unsolicited written comments from members or other interested parties.

III. Date of Effectiveness of the Proposed Rule Change and Timing for Commission Action

The foregoing rule change has become effective pursuant to Section 19(b)(3)(A) of the Act[8] and Rule 19b–4(f)(2)[9] thereunder. At any time within 60 days of the filing of such proposed rule change, the Commission may summarily abrogate such rule change if it appears to the Commission that such action is necessary or appropriate in the public interest, for the protection of investors, or otherwise in furtherance of the purposes of the Act.

IV. Solicitation of Comments

Interested persons are invited to submit written data, views, and arguments concerning the foregoing, including whether the proposed rule change is consistent with the Act. Comments may be submitted by any of the following methods:

[6] 15 U.S.C. 78f.

[7] 15 U.S.C. 78f(b)(4).

[8] 15 U.S.C. 78s(b)(3)(A).

[9] 17 CFR 19b–4(f)(2).

Electronic Comments

- Use the Commission's Internet comment form (*http://www.sec.gov/rules/sro.shtml*); or
- Send an e-mail to *rule-comments@sec.gov*. Please include File Number SR–ISE–2009–43 on the subject line.

Paper Comments

- Send paper comments in triplicate to Elizabeth M. Murphy, Secretary, Securities and Exchange Commission, Station Place, 100 F Street, NE., Washington, DC 20549–1090.

All submissions should refer to File Number SR–ISE–2009–43. This file number should be included on the subject line if e-mail is used. To help the Commission process and review your comments more efficiently, please use only one method. The Commission will post all comments on the Commission's Internet Web site (*http://www.sec.gov/rules/sro.shtml*). Copies of the submission, all subsequent amendments, all written statements with respect to the proposed rule change that are filed with the Commission, and all written communications relating to the proposed rule change between the Commission and any person, other than those that may be withheld from the public in accordance with the provisions of 5 U.S.C. 552, will be available for inspection and copying in the Commission's Public Reference Room, 100 F Street, NE., Washington, DC 20549, on official business days between the hours of 10 a.m. and 3 p.m. Copies of such filing also will be available for inspection and copying at the principal office of the ISE. All comments received will be posted without change; the Commission does not edit personal identifying information from submissions. You should submit only information that you wish to make publicly available. All submissions should refer to File Number SR–ISE–2009–43 and should be submitted on or before July 31, 2009.

For the Commission, by the Division of Trading and Markets, pursuant to delegated authority.[10]

Elizabeth M. Murphy,

Secretary.

[FR Doc. E9–16316 Filed 7–9–09; 8:45 am]

BILLING CODE 8010–01–P

[10] 17 CFR 200.30–3(a)(12).

SECURITIES AND EXCHANGE COMMISSION

[Investment Company Act Release No. 28808; 812–13545]

GE Funds, et al.,; Notice of Application

July 2, 2009.

AGENCY: Securities and Exchange Commission (''Commission'').

ACTION: Notice of an application under section 6(c) of the Investment Company Act of 1940 (''Act'') for an exemption from section 15(a) of the Act and rule 18f–2 under the Act, as well as from certain disclosure requirements.

SUMMARY OF APPLICATION: Applicants request an order that would permit them to enter into and materially amend subadvisory agreements without shareholder approval and would grant relief from certain disclosure requirements.

APPLICANTS: GE Funds, GE Institutional Funds, GE Investments Funds, Inc. (each, a ''Company'' and collectively, the ''Companies''), and GE Asset Management Incorporated (the ''Adviser'').

FILING DATES: The application was filed on July 9, 2008, and amended on November 8, 2008, May 8, 2009, and June 29, 2009. Applicants have agreed to file an amendment during the notice period, the substance of which is contained in this notice.

HEARING OR NOTIFICATION OF HEARING: An order granting the applications will be issued unless the Commission orders a hearing. Interested persons may request a hearing by writing to the Commission's Secretary and serving applicants with a copy of the request, personally or by mail. Hearing requests should be received by the Commission by 5:30 p.m. on July 27, 2009, and should be accompanied by proof of service on applicants, in the form of an affidavit or, for lawyers, a certificate of service. Hearing requests should be state the nature of the writer's interest, the reason for the request, and the issues contested. Persons who wish to be notified of a hearing may request notification by writing to the Commission's Secretary.

ADDRESSES: Secretary, U.S. Securities and Exchange Commission, 100 F Street, NE., Washington, DC 20549-1090. Applicants, GE Asset Management Incorporated, 3001 Summer Street, Stamford, CT 06905.

FOR FURTHER INFORMATION CONTACT: Christine Y. Greenlees, Senior Counsel, at (202) 551–6879, or Mary Kay Frech, Branch Chief, at (202) 551–6821 (Division of Investment Management, Office of Investment Company Regulation).

SUPPLEMENTARY INFORMATION: The following is a summary of the application. The complete application may be obtained via the Commission's Web site by searching for the file number, or an applicant using the Company name box, at *http://www.sec.gov/search/search.htm* or by calling (202) 551–8090.

Applicants' Representations:

1. GE Funds, a Massachusetts business trust, is registered under the Act as an open-end management investment company and currently offers sixteen series, each with separate investment objectives, policies and restrictions (each, a ''Fund'' and collectively, the ''Funds''). GE Institutional Funds, a Delaware statutory trust, is registered under the Act as an open-end management investment company and currently offers nine Funds, each with separate investment objectives, policies and restrictions. GE Investments Funds, Inc., a Virginia corporation, is registered under the Act an an open-end management investment company and currently offers fourteen series, each with separate investment objectives, policies and restrictions.[1] The Adviser, a wholly owned subsidiary of General Electric Company, is registered as an investment adviser under the Investment Advisers Act of 1940 (''Adviser Act''). The Adviser serves as investment adviser to each Fund under an investment advisory agreement with each Company (''Advisory Agreement'') that has been approved by the shareholders of each Fund and by the board of trustees or directors of the Companies (''Board''), including a majority of the trustees or directors who are not ''interested persons,'' as defined in section 2(a)(19) of the Act, of any Company or the Adviser (''Independent Board Members'').

2. Under the terms of each Advisory Agreement, the Adviser provides a Fund with investment research, advice and

[1] Applicants also request relief with respect to future Funds and any other existing or future registered open-end management investment company or series thereof that: (a) is advised by the Adviser or a person controlling, controlled by, or under common control with the Adviser (included in the term ''Adviser''); (b) uses the investment management structure described in the application; and (c) complies with the terms and conditions of the application (included in the term ''Funds''). The only existing registered open-end management companies that currently intend to rely on the requested order are named as applicants. If the name of any Fund contains the name of a Subadviser (as defined below), the name of the Adviser will precede the name of the Subadviser.

supervision, and furnishes an investment program for the Fund consistent with the Fund's investment objectives and policies. For the investment management services it provides to each Fund, the Adviser receives the fee specified in the Advisory Agreement from the Fund. The Advisory Agreements also permit, or would be amended (with appropriate Board and shareholder approval) to permit, the Adviser to enter into investment subadvisory agreements (''Subadvisory Agreements'') with one or more subadvisers (''Subadvisers''). Pursuant to its authority under certain Advisory Agreements, the Adviser (having obtained appropriate Board and shareholder approval) has entered into Subadvisory Agreements with various Subadvisers to provide investment advisory services to ceertain Funds. Each Subadviser is, and every future Subadviser will be, registered as an investment adviser under the Advisers Act. The Adviser will monitor and evaluate the Subadvisers and recommend to the Board their hiring, retention or termination. Subadvisers recommended to the Board by the Adviser will be selected and approved by the Board, including a majority of the Independent Board Members. Each Subadviser will have discretionary authority to invest all or a portion of the assets of a particular Fund, subject to the general supervision of the Adviser and the Board. The Adviser will compensate each Subadviser out of the fees paid to the Advisory by the Fund.

3. Applicants request an order to permit the Adviser, subject to the Board approval, to enter into and materially amend Subadvisory Agreements without obtaining shareholder approval. The requested relief will not extend to any Subadviser who is an affiliated person, as defined in section 2(a)(3) of the Act, of the Companies or the Adviser, other than by reason of serving as a Subadviser to one or more of the Funds (''Affiliated Subadviser'').

4. Applicants also request an exemption from the various disclosure provisions described below that may require the Funds to disclose fees paid by the Adviser to each Subadviser. An exemption is requested to permit a Fund to disclose (as both a dollar amount and as a percentage of the Fund's net assets): (a) the aggregate fees paid to the Adviser and any Affiliated Subadvisers; and (b) the aggregate fees paid to Subadvisers other than Affiliated Subadvisers (''Aggregate Fee Disclosure''). Any Fund that employs an Affiliated Subadviser will provide separate disclosure of any fees paid to the Affiliated Subadviser.

Applicants' Legal Analysis:

1. Section 15(a) of the Act provides, in relevant part, that it is unlawful for any person to act as an investment adviser to a registered investment company except pursuant to a written contract that has been approved by a vote of a majority of the company's outstanding voting securities. Rule 18f–2 under the Act provides that each series or class of stock in a series investment company affected by a matter must approve that matter if the Act requires shareholder approval.

2. Form N–1A is the registration statement used by open-end investment companies. Item 14(a)(3) of Form N–1A requires disclosure of the method and amount of the investment adviser's compensation.[2]

3. Rule 20a–1 under the Act requires proxies solicited with respect to an investment company to comply with Schedule 14A under the Securities Exchange Act of 1934 (''1934 Act''). Items 22(c)(1)(ii), 22(c)(1)(iii), 22(c)(8) and 22(c)(9) of Schedule 14A, taken together, require a proxy statement for a shareholder meeting at which the advisory contract will be voted upon to include the ''rate of compensation of the investment adviser,'' the ''aggregate amount of the investment adviser's fees,'' a description of the ''terms of the contract to be acted upon,'' and, if a change in the advisory fee is proposed, the existing and proposed fees and the difference between the two fees.

4. Form N–SAR is the semi-annual report filed with the Commission by registered investment companies. Item 48 of Form N–SAR requires investment companies to disclose the rate schedule for fees paid to their investment advisers, including the Subadvisers.

5. Regulation S-X sets forth the requirements for financial statements required to be included as part of investment company registration statements and shareholder reports filed with the Commission. Section 6–07(2)(a), (b), and (c) of Regulation S–X require that investment companies include in their financial statements information about investment advisory fees.

6. Section 6(c) of the Act provides that the Commission may exempt any person, security, or transaction or any class or classes of persons, securities, or transactions from any provisions of the Act, or from any rule thereunder, if such exemption is necessary or appropriate in the public interest and consistent with the protection of investors and the purposes fairly intended by the policy and provisions of the Act. Applicants state that their requested relief meets this standard for the reasons discussed below.

7. Applicants assert that the shareholders rely on the Adviser's experience to select one or more Subadvisers best suited to achieve the Fund's investment objectives. Applicants assert that, from the perspective of the investor, the role of the Subadvisers is comparable to that of the individual portfolio managers employed by traditional investment company advisory firms. Applicants state that requiring shareholder approval of each Subadvisory Agreement would impose costs and unnecessary delays on the Funds, and may preclude the Adviser from acting promptly in a manner considered advisable by the Board. Applicants note that the Advisory Agreements and any Subadvisory Agreement with an Affiliated Subadviser will remain subject to section 15(a) of the Act and rule 18f–2 under the Act.

8. Applicants assert that many Subadvisers used a ''posted'' rate schedule to set their fees. Applicants state that while Subadvisers are willing to negotiate fees that are lower than those posted on the schedule, they are reluctant to do so where the fees are disclosed to other prospective and existing customers. Applicants submit that the requested relief will allow the Adviser to negotiate more effectively with each Subadviser.

Applicants' Conditions

Applicants agree that any order granting the requested relief will be subject to the following conditions:

1. Before a Fund may rely on the order requested in the application, the operation of the Fund in the manner described in the application will be approved by a majority of the Fund's outstanding voting securities, as defined in the Act, or, in the case of a Fund whose public shareholders purchase shares on the basis of a prospectus containing the disclosure contemplated by condition 2 below, by the sole initial shareholder before offering the Fund's shares to the public.

2. The prospectus for each Fund will disclose the existence, substance, and effect of any order granted pursuant to the application. Each Fund will hold itself out to the public as employing the management structure described in the application. The prospectus will prominently disclose that the Adviser has ultimate responsibility (subject to oversight by the Board) to oversee the Subadvisers and recommend their hiring, termination, and replacement.

[2] Form N–1A was recently amended by the Commission, effective March 31, 2009, and Item 14(a)(3) should be read to refer to Item 19(a)(3) for each Fund when that Fund begins using the revised form.

3. Within 90 days of the hiring of a new Subadviser, the affected Fund's shareholders will be furnished all information about the new Subadviser that would be included in a proxy statement, except as modified to permit Aggregate Fee Disclosure.

This information will include Aggregate Fee Disclosure and any change in such disclosure caused by the addition of the new Subscriber. To meet this obligation, the Fund will provide shareholders within 90 days of the hiring of a new Subadviser with an information statement meeting the requirements of Regulation 14C, Schedule 14C, and Item 22 of Schedule 14A under the 1934 Act, except as modified by the order to permit Aggregate Fee Disclosure.

4. The Adviser will not enter into a Subadvisory Agreement with any Affiliated Subadviser without that agreement, including the compensation to be paid thereunder, being approved by the shareholders of the applicable Fund.

5. At all times, at least a majority of the Board will be Independent Board Members, and the nomination of new or additional Independent Board Members will be placed within the discretion of the then-existing Independent Board Members.

6. When a Subadviser change is proposed for a Fund with an Affiliated Subadviser, the Board, including a majority of the Independent Board Members, will make a separate finding, reflected in the applicable Board minutes, that such change is in the best interests of the Fund and its shareholders and does not involve a conflict of interest from which the Adviser or the Affiliated Subadviser derives an inappropriate advantage.

7. Independent legal counsel, as defined in rule 0–1(a)(6) under the Act, will be engaged to represent the Independent Board Members. The selection of such counsel will be within the discretion of the then existing Independent Board Members.

8. The Adviser will provide the Board, no less frequently than quarterly, with information about the profitability of the Adviser on a per-Fund basis. The information will reflect the impact on profitability of the hiring or termination of any Subadviser during the applicable quarter.

9. Whenever a Subadviser is hired or terminated, the Advisor will provide the Board with information showing the expected impact on the profitability of the Adviser.

10. The Adviser will provide general management services to each Fund, including overall supervisory responsibility for the general management and investment of the fund's assets and, subject to review and approval of the Board, will: (a) set each Fund's overall investment strategies; (b) evaluate, select and recommend Subadvisers to manage all or a part of a Fund's assets; (c) when appropriate, allocate and reallocate a Fund's assets among multiple Subadvisers; (d) monitor and evaluate the performance of Subadvisers; and (e) implement procedures reasonably designed to ensure that the Subadvisers comply with each Fund's investment objective, policies and restrictions.

11. No director, trustee or officer of any Company, or director or officer of the Adviser, will own directly or indirectly (other than through a pooled investment vehicle that is not controlled by such person) any interest in a Subadviser, except for: (a) ownership of interests in the Adviser or any entity that controls, is controlled by, or is under common control with the Adviser; or (b) ownership of less than 1% of the outstanding securities of any class of equity or debt of a publicly traded company that is either a Subadviser or an entity that controls, is controlled by, or is under common control with a Subadviser.

12. Each Fund will disclose in its registration statement the Aggregate Fee Disclosure.

13. In the event the Commission adopts a rule under the Act providing substantially similar relief to that in the order requested in the application, the requested order will expire on the effective date of that rule.

For the Commission, by the Division of Investment Management, under delegated authority.

Elizabeth M. Murphy,

Secretary.

[FR Doc. E9–16332 Filed 07/09/2009 at 8:45 am; Publication Date: 07/10/2009]

BILLING CODE

SOCIAL SECURITY ADMINISTRATION

Agency Information Collection Activities: Proposed Request and Comment Request

The Social Security Administration (SSA) publishes a list of information collection packages requiring clearance by the Office of Management and Budget (OMB) in compliance with Public Law 104–13, the Paperwork Reduction Act of 1995, effective October 1, 1995. This notice includes revisions and extensions of OMB-approved information collections and a new collection.

SSA is soliciting comments on the accuracy of the agency's burden estimate; the need for the information; its practical utility; ways to enhance its quality, utility, and clarity; and ways to minimize the burden on respondents, including the use of automated collection techniques or other forms of information technology. Mail, e-mail, or fax your comments and recommendations on the information collection(s) to the OMB Desk Officer and the SSA Reports Clearance Officer to the addresses or fax numbers shown below.

(OMB), Office of Management and Budget, *Attn:* Desk Officer for SSA, *Fax:* 202–395–6974, *E-mail address: OIRA_Submission@omb.eop.gov.*

(SSA), Social Security Administration, DCBFM, *Attn:* Reports Clearance Officer, 1332 Annex Building, 6401 Security Blvd., Baltimore, MD 21235, *Fax:* 410–965–6400, *E-mail address: OPLM.RCO@ssa.gov.*

I. The information collection below is pending at SSA. SSA will submit it to OMB within 60 days from the date of this notice. To be sure we consider your comments, we must receive them no later than September 8, 2009. Individuals can obtain copies of the collection instrument by calling the SSA Reports Clearance Officer at 410–965–3758, or by writing to the e-mail address we list above.

1. Statement of Reclamation Action—31 CFR 210—0960–0734. SSA uses Form SSA–1713 to collect information to determine if a Canadian bank is able to return erroneous payments, and to determine how and when it can return the payments made after the death of a beneficiary who elected to have payments sent to Canada. Form SSA–1712 (or SSA–1712 CN) is the cover sheet SSA prepares to request return of a payment erroneously made after the death of the recipient. SSA sends Form SSA–1712 with Form SSA–1713. The respondents are Canadian financial institutions that received Social Security payments.

Type of Request: Extension of an OMB-approved information collection.

Number of Respondents: 15.

Frequency of Response: 1.

Average Burden per Response: 5 minutes.

Estimated Annual Burden: 1 hour.

II. SSA has submitted the information collections we list below to OMB for clearance. Your comments on the information collections would be most useful if OMB and SSA receive them within 30 days from the date of this publication. To be sure we consider your comments, we must receive them

no later than August 10, 2009. You can obtain a copy of the OMB clearance packages by calling the SSA Reports Clearance Officer at 410–965–3758 or by writing to the above e-mail address.

1. Statement of Claimant or Other Person—20 CFR 404.702 & 416.570—0960–0045. SSA uses the SSA–795 to obtain information from claimants or other persons having knowledge of facts in connection with claims for Supplemental Security Income (SSI) or Social Security benefits when there is no standard form to collect the needed information. SSA then uses the information to process claims for benefits or for ongoing issues related to the above programs. The respondents are applicants/recipients of SSI or Social Security benefits, or others who are in a position to provide information pertinent to the claim(s).

Type of Request: Revision of an OMB-approved information collection.

Number of Respondents: 305,500.

Frequency of Response: 1.

Average Burden per Response: 15 minutes.

Estimated Annual Burden: 76,375 hours.

2. Claim for Amounts Due in the Case of a Deceased Beneficiary—20 CFR 404.503(b)—0960–0101. A completed SSA–1724 ensures proper payment of an underpayment due a deceased beneficiary. It is required when there is insufficient information in the file to identify the person(s) entitled to the underpayment, or the person's address. Generally, SSA collects the information when a surviving widow(er) is not already entitled to a monthly benefit on the same earnings record, or is not filing for a lump-sum death payment as a living-with spouse. The respondents are applicants for underpayments owed to deceased beneficiaries.

Note: This is a correction notice. SSA published this information collection with the incorrect burden information on April 07, 2009 at 74 FR 15808. We are revising the burden information.

Type of Request: Revision of an OMB-approved information collection.

Number of Respondents: 250,000.

Frequency of Response: 1.

Average Burden per Response: 10 minutes.

Estimated Annual Burden: 41,667 hours.

3. State Agency Report of Obligations for SSA Disability Programs (SSA–4513); Time Report of Personnel Services for Disability Determination Services (SSA–4514); State Agency Schedule of Equipment Purchased for SSA Disability Programs (SSA–871)—20 CFR 404.1626—0960–0421. SSA uses Forms SSA–4513, SSA–4514, and SSA–871 to collect data necessary for detailed analysis and evaluation of costs State Disability Determination Services (DDS) incur in making disability determinations for SSA. The data are also utilized in determining funding levels for each DDS. Respondents are State DDSs.

Type of Request: Revision of an OMB-approved information collection.

Number of Respondents: 54.

Estimated Annual Burden: 756 hours.

	Respondents	Frequency of response	Total annual responses	Average burden per response (min)	Estimated annual burden (hours)
SSA–4513 &Addendum	54	4	216	90	324
SSA–4514	54	4	216	90	324
SSA–871	54	4	216	30	108
Totals	54				756

4. Social Security Number Verification Services—20 CFR 401.45—0960–0660. Internal Revenue Service regulations obligate employers to provide SSA with wage and tax data using Form W–2 or its electronic equivalent. As part of this process the employer must furnish the employee's name and Social Security number (SSN). The employee's name and SSN must match SSA's records for SSA to post earnings to the employee's earnings record, which SSA maintains. SSA offers several cost-free methods for employers to verify employee information. The cost-free methods include:

1. Internet-based service, known as the Social Security Number Verification Service (SSNVS)—employers can verify if the reported names and SSNs of their employees match SSA's records;

2. The Employee Verification Service (EVS)—employers verify, via paper and telephone, whether the reported names and SSNs of their employees match SSA's records;

3. SSA's National 800 Number—an automated telephone employee verification service (TNEV) allows callers with an SSA-authorized PIN and password to verify employees' names and SSNs through TNEV.

Type of Request: Revision of an OMB-approved information collection.

Verification system	Number of respondents	Frequency of response	Number of responses	Average burden per response (minutes)	Total annual burden (hours)
EVS	15,000	2	30,000	10	5,000
EVS One-Time Registration	50	1	50	2	2
SSNVS	200,000	60	12,000,000	5	1,000,000
TNEV	35,000	16	560,000	9	84,000
Totals	250,050	79	12,590,050	26	1,089,002

Dated: July 6, 2009.

John Biles,

Reports Clearance Officer, Center for Reports Clearance, Social Security Administration.

[FR Doc. E9–16303 Filed 7–9–09; 8:45 am]

BILLING CODE 4191–02–P

DEPARTMENT OF TRANSPORTATION

Surface Transportation Board

[STB Finance Docket No. 35258]

Mississippi Central Railroad Co.—Change in Operators Exemption—Tishomingo Railroad Company, Inc

Mississippi Central Railroad Co. (MSCI),[1] a Class III rail carrier, has filed a verified notice of exemption under 49 CFR 1150.41 to change operators from Tishomingo Railroad Company, Inc. (TISH),[2] to MSCI on a line of railroad of the State of Mississippi (the State), at Iuka, MS. Pursuant to an agreement with TISH, MSCI will lease and operate approximately 10 miles of rail line between Norfolk Southern Railway Company's Iuka Wye at milepost 0.0, and the Tri-State Commerce Park at milepost 10.0, in Tishomingo County, MS. MSCI states that, pursuant to the lease agreement with the State, MSCI will lease, operate, maintain, and perform all common carrier service on the line. This change in operators is exempt under 49 CFR 1150.41(c).[3]

Based on projected revenues for the line, MSCI expects to remain a Class III rail carrier after consummation of the proposed transaction. MSCI certifies that its projected annual revenues as a result of this transaction will not result in the creation of a Class II or Class I rail carrier.

MSCI states that it intends to consummate the transaction on August 1, 2009 (at least 30 days after the notice of exemption was filed), and that operations will begin thereafter.

Pursuant to the Consolidated Appropriations Act, 2008, Public Law No. 110–161, § 193, 121 Stat. 1844 (2007), nothing in this decision authorizes the following activities at any solid waste rail transfer facility: Collecting, storing, or transferring solid waste outside of its original shipping container; or separating or processing solid waste (including baling, crushing, compacting, and shredding). The term ''solid waste'' is defined in section 1004 of the Solid Waste Disposal Act, 42 U.S.C. 6903.

If the verified notice contains false or misleading information, the exemption is void *ab initio*. Petitions to revoke the exemption under 49 U.S.C. 10502(d) may be filed at any time. The filing of a petition to revoke will not automatically stay the effectiveness of the exemption. Petitions for stay must be filed no later than July 17, 2009 (at least 7 days before the exemption becomes effective).

An original and 10 copies of all pleadings, referring to STB Finance Docket No. 35258, must be filed with the Surface Transportation Board, 395 E Street, SW., Washington, DC 20423–0001. In addition, a copy of each pleading must be served on Daniel A. LaKemper, General Counsel, Mississippi Central Railroad Co., 1318 S. Johanson Road, Peoria, IL 61607.

Board decisions and notices are available on our Web site at ''*http://www.stb.dot.gov.*''

Decided: July 6, 2009.

By the Board, Rachel D. Campbell, Director, Office of Proceedings.

Jeffrey Herzig,

Clearance Clerk.

[FR Doc. E9–16319 Filed 7–9–09; 8:45 am]

BILLING CODE 4915–01–P

[1] MSCI is controlled by Pioneer Railcorp. *See Pioneer Railcorp—Continuance in Control Exemption—Gettysburg & Northern Railroad Co.,* STB Finance Docket No. 34010 (STB served Feb. 27, 2001).

[2] *See Tishomingo Railroad Company, Inc.—Lease and Operation Exemption—Line of State of Mississippi at Iuka, MS,* STB Finance Docket No. 33806 (STB served Oct. 28, 1999).

[3] In order to quality for a change in operators exemption, an applicant must give notice to shippers on the line. *See* 49 CFR 1150.42(b). MSCI states that no shippers are known to have shipped or received freight within the last 2 years, therefore no service of this notice is required on shippers. MSCI also certifies that a copy of the verified notice of exemption was sent to the State.

DEPARTMENT OF TRANSPORTATION

Federal Highway Administration

Notice of Final Federal Agency Actions on Proposed Highway in California

AGENCY: Federal Highway Administration (FHWA), DOT.

ACTION: Notice of limitation on claims for judicial review of actions by the California Department of Transportation (Caltrans), pursuant to 23 U.S.C. 327.

SUMMARY: The FHWA, on behalf of Caltrans, is issuing this notice to announce actions taken by Caltrans that are final within the meaning of 23 U.S.C. 139(*l*)(1). The actions relate to a proposed highway project, the Cold Spring Canyon Bridge Suicide Barrier project on State Route 154 at Cold Spring Canyon Bridge, 05–SB–154–PM 22.9/23.1, in the County of Santa Barbara, State of California. Those actions grant licenses, permits, and approvals for the project.

DATES: By this notice, the FHWA, on behalf of Caltrans, is advising the public of final agency actions subject to 23 U.S.C. 139(*l*)(1). A claim seeking judicial review of the Federal agency actions on the highway project will be barred unless the claim is filed on or before January 6, 2010. If the Federal law that authorizes judicial review of a claim provides a time period of less than 180 days for filing such claim, then that shorter time period still applies.

FOR FURTHER INFORMATION CONTACT: For Caltrans: Matt Fowler, Chief, Environmental Branch, Caltrans, 50 Higuera Street, San Luis Obispo, CA 93401 Monday through Friday 8 a.m. to 5 p.m. (805) 542–4603 or *matt_c_fowler@dot.ca.gov.*

SUPPLEMENTARY INFORMATION: Effective July 1, 2007, the Federal Highway Administration (FHWA) assigned, and the California Department of Transportation (Caltrans) assumed, environmental responsibilities for this project pursuant to 23 U.S.C. 327. Notice is hereby given that the Caltrans has taken final agency actions subject to 23 U.S.C. 139(*l*)(1) by issuing licenses, permits, and approvals for the following highway project in the State of California. The project includes the installation of a physical suicide barrier on each side of the Cold Spring Canyon Bridge, on State Route 154 near San Marcos Pass in Santa Barbara County. The bridge spans a distance of over 1,200 feet in length and is more than 400 feet in height. The purpose of the proposed project is to: (1) Reduce the number of suicides at the Cold Spring Canyon Bridge resulting from individuals jumping off the bridge, and (2) Reduce the exposure to risks for emergency personnel such as law enforcement officers or search and rescue teams when attempting to prevent persons from jumping off of the bridge, and reduce the number of recoveries that need to be performed following a suicide jump from the bridge. The actions by the Federal agencies, and the laws under which such actions were taken, are described in the Environmental Assessment/Finding of No Significant Impact (EA/FONSI) for the project, approved on June 22, 2009, and in other documents in the FHWA project records. The EA/FONSI and other project records are available by contacting Caltrans at the address provided above. The Caltrans EA/FONSI can be viewed and downloaded from the Caltrans Web site at *http://www.dot.ca.gov/dist05/projects/sb_cold_springs/eir09june.pdf*

and also viewed at public libraries in the project area.

This notice applies to all Federal agency decisions as of the issuance date of this notice and all laws under which such actions were taken, including but not limited to:

1. *General:* National Environmental Policy Act (NEPA) [42 U.S.C. 4321–4351].

2. *Historic and Cultural Resources:* National Historic Preservation Act of 1966, as amended (NHPA), 16 U.S.C. 470 and United States Department of Transportation Act of 1966 (Section 4[f]), 49 USC 303.

3. *Executive Orders:* E.O. 13112 Invasive Species.

(Catalog of Federal Domestic Assistance Program Number 20.205, Highway Planning and Construction. The regulations implementing Executive Order 12372 regarding intergovernmental consultation on Federal programs and activities apply to this program.)

Authority: 23 U.S.C. 139(*l*)(1).

Issued on: July 6, 2009.

Cindy Vigue,

Director, State Programs, Federal Highway Administration, Sacramento, California.

[FR Doc. E9–16331 Filed 7–9–09; 8:45 am]

BILLING CODE 4910–RY–P

DEPARTMENT OF THE TREASURY

Office of the Comptroller of the Currency

Agency Information Collection Activities: Submission for OMB Review; Comment Request

AGENCY: Office of the Comptroller of the Currency, Treasury.

ACTION: Notice and request for comment.

SUMMARY: The OCC, as part of its continuing effort to reduce paperwork and respondent burden, invites the general public and other Federal agencies to take this opportunity to comment on a continuing information collection, as required by the Paperwork Reduction Act of 1995. An agency may not conduct or sponsor, and a respondent is not required to respond to, an information collection unless it displays a currently valid OMB control number. The OCC is soliciting comment concerning its information collection titled, ''Minimum Security Devices and Procedures, Reports of Suspicious Activities, and Bank Secrecy Act Compliance—12 CFR 21.'' The OCC also gives notice that it has sent the information collection to the Office of Management and Budget (OMB) for review.

DATES: Comments must be received by August 10, 2009.

ADDRESSES: Communications Division, Office of the Comptroller of the Currency, Public Information Room, Mailstop 2–3, *Attention:* 1557–0180, 250 E Street, SW., Washington, DC 20219. In addition, comments may be sent by fax to (202) 874–5274, or by electronic mail to *regs.comments@occ.treas.gov*. You may personally inspect and photocopy comments at the OCC, 250 E Street, SW., Washington, DC 20219. For security reasons, the OCC requires that visitors make an appointment to inspect comments. You may do so by calling (202) 874–4700. Upon arrival, visitors will be required to present valid government-issued photo identification and submit to security screening in order to inspect and photocopy comments.

Additionally, you should send a copy of your comments to OCC Desk Officer, 1557–0180, by mail to U.S. Office of Management and Budget, 725, 17th Street, NW., #10235, Washington, DC 20503, or by fax to (202) 395–6974.

FOR FURTHER INFORMATION CONTACT: You can request additional information or a copy of the collection from Mary H. Gottlieb, OCC Clearance Officer, (202) 874–5090, Legislative and Regulatory Activities Division, Office of the Comptroller of the Currency, 250 E Street, SW., Washington, DC 20219.

SUPPLEMENTARY INFORMATION: The OCC is proposing to extend OMB approval of the following information collection:

Title: Minimum Security Devices and Procedures, Reports of Suspicious Activities, and Bank Secrecy Act Compliance—12 CFR 21.

OMB Control No.: 1557–0180.

SAR Form Nos.: 8010/8010–9.

Description: This submission covers an existing regulation and involves no change to the regulation or to the information collection requirements. The OCC requests only that OMB extend its approval of the information collection.

Minimum Security Devices and Procedures (12 CFR 21.2 and 21.4)

Under §§ 21.2 and 21.4, a national bank is required to designate a security officer who must develop and administer a written security program. The security officer shall report at least annually to the bank's board of directors on the effectiveness of the security program. The substance of the report shall be reflected in the Board's minutes. These requirements ensure that the security officer is responsible for the security program and that bank management and the board of directors are aware of the content and effectiveness of the program. These requirements ensure prudent bank management and bank safety and soundness. The OCC uses the information to ensure that national banks carefully review the effectiveness of their security systems and comply with Federal law. The information collection ensures that national banks conduct their activities in accordance with safe and sound principles. A national bank's board of directors uses the information to ensure that the bank's security system is adequate.

Suspicious Activity Report (SAR) (12 CFR 21.11)

In 1992, the Department of the Treasury was granted broad authority to require suspicious transaction reporting under the Bank Secrecy Act. *See* 31 U.S.C. 5318(g). FinCEN, which has been delegated authority to administer the Bank Secrecy Act, joined with the bank regulators in 1996 in requiring, on a consolidated form (the SAR form), reports of suspicious transactions. *See* 31 CFR 103.18(a). The filing of SARs is necessary to prevent and detect crimes involving bank funds, bank insiders, criminal transactions, and money laundering. These requirements are necessary to ensure bank safety and soundness.

The Financial Crimes Enforcement Network (FinCEN) and Federal financial institution supervisory agencies [1] (bank regulators) adopted the SAR in 1996 to simplify the process through which depository institutions (banks) inform their regulators and law enforcement about suspected criminal activity.

The SAR was updated in 1999, 2002, and 2006. The 2006 revisions to the SAR form enhanced the clarity of the instructions to allow for joint filing of SARs, and improved the usefulness of the SAR to law enforcement. These revisions were originally scheduled to become effective on June 30, 2007. On May 1, 2007, FinCEN issued a notice to communicate a delay in the dates for using the revised SAR form, and stated its intention to establish new effective dates in a future notice consistent with its data quality initiatives.[2] FinCEN has

[1] The five Federal financial institution supervisory agencies are the Office of the Comptroller of the Currency (OCC), Board of Governors of the Federal Reserve System (FRB), Federal Deposit Insurance Corporation (FDIC), Office of Thrift Supervision (OTS), and National Credit Union Administration (NCUA).

[2] 83 FR 23891 (May 1, 2007). This announcement did not affect the BSA filing requirements, and financial institutions were to continue to use the July 2003 form until further notice. (*http://www.fincen.gov/forms/files/f9022–47_sar-di.pdf*).

not established new effective dates for using this revised SAR form.

Consistent with the 2006 revisions to the SAR form, FinCEN and the bank regulators are once again proposing to adopt the revised 2006 SAR form. This SAR form will not become effective until FinCEN establishes new dates consistent with its data quality initiatives. The OCC uses the SAR and the supporting documentation retained by national banks for supervisory purposes. The information collection identifies suspicious transactions that could pose a threat to national banks.

Banks are required to maintain a copy of any SAR filed and the original or business record equivalent of any supporting documentation for a period of five years. The documents are necessary for criminal investigations and prosecutions.

Procedures for Monitoring Bank Secrecy Act Compliance (12 CFR 21.21)

Under 12 CFR 21.21, national banks are required to develop and provide for the continued administration of a program reasonably designed to assure and monitor their compliance with the Bank Secrecy Act (BSA) and Treasury regulations at 12 CFR part 31. The compliance program shall be reduced to writing, approved by the board of directors, and noted in the minutes. These requirements are necessary to ensure bank compliance with the BSA and 12 CFR part 31. National banks use the compliance program to ensure compliance with the Bank Secrecy Act. Bank examiners review the written procedures and board approval in the examination process.

FinCEN and the Internal Revenue Detroit Computing Center (DCC) operate the computer system containing the information collected from banks. FinCEN and DCC provide on-line access to the information to representatives of bank regulators and appropriate law enforcement agencies.

Type of Review: Extension of a currently approved collection.

Affected Public: Individuals; Businesses or other for-profit.

Estimated Number of Respondents: 1,501.

Estimated Total Annual Responses: 337,421.

Frequency of Response: On occasion.

Estimated Total Annual Burden: 449,086.

OCC, FinCEN, FRB, FDIC, OTS, and NCUA issued a 60-day notice for comment on April 1, 2009. 71 FR 14863. The notice covered the information collection requirements contained in the SAR for all of the agencies and the information collection requirements in OCC's part 21. No comments were received by the OCC. FinCEN received three comments, one of which was also received by the FDIC. A comment summary is included in the information collection submitted to OMB.

The OCC invites continued comments on:

(a) Whether the collection of information is necessary for the proper performance of the functions of the agency, including whether the information has practical utility;

(b) The accuracy of the agency's estimate of the burden of the collection of information;

(c) Ways to enhance the quality, utility, and clarity of the information to be collected;

(d) Ways to minimize the burden of the collection on respondents, including through the use of automated collection techniques or other forms of information technology; and

(e) Estimates of capital or startup costs and costs of operation, maintenance, and purchase of services to provide information.

Dated: July 6, 2009.

Michele Meyer,

Assistant Director, Legislative and Regulatory Activities Division.

[FR Doc. E9–16382 Filed 7–9–09; 8:45 am]

BILLING CODE 4810–33–P

DEPARTMENT OF VETERANS AFFAIRS

Joint Biomedical Laboratory Research and Development and Clinical Science Research and Development Services Scientific Merit Review Board [Request for Applications: Clinical Science Research and Development (RFA: ''CSR&D) Award for Investigators Associated with the National Center for Post Traumatic Stress Disorder (PTSD)'']; Notice of Meeting

The Department of Veterans Affairs gives notice under Public Law 92–463 (Federal Advisory Committee Act) that a special emphasis review panel of the Joint Biomedical Laboratory Research and Development and Clinical Science Research and Development Services Scientific Merit Review Board [RFA: ''CSR&D Award for Investigators Associated with the National Center for Post Traumatic Stress Disorder (PTSD)''] will conduct a telephone conference call on Monday, July 27, 2009, from 11 a.m. to 3 p.m. through the Department of Veterans Affairs, Office of Research and Development, Washington, DC.

The purpose of this special emphasis review panel of the Merit Review Board is to provide advice on the scientific quality, budget, safety and mission relevance of research proposals submitted for VA merit review consideration. Proposals submitted for review by the Board involve a range of specialties and subspecialties related to PTSD, substance use and abuse.

This conference call will be open to the public for approximately one-half hour at the start of the session to discuss the general status of the program. The remaining portion of the conference call will be closed to the public for the review, discussion, and evaluation of non-clinician credentials and research proposals to be performed for the Department of Veterans Affairs, discussion and recommendations will deal with qualifications of personnel conducting the studies, the disclosure of which would constitute a clearly unwarranted invasion of personal privacy, as well as research information, the premature disclosure of which could significantly frustrate implementation of proposed agency action regarding such research proposals.

As provided by subsection 10(d) of Public Law 92–463, as amended, closing portions of a meeting is in accordance with 5 U.S.C., 552b(c)(6) and (c)(9)(B). Individuals wishing to participate in the call or who would like to obtain a copy of the conference call minutes and roster of the members of the review panel should contact LeRoy G. Frey, PhD, Chief, Program Review (121F), Department of Veterans Affairs, 810 Vermont Avenue, NW., Washington, DC 20420 at (202) 461–1664.

Dated: July 6, 2009.

By Direction of the Secretary.

E. Philip Riggin,

Committee Management Officer.

[FR Doc. E9–16342 Filed 7–9–09; 8:45 am]

BILLING CODE 8320–01–P

Reader Aids

Federal Register

Vol. 74, No. 131

Friday, July 10, 2009

CUSTOMER SERVICE AND INFORMATION

Federal Register/Code of Federal Regulations	
General Information, indexes and other finding aids	**202–741–6000**
Laws	**741–6000**
Presidential Documents	
Executive orders and proclamations	**741–6000**
The United States Government Manual	**741–6000**
Other Services	
Electronic and on-line services (voice)	**741–6020**
Privacy Act Compilation	**741–6064**
Public Laws Update Service (numbers, dates, etc.)	**741–6043**
TTY for the deaf-and-hard-of-hearing	**741–6086**

ELECTRONIC RESEARCH

World Wide Web

Full text of the daily Federal Register, CFR and other publications is located at: **http://www.gpoaccess.gov/nara/index.html**

Federal Register information and research tools, including Public Inspection List, indexes, and links to GPO Access are located at: **http://www.archives.gov/federal__register**

E-mail

FEDREGTOC-L (Federal Register Table of Contents LISTSERV) is an open e-mail service that provides subscribers with a digital form of the Federal Register Table of Contents. The digital form of the Federal Register Table of Contents includes HTML and PDF links to the full text of each document.

To join or leave, go to **http://listserv.access.gpo.gov** and select *Online mailing list archives, FEDREGTOC-L, Join or leave the list (or change settings);* then follow the instructions.

PENS (Public Law Electronic Notification Service) is an e-mail service that notifies subscribers of recently enacted laws.

To subscribe, go to **http://listserv.gsa.gov/archives/publaws-l.html** and select *Join or leave the list (or change settings);* then follow the instructions.

FEDREGTOC-L and **PENS** are mailing lists only. We cannot respond to specific inquiries.

Reference questions. Send questions and comments about the Federal Register system to: **fedreg.info@nara.gov**

The Federal Register staff cannot interpret specific documents or regulations.

Reminders. Effective January 1, 2009, the Reminders, including Rules Going Into Effect and Comments Due Next Week, no longer appear in the Reader Aids section of the Federal Register. This information can be found online at **http://www.regulations.gov.**

CFR Checklist. Effective January 1, 2009, the CFR Checklist no longer appears in the Federal Register. This information can be found online at **http://bookstore.gpo.gov/.**

FEDERAL REGISTER PAGES AND DATE, JULY

31345–31566 1
31567–31828 2
31829–32048 6
32049–32388 7
32389–32784 8
32785–33138 9
33139–33318 10

CFR PARTS AFFECTED DURING JULY

At the end of each month, the Office of the Federal Register publishes separately a List of CFR Sections Affected (LSA), which lists parts and sections affected by documents published since the revision date of each title.

3 CFR

Proclamations:
8394 31821
8395 33137
Executive Orders:
13510 32047
Administrative Orders:
Presidential Determinations:
No. 2009-22 of July 1, 2009 32785

5 CFR

1600 31345

7 CFR

1 32787
52 32389
246 32049
354 32391
457 32049
760 31567
1205 32400
1400 31567
1439 31567
1491 31578
1730 32406
3431 32788

9 CFR

78 33139
93 31582
320 31829

10 CFR

430 31829
431 32059
Proposed Rules:
431 33171

11 CFR

111 .....31345, 33140

12 CFR

41 .....31484, 32410
222 .....31484, 32410
308 32226
334 .....31484, 32410
363 32226
571 .....31484, 32410
717 .....31484, 32410
1253 31602
Proposed Rules:
41 31529
222 31529
334 31529
571 31529
717 31529

14 CFR

1 31842
23 32799
25 32799
26 31618
27 32799
29 32799
39 .....31350, 32411, 32414, 32417, 32419, 32421, 32423, 32426, 32802
71 .....31843, 31844, 31845, 31849, 32073, 32074, 33143
91 .....32799, 32803
101 31842
121 .....31618, 32799, 32804
125 .....31618, 32799
129 31618
135 32799
Proposed Rules:
25 32810
39 .....31640, 31891, 31894, 31896, 32476
71 31899

15 CFR

742 31850
745 31850
748 31620
774 31850

16 CFR

641 32410
660 31484
680 32410
681 32410
698 32410
Proposed Rules:
660 31529

17 CFR

Proposed Rules:
16 31642
240 32474
270 32688
274 32688

18 CFR

Proposed Rules:
806 31647
808 31647

20 CFR

Proposed Rules:
404 32817
405 32817
416 32817

21 CFR

16 33030
118 33030

26 CFR

Proposed Rules:
1 32818

29 CFR

Proposed Rules:
1956 33189

30 CFR

Proposed Rules:
944 32089

33 CFR

100 ....31351, 32428, 32431, 33144
110 31354
117 ....32804, 33146
138 31357
165 ....31351, 31369, 32075, 32078, 32080, 32083

Proposed Rules:
165 31900
334 32818

37 CFR

1 31372
201 32805

38 CFR

17 31373
21 31854

Proposed Rules:
17 32819
59 33192

39 CFR

3020 31374

Proposed Rules:
3050 31386

40 CFR

52 33146
180 ....32433, 32437, 32443, 32448, 32453, 33153, 33159, 33165
190 32456
271 31380
300 32084
721 32460

Proposed Rules:
51 31903
52 ....31904, 33196, 33200
60 31903
61 31903
63 ....31903, 32822
80 ....32091, 32479
81 31904
85 32479
86 32479
94 32479
260 31905
261 ....31905, 32838, 32846
271 31386
300 32092
1027 32479
1033 32479
1039 32479
1042 32479
1043 32479
1045 32479
1048 32479
1051 32479
1054 32479
1060 32479
1065 32479
1068 32479

42 CFR

Proposed Rules:
34 31798

44 CFR

64 31857

Proposed Rules:
67 ....31649, 31656, 32480

45 CFR

612 31622

46 CFR

8 32088

Proposed Rules:
535 31666

47 CFR

9 31860
52 31630
73 32466
300 31638

Proposed Rules:
Ch. 1 32093
52 31667
73 ....32102, 32489, 32490, 32856

48 CFR

Ch. 1 ....31556, 31565
2 31557
4 31561
8 31557
9 ....31557, 31561, 31564
13 31557
17 31557
36 31557
42 31557
52 31561
53 31557

Proposed Rules:
704 32857
713 32857
714 32857
715 32857
744 32857
752 32857

49 CFR

Proposed Rules:
191 31675
192 31675
193 31675
195 31675
571 31387
Ch. V 31812

50 CFR

17 32857
622 33170
648 32466
660 31874
679 32469

Proposed Rules:
17 ....31389, 32308, 32352, 32490, 32510, 32514
218 32264
300 32521
622 ....31906, 32528

LIST OF PUBLIC LAWS

This is a continuing list of public bills from the current session of Congress which have become Federal laws. It may be used in conjunction with "P L U S" (Public Laws Update Service) on 202–741–6043. This list is also available online at *http://www.archives.gov/federal-register/laws.html*.

The text of laws is not published in the **Federal Register** but may be ordered in "slip law" (individual pamphlet) form from the Superintendent of Documents, U.S. Government Printing Office, Washington, DC 20402 (phone, 202–512–1808). The text will also be made available on the Internet from GPO Access at *http://www.gpoaccess.gov/plaws/index.html*. Some laws may not yet be available.

H.R. 1777/P.L. 111–39

To make technical corrections to the Higher Education Act of 1965, and for other purposes. (July 1, 2009; 123 Stat. 1934)

S. 614/P.L. 111–40

To award a Congressional Gold Medal to the Women Airforce Service Pilots ("WASP"). (July 1, 2009; 123 Stat. 1958)

Last List July 6, 2009

Public Laws Electronic Notification Service (PENS)

PENS is a free electronic mail notification service of newly enacted public laws. To subscribe, go to *http://listserv.gsa.gov/archives/publaws-l.html*

Note: This service is strictly for E-mail notification of new laws. The text of laws is not available through this service. **PENS** cannot respond to specific inquiries sent to this address.