Federal Register

10–4–10 Monday
Vol. 75 No. 191 Oct. 4, 2010

Pages 61035–61320

The **FEDERAL REGISTER** (ISSN 0097–6326) is published daily, Monday through Friday, except official holidays, by the Office of the Federal Register, National Archives and Records Administration, Washington, DC 20408, under the Federal Register Act (44 U.S.C. Ch. 15) and the regulations of the Administrative Committee of the Federal Register (1 CFR Ch. I). The Superintendent of Documents, U.S. Government Printing Office, Washington, DC 20402 is the exclusive distributor of the official edition. Periodicals postage is paid at Washington, DC.

The **FEDERAL REGISTER** provides a uniform system for making available to the public regulations and legal notices issued by Federal agencies. These include Presidential proclamations and Executive Orders, Federal agency documents having general applicability and legal effect, documents required to be published by act of Congress, and other Federal agency documents of public interest.

Documents are on file for public inspection in the Office of the Federal Register the day before they are published, unless the issuing agency requests earlier filing. For a list of documents currently on file for public inspection, see *www.federalregister.gov.*

The seal of the National Archives and Records Administration authenticates the Federal Register as the official serial publication established under the Federal Register Act. Under 44 U.S.C. 1507, the contents of the **Federal Register** shall be judicially noticed.

The **Federal Register** is published in paper and on 24x microfiche. It is also available online at no charge as one of the databases on GPO Access, a service of the U.S. Government Printing Office.

The online edition of the **Federal Register**, *www.gpoaccess.gov/nara,* available through GPO Access, is issued under the authority of the Administrative Committee of the Federal Register as the official legal equivalent of the paper and microfiche editions (44 U.S.C. 4101 and 1 CFR 5.10). It is updated by 6 a.m. each day the **Federal Register** is published and includes both text and graphics from Volume 59, Number 1 (January 2, 1994) forward.

For more information about GPO Access, contact the GPO Access User Support Team, call toll free 1-888-293-6498; DC area 202-512-1530; fax at 202-512-1262; or via e-mail at *gpoaccess@gpo.gov.* The Support Team is available between 7:00 a.m. and 9:00 p.m. Eastern Time, Monday–Friday, except official holidays.

The annual subscription price for the **Federal Register** paper edition is $749 plus postage, or $808, plus postage, for a combined **Federal Register, Federal Register** Index and List of CFR Sections Affected (LSA) subscription; the microfiche edition of the **Federal Register** including the **Federal Register** Index and LSA is $165, plus postage. Six month subscriptions are available for one-half the annual rate. The prevailing postal rates will be applied to orders according to the delivery method requested. The price of a single copy of the daily **Federal Register,** including postage, is based on the number of pages: $11 for an issue containing less than 200 pages; $22 for an issue containing 200 to 400 pages; and $33 for an issue containing more than 400 pages. Single issues of the microfiche edition may be purchased for $3 per copy, including postage. Remit check or money order, made payable to the Superintendent of Documents, or charge to your GPO Deposit Account, VISA, MasterCard, American Express, or Discover. Mail to: U.S. Government Printing Office—New Orders, P.O. Box 979050, St. Louis, MO 63197-9000; or call toll free 1-866-512-1800, DC area 202-512-1800; or go to the U.S. Government Online Bookstore site, see *bookstore.gpo.gov.*

There are no restrictions on the republication of material appearing in the **Federal Register.**

How To Cite This Publication: Use the volume number and the page number. Example: 75 FR 12345.

Postmaster: Send address changes to the Superintendent of Documents, Federal Register, U.S. Government Printing Office, Washington, DC 20402, along with the entire mailing label from the last issue received.

SUBSCRIPTIONS AND COPIES

PUBLIC

Subscriptions:

Paper or fiche	**202–512–1800**
Assistance with public subscriptions	**202–512–1806**

General online information **202–512–1530; 1–888–293–6498**

Single copies/back copies:

Paper or fiche	**202–512–1800**
Assistance with public single copies	**1–866–512–1800 (Toll-Free)**

FEDERAL AGENCIES

Subscriptions:

Paper or fiche	**202–741–6005**
Assistance with Federal agency subscriptions	**202–741–6005**

FEDERAL REGISTER WORKSHOP

THE FEDERAL REGISTER: WHAT IT IS AND HOW TO USE IT

FOR: Any person who uses the Federal Register and Code of Federal Regulations.

WHO: Sponsored by the Office of the Federal Register.

WHAT: Free public briefings (approximately 3 hours) to present:

1. The regulatory process, with a focus on the Federal Register system and the public's role in the development of regulations.
2. The relationship between the Federal Register and Code of Federal Regulations.
3. The important elements of typical Federal Register documents.
4. An introduction to the finding aids of the FR/CFR system.

WHY: To provide the public with access to information necessary to research Federal agency regulations which directly affect them. There will be no discussion of specific agency regulations.

WHEN: Tuesday, November 9, 2010
9 a.m.–12:30 p.m.

WHERE: Office of the Federal Register
Conference Room, Suite 700
800 North Capitol Street, NW.
Washington, DC 20002

RESERVATIONS: (202) 741–6008

Printed on recycled paper.

Contents

Federal Register

Vol. 75, No. 191

Monday, October 4, 2010

Administrative Conference of the United States
NOTICES
Meetings:
Committee on Regulation, 61119

Agriculture Department
See Animal and Plant Health Inspection Service
See Food Safety and Inspection Service
See Foreign Agricultural Service

Animal and Plant Health Inspection Service
NOTICES
Withdrawal of Findings of No Significant Impact:
Interstate Movement of Garbage from Hawaii, 61121–61122

Bureau of Ocean Energy Management, Regulation and Enforcement

RULES
Reorganization of Title 30, Code of Federal Regulations, 61051–61094

Coast Guard
RULES
Drawbridge Operation Regulation:
Atlantic Intracoastal Waterway; Beaufort, SC, 61094–61096
Regulated Navigation Area:
Reserved Channel; Boston Harbor; Boston, MA, 61096–61099
Security Zones:
Captain of the Port Buffalo Zone; Technical amendment, 61099–61100

Commerce Department
See International Trade Administration
See National Oceanic and Atmospheric Administration

Comptroller of the Currency
RULES
Community Reinvestment Act Regulations, 61035–61046

Copyright Office, Library of Congress
PROPOSED RULES
Refunds Under the Cable Statutory License, 61116–61118

Defense Department
NOTICES
Privacy Act; Systems of Records, 61135–61136

Education Department
NOTICES
Agency Information Collection Activities; Proposals, Submissions, and Approvals, 61136–61138
Meetings:
Committee on Measures of Student Success, 61138

Employment and Training Administration
NOTICES
Availability of Funds and Solicitation for Grant Applications for YouthBuild Grants, 61180–61197

Energy Department
NOTICES
Meetings:
Blue Ribbon Commission on Americas Nuclear Future, Reactor and Fuel Cycle Technology Subcommittee, 61139

Environmental Protection Agency
NOTICES
Request for Nominations of Experts:
Board of Scientific Counselors, 61139–61140

Executive Office of the President
See Trade Representative, Office of United States

Federal Aviation Administration
RULES
Airworthiness Directives:
Bombardier–Rotax GmbH Type 912 F, 912 S, and 914 F Series Reciprocating Engines, 61046–61050
PROPOSED RULES
Airworthiness Directives:
Rolls–Royce plc RB211–Trent 800 Series Turbofan Engines, 61114–61116

Federal Communications Commission
RULES
Closed Captioning of Video Programming, 61101–61102
NOTICES
Meetings:
North American Numbering Council, 61140–61141

Federal Deposit Insurance Corporation
RULES
Community Reinvestment Act Regulations, 61035–61046

Federal Emergency Management Agency
NOTICES
Agency Information Collection Activities; Proposals, Submissions, and Approvals:
Mitigation Grants Program / eGrants, 61161–61162

Federal Reserve System
RULES
Community Reinvestment Act Regulations, 61035–61046

Federal Trade Commission
NOTICES
Analysis of Agreement Containing Consent Order to Aid Public Comment:
In the Matter of The Coca–Cola Co., 61141–61143

Fiscal Service
NOTICES
Surety Companies Acceptable on Federal Bonds:
Darwin National Assurance Co., 61246–61247

Fish and Wildlife Service
NOTICES
Environmental Assessments; Availability, etc.:
Iroquois National Wildlife Refuge, Genesee County and Orleans County, NY, 61171–61173

Meetings:
Aquatic Nuisance Species Task Force, 61175

Food and Drug Administration
NOTICES
Food and Drug Administration Modernization Act of 1997:
Modifications to the List of Recognized Standards, Recognition List Number 025, 61148–61157

Food Safety and Inspection Service
NOTICES
Meetings:
Codex Alimentarius Commission; Codex Committee on Food Hygiene, 61119–61120

Foreign Agricultural Service
NOTICES
Trade Adjustment Assistance for Farmers, 61121

Foreign Assets Control Office
NOTICES
Persons Whose Property and Interests in Property Are Blocked:
Additional Identifying Information Associated With Persons Pursuant to Executive Order 13551, Blocking Property of Certain Persons With Respect to North Korea, 61246

Government Accountability Office
NOTICES
Financial Management and Assurance:
Government Auditing Standards; Correction, 61143

Health and Human Services Department
See Food and Drug Administration
See Health Resources and Services Administration
See National Institutes of Health
See Substance Abuse and Mental Health Services Administration
NOTICES
Meetings:
Advisory Committee on Blood Safety and Availability, 61143–61144

Health Resources and Services Administration
NOTICES
Statement of Organization, Functions and Delegations of Authority, 61157–61160

Homeland Security Department
See Coast Guard
See Federal Emergency Management Agency
See U.S. Customs and Border Protection
NOTICES
Meetings:
National Infrastructure Advisory Council, 61160–61161

Housing and Urban Development Department
NOTICES
Buy American Exceptions under the American Recovery and Reinvestment Act of 2009, 61163–61164
Credit Watch Termination Initiative:
Termination of Direct Endorsement Approval, 61165–61166
Termination of Origination Approval Agreements, 61164–61165
Delegation and Redelegation of Authority for the Office of the Inspector General, 61166–61167
Final Fair Market Rents for Fiscal Year 2011:
Housing Choice Voucher Program and Moderate Rehabilitation Single Room Occupancy Program, 61254–61319
Funding Availabilities:
Fiscal Year 2010 Asthma Interventions in Public and Assisted Multifamily Housing, 61168
Fiscal Year 2010 Healthy Homes Production Program, 61168
Fiscal Year 2010 Housing Counseling Training Program, 61167–61168
Fiscal Year 2010 Lead Technical Studies and Healthy Homes Technical Studies Programs, 61168–61169
Privacy Act; Systems of Records, 61169–61171

Interior Department
See Bureau of Ocean Energy Management, Regulation and Enforcement
See Fish and Wildlife Service
See National Park Service
See Office of Natural Resources Revenue

Internal Revenue Service
NOTICES
Agency Information Collection Activities; Proposals, Submissions, and Approvals, 61240–61246

International Trade Administration
NOTICES
Amended Final Results of Antidumping Duty Administrative Review:
Certain Frozen Warmwater Shrimp from the Socialist Republic of Vietnam, 61122–61126
Decision on Applications for Duty-Free Entry of Scientific Instruments:
Virginia Commonwealth University, School of Medicine, 61126
Extension of Time Limit for Final Results of the Antidumping Duty Administrative Review:
Certain Activated Carbon from the People's Republic of China, 61126–61127
Extension of Time Limit for the Final Results of the New Shipper Antidumping Duty Review:
Non-Frozen Apple Juice Concentrate from the People's Republic of China, 61127
Final Results of Antidumping Duty Administrative Review:
Light-Walled Rectangular Pipe and Tube from Turkey, 61127–61128
Polyethylene Retail Carrier Bags From Malaysia, 61128–61130
Final Results of New Shipper Review:
Fresh Garlic from the People's Republic of China, 61130–61132
Initiation of Antidumping Duty New Shipper Review:
Certain Steel Nails from the People's Republic of China, 61132–61133

International Trade Commission
NOTICES
Antidumping Investigations:
Polyvinyl Alcohol from Taiwan, 61175–61176
Terminations of Investigations:
Certain Stringed Musical Instruments and Components Thereof, 61177

Labor Department
See Employment and Training Administration
See Labor Statistics Bureau

NOTICES
Agency Information Collection Activities; Proposals, Submissions, and Approvals:
Contractor Survey under the Federal Employees Compensation Act, 61177–61178

Labor Statistics Bureau
NOTICES
Agency Information Collection Activities; Proposals, Submissions, and Approvals, 61178–61180

Library of Congress
See Copyright Office, Library of Congress

Millennium Challenge Corporation
NOTICES
Entering into a Compact with the Republic of the Philippines, 61197–61216
Report on the Selection of Eligible Countries for Fiscal Year 2011, 61216–61219

National Aeronautics and Space Administration
NOTICES
Meetings:
Aerospace Safety Advisory Panel, 61219

National Institutes of Health
NOTICES
Meetings:
Center for Scientific Review; Amendment, 61157
National Institute on Aging, 61157

National Oceanic and Atmospheric Administration
RULES
Magnuson–Stevens Act Provisions; Fisheries off West Coast States; Pacific Coast Groundfish Fishery:
Inseason Adjustments to Fishery Management Measures, 61102–61113
NOTICES
Permits:
Endangered Species; File No. 14176, 61133
Marine Mammals and Endangered Species File Nos. 8081735, 14233, 14506, 14603, and 14726, 61133–61135

National Park Service
NOTICES
Environmental Impact Statements; Availability, etc.:
Jackson Hole Airport Agreement Extension; Grand Teton National Park, WY, 61173
Warner Valley Comprehensive Site Plan; Lassen Volcanic National Park, Plumas County, CA, 61174–61175

Nuclear Regulatory Commission
NOTICES
Environmental Assessments; Availability, etc.:
Energy Northwest, Columbia Generating Station, 61225–61226
Entergy Operations, Inc.; River Bend Station, Unit 1, 61219–61220
Massachusetts Institute of Technology Research Reactor, 61220–61225
Exemptions:
Entergy Operations, Inc.; Arkansas Nuclear One, Units 1 and 2, 61226–61227
Meetings:
Advisory Committee on Reactor Safeguards Subcommittee on Future Plant Designs; Revision, 61227
Meetings; Sunshine Act, 61227–61228

Nuclear Waste Technical Review Board
NOTICES
Meetings:
Technical Lessons Gained High-Level Nuclear Waste Disposal Efforts, 61228

Office of Natural Resources Revenue
RULES
Reorganization of Title 30, Code of Federal Regulations, 61051–61094

Office of United States Trade Representative
See Trade Representative, Office of United States

Public Debt Bureau
See Fiscal Service

Securities and Exchange Commission
RULES
Removal of Exemption for Credit Rating Agencies from Regulation FD, 61050–61051
NOTICES
Applications:
Elfun Trusts, et al., 61230–61232
RIEF RMP LLC and Renaissance Technologies LLC, 61232–61237
Meetings; Sunshine Act, 61237
Self-Regulatory Organizations; Proposed Rule Changes:
Chicago Board Options Exchange, 61237–61238

Small Business Administration
NOTICES
Agency Information Collection Activities; Proposals, Submissions, and Approvals, 61228–61229
Disaster Declarations:
Ohio, 61229
South Dakota, 61229–61230

State Department
NOTICES
Culturally Significant Objects Imported for Exhibition Determinations:
Expanding the Story with Four Greek Vases, 61238–61239

Substance Abuse and Mental Health Services Administration
NOTICES
Agency Information Collection Activities; Proposals, Submissions, and Approvals, 61144–61148

Thrift Supervision Office
RULES
Community Reinvestment Act Regulations, 61035–61046
NOTICES
Approvals of Conversion Applications:
Kaiser Federal Financial Group, Inc., Covina, CA, 61246

Trade Representative, Office of United States
NOTICES
Request for Public Comments:
Annual Review of Country Eligibility for Benefits Under the African Growth and Opportunity Act, 61239–61240

Transportation Department
See Federal Aviation Administration

Treasury Department
See Comptroller of the Currency
See Fiscal Service
See Foreign Assets Control Office
See Internal Revenue Service
See Thrift Supervision Office

U.S. Customs and Border Protection
NOTICES
Agency Information Collection Activities; Proposals, Submissions, and Approvals:
Application for Exportation of Articles under Special Bond, 61162–61163

Veterans Affairs Department
NOTICES
Agency Information Collection Activities; Proposals, Submissions, and Approvals:
Annual Certification of Veteran Status and Veteran-Relatives, 61249
Application for Accrued Amounts Due a Deceased Beneficiary, 61248
Create Payment Request for the VA Funding Fee Payment System; A Computer Generated Funding Fee Receipt, 61252
Declaration of Status of Dependents, 61247
Notice to Department of Veterans Affairs of Veteran or Beneficiary Incarcerated in Penal Institution, 61247–61248
Pension Claim Questionnaire for Farm Income, 61248–61249
Request for Employment Information in Connection with Claim for Disability Benefits, 61251
Statement of Dependency of Parent(s), 61251–61252
Submission of School Catalog to the State Approving Agency, 61250–61251
VA Request for Determination of Reasonable Value, 61249–61250

Separate Parts In This Issue

Part II
Housing and Urban Development Department, 61254–61319

Reader Aids
Consult the Reader Aids section at the end of this page for phone numbers, online resources, finding aids, reminders, and notice of recently enacted public laws.

To subscribe to the Federal Register Table of Contents LISTSERV electronic mailing list, go to http://listserv.access.gpo.gov and select Online mailing list archives, FEDREGTOC-L, Join or leave the list (or change settings); then follow the instructions.

CFR PARTS AFFECTED IN THIS ISSUE

A cumulative list of the parts affected this month can be found in the Reader Aids section at the end of this issue.

12 CFR
25 61035
228 61035
345 61035
563e 61035

14 CFR
39 61046

Proposed Rules:
39 61114

17 CFR
243 61050

30 CFR
201 61051
202 61051
203 61051
204 61051
206 61051
207 61051
208 61051
210 61051
212 61051
217 61051
218 61051
219 61051
220 61051
227 61051
228 61051
229 61051
241 61051
243 61051
290 61051
1201 61051
1202 61051
1203 61051
1204 61051
1206 61051
1207 61051
1208 61051
1210 61051
1212 61051
1217 61051
1218 61051
1219 61051
1220 61051
1227 61051
1228 61051
1229 61051
1241 61051
1243 61051
1290 61051

33 CFR
117 61094
165 (2 documents) 61096, 61099

37 CFR

Proposed Rules:
201 61116

47 CFR
79 61101

50 CFR
660 61102

Rules and Regulations

Federal Register

Vol. 75, No. 191

Monday, October 4, 2010

This section of the FEDERAL REGISTER contains regulatory documents having general applicability and legal effect, most of which are keyed to and codified in the Code of Federal Regulations, which is published under 50 titles pursuant to 44 U.S.C. 1510.

The Code of Federal Regulations is sold by the Superintendent of Documents. Prices of new books are listed in the first FEDERAL REGISTER issue of each week.

DEPARTMENT OF THE TREASURY

Office of the Comptroller of the Currency

12 CFR Part 25

[Docket ID OCC–2010–0014]

RIN 1557–AD24

FEDERAL RESERVE SYSTEM

12 CFR Part 228

[Docket No. R–1360]

FEDERAL DEPOSIT INSURANCE CORPORATION

12 CFR Part 345

RIN 3064–AD45

DEPARTMENT OF THE TREASURY

Office of Thrift Supervision

12 CFR Part 563e

[Docket ID OTS–2010–0023]

RIN 1550–AC35

Community Reinvestment Act Regulations

AGENCIES: Office of the Comptroller of the Currency, Treasury (OCC); Board of Governors of the Federal Reserve System (Board); Federal Deposit Insurance Corporation (FDIC); Office of Thrift Supervision, Treasury (OTS).

ACTION: Joint final rule.

SUMMARY: The OCC, Board, FDIC, and OTS (collectively, "the Agencies") are issuing this joint final rule, which revises our rules implementing the Community Reinvestment Act (CRA). The rule implements the statutory requirement that the Agencies consider low-cost education loans provided by the financial institution to low-income borrowers as a factor when assessing an institution's record of meeting community credit needs. The final rule also incorporates the statutory provision that allows the Agencies to consider capital investment, loan participation, and other ventures undertaken by nonminority-owned and nonwomen-owned financial institutions in cooperation with minority- and women-owned financial institutions and low-income credit unions as a factor when assessing an institution's CRA record.

DATES: *Effective Date:* November 3, 2010.

FOR FURTHER INFORMATION CONTACT:

OCC: Margaret Hesse, Special Counsel, Community and Consumer Law Division, (202) 874–5750; or Gregory Nagel, National Bank Examiner, Compliance Policy, (202) 874–4428, Office of the Comptroller of the Currency, 250 E Street, SW., Washington, DC 20219.

Board: Rebecca Lassman, Supervisory Consumer Financial Services Analyst, (202) 452–2080; or Brent Lattin, Senior Attorney, (202) 452–3667, Division of Consumer and Community Affairs, Board of Governors of the Federal Reserve System, 20th Street and Constitution Avenue, NW., Washington, DC 20551.

FDIC: Janet R. Gordon, Senior Policy Analyst, Division of Supervision and Consumer Protection, Compliance Policy Branch, (202) 898–3850; or Susan van den Toorn, Counsel, Legal Division, (202) 898–8707, Federal Deposit Insurance Corporation, 550 17th Street, NW., Washington, DC 20429.

OTS: Stephanie M. Caputo, Senior Compliance Program Analyst, Compliance and Consumer Protection, (202) 906–6549; or Richard Bennett, Senior Compliance Counsel, Regulations and Legislation Division, (202) 906–7409, Office of Thrift Supervision, 1700 G Street, NW., Washington, DC 20552.

SUPPLEMENTARY INFORMATION:

Background

The Community Reinvestment Act (CRA) requires the federal banking and thrift regulatory agencies to assess the record of each insured depository institution (hereinafter, "institution") in meeting the credit needs of its entire community, including low- and moderate-income neighborhoods, consistent with the safe and sound operation of the institution, and to take that record into account when the agency evaluates an application by the institution for a deposit facility.[1] The Agencies have promulgated substantially similar regulations to implement the requirements of the CRA.[2]

Notice of Proposed Rulemaking

On June 30, 2009, the Agencies published a joint notice of proposed rulemaking that would incorporate two statutory requirements into the CRA regulations.[3] The first revision would implement section 1031 of the Higher Education Opportunity Act, Public Law 110–315, 122 Stat. 3078 (August 14, 2008) (the "HEOA"), which amended the CRA. This provision requires the Agencies to consider low-cost education loans provided by the institution to low-income borrowers as a factor when evaluating an institution's record of meeting community credit needs. 12 U.S.C. 2903(d). The second revision would incorporate 12 U.S.C. 2903(b), which allows the Agencies to consider and take into account nonminority- and nonwomen-owned financial institutions' activities in connection with minority- and women-owned financial institutions and low-income credit unions.

Twenty-four different commenters provided their views to the Agencies on the proposed revisions. The commenters represented financial institutions, financial institution trade organizations, community or consumer organizations, and others.

Low-Cost Education Loans to Low-Income Borrowers

Background and General Comments

Under existing CRA regulations, education loans are evaluated as consumer loans.[4] An institution's consumer lending must be evaluated if consumer lending makes up a substantial majority of an institution's business. Institutions that do not meet

[1] 12 U.S.C. 2903.

[2] *See* 12 CFR parts 25 (OCC), 228 (Board), 345 (FDIC), and 563e (OTS).

[3] 74 FR 31209 (Jun. 30, 2009).

[4] "Consumer loan" is defined in the CRA regulations as a loan to one or more individuals for household, family, or other personal expenditures. Consumer loans include the following categories of loans: motor vehicle loans, credit card loans, home equity loans, other secured consumer loans, and other unsecured consumer loans. 12 CFR 25.12(j), 228.12(j), 345.12(j), and 563e.12(j).

this criterion may choose to have consumer loans evaluated when the institution's CRA record is being examined. Institutions must collect and maintain data about consumer loans if they choose to have those loans evaluated.[5] Like other consumer loans, institutions' education loans are generally evaluated by total number and amount; borrower characteristics (*i.e.,* distribution among borrowers of different income levels); geographic distribution (*i.e.,* distribution among borrowers in geographies with different income levels and whether the loans are made to borrowers in the institution's assessment areas); and, for large retail institutions, whether the education loan program is innovative or flexible in addressing the credit needs of low- or moderate-income individuals or geographies.[6] This revised rule does not change the eligibility of education loans to be treated as consumer loans. Rather, the revised rule amends the general performance rules in 12 CFR 25.21, 228.21, 345.21, and 563e.21 to implement the requirements of section 1031 of the HEOA. If an institution's education loans do not qualify for CRA consideration under section 1031 of the HEOA and this implementing rule, the institution continues to be able to receive consideration under existing standards applicable to consumer loans.

Section 1031 of the HEOA revised the CRA to *require* the Agencies to consider low-cost education loans provided by the institution to low-income borrowers as a factor when evaluating an institution's record of meeting community credit needs.[7] The legislative history indicates that the provision was intended to provide incentives for lenders to provide low-cost education loans to low-income borrowers.[8]

Consistent with the supplemental information accompanying the proposed rule, under the final rule as implemented by the Agencies, institutions will receive favorable qualitative consideration for originating "low-cost education loans to low-income borrowers" as a factor in the institutions' overall CRA rating. Such loans would be considered responsive to the credit needs of the institutions' communities.[9]

The Proposal

The Agencies proposed to consider low-cost education loans provided by the institution to borrowers in its assessment area(s) who have an individual income that is less than 50 percent of the area median income. Further, the Agencies proposed to define "low-cost education loans" to mean (1) education loans originated by an institution through a U.S. Department of Education loan program; or (2) any private education loan as defined in the Truth in Lending Act, including loans under a state or local education loan program, originated by an institution for a student at an "institution of higher education," with interest rates and fees no greater than those of comparable education loans offered through loan programs of the U.S. Department of Education.

Under the first prong of the proposed definition, any loans that institutions make through a Department of Education loan program, such as the Federal Family Education Loan (FFEL) Program, would be considered "low-cost education loans."

Under the second prong of the proposed definition, "private education loans" that institutions make would be considered "low-cost education loans," provided that the interest rates and fees are no greater than those of comparable education loans offered through loan programs of the U.S. Department of Education.

The Agencies also proposed a conforming amendment to Appendix A of the regulations to include consideration of a financial institution's low-cost education loans to low-income borrowers as a factor when assigning a rating to the institution.

The Agencies asked for comment on a number of areas related to the proposed definition.

General Comment About Education Lending by Financial Institutions

Several commenters noted that education lending, particularly private education lending, is a specialized type of lending engaged in by only a few financial institutions. These commenters requested that the Agencies expressly state that the final rule does not require institutions to make low-cost education loans, or, for that matter, education loans generally. The Agencies agree that the intent of the revision is to encourage, but not to require, financial institutions to make low-cost education loans to low-income borrowers and provide an incentive to do so.

Scope of "Education Loans"

Education Loans—The Proposal

The HEOA amendment to the CRA specifies that the Agencies must consider low-cost "education loans" to low-income borrowers.[10] The Agencies proposed to define education loans as including loans originated by financial institutions through a program of the U.S. Department of Education. The Agencies also proposed to define education loans to include low-cost private education loans, including loans under State or local education loan programs.

As discussed in the preamble to the proposed rule, in defining private education loans, the Agencies proposed to adopt the terms "private education loan," "private educational lender," and "postsecondary educational expenses," each of which is defined in the HEOA in the context of the Truth in Lending Act (TILA). Section 1011 of the HEOA added section 140 of TILA to provide the following definition:

> [T]he term "private education loan"—
> (A) Means a loan provided by a private educational lender that—
> (i) Is not made, insured, or guaranteed under title IV of the Higher Education Act of 1965 (20 U.S.C. 1070 *et seq.*); and
> (ii) Is issued expressly for postsecondary educational expenses to a borrower, regardless of whether the loan is provided through the educational institution that the subject student attends or directly to the borrower from the private educational lender; and
> (B) Does not include an extension of credit under an open end consumer credit plan, a reverse mortgage transaction, a residential mortgage transaction, or any other loan that is secured by real property or a dwelling.[11]

In turn, the HEOA defines a "private educational lender" to include, among others, any financial institution that solicits, makes, or extends private education loans.[12]

The HEOA defines "postsecondary educational expenses" to mean any of the expenses that are included as part of the cost of attendance of a student, as defined under section 472 of the Higher Education Act of 1965 (20 U.S.C. 1087ll). That definition includes tuition and fees, books, supplies, miscellaneous personal expenses, room and board, and

[5] *See* 12 CFR 25.22(a)(1) and 25.42(c); 12 CFR 228.22(a)(1) and 228.42(c); 12 CFR 345.12(a)(1) and 345.42(c); and 12 CFR 563e.22(a)(1) and 563e.42(c).

[6] *See, e.g.,* 12 CFR 25.22 and 25.26; 228.22 and 228.26, 345.22 and 345.26, and 563e.22 and 563.26.

[7] 12 U.S.C. 2903(d).

[8] H.R. Rep. No. 110–500 at 297 (2007). *See also Private Student Lending: Hearing before the Senate Comm. on Banking, Housing, and Urban Affairs,* 110th Cong. (2007) (comment by Sen. Dodd: "It strikes me that we should be promoting, of course, incentives for lenders to provide the neediest students with good loans, loans, in my mind, that are similar in rate and fee structure to those under the federal loan program.") (transcript available through CQ Congressional Transcripts, Congressional Hearings, Jun. 6, 2007).

[9] 74 FR at 31214.

[10] 12 U.S.C. 2903(d) (as added by section 1031 of the HEOA).

[11] Section 140(a)(7) of the Truth in Lending Act, as added by section 1011 of the HEOA.

[12] Section 140(a)(6)(A) of the Truth in Lending Act, as added by section 1011 of the HEOA.

an allowance for any loan fee, origination fee, or insurance premium charged to a student or parent for a loan incurred to cover the cost of the student's attendance.[13]

Although section 1031 of the HEOA is not expressly limited to loans for higher education, the Agencies proposed to include this limitation in the definition of low-cost private education loans. Thus, the Agencies proposed that the private education loan definition would encompass loans made for expenses incurred at any "institution of higher education" as that term is generally defined in sections 101 and 102 of the Higher Education Act of 1965 (HEA), 20 U.S.C. 1001 and 1002. Such institutions generally include accredited public or nonprofit colleges and vocational schools, accredited private colleges and vocational schools, and certain foreign institutions offering postsecondary education that are comparable to institutions of higher education in the United States based on standards approved by the U.S. Department of Education. The Agencies did not propose to cover unaccredited colleges, universities, or vocational schools because they lacked sufficient information regarding these institutions, but solicited comment on this issue.

Based on these definitions and considerations, under the proposed rule, financial institutions would receive CRA consideration for making private (non-Federal) closed-end education loans, not secured by real property or a dwelling, for post-secondary educational expenses at an institution of higher education. They would also receive consideration for making education loans through a program of the U.S. Department of Education.

Comments and Final Rule

As discussed above, the Agencies proposed to define education loans as including loans originated by financial institutions through a program of the U.S. Department of Education, such as the Federal Family Education Loan (FFEL) Program. As of July 1, 2010, no new loans may be made or insured under the FFEL program, and no new funds may be appropriated or expended to make or insure such loans.[14] Thus, the final rule does not include in the definition of education loans any reference to the FFEL program.

The proposed definition of "private education loan" included only loans made for post-secondary (beyond high school) educational expenses, not for primary or elementary education. The Agencies sought comment on whether coverage should be limited in this manner. Most commenters who addressed the issue, including financial institutions, trade associations, and community groups, supported the Agencies' proposal to limit the definition of private education loans to loans made for post-secondary education expenses. These commenters agreed that the amendment to the CRA statute should be viewed in light of the HEOA's overall purpose of promoting post-secondary education affordability. One trade association supported the proposal, but encouraged the Agencies to consider expanding the scope at a later time to include vocational and career training.[15] One financial institution suggested that coverage should be as broad as possible and should include all types of education, including primary and secondary education.

The final rule covers only loans made for higher education expenses, not for primary or secondary education expenses. As the preamble to the proposed rule explained, the statutory requirement to consider education loans under the CRA was adopted as a part of the HEOA, which specifically addresses higher education reform. The purpose of H.R. 4137, which introduced the incentive of CRA consideration for low-cost education loans was "to make college more affordable and accessible;" to "expand college access and support for low-income and minority students;" and to provide incentives for lenders to provide "low-cost *private student loans* to low-income borrowers."[16]

Higher Education Institutions—The Proposal

In defining the types of higher education institutions covered, the Agencies proposed to include "institutions of higher education" as defined in sections 101 and 102 of the HEA, 20 U.S.C. 1001–1002. The Agencies requested comment on whether the scope of the definition should be narrowed to encompass only loans made for education expenses at an "institution of higher education" as that term is defined for general purposes in section 101 of the HEA, 20 U.S.C. 1001, which is limited generally to accredited public and nonprofit colleges, universities, and employment training schools in the United States.[17] The Agencies also requested comment on whether, alternatively, the scope of the educational institutions covered should be expanded to include unaccredited institutions that would not meet the definition of "institution of higher education" under the HEA but would be covered by the definition of "covered educational institution" under TILA section 140(a)(1).

Comments and Final Rule

Commenters generally opposed using the narrower definition of "institution of higher education" found in section 101 of the HEA because it would exclude some institutions providing vocational and career training. The Agencies agree that, consistent with the HEOA's purpose, eligible schools should include the broad range of accredited institutions under the definition of "institution of higher education," including accredited vocational institutions that provide educational programs that prepare students for gainful employment in a recognized profession.

Community group commenters opposed expanding coverage to include unaccredited institutions, citing a concern about providing CRA credit for student loans to finance inadequate, unaccredited training programs. Financial institution and trade group commenters were split. Those who supported the proposal expressed similar concerns that degrees from unaccredited institutions may not be acceptable for certain positions such as federal or state civil service positions or other employment. One commenter did, however, request that the Agencies publish a list of accredited programs.[18] By contrast, commenters who supported expanding coverage to include

[13] *See* 20 U.S.C. 1087ll (definition of "cost of attendance").

[14] Health Care and Education Reconciliation Act of 2010, Public Law 111–152 (2010).

[15] The Agencies note, however, that many such institutions are covered under the definition of "institution of higher education" discussed below, and loans to their students could qualify for CRA consideration under this provision if other applicable criteria are met.

[16] H.R. Rep. No. 110–500 at 203, 297 (2007) (emphasis added).

[17] If the Agencies were to restrict the definition of "institution of higher education" to only those institutions defined in section 101 of the HEA, loans to cover educational expenses at for-profit institutions of higher education, some post-secondary vocational institutions that provide training to prepare students for employment in a recognized occupation, and some U.S. Department of Education-approved institutions located outside the United States would not qualify for consideration.

[18] The Agencies note that the U.S. Department of Education provides a database of post-secondary educational institutions and programs that are, or were, accredited by an accrediting agency or state approval agency recognized by the Secretary of Education as a "reliable authority as to the quality of postsecondary education" within the meaning of the HEA at *http://ope.ed.gov/accreditation.* The Department of Education recommends that the database be used as one source of qualitative information and that additional sources of qualitative information be consulted.

unaccredited institutions encouraged the Agencies to provide maximum flexibility to financial institutions to provide a wide range of education loans.

The Agencies are adopting the scope of higher education institutions as proposed. As noted above, the Agencies believe that the broader definition of "institution of higher education," including accredited vocational institutions, provides flexibility to financial institutions, while limiting the definition to accredited institutions will help ensure that such programs benefit students. The Agencies will consider, as a factor, low-cost education loans to low-income borrowers to attend institutions of higher education, as defined in sections 101 and 102 of the HEA, 20 U.S.C. 1001–1002, when evaluating a financial institution under the CRA.

Private Education Loans—The Proposal

As discussed above, the Agencies proposed to consider low-cost private education loans made to low-income borrowers, as well as loans provided to low-income borrowers by a financial institution under a Federal education program. The Agencies requested comment on whether private education loans not made, insured, or guaranteed under a Federal, state, or local education program should be considered for CRA purposes.

Comments and Final Rule

Although one commenter stated that private education loans should not be considered because a private loan to a student may not guarantee that the funds are used for education, many commenters strongly believed that private loans should be considered. In fact, several commenters noted that if then pending legislation in Congress were passed, private lenders would no longer be involved in Department of Education loan programs.[19]

These commenters noted that many students and families are unable to cover the full cost of an education relying only on government programs and may need to pursue other types of funding to complete their education. Consequently, these commenters encouraged the Agencies to allow CRA consideration for non-governmental low-cost private education loans. The Agencies note that the HEOA's purpose was, in significant part, to provide an incentive to financial institutions to provide low-cost private education loans to low-income borrowers not currently served by education loan programs.

[19] H.R. 3221, 111th Cong., 1st Sess. (2009).

The Agencies also considered whether CRA consideration is necessary for loans made by financial institutions under the Federal education programs. Federal program education loans generally subjected an institution to little or no risk and, therefore, already provided an incentive to lenders. However, because as of July 1, 2010, financial institutions may no longer originate education loans under the Federal program,[20] the final rule does not provide for CRA consideration of such loans under § 1031 of HEOA. However, if an institution has made education loans under the Federal program, it would be able to receive consideration for those loans under existing standards applicable to consumer loans.

State or Local Government-Sponsored Education Loans—The Proposal

The Agencies proposed to treat education loans offered to low-income borrowers under state or local government education programs the same as all other private education loans, consistent with the definition of "private education loans" in section 140(a)(7) of the Truth in Lending Act, which includes education loans made by financial institutions under local and state education loan programs. The Agencies asked whether all education loans offered to low-income borrowers under state or local education programs, regardless of whether the fees and rates are greater than those under comparable Department of Education programs, should be eligible for CRA consideration.

Comments and Final Rule

Only three commenters addressed this question. One commenter advised that the Agencies should use consistent measures among all private education loan programs, without favoring state and local programs. A second commenter believed that rates and fees on loans made by an institution under state or local education programs would not have to be exactly the same, but should be reasonably comparable to rates and fees on loans made under the Department of Education programs. The third commenter believed that all education loans offered to low-income borrowers and families under state or local programs, regardless of whether the rates and fees are comparable to those under Department of Education programs, should be eligible for CRA consideration.

[20] Title II, Health Care and Education Reconciliation Act of 2010, Public Law 111–152 (2010).

After a review of the comments, the Agencies have adopted the language in the provision regarding state or local education programs as proposed. The Agencies are not aware of any state or local education loan programs that are targeted or available to low-income students in which costs are limited in a manner similar to the Federal direct loan program, and for which an alternative definition of "low-cost" might be appropriate.

Types of Loans—The Proposal

The proposed definition of a private education loan was limited to closed-end loans not secured by real property or a dwelling originated by a financial institution.

Comments and Final Rule

Community group commenters supported limiting coverage in this manner noting a concern about using a home as collateral for an education loan. One financial institution commenter also supported the proposed limitation, noting that there may be operational difficulties determining whether a dwelling-secured loan was used for educational expenses. By contrast, other financial institution and trade group commenters encouraged the Agencies to broaden the scope of the private education loan definition to include open-end or dwelling-secured credit, noting that consumers use these types of credit to fund educational expenses. These commenters requested that the Agencies provide flexibility to financial institutions by including such types of credit.

The definition of education loan in the final rule incorporates the TILA definition of that term, which excludes open-end credit and credit secured by real property or a dwelling. As discussed more fully below, the HEOA amended both the CRA to provide an incentive for financial institutions to make low-cost education loans and TILA to provide for new disclosures and additional consumer protections for private education loans. The Agencies believe that in order for financial institutions to receive consideration under the CRA for an education loan, it is appropriate that such loans also be covered by the new disclosures and other substantive restrictions added to TILA by the HEOA. Therefore the Agencies are adopting the definition of private education loan as used in section 140(a)(7) of TILA.

Some community group commenters suggested that the Agencies place further conditions on the types of loans that could be eligible for CRA consideration. For example,

commenters suggested that the Agencies provide consideration only for loans that meet a standard of affordability and provide certain consumer protections such as income-based repayment plans, fixed interest rates, and no prepayment penalties.

The final rule does not impose additional restrictions on education loans for purposes of CRA consideration because the Agencies have limited the types of loans eligible for CRA consideration to those covered under the new TILA protections in the HEOA. For example, the HEOA requires that consumers receive disclosures regarding private education loans that explain the terms and costs of those loans on or with an application, after the consumer is approved for the loan, and before funds are disbursed. The disclosures also provide consumers with information about federal student loan alternatives where applicable. Consumers are provided 30 days after a private education loan is approved in which to accept the offer and the lender is prohibited, with few exceptions, from making changes to the rate or terms of the loan during that time. Consumers are also provided with three days in which to cancel a loan after receiving the final TILA disclosure.[21] In addition, the HEOA places restrictions on private education loan terms and on private educational lenders. For example, the HEOA specifically prohibits prepayment penalties for private education loans. The HEOA also amended TILA to prohibit practices such as revenue sharing and co-branding between private educational lenders and educational institutions.[22]

The Agencies also requested comment on whether to limit consideration to loans originated by the financial institution, as proposed, or to consider loans purchased by the institution. Community group commenters opposed providing consideration for purchased loans, stating a concern that purchasing loans does not significantly expand the capacity of financial institutions to offer additional loans. By contrast, financial institution commenters supported allowing consideration for purchased loans, consistent with other types of CRA-eligible loans.

The final rule limits consideration to low-cost education loans originated by the financial institution, and not to purchased loans. As discussed above, the Agencies believe that the intent of the HEOA amendment to the CRA was to provide an incentive to financial institutions to originate loans to low-income borrowers currently not reached by most private loan programs. The Agencies believe that providing consideration only for loans originated by the financial institution provides an incentive to financial institutions to develop education loan programs that are tailored to the specific need targeted by the statutory amendment.

"Low-Cost Education Loans"

The Proposal

The Agencies proposed to define "low-cost education loans" as education loans that are originated by financial institutions through a program of the U.S. Department of Education; or any private education loans, including loans under state or local education loan programs, originated by financial institutions with interest rates and fees no greater than those of comparable education loan programs offered by the U.S. Department of Education.

The proposal would have looked to guaranteed education loans provided by financial institutions through the U.S. Department of Education's Federal Family Education Loan Program (FFEL loans) as being the comparable education loan program.

Comments and Final Rule

The Agencies asked whether the proposed definition of the term "low-cost education loans" is appropriate and, if not, how the Agencies should define "low-cost education loans." Commenters representing community organizations generally agreed with the proposed definition that private education loans receiving CRA consideration should have interest rates and fees no greater than comparable loans offered through the Department of Education. In fact, the same commenters stated that, to maintain consistency with the purpose of the HEOA to make college affordable, the lowest rates and fees should be used.

Although commenters representing financial institutions and their trade organizations generally agreed that loans made by financial institutions under Department of Education programs should be considered low-cost, they raised concerns about requiring the rates and fees on private education loans to be comparable to the rates and fees applicable to Department of Education loans. In particular, they noted the substantial differences between loans made by financial institutions under Department of Education programs and private education loans in terms of risks, costs, and pricing. For example, commenters noted that FFEL education loans have a 97 percent guarantee against default and that a lender's yield is not tied to the fixed interest rate paid by the borrower, but rather is based on a separate formula set in statute. By contrast, private education loans generally have a variable rate determined by an index, such as Prime or one- or three-month LIBOR, and a margin, which typically varies depending on a borrower's creditworthiness. In addition, the lender assumes all of the risk of default on a private education loan.

Several of the commenters representing financial institutions or their trade groups suggested that the Agencies should develop a formula, based on an index and a margin, to define low-cost, variable rate private education loans. Commenters suggested one-month or three-month LIBOR or Prime as possible rates to use as an index. Margin suggestions varied from three to eight percent. Commenters also suggested that upfront fees of up to four percent would be appropriate.

The Agencies also asked how to determine whether a private education loan is comparable to a Department of Education loan and whether the lowest or highest rate and fees available under the comparable Department of Education program should be used to determine whether a private education loan is low cost. Although few commenters addressed these questions, the views of the commenters that did respond were mixed. Commenters suggested both that it is necessary to use the lowest rates and fees, as well as that the higher rate should serve as the maximum permissible rate for private loans. Industry commenters reasserted that it is not appropriate to evaluate whether a private education loan is "low-cost" based on rates and fees applicable to federal education loans.

The Agencies have considered these comments carefully. The Agencies considered various options with regard to a definition of a "low-cost" private education loan that could address these concerns. For example, the Agencies considered whether a low-cost private education loan should be defined with a rate that is 100 to 300 basis points over a Federal loan rate. However, we did not receive comments that identified a standard benchmark, margin, or number of basis points to be used as an alternative formula for "low cost."

After consideration of the comments and recent changes in the law described above, the Agencies have revised the rule to refer solely to the Federal direct loan program of the U.S. Department of

[21] Section 128(e) of the Truth in Lending Act, as added by section 1021 of the HEOA.

[22] Section 140(e) of the Truth in Lending Act, as added by section 1011 of the HEOA.

Education as the benchmark for "low cost" education loans.

To determine whether education loans have rates and terms that are no greater than the rates and terms on loans made under the Federal direct loan program, education loans will be compared with comparable direct loans. For example, fixed-rate loans will be compared to fixed-rate Federal loans, variable-rate loans will be compared to variable-rate Federal loans, loans to students will be compared to Federal loans to students, and loans to parents will be compared to Federal loans to parents. The Agencies note that most education loans originated by financial institutions have a variable rate.

The direct loan program formally called the William D. Ford Federal Direct Loan Program is the program against which the rates and fees of private education loans must be compared.[23] The rates and fees that have been allowed under the FFEL program, which the preamble of the proposal explained was a "comparable U.S. Department of Education program," are statutorily specified and are very similar to the rates and fees charged to borrowers under the William D. Ford Direct Loan Program, which are also statutorily prescribed. The fixed rates under the Federal direct loan program that the agencies will use as benchmarks are the rates for unsubsidized direct Stafford loans for students and direct PLUS loans for parents.[24]

Although variable-rate loans are no longer available under the Department of Education programs, the Department of Education publishes rates annually for those variable-rate education loans that remain outstanding. The rate is based on 91-day Treasury bills plus a statutory percentage margin.[25]

Origination fees are allowed for Federal direct loans. Financial institutions may use the fee percentages for Federal loans to students and parents, as appropriate, as benchmarks.

Although the Agencies are adopting a definition of "low-cost education loan" that is generally similar to the proposal, if the Agencies find that the rules as adopted have not acted as an incentive to financial institutions' providing low-cost education loans to low-income borrowers, the Agencies may reconsider these provisions.

"Low-Income Borrower"

The Proposal

Under the proposed regulation, the term "low-income" had the same meaning as that term is defined in the existing CRA rule: An individual income less than 50 percent of area median income. In the preamble to the proposed regulation, the Agencies clarified that, if an institution considers the income of more than one person in connection with an education loan, the gross annual incomes of all primary obligors on the loan, including co-borrowers and co-signers, would be combined to determine whether the borrowers are "low-income."[26] The Agencies further noted that various education programs offered by the U.S. Department of Education are targeted to individuals who have financial needs and the criteria for the programs vary. The Agencies requested comment on whether low-income should be defined differently than the term is already defined in the CRA regulation. The Agencies also sought comment on how they should treat the income of a student's family or other expected family contributions to ensure that the CRA consideration provided is consistent with HEOA's focus on low-income borrowers.

Final Rule and Comments

Several commenters, including community groups and several financial institutions or trade associations generally supported using the 50 percent benchmark as proposed. Several financial institutions and trade associations advocated that the final rule be expanded to cover both low-income and moderate-income borrowers as defined by the existing CRA rule. A state association of lenders commented that the Agencies should simply base the income assessment on loans originated through the U.S. Department of Education by defining low-cost education loans as need-based federal student loans. This commenter and several financial institutions further explained that institutions that make U.S. Department of Education loans do not have access to financial and income information on students and their families because the student borrowers are qualified by the school; thus, it would be hard to determine for CRA purposes whether the borrowers are low-income. Some of these commenters recommended that low-income borrowers be defined as any borrower eligible for a loan through a program of the U.S. Department of Education or, for a borrower through a private loan program, with qualifying income that is less than 50 percent of area median income. Another financial institution recommended that government loans that are needs-based, such as subsidized Stafford loans, automatically qualify as loans to low-income borrowers. One trade association suggested that, as an alternative to the proposed definition of low-income (less than 50 percent of the area median income), the Agencies could look only at the household income of the primary obligor on the loan and if the primary obligor is a dependent in a low-income household, the primary obligor would be considered a low-income borrower no matter what additional guarantors or co-signors are obligated on the loan. Similarly, the commenter noted, if the student is a financially emancipated adult, then his/her individual income would determine his/her income status. Alternatively, the commenter suggests that if all those obligated on the credit are taken into account, then the final rule needs to clarify how the Agencies will calculate whether the low-income standard is met.

Several commenters addressed how to treat the income of a student's family or other expected family contributions to ensure that the CRA consideration is consistent with HEOA's focus on low-income borrowers. As noted above, a trade association suggested the final regulation should look at the household income of the primary obligor. That commenter recommended that household income be considered in lieu of considering income of a co-signer, to avoid any situation where obtaining a co-signer, who might strengthen the loan application and improve the safety and soundness of the loan, might be discouraged for CRA-related loans.

A nonprofit organization commented that, in cases where a student is the borrower but is claimed as a dependent, the household income of the taxpayer claiming the student should be used to determine whether the loan qualifies for CRA consideration. A trade association also suggested that if a student has applied for financial aid and has been identified as eligible, that should qualify the student as "low-income" for purposes of the test. A financial institution commented that, in addition to consideration of income, the CRA evaluation of education lending should also consider how many individuals are enrolled in or will be enrolled in an

[23] *See* 20 U.S.C. 1087e.

[24] *See http://studentaid.ed.gov/PORTALSWebApp/students/english/studentloans.jsp; http://studentaid.ed.gov/PORTALSWebApp/students/english/parentloans.jsp.*

[25] 20 U.S.C. 1087e(b)(6). *See also* U.S. Department of Education, "FFEL and Direct Loan Interest Rates Effective July 1, 2009," available at *http://studentaid.ed.gov/PORTALSWebApp/students/english/FFEL_DL_InterestRates.jsp.*

[26] This is consistent with guidance issued by the Agencies in the Interagency Questions and Answers Regarding Community Reinvestment, 75 FR 11642, 11671 (Mar. 11, 2010) (Q&A § __.42(c)(1)(iv)–4).

institution of higher education and whether such individuals had unmet financial needs that could be addressed by a private education loan. Another financial institution commented that the differences between the U.S. Department of Education loan qualification standards, which are generally based on need, and the private education loan qualification standards, which are generally based on credit score and income, should preclude treating Federal program loans and private education loans the same for purposes of the "low-income" analysis.

The Agencies considered these commenters' concerns about the possibility that a student borrower may be considered to be "low-income" under the CRA standard, even though the student's family may be able to provide additional financial support. The Agencies considered, for example, adopting a test to determine whether a student borrower is an "independent" student and, if not, requiring the use of family income to determine whether the loan was to a "low-income" borrower.

The Agencies are adopting the definition of "low-income" as proposed—based on an individual income that is less than 50 percent of the area median income. As noted above, some financial institutions may not require family income information in connection with education loans (except when family members co-sign or guaranty the loan). Requiring collection of data on family income would likely have imposed new burdens and procedural requirements on both borrowers and financial institutions.

"Other Education Loan Issues"

Quantitative Consideration

As proposed by the Agencies, institutions would receive favorable qualitative consideration for originating "low-cost education loans to low-income borrowers" as a factor in the institutions' overall CRA rating, independent of the consideration for consumer loans under the current lending test. Such loans would be considered responsive to the credit needs of the institutions' communities.

Under the CRA regulations, an institution's consumer lending must be evaluated if consumer lending makes up a substantial majority of an institution's business. Institutions that do not meet this criterion may choose to have education loans evaluated as consumer loans under the lending test applicable to the institution. If an institution opts to have education loans evaluated, the loans would be evaluated quantitatively, based on the data the institution provides. The Agencies requested comment on whether the final regulation should also allow an institution to receive separate quantitative consideration for the number and amount of low-cost education loans to low-income borrowers as part of its CRA evaluation under the performance test applicable to that institution, without regard to other consumer loans.

Comments and Final Rule

One financial institution agreed that institutions should receive favorable qualitative consideration for originating low-cost loans to low-income borrowers and recommended that, consistent with the treatment of other consumer loans, education loans not be reviewed as part of the quantitative CRA evaluation unless such loans represent a substantial majority of the financial institution's business or at the institution's option if it has collected and maintained data. Other financial institutions and a trade association strongly supported providing institutions the option to receive favorable quantitative consideration as consumer loans under the lending test of the current CRA rules. These commenters further stated that if the low-cost education loans were to become a separate subcategory of consumer lending, financial institutions would have to generate the necessary data, to the extent they do not already exist and that it would be difficult to evaluate the data in the absence of data from other institutions. They further stated that if this were the approach taken, it may be a disincentive to participate. Finally, one financial institution commented that the legislation regarding the low-cost education loans clearly anticipates that the agencies would consider student lending on its own merits, apart from other consumer loan categories and suggested that consideration could be accomplished by revising the consumer loan reporting categories to include a separate category for student loans.

After consideration of the comments, the Agencies have adopted the provision as proposed to make clear that all types and sizes of institutions will be eligible to receive qualitative consideration for originating "low-cost education loans to low-income borrowers" as a factor in the institutions' overall CRA rating, without regard to the performance test under which an institution is evaluated. As noted above, institutions may obtain CRA consideration of education loans as consumer loans under existing standards applicable to consumer loans.

Application to All Institutions

The Agencies also asked whether institutions and other interested parties understood that the new provision on low-cost education loans to low-income borrowers is applicable to all institutions, without regard to institution size, as a result of the provisions' placement in 12 CFR 25.21, 228.21, 345.21 and 563e.21. No commenters responded directly to the question. However, several commenters suggested that the Agencies should treat low-cost education loans to low-income borrowers differently than initially proposed.

Several commenters representing small financial institutions suggested that the provision should not apply to small financial institutions because few small institutions make education loans. As discussed above, financial institutions that do not make education loans will not be required to start making such loans.

Another commenter believed that evaluation of education lending should not apply to wholesale or limited purpose institutions. The Agencies agree that wholesale institutions will not engage directly in education lending because, by definition, wholesale institutions do not engage in retail lending. Limited purpose institutions, on the other hand, could engage in education lending as their narrow product line.

One commenter suggested that low-cost education loans to low-income borrowers should be considered as community development loans. The primary reason for this suggestion was based on the more expansive consideration of loans that are considered under the community development test—not only in an institution's assessment area(s), as proposed, but also in the broader statewide or regional area that includes its assessment area(s). The Agencies decline to adopt this change as suggested. The Agencies note that the legislative history of the Act indicates that the Agencies are to consider "low-cost education loans provided by a financial institution to low-income borrowers in assessing and taking into account the record of a financial institution in meeting the credit needs *of its local community*." [27] The proposed rule restricted favorable consideration for low-cost education loans to low-income borrowers to the institution's

[27] H. Rep. No. 110–500 at 366 (2007) (emphasis added). The CRA also generally encourages financial institutions to help meet the credit needs of the local communities in which they are chartered. 12 U.S.C. 2901(b).

assessment area(s). After careful consideration of the comments received, the Agencies have decided to apply the same rule that applies to the consideration of loans made to low- and moderate-income borrowers.[28] Thus, the final rule provides that the Agencies will consider low-cost education loans originated by a financial institution to low-income borrowers "particularly in its assessment area(s)." Similar to the analysis for loans to low- and moderate-income individuals generally, the Agencies will consider first whether a financial institution has adequately addressed the low-cost education loan needs of low-income borrowers in its assessment area(s) and, if so, will also consider such loans outside of its assessment area(s).[29] The Agencies believe that the final rule may provide greater flexibility and additional incentives for financial institutions to provide low-cost education loan programs for low-income borrowers.

Finally, one commenter emphasized that the provision addressing consideration of low-cost education loans to low-income borrowers should not affect CRA strategic plans that are already in effect or future plans. The Agencies do not intend this provision to affect CRA strategic plans.

Other Comments on the Proposed Education Loan Provision

Several commenters suggested that unnecessarily detailed technical requirements should be kept to a minimum in the final rule. The Agencies agree and have attempted to do so.

One commenter suggested that financial institutions should be able to receive CRA consideration for loans to students who reside in their assessment area(s) and also for loans to students who attend schools in the institutions' assessment area(s). The Agencies decline to adopt this suggestion. As with other consumer lending, a financial institution would look to the "loan location" to determine whether the loan meets the geographical requirements for loan consideration. "A consumer loan is located in the geography where the borrower resides * * *."[30] Therefore, the lender should rely on the address on the education loan application or otherwise provided by the borrower or school to determine the loan location.

Activities Undertaken in Cooperation with Minority- and Women-Owned Financial Institutions and Low-Income Credit Unions

The Proposal

Section 804(b) of the Community Reinvestment Act (CRA) provides that the Agencies may consider as a factor capital investment, loan participation, and other ventures undertaken by the institution in cooperation with minority- and women-owned financial institutions and low-income credit unions in assessing the CRA record of nonminority- and nonwomen-owned financial institutions. These activities, however, must help meet the credit needs of the local communities in which such institutions and credit unions are chartered.[31] The Agencies proposed to incorporate this statutory language into their regulations and to clarify that such activities need not also benefit the assessment area or the broader statewide or regional area that includes the assessment area of the nonminority- and nonwomen-owned institution. The preamble of the proposed rule indicated that activities undertaken to assist minority- and women-owned financial institutions and low-income credit unions would be considered as part of the overall assessment of the nonminority- and nonwomen-owned institution's CRA performance.[32]

The preamble further explained that the proposed revision to the rule would reinforce to examiners, financial institutions, and the public that the Agencies may consider and take into account nonminority- and nonwomen-owned financial institutions' activities in connection with minority- and women-owned financial institutions and low-income credit unions.[33] The Agencies noted that their 2009 revisions to the "Interagency Questions and Answers Regarding Community Reinvestment" clarified this point[34] and indicated the proposal was intended to codify this clarification in the rule.

The Agencies proposed to add the new provision addressing favorable CRA consideration for activities in cooperation with minority- and women-owned financial institutions and low-income credit unions to 12 CFR 25.21, 228.21, 345.21, and 563e.21. These sections apply to all types and sizes of institutions, without regard to the performance test under which an institution is evaluated. Accordingly, the preamble indicated that the proposed provision would also be applicable to all financial institutions. The Agencies also proposed a conforming amendment to Appendix A of the regulations to include consideration of a financial institution's activities in cooperation with minority- and women-owned financial institutions as a factor when assigning a rating to the institution.

Comments and Final Rule

Several consumer and community groups commented on the geographic scope of the proposal. They urged the Agencies to narrow the geographic scope by providing favorable CRA consideration to investments outside the majority-owned institution's assessment area only if the majority-owned institution met the needs of its assessment area. One community organization urged the Agencies to narrow the geographic scope even further by providing favorable CRA consideration only to loan participations and other ventures undertaken in cooperation with minority- and women-owned financial institutions and low-income credit unions outside the majority-owned institution's assessment area only if the majority-owned institution met the needs of its assessment area.

As the Agencies explained in the preamble to their 2009 Interagency Questions and Answers Regarding Community Reinvestment, the Agencies do not currently interpret section 804(b) of the CRA to impose such limitations.[35] However, as indicated in the question and answer guidance, the impact of such activities on majority-owned institution's CRA rating is determined in conjunction with its overall performance in its assessment area(s).[36] The Agencies note that activities outside of the majority-owned institution's assessment area will not compensate for poor lending performance within its assessment area and intend to add this clarification to the Interagency Questions and Answers Regarding Community Reinvestment.

One financial institution trade association urged the Agencies to treat all capital investments, loan participations, and other ventures undertaken by a majority-owned institution in cooperation with minority- and women-owned financial

[28] *See* 12 CFR 25.22(b)(3), 228.22(b)(3), 345.22(b)(3), and 563e.22(b)(3).

[29] *See* Interagency Questions and Answers Regarding Community Reinvestment, 75 FR at 11656–57 (Q&A § __.22(b)(2) & (3)–4).

[30] 12 CFR 25.12(o)(1), 228.12(o)(1), 345.12(o)(1), and 563e.12(o)(1).

[31] 12 U.S.C. 2903(b).

[32] 74 CFR at 31213.

[33] *Id.*

[34] 74 FR 498, 507 (Jan. 6, 2009) (Q&A § __.12(g)–4).

[35] 74 FR at 500.

[36] 74 FR at 507 (Q&A § __.12(g)–4); 75 FR at 11645 (same).

institutions and low-income credit unions as community development activities. The statute does not specify how the Agencies must evaluate these activities, some of which may not qualify as community development activities under the existing rules. Therefore, the Agencies have not adopted this suggestion.

However, the Agencies note that nothing in today's final rule affects the ability of any institution to receive community development consideration for activities undertaken in cooperation with minority- and women-owned financial institutions, low-income credit unions, and other financial intermediaries in those limited circumstances where such activities meet all of the rule's requirements for community development consideration. These requirements include having a primary purpose of community development (as defined in 12 CFR 25.12(g), 228.12(g), 345.12(g), or 563e.12(g), as applicable) and meeting the applicable geographic restrictions for community development activities. The Agencies' Interagency Questions and Answers Regarding Community Reinvestment provide as an example of "qualified investments," investments, grants, deposits, or shares in or to financial intermediaries, including minority- and women-owned financial institutions, that primarily lend or facilitate lending in low- and moderate-income areas or to low- and moderate-income individuals in order to promote community development.[37] Similarly, the Interagency Questions and Answers provide as an example of "community development loans," loans to financial intermediaries, including minority- and women-owned financial institutions, which primarily lend or facilitate lending to promote community development.[38] The Agencies are not changing the availability of community development consideration for these activities. Today's final rule allows capital investments, loan participations, and other ventures undertaken by a majority-owned institution in cooperation with minority- and women-owned financial institutions and low-income credit unions to be considered as a factor when assigning a rating; it applies to a broader range of activities than may qualify for community development consideration.

Several consumer and community organizations urged the Agencies to conduct an analysis of the impact of the 2009 guidance on minority- and women-owned institutions (Q&A § __.12(g)–4) before codifying the question and answer into the CRA rule. They urged the Agencies to evaluate the types of investments, loans, and services that have been leveraged to see whether they have disproportionately benefited predominantly white middle- and upper-income communities. They also urged the Agencies to ascertain whether bank financing of low-income credit unions and minority- and women-owned financial institutions has also benefited minorities and communities of color. The Agencies note that they are generally incorporating into the CRA regulations the statutory provision adopted by Congress.

The Agencies are adopting 12 CFR __.21(f) and revising Appendix A as proposed.

Effective Date

This joint final rule becomes effective 30 days after the date of publication in the **Federal Register**.

Interagency Guidance

The Agencies intend to issue for comment interagency CRA guidance addressing primarily the new provision addressing low-cost education loans made to low-income borrowers in the near future. The guidance, in the form of new interagency questions and answers, will include relevant explanatory discussion in the supplementary information accompanying this final rule. As noted above, the Agencies will also revise existing guidance to reflect the regulatory provisions[39] on activities in cooperation with minority- and women-owned financial institutions and low-income credit unions and to indicate that such activities outside of the majority-owned institution's assessment area(s) will not compensate for poor lending performance within its assessment area(s).

Regulatory Analysis

Paperwork Reduction Act

In accordance with the Paperwork Reduction Act of 1995 (44 U.S.C. Ch. 3506; 5 CFR 1320 Appendix A.1) (PRA), each agency reviewed its final rule and determined that there are no new collections of information contained therein. However, the amendments may have a negligible affect on burden estimates for existing information collections, including recordkeeping requirements for consumer loans. The Agencies did not receive any comments on the PRA section of the proposed rule.

Regulatory Flexibility Act

The Regulatory Flexibility Act (RFA) requires an agency that is issuing a final rule to provide a final regulatory flexibility analysis or to certify that the rule will not have a significant economic impact on a substantial number of small entities.

Under regulations issued by the Small Business Administration, a small entity includes a bank holding company, commercial bank, or savings association with assets of $175 million or less (collectively, small banking organizations). Under this joint final rule, the Agencies would consider, as a factor, when assessing an institution's CRA record that the institution made low-cost education loans to low-income borrowers or engaged in activities in cooperation with minority- or women-owned financial institutions or low-income credit unions. The Agencies believe that this joint final rule will not have a significant economic impact on a substantial number of small entities because the final rule does not require a financial institution to engage in these activities. In addition, the Agencies did not receive any comments that the proposal would have a significant impact on small banking organizations. Accordingly, each of the Agencies certifies that this rule will not have a significant economic impact on a substantial number of small entities.

OCC and OTS Executive Order 12866 Determinations

Pursuant to Executive Order 12866, OMB's Office of Information and Regulatory Affairs (OIRA) has designated the final rule to be significant.

OCC and OTS Unfunded Mandates Reform Act of 1995 Determination

Section 202 of the Unfunded Mandates Reform Act of 1995 (Unfunded Mandates Act) (2 U.S.C. 1532) requires that covered agencies prepare a budgetary impact statement before promulgating a rule that includes any Federal mandate that may result in the expenditure by State, local, and tribal governments, in the aggregate, or by the private sector, of $100 million or more in any one year. If a budgetary impact statement is required, section 205 of the Unfunded Mandates Act also requires covered agencies to identify and consider a reasonable number of regulatory alternatives before promulgating a rule. The OCC and the OTS have determined that this joint final rule will not result in expenditures by State, local, and tribal governments, or by the private sector, of $100 million

[37] 75 FR at 11652 (Q&A § __.12(t)–4).

[38] 75 FR at 11648 (Q&A § __.12(h)–1).

[39] 12 CFR 25.21(f); 228.21(f); 345.21(f); and 563e.21(f).

or more in any one year. Accordingly, neither agency has prepared a budgetary impact statement or specifically addressed the regulatory alternatives considered.

The Treasury and General Government Appropriations Act, 1999—Assessment of Impact of Federal Regulation on Families

The FDIC has determined that this joint final rule will not affect family well-being within the meaning of section 654 of the Treasury and General Government Appropriations Act, enacted as part of the Omnibus Consolidated and Emergency Supplemental Appropriations Act of 1999, Public Law 105–277 (5 U.S.C. 601 note).

OCC and OTS Executive Order 13132 Determination

The OCC and the OTS have each determined that its portion of this joint final rule does not have any Federalism implications, as required by Executive Order 13132.

Administrative Procedure Act; Riegle Community Development and Regulatory Improvement Act of 1994

This joint final rule becomes effective 30 days after the date of publication in the **Federal Register**.

Section 302 of the Riegle Community Development and Regulatory Improvement Act of 1994 (CDRIA), Public Law 103–325, authorizes a banking agency to issue a rule that contains additional reporting, disclosure, or other requirements to be effective before the first day of the calendar quarter that begins on or after the date on which the regulations are published in final form if the agency finds good cause for an earlier effective date. 12 U.S.C. 4802(b)(1). Section 302 of CDRIA does not apply because this final rule imposes no additional requirements. Rather, it reduces burden by expanding the ways institutions may receive CRA consideration.

List of Subjects

12 CFR Part 25

Community development, Credit, Investments, National banks, Reporting and recordkeeping requirements.

12 CFR Part 228

Banks, banking, Community development, Credit, Investments, Reporting and recordkeeping requirements.

12 CFR Part 345

Banks, banking, Community development, Credit, Investments, Reporting and recordkeeping requirements.

12 CFR Part 563e

Community development, Credit, Investments, Reporting and recordkeeping requirements, Savings associations.

Department of the Treasury

Office of the Comptroller of the Currency

12 CFR Chapter I

Authority and Issuance

■ For the reasons discussed in the joint preamble, the Office of the Comptroller of the Currency amends part 25 of chapter I of title 12 of the Code of Federal Regulations as follows:

PART 25—COMMUNITY REINVESTMENT ACT AND INTERSTATE DEPOSIT PRODUCTION REGULATIONS

■ 1. The authority citation for part 25 is revised to read as follows:

Authority: 12 U.S.C. 21, 22, 26, 27, 30, 36, 93a, 161, 215, 215a, 481, 1814, 1816, 1828(c), 1835a, 2901 through 2908, and 3101 through 3111.

■ 2. In § 25.21, add new paragraphs (e) and (f) to read as follows:

§ 25.21 Performance tests, standards, and ratings, in general.

* * * * *

(e) *Low-cost education loans provided to low-income borrowers.* In assessing and taking into account the record of a bank under this part, the OCC considers, as a factor, low-cost education loans originated by the bank to borrowers, particularly in its assessment area(s), who have an individual income that is less than 50 percent of the area median income. For purposes of this paragraph, "low-cost education loans" means any education loan, as defined in section 140(a)(7) of the Truth in Lending Act (15 U.S.C. 1650(a)(7)) (including a loan under a state or local education loan program), originated by the bank for a student at an "institution of higher education," as that term is generally defined in sections 101 and 102 of the Higher Education Act of 1965 (20 U.S.C. 1001 and 1002) and the implementing regulations published by the U.S. Department of Education, with interest rates and fees no greater than those of comparable education loans offered directly by the U.S. Department of Education. Such rates and fees are specified in section 455 of the Higher Education Act of 1965 (20 U.S.C. 1087e).

(f) *Activities in cooperation with minority- or women-owned financial institutions and low-income credit unions.* In assessing and taking into account the record of a nonminority-owned and nonwomen-owned bank under this part, the OCC considers as a factor capital investment, loan participation, and other ventures undertaken by the bank in cooperation with minority- and women-owned financial institutions and low-income credit unions. Such activities must help meet the credit needs of local communities in which the minority- and women-owned financial institutions and low-income credit unions are chartered. To be considered, such activities need not also benefit the bank's assessment area(s) or the broader statewide or regional area that includes the bank's assessment area(s).

■ 3. In Appendix A to Part 25, paragraph (a)(1) is revised to read as follows:

Appendix A to Part 25—Ratings

(a) * * *

(1) In assigning a rating, the OCC evaluates a bank's performance under the applicable performance criteria in this part, in accordance with §§ 25.21 and 25.28. This includes consideration of low-cost education loans provided to low-income borrowers and activities in cooperation with minority- or women-owned financial institutions and low-income credit unions, as well as adjustments on the basis of evidence of discriminatory or other illegal credit practices.

* * * * *

Federal Reserve System

12 CFR Chapter II

Authority and Issuance

■ For the reasons set forth in the joint preamble, the Board of Governors of the Federal Reserve System amends part 228 of chapter II of title 12 of the Code of Federal Regulations as follows:

PART 228—COMMUNITY REINVESTMENT (REGULATION BB)

■ 1. The authority citation for part 228 is revised as proposed to read as follows:

Authority: 12 U.S.C. 321, 325, 1828(c), 1842, 1843, 1844, and 2901 through 2908.

■ 2. In § 228.21, add new paragraphs (e) and (f) to read as follows:

§ 228.21 Performance tests, standards, and ratings, in general.

* * * * *

(e) *Low-cost education loans provided to low-income borrowers.* In assessing and taking into account the record of a

bank under this part, the Board considers, as a factor, low-cost education loans originated by the bank to borrowers, particularly in its assessment area(s), who have an individual income that is less than 50 percent of the area median income. For purposes of this paragraph, "low-cost education loans" means any education loan, as defined in section 140(a)(7) of the Truth in Lending Act (15 U.S.C. 1650(a)(7)) (including a loan under a state or local education loan program), originated by the bank for a student at an "institution of higher education," as that term is generally defined in sections 101 and 102 of the Higher Education Act of 1965 (20 U.S.C. 1001 and 1002) and the implementing regulations published by the U.S. Department of Education, with interest rates and fees no greater than those of comparable education loans offered directly by the U.S. Department of Education. Such rates and fees are specified in section 455 of the Higher Education Act of 1965 (20 U.S.C. 1087e).

(f) *Activities in cooperation with minority- or women-owned financial institutions and low-income credit unions.* In assessing and taking into account the record of a nonminority-owned and nonwomen-owned bank under this part, the Board considers as a factor capital investment, loan participation, and other ventures undertaken by the bank in cooperation with minority- and women-owned financial institutions and low-income credit unions. Such activities must help meet the credit needs of local communities in which the minority- and women-owned financial institutions and low-income credit unions are chartered. To be considered, such activities need not also benefit the bank's assessment area(s) or the broader statewide or regional area that includes the bank's assessment area(s).

■ 3. In Appendix A to Part 228, paragraph (a)(1) is revised to read as follows:

Appendix A to Part 228—Ratings

(a) * * *

(1) In assigning a rating, the Board evaluates a bank's performance under the applicable performance criteria in this part, in accordance with §§ 228.21 and 228.28. This includes consideration of low-cost education loans provided to low-income borrowers and activities in cooperation with minority- or women-owned financial institutions and low-income credit unions, as well as adjustments on the basis of evidence of discriminatory or other illegal credit practices.

* * * * *

Federal Deposit Insurance Corporation

12 CFR Chapter III

Authority and Issuance

■ For the reasons set forth in the joint preamble, the Board of Directors of the Federal Deposit Insurance Corporation amends part 345 of chapter III of title 12 of the Code of Federal Regulations as follows:

PART 345—COMMUNITY REINVESTMENT

■ 1. The authority citation for part 345 is revised to read as follows:

Authority: 12 U.S.C. 1814–1817, 1819–1820, 1828, 1831u and 2901–2908, 3103–3104, and 3108(a).

■ 2. In § 345.21, add new paragraphs (e) and (f) to read as follows:

§ 345.21 Performance tests, standards, and ratings, in general.

* * * * *

(e) *Low-cost education loans provided to low-income borrowers.* In assessing and taking into account the record of a bank under this part, the FDIC considers, as a factor, low-cost education loans originated by the bank to borrowers, particularly in its assessment area(s), who have an individual income that is less than 50 percent of the area median income. For purposes of this paragraph, "low-cost education loans" means any education loan, as defined in section 140(a)(7) of the Truth in Lending Act (15 U.S.C. 1650(a)(7)) (including a loan under a state or local education loan program), originated by the bank for a student at an "institution of higher education," as that term is generally defined in sections 101 and 102 of the Higher Education Act of 1965 (20 U.S.C. 1001 and 1002) and the implementing regulations published by the U.S. Department of Education, with interest rates and fees no greater than those of comparable education loans offered directly by the U.S. Department of Education. Such rates and fees are specified in section 455 of the Higher Education Act of 1965 (20 U.S.C. 1087e).

(f) *Activities in cooperation with minority- or women-owned financial institutions and low-income credit unions.* In assessing and taking into account the record of a nonminority-owned and nonwomen-owned bank under this part, the FDIC considers as a factor capital investment, loan participation, and other ventures undertaken by the bank in cooperation with minority- and women-owned financial institutions and low-income credit unions. Such activities must help meet the credit needs of local communities in which the minority- and women-owned financial institutions and low-income credit unions are chartered. To be considered, such activities need not also benefit the bank's assessment area(s) or the broader statewide or regional area that includes the bank's assessment area(s).

■ 3. In Appendix A to Part 345, paragraph (a)(1) is revised to read as follows:

Appendix A to Part 345—Ratings

(a) * * *

(1) In assigning a rating, the FDIC evaluates a bank's performance under the applicable performance criteria in this part, in accordance with §§ 345.21 and 345.28. This includes consideration of low-cost education loans provided to low-income borrowers and activities in cooperation with minority- or women-owned financial institutions and low-income credit unions, as well as adjustments on the basis of evidence of discriminatory or other illegal credit practices.

* * * * *

Department of the Treasury

Office of Thrift Supervision

12 CFR Chapter V

■ For the reasons set forth in the joint preamble, the Office of Thrift Supervision amends part 563e of chapter V of title 12 of the Code of Federal Regulations as follows:

PART 563e—COMMUNITY REINVESTMENT

■ 1. The authority citation for part 563e is revised to read as follows:

Authority: 12 U.S.C. 1462a, 1463, 1464, 1467a, 1814, 1816, 1828(c), and 2901 through 2908.

■ 2. In § 563e.21, add new paragraphs (e) and (f) to read as follows:

§ 563e.21 Performance tests, standards, and ratings, in general.

* * * * *

(e) *Low-cost education loans provided to low-income borrowers.* In assessing and taking into account the record of a savings association under this part, the OTS considers, as a factor, low-cost education loans originated by the savings association to borrowers, particularly in its assessment area(s), who have an individual income that is less than 50 percent of the area median income. For purposes of this paragraph, "low-cost education loans" means any education loan, as defined in section 140(a)(7) of the Truth in Lending Act (15 U.S.C. 1650(a)(7)) (including a loan under a state or local education loan program), originated by the savings

association for a student at an "institution of higher education," as that term is generally defined in sections 101 and 102 of the Higher Education Act of 1965 (20 U.S.C. 1001 and 1002) and the implementing regulations published by the U.S. Department of Education, with interest rates and fees no greater than those of comparable education loans offered directly by the U.S. Department of Education. Such rates and fees are specified in section 455 of the Higher Education Act of 1965 (20 U.S.C. 1087e).

(f) *Activities in cooperation with minority- or women-owned financial institutions and low-income credit unions.* In assessing and taking into account the record of a nonminority-owned and nonwomen-owned savings association under this part, the OTS considers as a factor capital investment, loan participation, and other ventures undertaken by the savings association in cooperation with minority- and women-owned financial institutions and low-income credit unions. Such activities must help meet the credit needs of local communities in which the minority- and women-owned financial institutions and low-income credit unions are chartered. To be considered, such activities need not also benefit the savings association's assessment area(s) or the broader statewide or regional area that includes the savings association's assessment area(s).

■ 3. In Appendix A to Part 563e, paragraph (a)(1) is revised to read as follows:

Appendix A to Part 563e—Ratings

(a) * * *

(1) In assigning a rating, the OTS evaluates a savings association's performance under the applicable performance criteria in this part, in accordance with §§ 563e.21 and 563e.28. This includes consideration of low-cost education loans provided to low-income borrowers and activities in cooperation with minority- or women-owned financial institutions and low-income credit unions, as well as adjustments on the basis of evidence of discriminatory or other illegal credit practices.

* * * * *

Dated: June 29, 2010.

John C. Dugan,

Comptroller of the Currency.

By order of the Board of Governors of the Federal Reserve System, September 2, 2010.

Jennifer J. Johnson,

Secretary of the Board.

Dated at Washington, DC, this 27th day of September, 2010.

Federal Deposit Insurance Corporation.

Robert E. Feldman,

Executive Secretary.

Dated: September 24, 2010.

By the Office of Thrift Supervision.

John E. Bowman,

Acting Director.

[FR Doc. 2010–24737 Filed 10–1–10; 8:45 am]

BILLING CODE 4810–33–P; 6210–01–P; 6714–01–P; 6720–01–P

DEPARTMENT OF TRANSPORTATION

Federal Aviation Administration

14 CFR Part 39

[Docket No. FAA–2010–0342; Directorate Identifier 2002–NE–08–AD; Amendment 39–16458; AD 2010–20–23]

RIN 2120–AA64

Airworthiness Directives; Bombardier-Rotax GmbH Type 912 F, 912 S, and 914 F Series Reciprocating Engines

AGENCY: Federal Aviation Administration (FAA), Department of Transportation (DOT).

ACTION: Final rule.

SUMMARY: The FAA is superseding an existing airworthiness directive (AD) for certain serial numbers (S/Ns) of Bombardier-Rotax GmbH type 912 F and 914 F series reciprocating engines. That AD currently requires initial and repetitive visual inspections of the engine crankcase for cracks. This AD requires those same inspections, adds the 912 S series to the affected population, adds a test procedure to determine the engine suitability for a special flight permit, and changes applicability from engine S/N to crankcase S/N. This AD results from an increase in the affected crankcase population. We are issuing this AD to prevent oil loss caused by cracks in the engine crankcase, which could lead to in-flight failure of the engine and forced landing.

DATES: This AD becomes effective November 8, 2010.

ADDRESSES: You can get the service information identified in this AD from BRP-Rotax GmbH & Co. KG, Welser Strasse 32, A–4623 Gunskirchen, Austria.

The Docket Operations office is located at Docket Management Facility, U.S. Department of Transportation, 1200 New Jersey Avenue, SE., West Building Ground Floor, Room W12–140, Washington, DC 20590–0001.

FOR FURTHER INFORMATION CONTACT: Alan Strom, Aerospace Engineer, Engine Certification Office, FAA, Engine & Propeller Directorate, 12 New England Executive Park, Burlington, MA 01803; *e-mail: alan.strom@faa.gov;* telephone (781) 238–7143; fax (781) 238–7199.

SUPPLEMENTARY INFORMATION: The FAA proposed to amend 14 CFR part 39 by superseding AD 2002–16–26, Amendment 39–12865 (67 FR 53296, August 15, 2002), with a proposed AD. The proposed AD applies to Bombardier-Rotax GmbH type 912 F, 912 S, and 914 F series reciprocating engines with certain serial-numbered crankcases. We published the proposed AD in the **Federal Register** on April 7, 2010 (75 FR 17632). That action proposed to require initial visual inspection for cracks in the engine crankcase of engines with certain serial-numbered crankcases, within 50 hours time-in-service (TIS) after the effective date of that AD, and repetitive visual inspections at each 100-hour, annual, or progressive inspection, or within 110 hours TIS since last inspection, whichever occurs first. If any cracks are found, the engine must be removed from service.

Examining the AD Docket

You may examine the AD docket on the Internet at *http://www.regulations.gov;* or in person at the Docket Operations office between 9 a.m. and 5 p.m., Monday through Friday, except Federal holidays. The AD docket contains this AD, the regulatory evaluation, any comments received, and other information. The street address for the Docket Operations office (telephone (800) 647–5527) is provided in the **ADDRESSES** section. Comments will be available in the AD docket shortly after receipt.

Comments

We provided the public the opportunity to participate in the development of this AD. We have considered the comment received.

One commenter asks us to change paragraph (g)(4) from "If the engine crankcase is cracked, replace the engine before further flight" to "If the engine crankcase is cracked, replace, repair, or overhaul the engine before further flight". The commenter states that this would allow the option of replacing the crankcase as a repair or overhaul as well as an outright engine replacement.

We partially agree. An owner or operator might interpret paragraph (g)(4) to mean they can't repair the engine. We have changed paragraph (g)(4) to state "If the engine crankcase is cracked, remove the engine from service before further flight."

Conclusion

We have carefully reviewed the available data, including the comment received, and determined that air safety and the public interest require adopting the AD with the change described previously. We have determined that this change will neither increase the economic burden on any operator nor increase the scope of the AD.

Costs of Compliance

Based on the service information, we estimate that this AD will affect about 250 products of U.S. registry. We also estimate that it will take about 3 work-hours per inspection and 20 work hours to replace the crankcase to comply with this AD. The average labor rate is $85 per work-hour. Required parts will cost about $6,500 per crankcase. Based on these figures and an estimate of one crankcase replaced per year, we estimate the annual cost of the AD on U.S. operators to be $71,950. Our cost estimate is exclusive of possible warranty coverage.

Authority for This Rulemaking

Title 49 of the United States Code specifies the FAA's authority to issue rules on aviation safety. Subtitle I, section 106, describes the authority of the FAA Administrator. Subtitle VII, Aviation Programs, describes in more detail the scope of the Agency's authority.

We are issuing this rulemaking under the authority described in Subtitle VII, part A, subpart III, section 44701, "General requirements." Under that section, Congress charges the FAA with promoting safe flight of civil aircraft in air commerce by prescribing regulations for practices, methods, and procedures the Administrator finds necessary for safety in air commerce. This regulation is within the scope of that authority because it addresses an unsafe condition that is likely to exist or develop on products identified in this rulemaking action.

Regulatory Findings

We have determined that this AD will not have federalism implications under Executive Order 13132. This AD will not have a substantial direct effect on the States, on the relationship between the national government and the States, or on the distribution of power and responsibilities among the various levels of government.

For the reasons discussed above, I certify that this AD:

(1) Is not a "significant regulatory action" under Executive Order 12866;

(2) Is not a "significant rule" under DOT Regulatory Policies and Procedures (44 FR 11034, February 26, 1979); and

(3) Will not have a significant economic impact, positive or negative, on a substantial number of small entities under the criteria of the Regulatory Flexibility Act.

We prepared a summary of the costs to comply with this AD and placed it in the AD Docket. You may get a copy of this summary at the address listed under **ADDRESSES**.

List of Subjects in 14 CFR Part 39

Air transportation, Aircraft, Aviation safety, Safety.

Adoption of the Amendment

■ Accordingly, under the authority delegated to me by the Administrator, the Federal Aviation Administration amends 14 CFR part 39 as follows:

PART 39—AIRWORTHINESS DIRECTIVES

■ 1. The authority citation for part 39 continues to read as follows:

Authority: 49 U.S.C. 106(g), 40113, 44701.

§ 39.13 [Amended]

■ 2. The FAA amends § 39.13 by removing Amendment 39–12865 (67 FR 53296, August 15, 2002), and by adding a new airworthiness directive, Amendment 39–16458, to read as follows:

2010–20–23 Bombardier-Rotax GmbH (formerly Rotax, Motorenfabrik): Amendment 39–16458. Docket No. FAA–2010–0342; Directorate Identifier 2002–NE–08–AD.

Effective Date

(a) This airworthiness directive (AD) becomes effective November 8, 2010.

Affected ADs

(b) This AD supersedes AD 2002–16–26, Amendment 39–12865.

Applicability

(c) This AD is applicable to Bombardier-Rotax GmbH type 912 F series, 912 S series, and 914 F series reciprocating engines that have a crankcase serial-numbered 27811 or lower, installed. These engines are installed on, but not limited to, Aeromot-Industria Mecanico Metalurgica Itda AMT–300; Aquila Technische Entwiklugen GmbH AQUILA AT01; Diamond Aircraft Industries DA–20A1; Diamond Aircraft Industries GmbH Models HK36TC, HK36TTC, HK36TTC–ECO, and HK36TTS; Iniziative Industriali Italiane S.p.A. Sky Arrow 650 series; SCHEIBE–Flugzeugnau GmbH SF 25C; and Stemme S10–VT aircraft.

Unsafe Condition

(d) This AD results from an increase in the affected engine crankcase population. We are issuing this AD to prevent oil loss caused by cracks in the engine crankcase, which could lead to in-flight failure of the engine and forced landing.

Compliance

(e) You are responsible for having the actions required by this AD performed within the compliance times specified, unless the actions have already been done.

Determining the Crankcase Serial Number (S/N)

(f) Determine if your crankcase is affected by looking at the S/N in the area indicated by XXX, following "Made in Austria," as shown on Figure 2 of this AD. The marking is on both crankcase halves.

Initial Inspection

(g) Within 50 hours time-in-service (TIS) from the effective date of this AD, perform a visual inspection as follows:

(1) Inspect the engine crankcase (item 1, Figure 1 of this AD) for cracks especially in the area of cylinder 1 upper side (item 2), between cylinder 1 and 3 upper side (item 3), cylinder 4 lower-right side (item 4) and detailed inspection in the area identified in Figure 2 (item 5) of this AD. Information concerning this inspection can be found in Bombardier-Rotax Mandatory Service Bulletins No. SB–912–029, Revision 3, dated July 11, 2006 and No. SB–914–018, Revision 3, dated July 11, 2006.

BILLING CODE 4910–13–P

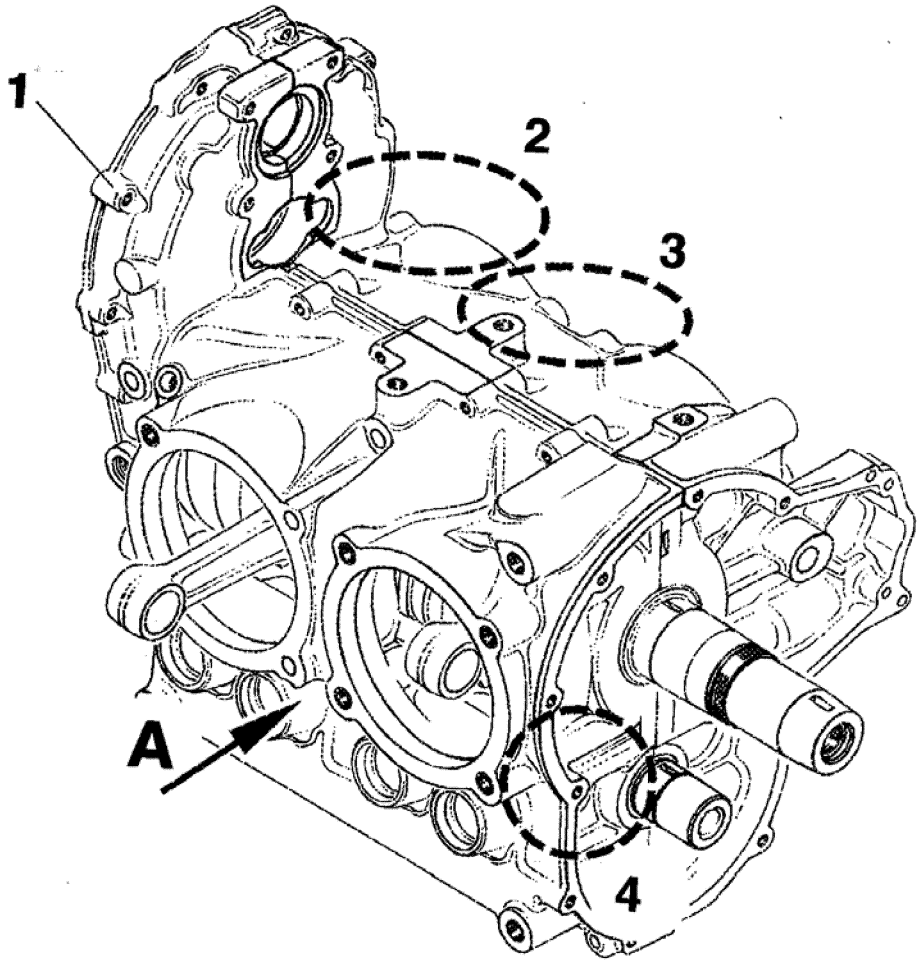

LEGEND

1. Engine Crankcase
2. Cylinder 1 Upper Side
3. Cylinder 3 Upper Side
4. Cylinder 4 Lower-right Side

Figure 1. Engine Crankcase Inspection Areas

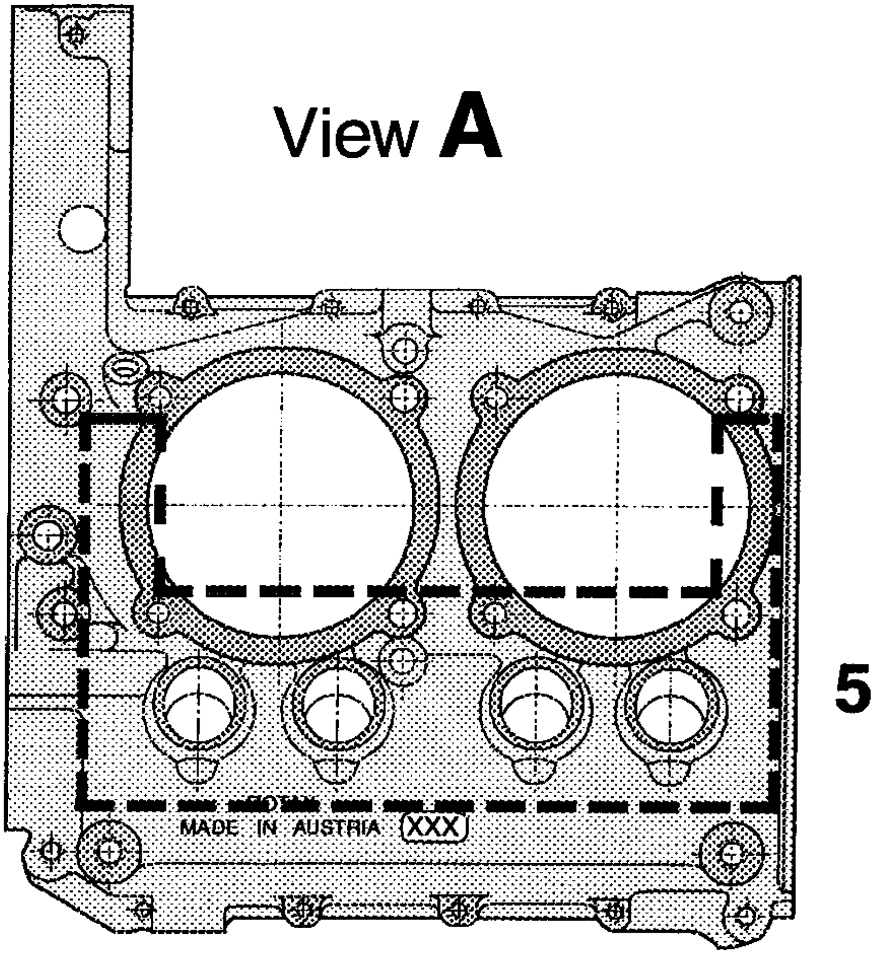

Figure 2. Engine Crankcase Inspection Areas – View A

BILLING CODE 4910–13–C

(2) Cracks in crankcases of engines with a ROTAX cooling air baffle may not be easily visible, and oil leaks may be an indication of cracks. Visually inspect for oil leaks in areas of cylinder 1 upper side (item 2, Figure 1 of this AD) and between cylinder 1 and cylinder 3 upper side (item 3).

(3) If you find oil leaks, determine the source by either using a borescope or removing the object blocking the view such as the air baffle or accessory, and perform the inspection.

(4) If the engine crankcase is cracked, remove the engine from service before further flight.

Repetitive Inspections

(h) Visually inspect the engine crankcase (item 1, Figure 1 of this AD) for cracks at each 100-hour, annual, or progressive inspection, or within 110 hours TIS since last inspection, whichever occurs first, in accordance with paragraphs (g)(1) through (g)(4) of this AD.

Alternative Methods of Compliance

(i) The Manager, Engine Certification Office, has the authority to approve alternative methods of compliance for this AD if requested using the procedures found in 14 CFR 39.19.

Special Flight Permits

(j) Under 14 CFR part 39.23, we are limiting the special flight permits for this AD by the following conditions if the crankcase is cracked or there is evidence of oil leakage from the crankcase:

(1) Perform a leak check as follows:

(i) Clean the crankcase surface to remove any oil.

(ii) Warm up the engine to a minimum oil temperature of 50 degrees C (120 degrees F). Information about warming up the engine can be found in the applicable line maintenance manual.

(iii) Accelerate the engine to full throttle and stabilize at full throttle speed for a time period of 5 to 10 seconds. Information about performing a full throttle run can be found in the applicable line maintenance manual.

(iv) Shutdown after running the engine at idle only long enough to prevent vapor locks in the cooling system and fuel system.

(v) Inspect the crankcase for evidence of oil leakage. Oil wetting is permitted, but oil leakage of more than one drip in 3 minutes after engine shutdown is not allowed.

(2) Check the crankcase mean pressure to confirm that it is 1.46 pounds-per-square inch gage (psig) (0.1 bar) or higher when checked at takeoff power to ensure proper return of oil from the crankcase to the oil tank. Information about checking crankcase mean pressure is available in the Lubrication System section of the applicable engine installation manual.

(3) A ferry flight is not allowed if oil leakage exceeds one drip in 3 minutes or if crankcase mean pressure is below 1.46 psig.

Optional Terminating Action

(k) Installing a crankcase that has a S/N above 27811 terminates the inspection requirements of paragraphs (g)(1) through (g)(4) and (h) of this AD.

Related Information

(l) Contact Alan Strom, Aerospace Engineer, Engine Certification Office, FAA, Engine & Propeller Directorate, 12 New England Executive Park, Burlington, MA 01803; *e-mail: alan.strom@faa.gov;* telephone (781) 238–7143; fax (781) 238–7199, for more information about this AD.

(m) EASA airworthiness directive 2007–0025, dated February 1, 2007, also addresses the subject of this AD.

(n) Bombardier-Rotax Mandatory Service Bulletins No. SB–912–029, Revision 3, dated July 11, 2006 and No. SB–914–018, Revision 3, dated July 11, 2006, pertain to the subject of this AD. Contact BRP-Rotax GmbH & Co. KG, Welser Strasse 32, A–4623 Gunskirchen, Austria, or go to rotax-aircraft-engines.com for a copy of this service information.

Material Incorporated by Reference

(o) None.

Issued in Burlington, Massachusetts, on September 24, 2010.

Francis A. Favara,

Manager, Engine and Propeller Directorate, Aircraft Certification Service.

[FR Doc. 2010–24629 Filed 10–1–10; 8:45 am]

BILLING CODE 4910–13–P

SECURITIES AND EXCHANGE COMMISSION

17 CFR Part 243

[Release Nos. 33–9146; 34–63003; IC–29448; File No. S7–23–10]

Removal From Regulation FD of the Exemption for Credit Rating Agencies

AGENCY: Securities and Exchange Commission.

ACTION: Final rule.

SUMMARY: This amendment implements Section 939B of the Dodd-Frank Wall Street Reform and Consumer Protection Act of 2010, which requires that the Securities and Exchange Commission amend Regulation FD to remove the specific exemption from the rule for disclosures made to nationally recognized statistical rating organizations and credit rating agencies for the purpose of determining or monitoring credit ratings.

DATES: *Effective Date:* October 4, 2010.

FOR FURTHER INFORMATION CONTACT: Steven G. Hearne, Special Counsel in the Office of Rulemaking, Division of Corporation Finance, at (202) 551–3430, 100 F Street, NE., Washington, DC 20549.

SUPPLEMENTARY INFORMATION: The Commission is deleting Rule 100(b)(2)(iii) [1] under Regulation FD.[2]

I. Overview of the Amendment

Regulation FD provides that when an issuer, or person acting on its behalf, discloses material nonpublic information to certain enumerated persons (in general, securities market professionals and holders of the issuer's securities who may trade on the basis of the information), it must make public disclosure of that information.[3] Section 939B of the Dodd-Frank Wall Street Reform and Consumer Protection Act of 2010 (the "Act") requires the Commission to "revise Regulation FD (17 CFR 243.100) to remove from such regulation the exemption for entities whose primary business is the issuance of credit ratings (17 CFR 243.100(b)(2)(iii))" within 90 days after the date of enactment.[4] The effective date of the legislation is July 21, 2010 and our revised rule will be effective for disclosure made on or after October 4, 2010.

II. Discussion of the Amendment

As required by the Act, we are amending Regulation FD to remove the specific exemption provided to nationally recognized statistical rating organizations and credit rating agencies for disclosure made to them for the purpose of determining or monitoring a credit rating. To effectuate this change, we are removing Rule 100(b)(2)(iii) of Regulation FD. Due to the removal of Rule 100(b)(2)(iii), we are re-designating Rule 100(b)(2)(iv) as Rule 100(b)(2)(iii).

Regulation FD is designed to address the problem of selective disclosure made to those who would reasonably be expected to trade securities on the basis of the information or provide others with advice about securities trading.[5] Under Regulation FD, the timing of the required public disclosure of material nonpublic information that is provided by an issuer, or persons acting on its behalf, to certain enumerated persons depends on whether the selective disclosure was intentional. For an intentional selective disclosure, the issuer must make public disclosure simultaneously. In other circumstances, the issuer must make public disclosure promptly. Under the regulation, the required public disclosure may be made by filing or furnishing a Form 8–K,[6] or by another method or combination of methods that is reasonably designed to provide broad, non-exclusionary distribution of the information to the public.[7]

Under Rule 100(b)(2)(iii) of Regulation FD, the issuer or person acting on the issuer's behalf need not make the public disclosure if the disclosure of material nonpublic information is made to a credit rating agency that makes its credit ratings publicly available, or is made pursuant to Rule 17g–5(a)(3) [8] to a nationally recognized statistical rating organization. As required by Section 939B of the Act, we are removing the exemption specifically available to these entities under Regulation FD.[9]

III. Procedural and Other Matters

The Administrative Procedure Act ("APA") generally requires an agency to publish notice of a proposed rulemaking in the **Federal Register**.[10] This requirement does not apply, however, if the agency "for good cause finds * * * that notice and public procedure thereon are impracticable, unnecessary, or contrary to the public interest." [11] The revision to Regulation FD that the Commission is adopting is required by Section 939B of the Act by the legislatively required date. Unless the rule and form amendments become effective by that date, issuers may be confused regarding their disclosure and reporting obligations. The Commission is required by statute to remove the specific exemption for disclosure provided to nationally recognized statistical rating organizations and credit rating agencies. Because this revision is required by Congress, it does not involve the exercise of Commission discretion or policy judgments. For these reasons, the Commission finds that good cause exists to dispense with a public notice and comment period for these amendments because notice and comment would be unnecessary, impracticable and contrary to the public interest.[12]

[1] 17 CFR 243.100(b)(2)(iii).

[2] 17 CFR 243.100 *et seq.*

[3] 17 CFR 243.100(a). *See* Selective Disclosure and Insider Trading, Release No. 34–43154 (Aug. 15, 2000) [65 FR 51716] at 51716 (the "Regulation FD Adopting Release").

[4] Pub. L. 111–203 (July 21, 2010).

[5] Regulation FD Adopting Release, *supra* note 3, at 51719.

[6] 17 CFR 249.308.

[7] 17 CFR 243.101(e).

[8] 17 CFR 240.17g–5(a)(3).

[9] Regulation FD also provides exemptions for communications made to a person who owes the issuer a duty of trust or confidence—i.e., a "temporary insider"—such as an attorney, investment banker, or accountant (17 CFR 243.100(b)(2)(i)), to any person who expressly agrees to maintain the information in confidence (17 CFR 243.100(b)(2)(ii)), and in connection with most offerings of securities registered under the Securities Act (17 CFR 243.100(b)(2)(iv)). These exemptions are unaffected by the Act.

[10] *See* 5 U.S.C. 553(b).

[11] 5 U.S.C. 553(b).

[12] The Regulatory Flexibility Act requires agencies to prepare analyses for rulemaking only when the APA requires general notice of proposed rulemaking. 5 U.S.C. 603(a). The Regulatory Flexibility Act does not apply to the rules we adopt today because, as noted above, the Commission is

The Commission is taking this action to implement the Act. Thus, any costs and benefits to the economy resulting from the amendments are mandated by the Act. Section 23(a)(2) [13] of the Securities Exchange Act of 1934 ("Exchange Act") [14] requires us, when adopting rules under the Exchange Act, to consider the anti-competitive effect of any rules we adopt. Further, Section 3(f) of the Exchange Act [15] and Section 2(c) of the Investment Company Act of 1940 [16] require us, when engaging in rulemaking where we are required to consider or determine whether an action is necessary or appropriate in the public interest, to consider, in addition to the protection of investors, whether the action will promote efficiency, competition and capital formation. While the amendments may affect efficiency, competition and capital formation, the action we are taking today is required by the Act and imposes no burden on efficiency, competition and capital formation that is not consistent with implementation of the Act.

IV. Paperwork Reduction Act

Certain provisions of Regulation FD contain "collection of information" requirements within the meaning of the Paperwork Reduction Act of 1995.[17] An agency may not conduct or sponsor, and a person is not required to respond to, a collection of information unless it displays a currently valid OMB control number. Compliance with the disclosure requirements is mandatory. There is no mandatory retention period for the information disclosed, and responses to the disclosure requirements will not be kept confidential.

The titles for the collections are (1) Form 8–K, and (2) Reg FD–Other Disclosure Materials. OMB approved the regulation's information collection requirements. Form 8–K (OMB Control No. 3235–0060) was adopted pursuant to Sections 13,[18] 15,[19] and 23 [20] of the Exchange Act, and Regulation FD–Other Disclosure Materials (OMB Control No. 3235–0536) was adopted pursuant to Sections 13, 15, 23, and 36 [21] of the Exchange Act.

As discussed in the Regulation FD proposing [22] and adopting releases,[23] in many cases, information disclosed under Regulation FD would be information that an issuer ultimately was going to disclose to the public. Under Regulation FD, that issuer likely will not make any more public disclosure than it otherwise would, but it may make the disclosure sooner and it is required to file or disseminate that information in a manner reasonably designed to provide broad, non-exclusionary distribution of the information to the public. Following the amendments adopted today, reporting persons will remain obligated to disclose the same information that they were previously required to report on these forms. We therefore believe that the overall information collection burden will remain approximately the same because the same transactions will remain reportable.

V. Statutory Authority and Text of the Amendment

The amendments described in this release are being adopted under the authority set forth in Sections 10, 19(a), and 28 of the Securities Act of 1933, Sections 3, 9, 10, 13, 15, 23, and 36 of the Securities Exchange Act of 1934, Section 30 of the Investment Company Act of 1940, and Section 939B of the Dodd-Frank Wall Street Reform and Consumer Protection Act of 2010.

List of Subjects in 17 CFR Part 243

Reporting and recordkeeping requirements, Securities.

Text of Amendments

■ For the reasons set out in the preamble, the Commission amends Title 17, Chapter II of the Code of Federal Regulations as follows:

PART 243—REGULATION FD

■ 1. The authority citation for part 243 continues to read as follows:

Authority: 15 U.S.C. 78c, 78i, 78j, 78m, 78o, 78w, 78mm, and 80a–29, unless otherwise noted.

§ 243.100 [Amended]

■ 2. Section 243.100 is amended by removing paragraph (b)(2)(iii) and redesignating paragraph (b)(2)(iv) as (b)(2)(iii).

By the Commission.

Dated: September 29, 2010.

Elizabeth M. Murphy,

Secretary.

[FR Doc. 2010–24802 Filed 10–1–10; 8:45 am]

BILLING CODE 8010–01–P

not required to solicit public comment when using the expedited rulemaking procedures under Section 553(b) of the APA.

[13] 15 U.S.C. 78w(a)(2).

[14] 15 U.S.C. 78a *et seq.*

[15] 15 U.S.C. 78c(f).

[16] 15 U.S.C. 80a–2(c).

[17] 44 U.S.C. 3501 *et seq.*

[18] 15 U.S.C. 78m.

[19] 15 U.S.C. 78o.

[20] 15 U.S.C. 78w.

[21] 15 U.S.C. 78mm.

[22] *See* Selective Disclosure and Insider Trading, Release No. 34–42259 (Dec. 20, 1999) [64 FR 72590].

[23] *See* Regulation FD Adopting Release, *supra* note 3.

DEPARTMENT OF THE INTERIOR

Bureau of Ocean Energy Management, Regulation, and Enforcement

30 CFR Parts 201, 202, 203, 204, 206, 207, 208, 210, 212, 217, 218, 219, 220, 227, 228, 229, 241, 243, and 290

Office of Natural Resources Revenue

30 CFR Parts 1201, 1202, 1203, 1204, 1206, 1207, 1208, 1210, 1212, 1217, 1218, 1219, 1220, 1227, 1228, 1229, 1241, 1243, and 1290

[Docket No. MMS–2010–MRM–0033]

RIN 1010–AD70

Reorganization of Title 30, Code of Federal Regulations

AGENCY: Bureau of Ocean Energy Management, Regulation, and Enforcement; Office of Natural Resources Revenue; Department of the Interior.

ACTION: Direct final rule.

SUMMARY: On May 19, 2010, the Secretary of the Interior separated the responsibilities previously performed by the former Minerals Management Service (MMS) and reassigned those responsibilities to three separate organizations. As part of this reorganization, the Secretary renamed MMS's Minerals Revenue Management Program (MRM) the Office of Natural Resources Revenue (ONRR) and directed that ONRR transition to the Office of the Assistant Secretary—Policy, Management and Budget (PMB). This change requires reorganization of title 30 of the Code of Federal Regulations (30 CFR). This direct final rule amends chapter II in 30 CFR, establishes a new chapter XII in 30 CFR, removes certain regulations from chapter II, and recodifies them in the new chapter XII.

DATES: This rule is effective on October 1, 2010, without further action, unless substantive adverse comment is received by November 3, 2010. If substantive adverse comment is received that cannot be addressed, Department of the Interior will publish a timely amendment of the rule in the **Federal Register**.

ADDRESSES: You may submit comments on this rule by any of the following methods:

- Electronically go to *http://www.regulations.gov.* In the entry titled "Enter Keyword or ID," enter MMS–2010–MRM–0033, and then click search. Follow the instructions to submit public comments. The ONRR will post all comments.
- Mail comments to Armand Southall, Regulatory Specialist, ONRR, PMB, P.O. Box 25165, MS 61013B, Denver, Colorado 80225. Please reference the Docket No. MMS–2010–MRM–0033 in your comments.
- Hand-carry comments or use an overnight courier service. Our courier address is Building 85, Room A–614, Denver Federal Center, West 6th Ave. and Kipling St., Denver, Colorado 80225. Please reference the Docket No. MMS–2010–MRM–0033 in your comments.

FOR FURTHER INFORMATION CONTACT: For questions on technical issues, contact Armand Southall, Regulatory Specialist, ONRR, PMB, telephone (303) 231–3221. You may obtain a paper copy of this rule by contacting Mr. Southall by phone or at the address listed above for mailing comments.

SUPPLEMENTARY INFORMATION:

Background

On May 19, 2010, by Secretarial Order No. 3299, the Secretary of the Department of the Interior announced the restructuring of the MMS. On June 18, 2010, by Secretarial Order No. 3302, the Secretary announced the name change of the MMS to the Bureau of Ocean Energy Management, Regulation, and Enforcement (BOEMRE). By these orders, the Secretary separated the responsibilities previously performed by MMS and reassigned those responsibilities to three separate organizations: the Office of Natural Resources Revenue (ONRR); the Bureau of Ocean Energy Management (BOEM); and the Bureau of Safety and Environmental Enforcement (BSEE). The new ONRR will be responsible for the existing MRM royalty and revenue functions and is scheduled to transition to the Assistant Secretary—Policy, Management and Budget organization on October 1, 2010, the beginning of Fiscal Year 2011.

Reorganization of Title 30 CFR

Title 30—Mineral Resources of the Code of Federal Regulations (30 CFR), is organized in three volumes. Volume II contains three chapters, and one of the chapters is titled "Chapter II—Minerals Management Service, Department of the Interior." Because Secretarial Order No. 3299 separated ONRR functions (formerly MRM) from MMS (now BOEMRE), this direct final rule separates ONRR's regulations from the MMS regulations as well. This direct final rule reorganizes 30 CFR—renames chapter II from Minerals Management Service to Bureau of Ocean Energy Management, Regulation, and Enforcement, and adds a Chapter XII—Office of Natural Resources Revenue to 30 CFR as a new home for those regulations. This direct final rule does not make any substantive changes to the regulations or requirements in 30 CFR. It merely moves ONRR's current regulations to a new chapter XII in 30 CFR and makes technical corrections to position titles, agency names, and acronyms. In the near future, BOEMRE and ONRR may individually make additional technical corrections to their regulations as required by the restructuring of the former MMS into the three separate organizations. This may include changes to agency addresses, website addresses, delegation order numbers, and cross references within the regulations. Parts 200, 215, 230, 232, 233, 234, and 242 were not moved to chapter XII because these parts are listed as **Reserved** in title 30 CFR, chapter II. As noted, this direct final rule amends and removes 19 existing parts and related existing subparts in 30 CFR concerning royalty reporting and payment, marginal properties, product valuation, forms and reports, audits and inspections, collection of monies, delegation to states and cooperative activities, bonding, civil penalties, and appeals from chapter II and recodifies them in the new chapter XII.

The parts and subparts to be moved are:

- Part 201—General, which becomes part 1201.
- Part 202—Royalties, which becomes part 1202.
- Part 203—Relief or Reduction in Royalty Rates, Subpart F—Coal, which becomes part 1203.
- Part 204—Alternatives for Marginal Properties, which becomes part 1204.
- Part 206—Production Valuation, which becomes part 1206.
- Part 207—Sales Agreements or Contracts Governing the Disposal of Lease Products, which becomes part 1207.
- Part 208—Sale of Federal Royalty Oil, which becomes part 1208.
- Part 210—Forms and Reports, which becomes part 1210.
- Part 212—Records and Files Maintenance, which becomes part 1212.
- Part 217—Audits and Inspections, which becomes part 1217.
- Part 218—Collection of Monies and Provision for Geothermal Credits and Incentives, which becomes part 1218.
- Part 219—Distribution and Disbursement of Royalties, Rentals, and Bonuses, Subpart C—Oil and Gas, Onshore, which becomes part 1219.
- Part 220—Accounting Procedures for Determining Net Profit Share Payment for Outer Continental Shelf Oil and Gas Leases, which becomes part 1220.
- Part 227—Delegation to States, which becomes part 1227.
- Part 228—Cooperative Activities with States and Indian Tribes, which becomes part 1228.
- Part 229—Delegation to States, which becomes part 1229.
- Part 241—Penalties, which becomes part 1241.
- Part 243—Suspensions Pending Appeal and Bonding—Minerals Revenue Management, which becomes part 1243.
- Part 290—Appeals Procedures, Subpart B—Minerals Management Revenue Appeal Procedures, which becomes part 1290.

The following are derivation tables for each of these recodified parts:

DERIVATION TABLE FOR PART 1201

The requirements of section:	Are derived from section:
Subpart A [Reserved]	
Subpart B [Reserved]	
Subpart C	
1201.100	201.100

DERIVATION TABLE FOR PART 1201—Continued

The requirements of section:	Are derived from section:
Subpart D [Reserved]	
Subpart E [Reserved]	
Subpart F [Reserved]	
Subpart G [Reserved]	
Subpart H [Reserved]	

DERIVATION TABLE FOR PART 1202

The requirements of section:	Are derived from section:
Subpart A [Reserved]	
Subpart B	
1202.51	202.51
1202.52	202.52
1202.53	202.53
Subpart C	
1202.100	202.100
1202.101	202.101
Subpart D	
1202.150	202.150
1202.151	202.151
1202.152	202.152
Subpart E [Reserved]	
Subpart F	
1202.250	202.250
Subpart G [Reserved]	
Subpart H	
1202.350	202.350
1202.351	202.351
1202.352	202.352
1202.353	202.353
Subpart I [Reserved]	
Subpart J	
1202.550	202.550
1202.551	202.551
1202.552	202.552
1202.553	202.553
1202.554	202.554
1202.555	202.555
1202.556	202.556
1202.557	202.557
1202.558	202.558

Derivation Table for Part 1203

Subpart A [Offshore Energy and Minerals Management]	
Subpart B [Offshore Energy and Minerals Management]	
Subpart C [Reserved]	
Subpart D [Reserved]	
Subpart E [Reserved]	
Subpart F	
1203.250	203.250
1203.251	203.251
Subpart G [Reserved]	
Subpart H [Reserved]	
Subpart I [Offshore Energy and Minerals Management]	

Derivation Table for Part 1204

The requirements of section:	Are derived from section:
Subpart A	
1204.1	204.1
1204.2	204.2
1204.3	204.3
1204.4	204.4
1204.5	204.5
1204.6	204.6
Subpart B [Reserved]	
Subpart C	
1204.200	204.200
1204.201	204.201
1204.202	204.202
1204.203	204.203
1204.204	204.204
1204.205	204.205
1204.206	204.206
1204.207	204.207
1204.208	204.208
1204.209	204.209
1204.210	204.210
1204.211	204.211
1204.212	204.212
1204.213	204.213
1204.214	204.214
1204.215	204.215

Derivation Table for Part 1206

The requirements of section:	Are derived from section:
Subpart A	
1206.10	206.10
Subpart B	
1206.50	206.50
1206.51	206.51
1206.52	206.52
1206.53	206.53
1206.54	206.54
1206.55	206.55
1206.56	206.56
1206.57	206.57

DERIVATION TABLE FOR PART 1206—Continued

The requirements of section:	Are derived from section:
1206.58	206.58
1206.59	206.59
1206.60	206.60
1206.61	206.61
1206.62	206.62
Subpart C	
1206.100	206.100
1206.101	206.101
1206.102	206.102
1206.103	206.103
1206.104	206.104
1206.105	206.105
1206.106	206.106
1206.107	206.107
1206.108	206.108
1206.109	206.109
1206.110	206.110
1206.111	206.111
1206.112	206.112
1206.113	206.113
1206.114	206.114
1206.115	206.115
1206.116	206.116
1206.117	206.117
1206.119	206.119
1206.120	206.120
Subpart D	
1206.150	206.150
1206.151	206.151
1206.152	206.152
1206.153	206.153
1206.154	206.154
1206.155	206.155
1206.156	206.156
1206.157	206.157
1206.158	206.158
1206.159	206.159
1206.160	206.160
Subpart E	
1206.170	206.170
1206.171	206.171
1206.172	206.172
1206.173	206.173
1206.174	206.174
1206.175	206.175
1206.176	206.176
1206.177	206.177
1206.178	206.178
1206.179	206.179
1206.180	206.180
1206.181	206.181
Subpart F	
1206.250	206.250
1206.251	206.251
1206.252	206.252
1206.253	206.253
1206.254	206.254
1206.255	206.255
1206.256	206.256
1206.257	206.257
1206.258	206.258
1206.259	206.259
1206.260	206.260
1206.261	206.261

DERIVATION TABLE FOR PART 1206—Continued

The requirements of section:	Are derived from section:
1206.262	206.262
1206.263	206.263
1206.264	206.264
1206.265	206.265
Subpart G	
1206.301	206.301
Subpart H	
1206.350	206.350
1206.351	206.351
1206.352	206.352
1206.353	206.353
1206.354	206.354
1206.355	206.355
1206.356	206.356
1206.357	206.357
1206.358	206.358
1206.359	206.359
1206.360	206.360
1206.361	206.361
1206.362	206.362
1206.363	206.363
1206.364	206.364
1206.365	206.365
1206.366	206.366
Subpart I [Reserved]	
Subpart J	
1206.450	206.450
1206.451	206.451
1206.452	206.452
1206.453	206.453
1206.454	206.454
1206.455	206.455
1206.456	206.456
1206.457	206.457
1206.458	206.458
1206.459	206.459
1206.460	206.460
1206.461	206.461
1206.462	206.462
1206.463	206.463
1206.464	206.464

DERIVATION TABLE FOR PART 1207

The requirements of section:	Are derived from section:
Subpart A	
1207.1	207.1
1207.2	207.2
1207.3	207.3
1207.4	207.4
1207.5	207.5

DERIVATION TABLE FOR PART 1207—Continued

The requirements of section:	Are derived from section:
Subpart B [Reserved]	
Subpart C [Reserved]	
Subpart D [Reserved]	
Subpart E [Reserved]	
Subpart F [Reserved]	
Subpart G [Reserved]	
Subpart H [Reserved]	
Subpart I [Reserved]	

DERIVATION TABLE FOR PART 1208

The requirements of section:	Are derived from section:
Subpart A	
1208.1	208.1
1208.2	208.2
1208.3	208.3
1208.4	208.4
1208.5	208.5
1208.6	208.6
1208.7	208.7
1208.8	208.8
1208.9	208.9
1208.10	208.10
1208.11	208.11
1208.12	208.12
1208.13	208.13
1208.14	208.14
1208.15	208.15
1208.16	208.16
1208.17	208.17

DERIVATION TABLE FOR PART 1210

The requirements of section:	Are derived from section:
Subpart A	
1210.01	210.01
1210.02	210.02
1210.10	210.10
1210.20	210.20
1210.21	210.21
1210.30	210.30
1210.40	210.40
Subpart B	
1210.50	210.50
1210.51	210.51
1210.52	210.52
1210.53	210.53
1210.54	210.54
1210.55	210.55
1210.56	210.56
1210.60	210.60
Subpart C	
1210.100	210.100
1210.101	210.101
1210.102	210.102
1210.103	210.103

DERIVATION TABLE FOR PART 1210—Continued

The requirements of section:	Are derived from section:
1210.104	210.104
1210.105	210.105
1210.106	210.106
Subpart D	
1210.150	210.150
1210.151	210.151
1210.152	210.152
1210.153	210.153
1210.154	210.154
1210.155	210.155
1210.156	210.156
1210.157	210.157
1210.158	210.158
Subpart E	
1210.200	210.200
1210.201	210.201
1210.202	210.202
1210.203	210.203
1210.204	210.204
1210.205	210.205
1210.206	210.206
1210.207	210.207
Subpart F [Reserved]	
Subpart G [Reserved]	
Subpart H	
1210.350	210.350
1210.351	210.351
1210.352	210.352
1210.353	210.353
1210.354	210.354
Subpart I [Reserved]	

DERIVATION TABLE FOR PART 1212

The requirements of section:	Are derived from section:
Subpart A [Reserved]	
Subpart B	
1212.50	212.50
1212.51	212.51
1212.52	212.52
Subpart C [Reserved]	
Subpart D [Reserved]	
Subpart E	
1212.200	212.200
Subpart F [Reserved]	
Subpart G [Reserved]	
Subpart H	
1212.350	212.350
1212.351	212.351
Subpart I [Reserved]	

DERIVATION TABLE FOR PART 1217

The requirements of section:	Are derived from section:
Subpart A [Reserved]	
Subpart B	
1217.50	217.50
1217.51	217.51
1217.52	217.52
Subpart C [Reserved]	
Subpart D [Reserved]	
Subpart E	
1217.200	217.200
Subpart F	
1217.250	217.250
Subpart G	
1217.300	217.300
1217.301	217.301
1217.302	217.302
Subpart H [Reserved]	

DERIVATION TABLE FOR PART 1218

The requirements of section:	Are derived from section:
Subpart A	
1218.10	218.10
1218.40	218.40
1218.41	218.41
1218.42	218.42
Subpart B	
1218.50	218.50
1218.51	218.51
1218.52	218.52
1218.53	218.53
1218.54	218.54
1218.55	218.55
1218.56	218.56
Subpart C	
1218.100	218.100
1218.101	218.101
1218.102	218.102
1218.103	218.103
1218.104	218.104
1218.105	218.105
Subpart D	
1218.150	218.150
1218.151	218.151
1218.152	218.152
1218.153	218.153
1218.154	218.154
1218.155	218.155
1218.156	218.156
Subpart E	
1218.200	218.200
1218.201	218.201

DERIVATION TABLE FOR PART 1218—Continued

The requirements of section:	Are derived from section:
1218.202	218.202
1218.203	218.203
Subpart F	
1218.300	218.300
1218.301	218.301
1218.302	218.302
1218.303	218.303
1218.304	218.304
1218.305	218.305
1218.306	218.306
1218.307	218.307
Subpart G [Reserved]	
Subpart H	
1218.500	218.500
1218.520	218.520
1218.540	218.540
1218.560	218.560
1218.580	218.580

DERIVATION TABLE FOR PART 1219

The requirements of section:	Are derived from section:
Subpart A [Reserved]	
Subpart B [Reserved]	
Subpart C	
1219.100	219.100
1219.101	219.101
1219.102	219.102
1219.103	219.103
1219.104	219.104
1219.105	219.105
Subpart D	
1219.410	219.410
1219.411	219.411
1219.412	219.412
1219.413	219.413
1219.414	219.414
1219.415	219.415
1219.416	219.416
1219.417	219.417
1219.418	219.418

DERIVATION TABLE FOR PART 1220

The requirements of section:	Are derived from section:
1220.001	220.001
1220.002	220.002
1220.003	220.003
1220.010	220.010
1220.011	220.011
1220.012	220.012
1220.013	220.013
1220.014	220.014
1220.015	220.015
1220.020	220.020
1220.021	220.021
1220.022	220.022
1220.030	220.030
1220.031	220.031

DERIVATION TABLE FOR PART 1220—Continued

The requirements of section:	Are derived from section:
1220.032	220.032
1220.033	220.033
1220.034	220.034

DERIVATION TABLE FOR PART 1227

The requirements of section:	Are derived from section:
1227.1	227.1
1227.10	227.10
1227.101	227.101
1227.102	227.102
1227.103	227.103
1227.104	227.104
1227.105	227.105
1227.106	227.106
1227.107	227.107
1227.108	227.108
1227.109	227.109
1227.110	227.110
1227.111	227.111
1227.112	227.112
1227.200	227.200
1227.201	227.201
1227.300	227.300
1227.301	227.301
1227.400	227.400
1227.401	227.401
1227.500	227.500
1227.501	227.501
1227.600	227.600
1227.601	227.601
1227.700	227.700
1227.800	227.800
1227.801	227.801
1227.802	227.802
1227.803	227.803
1227.804	227.804
1227.805	227.805

DERIVATION TABLE FOR PART 1228

The requirements of section:	Are derived from section:
Subpart A	
1228.1	228.1
1228.2	228.2
1228.3	228.3
1228.4	228.4
1228.5	228.5
1228.6	228.6
1228.10	228.10
Subpart B [Reserved]	
Subpart C	
1228.100	228.100
1228.101	228.101
1228.102	228.102
1228.103	228.103
1228.104	228.104
1228.105	228.105
1228.107	228.107
1228.108	228.108

DERIVATION TABLE FOR PART 1229

The requirements of section:	Are derived from section:
Subpart A	
1229.1	229.1
1229.2	229.2
1229.3	229.3
1229.4	229.4
1229.6	229.6
1229.10	229.10
Subpart B [Reserved]	
Subpart C	
1229.100	229.100
1229.101	229.101
1229.102	229.102
1229.103	229.103
1229.104	229.104
1229.105	229.105
1229.106	229.106
1229.107	229.107
1229.108	229.108
1229.109	229.109
1229.110	229.110
1229.111	229.111
1229.120	229.120
1229.121	229.121
1229.122	229.122
1229.123	229.123
1229.124	229.124
1229.125	229.125
1229.126	229.126
1229.127	229.127

DERIVATION TABLE FOR PART 1241

The requirements of section:	Are derived from section:
Subpart A [Reserved]	
Subpart B	
1241.50	241.50
1241.51	241.51
1241.52	241.52
1241.53	241.53
1241.54	241.54
1241.55	241.55
1241.56	241.56
1241.60	241.60
1241.61	241.61
1241.62	241.62
1241.63	241.63
1241.64	241.64
1241.70	241.70
1241.71	241.71
1241.72	241.72
1241.73	241.73
1241.74	241.74
1241.75	241.75
1241.76	241.76
1241.77	241.77
1241.80	241.80

DERIVATION TABLE FOR PART 1241—Continued

The requirements of section:	Are derived from section:
Subpart C [Reserved]	
Subpart D [Reserved]	
Subpart E [Reserved]	
Subpart F [Reserved]	
Subpart G [Reserved]	
Subpart H [Reserved]	
Subpart I [Reserved]	

DERIVATION TABLE FOR PART 1243

The requirements of section:	Are derived from section:
Subpart A	
1243.1	243.1
1243.2	243.2
1243.3	243.3
1243.4	243.4
1243.5	243.5
1243.6	243.6
1243.7	243.7
1243.8	243.8
1243.9	243.9
1243.10	243.10
1243.11	243.11
1243.12	243.12
Subpart B	
1243.100	243.100
1243.101	243.101
Subpart C	
1243.200	243.200
1243.201	243.201
1243.202	243.202

DERIVATION TABLE FOR PART 1290

The requirements of section:	Are derived from section:
Subpart A [Offshore Energy and Minerals Management]	
Subpart B	
1290.100	290.100
1290.101	290.101
1290.102	290.102
1290.103	290.103
1290.104	290.104
1290.105	290.105
1290.106	290.106
1290.107	290.107
1290.108	290.108
1290.109	290.109
1290.110	290.110

Procedural Matters

1. Regulatory Planning and Review (E.O. 12866).

This document is not a significant rule, and the Office of Management and Budget (OMB) will not review this rule under Executive Order 12866.

a. This direct final rule does not have an effect of $100 million or more on the economy. It does not adversely affect in a material way the economy, productivity, competition, jobs, the environment, public health or safety, or state, local, or tribal governments or communities.

b. This direct final rule does not create a serious inconsistency or otherwise interfere with an action taken or planned by another agency.

c. This direct final rule does not alter the budgetary effects of entitlements, grants, user fees, or loan programs or the rights or obligations of their recipients.

d. This direct final rule does not raise novel legal or policy issues.

2. Regulatory Flexibility Act

The Department of the Interior certifies that this direct final rule not have a significant economic effect on a substantial number of small entities under the Regulatory Flexibility Act (5 U.S.C. 601 *et seq.*). This direct final rule will impact large and small entities but will not have a significant economic effect on either because this is a technical rule to reorganize certain title 30 CFR regulations.

3. Small Business Regulatory Enforcement Fairness Act (SBREFA)

This direct final rule is not a major rule under 5 U.S.C. 804(2), the Small Business Regulatory Enforcement Fairness Act. This direct final rule:

a. Will not have an annual effect on the economy of $100 million or more.

b. Will not cause a major increase in costs or prices for consumers, individual industries, Federal, state, or local government agencies, or geographic regions.

c. Will not have significant adverse effects on competition, employment, investment, productivity, innovation, or the ability of U.S.-based enterprises to compete with foreign-based enterprises.

4. Unfunded Mandates Reform Act

This direct final rule does not impose an unfunded mandate on state, local, or tribal governments, or the private sector of more than $100 million per year. This direct final rule does not have a significant or unique effect on state, local, or tribal governments, or the private sector. A statement containing the information required by the Unfunded Mandates Reform Act (2 U.S.C. 1531 *et seq.*) is not required.

5. Takings (E.O. 12630)

Under the criteria in Executive Order 12630, this direct final rule does not have any significant takings implications. This direct final rule applies to Outer Continental Shelf (OCS) and Federal and Indian onshore leases. It does not apply to private property. A takings implication assessment is not required.

6. Federalism (E.O. 13132)

Under the criteria in Executive Order 13132, this direct final rule does not have sufficient federalism implications that warrant the preparation of a Federalism Assessment. This is a technical rule to reorganize the title 30 CFR regulations. A Federalism Assessment is not required.

7. Civil Justice Reform (E.O. 12988)

This direct final rule complies with the requirements of Executive Order 12988. Specifically, this rule:

a. Meets the criteria of section 3(a) requiring that all regulations be reviewed to eliminate errors and ambiguity and be written to minimize litigation; and

b. Meets the criteria of section 3(b)(2) requiring that all regulations be written in clear language and contain clear legal standards.

8. Consultation With Indian Tribes (E.O. 13175)

Under the criteria in Executive Order 13175, we have evaluated this direct final rule and determined that it has no effects on federally recognized Indian tribes.

9. Paperwork Reduction Act

This direct final rule does not contain information collection requirements, and a submission to OMB is not required under the Paperwork Reduction Act of 1995 (44 U.S.C. 3501 *et seq.*).

10. National Environmental Policy Act

This direct final rule does not constitute a major Federal action significantly affecting the quality of the human environment. A detailed statement under the National Environmental Policy Act of 1969 is not required.

11. Data Quality Act

In developing this direct final rule, we did not conduct or use a study, experiment, or survey requiring peer review under the Data Quality Act (Pub. L. 106–554).

12. Effects on the Energy Supply (E.O. 13211)

This direct final rule is not a significant energy action under the definition in Executive Order 13211. A Statement of Energy Effects will not be required.

13. Clarity of This Regulation

We are required by Executive Orders 12866 and 12988 and by the Presidential Memorandum of June 1, 1998, to write all rules in plain language. This means that each rule we publish must: (a) Be logically organized; (b) Use the active voice to address readers directly; (c) Use clear language rather than jargon; (d) Be divided into short sections and sentences; and (e) Use lists and tables wherever possible.

If you feel that we have not met these requirements, send us comments by one of the methods listed in the **ADDRESSES** section. To better help us revise the rule, your comments should be as specific as possible. For example, you should tell us the numbers of the sections or paragraphs that are unclearly written, which sections or sentences are too long, the sections where you feel lists or tables would be useful, etc.

14. Public Availability of Comments

Before including your address, phone number, e-mail address, or other personal identifying information in your comment, you should be aware that your entire comment—including your personal identifying information—may be made publicly available at any time. While you can ask us in your comment to withhold your personal identifying information from public view, we cannot guarantee that we will be able to do so.

List of Subjects

30 CFR Part 201

Government contracts, Mineral royalties, Oil and gas exploration, Public Lands—mineral resources.

30 CFR Part 202

Coal, Continental shelf, Geothermal energy, Government contracts, Indians—lands, Mineral royalties, Oil and gas exploration, Public lands—mineral resources, Reporting and recordkeeping requirements, Sulfur.

30 CFR Part 203

Continental shelf, Government contracts, Indians—lands, Mineral royalties, Oil and gas exploration, Public lands—mineral resources, Sulfur.

30 CFR Part 204

Accounting and auditing relief, Barrels of oil equivalent (BOE),

Continental shelf, Federal lease, Marginal property, Mineral royalties, Royalty prepayment, Royalty relief.

30 CFR Part 206

Coal, Continental shelf, Geothermal energy, Government contracts, Indians—lands, Mineral royalties, Oil and gas exploration, Public lands—mineral resources, Reporting and recordkeeping requirements.

30 CFR Part 207

Continental shelf, Government contracts, Indians—lands, Mineral royalties, Public lands—mineral resources, Reporting and recordkeeping requirements.

30 CFR Part 208

Continental shelf, Government contracts, Mineral royalties, Petroleum, Public lands—mineral resources, Reporting and recordkeeping requirements, Small businesses, Surety bonds.

30 CFR Part 210

Continental shelf, Geothermal energy, Government contracts, Indians—lands, Mineral royalties, Oil and gas exploration, Public lands—mineral resources, Reporting and recordkeeping requirements, Sulfur.

30 CFR Part 212

Continental shelf, Geothermal energy, Government contracts, Indians—lands, Mineral royalties, Oil and gas exploration, Public lands—mineral resources, Reporting and recordkeeping requirements.

30 CFR Part 217

Coal, Government contracts, Mineral royalties, Oil and gas exploration, Public lands—mineral resources, Reporting and recordkeeping requirements.

30 CFR Part 218

Continental shelf, Electronic funds transfer, Geothermal energy, Indians—lands, Mineral royalties, Oil and gas exploration, Public lands—mineral resources, Reporting and recordkeeping requirements.

30 CFR Part 219

Government contracts, Indians—lands, Mineral royalties, Oil and gas exploration, Public lands—mineral resources.

30 CFR Part 220

Accounting, Continental shelf, Government contracts, Mineral royalties, Oil and gas exploration, Public lands—mineral resources, Reporting and recordkeeping requirements.

30 CFR Part 227

Administrative practice and procedure, Mineral royalties, Reporting and recordkeeping requirements.

30 CFR Part 228

Accounting, Administrative practice and procedure, Indians—lands, Intergovernmental relations, Mineral royalties, Oil and gas exploration, Public lands—mineral resources, Reporting and recordkeeping requirements.

30 CFR Part 229

Accounting, Administrative practice and procedure, Authority delegations (Government agencies), Indians—lands, Intergovernmental relations, Mineral royalties, Oil and gas exploration, Public lands—mineral resources, Reporting and recordkeeping requirements.

30 CFR Part 241

Administrative practice and procedure, Continental shelf, Government contracts, Indians—lands, Mineral royalties, Oil and gas exploration, Penalties, Public lands—mineral resources, Sulfur.

30 CFR Part 243

Administrative practice and procedure, Government contracts, Mineral royalties, Public lands—mineral resources.

30 CFR Part 290

Administrative practice and procedure.

30 CFR Part 1201

Government contracts, Mineral royalties, Oil and gas exploration, Public Lands—mineral resources.

30 CFR Part 1202

Coal, Continental shelf, Geothermal energy, Government contracts, Indians—lands, Mineral royalties, Oil and gas exploration, Public lands—mineral resources, Reporting and recordkeeping requirements, Sulfur.

30 CFR Part 1203

Continental shelf, Government contracts, Indians—lands, Mineral royalties, Public lands—mineral resources.

30 CFR Part 1204

Accounting and auditing relief, Barrels of oil equivalent (BOE), Continental shelf, Federal lease, Marginal property, Mineral royalties, Royalty prepayment, Royalty relief.

30 CFR Part 1206

Coal, Continental shelf, Geothermal energy, Government contracts, Indians—lands, Mineral royalties, Oil and gas exploration, Public lands—mineral resources, Reporting and recordkeeping requirements.

30 CFR Part 1207

Continental shelf, Government contracts, Indians—lands, Mineral royalties, Public lands—mineral resources, Reporting and recordkeeping requirements.

30 CFR Part 1208

Continental shelf, Government contracts, Mineral royalties, Petroleum, Public lands—mineral resources, Reporting and recordkeeping requirements, Small businesses, Surety bonds.

30 CFR Part 1210

Continental shelf, Geothermal energy, Government contracts, Indians—lands, Mineral royalties, Oil and gas exploration, Public lands—mineral resources, Reporting and recordkeeping requirements, Sulfur.

30 CFR Part 1212

Continental shelf, Geothermal energy, Government contracts, Indians—lands, Mineral royalties, Oil and gas exploration, Public lands—mineral resources, Reporting and recordkeeping requirements.

30 CFR Part 1217

Coal, Government contracts, Mineral royalties, Oil and gas exploration, Public lands—mineral resources, Reporting and recordkeeping requirements.

30 CFR Part 1218

Continental shelf, Electronic funds transfers, Geothermal energy, Indians—lands, Mineral royalties, Oil and gas exploration, Public lands—mineral resources, Reporting and recordkeeping requirements.

30 CFR Part 1219

Government contracts, Indians—lands, Mineral royalties, Oil and gas exploration, Public lands—mineral resources.

30 CFR Part 1220

Accounting, Continental shelf, Government contracts, Mineral royalties, Oil and gas exploration, Public lands—mineral resources, Reporting and recordkeeping requirements.

30 CFR Part 1227

Administrative practice and procedure, Mineral royalties, Reporting and recordkeeping requirements.

30 CFR Part 1228

Accounting, Administrative practice and procedure, Indians—lands, Intergovernmental relations, Mineral royalties, Oil and gas exploration, Public lands—mineral resources, Reporting and recordkeeping requirements.

30 CFR Part 1229

Accounting, Administrative practice and procedure, Authority delegations (Government agencies), Indians—lands, Intergovernmental relations, Mineral royalties, Oil and gas exploration, Public lands—mineral resources, Reporting and recordkeeping requirements.

30 CFR Part 1241

Administrative practice and procedure, Continental shelf, Government contracts, Indians—lands, Mineral royalties, Oil and gas exploration, Penalties, Public lands—mineral resources, Sulfur.

30 CFR Part 1243

Administrative practice and procedure, Government contracts, Mineral royalties, Public lands—mineral resources.

30 CFR Part 1290

Administrative practice and procedure.

Dated: September 28, 2010

David J. Hayes,

Deputy Secretary, Department of the Interior.

Authority and Issuance

■ For the reasons discussed in the preamble, under the authority provided by the Reorganization Plan No. 3 of 1950 (64 Stat. 1262), the Department of the Interior amends title 30 CFR Chapter II and establishes a new 30 CFR Chapter XII as follows:

TITLE 30—MINERAL RESOURCES

CHAPTER II—BUREAU OF OCEAN ENERGY MANAGEMENT, REGULATION, AND ENFORCEMENT, DEPARTMENT OF THE INTERIOR

■ 1. Revise the heading of 30 CFR chapter II to read as set forth above.

CHAPTER XII—OFFICE OF NATURAL RESOURCES REVENUE, DEPARTMENT OF THE INTERIOR

Subchapter A—Natural Resources Revenue

Subchapter B—Appeals

■ 2. Amend title 30 of the CFR by establishing chapter XII and its subchapters to read as set forth above.

Chapter II, Subchapter A

■ 2A. Remove reserved part 200 from subchapter A.

PART 201—[REDESIGNATED AS PART 1201]

■ 3. Transfer 30 CFR part 201 from chapter II, subchapter A, to chapter XII, subchapter A, and redesignate as 30 CFR part 1201.

Chapter XII, Subchapter A

PART 1201—GENERAL

■ 4. The authority citation for the newly redesignated 30 CFR part 1201 continues to read as follows:

Authority: The Act of February 25, 1920 (30 U.S.C. 181, *et seq.*), as amended; the Act of May 21, 1930 (30 U.S.C. 301–306); the Mineral Leasing Act for Acquired Lands (30 U.S.C. 351–359), as amended; the Act of March 3, 1909 (25 U.S.C. 396), as amended; the National Environmental Policy Act of 1969 (42 U.S.C. 4321, *et seq.*) as amended; the Act of May 11, 1938 (25 U.S.C. 396a–396q), as amended; the Act of February 28, 1891 (25 U.S.C. 397), as amended; the Act of May 29, 1924 (25 U.S.C. 398); the Act of March 3, 1927 (25 U.S.C. 398a–398e); the Act of June 30, 1919 (25 U.S.C. 399), as amended; R.S. § 441 (43 U.S.C. 1457), see also Attorney General's Opinion of April 2, 1941 (40 Op. Atty. Gen. 41); the Federal Property and Administrative Services Act of 1949 (40 U.S.C. 471, *et seq.*), as amended; the National Environmental Policy Act of 1969 (42 U.S.C. 4321 *et seq.*), as amended; the Act of December 12, 1980 (Pub. L. 96–514, 94 Stat. 2964); the Combined Hydrocarbon Leasing Act of 1981 (Pub. L. 97–78, 95 Stat. 1070); the Outer Continental Shelf Lands Act (43 U.S.C. 1331, *et seq.*), as amended; section 2 of Reorganization Plan No. 3 of 1950 (64 Stat. 1262); Secretarial Order No. 3071 of January 19, 1982, as amended; and Secretarial Order 3087, as amended.

■ 5. Amend the newly redesignated part 1201 as follows:

AMENDMENT TABLE FOR PART 1201

Amend	By removing the reference to:	And adding in its place:
§ 1201.100 (section heading)	Associate Director for Minerals Revenue Management.	Director for Office of Natural Resources Revenue.
§ 1201.100 (introductory text)	Associate Director	Director.

Chapter II, Subchapter A

PART 202—[REDESIGNATED AS PART 1202]

■ 6. Transfer 30 CFR part 202 from chapter II, subchapter A, to chapter XII, subchapter A, and redesignate as 30 CFR part 1202.

Chapter XII, Subchapter A

PART 1202—ROYALTIES

■ 7. The authority citation for the newly redesignated 30 CFR part 1202 continues to read as follows:

Authority: 5 U.S.C. 301 *et seq.;* 25 U.S.C. 396 *et seq.,* 396a *et seq.,* 2101 *et seq.;* 30 U.S.C. 181 *et seq.,* 351 *et seq.,* 1001 *et seq.;* 1701 *et seq.;* 31 U.S.C. 9701; 43 U.S.C. 1301 *et seq.;* 1331 *et seq.,* 1801 *et seq.*

■ 8. Amend the newly redesignated part 1202 as follows:

AMENDMENT TABLE FOR PART 1202

Amend	By removing the reference to:	And adding in its place:
§ 1202.51(b)	part 206	part 1206.
§ 1202.100(a)	MMS	the Office of Natural Resources Revenue (ONRR).
§ 1202.100(a)	part 206	part 1206.
§ 1202.100(b)(1)	MMS	Bureau of Ocean Energy Management, Regulation, and Enforcement (BOEMRE).

AMENDMENT TABLE FOR PART 1202—Continued

Amend	By removing the reference to:	And adding in its place:
§ 1202.100(b)(2)	MMS	BOEMRE.
§ 1202.100(c)	MMS	BOEMRE.
§ 1202.100(c)	part 206	part 1206.
§ 1202.100(e)(1) (two times)	part 206	part 1206.
§ 1202.100(e)(2)	MMS	ONRR.
§ 1202.100(f)	MMS	ONRR.
§ 1202.150(a)	MMS	ONRR.
§ 1202.150(a)	part 206	part 1206.
§ 1202.150(b)(1)	MMS	BOEMRE.
§ 1202.150(b)(2)	MMS	BOEMRE.
§ 1202.150(c)	MMS	BOEMRE.
§ 1202.150(c)	part 206	part 1206.
§ 1202.150(e)(1) (two times)	part 206	part 1206.
§ 1202.150(e)(2)	MMS	ONRR.
§ 1202.150(f)	MMS	ONRR.
§ 1202.151(a)(2)	MMS	ONRR.
§ 1202.151(a)(2) (two times)	part 206	part 1206.
§ 1202.151(b)	part 206	part 1206.
§ 1202.151(c)	MMS	BOEMRE.
§ 1202.350(b)	30 CFR 206.351	§ 1206.351.
§ 1202.351(a)(1)	part 206	part 1206.
§ 1202.351(a)(2)	part 206	part 1206.
§ 1202.351(a)(3)	§ 218.306	§ 1218.306.
§ 1202.351(b)(2) introductory text	30 CFR 206.351	§ 1206.351.
§ 1202.351(b)(2)(i) introductory text	MMS	ONRR.
§ 1202.351(b)(2)(ii) introductory text	MMS	ONRR.
§ 1202.351(b)(2)(iii)	30 CFR 206.351	§ 1206.351.
§ 1202.351(b)(3)	MMS	ONRR.
§ 1202.351(c)	part 206	part 1206.
§ 1202.353(a)(1)	§ 206.352(a)	§ 1206.352(a).
§ 1202.353(a)(2)	§ 206.352(b)	§ 1206.352(b).
§ 1202.353(b)(4)	MMS	ONRR.
§ 1202.353(c)	MMS-established	ONRR-established.
§ 1202.353(e)	MMS	ONRR.
§ 1202.550(b)(2)	MMS	ONRR.
§ 1202.550(c)(1)	part 206	part 1206.
§ 1202.550(e)	part 218	part 1218.
§ 1202.551(a)	§§ 202.555, 202.556, and 202.557	§§ 1202.555, 1202.556, and 1202.557.
§ 1202.551(c) (two times)	MMS	ONRR.
§ 1202.551(c)	part 206	part 1206.
§ 1202.552(b)	part 206	part 1206.
§ 1202.552(b)	§ 202.553	§ 1202.553.
§ 1202.552(b)	§ 202.554	§ 1202.554.
§ 1202.553	part 206	part 1206.
§ 1202.554(a)	part 206	part 1206.
§ 1202.554(c) (two times)	§ 206.172(b)	§ 1206.172(b).
§ 1202.554(d) introductory text	§ 206.172(b)	§ 1206.172(b).
§ 1202.554(d)(1)	part 206	part 1206.
§ 1202.554(d)(2)	part 206	part 1206.
§ 1202.554(d)(3)	part 206	part 1206.
§ 1202.554(d)(4)	part 206	part 1206.
§ 1202.554(d)(5)	MMS	ONRR.
§ 1202.554(d)(5)	30 CFR 206.174	§ 1206.174.
§ 1202.554(d)(5)	MMS-designated	ONRR-designated.
§ 1202.555(a)(4)	30 CFR 206.179(e)	§ 1206.179(e).
§ 1202.556	part 206	part 1206.

Chapter II, Subchapter A

PART 203—[AMENDED]

■ 9. Transfer 30 CFR part 203, subpart F (§§ 203.250–203.251), from chapter II, subchapter A, to 30 CFR, chapter XII, subchapter A, and redesignate as "Part 1203—Relief or Reduction in Royalty Rates—Coal" (§§ 1203.250 and 1203.251)

Subpart F—[Reserved]

■ 10. Add and reserve a new subpart F to part 203 to read as set forth above.

Chapter XII, Subchapter A

PART 1203—RELIEF OR REDUCTION IN ROYALTY RATES—COAL

■ 11. Add an authority citation for the newly redesignated 30 CFR part 1203 to read as follows:

Authority: 25 U.S.C. 396 *et seq.;* 25 U.S.C. 396a *et seq.;* 25 U.S.C. 2101 *et seq.;* 30 U.S.C. 181 *et seq.;* 30 U.S.C. 351 *et seq.;* 30 U.S.C. 1701 *et seq.;* 31 U.S.C. 9701; 43 U.S.C. 1301 *et seq.;* and 43 U.S.C. 1331 *et seq.*

Chapter II, Subchapter A

PART 204—[REDESIGNATED AS PART 1204]

■ 12. Transfer 30 CFR part 204 from chapter II, subchapter A, to chapter XII,

subchapter A, and redesignate as 30 CFR part 1204.

Chapter XII, Subchapter A

PART 1204—ALTERNATIVES FOR MARGINAL PROPERTIES

■ 13. The authority citation for the newly redesignated 30 CFR part 1204 continues to read as follows:

Authority: 30 U.S.C. 1701 *et seq.*

■ 14. Amend the newly redesignated part 1204 as follows:

AMENDMENT TABLE FOR PART 1204

Amend	By removing the reference to:	And adding in its place:
§ 1204.2, definition of *Designee*	30 CFR 218.52	§ 1218.52.
§ 1204.2, definition of Producing wells.	§ 204.4(c)	§ 1204.4(c).
§ 1204.2, definition of Property	§ 204.4	§ 1204.4.
§ 1204.3 introductory text	MMS	ONRR.
§ 1204.3(a)	MMS	ONRR.
§ 1204.3(b)	MMS	ONRR.
§ 1204.5(a) introductory text (two times)	MMS	ONRR.
§ 1204.5(a)(2)	MMS	ONRR.
§ 1204.5(b) introductory text (two times)	MMS	ONRR.
§ 1204.5(b)(1) introductory text	MMS	ONRR.
§ 1204.5(b)(1)(i)	§ 204.202	§ 1204.202.
§ 1204.5(b)(1)(ii)	§ 204.203	§ 1204.203.
§ 1204.5(b)(1)(ii)	MMS	ONRR.
§ 1204.5(b)(2)	MMS's	ONRR's.
§ 1204.6 (section heading and introductory text)..	MMS	ONRR.
§ 1204.6	§ 204.203	§ 1204.203.
§ 1204.6	part 290	part 1290.
§ 1204.200	§ 204.202	§ 1204.202.
§ 1204.200	§ 204.203	§ 1204.203.
§ 1204.201(a)(1)	§ 204.4	§ 1204.4.
§ 1204.201(b)(2)	§ 204.208	§ 1204.208.
§ 1204.202(b)(1)	§ 204.205(a)	§ 1204.205(a)
§ 1204.202(b)(1)	MMS	ONRR.
§ 1204.202(b)(2)	§ 218.51(g)	§ 1218.51(g).
§ 1204.202(c)	§ 218.54	§ 1218.54.
§ 1204.202(c)	MMS	ONRR.
§ 1204.202(d)(1)	30 CFR 218.54	§ 1218.54.
§ 1204.202(d)(1) (two times)	MMS	ONRR.
§ 1204.202(e)(2)	30 CFR 218.54	§ 1218.54.
§ 1204.203(a) introductory text	§ 204.204	§ 1204.204.
§ 1204.203(a) introductory text	§ 204.5	§ 1204.5.
§ 1204.203(a)(1) (two times)	part 206	part 1206.
§ 1204.203(a)(2) (two times)	MMS	ONRR.
§ 1204.203(b)	MMS	ONRR.
§ 1204.203(b)	§ 204.205(b)	§ 1204.205(b).
§ 1204.203(b)	§ 204.206	§ 1204.206.
§ 1204.204 (section heading and introductory text).	MMS	ONRR.
§ 1204.204(a)	MMS	ONRR.
§ 1204.204(e)	MMS's	ONRR's.
§ 1204.204(j)	§ 204.208	§ 1204.208.
§ 1204.205(a) introductory text	§ 204.202	§ 1204.202.
§ 1204.205(a) introductory text	MMS	ONRR.
§ 1204.205(a)(1)(i)	MMS-assigned	ONRR-assigned.
§ 1204.205(a)(1)(ii)	MMS	ONRR.
§ 1204.205(b) introductory text	§ 204.203	§ 1204.203.
§ 1204.205(b) introductory text	MMS	ONRR.
§ 1204.205(b)(1)(i)	MMS-assigned	ONRR-assigned.
§ 1204.205(b)(1)(ii)	MMS	ONRR.
§ 1204.206 introductory text	§ 204.205(b)	§ 1204.205(b).
§ 1204.206 (section heading and introductory text).	MMS	ONRR.
§ 1204.206 introductory text	§ 204.205(b)	§ 1204.205(b).
§ 1204.206(a) introductory text	MMS	ONRR.
§ 1204.206(a) introductory text	§ 204.207(b)	§ 1204.207(b).
§ 1204.206(a)(1) (two times)	MMS	ONRR.
§ 1204.206(a)(2) (two times)	MMS	ONRR.
§ 1204.206(a)(2)	§ 204.6	§ 1204.6.
§ 1204.206(a)(3) introductory text (two times)	MMS	ONRR.
§ 1204.206(a)(3)(i)	MMS's	ONRR's.
§ 1204.206(a)(3)(ii) (two times)	MMS	ONRR.
§ 1204.206(a)(3)(ii)	MMS's	ONRR's.

AMENDMENT TABLE FOR PART 1204—Continued

Amend	By removing the reference to:	And adding in its place:
§ 1204.206(a)(3)(ii)	§ 204.6	§ 1204.6.
§ 1204.206(b) introductory text	MMS	ONRR.
§ 1204.206(b)(1)	MMS's	ONRR's.
§ 1204.206(b)(2)	MMS	ONRR.
§ 1204.206(b)(3) (two times)	MMS	ONRR.
§ 1204.206(b)(3)	MMS's	ONRR's.
§ 1204.206(b)(3)	§ 204.6	§ 1204.6.
§ 1204.206(b)(4)	MMS	ONRR.
§ 1204.207(a)	MMS	ONRR.
§ 1204.208(a)	MMS	ONRR.
§ 1204.208(b)	MMS	ONRR.
§ 1204.208(c)(1)	Associate Director for Minerals Revenue Management, MMS.	Director for Office of Natural Resources Revenue.
§ 1204.208(c)(2)	MMS	ONRR.
§ 1204.208(d)(1)	Associate Director for Minerals Revenue Management, MMS.	Director for Office of Natural Resources Revenue.
§ 1204.208(d)(2)	MMS	ONRR.
§ 1204.208(e)	MMS	ONRR.
§ 1204.208(f)	MMS	ONRR.
§ 1204.209(a)	MMS	ONRR.
§ 1204.209(a)	§ 204.205	§ 1204.205.
§ 1204.209(b)	§ 204.210	§ 1204.210.
§ 1204.209(b)	MMS	ONRR.
§ 1204.209(c)	§ 204.202(e)	§ 1204.202(e).
§ 1204.210 introductory text	MMS's Offshore Minerals Management (OMM).	BOEMRE.
§ 1204.210(a)	MMS	ONRR.
§ 1204.210(a)	§ 204.211	§ 1204.211.
§ 1204.210(b)	OMM	BOEMRE.
§ 1204.210(c) (two times)	OMM	BOEMRE.
§ 1204.210(c)	§ 204.202(b)	§ 1204.202(b).
§ 1204.210(d)	MMS	ONRR.
§ 1204.210(d)	§ 204.202(b)	§ 1204.202(b).
§ 1204.210(d)	30 CFR 218.54	§ 1218.54.
§ 1204.210(d)	§ 204.202(b)(2)	§ 1204.202(b)(2)
§ 1204.211 (section heading)	MMS	ONRR.
§ 1204.211(a) introductory text (two times)	MMS	ONRR.
§ 1204.211(a)(1)	§ 204.205	§ 1204.205
§ 1204.211(a)(2)	MMS	ONRR.
§ 1204.211(a)(2)	§ 204.205	§ 1204.205
§ 1204.211(a)(3)	§ 204.209(b)	§ 1204.209(b)
§ 1204.211(b) (two times)	MMS	ONRR.
§ 1204.212(a)	30 CFR 218.54	§ 1218.54
§ 1204.212(a)	MMS	ONRR.
§ 1204.215	part 210	part 1210

Chapter II, Subchapter A

PART 206—[REDESIGNATED AS PART 1206]

■ 15. Transfer 30 CFR part 206 from chapter II, subchapter A, to chapter XII, subchapter A, and redesignate as 30 CFR part 1206.

Chapter XII, Subchapter A

PART 1206—PRODUCT VALUATION

■ 16. The authority citation for the newly redesignated 30 CFR part 1206 continues to read as follows:

Authority: 5 U.S.C. 301 *et seq.;* 25 U.S.C. 396 *et seq.,* 396a *et seq.,* 2101 *et seq.;* 30 U.S.C. 181 *et seq.,* 351 *et seq.,* 1001 *et seq.,* 1701 *et seq.;* 31 U.S.C. 9701; 43 U.S.C. 1301 *et seq.,* 1331 *et seq.,* and 1801 *et seq.*

■ 17. Amend the newly redesignated part 1206 as follows:

AMENDMENT TABLE FOR PART 1206

Amend	By removing the reference to:	And adding in its place:
§ 1206.10	30 CFR 210.10	§ 1210.10.
§ 1206.50(b)92) (two times)	MMS	ONRR.
§ 1206.50(c)	MMS	ONRR.
1206.51, definition of *Affiliate,* paragraph (1)	MMS	ONRR.
§ 1206.51, definition of *Affiliate,* paragraph (2)	MMS	ONRR.
§ 1206.51, definition of *Lessee,* paragraph (2)	MMS	ONRR.
§ 1206.51, definition of *MMS*	MMS	ONRR.
§ 1206.51, definition of *MMS*	Minerals Management Service	Office of Natural Resources Revenue.

AMENDMENT TABLE FOR PART 1206—Continued

Amend	By removing the reference to:	And adding in its place:
§ 1206.52(a) introductory text	§§ 206.56 and 206.57	§§ 1206.56 and 1206.57.
§ 1206.52(c), introductory text	MMS	ONRR.
§ 1206.52(c)(2) introductory text	MMS	ONRR.
§ 1206.52(c)(2)	MMS	ONRR.
§ 1206.52(c)(2)(ii)	MMS	ONRR.
§ 1206.52(e)(1)	§§ 206.56 and 206.57	§§ 1206.56 and 1206.57.
§ 1206.52(e)(2)	§§ 206.56 and 206.57	§§ 1206.56 and 1206.57.
§ 1206.52(e)(3) two times	MMS	ONRR.
§ 1206.52(e)(4) introductory text	MMS	ONRR.
§ 1206.52(e)(4) introductory text	§§ 206.56 and 206.57	§§ 1206.56 and 1206.57.
§ 1206.53(e)(5) two times	MMS	ONRR.
§ 1206.52g	§ 206.54	§ 1206.54.
§ 1206.53(a)(2)	§§ 206.56 and 206.57	§§ 1206.56 and 1206.57.
§ 1206.53(a)(3)	§§ 206.56 and 206.57	§§ 1206.56 and 1206.57.
§ 1206.52(c) introductory text	MMS	ONRR.
§ 1206.52(c) introductory text	§§ 206.56 and 206.57	§§ 1206.56 and 1206.57.
§ 1206.53(d)	MMS	ONRR.
§ 1206.53(e)	§ 206.54	§ 1206.54.
§ 1206.54(a)	MMS	ONRR.
§ 1206.55	§ 206.52	§ 1206.52.
§ 1206.56(a)	§ 206.52 or § 206.53	§ 1206.52 or § 1206.53.
§ 1206.56(a)	MMS	ONRR.
§ 1206.56(b)(1)	§ 206.52	§ 1206.52.
§ 1206.56(b)(2) (two times)	MMS	ONRR.
§ 1206.56(c)	§ 206.57	§ 1206.57
§ 1206.56(d)	MMS	ONRR.
§ 1206.56(d)	30 CFR 218.54	§ 1218.54 of this chapter.
§ 1206.57(a)(1)(i) (two times)	MMS	ONRR.
§ 1206.57(a)(1)(ii) (two times)	MMS	ONRR.
§ 1206.57(a)(1)(iii) (four times)	MMS	ONRR.
§ 1206.57(a)(2)(i)	MMS	ONRR.
§ 1206.57(a)(2)(ii) (two times)	MMS	ONRR.
§ 1206.57(a)(3) (five times)	MMS	ONRR.
§ 1206.57(a)(5) (two times)	MMS	ONRR.
§ 1206.57(b)(1) (four times)	MMS	ONRR.
§ 1206.57(b)(2)(iv) introductory text	MMS	ONRR.
§ 1206.57(b)(2)(iv)(A)	MMS	ONRR.
§ 1206.57(b)(2)(iv)(B)	MMS	ONRR.
§ 1206.57(b)(3)(i)	MMS	ONRR.
§ 1206.57(b)(3)(ii) (two times)	MMS	ONRR.
§ 1206.57(b)(4) (five times)	MMS	ONRR.
§ 1206.57(b)(5) introductory text (four times)	MMS	ONRR.
§ 1206.57(b)(5)(i)	MMS	ONRR.
§ 1206.57(c)(1)(iii)	MMS	ONRR.
§ 1206.57(c)(1)(iv) (two times)	MMS	ONRR.
§ 1206.57(c)(1)(v)	MMS	ONRR.
§ 1206.57(c)(1)(vi)	MMS	ONRR.
§ 1206.57(c)(2)(iii) (two times)	MMS	ONRR.
§ 1206.57(c)(2)(v)	MMS	ONRR.
§ 1206.57(c)(2)(vi) (two times)	MMS	ONRR.
§ 1206.57(c)(2)(vii)	MMS	ONRR.
§ 1206.57(c)(3)	MMS	ONRR.
§ 1206.57(c)(4)	MMS	ONRR.
§ 1206.57(d)(3)	30 CFR 218.54	§ 1218.56 of this chapter.
§ 1206.57(e)(1)	30 CFR 218.54	§ 1218.54 of this chapter.
§ 1206.57(e)(2)	MMS	ONRR.
§ 1206.58 (section heading)	MMS	ONRR.
§ 1206.58(a) introductory text	MMS	ONRR.
§ 1206.58(a)(1)	MMS	ONRR.
§ 1206.58(a)(2)	§ 218.54	§ 1218.54.
§ 1206.58(b)	§ 218.53	§ 1218.53.
§ 1206.59 (section heading)	MMS	ONRR.
§ 1206.59 (three times)	MMS	ONRR.
§ 1206.60(b)	§§ 206.52, 206.53, or 206.54	§§ 1206.52, 1206.53, or 1206.54.
§ 1206.61(a)	MMS	ONRR.
§ 1206.61(b)	§§ 207.5, 212.50, and 212.51	§§ 1207.5, 1212.50, and 1212.51.
§ 1206.61(b) (two times)	MMS	ONRR.
§ 1206.62 (section heading)	MMS	ONRR.
§ 1206.62	MMS	ONRR.
§ 1206.100(d)(3) (two times)	MMS	ONRR.
§ 1206.100(e)	MMS	ONRR.
§ 1206.101, definition of *Affiliate,* paragraph (1)	MMS	ONRR.

AMENDMENT TABLE FOR PART 1206—Continued

Amend	By removing the reference to:	And adding in its place:
§ 1206.101, definition of *Affiliate,* paragraph (2)	MMS	ONRR.
§ 1206.101, definition of *Field*	MMS	ONRR.
§ 1206.101, definition of *Gathering*	MMS	ONRR.
§ 1206.101, definition of *Market center*	MMS	ONRR.
§ 1206.101, definition of *Market center*	MMS-approved	ONRR-approved.
§ 1206.101, definition of *MMS-approved publication.*	MMS-approved	ONRR-approved.
§ 1206.101, definition of *MMS-approved publication.*	MMS	ONRR.
§ 1206.102(a) introductory text	§§ 206.110 or 206.111	§§ 1206.110 or 1206.111.
§ 1206.102(c)(1) (two times)	MMS	ONRR.
§ 1206.102(c)(1)	§ 206.103	§ 1206.103.
§ 1206.102(c)(2) introductory text	§ 206.103	§ 1206.103.
§ 1206.102(c)(2) introductory text	MMS	ONRR.
§ 1206.102(c)(2)(ii)(A)	MMS	ONRR.
§ 1206.102(c)(2)(ii)(B)	MMS	ONRR.
§ 1206.102(d)(1) introductory text	§ 206.102(a) or § 206.103	§ 1206.102(a) or § 1206.103.
§ 1206.102(d)(1)(i)	§ 206.102(a)	§ 1206.102(a).
§ 1206.102(d)(1)(i) (two times)	MMS	ONRR.
§ 1206.102(d)(1)(i)	§ 206.103	§ 1206.103.
§ 1206.102(d)(1)(ii)	§ 206.102(d)(1) to use § 206.102(a) or § 206.103.	§ 1206.102(d)(1) to use § 1206.102(a) or § 1206.103.
§ 1206.102(d)(2)(i)	§ 206.102(a) or § 206.103	§ 1206.102(a) or § 1206.103.
§ 1206.102(d)(2)(ii)	§ 206.102(d)(2)(i) to use § 206.102(a) or § 206.103.	§ 1206.102(d)(2)(i) to use § 1206.102(a) or § 1206.103.
§ 1206.102(e)(1)	MMS	ONRR.
§ 1206.103 introductory text	§ 206.102	§ 1206.102.
§ 1206.103 introductory text	§ 206.102(d)	§ 1206.102(d).
§ 1206.103 introductory text	MMS	ONRR.
§ 1206.103(a) introductory text (two times)	MMS-approved	ONRR-approved.
§ 1206.103(a)(3)	§ 206.112	§ 1206.112.
§ 1206.103(a)(4)	MMS-approved	ONRR-approved.
§ 1206.103(a)(4)	MMS	ONRR.
§ 1206.103(b) introductory text	§ 206.102	§ 1206.102.
§ 1206.103(b) introductory text	§ 206.102(d)	§ 1206.102(d).
§ 1206.103(b)(1) introductory text	MMS-approved	ONRR-approved.
§ 1206.103(b)(1)(i) introductory text	MMS	ONRR.
§ 1206.103(b)(1)(ii)	MMS-approved	ONRR-approved.
§ 1206.103(b)(3)	§ 206.112	§ 1206.112.
§ 1206.103(b)(4)	MMS's	ONRR's.
§ 1206.103(b)(4)	MMS	ONRR.
§ 1206.103(c)(1)	§ 206.112	§ 1206.112.
§ 1206.103(c)(2) (three times)	MMS	ONRR.
§ 1206.103(d) (two times)	MMS	ONRR.
§ 1206.103(e)(1)	MMS	ONRR.
§ 1206.103(e)(2)(iv)	MMS	ONRR.
§ 1206.103(e)(3)	MMS	ONRR.
§ 1206.103(e)(3)	§ 206.112(b)	§ 1206.112(b).
§ 1206.104 (section heading)	MMS	ONRR.
§ 1206.104(a) introductory text	MMS	ONRR.
§ 1206.104(a)(4)	MMS	ONRR.
§ 1206.104(b)	MMS	ONRR.
§ 1206.104(c)	MMS	ONRR.
§ 1206.104(d)	MMS	ONRR.
§ 1206.105(b)	part 207	part 207.
§ 1206.105(c) (two times)	MMS	ONRR.
§ 1206.107(a) introductory text	MMS	ONRR.
§ 1206.107(a)(3)	MMS	ONRR.
§ 1206.107(b) (two times)	MMS	ONRR.
§ 1206.107(b)(1)	Land and Minerals Management	Policy, Management and Budget.
§ 1206.107(b)(2)	MMS	ONRR.
§ 1206.107(b)(3) (two times)	MMS	ONRR.
§ 1206.107(c)(1)	Land and Minerals Management	Policy, Management and Budget.
§ 1206.107(c)(1)	MMS	ONRR.
§ 1206.107(c)(2)	30 CFR 218.54	§ 1218.54 of this chapter.
§ 1206.107(d) introductory text (three times)	MMS.	
§ 1206.107(d) introductory text	MMS-issued	ONRR-issued.
§ 1206.107(d)(1)	MMS	ONRR.
§ 1206.107(d)(1)	part 290, subpart B	part 1290.
§ 1206.107(d)(2)	part 290, subpart B	part 1290.
§ 1206.107(e)	MMS	ONRR.
§ 1206.107(f)	MMS	ONRR.

AMENDMENT TABLE FOR PART 1206—Continued

Amend	By removing the reference to:	And adding in its place:
§ 1206.107(g) introductory text	MMS	ONRR.
§ 1206.107(h)	MMS	ONRR.
§ 1206.107(h)	§ 206.108	§ 1206.108.
§ 1206.108 (section heading)	MMS	ONRR.
§ 1206.108 (two times)	MMS	ONRR.
§ 1206.109(a) introductory text	MMS	ONRR.
§ 1206.109(a) introductory text	§§ 206.110 or 206.111	§§ 1206.110 or 1206.111.
§ 1206.109(a)(1)	§ 206.102	§ 1206.102.
§ 1206.109(b)	§ 206.103	§ 1206.103
§ 1206.109(b)	MMS	ONRR.
§ 1206.109(b)	§ 206.112	§ 1206.112.
§ 1206.109(c)(1)	§ 206.102 or § 206.103	§ 1206.102 or § 1206.103.
§ 1206.109(c)(2) (two times)	MMS	ONRR.
§ 1206.109(d)	§§ 206.110 and 206.111	§§ 1206.110 and 1206.111.
§ 1206.109(e) (two times)	MMS	ONRR.
§ 1206.109(e)	30 CFR 218.54	§ 1218.54 of this chapter.
§ 1206.109(e)	§ 206.116	§ 1206.116
§ 1206.110(a) introductory text	§ 206.109(c)	§ 1206.109(c).
§ 1206.110(a) introductory text	MMS	ONRR.
§ 1206.110(a)(1) (two times)	MMS	ONRR.
§ 1206.110(a)(1)	§ 206.111	§ 1206.111
§ 1206.110(a)(2) introductory text	§ 206.111.	
§ 1206.110(a)(2) introductory text	MMS	ONRR.
§ 1206.110(a)(2)(ii)(A)	MMS	ONRR.
§ 1206.110(a)(2)(ii)(B)	MMS	ONRR.
§ 1206.110(b)(4)(i)	§ 206.102 or § 206.103	§ 1206.102 or § 1206.103.
§ 1206.110(b)(4)(ii)	§ 206.111(i)(2)	§ 1206.111(i)(2).
§ 1206.110(d)(3) (two times)	MMS	ONRR.
§ 1206.110(e) introductory text	MMS	ONRR.
§ 1206.110(e)(1) (two times)	MMS	ONRR.
§ 1206.110(g)(2)	MMS	ONRR.
§ 1206.111(b)(6)(ii)(A)	§ 206.102 or § 206.103	§ 1206.102 or § 1206.103.
§ 1206.111(b)(6)(ii)(B)	§ 206.111(i)(2)	§ 1206.111(i)(2).
§ 1206.111(g)	MMS	ONRR.
§ 1206.111(k)(2) (two times)	MMS	ONRR.
§ 1206.111(l)(1)	MMS	ONRR.
§ 1206.111(l)(2) (two times)	MMS	ONRR.
§ 1206.112 introductory text	§ 206.103	§ 1206.103
§ 1206.112 introductory text	MMS-recognized	ONRR-recognized.
§ 1206.112(a)(1)(ii) (two times)	MMS	ONRR.
§ 1206.112(a)(1)(ii) (two times)	MMS's	ONRR's.
§ 1206.112(a)(2)	§ 206.110 or § 206.111	§ 1206.110 or § 1206.111.
§ 1206.112(a)(4) (two times)	MMS	ONRR.
§ 1206.112(a)(4) (two times)	MMS's	ONRR's.
§ 1206.112(b)(2) (two times)	MMS-approved	ONRR-approved.
§ 1206.112(b)(2)	MMS	ONRR.
§ 1206.112(b)(3) (two times)	MMS	ONRR.
§ 1206.112(b)(3) (two times)	MMS's	ONRR's.
§ 1206.112(c)(1)	MMS	BOEMRE.
§ 1206.112(c)(2)	MMS	ONRR.
§ 1206.112(d)(3) (three times)	MMS	ONRR.
§ 1206.113 (section heading)	MMS	ONRR.
§ 1206.113 introductory text (three times)	MMS	ONRR.
§ 1206.113(a)	MMS-approved	ONRR-approved.
§ 1206.114 (two times)	MMS	ONRR.
§ 1206.114	part 207	part 1207.
§ 1206.115(a)	MMS	ONRR.
§ 1206.115(b)	§ 206.117	1206.117.
§ 1206.115(c)	MMS	ONRR.
§ 1206.115(c)	part 207	part 1207.
§ 1206.116(a)	MMS's	ONRR's.
§ 1206.116(a)	§ 206.109	§ 1206.109.
§ 1206.116(a) (two times)	MMS	ONRR.
§ 1206.116(b)	MMS	ONRR.
§ 1206.116(b)	part 241	part 1241.
§ 1206.117(a)	30 CFR 218.54	§ 1218.54 of this chapter.
§ 1206.119(a)	MMS	BOEMRE.
§ 1206.119(b)	MMS	BOEMRE.
§ 1206.119(c)	MMS	BOEMRE.
§ 1206.120 (two times)	MMS	BOEMRE.
§ 1206.150(b)(3) (two times)	MMS	ONRR.
§ 1206.150(c)	MMS	ONRR.

AMENDMENT TABLE FOR PART 1206—Continued

Amend	By removing the reference to:	And adding in its place:
§ 1206.151, definition of *Affiliate,* paragraph (1)	MMS	ONRR.
§ 1206.151, definition of *Affiliate,* paragraph (2)	MMS	ONRR.
§ 1206.151, definition of *Field*	MMS	BOEMRE.
§ 1206.151, definition of *Gathering*	MMS	BOEMRE.
§ 1206.152(a)(1)	§ 206.155	§ 1206.155.
§ 1206.152(a)(1)	§ 206.153	§ 1206.153.
§ 1206.152(b)(1)(ii) (two times)	MMS	ONRR.
§ 1206.152(b)(1)(iii) (four times)	MMS	ONRR.
§ 1206.152(b)(1)(iv)	MMS	ONRR.
§ 1206.152(b)(2) (two times)	MMS	ONRR.
§ 1206.152(b)(3)	MMS	ONRR.
§ 1206.152(d)(1)	MMS	ONRR.
§ 1206.152(e)(1)	MMS	ONRR.
§ 1206.152(e)(2)	MMS	ONRR.
§ 1206.152(e)(3) (two times)	MMS	ONRR.
§ 1206.152(e)(3)	Associate Director	Associate Director
§ 1206.152(e)(3)	Minerals Revenue Management	Office of Natural Resources Revenue.
§ 1206.152(f) (three times)	MMS	ONRR.
§ 1206.152(f)	30 CFR 218.54	§ 1218.54 of this chapter.
§ 1206.152(g) (seven times)	MMS	ONRR.
§ 1206.152(k)	MMS	ONRR.
§ 1206.152(l)	MMS	ONRR.
§ 1206.153(a)(1)	§ 206.152	§ 1206.152.
§ 1206.153(a)(2)	§ 206.102	§ 1206.102.
§ 1206.153(b)(1)(ii) (two times)	MMS	ONRR.
§ 1206.153(b)(1)(iii) (four times)	MMS	ONRR.
§ 1206.153(b)(1)(iv)	MMS	ONRR.
§ 1206.153(b)(2) (two times)	MMS	ONRR.
§ 1206.153(b)(3)	MMS	ONRR.
§ 1206.153(d)(1)	MMS	ONRR.
§ 1206.153(e)(1)	MMS	ONRR.
§ 1206.153(e)(2)	MMS	ONRR.
§ 1206.153(e)(3) (two times)	MMS	ONRR.
§ 1206.153(e)(3)	Associate Director	Director.
§ 1206.153(e)(3)	Minerals Revenue Management	Office of Natural Resources Revenue.
§ 1206.153(f) (two times)	MMS	ONRR.
§ 1206.153(f)	30 CFR 218.54	§ 1218.54 of this chapter.
§ 1206.153(f)	MMS	ONRR.
§ 1206.153(g) (seven times)	MMS	ONRR.
§ 1206.153(k)	MMS	ONRR.
§ 1206.153(l)	MMS	ONRR.
§ 1206.154(a)(1)	MMS	BOEMRE.
§ 1206.154(a)(2)	§ 206.152	§ 1206.152.
§ 1206.154(a)(2)	MMS	BOEMRE.
§ 1206.154(b)(2)	§ 206.153	§ 1206.153.
§ 1206.154(c)(4)	MMS	ONRR.
§ 1206.154(d)(1)	MMS	BOEMRE.
§ 1206.154(d)(2)	30 CFR 202.151(c)	§ 1202.151(c).
§ 1206.155(a)(1)	§ 206.153	§ 1206.153.
§ 1206.155(a)(1)	§ 206.102	§ 1206.102.
§ 1206.155(a)(2)	§ 206.152	§ 1206.152.
§ 1206.155(b)	§ 206.150(b)	§ 1206.150(b).
§ 1206.156(a)	§ 206.152 or § 206.153	§ 1206.152 or § 1206.153.
§ 1206.156(a)	MMS	ONRR.
§ 1206.156(b)	§ 206.157	§ 1206.157.
§ 1206.156(c)(1) (two times)	§ 206.152	§ 1206.152.
§ 1206.156(c)(2) (two times)	§ 206.153	§ 1206.153.
§ 1206.156(c)(3) (two times)	MMS	ONRR.
§ 1206.156(d) (two times)	MMS	ONRR.
§ 1206.156(d)	30 CFR 218.54	§ 1218.54 of this chapter.
§ 1206.156(d)	part 241	part 1241.
§ 1206.157(a)(1)(i)	MMS'	ONRR's.
§ 1206.157(a)(1)(ii) (two times)	MMS	ONRR.
§ 1206.157(a)(1)(iii) (four times)	MMS	ONRR.
§ 1206.157(a)(2)(i)	MMS	ONRR.
§ 1206.157(a)(2)(ii) (two times)	MMS	ONRR.
§ 1206.157(a)(3) (four times)	MMS	ONRR.
§ 1206.157(a)(5) (two times)	MMS	ONRR.
§ 1206.157(b)(1)	MMS	ONRR.
§ 1206.157(b)(2)(iv) introductory text	MMS	ONRR.
§ 1206.157(b)(2)(iv)(A)	MMS	ONRR.
§ 1206.157(b)(2)(iv)(B)	MMS	ONRR.

AMENDMENT TABLE FOR PART 1206—Continued

Amend	By removing the reference to:	And adding in its place:
§ 1206.157(b)(3)(i)	MMS	ONRR.
§ 1206.157(b)(3)(ii) (two times)	MMS	ONRR.
§ 1206.157(b)(4) (four times)	MMS	ONRR.
§ 1206.157(b)(5)(i) introductory text	The MMS	ONRR.
§ 1206.157(b)(5)(ii)	MMS	ONRR.
§ 1206.157(c)(1)(i)	MMS	ONRR.
§ 1206.157(c)(1)(ii)	The MMS	ONRR.
§ 1206.157(c)(1)(ii)	part 207	part 1207.
§ 1206.157(c)(2)(i)	MMS	ONRR.
§ 1206.157(c)(2)(iii)	The MMS	ONRR.
§ 1206.157(c)(2)(iii)	part 207	part 1207.
§ 1206.157(d)(1) (two times)	MMS	ONRR.
§ 1206.157(d)(1)	§ 206.156	§ 1206.156.
§ 1206.157(d)(3)	30 CFR 218.54	§ 1218.54 of this chapter.
§ 1206.157(e)(1)	30 CFR 218.54	§ 1218.54 of this chapter.
§ 1206.157(e)(1)	MMS	ONRR.
§ 1206.157(e)(2)	MMS	ONRR.
§ 1206.157(e)(3) (two times)	MMS	ONRR.
§ 1206.157(f)(9)	MMS	ONRR.
§ 1206.157(f)(9)	§§ 206.152(i) and 206.153(i)	§§ 1206.152(i) and 1206.153(i).
§ 1206.158(a)	§ 206.153	§ 1206.153.
§ 1206.158(c)(1)	MMS	ONRR.
§ 1206.158(c)(2)	§ 206.153	§ 1206.153.
§ 1206.158(c)(2)	§ 206.156	§ 1206.156.
§ 1206.158(c)(3) (two times)	MMS	ONRR.
§ 1206.158(d)(1)	MMS	ONRR.
§ 1206.158(d)(2)(i)	MMS	ONRR.
§ 1206.158(d)(2)(ii) (three times)	MMS	ONRR.
§ 1206.158(e) (two times)	MMS	ONRR.
§ 1206.158(e)	30 CFR 218.54	§ 1218.54 of this chapter.
§ 1206.158(e)	part 241	part 1241.
§ 1206.159(a)(1)(i)	MMS'	ONRR's.
§ 1206.159(a)(1)(ii) (two times)	MMS	ONRR.
§ 1206.159(a)(1)(iii) (four times)	MMS	ONRR.
§ 1206.159(a)(3) (four times)	MMS	ONRR.
§ 1206.159(b)(1)	MMS	ONRR.
§ 1206.159(b)(2)(iv) introductory text	MMS	ONRR.
§ 1206.159(b)(2)(iv)(A)	MMS	ONRR.
§ 1206.159(b)(2)(iv)(B)	MMS	ONRR.
§ 1206.159(b)(4) (three times)	MMS	ONRR.
§ 1206.159(c)(1)(i)	MMS	ONRR.
§ 1206.159(c)(1)(ii)	The MMS	ONRR.
§ 1206.159(c)(1)(ii)	MMS	ONRR.
§ 1206.159(c)(2)	MMS	ONRR.
§ 1206.159(c)(2)(iii) (two times)	MMS	ONRR.
§ 1206.159(d)(1) (two times)	MMS	ONRR.
§ 1206.159(d)(1)	§ 206.158	§ 1206.158.
§ 1206.159(d)(3)	30 CFR 218.54	§ 1218.54 of this chapter.
§ 1206.159(e)(1)	30 CFR 218.54	§ 1218.54 of this chapter.
§ 1206.159(e)(1)	MMS	ONRR.
§ 1206.159(e)(2)	MMS	ONRR.
§ 1206.159(e)(3) (two times)	MMS	ONRR.
§ 1206.170(c) (two times)	MMS	ONRR.
§ 1206.170(d)	MMS	ONRR.
§ 1206.171 introductory text	part 202	part 1202.
§ 1206.171, definition of *Active spot market*	MMS-acceptable	ONRR-acceptable.
§ 1206.171, definition of *Arm's-length contract,* paragraph (3) (two times).	MMS	ONRR.
§ 1206.171, definition of *Index*	MMS-established	ONRR-established.
§ 1206.171, definition of *Index zone*	MMS	ONRR.
§ 1206.171, definition of *Index zone*	§ 206.172(d)(2)	§ 1206.172(d)(2).
§ 1206.171, definition of *MMS*	MMS	ONRR.
§ 1206.171, definition of *MMS*	Minerals Management Service	Office of Natural Resources Revenue.
§ 1206.171, definition of *MMS*	MMS	ONRR.
§ 1206.172(a) introductory text	§ 206.174	§ 1206.174.
§ 1206.172(a)(2)	§ 206.174	§ 1206.174.
§ 1206.172(b)(2)	§ 206.172(e)(4)(i)	§ 1206.172(e)(4)(i).
§ 1206.172(b)(2)	§ 206.176	§ 1206.176.
§ 1206.172(b)(2)	§ 206.176 or § 206.174	§ 1206.176 or § 1206.174.
§ 1206.172(b)(3)	§ 206.174(b)	§ 1206.174(b).
§ 1206.172(c)(2) introductory text	§ 206.173	§ 1206.173.
§ 1206.172(c)(2)(ii)	§ 206.174	§ 1206.174.

AMENDMENT TABLE FOR PART 1206—Continued

Amend	By removing the reference to:	And adding in its place:
§ 1206.172(d)(1)(i)	MMS-approved	ONRR-approved.
§ 1206.172(d)(2) introductory text (three times)	MMS	ONRR.
§ 1206.172(d)(2)(i)	MMS-approved	ONRR-approved.
§ 1206.172(d)(2)(v)	MMS's	ONRR's.
§ 1206.172(d)(3) (two times)	MMS	ONRR.
§ 1206.172(d)(4) introductory text	MMS	ONRR.
§ 1206.172(d)(5)	MMS	ONRR.
§ 1206.172(d)(6) (three times)	MMS	ONRR.
§ 1206.172(d)(6)	MMS-approved	ONRR-approved.
§ 1206.172(d)(7)	MMS	ONRR.
§ 1206.172(d)(8)	§§ 206.177, 206.178, 206.179, and 206.180	§§ 1206.177, 1206.178, 1206.179, and 1206.180.
§ 1206.172(e)(6)(i)	MMS	ONRR.
§ 1206.172(e)(6)(iii) (two times)	MMS	ONRR.
§ 1206.172(f)(1) introductory text (two times)	MMS	ONRR.
§ 1206.172(f)(1)(i) (two times)	MMS	ONRR.
§ 1206.172(f)(1)(i)	§ 206.174	§ 1206.174.
§ 1206.172(f)(1)(ii)	MMS	ONRR.
§ 1206.172(f)(2) introductory text (two times)	MMS	ONRR.
§ 1206.172(f)(2)(i) (two times)	MMS	ONRR.
§ 1206.172(f)(2)(i)	§ 206.172	§ 1206.172.
§ 1206.172(f)(3)	MMS	ONRR.
§ 1206.172(g)(1)(i) (two times)	MMS	ONRR.
§ 1206.172(g)(1)(ii) (two times)	MMS	ONRR.
§ 1206.172(g)(1)(ii)	§ 206.174	§ 1206.174.
§ 1206.172(g)(1)(iii)	MMS	ONRR.
§ 1206.172(g)(2)(i) (two times)	MMS	ONRR.
§ 1206.172(g)(2)(ii) (two times)	MMS	ONRR.
§ 1206.172(g)(2)(ii)	§ 206.172	§ 1206.172.
§ 1206.173(a)(1)	§ 206.176	§ 1206.176.
§ 1206.173(a)(1)	§ 206.176(a)	§ 1206.176(a).
§ 1206.173(a)(2) introductory text	MMS-designated	ONRR-designated.
§ 1206.173(a)(2)(i) introductory text	MMS	ONRR.
§ 1206.173(a)(2)(i) introductory text	MMS-designated	ONRR-designated.
§ 1206.173(a)(2)(i)(H)	MMS-designated	ONRR-designated.
§ 1206.173(a)(2)(i)(Q) (two times)	MMS	ONRR.
§ 1206.173(a)(2)(ii) (two times)	MMS	ONRR.
§ 1206.173(b)(1)	§ 206.172 or § 206.174	§ 1206.172 or § 1206.174.
§ 1206.173(b)(2) introductory text	§ 206.172 or § 206.174	§ 1206.172 or § 1206.174.
§ 1206.173(b)(2)(i)	§ 206.172 or § 206.174	§ 1206.172 or § 1206.174.
§ 1206.174(a)(1)(i)	MMS	ONRR.
§ 1206.174(a)(1)(ii)	§ 206.174(b)	§ 1206.174(b).
§ 1206.174(a)(1)(ii)	§ 206.172	§ 1206.172.
§ 1206.174(a)(1)(iii)	§ 206.172	§ 1206.172.
§ 1206.174(a)(3)	§ 206.176	§ 1206.176.
§ 1206.174(a)(4)(ii) (three times)	MMS	ONRR.
§ 1206.174(a)(4)(ii)	30 CFR 218.54	§ 1218.54 of this chapter.
§ 1206.174(a)(4)(ii)	MMS	ONRR.
§ 1206.174(a)(4)(iii)	§ 206.173	§ 1206.173.
§ 1206.174(a)(4)(iii) (three times)	MMS	ONRR.
§ 1206.174(a)(4)(iv) (four times)	MMS	ONRR.
§ 1206.174(b)(1)(ii) (two times)	MMS	ONRR.
§ 1206.174(b)(1)(iii) (three times)	MMS	ONRR.
§ 1206.174(b)(1)(iv)	MMS	ONRR.
§ 1206.174(b)(2)	MMS	ONRR.
§ 1206.174(d)(1)	MMS	ONRR.
§ 1206.174(d)(2)	MMS	ONRR.
§ 1206.174(e) (three times)	MMS	ONRR.
§ 1206.174(e)	30 CFR 218.54	§ 1218.54 of this chapter.
§ 1206.174(f) (four times)	MMS	ONRR.
§ 1206.174(g)(2) introductory text	§ 206.173	§ 1206.173.
§ 1206.174(j) (two times)	MMS	ONRR.
§ 1206.174(k)	MMS	ONRR.
§ 1206.175(d)(4) (two times)	MMS	ONRR.
§ 1206.176(a)(1)(i)	§ 206.172 or § 206.174	§ 1206.172 or § 1206.174.
§ 1206.176(a)(1)(ii)	§ 206.52	§ 1206.52.
§ 1206.176(a)(2)	§ 206.172 or § 206.174	§ 1206.172 or § 1206.174.
§ 1206.176(b)	§ 206.173	§ 1206.173.
§ 1206.176(c)	MMS	ONRR.
§ 1206.176(d)	§ 206.173	§ 1206.173.
§ 1206.176(e)	§ 206.173(b)(4)(ii)	§ 1206.173(b)(4)(ii).
§ 1206.177(a)	§ 206.174	§ 1206.174.

AMENDMENT TABLE FOR PART 1206—Continued

Amend	By removing the reference to:	And adding in its place:
§ 1206.177(b)	§ 206.178	§ 1206.178.
§ 1206.177(c)(2) (two times)	MMS	ONRR.
§ 1206.177(c)(3)	MMS	ONRR.
§ 1206.177(d)	MMS	ONRR.
§ 1206.177(d)	30 CFR 218.54	§ 1218.54 of this chapter.
§ 1206.178(a)(1)(i) (two times)	MMS	ONRR.
§ 1206.178(a)(1)(ii) (two times)	MMS	ONRR.
§ 1206.178(a)(1)(iii) (three times)	MMS	ONRR.
§ 1206.178(a)(2)(i)	MMS	ONRR.
§ 1206.178(a)(2)(ii) introductory text (two times)	MMS	ONRR.
§ 1206.178(a)(3)(i) (two times)	MMS	ONRR.
§ 1206.178(a)(3)(ii) (two times)	MMS	ONRR.
§ 1206.178(a)(5) (two times)	MMS	ONRR.
§ 1206.178(b)(1)(ii) (four times)	MMS	ONRR.
§ 1206.178(b)(2)(iv) introductory text	MMS	ONRR.
§ 1206.178(b)(2)(iv)(A)	MMS	ONRR.
§ 1206.178(b)(3)(i) introductory text	MMS	ONRR.
§ 1206.178(b)(3)(ii) introductory text (two times)	MMS	ONRR.
§ 1206.178(b)(4)	MMS	ONRR.
§ 1206.178(b)(5) (four times)	MMS	ONRR.
§ 1206.178(d)(1) (two times)	MMS	ONRR.
§ 1206.178(d)(2)	MMS	ONRR.
§ 1206.178(e)	30 CFR 218.54	§ 1218.54 of this chapter.
§ 1206.178(f)(9)	MMS	ONRR.
§ 1206.178(f)(9)	§ 206.174(h)	§ 1206.174(h).
§ 1206.179(a)	§ 206.174	§ 1206.174.
§ 1206.179(c)	§ 206.174	§ 1206.174.
§ 1206.179(c)	§ 206.177	§ 1206.177.
§ 1206.179(d)	MMS	ONRR.
§ 1206.179(e)	part 206	part 1206.
§ 1206.179(g)	MMS	ONRR.
§ 1206.179(g)	30 CFR 218.54	§ 1218.54 of this chapter.
§ 1206.180(a)(1)(i) (two times)	MMS	ONRR.
§ 1206.180(a)(1)(ii) (two times)	MMS	ONRR.
§ 1206.180(a)(1)(iii) (three times)	MMS	ONRR.
§ 1206.180(a)(3) (four times)	MMS	ONRR.
§ 1206.180(b)(1)(ii) (four times)	MMS	ONRR.
§ 1206.180(b)(2)(iv) introductory text	MMS	ONRR.
§ 1206.180(b)(2)(iv)(A) (two times)	MMS	ONRR.
§ 1206.180(b)(3)	MMS	ONRR.
§ 1206.180(c)(1) (two times)	MMS	ONRR.
§ 1206.180(c)(2)	MMS	ONRR.
§ 1206.180(d)	30 CFR 218.54	§ 1218.54 of this chapter.
§ 1206.181 introductory text	§ 206.176	§ 1206.176.
§ 1206.181(c) (five times)	MMS	ONRR.
§ 1206.181(c)	part 290	part 1290.
§ 1206.181(d)	§§ 206.179 and 206.180	§§ 1206.179 and 1206.180.
§ 1206.250(c)	Minerals Management Service	Office of Natural Resources Revenue.
§ 1206.250(c)	(MMS)	(ONRR).
§ 1206.251, definition of *Arm's-length contract,* paragraph (c) (two times).	MMS	ONRR.
§ 1206.252	30 CFR 210	part 1210.
§ 1206.255(a)	MMS	ONRR.
§ 1206.255(b)	MMS	ONRR.
§ 1206.255(c)	§ 206.256(d)	§ 1206.256(d).
§ 1206.256(d)	§§ 206.257	§§ 1206.257.
§ 1206.257(a)	§§ 206.258 through 206.262	§§ 1206.258 through 1206.262.
§ 1206.257(a)	§ 206.265	§ 1206.265.
§ 1206.257(b)(2) (two times)	MMS	ONRR.
§ 1206.257(b)(3)	The MMS	ONRR.
§ 1206.257(b)(3) (three times)	MMS	ONRR.
§ 1206.257(b)(4)	The MMS	ONRR.
§ 1206.257(b)(5)	MMS's	ONRR's.
§ 1206.257(d)(1)	MMS's	ONRR's.
§ 1206.257(d)(1)	MMS	ONRR.
§ 1206.257(d)(2)	MMS	ONRR.
§ 1206.257(d)(3)	MMS	ONRR.
§ 1206.257(d)(3)	Associate Director	Director.
§ 1206.257(d)(3)	Minerals Revenue Management	Office of Natural Resources Revenue.
§ 1206.257(e) (three times)	MMS	ONRR.
§ 1206.257(e)	30 CFR 218.202	§ 1218.202 of this chapter.
§ 1206.257(f) (six times)	MMS	ONRR.

AMENDMENT TABLE FOR PART 1206—Continued

Amend	By removing the reference to:	And adding in its place:
§ 1206.257(g)	§§ 206.258 through 206.262 and § 206.265	§§ 1206.258 through 1206.262 and § 1206.65.
§ 1206.257(i)	MMS	ONRR.
§ 1206.257(j)	MMS	ONRR.
§ 1206.257(k)	MMS	ONRR.
§ 1206.257(k)	§ 206.265	§ 1206.265.
§ 1206.258(a) (two times)	§ 206.257	§ 1206.257.
§ 1206.258(a)	MMS	ONRR.
§ 1206.258(b)	MMS	ONRR.
§ 1206.258(b)	30 CFR 218.202	§ 1218.202 of this chapter.
§ 1206.259(a)(1)	MMS's	ONRR's.
§ 1206.259(a)(2) (two times)	MMS	ONRR.
§ 1206.259(a)(3)	The MMS	ONRR.
§ 1206.259(a)(3) (three times)	MMS	ONRR.
§ 1206.259(b)(1)	MMS	ONRR.
§ 1206.259(b)(2)(iv) introductory text	MMS	ONRR.
§ 1206.259(b)(2)(iv)(A)	MMS	ONRR.
§ 1206.259(b)(2)(iv)(B)	The MMS	ONRR.
§ 1206.259(c)(1)(i)	MMS	ONRR.
§ 1206.259(c)(1)(ii)	The MMS	ONRR.
§ 1206.259(c)(1)(ii)	MMS	ONRR.
§ 1206.259(c)(2)(i)	MMS	ONRR.
§ 1206.259(c)(2)(iii) (two times)	MMS	ONRR.
§ 1206.259(d)(3)	30 CFR 218.202	§ 1218.202 of this chapter.
§ 1206.259(e)(1)	30 CFR 218.202	§ 1218.202 of this chapter.
§ 1206.261(a) introductory text	§ 206.257	§ 1206.257.
§ 1206.261(a) introductory text	MMS	ONRR.
§ 1206.261(d)	MMS	ONRR.
§ 1206.261(d)	30 CFR 218.202	§ 1218.202 of this chapter.
§ 1206.262(a)(2) (two times)	MMS	ONRR.
§ 1206.262(a)(3)	The MMS	ONRR.
§ 1206.262(a)(3) (three times)	MMS	ONRR.
§ 1206.262(b)(1)	MMS	ONRR.
§ 1206.262(b)(2)(iv) introductory text	The MMS	ONRR.
§ 1206.262(b)(2)(iv)(A)	MMS	ONRR.
§ 1206.262(b)(2)(iv)(B)	The MMS	ONRR.
§ 1206.262(b)(3) introductory text (four times)	MMS	ONRR.
§ 1206.262(b)(3)(i)	MMS	ONRR.
§ 1206.262(c)(1)(i)	MMS	ONRR.
§ 1206.262(c)(1)(ii)	The MMS	ONRR.
§ 1206.262(c)(1)(ii)	MMS	ONRR.
§ 1206.262(c)(2)(i)	MMS	ONRR.
§ 1206.262(c)(2)(iii) (two times)	MMS	ONRR.
§ 1206.262(d)(3)	30 CFR 218.202	§ 1218.202 of this chapter.
§ 1206.262(e)(1)	30 CFR 218.202	§ 1218.202 of this chapter.
§ 1206.262(e)(1)	MMS	ONRR.
§ 1206.262(e)(2)	MMS	ONRR.
§ 1206.264 (three times)	MMS	ONRR.
§ 1206.265 introductory text	§ 206.257(h)	§ 1206.257(h).
§ 1206.265 introductory text	MMS	ONRR.
§ 1206.265(a)	§ 206.257(c)(2)(i–iv)	§ 1206.257(c)(2)(i)–(iv).
§ 1206.265(b)	§ 206.257(c)(2)(v)	§ 1206.257(c)(2)(v).
§ 1206.265(b)	MMS-approved	ONRR-approved.
§ 1206.265(b)	§ 206.259(b)(2)(v)	§ 1206.259(b)(2)(v).
§ 1206.350(b)	MMS	ONRR.
§ 1206.350(c)(2) introductory text	MMS	ONRR.
§ 1206.350(c)(2) introductory text	Land and Minerals Management	Policy, Management and Budget.
§ 1206.350(c)(2)(i)	MMS	ONRR.
§ 1206.350(c)(2)(ii)	§ 206.364	§ 1206.364.
§ 1206.351, definition of *Affiliate,* paragraph (1)	MMS	ONRR.
§ 1206.351, definition of *Affiliate,* paragraph (2)	MMS	ONRR.
§ 1206.352(a)(2)	§ 206.361	§ 1206.361.
§ 1206.352(b)(1)(i)	§ 206.353 and § 206.354	§ 1206.353 and § 1206.354.
§ 1206.352(b)(1)(i)	§ 206.361	§ 1206.361.
§ 1206.352(b)(1)(ii)	MMS	ONRR.
§ 1206.352(b)(1)(ii)	§ 206.364	§ 1206.364.
§ 1206.352(b)(2)	§ 206.361	§ 1206.361.
§ 1206.353(a) introductory text	§ 206.352(b)(1)(i)	§ 1206.352(b)(1)(i).
§ 1206.353(b)(1)(ii)	§ 206.354(b)(1)	§ 1206.354(b)(1).
§ 1206.353(b)(1)(ii)	MMS	ONRR.
§ 1206.353(g)	MMS	ONRR.
§ 1206.353(h)(1)	MMS	ONRR.
§ 1206.353(m)(2)	§ 218.302	§ 1218.302 of this chapter.

AMENDMENT TABLE FOR PART 1206—Continued

Amend	By removing the reference to:	And adding in its place:
§ 1206.353(n) (two times)	MMS	ONRR.
§ 1206.353(n)	part 212	part 1212.
§ 1206.354(a)	§ 206.352(b)(1)(i)	§ 1206.352(b)(1)(i).
§ 1206.354(b)(1)(ii)	§ 206.353(b)(1)	§ 1206.363(b)(1).
§ 1206.354(b)(1)(ii)	MMS	ONRR.
§ 1206.354(g)	MMS	ONRR.
§ 1206.354(h)(1)	MMS	ONRR.
§ 1206.354(m)(2)	§ 218.302	§ 1218.302 of this chapter.
§ 1206.354(n) (two times)	MMS	ONRR.
§ 1206.354(n)	part 212	part 1212.
§ 1206.355	§ 206.361	§ 1206.361.
§ 1206.356(a)(2)	MMS	ONRR.
§ 1206.356(a)(3)	MMS	ONRR.
§ 1206.356(a)(3)	Land and Minerals Management	Policy, Management and Budget.
§ 1206.356(a)(3)	§ 206.364	§ 1206.364.
§ 1206.356(b)(1)(iii)	The MMS	ONRR.
§ 1206.356(b)(3) introductory text	MMS	ONRR.
§ 1206.356(b)(3)(i)	§ 218.302	§ 1218.302 of this chapter.
§ 1206.356(b)(3)(ii)	MMS	ONRR.
§ 1206.356(c)	MMS	ONRR.
§ 1206.357(b)(1)	§§ 206.358 and 206.359	§§ 1206.358 and 1206.359.
§ 1206.357(b)(1)	§ 206.361	§ 1206.361.
§ 1206.357(b)(3)	MMS	ONRR.
§ 1206.358(d)(1)	MMS	ONRR.
§ 1206.358(d)(2) (two times)	MMS	ONRR.
§ 1206.358(d)(2)	part 212	part 1212.
§ 1206.358(e)	MMS	ONRR.
§ 1206.358(e)	§ 218.302	§ 1218.302 of this chapter.
§ 1206.359(a)(1) (two times)	MMS	ONRR.
§ 1206.359(a)(2) (four times)	MMS	ONRR.
§ 1206.359(g)	MMS	ONRR.
§ 1206.359(h)(1)	MMS	ONRR.
§ 1206.359(l)(2)	§ 218.302	§ 1218.302 of this chapter.
§ 1206.360 introductory text	part 212	part 1212.
§ 1206.360(b) (two times)	MMS	ONRR.
§ 1206.361(section heading)	MMS	ONRR.
§ 1206.361(a)(1) (two times)	MMS	ONRR.
§ 1206.361(a)(2)	MMS	ONRR.
§ 1206.361(a)(2)	§ 218.302	§ 1218.302 of this chapter.
§ 1206.361(b) (four times)	MMS	ONRR.
§ 1206.361(b)	The MMS	ONRR.
§ 1206.361(d)	The MMS	ONRR.
§ 1206.363 (section heading)	MMS	ONRR.
§ 1206.363 (two times)	MMS	ONRR.
§ 1206.364(a) introductory text	MMS	ONRR.
§ 1206.364(a)(3)	MMS	ONRR.
§ 1206.364(b)(1)	Land and Minerals Management	Policy, Management and Budget.
§ 1206.364(b)(2)	The MMS	ONRR.
§ 1206.364(b)(3)	The MMS	ONRR.
§ 1206.364(b)(3) (two times)	MMS	ONRR.
§ 1206.364(c)(1)	Land and Minerals Management	Policy, Management and Budget.
§ 1206.364(c)(1)	MMS	ONRR.
§ 1206.364(c)(2)	§ 218.302	§ 1218.302 of this chapter.
§ 1206.364(d) introductory text (two times)	MMS	ONRR.
§ 1206.364(d) introductory text	The MMS	ONRR.
§ 1206.364(d) introductory text	MMS-issued	ONRR-issued.
§ 1206.364(d)(1)	MMS	ONRR.
§ 1206.364(d)(1)	part 290	part 1290.
§ 1206.364(d)(2)	part 290	part 1290.
§ 1206.364(e)	MMS	ONRR.
§ 1206.364(f)	The MMS	ONRR.
§ 1206.364(g) introductory text	The MMS	ONRR.
§ 1206.364(h)	The MMS	ONRR.
§ 1206.364(h)	§ 206.365	§ 1206.365.
§ 1206.365 (section heading)	MMS	ONRR.
§ 1206.365 (two times)	MMS	ONRR.
§ 1206.366	The MMS	ONRR.
§ 1206.451, definition of *Allowance* (three times).	MMS-initially	ONRR-initially.
§ 1206.451, definition of *Arm's length contract* (two times).	MMS	ONRR.
§ 1206.451, definition of MMS	MMS	ONRR.

AMENDMENT TABLE FOR PART 1206—Continued

Amend	By removing the reference to:	And adding in its place:
§ 1206.451, definition of MMS	Minerals Management Service	Office of Natural Resources Revenue.
§ 1206.453	part 210	part 1210.
§ 1206.454(a)	MMS	ONRR.
§ 1206.454(b)	MMS	ONRR.
§ 1206.454(c)	§ 206.455(d)	§ 1206.455(d).
§ 1206.455(d)	§ 206.456	§ 1206.456.
§ 1206.456(a)	§§ 206.457 through 206.461	§§ 1206.457 through 1206.461.
§ 1206.456(a)	§ 206.464	§ 1206.464.
§ 1206.456(b)(2) (two times)	MMS	ONRR.
§ 1206.456(b)(3) (four times)	MMS	ONRR.
§ 1206.456(b)(4)	MMS	ONRR.
§ 1206.456(b)(5)	MMS'	ONRR.
§ 1206.456(d)(1)	MMS'	ONRR.
§ 1206.456(d)(1)	MMS	ONRR.
§ 1206.456(d)(2)	MMS	ONRR.
§ 1206.456(d)(3)	MMS	ONRR.
§ 1206.456(d)(3)	Associate Director	Director.
§ 1206.456(d)(3)	Minerals Revenue Management	Office of Natural Resources Revenue.
§ 1206.456(e) (three times)	MMS	ONRR.
§ 1206.456(f) (six times)	MMS	ONRR.
§ 1206.456(g)	§§ 206.457 through 206.461 and § 206.464	§§ 1206.457 through 1206.461 and § 1206.464.
§ 1206.456(i)	MMS	ONRR.
§ 1206.456(j)	MMS	ONRR.
§ 1206.456(k)	§§ 206.457 through 206.461 and § 206.464	§§ 1206.457 through 1206.461 and § 1206.464.
§ 1206.456(k) (two times)	MMS	ONRR.
§ 1206.457(a) (two times)	§ 206.456	§ 1206.456.
§ 1206.457(a)	MMS	ONRR.
§ 1206.457(b)	MMS	ONRR.
§ 1206.457(b)	30 CFR 218.202	§ 1218.202 of this chapter.
§ 1206.458(a)(1)	MMS'	ONRR.
§ 1206.458(a)(1) (two times)	MMS	ONRR.
§ 1206.458(a)(2) (two times)	MMS	ONRR.
§ 1206.458(a)(3) (four times)	MMS	ONRR.
§ 1206.458(b)(1) (five times)	MMS	ONRR.
§ 1206.458(b)(2)(iv) introductory text	MMS	ONRR.
§ 1206.458(b)(2)(iv)(A)	MMS	ONRR.
§ 1206.458(b)(2)(iv)(B)	MMS	ONRR.
§ 1206.458(c)(1)(iii)	MMS	ONRR.
§ 1206.458(c)(1)(iv) (two times)	MMS	ONRR.
§ 1206.458(c)(1)(v)	MMS	ONRR.
§ 1206.458(c)(1)(vi)	MMS	ONRR.
§ 1206.458(c)(2)(iii) (two times)	MMS	ONRR.
§ 1206.458(c)(2)(v)	MMS	ONRR.
§ 1206.458(c)(2)(vi) (two times)	MMS	ONRR.
§ 1206.458(c)(2)(vii)	MMS	ONRR.
§ 1206.458(c)(3)	MMS	ONRR.
§ 1206.458(c)(4)	MMS	ONRR.
§ 1206.458(d)(3)	30 CFR 218.202	§ 1218.202 of this chapter.
§ 1206.458(e)(1)	30 CFR 218.202	§ 1218.202.
§ 1206.458(e)(2)	MMS	ONRR.
§ 1206.460(a) introductory text	§ 206.456	§ 1206.456.
§ 1206.460(a) introductory text	MMS	ONRR.
§ 1206.460(d)	MMS	ONRR.
§ 1206.460(d)	30 CFR 218.202	§ 1218.202 of this chapter.
§ 1206.461(a)(1)	MMS'	ONRR's.
§ 1206.461(a)(1) (two times)	MMS	ONRR.
§ 1206.461(a)(2) (two times)	MMS	ONRR.
§ 1206.461(a)(3) (four times)	MMS	ONRR.
§ 1206.461(b)(1) (five times)	MMS	ONRR.
§ 1206.461(b)(2)(iv) introductory text	MMS	ONRR.
§ 1206.461(b)(2)(iv)(A)	MMS	ONRR.
§ 1206.461(b)(2)(iv)(B)	MMS	ONRR.
§ 1206.461(b)(3) introductory text (four times)	MMS	ONRR.
§ 1206.461(b)(3)(i)	MMS	ONRR.
§ 1206.461(c)(1)(iii)	MMS	ONRR.
§ 1206.461(c)(1)(iv) (two times)	MMS	ONRR.
§ 1206.461(c)(1)(v)	MMS	ONRR.
§ 1206.461(c)(1)(vi)	MMS	ONRR.
§ 1206.461(c)(2)(iii) (two times)	MMS	ONRR.
§ 1206.461(c)(2)(v)	MMS	ONRR.

AMENDMENT TABLE FOR PART 1206—Continued

Amend	By removing the reference to:	And adding in its place:
§ 1206.461(c)(2)(vi) (two times)	MMS	ONRR.
§ 1206.461(c)(2)(vii)	MMS	ONRR.
§ 1206.461(c)(3)	MMS	ONRR.
§ 1206.461(c)(4)	MMS	ONRR.
§ 1206.461(d)(3)	30 CFR 218.202	§ 1218.202 of this chapter.
§ 1206.461(e)(1)	30 CFR 218.202	§ 1218.202 of this chapter.
§ 1206.461(e)(2)	MMS	ONRR.
§ 1206.463 (three times)	MMS	ONRR.
§ 1206.464 introductory text	§ 206.456(h)	§ 1206.456(h).
§ 1206.464 introductory text	MMS	ONRR.
§ 1206.464(a)	§ 206.456(c)(2)(i) through (iv)	§ 1206.456(c)(2)(i) through (iv).
§ 1206.464(b)	§ 206.456(c)(2)(v)	§ 1206.456(c)(2)(v).
§ 1206.464(b)	MMS-approved	ONRR-approved.
§ 1206.464(b)	§ 206.458(b)(2)(v)	§ 1206.458(b)(2)(v).

§ 1206.171 [Amended]

■ 17A. In newly redesignated § 1206.171, place the newly redesignated definition of "ONRR" in alphabetical order.

§ 1206.451 [Amended]

■ 17B. In newly redesignated § 1206.451, place the newly redesignated definition of "ONRR" in alphabetical order

Chapter II, Subchapter A

PART 207—[REDESIGNATED AS PART 1207]

■ 18. Transfer 30 CFR part 207 from chapter II, subchapter A, to chapter XII, subchapter A, and redesignate as 30 CFR part 1207.

Chapter XII, Subchapter A

PART 1207—SALES AGREEMENTS OR CONTRACTS GOVERNING THE DISPOSAL OF LEASE PRODUCTS

■ 19. The authority citation for the newly redesignated 30 CFR part 1207 continues to read as follows:

Authority: 5 U.S.C. 301 *et seq.;* 25 U.S.C. 396 *et seq.;* 25 U.S.C. 396a *et seq.;* 25 U.S.C. 2101 *et seq.;* 30 U.S.C. 181 *et seq.;* 30 U.S.C. 351 *et seq.;* 30 U.S.C. 1001 *et seq.;* 30 U.S.C. 1701 *et seq.;* 31 U.S.C. 3716 *et seq.;* 31 U.S.C. 9701; 43 U.S.C. 1301 *et seq.;* 43 U.S.C. 1331 *et seq.;* and 43 U.S.C. 1801 *et seq.*

■ 20. Amend the newly redesignated part 1207 as follows:

AMENDMENT TABLE FOR PART 1207

Amend	By removing the reference to:	And adding in its place:
§ 1207.1(b)	Minerals Management Service	Bureau of Ocean Energy Management, Regulation, and Enforcement.
§ 1207.2	part 206	part 1206.
§ 1207.3	§ 207.5	§ 1207.5.
§ 1207.4(a)	Minerals Management Service	Bureau of Ocean Energy Management, Regulation, and Enforcement (BOEMRE).
§ 1207.5	MMS, State or Indian representatives, other MMS or BLM officials.	Office of Natural Resources Revenue (ONRR), State or Indian representatives, BOEMRE or BLM officials.
§ 1207.5 (2 times)	MMS	ONRR.
§ 1207.5	part 212	part 1212.

Chapter II, Subchapter A

PART 208—[REDESIGNATED AS PART 1208]

■ 21. Transfer 30 CFR part 208 from chapter II, subchapter A, to chapter XII, subchapter A, and redesignate as 30 CFR part 1208.

Chapter XII, Subchapter A

PART 1208—SALE OF FEDERAL ROYALTY OIL

■ 22. The authority citation for the newly redesignated 30 CFR part 1208 continues to read as follows:

Authority: 5 U.S.C. 301 *et seq.;* 30 U.S.C. 181 *et seq.,* 351 *et seq.,* 1701 *et seq.;* 31 U.S.C. 9701; 41 U.S.C. 601 *et seq.;* 43 U.S.C. 1301 *et seq.,* 1331 *et seq.,* and 1801 *et seq.*

■ 23. Amend the newly redesignated part 1208 as follows:

AMENDMENT TABLE FOR PART 1208

Amend	By removing the reference to:	And adding in its place:
§ 1208.2, definition of *Area or Region*	MMS	ONRR.
§ 1208.2, definition of *Contracting officer's decision.*	MMS	ONRR.

AMENDMENT TABLE FOR PART 1208—Continued

Amend	By removing the reference to:	And adding in its place:
§ 1208.2, definition of *Delivery point*	§ 208.8(a)	§ 208.8(a).
§ 1208.2, definition of *Director*	MMS	ONRR.
§ 1208.2, definition of *MMS*	MMS	ONRR.
§ 1208.2, definition of *MMS*	Minerals Management Service	Office of Natural Resources Revenue.
§ 1208.2, definition of *Preference eligible refiner*	§ 208.7(g)	§ 208.7(g).
§ 1208.2, definition of *Reallocation*	MMS	ONRR.
§ 1208.4(a)	30 CFR 208.5	§ 1208.5.
§ 1208.4(b)(1)	MMS	ONRR.
§ 1208.4(b)(2)	part 206	part 1206.
§ 1208.4(c)	MMS	ONRR.
§ 1208.4(d) (2 times)	MMS	ONRR.
§ 1208.5(2 times)	MMS	ONRR.
§ 1208.5	30 CFR 208.2 and 208.7	§ 1208.2 and § 1208.7.
§ 1208.6(a) (3 times)	MMS	ONRR.
§ 1208.6(b)(5)	§ 208.2	§ 1208.2.
§ 1208.7(a) (2 times)	MMS	ONRR.
§ 1208.7(b)	MMS	ONRR.
§ 1208.7(c)	MMS	ONRR.
§ 1208.7(e)	MMS	ONRR.
§ 1208.7(g) (2 times)	MMS	ONRR.
§ 1208.7(h) (2 times)	MMS	ONRR.
§ 1208.8(a)	MMS	ONRR.
§ 1208.8(b) (4 times)	MMS	ONRR.
§ 1208.8(b)	part 206	part 1206.
§ 1208.8(c)	MMS	ONRR.
§ 1208.9(a)	MMS	ONRR.
§ 1208.10(a)	MMS	ONRR.
§ 1208.10(b)	MMS	ONRR.
§ 1208.10(c)	MMS	ONRR.
§ 1208.10(d) (2 times)	MMS	ONRR.
§ 1208.10(e) (4 times)	MMS	ONRR.
§ 1208.10(e)	§ 208.2	§ 1208.2.
§ 1208.11(a)	MMS-specified	ONRR-specified.
§ 1208.11(a)	MMS	ONRR.
§ 1208.11(b) (3 times)	MMS	ONRR.
§ 1208.11(c) (3 times)	MMS-specified	ONRR-specified.
§ 1208.11(d)	MMS-specified	ONRR-specified.
§ 1208.11(d) (4 times)	MMS	ONRR.
§ 1208.11(e) (2 times)	MMS	ONRR.
§ 1208.12(a) (3 times)	MMS	ONRR.
§ 1208.12(a)	30 CFR 218.51	§ 1218.51 of this chapter.
§ 1208.12(a)	§ 208.13	§ 1208.13.
§ 1208.12(a)	30 CFR 218.51	§ 1218.51 of this chapter.
§ 1208.12(b)(1)	MMS	ONRR.
§ 1208.12(b)(2)	MMS	ONRR.
§ 1208.12(b)(2)	30 CFR 218.54	§ 1218.54 of this chapter.
§ 1208.12(c) (2 times)	MMS	ONRR.
§ 1208.12(c)	MMS-specified	ONRR-specified.
§ 1208.12(c)	§ 208.11	§ 1208.11.
§ 1208.12(d) (2 times)	MMS	ONRR.
§ 1208.12(d)	MMS-specified	ONRR-specified.
§ 1208.12(d)	part 243	part 1243.
§ 1208.13	MMS	ONRR.
§ 1208.13	30 CFR 210.52	§ 1210.52 of this chapter.
§ 1208.15	MMS	ONRR.

§ 1208.2 [Amended]

■ 23A. In newly redesignated § 1208.2, place the newly redesignated definition of "ONRR" in alphabetical order.

Chapter II, Subchapter A

PART 210—[REDESIGNATED AS PART 1210]

■ 24. Transfer 30 CFR part 210 from chapter II, subchapter A, to chapter XII, subchapter A, and redesignate as 30 CFR part 1210.

Chapter XII, Subchapter A

PART 1210—FORMS AND REPORTS

■ 25. The authority citation for the newly redesignated 30 CFR part 1210 continues to read as follows:

Authority: 5 U.S.C. 301 *et seq.;* 25 U.S.C. 396, 2107; 30 U.S.C. 189, 190, 359, 1023, 1751(a); 31 U.S.C. 3716, 9701; 43 U.S.C. 1334, 1801 *et seq.;* and 44 U.S.C. 3506(a).

■ 26. Amend the newly redesignated part 1210 as follows:

AMENDMENT TABLE FOR PART 1210

Amend	By removing the reference to:	And adding in its place:
§ 1210.01	Minerals Management Service (MMS), Minerals Revenue Management (MRM).	Office of Natural Resources Revenue (ONRR).
§ 1210.01	MMS	ONRR.
§ 1210.02	MMS	ONRR.
§ 1210.10 introductory text (two times)	MMS	ONRR.
§ 1210.10 introductory text	www.mrm.mms.gov	www.mrm.boemre.gov.
§ 1210.10, Left table column for "1010–0073"	Part 220	Part 1220.
§ 1210.10, Left table column for "1010–0087"	Parts 227, 228, and 229	Parts 1227, 1228, and 1229.
§ 1210.10, Left table column for "1010–0090"	Part 216	Part 1216.
§ 1210.10, Left table column for "1010–0103"	Parts 202 and 206	Parts 1202 and 1206.
§ 1210.10, Left table column for "1010–0107"	Part 218	Part 1218.
§ 1210.10, Left table column for "1010–0119"	Part 208	Part 1208.
§ 1210.10, Left table column for "1010–0120"	Parts 202, 206, 210, 212, 217, and 218	Parts 1202, 1206, 1210, 1212, 1217, and 1218.
§ 1210.10, Left table column for "1010–0122"	Part 243	Part 1243.
§ 1210.10, Left table column for "1010–0136"	Parts 202 and 206	Parts 1202 and 1206.
§ 1210.10, Left table column for "1010–0139"	Parts 210 and 216	Parts 1210 and 1216.
§ 1210.10, Left table column for "1010–0140"	Part 210	Part 1210.
§ 1210.10, Left table column for "1010–0155"	Part 204	Part 1204.
§ 1210.20	www.mrm.mms.gov	www.mrm.boemre.gov.
§ 1210.20	MMS	ONRR.
§ 1210.20	Minerals Management Services	Bureau of Ocean Energy Management, Regulation, and Enforcement.
§ 1210.20	Mail Stop 5438, 1849 C Street, NW, Washington, DC 20240.	381 Elden Street, Herndon, VA 20170.
§ 1210.21(a) introductory text	www.mrm.mms.gov	www.mrm.boemre.gov.
§ 1210.21(a) introductory text	§ 210.56	§ 1210.56.
§ 1210.21(a) introductory text (two times)	MMS	ONRR.
§ 1210.21(b) (two times)	MMS	ONRR.
§ 1210.21(d)	MMS	ONRR.
§ 1210.30 (two times)	MMS	ONRR.
§ 1210.30	Part 241	Part 1241.
§ 1210.40 (section heading)	MMS	ONRR.
§ 1210.40	MMS	ONRR.
§ 1210.51(a) (two times)	MMS	ONRR.
§ 1210.51(b) (three times)	MMS	ONRR.
§ 1210.51(b)	§ 210.56	§ 1210.56.
§ 1210.52 introductory text	MMS	ONRR.
§ 1210.53(a)	§ 218.50	§ 1218.50 of this chapter.
§ 1210.53(b)	§ 218.50	§ 1218.50 of this chapter.
§ 1210.54(a)	§ 210.55(a)	§ 1210.55(a).
§ 1210.54(b) introductory text	MMS	ONRR.
§ 1210.54(b)(2) (two times)	MMS	ONRR.
§ 1210.54(c) (two times)	MMS	ONRR.
§ 1210.54(c)	§ 210.56	§ 1210.56.
§ 1210.55(a) introductory text	MMS	ONRR.
§ 1210.55(a)(1)	MMS	ONRR.
§ 1210.55(b) introductory text	MMS	ONRR.
§ 1210.55(b)(1)	Minerals Management Service	Office of Natural Resources Revenue.
§ 1210.55(b)(2)	Minerals Management Service	Office of Natural Resources Revenue.
§ 1210.56(a) (two times)	MMS	ONRR.
§ 1210.56(a)	www.mrm.mms.gov	www.mrm.boemre.gov.
§ 1210.56(b)	MMS	ONRR.
§ 1210.56(c)	www.mrm.mms.gov	www.mrm.boemre.gov.
§ 1210.56(c)	MMS	ONRR.
§ 1210.101(b) (three times)	MMS	ONRR.
§ 1210.101(b)	§ 210.106	§ 1210.106.
§ 1210.102(a) introductory text	MMS	ONRR.
§ 1210.102(a)(1)(ii)	MMS	ONRR.
§ 1210.102(a)(2)(i)	MMS	ONRR.
§ 1210.103(a)	MMS	ONRR.
§ 1210.103(b)	MMS	ONRR.
§ 1210.103(b)	§ 210.105	§ 1210.105.
§ 1210.104(a) introductory text	§ 210.105	§ 1210.105.
§ 1210.104(b) introductory text	MMS	ONRR.
§ 1210.104(b)(2) (two times)	MMS	ONRR.
§ 1210.104(c) (two times)	MMS	ONRR.
§ 1210.104(c)	§ 210.106	§ 1210.106.
§ 1210.105(a) introductory text	MMS	ONRR.
§ 1210.105(a)(1)	MMS	ONRR.
§ 1210.105(b) introductory text	MMS	ONRR.
§ 1210.105(b)(1)	Minerals Management Service	Office of Natural Resources Revenue.

AMENDMENT TABLE FOR PART 1210—Continued

Amend	By removing the reference to:	And adding in its place:
§ 1210.105(b)(2)	Minerals Management Service	Office of Natural Resources Revenue.
§ 1210.106(a) (three times)	MMS	ONRR.
§ 1210.106(b)	MMS	ONRR.
§ 1210.106(c)	MMS	ONRR.
§ 1210.150	§ 210.10	§ 1210.10.
§ 1210.151(a)	Part 206	Part 1206.
§ 1210.151(a)	MMS	ONRR.
§ 1210.151(b)	MMS	ONRR.
§ 1210.151 (c)(2)	Minerals Management Service	Office of Natural Resources Revenue.
§ 1210.151(c)(3)	Minerals Management Service	Office of Natural Resources Revenue.
§ 1210.151(c)(3)	MMS	ONRR.
§ 1210.152(a) introductory text	MMS	ONRR.
§ 1210.152(a)(1)	§ 206.55	§ 1206.55.
§ 1210.152(a)(2)	§ 206.180	§ 1206.180.
§ 1210.152(a)(3)	§ 206.178	§ 1206.178.
§ 1210.152(b)	MMS	ONRR.
§ 1210.152(c)(1)	Minerals Management Service	Office of Natural Resources Revenue.
§ 1210.152(c)(2)	Minerals Management Service	Office of Natural Resources Revenue.
§ 1210.153(a) introductory text	§ 206.172	§ 1206.172.
§ 1210.153(b)	MMS	ONRR.
§ 1210.153(c)(1)	Minerals Management Service	Office of Natural Resources Revenue.
§ 1210.153(c)(2)	Minerals Management Service	Office of Natural Resources Revenue.
§ 1210.154(a)	Part 206	Part 1206.
§ 1210.154(a) (two times)	MMS	ONRR.
§ 1210.154(c)(1)	Minerals Management Service	Office of Natural Resources Revenue.
§ 1210.154(c)(2)	Minerals Management Service	Office of Natural Resources Revenue.
§ 1210.155(b) introductory text	MMS	ONRR.
§ 1210.155(b)(1)	MMS	ONRR.
§ 1210.155(b)(2)(i)	Minerals Management Service	Office of Natural Resources Revenue (ONRR).
§ 1210.155(b)(2)(ii)	Minerals Management Service	Office of Natural Resources Revenue.
§ 1210.156(a)	Part 220	Part 1220.
§ 1210.156(c)(1)	Minerals Management Service	Office of Natural Resources Revenue.
§ 1210.156(c)(2)	Minerals Management Service	Office of Natural Resources Revenue.
§ 1210.157 (section heading)	MMS	ONRR.
§ 1210.157(a) (two times)	MMS	ONRR.
§ 1210.157(a)	Minerals Revenue Management	Office of Natural Resources (MRM) Revenue.
§ 1210.157(a)	Part 243	1243.
§ 1210.157(c)(1)	Minerals Management Service	Office of Natural Resources Revenue.
§ 1210.157(c)(2)	Minerals Management Service (MMS)	Office of Natural Resources Revenue.
§ 1210.158(a)	§ 218.52	§ 1218.52 of this chapter.
§ 1210.158(b)	www.mrm.mms.gov	www.mrm.boemre.gov.
§ 1210.158(b)	MMS	ONRR.
§ 1210.158(c)(1)	Minerals Management Service	Office of Natural Resources Revenue.
§ 1210.158(c)(2)	Minerals Management Service	Office of Natural Resources Revenue.
§ 1210.201(a)(1)(iv)	MMS	ONRR.
§ 1210.201(a)(1)(iv)	§ 218.51(a)	§ 1218.51(a) of this chapter.
§ 1210.201(b)(3)	§ 218.51(a)	§ 1218.51(a) of this chapter.
§ 1210.201(b)(3)	MMS	ONRR.
§ 1210.201(c)(3) introductory text	MMS	ONRR.
§ 1210.201(c)(3)(i)	Minerals Management Service, Minerals Revenue Management.	Office of Natural Resources Revenue (ONRR).
§ 1210.201(c)(3)(ii)	Minerals Management Service, Minerals Revenue Management.	Office of Natural Resources Revenue.
§ 1210.202(c)(2) introductory text	MMS	ONRR.
§ 1210.202(c)(2)(i)	Minerals Management Service, Minerals Revenue Management.	Office of Natural Resources Revenue.
§ 1210.202(c)(2)(ii)	Minerals Management Service	Office of Natural Resources Revenue.
§ 1210.203(c)	MMS	ONRR.
§ 1210.203(c)	§ 210.202(c)(2)	§ 1210.202(c)(2).
§ 1210.204(c)(2)	§ 210.202(c)(2)	§ 1210.202(c)(2).
§ 1210.205 introductory text	MMS	ONRR.
§ 1210.205(b)	MMS	ONRR.
§ 1210.205(1)	§ 206.458	§ 1206.458.
§ 1210.205(2)	§ 206.461	§ 1206.461.
§ 1210.205(c)(1)	Minerals Management Service	Office of Natural Resources Revenue.
§ 1210.205(c)(2)	Minerals Management Service	Office of Natural Resources Revenue.
§ 1210.206 (section heading)	MMS	ONRR.
§ 1210.350	30 CFR 206.351	§ 1206.351 of this chapter.
§ 1210.351	Part 212	Part 1212.
§ 1210.351 (two times)	MMS	ONRR.
§ 1210.352 (two times)	MMS	ONRR.

AMENDMENT TABLE FOR PART 1210—Continued

Amend	By removing the reference to:	And adding in its place:
§ 1210.353	MMS	ONRR.
§ 1210.354 (two times)	MMS	ONRR.
§ 1210.354	Minerals Management Service, Minerals Revenue Management.	Office of Natural Resources Revenue.

Chapter II, Subchapter A

PART 212—[REDESIGNATED AS PART 1212]

■ 27. Transfer 30 CFR part 212 from chapter II, subchapter A, to chapter XII, subchapter A, and redesignate as 30 CFR part 1212.

Chapter XII, Subchapter A

PART 1212—RECORDS AND FILES MAINTENANCE

■ 28. The authority citation for the newly redesignated 30 CFR part 1212 continues to read as follows:

Authority: 5 U.S.C. 301 *et seq.*; 25 U.S.C. 396 *et seq.*, 396a *et seq.*, 2101 *et seq.;* 30 U.S.C. 181 *et seq.*, 351 *et seq.*, 1001 *et seq.*, 1701 *et seq.;* 31 U.S.C. 9701; 43 U.S.C. 1301 *et seq.*, 1331 *et seq.*, and 1801 *et seq.*

■ 29. Amend the newly redesignated part 1212 as follows:

AMENDMENT TABLE FOR PART 1212

Amend	By removing the reference to:	And adding in its place:
§ 1212.51(a)	Minerals Management Service (MMS)	Office of Natural Resources Revenue (ONRR).
§ 1212.200(b)	MMS	ONRR.
§ 1212.350	30 CFR 206.351	§ 1206.351.
§ 1212.351(a)	MMS	ONRR.
§ 1212.351(c)	Associate Director for Minerals Revenue Management.	Director for Office of Natural Resources Revenue.

Chapter II, Subchapter A

■ 29A. Remove reserved part 215 from subchapter A.

PART 217—[REDESIGNATED AS PART 1217]

■ 30. Transfer 30 CFR part 217 from chapter II, subchapter A, to chapter XII, subchapter A, and redesignate as 30 CFR part 1217.

Chapter XII, Subchapter A

PART 1217—AUDITS AND INSPECTIONS

■ 31. The authority citation for the newly redesignated 30 CFR part 1217 continues to read as follows:

Authority: 35 Stat. 312; 35 Stat. 781, as amended; secs. 32, 6, 26, 41 Stat. 450, 753, 1248; secs. 1, 2, 3, 44 Stat. 301, as amended; secs. 6, 3, 44 Stat. 659, 710; secs. 1, 2, 3, 44 Stat. 1057; 47 Stat. 1487; 49 Stat. 1482, 1250, 1967, 2026; 52 Stat. 347; sec. 10, 53 Stat. 1196, as amended; 56 Stat. 273; sec. 10, 61 Stat. 915; sec. 3, 63 Stat. 683; 64 Stat. 311; 25 U.S.C. 396, 396a–f, 30 U.S.C. 189, 271, 281, 293, 359. Interpret or apply secs. 5, 5, 44 Stat. 302, 1058, as amended; 58 Stat. 483–485; 5 U.S.C. 301, 16 U.S.C. 508b, 30 U.S.C. 189, 192c, 271, 281, 293, 359, 43 U.S.C. 387, unless otherwise noted.

■ 32. Amend the newly redesignated part 1217 as follows:

AMENDMENT TABLE FOR PART 1217

Amend	By removing the reference to:	And adding in its place:
§ 1217.200 (3 times)	Associate Director for Minerals Revenue Management.	Director for Office of Natural Resources Revenue.

Chapter II, Subchapter A

PART 218—[REDESIGNATED AS PART 1218]

■ 33. Transfer 30 CFR part 218 from chapter II, subchapter A, to chapter XII, subchapter A, and redesignate as 30 CFR part 1218.

Chapter XII, Subchapter A

PART 1218—COLLECTION OF MONIES AND PROVISION FOR GEOTHERMAL CREDITS AND INCENTIVES

■ 34. The authority citation for the newly redesignated 30 CFR part 1218 continues to read as follows:

Authority: 25 U.S.C. 396 *et seq.,* 396a *et seq.,* 2101 *et seq.* ; 30 U.S.C. 181 *et seq.,* 351 *et seq.,* 1001 *et seq.,* 1701 *et seq.;* 31 U.S.C. 3335; 43 U.S.C. 1301 *et seq.,* 1331 *et seq.,* and 1801 *et seq.*

■ 35. Amend the newly redesignated part 1218 as follows:

AMENDMENT TABLE FOR PART 1218

Amend	By removing the reference to:	And adding in its place:
§ 1218.10	30 CFR 210.10	§ 1210.10 of this chapter.
§ 1218.40(a)	MMS	Office of Natural Resources Revenue (ONRR).
§ 1218.40(e) (two times)	MMS	ONRR.

AMENDMENT TABLE FOR PART 1218—Continued

Amend	By removing the reference to:	And adding in its place:
§ 1218.40(e)	MMS's	ONRR's.
§ 1218.41(a) (two times)	MMS	ONRR.
§ 1218.41(b)	MMS	ONRR.
§ 1218.41(c)(3)	MMS	ONRR.
§ 1218.41(c)(4)	MMS-assigned	ONRR-assigned.
§ 1218.41(e)	MMS	ONRR.
§ 1218.41(f) (three times)	MMS	ONRR.
§ 1218.42(c)	MMS	ONRR.
§ 1218.50(c) (two times)	MMS	ONRR.
§ 1218.50(d)(1)	30 CFR 210.52	§ 1210.52 of this chapter.
§ 1218.50(d)(5)(i)	Minerals Management Service, Minerals Revenue Management.	Office of Natural Resources Revenue.
§ 1218.50(e)(1) (two times)	MMS	ONRR.
§ 1218.50(e)(2) (two times)	MMS	ONRR.
§ 1218.51(a), definition of *Courtesy Notice*	MMS-issued	ONRR-issued.
§ 1218.51(a), definition of *EFT*	MMS	ONRR.
§ 1218.51(a), definition of *Invoice document identification*.	MMS-assigned	ONRR-assigned.
§ 1218.51(a), definition of *Payment*	MMS	ONRR.
§ 1218.51(b) introductory text (two times)	MMS	ONRR.
§ 1218.51(b)(1) (two times)	MMS	ONRR.
§ 1218.51(b)(2) (two times)	MMS	ONRR.
§ 1218.51(b)(4) introductory text	MMS	ONRR.
§ 1218.51(c)(1)	Department of the Interior—Minerals Management Service.	Department of the Interior—Office of Natural Resources Revenue.
§ 1218.51(c)(1)	DOI–MMS	DOI–ONRR.
§ 1218.51(c)(2)	Department of the Interior-Minerals Management Service.	Department of the Interior-Office of Natural Resources Revenue.
§ 1218.51(c)(2)	DOI-MMS	DOI–ONRR.
§ 1218.51(c)(3)	Department of the Interior—Minerals Management Service.	Department of the Interior—Office of Natural Resources Revenue.
§ 1218.51(c)(3)	DOI–MMS	DOI–ONRR.
§ 1218.51(c)(4)	(two times) MMS	ONRR.
§ 1218.51(d)(2)	Minerals Management Service, Minerals Revenue Management.	Office of Natural Resources Revenue.
§ 1218.51(d)(3)	Minerals Management Service, Minerals Revenue Management.	Office of Natural Resources Revenue.
§ 1218.51(e)	Minerals Management Service, Minerals Revenue Management.	Office of Natural Resources Revenue.
§ 1218.51(f)(3)(ii)	218.155(c)	§ 1218.155(c).
§ 1218.51(f)(4)(i)	30 CFR 218.155(c)	§ 1218.155(c).
§ 1218.51(f)(4)(iii)	MMS	ONRR.
§ 1218.51(g) section heading	MMS	ONRR.
§ 1218.51(g)(1) (two times)	MMS	ONRR.
§ 1218.51(g)(1)	part 243	part 1243.
§ 1218.51(g)(2)	MMS	ONRR.
§ 1218.51(g)(3)	MMS	ONRR.
§ 1218.51(h)(1) (two times)	MMS	ONRR.
§ 1218.51(h)(1)	30 CFR 218.54	§ 1218.54
§ 1218.51(h)(2)	MMS	ONRR.
§ 1218.51(h)(2)	part 241	part 1241.
§ 1218.52(a) introductory text	MMS	ONRR.
§ 1218.52(c)(2)	MMS	ONRR.
§ 1218.52(d)	MMS	ONRR.
§ 1218.53(b) (two times)	MMS	ONRR.
§ 1218.53(b)	part 210	part 1210.
§ 1218.53(d) (two times)	MMS	ONRR.
§ 1218.54(e)	§ 218.42	§ 1218.42.
§ 1218.55(b)	§ 219.103	§ 1219.103.
§ 1218.100(a)	MMS	ONRR.
§ 1218.100(b)	Associate Director	Director.
§ 1218.100(c)	30 CFR 218.51	§ 1218.51.
§ 1218.102(a) (two times)	MMS	ONRR.
§ 1218.102(b) (two times)	MMS	ONRR.
§ 1218.102(b)	§ 218.51	§ 1218.51.
§ 1218.102(d)	§ 218.42	§ 1218.42.
§ 1218.103(a)	MMS	ONRR.
§ 1218.103(a)	§ 219.100	§ 1219.100.
§ 1218.103(a)	§ 219.101	§ 1219.101.
§ 1218.150(a)	MMS	ONRR.
§ 1218.150(b)	MMS	ONRR.
§ 1218.150(c) (two times)	MMS	ONRR.

AMENDMENT TABLE FOR PART 1218—Continued

Amend	By removing the reference to:	And adding in its place:
§ 1218.150(c)	§ 218.51	§ 1218.51.
§ 1218.150(e)	§ 218.42	§ 1218.42.
§ 1218.151 introductory text	250	part 250.
§ 1218.152	MMS	ONRR.
§ 1218.154(a) introductory text	MMS	ONRR.
§ 1218.154(b)	MMS	ONRR.
§ 1218.155(a)	§ 218.51	§ 1218.51.
§ 1218.155(c) (three times)	MMS	ONRR.
§ 1218.155(d)(1)	MMS	ONRR.
§ 1218.155(d)(3) (two times)	MMS	ONRR.
§ 1218.155(d)(3)	§ 218.51	§ 1218.51.
§ 1218.155(d)(4)	MMS	ONRR.
§ 1218.155(e) introductory text	Department of the Interior—MMS	Department of the Interior—ONRR.
§ 1218.200	MMS	ONRR.
§ 1218.201 introductory text	§ 218.51	§ 1218.51.
§ 1218.201(b)	§ 218.51(f)(1)	§ 1218.51(f)(1).
§ 1218.201(c)	MMS	ONRR.
§ 1218.201(c)	§ 218.51(f)(4)(iii)	§ 1218.51(f)(4)(iii).
§ 1218.202(a) (two times)	MMS	ONRR.
§ 1218.202(b) (two times)	MMS	ONRR.
§ 1218.202(b)	§ 218.51	§ 1218.51.
§ 1218.202(f)	§ 218.42	§ 1218.42.
§ 1218.203(b)	MMS	MMS.
§ 1218.203(d) (two times)	MMS	ONRR.
§ 1218.300	MMS	MMS.
§ 1218.301	30 CFR 218.51	§ 1218.51.
§ 1218.302(a)	Minerals Management Service (MMS)	ONRR.
§ 1218.302(a)	MMS	ONRR.
§ 1218.302(b) (two times)	MMS	ONRR.
§ 1218.302(b)	§ 218.51	§ 1218.51.
§ 1218.302(f)	§ 218.42	§ 1218.42.
§ 1218.303(a)(1)	30 CFR 206.351	§ 1206.351 of this chapter.
§ 1218.304	§ 206.356(b)	§ 1206.356 of this chapter.
§ 1218.305(a)	part 1206.	part 1206.
§ 1218.305(b)	MMS	ONRR.
§ 1218.306(a)(2)	MMS	ONRR.
§ 1218.306(b)	MMS	ONRR.
§ 1218.307	part 1206	part 1206.
§ 1218.520, definition of *Addressee of record for service of official correspondence.*	§ 218.540(b)(2)	§ 1218.540(b)(2).
§ 1218.520, definition of *Addressee of record for service of official correspondence.*	part 290, subpart B	part 1290.
§ 1218.520, definition of *Official correspondence.*	MMS	ONRR.
§ 1218.540 (section heading)	MMS	ONRR.
§ 1218.540 introductory text	MMS	ONRR.
§ 1218.540 introductory text	part 241	part 1241.
§ 1218.540(a) introductory text	MMS	ONRR.
§ 1218.540(b)(1)	MMS	ONRR.
§ 1218.540(b)(1)	part 290, subpart B	part 1290.
§ 1218.540(c)	MMS	ONRR.
§ 1218.560 (two times)	MMS	ONRR.
§ 1218.580	MMS Form–4444	Form MMS–4444.

Chapter II, Subchapter A

PART 219—[AMENDED]

■ 36. Transfer 30 CFR part 219, subpart C (§§ 219.100 through 219.105), from chapter II, subchapter C, to 30 CFR, chapter XII, subchapter A, and redesignate as "PART 1219—DISTRIBUTION AND DISBURSEMENT OF ROYALTIES, RENTALS, AND BONUSES" (§§ 1219.100 through 1219.105).

Subpart C [Reserved]

■ 37. Add and reserve a new subpart C to part 219 to read as set forth above.

Chapter XII, Subchapter A

PART 1219—DISTRIBUTION AND DISBURSEMENT OF ROYALTIES, RENTALS, AND BONUSES

■ 38. Add an authority citation for the newly redesignated 30 CFR part 1219 to read as follows:

Authority: Section 104, Pub. L. 97–451, 96 Stat. 2451 (30 U.S.C. 1714), Pub. L. 109–432, Div C, Title I, 120 Stat. 3000.

■ 39. Amend the newly redesignated part 1219 as follows:

AMENDMENT TABLE FOR PART 1219

Amend	By removing the reference to:	And adding in its place:
§ 1219.101(a)	Minerals Management Service (MMS)	Office of Natural Resources Revenue (ONRR).
§ 1219.101(a)	MMS	ONRR.
§ 1219.101(b)	§ 219.100	§ 1219.100.
§ 1219.101(c)(2 times)	MMS	ONRR.
§ 1219.102	MMS	ONRR.
§ 1219.102	Minerals Management Service, Minerals Revenue Management.	Office of Natural Resources Revenue.
§ 1219.103	MMS	ONRR.
§ 1219.104(a)(2 times)	MMS	ONRR.
§ 1219.104(b)(2 times)	MMS	ONRR.
§ 1219.104(c)	MMS	ONRR.

Chapter II, Subchapter A

PART 220—[REDESIGNATED AS PART 1220]

■ 40. Transfer 30 CFR part 220 from chapter II, subchapter A, to chapter XII, subchapter A, and redesignate as 30 CFR part 1220.

Chapter XII, Subchapter A

PART 1220—ACCOUNTING PROCEDURES FOR DETERMINING NET PROFIT SHARE PAYMENT FOR OUTER CONTINENTAL SHELF OIL AND GAS LEASES

■ 41. The authority citation for the newly redesignated 30 CFR part 1220 continues to read as follows:

Authority: Sec. 205, Pub. L. 95–372, 92 Stat. 643 (43 U.S.C. 1337).

■ 42. Amend the newly redesignated part 1220 as follows:

AMENDMENT TABLE FOR PART 1220

Amend	By removing the reference to :	And adding in its place:
§ 1220.001(a)	part 220	part 1220.
§ 1220.001(b)	part 220	part 1220.
§ 1220.001(b)	this chapter	this title.
§ 1220.002, definition of *Allowance for capital recovery*.	§ 220.020	§ 1220.020.
§ 1220.002, definition of *Capital recovery period,* paragraph (1).	MMS	Bureau of Ocean Energy Management, Regulation, and Enforcement (BOEMRE).
§ 1220.002, definition of *Direct cost*	§ 220.011	§ 1220.011.
§ 1220.002, definition of *Director*	MMS	ONRR.
§ 1220.002, definition of *Joint cost*	§ 220.011	§ 1220.011.
§ 1220.002, definition of *Net profit share base*	§ 220.021	§ 1220.021.
§ 1220.002, definition of *Net profit share base*	part 220	part 1220.
§ 1220.002, definitions of *Net profit share rate, NPSL, Production revenue*.	this chapter	this title.
§ 1220.002, definition of Person	part 260	part 1206.
§ 1220.003(a)	§ 220.012	§ 1220.012.
§ 1220.003(a)	§ 220.020	§ 1220.020.
§ 1220.003(b)	Minerals Management Service	Office of Natural Resources Revenue.
§ 1220.010(a)	§ 220.012	§ 1220.012.
§ 1220.010(a)	§ 220.020	§ 1220.020.
§ 1220.011 introductory text	§ 220.014	§ 1220.014.
§ 1220.011(b)(4) introductory text	§ 220.013(g)	§ 1220.013(g).
§ 1220.011(b)(4)(iii)	§ 220.013(g)	§ 1220.013(g).
§ 1220.011(c)(1)	§ 220.015	§ 1220.015.
§ 1220.011(c)(1)	§ 220.032	§ 1220.032.
§ 1220.011(c)(3)	§ 220.020	§ 1220.020.
§ 1220.011(c)(3)	§ 220.021(a)(3)	§ 1220.021(a)(3).
§ 1220.011(e) introductory text	§ 220.013(c)	§ 1220.013(c).
§ 1220.011(f)	§ 220.013(f)	§ 1220.013(f).
§ 1220.011(j)(2)(ii)	§ 220.020	§ 1220.020.
§ 1220.011(j)(2)(ii)	§ 220.021(a)(3)	§ 1220.021(a)(3).
§ 1220.011(k)	§ 220.014	§ 1220.014.
§ 1220.011(o)	§ 220.013	§ 1220.013.
§ 1220.012(a)	§ 220.021(b)(2)	§ 1220.021(b)(2).
§ 1220.012(b)	§ 220.021(c)(2)	§ 1220.021(c)(2).
§ 1220.012(c)(1)	§ 220.011(a)	§ 1220.011(a).
§ 1220.012(c)(2)	§ 220.011(e)	§ 1220.011(e).
§ 1220.012(c)(3)	§ 220.011(i)	§ 1220.011(i).
§ 1220.012(c)(4)	§ 220.011(c)	§ 1220.011(c).
§ 1220.012(c)(5)	§ 220.011(c)	§ 1220.011(c).
§ 1220.013(b)	§ 220.011(g)	§ 1220.011(g).

AMENDMENT TABLE FOR PART 1220—Continued

Amend	By removing the reference to :	And adding in its place:
§ 1220.013(c)	§ 220.011(c)	§ 1220.011(c).
§ 1220.013(c)	§ 220.020	§ 1220.020.
§ 1220.013(f)(4)	§ 220.011(f)	§ 1220.011(f).
§ 1220.013(i)	§ 220.011(g)	§ 1220.011(g).
§ 1220.015(a)(1)	§ 220.011(c)(3)	§ 1220.011(c)(3).
§ 1220.015(b)(1)	§ 220.011(d)	§ 1220.011(d).
§ 1220.020(a)(1)	§ 220.012(c)	§ 1220.012(c).
§ 1220.020(a)(2)	§ 220.011(e)	§ 1220.011(e).
§ 1220.020(a)(3)	§ 220.012(a)	§ 1220.012(a).
§ 1220.020(b)	§ 220.021(b)	§ 1220.021(b).
§ 1220.020(c)	§ 220.021(b)	§ 1220.021(b).
§ 1220.021(a)(2)	this chapter	this titleI.
§ 1220.021(a)(3)	§ 220.011(p)	§ 1220.011(p).
§ 1220.021(b)(2)	§ 220.012(a)	§ 1220.012(a).
§ 1220.021(b)(3)	§ 220.020	§ 1220.020.
§ 1220.021(c)(2)	§ 220.012(b)	§ 1220.012(b).
§ 1220.022	§ 220.021	§ 1220.021.
§ 1220.030(a) introductory text	part 220	part 1220.
§ 1220.030(a)(4) (two times)	§ 220.011(g)	§ 1220.011(g).
§ 1220.031(b) introductory text	part 220	part 1220.
§ 1220.031(c)	part 220	part 1220.
§ 1220.031(d)	part 220	part 1220.
§ 1220.031(e)	part 220	part 1220.
§ 1220.032(d)	§ 220.033	§ 1220.033.
§ 1220.032(d)	§ 220.015(a)(2)	§ 1220.015(a)(2).
§ 1220.032(d)	§ 220.020	§ 1220.020.
§ 1220.032(d)	§ 220.021(a)(3)	§ 1220.021(a)(3).
§ 1220.033(c)(1)	§ 220.034	§ 1220.034.
§ 1220.033(e)	§ 220.030(a)	§ 1220.030(a).
§ 1220.034(a)	§ 220.033	§ 1220.033.
§ 1220.034(d)	30 CFR part 290	part 1290 of this chapter.

Chapter II, Subchapter A

PART 227—[REDESIGNATED AS PART 1227]

■ 43. Transfer 30 CFR part 227 from chapter II, subchapter A, to chapter XII, subchapter A, and redesignate as 30 CFR part 1227.

Chapter XII, Subchapter A

PART 1227—DELEGATION TO STATES

■ 44. The authority citation for the newly redesignated 30 CFR part 1227 continues to read as follows:

Authority: 30 U.S.C. 1735; 30 U.S.C. 196; Pub. L. 102–154.

■ 45. Amend the newly redesignated part 1227 as follows:

AMENDMENT TABLE FOR PART 1227

Amend	By removing the reference to:	And adding in its place:
§ 1227.1	MMS Offshore Minerals Management program.	BOEMRE.
§ 1227.10(b)	MMS estimates 400	Office of Natural Resources Revenue (ONRR) estimates 400.
§ 1227.10(b) (two times)	MMS	ONRR.
§ 1227.10(b)	Minerals Management Service, 1849 C Street, NW., Washington, DC 20240.	Bureau of Ocean Energy Management, Regulation, and Enforcement, 381 Elden Street, Herndon, VA 20107.
§ 1227.101 (section heading)	MMS	ONRR.
§ 1227.101(a) introductory text	MMS	ONRR.
§ 1227.101(b) introductory text	MMS	ONRR.
§ 1227.101(c)	MMS	ONRR.
§ 1227.102 (section heading)	MMS	ONRR.
§ 1227.102 introductory text (two times)	MMS	ONRR.
§ 1227.102(a) (two times)	MMS	ONRR.
§ 1227.102(b) (two times)	MMS	ONRR.
§ 1227.102(d) (three times)	MMS	ONRR.
§ 1227.102(e)	MMS	ONRR.
§ 1227.102(f)	MMS	ONRR.
§ 1227.103 introductory text (2 times)	MMS	ONRR.
§ 1227.103 introductory text	MMS Associate Director for Minerals Revenue Management.	Director for Office of Natural Resources Revenue.
§ 1227.103(c)(2)(i)	MMS	ONRR.

AMENDMENT TABLE FOR PART 1227—Continued

Amend	By removing the reference to:	And adding in its place:
§ 1227.103(e)(3)(i)(A)	MMS	ONRR.
§ 1227.103(g)	MMS	ONRR.
§ 1227.104 (section heading)	MMS	ONRR.
§ 1227.104 (four times)	MMS	ONRR.
§ 1227.104	§ 227.103	§ 1227.103.
§ 1227.105 introductory text (three times)	MMS	ONRR.
§ 1227.105(a)	MMS	ONRR.
§ 1227.105(c)	MMS	ONRR.
§ 1227.105(d) (four times)	MMS	ONRR.
§ 1227.105(g)	MMS	ONRR.
§ 1227.105(h)	MMS	ONRR.
§ 1227.105(i)	MMS	ONRR.
§ 1227.106 introductory text (five times)	MMS	ONRR.
§ 1227.106(b)	MMS	ONRR.
§ 1227.106(d) (two times)	MMS	ONRR.
§ 1227.106(e)	MMS	ONRR.
§ 1227.107 (section heading)	MMS	ONRR.
§ 1227.107 (two times)	MMS	ONRR.
§ 1227.107	§ 227.104	§ 1227.104.
§ 1227.108 (section heading)	MMS	ONRR.
§ 1227.108 (three times)	MMS	ONRR.
§ 1227.109 (section heading)	MMS	ONRR.
§ 1227.109 (three times)	MMS	ONRR.
§ 1227.110(a) (five times)	MMS	ONRR.
§ 1227.110(a)	§ 227.108	§ 1227.108.
§ 1227.110(a)	www.mms.gov	www.boemre.gov.
§ 1227.110(b) introductory text	MMS	ONRR.
§ 1227.110(b) introductory text	MMS Associate Director for Minerals Revenue Management.	Director for Office of Natural Resources Revenue.
§ 1227.110(b)(1)	MMS	ONRR.
§ 1227.110(c) (five times)	MMS	ONRR.
§ 1227.110(d) (four times)	MMS	ONRR.
§ 1227.110(e)	MMS Associate Director for Minerals Revenue Management.	Director for Office of Natural Resources Revenue.
§ 1227.111(c)	MMS	ONRR.
§ 1227.112(b)	MMS	ONRR.
§ 1227.112(f)	MMS	ONRR.
§ 1227.112(g)	MMS	ONRR.
§ 1227.112(g)	section 227.801	§ 1227.801.
§ 1227.200(a) (four times)	MMS	ONRR.
§ 1227.200(c) (two times)	MMS	ONRR.
§ 1227.200(d)	MMS	ONRR.
§ 1227.200(e) introductory text (three times)	MMS	ONRR.
§ 1227.200(f)	MMS	ONRR.
§ 1227.200(f)	§ 227.201	§ 1227.201.
§ 1227.200(h)	MMS	ONRR.
§ 1227.200(i)	MMS's	ONRR's.
§ 1227.200(j)	§ 227.201	§ 1227.201.
§ 1227.201(a)	MMS	ONRR.
§ 1227.201(c)	§§ 227.801 and 227.802	§§ 1227.801 and 1227.802.
§ 1227.201(d)	MMS	ONRR.
§ 1227.300 introductory text	MMS	ONRR.
§ 1227.300(a)(4)	MMS	ONRR.
§ 1227.301(a)	MMS	ONRR.
§ 1227.301(b) (two times)	MMS	ONRR.
§ 1227.301(c)	MMS	ONRR.
§ 1227.301(e) (two times)	MMS	ONRR.
§ 1227.400(a)(4)	MMS	ONRR.
§ 1227.400(a)(6)	MMS	ONRR.
§ 1227.400(a)(7)	MMS	ONRR.
§ 1227.400(c)	MMS	ONRR.
§ 1227.401(b)	MMS	ONRR.
§ 1227.401(c)	MMS	ONRR.
§ 1227.401(d)	MMS	ONRR.
§ 1227.401(e) (two times)	MMS	ONRR.
§ 1227.401(f)	part 210	part 1210.
§ 1227.401(f) (two times)	MMS	ONRR.
§ 1227.401(g)	part 218	part 1218.
§ 1227.500(g)	MMS	ONRR.
§ 1227.501(a)	parts 216 and 218	parts 1216 and 1218.
§ 1227.501(a)	30 CFR 227.401(f) and (g)	30 CFR 1227.401(f) and (g).
§ 1227.501(a)	MMS	ONRR.

AMENDMENT TABLE FOR PART 1227—Continued

Amend	By removing the reference to:	And adding in its place:
§ 1227.501(c)	MMS	ONRR.
§ 1227.501(c)	part 219	part 1219.
§ 1227.600(a)(3)	MMS	ONRR.
§ 1227.600(b)(3) (two times)	MMS	ONRR.
§ 1227.600(d)	MMS	ONRR.
§ 1227.601(d) (two times)	MMS	ONRR.
§ 1227.700(d)(1)	MMS	ONRR.
§ 1227.800 (section heading)	MMS	ONRR.
§ 1227.800 introductory text	MMS's	ONRR's.
§ 1227.800(a)	MMS	ONRR.
§ 1227.800(b)(1)	§ 227.200(e)	§ 1227.200(e).
§ 1227.800(b)(2)	MMS	ONRR.
§ 1227.800(b)(3)	MMS	ONRR.
§ 1227.801 introductory text (two times)	MMS	ONRR.
§ 1227.801 introductory text	§ 227.106	§ 1227.106.
§ 1227.801(a)	MMS	ONRR.
§ 1227.801(b)(1)	§ 227.802	§ 1227.802.
§ 1227.801(b)(2)	§ 227.112	§ 1227.112.
§ 1227.801(b) introductory text (two times)	MMS	ONRR.
§ 1227.801(b)(3)(ii)	MMS	ONRR.
§ 1227.802 (section heading)	MMS	ONRR.
§ 1227.802 introductory text	MMS	ONRR.
§ 1227.802(a)	MMS	ONRR.
§ 1227.802(b)	MMS	ONRR.
§ 1227.802(b)	§ 227.803	§ 1227.803.
§ 1227.802(c)	MMS	ONRR.
§ 1227.802(d) introductory text	MMS	ONRR.
§ 1227.802(e) (two times)	MMS	ONRR.
§ 1227.803(a)	MMS	ONRR.
§ 1227.803(f) introductory text	MMS	ONRR.
§ 1227.803(g)	MMS	ONRR.
§ 1227.803(h) introductory text	MMS	ONRR.
§ 1227.803(h)(2)	§ 227.106	§ 1227.106.
§ 1227.804 (three times)	MMS	ONRR.

Chapter II, Subchapter A

PART 228—[REDESIGNATED AS PART 1228]

■ 46. Transfer 30 CFR part 228 from chapter II, subchapter A, to chapter XII, subchapter A, and redesignate as 30 CFR part 1228.

Chapter XII, Subchapter A

PART 1228—COOPERATIVE ACTIVITIES WITH STATES AND INDIAN TRIBES

■ 47. The authority citation for the newly redesignated 30 CFR part 1228 continues to read as follows:

Authority: Sec. 202, Pub. L. 97–451, 96 Stat. 2457 (30 U.S.C. 1732).

■ 48. Amend the newly redesignated part 1228 as follows:

AMENDMENT TABLE FOR PART 1228

Amend	By removing the reference to:	And adding in its place:
§ 1228.5(a)	Minerals Management Service (MMS)	Office of Natural Resources Revenue (ONRR).
§ 1228.5(c) (3 times)	MMS	ONRR.
§ 1228.6, definition of *Audit*	MMS	ONRR.
§ 1228.10(b)	Minerals Management Service	Bureau of Ocean Energy Management, Regulation, and Enforcement.
§ 1228.100(a)	MMS	ONRR.
§ 1228.100(b) introductory text	MMS	ONRR.
§ 1228.100(c)	§ 228.105	§ 1228.105.
§ 1228.101(d) (3 times)	MMS	ONRR.
§ 1228.102 (5 times)	MMS	ONRR.
§ 1228.103(a)	MMS	ONRR.
§ 1228.104(a)	MMS	ONRR.
§ 1228.104(c)	MMS	ONRR.
§ 1228.108	MMS	ONRR.

Chapter II, Subchapter A

PART 229—[REDESIGNATED AS PART 1229]

■ 49. Transfer 30 CFR part 229 from chapter II, subchapter A, to chapter XII, subchapter A, and redesignate as 30 CFR part 1229.

Chapter XII, Subchapter A

PART 1229—DELEGATION TO STATES

■ 50. The authority citation for the newly redesignated 30 CFR part 1229 continues to read as follows:

Authority: 30 U.S.C. 1735.

■ 51. Amend the newly redesignated part 1229 as follows:

AMENDMENT TABLE FOR PART 1229

Amend	By removing the reference to:	And adding in its place:
§ 1229.6	part 228	part 1228.
§ 1229.100(a)(1)	MMS	to the Office of Natural Resources Revenue (ONRR).
§ 1229.100(a)(1)	MMS	ONRR.
§ 1229.100(a)(2) (three times)	MMS	ONRR.
§ 1229.100(b) introductory text	MMS	ONRR.
§ 1229.101(b)	part 228	part 1228.
§ 1229.102(b)(4)	MMS	ONRR.
§ 1229.102(b)(5)	MMS	ONRR.
§ 1229.103(a)	§ 229.101	$sect; 1229.101.
§ 1229.104(b)	MMS	ONRR.
§ 1229.104(b)	§ 229.100	§ 1229.100.
§ 1229.104(d)	MMS	ONRR.
§ 1229.104(e)	MMS	ONRR.
§ 1229.104(f)	MMS	ONRR.
§ 1229.107(a)	MMS	ONRR.
§ 1229.107(a)	part 219	part 1219.
§ 1229.107(c)	MMS	ONRR.
§ 1229.108	MMS	ONRR.
§ 1229.111	MMS	ONRR.
§ 1229.111	§ 229.104	§ 1229.104.
§ 1229.120 (two times)	MMS	ONRR.
§ 1229.121(b)	MMS	ONRR.
§ 1229.121(c) (two times)	MMS	ONRR.
§ 1229.121(c)	§ 229.124	§ 1229.124
§ 1229.121(d)	MMS	ONRR.
§ 1229.122(a) (two times)	MMS	ONRR.
§ 1229.122(b) (two times)	MMS	ONRR.
§ 1229.122(c)	MMS	ONRR.
§ 1229.123(b)(2) (three times)	MMS	ONRR.
§ 1229.123(b)(3)(i)	MMS	ONRR.
§ 1229.123(b)(3)(v) (two times)	MMS	ONRR.
§ 1229.123(b)(3)(vii)	MMS	ONRR.
§ 1229.125(a)	MMS	ONRR.
§ 1229.125(b) (two times)	MMS	ONRR.
§ 1229.126(a)	parts 243 and 290	parts 1243 and 1290.
§ 1229.126(a) (three times)	MMS	ONRR.
§ 1229.126(b)	MMS	ONRR.

Chapter II, Subchapter A

■ 51A. Remove reserved parts 230 through 234 from subchapter A.

PART 241—[REDESIGNATED AS PART 1241]

■ 52. Transfer 30 CFR part 241 from chapter II, subchapter A, to chapter XII, subchapter A, and redesignate as 30 CFR part 1241.

Chapter XII, Subchapter A

PART 1241—PENALTIES

■ 53. The authority citation for the newly redesignated 30 CFR part 1241 continues to read as follows:

Authority: 25 U.S.C. 396 *et seq.,* 396a *et seq.,* 2101 *et seq.;* 30 U.S.C. 181 *et seq.,* 351 *et seq.,* 1001 *et seq.,* 1701 *et seq.;* 43 U.S.C. 1301 *et seq.,* 1331 *et seq.,* 1801 *et seq.*

■ 54. Amend the newly redesignated part 1241 as follows:

AMENDMENT TABLE FOR PART 1241

Amend	By removing the reference to :	And adding in its place:
§ 1241.51 (section heading)	MMS	Office of Natural Resources Revenue (ONRR).
§ 1241.51(b)	part 218	part 1218 of this chapter.
§ 1241.55(b) introductory text	§ 241.72	§ 1241.72.
§ 1241.55(b)(2) (two times)	part 243	part 1243
§ 1241.56(a) (two times)	§ 241.54	§ 1241.54

AMENDMENT TABLE FOR PART 1241—Continued

Amend	By removing the reference to :	And adding in its place:
§ 1241.61 (section heading)	MMS	ONRR
§ 1241.61	part 218	part 1218
§ 1241.63(b) introductory text	§ 241.72	§ 1241.72
§ 1241.63(b)(2) (two times)	part 243	part 1243
§ 1241.64(a) (two times)	§ 241.62	§ 1241.62
§ 1241.70 (section heading)	MMS	ONRR
§ 1241.71(b)	§ 241.75(d)	§ 1241.75(d)
§ 1241.71(b)	MMS	ONRR
§ 1241.71(b)	30 CFR 218.54	§ 1218.54 of this chapter.
§ 1241.72	§§ 241.54, 241.56, 241.62 or § 241.64	§§ 241.54, 1241.56, 1241.62 or § 1241.64.
§ 1241.75(a)	§§ 241.53 or § 241.61	§§ 1241.53 or § 1241.61.
§ 1241.75(a)	§ 241.54, § 241.56, § 241.62, or § 241.64	§ 1241.54, § 1241,56, § 1241.62, or § 1241.64.
§ 1241.75(b)	§ 241.54, § 241.56, § 241.62, or § 241.64	§ 1241.54, § 1241,56, § 1241.62, or § 1241.64.
§ 1241.75(b)	§ 241.73	§ 1241.73.
§ 1241.75(d)(1)	§ 241.54, § 241,56, § 241.62, or § 241.64	§ 1241.54, § 1241,56, § 1241.62, or § 1241.64.
§ 1241.75(d)(2)	§ 241.72	§ 241.72.
§ 1241.75(d)(2)	§ 241.55(b) or § 241.63(b)	§ 1241.55(b) or § 1241.63(b).
§ 1241.75(d)(2)	§ 241.73	§ 1241.73.
§ 1241.75(d)(3)	§ 241.73	§ 1241.73.
§ 1241.75(e)	§ 241.77	§ 1241.77.
§ 1241.76 (section heading)	MMS	ONRR.
§ 1241.77 (section heading)	MMS	ONRR.
§ 1241.77(a)	MMS	ONRR.
§ 1241.77(b) (two times)	§ 241.74	§ 1241.74.
§ 1241.80	§ 241.60(b)	§ 1241.60(b).

Chapter II, Subchapter A

■ 54A. Remove reserved part 242 from subchapter A.

PART 243—[REDESIGNATED AS PART 1243]

■ 55. Transfer 30 CFR part 243 from chapter II, subchapter A, to 30 CFR, chapter XII, subchapter A, and redesignate as 30 CFR part 1243.

Chapter XII, Subchapter A

PART 1243—SUSPENSIONS PENDING APPEAL AND BONDING—OFFICE OF NATURAL RESOURCES REVENUE

■ 56. The authority citation for the newly redesignated 30 CFR part 1243 continues to read as follows:

Authority: 5 U.S.C. 301 *et seq.;* 25 U.S.C. 396 *et seq.,* 396a *et seq.,* 2101 *et seq.;* 30 U.S.C. 181 *et seq.,* 351 *et seq.,* 1001 *et seq.,* 1701 *et seq.;* 31 U.S.C. 9701; 43 U.S.C. 1301 *et seq.,* 1331 *et seq.,* and 1801 *et seq.*

■ 57. Revise the heading of newly designated part 1243 to read as set forth above.

■ 58. Amend the newly redesignated part 1243 as follows:

AMENDMENT TABLE FOR PART 1243

Amend	By removing the reference to:	And adding in its place:
§ 1243.1(a)	part 290, subpart B	part 1290 of this chapter.
§ 1243.3, definition of *Designee*	§ 218.52	§ 1218.52.
§ 1243.3, definition of *MMS bond-approving officer*.	MMS	ONRR.
§ 1243.3, definition of *MMS bond-approving Officer*.	Associate Director for Minerals Revenue Management.	Director for Office of Natural Resources Revenue (ONRR).
§ 1243.3, definition of *MMS-specified surety instrument* (three times).	MMS-specified	ONRR-specified.
§ 1243.3, definition of *Notice of order* (two times).	MMS	ONRR.
§ 1243.3, definition of Order	part 208	part 1208.
§ 1243.4(b)(2)	§ 243.5	§ 1243.5.
§ 1243.5	§ 243.4(a)(1)	§ 1243.4(a)(1).
§ 1243.6	§ 243.4(a)(1)	§ 1243.4(a)(1).
§ 1243.7 introductory text	§ 243.5	§ 1243.5.
§ 1243.7(a)	MMS	ONRR.
§ 1243.7(a)	§ 243.200(a)	§ 1243.200(a).
§ 1243.7(b)	MMS	ONRR.
§ 1243.8 (section heading)	MMS	ONRR.
§ 1243.8(a)(1) (two times)	MMS	ONRR.
§ 1243.8(a)(1)	MMS for OCS leases	BOEMRE for OCS leases.
§ 1243.8(a)(2) introductory text	MMS	ONRR.
§ 1243.8(a)(2)(i)	MMS-specified	ONRR-specified.
§ 1243.8(a)(2)(i)	MMS	ONRR.
§ 1243.8(b)(1) (two times)	MMS	ONRR.
§ 1243.8(b)(2) (two times)	MMS	ONRR.
§ 1243.8(b)(2)	MMS-specified	ONRR-specified.

AMENDMENT TABLE FOR PART 1243—Continued

Amend	By removing the reference to:	And adding in its place:
§ 1243.8(d)	MMS	ONRR.
§ 1243.9 (section heading)	MMS	ONRR.
§ 1243.9(a)	MMS	ONRR.
§ 1243.9(b) (two times)	MMS	ONRR.
§ 1243.10 (section heading)	MMS	ONRR.
§ 1243.10(a)(1)	MMS-specified	ONRR-specified.
§ 1243.10(b) introductory text	MMS	ONRR.
§ 1243.10(b)(1)	MMS	ONRR.
§ 1243.10(b)(4) (two times)	§ 243.101(b)	§ 1243.101(b).
§ 1243.10(b)(4)	MMS	ONRR.
§ 1243.10(b)(5)	§ 243.8 or § 243.9	§ 1243.8 or § 1243.9.
§ 1243.10(b)(6)	MMS	ONRR.
§ 1243.10(b)(6)	§ 243.202(c)	§ 1243.202(c).
§ 1243.10(b)(6)	MMS-specified	ONRR-specified.
§ 1243.11 (section heading)	MMS	ONRR.
§ 1243.12	MMS-specified	ONRR-specified.
§ 1243.100 (section heading)	MMS-specified	ONRR-specified.
§ 1243.100(a)	MMS-specified	ONRR-specified.
§ 1243.100(a) (two times)	MMS	ONRR.
§ 1243.100(a)	MMS-specified	ONRR-specified.
§ 1243.100(b) introductory text	MMS	ONRR.
§ 1243.100(b)(2)	MMS	ONRR.
§ 1243.101 (section heading)	MMS	ONRR.
§ 1243.101(a) introductory text	MMS	ONRR.
§ 1243.101(a)(1)	MMS-specified	ONRR-specified.
§ 1243.200(a) introductory text (two times)	MMS	ONRR.
§ 1243.200(b) (two times)	MMS	ONRR.
§ 1243.200(c)	MMS	ONRR.
§ 1243.201 (section heading)	MMS	ONRR.
§ 1243.201(a)	MMS	ONRR.
§ 1243.201(c) introductory text	MMS	ONRR.
§ 1243.201(c) introductory text	§ 243.200(a)	§ 1243.200(a).
§ 1243.201(c)(2)(i)	30 CFR 218.51	§ 1218.51 of this chapter.
§ 1243.202 (section heading)	MMS	ONRR.
§ 1243.202(a)	§ 243.201(b)	§ 1243.201(b).
§ 1243.202(a)	MMS	ONRR.
§ 1243.202(a)	§§ 243.201(b) and (c)	§§ 1243.201(b) and (c).
§ 1243.202(b)	§ 243.201(c)	§ 1243.201(c).
§ 1243.202(c)	MMS-specified	ONRR-specified.

Chapter II, Subchapter C

PART 290—[AMENDED]

■ 59. Transfer 30 CFR part 290, subpart B (§§ 290.100 through 290.110), from chapter II, subchapter C, to 30 CFR, chapter XII, subchapter B, and redesignate as "PART 1290—APPEAL PROCEDURES FOR OFFICE OF NATURAL RESOURCES REVENUE" (§§ 1290.100 through 1290.110).

Subpart B [Reserved]

■ 60. Add and reserve a new subpart B to part 290 to read as set forth above.

Chapter XII, Subchapter B

PART 1290—APPEAL PROCEDURES FOR OFFICE OF NATURAL RESOURCES REVENUE

■ 61. Add an authority citation for the newly redesignated 30 CFR part 1290 to read as follows:

Authority: 5 U.S.C. 301 *et seq.;* 43 U.S.C. 1331.

■ 62. Amend the newly redesignated part 1290 as follows:

AMENDMENT TABLE FOR PART 1290

Amend	By removing the reference to:	And adding in its place:
§ 1290.100	Minerals Management Service (MMS)	Office of Natural Resources Revenue (ONRR).
§ 1290.100	Minerals Revenue Management (MRM)	ONRR.
§ 1290.102, definition of *Delegated State*	MMS	ONRR.
§ 1290.102, definition of *Delegated State*	part 227	part 1227 of this chapter.
§ 1290.102, definition of *Designee*	30 CFR 218.52	§ 1218.52 of this chapter.
§ 1290.102, definition of *Notice of Order* (2 times)..	MMS	ONRR.
§ 1290.102, definition of *Order*	MMS Director, MMS MRM, or a delegated state.	ONRR Director, or a delegated state.
§ 1290.102, definition of *Order,* paragraph (1)(ii)	MMS	ONRR.

AMENDMENT TABLE FOR PART 1290—Continued

Amend	By removing the reference to:	And adding in its place:
§ 1290.102, definition of *Order,* paragraph (2)(iii).	MMS	ONRR.
§ 1290.102, definition of *Order,* paragraph (2)(iv).	part 241	part 1241.
§ 1290.102, definition of Party	MMS	ONRR.
§ 1290.103(a)	§ 290.104	§ 1290.104.
§ 1290.103(b)	§ 290.106	§ 1290.106.
§ 1290.104(b)	part 243	part 1243.
§ 1290.105(a) introductory text	Minerals Management Service (MMS Director)	Office of Natural Resources Revenue (ONRR Director).
§ 1290.105(d)	MMS	ONRR.
§ 1290.105(e)	MMS	ONRR.
§ 1290.105(f)	MMS	ONRR.
§ 1290.105(g)	MMS	ONRR.
§ 1290.106(a)	§ 290.103	§ 1290.103.
§ 1290.106(a)	§ 290.105(a)(2)	§ 1290.105(a)(2).
§ 1290.108	MMS	ONRR.
§ 1290.110(a) introductory text	MMS Royalty Management Program (RMP)	Office of Natural Resources Revenue (ONRR).
§ 1290.110(a)(1)	MMS	ONRR.
§ 1290.110(a)(2)	part 290, subpart B	part 1290.

[FR Doc. 2010–24721 Filed 10–1–10; 8:45 am]

BILLING CODE 4310–MR–P

DEPARTMENT OF HOMELAND SECURITY

Coast Guard

33 CFR Part 117

[Docket No. USCG–2009–1075]

RIN 1625–AA09

Drawbridge Operation Regulation; Atlantic Intracoastal Waterway, Beaufort, SC

AGENCY: Coast Guard, DHS.

ACTION: Temporary rule.

SUMMARY: The Coast Guard is revising the operating schedule for the U.S. Highway 21, Sea Island Parkway Bridge at mile marker 536 over the Beaufort River (Atlantic Intracoastal Waterway). This bridge is also known as the Lady's Island Bridge. Due to ongoing construction on the McTeer Bridge, which is across the Atlantic Intracoastal Waterway at mile 539.0 in Port Royal, South Carolina, vehicle traffic is currently being rerouted from the McTeer Bridge to the Lady's Island Bridge. This rerouting has resulted in increased vehicle traffic congestion on the Lady's Island Bridge. As a result of the increased vehicle traffic congestion, Beaufort County has requested a revision to the federal regulation setting forth the Lady's Island Bridge operating schedule. Such a revision will alleviate excessive vehicle congestion on the Lady's Island Bridge while permitting sufficient access for maritime passage underneath the bridge.

DATES: This temporary final rule is effective from October 4, 2010 to October 4, 2011.

ADDRESSES: Documents indicated in this preamble as being available in the docket, are part of docket USCG–2009–1075 and are available by going to *http://www.regulations.gov,* inserting USCG–2009–1075 in the "Keyword" box, and then clicking "Search." This material is also available for inspection or copying at the Docket Management Facility (M–30), U.S. Department of Transportation, West Building Ground Floor, Room W12–140, 1200 New Jersey Avenue, SE., Washington, DC, 20590, between 9 a.m. and 5 p.m., Monday through Friday, except Federal holidays.

FOR FURTHER INFORMATION CONTACT: If you have questions on this temporary rule, call or e-mail Mr. Gene Stratton, Coast Guard; telephone 305–415–6740, e-mail *Allen.E.Stratton@uscg.mil.* If you have questions on viewing the docket, call Renee V. Wright, Program Manager, Docket Operations, telephone 202–366–9826.

SUPPLEMENTARY INFORMATION:

Regulatory Information

The Coast Guard is issuing this temporary final rule without prior notice and opportunity to comment pursuant to authority under section 4(a) of the Administrative Procedure Act (APA) (5 U.S.C. 553(b)). This provision authorizes an agency to issue a rule without prior notice and opportunity to comment when the agency for good cause finds that those procedures are "impracticable, unnecessary, or contrary to the public interest." Under 5 U.S.C. 553(b)(B), the Coast Guard finds that good cause exists for not publishing a notice of proposed rulemaking (NPRM) with respect to this rule because of increased vehicle congestion on the Lady's Island Bridge due to the rerouting of traffic from the McTeer Bridge, which is currently undergoing construction. Beaufort County Emergency Management has requested an immediate schedule change to alleviate this excessive vehicle congestion. The revised schedule for the Lady's Island Bridge does not unduly affect access to the waterway by the maritime public.

Under 5 U.S.C. 553(d)(3), the Coast Guard finds that good cause exists for making this rule effective less than 30 days after publication in the **Federal Register**. As described above, Beaufort County Emergency Management has requested an immediate schedule change to alleviate the excessive vehicle congestion on the Lady's Island Bridge.

Basis and Purpose

Two bridges serve Lady's Island, GA. Ongoing construction on the McTeer Bridge has resulted in the rerouting of vehicle traffic from the McTeer Bridge to the Lady's Island Bridge. Beaufort County Emergency Management has requested an immediate revision to the opening schedule for the Lady's Island Bridge at mile marker 536 over the Beaufort River (Atlantic Intracoastal Waterway). This operating schedule revision is necessary to accommodate increased vehicle traffic on the Lady's Island Bridge. The revised schedule will alleviate the excessive vehicle traffic

that has resulted from the McTeer Bridge construction.

Discussion of Rule

The current schedule, as described in the Code of Federal Regulations, is as follows:

33 CFR 117.911(f) Lady's Island Bridge, across the Beaufort River, Mile 536.0 at Beaufort. The draw shall operate as follows:

(1) On Monday through Friday, except Federal holidays:

(i) From 7 a.m. to 9 a.m. and 4 p.m. to 6 p.m., the draw need not open; and,

(ii) Between 9 a.m. to 4 p.m., the draw need open only on the hour and half-hour.

(2) At all other times the draw shall open on signal.

This temporary rule changes the scheduled closing times for the Lady's Island Bridge to enable more closures during peak vehicle traffic times between 7:15 a.m. and 8:59 a.m., 11:15 a.m. and 12:59 p.m., and 4:15 p.m. to 5:59 p.m. This schedule revision also allows draw openings only on the hour between 9 a.m. and 4 p.m., rather than on both the hour and half-hour.

Regulatory Analyses

We developed this rule after considering numerous statutes and executive orders related to rulemaking. Below we summarize our analyses based on 13 of these statutes or executive orders.

Regulatory Planning and Review

This rule is not a significant regulatory action under section 3(f) of Executive Order 12866, Regulatory Planning and Review, and does not require an assessment of potential costs and benefits under section 6(a)(3) of that Order. The Office of Management and Budget has not reviewed it under that Order.

Small Entities

Under the Regulatory Flexibility Act (5 U.S.C. 601–612), we have considered whether this rule would have a significant economic impact on a substantial number of small entities. The term "small entities" comprises small businesses, not-for-profit organizations that are independently owned and operated and are not dominant in their fields, and governmental jurisdictions with populations of less than 50,000.

The Coast Guard certifies under 5 U.S.C. 605(b) that this rule will not have a significant economic impact on a substantial number of small entities.

This rule will affect the following entities, some of which may be small entities: The owners or operators of vessels intending to transit underneath the Lady's Island Bridge from 7:15 a.m. to 5:59 p.m. Monday through Friday, and who require that the draw be open in order to do so. These small entities will have a slightly decreased number of draw openings.

This rule will not have a significant economic impact on a substantial number of small entities for the following reasons: (1) The Lady's Island Bridge will continue to operate on demand outside the restricted hours of 7:15 a.m. to 5:59 p.m.; (2) the majority of vessels that transit underneath the bridge can safely do so without the draw being open; and (3) despite the decreased number of draw openings, there will still be several openings during the restricted hours.

Assistance for Small Entities

Under section 213(a) of the Small Business Regulatory Enforcement Fairness Act of 1996 (Pub. L. 104–121), we offer to assist small entities in understanding the rule so that they can better evaluate its effects on them and participate in the rulemaking process.

Small businesses may send comments on the actions of Federal employees who enforce, or otherwise determine compliance with, Federal regulations to the Small Business and Agriculture Regulatory Enforcement Ombudsman and the Regional Small Business Regulatory Fairness Boards. The Ombudsman evaluates these actions annually and rates each agency's responsiveness to small business. If you wish to comment on actions by employees of the Coast Guard, call 1–888–REG–FAIR (1–888–734–3247). The Coast Guard will not retaliate against small entities that question or complain about this rule or any policy or action of the Coast Guard.

Collection of Information

This rule calls for no new collection of information under the Paperwork Reduction Act of 1995 (44 U.S.C. 3501–3520).

Federalism

A rule has implications for federalism under Executive Order 13132, Federalism, if it has a substantial direct effect on State or local governments and would either preempt State law or impose a substantial direct cost of compliance on them. We have analyzed this rule under that Order and have determined that it does not have implications for federalism.

Unfunded Mandates Reform Act

The Unfunded Mandates Reform Act of 1995 (2 U.S.C. 1531–1538) requires Federal agencies to assess the effects of their discretionary regulatory actions. In particular, the Act addresses actions that may result in the expenditure by a State, local, or tribal government, in the aggregate, or by the private sector of $100,000,000 (adjusted for inflation) or more in any one year. Though this rule will not result in such an expenditure, we do discuss the effects of this rule elsewhere in this preamble.

Taking of Private Property

This rule will not cause a taking of private property or otherwise have taking implications under Executive Order 12630, Governmental Actions and Interference with Constitutionally Protected Property Rights.

Civil Justice Reform

This rule meets applicable standards in sections 3(a) and 3(b)(2) of Executive Order 12988, Civil Justice Reform, to minimize litigation, eliminate ambiguity, and reduce burden.

Protection of Children

We have analyzed this rule under Executive Order 13045, Protection of Children from Environmental Health Risks and Safety Risks. This rule is not an economically significant rule and would not create an environmental risk to health or risk to safety that may disproportionately affect children.

Indian Tribal Governments

This rule does not have tribal implications under Executive Order 13175, Consultation and Coordination with Indian Tribal Governments, because it does not have a substantial direct effect on one or more Indian tribes, on the relationship between the Federal Government and Indian tribes, or on the distribution of power and responsibilities between the Federal Government and Indian tribes.

Energy Effects

We have analyzed this rule under Executive Order 13211, Actions Concerning Regulations That Significantly Affect Energy Supply, Distribution, or Use. We have determined that it is not a "significant energy action" under that order because it is not a "significant regulatory action" under Executive Order 12866 and is not likely to have a significant adverse effect on the supply, distribution, or use of energy. The Administrator of the Office of Information and Regulatory Affairs has not designated it as a significant energy action. Therefore, it does not

require a Statement of Energy Effects under Executive Order 13211.

Technical Standards

The National Technology Transfer and Advancement Act (NTTAA) (15 U.S.C. 272 note) directs agencies to use voluntary consensus standards in their regulatory activities unless the agency provides Congress, through the Office of Management and Budget, with an explanation of why using these standards would be inconsistent with applicable law or otherwise impractical. Voluntary consensus standards are technical standards (*e.g.,* specifications of materials, performance, design, or operation; test methods; sampling procedures; and related management systems practices) that are developed or adopted by voluntary consensus standards bodies.

This rule does not use technical standards. Therefore, we did not consider the use of voluntary consensus standards.

Environment

We have analyzed this rule under Department of Homeland Security Management Directive 023–01 and Commandant Instruction M16475.lD, which guide the Coast Guard in complying with the National Environmental Policy Act of 1969 (NEPA) (42 U.S.C. 4321–4370f), and have concluded that this action is one of a category of actions that do not individually or cumulatively have a significant effect on the human environment. This rule is categorically excluded, under figure 2–1, paragraph (32)(e), of the Instruction.

Under figure 2–1, paragraph (32)(e), of the Instruction, an environmental analysis checklist and a categorical exclusion determination are not required for this rule.

List of Subjects in 33 CFR Part 117

Bridges.

■ For the reasons discussed in the preamble, the Coast Guard amends 33 CFR part 117 as follows:

PART 117—DRAWBRIDGE OPERATION REGULATIONS

■ 1. The authority citation for part 117 continues to read as follows:

Authority: 33 U.S.C. 499; 33 CFR 1.05–1; and Department of Homeland Security Delegation No. 0170.1.

■ 2. Suspend § 117.911(f) from October 4, 2010 until October 4, 2011.

■ *3. From October 4, 2010 until October 4, 2011 add § 117.911*(g) to read as follows:

§ 117.911 Atlantic Intracoastal Waterway, Little River to Savannah River.

* * * * *

(g) Lady's Island Bridge, across the Beaufort River, Mile 536.0 at Beaufort. The draw shall operate as follows:

(1) On Monday through Friday, except federal holidays:

(i) From 7:15 a.m. to 8:59 a.m., 11:15 a.m. to 12:59 p.m., and 4:15 p.m. to 5:59 p.m. the draw need not open; and

(ii) Between 9 a.m. to 11 a.m. and 1 p.m. to 4 p.m., the draw need open only on the hour.

(2) At all times other than those specified in (1) above, the draw shall open on signal.

Dated: September 21, 2010.

W.D. Baumgartner,

Rear Admiral, U.S. Coast Guard, Commander, Seventh Coast Guard District.

[FR Doc. 2010–24645 Filed 10–1–10; 8:45 am]

BILLING CODE 9110–04–P

DEPARTMENT OF HOMELAND SECURITY

Coast Guard

33 CFR Part 165

[Docket No. USCG–2010–0886]

RIN 1625–AA00

Regulated Navigation Area; Reserved Channel, Boston Harbor, Boston, MA

AGENCY: Coast Guard, DHS.

ACTION: Temporary final rule.

SUMMARY: The Coast Guard is establishing a Regulated Navigation Area (RNA) in Boston Harbor, Reserved Channel, the Boston Marine Industrial Park and a portion of the Boston Inner Harbor shipping channel, Boston, Massachusetts, for the offload of six cranes from the barge CHICAGO BRIDGE to Conley Terminal in South Boston. This rule is intended to control entry to the Reserved Channel, establish operating conditions for those vessels allowed entry into the Reserved Channel and control the speed of all vessels transiting within the RNA. The RNA is necessary to protect participants and vessels from the hazards associated with the offload of these cranes.

DATES: This rule is effective in the Code of Federal Regulations from October 4, 2010 through November 15, 2010, and is effective with actual notice for purposes of enforcement beginning on September 20, 2010.

ADDRESSES: Documents indicated in this preamble as being available in the docket are part of docket USCG–2010–0886 and are available online by going to *http://www.regulations.gov,* inserting USCG–2010–0886 in the "Keyword" box, and then clicking "Search." They are also available for inspection or copying at the Docket Management Facility (M–30), U.S. Department of Transportation, West Building Ground Floor, Room W12–140, 1200 New Jersey Avenue, SE., Washington, DC 20590, between 9 a.m. and 5 p.m., Monday through Friday, except Federal holidays.

FOR FURTHER INFORMATION CONTACT: If you have questions on this temporary rule, call or e-mail Lieutenant Commander Pamela P. Garcia, Waterways Management Division, Coast Guard; telephone 617–223–3028, e-mail *Pamela.P.Garcia@uscg.mil.* If you have questions on viewing the docket, call Renee V. Wright, Program Manager, Docket Operations, telephone 202–366–9826.

SUPPLEMENTARY INFORMATION:

Regulatory Information

The Coast Guard is issuing this temporary final rule without prior notice and opportunity to comment pursuant to authority under section 4(a) of the Administrative Procedure Act (APA) (5 U.S.C. 553(b)). This provision authorizes an agency to issue a rule without prior notice and opportunity to comment when the agency for good cause finds that those procedures are "impracticable, unnecessary, or contrary to the public interest." Under 5 U.S.C. 553(b)(B), the Coast Guard finds that good cause exists for not publishing a notice of proposed rulemaking (NPRM) with respect to this rule. The Coast Guard was not provided with the logistics regarding the offload operation until September 8, 2010. This did not leave sufficient time to draft and publish an NPRM or take public comments, making prior notice and opportunity to comment impracticable without delaying the crane offloading. The crane offloading benefits a public agency, the Massachusetts Port Authority (Massport), and therefore it would be contrary to the public interest to delay the offloading to afford prior notice and opportunity to comment; it would also be contrary to the public interest to let the crane offloading proceed without establishing an RNA, because this would unnecessarily jeopardize public safety during the offloading.

For the same reasons under 5 U.S.C. 553(d)(3), the Coast Guard finds that good cause exists for making this rule effective less than 30 days after publication in the **Federal Register.**

Basis and Purpose

This temporary rule establishes the Reserved Channel, the Boston Marine Industrial Park and a portion of the Boston Inner Harbor shipping channel, Boston, Massachusetts, as a Regulated Navigation Area while the barge CHICAGO BRIDGE conducts crane offload operations at Conley Terminal, Berth 12, for the benefit of the Massachusetts Port Authority, a public agency. The offload evolution requires a sea state no greater than 1 foot. This RNA intends to control the movement of vessels within the regulated area to a no-wake speed or bare steerage, and have all vessels maintain a minimum distance of 100 yards in all directions from the barge CHICAGO BRIDGE. The RNA will protect those conducting the crane offload operation and the general maritime public from the dangers inherent in such an evolution. The Captain of the Port (COTP) anticipates minimal negative impact on vessel traffic due to the implementation of this RNA. Public notifications will be made prior to and during the enforceable period of the area via Safety Marine Information Broadcast.

Discussion of Rule

This RNA has been established to safeguard the maritime public during the crane offload operation. The offload evolution is tide and weather dependent and requires two separate 12-hour periods to complete. These operational periods will be on two separate days, with at least a 48 hour break in between, determined to be the most suitable for safety to adjust equipment used to conduct the offload operations. If circumstances dictate and other operational periods are required, public notification will be made to the local maritime community through Local Notice to Mariners and Safety Broadcast Notice to Mariners.

Due to the complexity and danger of the crane offload operation the Reserved Channel will be closed to those vessels that do not routinely conduct business within the Reserved Channel or maintain a permanent mooring that requires access through the channel. Deep-draft vessels not currently scheduled to call upon Conley terminal or Black Falcon terminal, properties owned by Massport, from September 20, 2010 thru November 15, 2010, must coordinate arrival schedules with Massport as soon as possible and prior to authorization into the Reserved Channel. Vessels transiting the RNA must do so at such a speed as to maintain bare steerage or not cause a wake. Vessels transiting the Reserved Channel must also maintain a minimum distance of 100 yards in all directions from the barge CHICAGO BRIDGE.

The barge must be moored perpendicular to Conley terminal for offload, thus partially blocking the entrance to the Reserved Channel to deep-draft vessels. The offload will be coordinated around the dynamic schedules of surrounding deep-draft vessels to provide for limited disruption to the maritime industry. Prior to the offload of the cranes, the Coast Guard will be provided with proposed dates and times for approval, which will determine the RNA enforcement period. The RNA enforcement period will be announced via Safety Marine Information Broadcast. There will be a picket vessel within the RNA to provide notice of the RNA as well as to control vessel speed, vessel access to the Reserved Channel and to prevent any vessel not involved in the crane offload evolution from approaching to within 100 yards of the barge CHICAGO BRIDGE.

Regulatory Analyses

We developed this rule after considering numerous statutes and executive orders related to rulemaking. Below we summarize our analyses based on 13 of these statutes or executive orders.

Regulatory Planning and Review

This rule is not a significant regulatory action under section 3(f) of Executive Order 12866, Regulatory Planning and Review, and does not require an assessment of potential costs and benefits under section 6(a)(3) of that Order. The Office of Management and Budget has not reviewed it under that Order.

The Coast Guard has determined that this rule is not a significant regulatory action for the following reasons: The RNA will be of limited duration, it covers only a small portion of the navigable waterway and vessel traffic can still transit within the RNA but at slow speed so as not to create a wake that would disrupt offload operations.

Small Entities

Under the Regulatory Flexibility Act (5 U.S.C. 601–612), we have considered whether this rule would have a significant economic impact on a substantial number of small entities. The term "small entities" comprises small businesses, not-for-profit organizations that are independently owned and operated and are not dominant in their fields, and governmental jurisdictions with populations of less than 50,000.

The Coast Guard certifies under 5 U.S.C. 605(b) that this rule will not have a significant economic impact on a substantial number of small entities for the following reasons. This rule will be enforced only for two 12-hour periods, vessels will be able to continue to use the Boston Inner Harbor and the waters surrounding the Boston Marine Industrial Marine Park at such a speed as to maintain bare steerage or not cause a wake, and those vessels that routinely use the Reserved Channel will be able to continue to do so by passing safely around the barge CHICAGO BRIDGE at a minimum distance of 100 yards and at such a speed as to not cause a wake or maintain bare steerage. Before and during the enforcement periods, we will issue maritime advisories to users of Boston Harbor via the on-scene picket vessel as well as through Safety Marine Information Broadcasts.

Assistance for Small Entities

Under section 213(a) of the Small Business Regulatory Enforcement Fairness Act of 1996 (Pub. L. 104–121), we offer to assist small entities in understanding the rule so that they can better evaluate its effects on them and participate in the rulemaking process.

Small businesses may send comments on the actions of Federal employees who enforce, or otherwise determine compliance with, Federal regulations to the Small Business and Agriculture Regulatory Enforcement Ombudsman and the Regional Small Business Regulatory Fairness Boards. The Ombudsman evaluates these actions annually and rates each agency's responsiveness to small business. If you wish to comment on actions by employees of the Coast Guard, call 1–888–REG–FAIR (1–888–734–3247). The Coast Guard will not retaliate against small entities that question or complain about this rule or any policy or action of the Coast Guard.

Collection of Information

This rule calls for no new collection of information under the Paperwork Reduction Act of 1995 (44 U.S.C. 3501–3520).

Federalism

A rule has implications for federalism under Executive Order 13132, Federalism, if it has a substantial direct effect on State or local governments and would either preempt State law or impose a substantial direct cost of compliance on them. We have analyzed this rule under that Order and have determined that it does not have implications for federalism.

Unfunded Mandates Reform Act

The Unfunded Mandates Reform Act of 1995 (2 U.S.C. 1531–1538) requires Federal agencies to assess the effects of their discretionary regulatory actions. In particular, the Act addresses actions that may result in the expenditure by a State, local, or Tribal government, in the aggregate, or by the private sector of $100,000,000 (adjusted for inflation) or more in any one year. Though this rule will not result in such an expenditure, we do discuss the effects of this rule elsewhere in this preamble.

Taking of Private Property

This rule will not cause a taking of private property or otherwise have taking implications under Executive Order 12630, Governmental Actions and Interference with Constitutionally Protected Property Rights.

Civil Justice Reform

This rule meets applicable standards in sections 3(a) and 3(b)(2) of Executive Order 12988, Civil Justice Reform, to minimize litigation, eliminate ambiguity, and reduce burden.

Protection of Children

We have analyzed this rule under Executive Order 13045, Protection of Children from Environmental Health Risks and Safety Risks. This rule is not an economically significant rule and does not create an environmental risk to health or risk to safety that may disproportionately affect children.

Indian Tribal Governments

This rule does not have Tribal implications under Executive Order 13175, Consultation and Coordination with Indian Tribal Governments, because it does not have a substantial direct effect on one or more Indian Tribes, on the relationship between the Federal Government and Indian Tribes, or on the distribution of power and responsibilities between the Federal Government and Indian Tribes.

Energy Effects

We have analyzed this rule under Executive Order 13211, Actions Concerning Regulations That Significantly Affect Energy Supply, Distribution, or Use. We have determined that it is not a "significant energy action" under that order because it is not a "significant regulatory action" under Executive Order 12866 and is not likely to have a significant adverse effect on the supply, distribution, or use of energy. The Administrator of the Office of Information and Regulatory Affairs has not designated it as a significant energy action. Therefore, it does not require a Statement of Energy Effects under Executive Order 13211.

Technical Standards

The National Technology Transfer and Advancement Act (NTTAA) (15 U.S.C. 272 note) directs agencies to use voluntary consensus standards in their regulatory activities unless the agency provides Congress, through the Office of Management and Budget, with an explanation of why using these standards would be inconsistent with applicable law or otherwise impractical. Voluntary consensus standards are technical standards (*e.g.,* specifications of materials, performance, design, or operation; test methods; sampling procedures; and related management systems practices) that are developed or adopted by voluntary consensus standards bodies.

This rule does not use technical standards. Therefore, we did not consider the use of voluntary consensus standards.

Environment

We have analyzed this rule under Department of Homeland Security Management Directive 023–01 and Commandant Instruction M16475.lD, which guide the Coast Guard in complying with the National Environmental Policy Act of 1969 (NEPA) (42 U.S.C. 4321–4370f), and have concluded this action is one of a category of actions that do not individually or cumulatively have a significant effect on the human environment. This rule is categorically excluded, under figure 2–1, paragraph (34)(g), of the Instruction as this rule involves establishing a temporary RNA.

An environmental analysis checklist and a categorical exclusion determination will be available in the docket where indicated under **ADDRESSES**.

List of Subjects in 33 CFR Part 165

Harbors, Marine safety, Navigation (water), Reporting and recordkeeping requirements, Security measures and Waterways.

■ For the reasons discussed in the preamble, the Coast Guard amends 33 CFR part 165 as follows:

PART 165—REGULATED NAVIGATION AREAS AND LIMITED ACCESS AREAS

■ 1. The authority citation for part 165 continues to read as follows:

Authority: 33 U.S.C. 1226, 1231; 46 U.S.C. Chapter 701, 3306, 3703; 50 U.S.C. 191, 195; 33 CFR 1.05–1, 6.04–1, 6.04–6, and 160.5; Pub. L. 107–295, 116 Stat. 2064; Department of Homeland Security Delegation No. 0170.1.

■ 2. Add § 165.T01–0886 to read as follows:

§ 165.T01–0886 Regulated Navigation Areas: Reserved Channel, Boston Harbor, Boston, MA

(a) *Location.* The following areas are Regulated Navigation Areas (RNAs):

(1) All waters of the Reserved Channel, the Boston Marine Industrial Park and that portion of Boston Inner Harbor south of a line running from the North Jetty, at position 42°20′49″ N, 71°01′23.6″ W, to Boston Main Channel Lighted Buoy 12 (LLNR 10920), and west of a line running from Boston Main Channel Lighted buoy 12 to Boston Main Channel Lighted buoy 8 (LLNR 10905), and north of a line running from Boston Main Channel Lighted buoy 8 to Castle Island at position 42°20′21.1″ N, 71°00′35.1″ W.

(2) Boston Harbor, Boston, Massachusetts, from surface to bottom while barge CHICAGO BRIDGE is involved in offload operations.

(b) *Effective Period.* This rule is effective from September 20, 2010, thru November 15, 2010.

(c) *Enforcement Period.* This rule will be enforced during two separate 12-hour operational periods to be announced no less than 24 hours in advance via a Safety Marine Information Broadcast. If circumstances dictate and other operational periods are required, public notification will be made to the local maritime community through Local Notice to Mariners and Safety Broadcast Notice to Mariners.

(d) *Definition.* As used in this section, "authorized representative" means a Coast Guard Patrol Commander, including a Coast Guard coxswain, petty officer, or other officer operating a Coast Guard vessel or a Federal, State, or local officer designated by or assisting the COTP.

(e) *Regulations.* The following restrictions apply to the two 12-hour operational periods during which the RNA will be enforced:

(1) Vessels must transit through the RNA at such a speed as to not cause a wake or maintain bare steerage;

(2) Vessels that do not routinely conduct business within the Reserved Channel or maintain a permanent mooring which requires access through the Reserved Channel are not authorized within that portion of the RNA that lies within the Reserved Channel;

(3) Deep-draft vessels not currently scheduled to call upon Conley terminal or Black Falcon terminal from September 20, 2010 thru November 15, 2010 must coordinate arrival schedules with the Massachusetts Port Authority as soon as possible and prior to

authorization into that portion of the RNA that lies within the Reserved Channel; and

(4) Vessels allowed to transit the Reserved Channel must maintain a minimum distance of 100 yards in all directions from barge CHICAGO BRIDGE.

Dated: September 17, 2010.

Daniel A. Neptun,

Rear Admiral, U.S. Coast Guard, Commander, First Coast Guard District.

[FR Doc. 2010–24773 Filed 10–1–10; 8:45 am]

BILLING CODE 9110–04–P

DEPARTMENT OF HOMELAND SECURITY

Coast Guard

33 CFR Part 165

[Docket No. USCG–2010–0821]

RIN 1625–AA87

Security Zones; Captain of the Port Buffalo Zone; Technical Amendment

AGENCY: Coast Guard, DHS.

ACTION: Final rule.

SUMMARY: The Coast Guard is revising the contact information for Marine Safety Detachment Massena in the regulation establishing the process for getting permission to transit the security zones at Moses-Saunders Nuclear Power Dam, and Long Sault Spillway Dam. This action is necessary because the telephone number is incorrect, and this action will ensure the ability of persons or vessels to gain permission to transit these areas.

DATES: This rule is effective October 4, 2010.

ADDRESSES: Documents indicated in this preamble as being available in the docket are part of docket USCG–2010–0821 and are available online by going to *http://www.regulations.gov,* inserting USCG–2010–0821 in the "Keyword" box, and then clicking "Search." They are also available for inspection or copying at the Docket Management Facility (M–30), U.S. Department of Transportation, West Building Ground Floor, Room W12–140, 1200 New Jersey Avenue, SE., Washington, DC 20590, between 9 a.m. and 5 p.m., Monday through Friday, except Federal holidays.

FOR FURTHER INFORMATION CONTACT: If you have questions on this rule, call or e-mail MSSD2 John Maurer, Marine Safety Detachment Massena, Coast Guard; telephone (315) 769–5483, e-mail *John.A.Maurer@uscg.mil.* If you have questions on viewing the docket, call Renee V. Wright, Program Manager, Docket Operations, telephone 202–366–9826.

SUPPLEMENTARY INFORMATION:

Regulatory Information

The Coast Guard is issuing this final rule without prior notice and opportunity to comment pursuant to authority under section 4(a) of the Administrative Procedure Act (APA) (5 U.S.C. 553(b)). This provision authorizes an agency to issue a rule without prior notice and opportunity to comment when the agency for good cause finds that those procedures are "impracticable, unnecessary, or contrary to the public interest." Under 5 U.S.C. 553(b)(B), the Coast Guard finds that good cause exists for not publishing a notice of proposed rulemaking (NPRM) with respect to this rule because notice and comment is unnecessary. This rule is minor and merely technical in nature in that it simply amends a telephone number for the point of contact at Marine Safety Detachment Massena.

Under 5 U.S.C. 553(d)(3), the Coast Guard finds that good cause exists for making this rule effective less than 30 days after publication in the **Federal Register**. Good cause exists because delaying the effective date is unnecessary. This rule is minor and merely technical in nature in that it simply amends a telephone number for the point of contact at Marine Safety Detachment Massena.

Background and Purpose

The Captain of the Port Buffalo has previously established a security zone in the vicinity of Moses-Saunders Power Dam and the Long Sault Spillway Dam. This security zone exists in 33 CFR 165.911. Persons desiring to transit the area of the Moses-Saunders Power Dam and the Long Sault Spillway Dam must contact the Supervisor, Marine Safety Detachment Massena. Currently, 33 CFR 165.911 provides an incorrect telephone number for the Supervisor, Marine Safety Detachment Massena.

Discussion of Rule

The Captain of the Port Buffalo is publishing this final rule to correct the telephone number currently published in 33 CFR 165.911 for the Supervisor, Marine Safety Detachment Massena. This correction is necessary so that the public may contact the appropriate Coast Guard office to receive permission to transit the security zones in the area of the Moses-Saunders Power Dam and the Long Sault Spillway Dam.

Regulatory Analyses

We developed this rule after considering numerous statutes and executive orders related to rulemaking. Below we summarize our analyses based on 13 of these statutes or executive orders.

Regulatory Planning and Review

This rule is not a significant regulatory action under section 3(f) of Executive Order 12866, Regulatory Planning and Review, and does not require an assessment of potential costs and benefits under section 6(a)(3) of that Order. The Office of Management and Budget has not reviewed it under that Order.

The Coast Guard determined that this rule is not a significant regulatory action because it is only a correction of the contact information in the previous rule, not a substantive change of the regulation.

Small Entities

Under the Regulatory Flexibility Act (5 U.S.C. 601–612), we have considered whether this rule would have a significant economic impact on a substantial number of small entities. The term "small entities" comprises small businesses, not-for-profit organizations that are independently owned and operated and are not dominant in their fields, and governmental jurisdictions with populations of less than 50,000.

The Coast Guard certifies under 5 U.S.C. 605(b) that this rule will not have a significant economic impact on a substantial number of small entities. This rule will have no effect on small entities because it is purely minor and technical in nature in that it merely corrects the telephone number for the point of contact at Marine Safety Detachment Massena.

Assistance for Small Entities

Under section 213(a) of the Small Business Regulatory Enforcement Fairness Act of 1996 (Pub. L. 104–121), we offer to assist small entities in understanding the rule so that they can better evaluate its effects on them and participate in the rulemaking process.

Small businesses may send comments on the actions of Federal employees who enforce, or otherwise determine compliance with, Federal regulations to the Small Business and Agriculture Regulatory Enforcement Ombudsman and the Regional Small Business Regulatory Fairness Boards. The Ombudsman evaluates these actions annually and rates each agency's responsiveness to small business. If you wish to comment on actions by

employees of the Coast Guard, call 1–888–REG–FAIR (1–888–734–3247). The Coast Guard will not retaliate against small entities that question or complain about this rule or any policy or action of the Coast Guard.

Collection of Information

This rule calls for no new collection of information under the Paperwork Reduction Act of 1995 (44 U.S.C. 3501–3520).

Federalism

A rule has implications for federalism under Executive Order 13132, Federalism, if it has a substantial direct effect on State or local governments and would either preempt State law or impose a substantial direct cost of compliance on them. We have analyzed this rule under that Order and have determined that it does not have implications for federalism.

Unfunded Mandates Reform Act

The Unfunded Mandates Reform Act of 1995 (2 U.S.C. 1531–1538) requires Federal agencies to assess the effects of their discretionary regulatory actions. In particular, the Act addresses actions that may result in the expenditure by a State, local, or tribal government, in the aggregate, or by the private sector of $100,000,000 (adjusted for inflation) or more in any one year. Though this rule will not result in such an expenditure, we do discuss the effects of this rule elsewhere in this preamble.

Taking of Private Property

This rule will not cause a taking of private property or otherwise have taking implications under Executive Order 12630, Governmental Actions and Interference with Constitutionally Protected Property Rights.

Civil Justice Reform

This rule meets applicable standards in sections 3(a) and 3(b)(2) of Executive Order 12988, Civil Justice Reform, to minimize litigation, eliminate ambiguity, and reduce burden.

Protection of Children

We have analyzed this rule under Executive Order 13045, Protection of Children from Environmental Health Risks and Safety Risks. This rule is not an economically significant rule and does not create an environmental risk to health or risk to safety that may disproportionately affect children.

Indian Tribal Governments

This rule does not have tribal implications under Executive Order 13175, Consultation and Coordination with Indian Tribal Governments, because it does not have a substantial direct effect on one or more Indian tribes, on the relationship between the Federal Government and Indian tribes, or on the distribution of power and responsibilities between the Federal Government and Indian tribes.

Energy Effects

We have analyzed this rule under Executive Order 13211, Actions Concerning Regulations That Significantly Affect Energy Supply, Distribution, or Use. We have determined that it is not a "significant energy action" under that order because it is not a "significant regulatory action" under Executive Order 12866 and is not likely to have a significant adverse effect on the supply, distribution, or use of energy. The Administrator of the Office of Information and Regulatory Affairs has not designated it as a significant energy action. Therefore, it does not require a Statement of Energy Effects under Executive Order 13211.

Technical Standards

The National Technology Transfer and Advancement Act (NTTAA) (15 U.S.C. 272 note) directs agencies to use voluntary consensus standards in their regulatory activities unless the agency provides Congress, through the Office of Management and Budget, with an explanation of why using these standards would be inconsistent with applicable law or otherwise impractical. Voluntary consensus standards are technical standards (*e.g.,* specifications of materials, performance, design, or operation; test methods; sampling procedures; and related management systems practices) that are developed or adopted by voluntary consensus standards bodies.

This rule does not use technical standards. Therefore, we did not consider the use of voluntary consensus standards.

Environment

We have analyzed this rule under Department of Homeland Security Management Directive 023–01 and Commandant Instruction M16475.lD, which guide the Coast Guard in complying with the National Environmental Policy Act of 1969 (NEPA) (42 U.S.C. 4321–4370f), and have concluded this action is one of a category of actions that do not individually or cumulatively have a significant effect on the human environment. This rule is categorically excluded, under figure 2–1, paragraph (34)(a), of the Instruction. This rule involves an editorial revision to a regulation to update a telephone number. An environmental analysis checklist and a categorical exclusion determination are available in the docket where indicated under **ADDRESSES**.

List of Subjects in 33 CFR Part 165

Harbors, Marine safety, Navigation (water), Reporting and record keeping requirements, Security measures, Waterways.

■ For the reasons discussed in the preamble, the Coast Guard amends 33 CFR part 165 as follows:

PART 165—REGULATED NAVIGATION AREAS AND LIMITED ACCESS AREAS

■ 1. The authority citation for part 165 continues to read as follows:

Authority: 33 U.S.C. 1226, 1231; 46 U.S.C. Chapters 701, 3306, 3703; 50 U.S.C. 191, 195; 33 CFR 1.05–1, 6.04–1, 6.04–6, and 160.5; Pub. L. 107–295, 116 Stat. 2064; Department of Homeland Security Delegation No. 0170.1.

■ 2. In § 165.911, revise paragraph (b)(2) to read as follows:

§ 165.911 Security Zones; Captain of the Port Buffalo Zone.

* * * * *

(b) * * *

(2) Persons or vessels desiring to transit the area of the Nine Mile Point and Fitzpatrick Nuclear Power Plants or Ginna Nuclear Power Plant security zones must contact the Captain of Port Buffalo at telephone number (716) 843–9570, or on VHF/FM channel 16 to seek permission to transit the area. Persons desiring to transit the area of Moses-Saunders Power Dam or Long Sault Spillway Dam security zones must contact the Supervisor, Marine Safety Detachment Massena at telephone number (315) 769–5483, or on VHF/FM channel 16 to seek permission to transit the area. If permission is granted, all persons and vessels shall comply with the instructions of the Captain of the Port or his or her designated representative.

* * * * *

Dated: September 16, 2010.

R.S. Burchell,

Captain, U.S. Coast Guard, Captain of the Port Buffalo.

[FR Doc. 2010–24774 Filed 10–1–10; 8:45 am]

BILLING CODE 9110–04–P

FEDERAL COMMUNICATIONS COMMISSION

47 CFR Part 79

[CG Docket No. 05–231; DA 10–253]

Closed Captioning of Video Programming

AGENCY: Federal Communications Commission.

ACTION: Final rule; waiver of requirements.

SUMMARY: In this document, the Commission, via the Consumer and Governmental Affairs Bureau (Bureau), waives in part the requirement that video programming distributors (VPDs) place contact information for the pursuit of immediate closed captioning concerns and the filing of closed captioning complaints in telephone directories. Some VPDs do not use telephone directories to communicate with the public, and therefore the Bureau waives the rule in such situations, *so long as* the VPD makes the contact information available on its Web site or on billing statements. The waiver thus balances the goal of ensuring that consumers are readily able to locate VPD contact information, with preventing unduly burdensome compliance with the telephone directories provisions for VPDs that do not use telephone directories to communicate with the public.

DATES: This document is October 4, 2010. The provision in 47 CFR 79.1(i)(1) and (2), published at 74 FR 1594, January 13, 2009, requiring video programming distributors to place contact information required by this section in local telephone directories is waived beginning February 19, 2010, for certain video programming distributors. FCC will publish a document in the **Federal Register** to lift the waiver.

FOR FURTHER INFORMATION CONTACT: Amelia Brown, Consumer and Governmental Affairs Bureau, Disability Rights Office at (202) 418–2799 (voice), (202) 418–7804 (TTY), or e-mail at *Amelia.Brown@fcc.gov*.

SUPPLEMENTARY INFORMATION: This is a summary of the Bureau's Order, DA 10–253, *Closed Captioning of Video Programming,* CG Docket No. 05–231, adopted February 16, 2010, and released February 16, 2010. The full text of DA 10–253 and copies of any subsequently filed documents in this matter will be available for public inspection and copying during regular business hours at the FCC Reference Information Center, Portals II, 445 12th Street, SW., Room CY–A257, Washington, DC 20554. DA 10–253 and copies of subsequently filed documents in this matter also may be purchased from the Commission's duplicating contractor at Portals II, 445 12th Street, SW., Room CY–B402, Washington, DC 20554. Customers may contact the Commission's duplicating contractor at its Web site *http://www.bcpiweb.com* or by calling 1–800–378–3160.

To request materials in accessible formats for people with disabilities (Braille, large print, electronic files, audio format), send an e-mail to *fcc504@fcc.gov* or call the Consumer and Governmental Affairs Bureau at (202) 418–0530 (voice) or (202) 418–0432 (TTY). DA 10–253 also can be downloaded in Word or Portable Document Format (PDF) at: *http://www.fcc.gov/cgb/dro/caption.html*.

Synopsis

1. On November 7, 2008, the Commission released *Closed Captioning of Video Programming, Closed Captioning Requirements for Digital Television Receivers,* CG Docket No. 05–231, ET Docket No. 99–254, Declaratory Ruling, Order, and Notice of Proposed Rulemaking, FCC 08–255, (*2008 Closed Captioning Order*), published at 74 FR 1594, January 13, 2009, which, among other things, requires VPDs to make available two types of contact information—information for the receipt and handling of immediate closed captioning concerns by consumers, and information for written closed captioning complaints. The Commission directed VPDs to include this information on their Web sites, if the VPD has a Web site, in telephone directories, and in billing statements, if the VPD issues billing statements to subscribers. DISH Network L.L.C., a national provider of direct broadcast satellite service, petitioned the Commission for relief from the obligation to place contact information in telephone directories, stating that it does not currently directly advertise or otherwise place commercial listings in local telephone directories, and does not have direct relationships with publishers of local telephone directories. DISH Network requested that the Bureau clarify that a VPD is not required to place advertisements or listings in telephone directories in order to provide closed captioning information if the VPD does not otherwise use telephone directories as a direct means of communicating with viewers.

2. Because the "clarification" that DISH Networks seeks does not appear to be supported by the language of the Commission's *2008 Closed Captioning Order,* the Bureau declines to make it. However, the Bureau finds good cause to grant a limited waiver of the telephone directories provisions of amended 47 CFR 79.1. While 47 CFR 79.1(i) is designed to ensure that consumers are readily able to locate contact information for the pursuit of immediate closed captioning concerns or the filing of closed captioning complaints, on balance the Bureau is persuaded that compliance with the telephone directories provisions could be unduly burdensome where a company does not already use telephone directories, particularly for a nationwide company such as DISH Network. Therefore, the Bureau waives amended 47 CFR 79.1 to the extent that it requires VPDs to place the required contact information in local telephone directories in which the VPD does not itself directly advertise or otherwise place commercial listings, *so long as* the VPD makes the contact information available on its Web site or in billing statements.

3. For purposes of this waiver, the Bureau defines commercial listing to include any paid advertisement or other paid listing. This might include, for example, a paid expanded listing that contains more than merely name, location, and telephone number, or a listing in a larger, bolded, or highlighted font as compared to the standard listing, or the listing of a toll free (rather than local) number. In instances where a VPD has already contracted for a paid advertisement or other paid listing, DISH Network's concern that it would have to establish new relationships with directory publishers is inapplicable, and there is therefore no reason to waive the telephone directory requirement in such situations.

Congressional Review Act (*CRA*)

On December 5, 2008, OMB concurred that the Order adopting 47 CFR 79.1(i), document FCC 08–255, published at 74 FR 1594, January 13, 2009, was a non-major action pursuant to the *CRA*. Document DA 10–253 merely waives a specific provision of 47 CFR 79.1(i) and, as such, is not subject to the *CRA*.

Ordering Clause

Pursuant to sections 4(i) and 713 of the Communications Act of 1934, as amended, 47 U.S.C. 154(i) and 613, 47 CFR 1.3, and the authority delegated pursuant to 47 CFR 0.141 and 0.361, 47 CFR 79.1 (i)(1) and (i)(2) *is waived* to the extent described herein.

Federal Communications Commission.

Mark Stone,

Deputy Chief, Consumer and Governmental Affairs Bureau.

[FR Doc. 2010–22530 Filed 10–1–10; 8:45 am]

BILLING CODE 6712–01–P

DEPARTMENT OF COMMERCE

National Oceanic and Atmospheric Administration

50 CFR Part 660

[Docket No. 090428799–9802–01]

RIN 0648–BA28

Magnuson-Stevens Act Provisions; Fisheries Off West Coast States; Pacific Coast Groundfish Fishery; Inseason Adjustments to Fishery Management Measures

AGENCY: National Marine Fisheries Service (NMFS), National Oceanic and Atmospheric Administration (NOAA), Commerce.

ACTION: Final rule; inseason adjustments to biennial groundfish management measures; request for comments.

SUMMARY: This final rule makes inseason adjustments to commercial fishery management measures for several groundfish species taken in the U.S. exclusive economic zone (EEZ) off the coasts of Washington, Oregon, and California. These actions, which are authorized by the Pacific Coast Groundfish Fishery Management Plan (FMP), are intended to allow fisheries to access more abundant groundfish stocks while protecting overfished and depleted stocks and to prevent exceeding 2010 optimum yields.

DATES: Effective 0001 hours (local time) October 1, 2010. Comments on this final rule must be received no later than 5 p.m., local time on November 3, 2010.

ADDRESSES: You may submit comments, identified by RIN 0648–BA28, by any one of the following methods:

- *Electronic Submissions:* Submit all electronic public comments via the Federal eRulemaking Portal: *http://www.regulations.gov.*
- *Fax:* 206–526–6736, Attn: Gretchen Hanshew.
- *Mail:* William W. Stelle, Jr., Regional Administrator, Northwest Region, NMFS, 7600 Sand Point Way, NE., Seattle, WA 98115–0070, *Attn:* Gretchen Hanshew.

Instructions: No comments will be posted for public viewing until after the comment period has closed. All comments received are a part of the public record and will generally be posted to *http://www.regulations.gov* without change. All Personal Identifying Information (for example, name, address, etc.) voluntarily submitted by the commenter may be publicly accessible. Do not submit Confidential Business Information or otherwise sensitive or protected information.

NMFS will accept anonymous comments (enter N/A in the required fields, if you wish to remain anonymous). You may submit attachments to electronic comments in Microsoft Word, Excel, WordPerfect, or Adobe PDF file formats only.

FOR FURTHER INFORMATION CONTACT: Gretchen Hanshew (Northwest Region, NMFS), 206–526–6147, *fax:* 206–526–6736, *gretchen.hanshew@noaa.gov.*

SUPPLEMENTARY INFORMATION:

Electronic Access

This final rule is accessible via the Internet at the Office of the Federal Register's Web site at *http://www.gpoaccess.gov/fr/index.html.* Background information and documents are available at the Pacific Fishery Management Council's (the Council or PFMC) Web site at *http://www.pcouncil.org/.*

Background

On December 31, 2008, NMFS published a proposed rule to implement the 2009–2010 specifications and management measures for the Pacific Coast groundfish fishery (73 FR 80516). The final rule to implement the 2009–2010 specifications and management measures for the Pacific Coast Groundfish Fishery was published on March 6, 2009 (74 FR 9874). This final rule was subsequently amended by inseason actions on April 27, 2009 (74 FR 19011), July 6, 2009 (74 FR 31874), October 28, 2009 (74 FR 55468), February 26, 2010 (75 FR 8820), May 4, 2010 (75 FR 23620), July 1, 2010 (75 FR 38030), July 16, 2010 (75 FR 41386), and August 23, 2010 (75 FR 51684). Additional changes to the 2009–2010 specifications and management measures for petrale sole were made in two final rules: on November 4, 2009 (74 FR 57117), and December 10, 2009 (74 FR 65480). NMFS issued a final rule in response to a duly issued court order on July 8, 2010 (75 FR 39178). These specifications and management measures are at 50 CFR part 660, subpart G.

Changes to the groundfish management measures implemented by this action were recommended by the Council, in consultation with Pacific Coast Treaty Indian Tribes and the States of Washington, Oregon, and California, at its September 10–16, 2010, meeting in Boise, Idaho. The Council recommended adjusting the groundfish management measures to respond to updated fishery information and other inseason management needs. These changes include increases to bi-monthly cumulative limits in the limited entry trawl commercial fisheries off Washington, Oregon, and California and reductions to daily trip limits (DTL) for sablefish in the limited entry fixed gear and open access commercial fisheries south of 36° N. lat. The increases to cumulative limits are intended to allow additional harvest opportunities for species for which catch estimates through the end of the year are lower than anticipated. The changes to sablefish DTL limits are intended to prevent higher than anticipated sablefish catches from exceeding the 2010 sablefish optimum yield (OY).

Limited Entry Non-Whiting Trawl Fishery

At their September 2010 meeting, the Council received new data and analyses on the catch of groundfish in the limited entry trawl fishery.

Catches of several trawl target species were tracking behind 2010 projections made at the Council's June 2010 meeting, or were projected to be below the 2010 OYs if no adjustments to cumulative limits are made. At their September meeting, the Council considered the most recently available data from the Pacific Fishery Information Network (PacFIN). These data, dated August 18, 2010, indicated the total catch projections through the end of the year for sablefish, longspine thornyheads, shortspine thornyheads, Dover sole, arrowtooth flounder, slope rockfish and other flatfish were lower than anticipated.

The Council considered modest increases to bi-monthly cumulative limits for these species for which the catch is projected to be lower than anticipated in order to meet the Pacific Coast Groundfish FMP objective of achieving, to the extent possible, but not exceeding, OYs of target species. A two-month limit can be raised in the middle of the period, therefore, this increase would become effective during the two-month cumulative limit, on October 1.

Based on the considerations outlined above, the Council recommended and NMFS is implementing the following changes to cumulative limits in the limited entry non-whiting trawl fishery on October 1, 2010 through the end of the year: increase the sablefish trip limits taken with large and small footrope gear North of 40°10′ N. lat. and for all trawl gears South of 40°10′ N. lat.

from "21,000 lb per 2 months" to "24,000 lb per 2 months", and taken with selective flatfish trawl gear North of 40°10′ N. lat. from "9,000 lb per 2 months" to "10,000 lb per 2 months"; increase the longspine thornyhead trip limits taken with large and small footrope gear from "24,000 lb per 2 months" to "26,000 lb per 2 months" coastwide; increase the shortspine thornyhead trip limits taken with large and small footrope gear from "18,000 lb per 2 months" to "20,000 lb per 2 months" coastwide,; increase the Dover sole trip limits taken with large and small footrope gear North of 40°10′ N. lat. and for all trawl gears South of 40°10′ N. lat. from "100,000 lb per 2 months" to "110,000 lb per 2 months", and taken with selective flatfish trawl gears from "65,000 lb per 2 months" to "70,000 lb per 2 months" in the north, beginning on October 1 through the end of the year; increase the arrowtooth flounder trip limits taken with large and small footrope gear North of 40°10′ N. lat. from "150,000 lb per 2 months" to "180,000 lb per 2 months" and taken with selective flatfish trawl gear from "90,000 lb per 2 months" to "100,000 lb per 2 months"; increase the arrowtooth flounder trip limits taken with all trawl gears South of 40°10′ N. lat. from "10,000 lb per 2 months" to "12,000 lb per 2 months"; increase the other flatfish trip limits taken with large and small footrope gear North of 40°10′ N. lat. and all trawl gears South of 40°10′ N. lat. from "100,000 lb per 2 months" to "110,000 lb per 2 months", and taken with selective flatfish trawl gear in the north from "60,000 lb per 2 months" to "70,000 lb per 2 months"; increase the slope rockfish trip limits in the north from "2,000 lb per 2 months" to "4,000 lb per 2 months". This rule also makes changes to the trip limits for vessels that use multiple types of bottom trawl gears, simultaneously or successively, during a single cumulative limit period. Vessels that use multiple bottom trawl gears are subject to the most restrictive limit, and in most cases this is the trip limit for vessels using selective flatfish trawl gear. Therefore, if trip limits for vessels using selective flatfish trawl gear are modified, the trip limits for vessels using multiple trawl gears will also be modified accordingly.

Sablefish Daily Trip Limit Fishery South of 36° N. Lat.

Catch of sablefish in the limited entry fixed gear and open access daily trip limit (DTL) fisheries south of 36° N. lat. has been higher than anticipated. Based on the most recent fishery information, if no action is taken and catch remains higher than expected, landings of sablefish through the end of the year would be 1,825 mt. This level of catch would exceed the 2010 sablefish OY for the area south of 36° N. lat. of 1,258 mt by approximately 45 percent. The Council considered several combinations of trip limit reductions in the limited entry fixed gear and open access sablefish DTL fisheries south of 36° N. lat. to allow the fisheries to remain open through the remainder of 2010, while preventing the 2010 sablefish OY for the area south of 36° N. lat. from being exceeded.

Sablefish landings from March through July 2010 were much higher in these fisheries than during that same period in 2009, which had the same trip limits and RCA structure. Therefore, it is most likely that increased participation, particularly new entrants in the open access sector of the non-trawl commercial fishery, has been the primary cause of the higher than expected catches. Therefore, the Council considered larger restrictions to trip limits in the open access sablefish DTL fishery. Modest decreases were also considered for the limited entry fixed gear fishery, to further reduce projected impacts and to prevent the open access fishery from having to be closed entirely to prevent exceeding the 2010 sablefish OY. With these trip limit reductions, projected impacts are not anticipated to exceed 2010 sablefish OY for the area south of 36° N. lat. of 1,258 mt.

Projected impacts to overfished species in the limited entry fixed gear and open access fisheries are calculated assuming the entire sablefish OY is harvested. Therefore, decreases to trip limits to prevent exceeding the 2010 sablefish OY do not result in changes to anticipated impacts to co-occurring overfished groundfish species.

Based on the considerations outlined above, the Council recommended and NMFS is implementing a decrease in the limited entry fixed gear sablefish DTL fishery cumulative limits south of 36° N. lat. from "3,000 lb per week" to "2,800 lb per week" beginning on October 1, 2010 through the end of the year.

Based on the considerations outlined above, the Council recommended and NMFS is implementing restrictions to the open access sablefish DTL fishery trip limits South of 36° N. lat. from "400 lb per day, or 1 landing per week of up to 2,500 lb" to "800 lb per week, not to exceed 1,600 lb per month" beginning on October 1, 2010 through the end of the year.

Classification

This rule makes routine inseason adjustments to groundfish fishery management measures based on the best available information and is taken pursuant to the regulations implementing the Pacific Coast Groundfish FMP.

These actions are taken under the authority of 50 CFR 660.370(c) and are exempt from review under Executive Order 12866.

These inseason adjustments are taken under the authority of the Magnuson-Stevens Fishery Conservation and Management Act (Magnuson-Stevens Act), and are in accordance with 50 CFR part 660, the regulations implementing the FMP. These actions are based on the most recent data available. The aggregate data upon which these actions are based are available for public inspection at the Office of the Administrator, Northwest Region, NMFS, (*see* **ADDRESSES**) during business hours.

For the following reasons, NMFS finds good cause to waive prior public notice and comment on the revisions to groundfish management measures under 5 U.S.C. 553(b)(B) because notice and comment would be impracticable and contrary to the public interest. Also, for the same reasons, NMFS finds good cause to waive the 30-day delay in effectiveness pursuant to 5 U.S.C. 553(d)(3), so that this final rule may become effective as quickly as possible.

The recently available data upon which these recommendations were based was provided to the Council, and the Council made its recommendations, at its September 10–16, 2010, meeting in Boise, Idaho. The Council recommended that these changes be implemented by October 1, 2010 or as quickly as possible. There was not sufficient time after that meeting to draft this document and undergo proposed and final rulemaking before these actions need to be in effect. For the actions to be implemented in this final rule, affording the time necessary for prior notice and opportunity for public comment would prevent the Agency from managing fisheries using the best available science to approach, without exceeding, the OYs for federally managed species in accordance with the FMP and applicable laws. The adjustments to management measures in this document affect commercial fisheries off Washington, Oregon, and California.

The adjustments to management measures in the limited entry trawl fishery must be implemented in a timely manner to allow fishermen an opportunity to achieve the 2010 OYs specified for limited entry trawl for sablefish, longspine and shortspine thornyheads, Dover sole, arrowtooth flounder, other flatfish, and slope

rockfish. Increases are necessary to relieve a restriction by allowing fishermen increased opportunities to harvest available healthy stocks while staying within the OYs for all species. These changes must be implemented in a timely manner, as quickly as possible, so that fishermen are allowed increased opportunities to harvest available healthy stocks and meet the objective of the Pacific Coast Groundfish FMP to allow fisheries to approach, but not exceed, OYs. It would be contrary to the public interest to wait to implement these changes until after public notice and comment, because making this regulatory change quickly allows additional harvest in fisheries that are important to coastal communities.

Restrictions to cumulative limits in the limited entry fixed gear and open access sablefish DTL fishery are needed to prevent the 2010 sablefish OY in the area South of 36° N. lat. from being exceeded and prevent premature closure of fisheries that take sablefish. These changes must be implemented in a timely manner by October 1, 2010. Failure to implement trip limit restrictions by October 1, 2010 would risk premature closure of fisheries that are important to coastal communities, which would fail to meet the objectives of the Pacific Coast Groundfish FMP to allow for year round fishing opportunities to provide community stability.

These revisions are needed to keep the harvest of groundfish species within the harvest levels projected for 2010, while allowing fishermen access to healthy stocks. Without these measures in place, the fisheries could risk exceeding harvest levels, causing early and unanticipated fishery closures and economic harm to fishing communities. Delaying these changes would keep management measures in place that are not based on the best available data and that could lead to early closures of the fishery if harvest of groundfish exceeds levels projected for 2010. Such delay would impair achievement of one of the Pacific Coast Groundfish FMP objectives of providing for year-round harvest opportunities or extending fishing opportunities as long as practicable during the fishing year.

List of Subjects in 50 CFR Part 660

Fisheries, Fishing, Indian Fisheries.

Dated: September 28, 2010.

Emily H. Menashes,

Acting Director, Office of Sustainable Fisheries, National Marine Fisheries Service.

■ For the reasons set out in the preamble, 50 CFR part 660 is amended as follows:

PART 660—FISHERIES OFF WEST COAST STATES

■ 1. The authority citation for part 660 continues to read as follows:

Authority: 16 U.S.C. 1801 *et seq.*

■ 2. Tables 3 (North) and 3 (South), Table 4 (South), and Table 5 (South) to part 660, subpart G, are revised to read as follows:

BILLING CODE 3510–22–P

Table 3 (North) to Part 660, Subpart G -- 2010 Trip Limits for Limited Entry Trawl Gear North of 40°10' N. Lat.

Other Limits and Requirements Apply -- Read § 660.301 - § 660.399 before using this table

10012010

		JAN-FEB	MAR-APR	MAY-JUN	JUL-AUG	SEP-OCT	NOV-DEC
	Rockfish Conservation Area (RCA)[6/]:						
1	North of 48°10' N. lat.	shore - modified[7/] 200 fm line[6/]	shore - 200 fm line[6/]	shore - 150 fm line[6/]		shore - 200 fm line[6/]	shore - modified[7/] 200 fm line[6/]
2	48°10' N. lat. - 45°46' N. lat.	75 fm line[6/] - modified[7/] 200 fm line[6/]	75 fm line[6/] - 200 fm line[6/]	75 fm line[6/] - 150 fm line[6/]	100 fm line[6/] - 150 fm line[6/]	75 fm line[6/] - 200 fm line[6/]	75 fm line[6/] - modified[7/] 200 fm line[6/]
3	45°46' N. lat. - 40°10' N. lat.			75 fm line[6/] - 200 fm line[6/]	100 fm line[6/] - 200 fm line[6/]		
	Selective flatfish trawl gear is required shoreward of the RCA; all trawl gear (large footrope, selective flatfish trawl, and small footrope trawl gear) is permitted seaward of the RCA. Large footrope and small footrope trawl gears (except for selective flatfish trawl gear) are prohibited shoreward of the RCA. Midwater trawl gear is permitted only for vessels participating in the primary whiting season.						
	See § 660.370 and § 660.381 for Additional Gear, Trip Limit, and Conservation Area Requirements and Restrictions. See §§ 660.390-660.394 and §§ 660.396-660.399 for Conservation Area Descriptions and Coordinates (including RCAs, YRCA, CCAs, Farallon Islands, Cordell Banks, and EFHCAs).						
	State trip limits and seasons may be more restrictive than federal trip limits, particularly in waters off Oregon and California.						
4	**Minor slope rockfish[2/] & Darkblotched rockfish**	6,000 lb/ 2 months		2,000 lb/ 2 months		4,000 lb/ 2 months	
5	**Pacific ocean perch**	1,500 lb/ 2 months					
6	**DTS complex**						
7	Sablefish						
8	large & small footrope gear	20,000 lb/ 2 months		24,000 lb/ 2 months	21,000 lb/ 2 months	24,000 lb/ 2 months	
9	selective flatfish trawl gear	9,000 lb/ 2 months				10,000 lb/ 2 months	
10	multiple bottom trawl gear[8/]	9,000 lb/ 2 months				10,000 lb/ 2 months	
11	Longspine thornyhead						
12	large & small footrope gear	24,000 lb/ 2 months				26,000 lb/ 2 months	
13	selective flatfish trawl gear	5,000 lb/ 2 months					
14	multiple bottom trawl gear[8/]	5,000 lb/ 2 months					
15	Shortspine thornyhead						
16	large & small footrope gear	18,000 lb/ 2 months				20,000 lb/ 2 months	
17	selective flatfish trawl gear	5,000 lb/ 2 months					
18	multiple bottom trawl gear[8/]	5,000 lb/ 2 months					
19	Dover sole						
20	large & small footrope gear	110,000 lb/ 2 months			100,000 lb/ 2 months	110,000 lb/ 2 months	
21	selective flatfish trawl gear	65,000 lb/ 2 months				70,000 lb/ 2 months	
22	multiple bottom trawl gear[8/]	65,000 lb/ 2 months				70,000 lb/ 2 months	

TABLE 3 (North)

Table 3 (North). Continued

		JAN-FEB	MAR-APR	MAY-JUN	JUL-AUG	SEP-OCT	NOV-DEC
23	**Whiting**						
24	midwater trawl	Before the primary whiting season: CLOSED. -- During the primary season: mid-water trawl permitted in the RCA. See §660.373 for season and trip limit details. -- After the primary whiting season: CLOSED.					
25	large & small footrope gear	Before the primary whiting season: 20,000 lb/trip. -- During the primary season: 10,000 lb/trip. -- After the primary whiting season: 10,000 lb/trip.					
26	**Flatfish** (except Dover sole)						
27	Arrowtooth flounder						
28	large & small footrope gear	150,000 lb/ 2 months				180,000 lb/ 2 months	
29	selective flatfish trawl gear	90,000 lb/ 2 months				100,000 lb/ 2 months	
30	multiple bottom trawl gear [8/]	90,000 lb/ 2 months				100,000 lb/ 2 months	
31	Other flatfish [3/], English sole, starry flounder, & Petrale sole						
32	large & small footrope gear for Other flatfish[3/], English sole, & starry flounder	110,000 lb/ 2 months	110,000 lb/ 2 months, no more than 9,500 lb/ 2 months of which may be petrale sole.		100,000 lb/ 2 months, no more than 6,300 lb/ 2 months of which may be petrale sole.	110,000 lb/ 2 months, no more than 6,300 lb/ 2 months of which may be petrale sole.	110,000 lb/ 2 months
33	large & small footrope gear for Petrale sole	9,500 lb/ 2 months					6,300 lb/ 2 months
34	selective flatfish trawl gear for Other flatfish[3/], English sole, & starry flounder	90,000 lb/ 2 months, no more than 9,500 lb/ 2 months of which may be petrale sole.	60,000 lb/ 2 months, no more than 9,500 lb/ 2 months of which may be petrale sole.		60,000 lb/ 2 months, no more than 6,300 lb/ 2 months of which may be petrale sole.	70,000 lb/ 2 months, no more than 6,300 lb/ 2 months of which may be petrale sole.	
35	selective flatfish trawl gear for Petrale sole						
36	multiple bottom trawl gear [8/]	90,000 lb/ 2 months, no more than 9,500 lb/ 2 months of which may be petrale sole.	60,000 lb/ 2 months, no more than 9,500 lb/ 2 months of which may be petrale sole.		60,000 lb/ 2 months, no more than 6,300 lb/ 2 months of which may be petrale sole.	70,000 lb/ 2 months, no more than 6,300 lb/ 2 months of which may be petrale sole.	
37	**Minor shelf rockfish[1/], Shortbelly, Widow & Yelloweye rockfish**						
38	midwater trawl for Widow rockfish	Before the primary whiting season: CLOSED. -- During primary whiting season: In trips of at least 10,000 lb of whiting, combined widow and yellowtail limit of 500 lb/ trip, cumulative widow limit of 1,500 lb/ month. Mid-water trawl permitted in the RCA. See §660.373 for primary whiting season and trip limit details. -- After the primary whiting season: CLOSED.					
39	large & small footrope gear	300 lb/ 2 months					
40	selective flatfish trawl gear	300 lb/ month		1,000 lb/ month, no more than 200 lb/ month of which may be yelloweye rockfish			300 lb/ month
41	multiple bottom trawl gear [8/]	300 lb/ month		300 lb/ 2 months, no more than 200 lb/ month of which may be yelloweye rockfish			300 lb/ month

TABLE 3 (North) con't

Table 3 (North). Continued

		JAN-FEB	MAR-APR	MAY-JUN	JUL-AUG	SEP-OCT	NOV-DEC
42	**Canary rockfish**						
43	large & small footrope gear	CLOSED					
44	selective flatfish trawl gear	100 lb/ month		300 lb/ month		100 lb/ month	
45	multiple bottom trawl gear 8/	CLOSED					
46	**Yellowtail**						
47	midwater trawl	Before the primary whiting season: CLOSED. -- During primary whiting season: In trips of at least 10,000 lb of whiting: combined widow and yellowtail limit of 500 lb/ trip, cumulative yellowtail limit of 2,000 lb/ month. Mid-water trawl permitted in the RCA. See §660.373 for primary whiting season and trip limit details. -- After the primary whiting season: CLOSED.					
48	large & small footrope gear	300 lb/ 2 months					
49	selective flatfish trawl gear	2,000 lb/ 2 months					
50	multiple bottom trawl gear 8/	300 lb/ 2 months					
51	**Minor nearshore rockfish & Black rockfish**						
52	large & small footrope gear	CLOSED					
53	selective flatfish trawl gear	300 lb/ month					
54	multiple bottom trawl gear 8/	CLOSED					
55	**Lingcod** 4/						
56	large & small footrope gear	1,200 lb/ 2 months		4,000 lb/ 2 months			
57	selective flatfish trawl gear			1,200 lb/2 months			
58	multiple bottom trawl gear 8/						
59	**Pacific cod**	30,000 lb/ 2 months		70,000 lb/ 2 months			30,000 lb/ 2 months
60	**Spiny dogfish**	200,000 lb/ 2 months		150,000 lb/ 2 months	100,000 lb/ 2 months		
61	**Other Fish** 5/	Not limited					

TABLE 3 (North) con't

1/ Bocaccio, chilipepper and cowcod are included in the trip limits for minor shelf rockfish.
2/ Splitnose rockfish is included in the trip limits for minor slope rockfish.
3/ "Other flatfish" are defined at § 660.302 and include butter sole, curlfin sole, flathead sole, Pacific sanddab, rex sole, rock sole, and sand sole.
4/ The minimum size limit for lingcod is 22 inches (56 cm) total length North of 42° N. lat. and 24 inches (61 cm) total length South of 42° N. lat.
5/ "Other fish" are defined at § 660.302 and include sharks, skates (including longnose skate), ratfish, morids, grenadiers, and kelp greenling. Cabezon is included in the trip limits for "other fish."
6/ The Rockfish Conservation Area is an area closed to fishing by particular gear types, bounded by lines specifically defined by latitude and longitude coordinates set out at §§ 660.391-660.394. This RCA is not defined by depth contours, and the boundary lines that define the RCA may close areas that are deeper or shallower than the depth contour. Vessels that are subject to the RCA restrictions may not fish in the RCA, or operate in the RCA for any purpose other than transiting.
7/ The "modified" fathom lines are modified to exclude certain petrale sole areas from the RCA.
8/ If a vessel has both selective flatfish gear and large or small footrope gear on board during a cumulative limit period (either simultaneously or successively), the most restrictive cumulative limit for any gear on board during the cumulative limit period applies for the entire cumulative limit period.

To convert pounds to kilograms, divide by 2.20462, the number of pounds in one kilogram.

Table 3 (South) to Part 660, Subpart G -- 2010 Trip Limits for Limited Entry Trawl Gear South of 40°10' N. Lat.

Other Limits and Requirements Apply -- Read § 660.301 - § 660.399 before using this table

10012010

		JAN-FEB	MAR-APR	MAY-JUN	JUL-AUG	SEP-OCT	NOV-DEC
	Rockfish Conservation Area (RCA)[6/]:						
1	South of 40°10' N. lat.	100 fm line[6/] - 150 fm line [6/ 7/]					
All trawl gear (large footrope, selective flatfish trawl, midwater trawl, and small footrope trawl gear) is permitted seaward of the RCA. Large footrope trawl gear and midwater trawl gear are prohibited shoreward of the RCA.							
See § 660.370 and § 660.381 for Additional Gear, Trip Limit, and Conservation Area Requirements and Restrictions. See §§ 660.390-660.394 and §§ 660.396-660.399 for Conservation Area Descriptions and Coordinates (including RCAs, YRCA, CCAs, Farallon Islands, Cordell Banks, and EFHCAs).							
State trip limits and seasons may be more restrictive than federal trip limits, particularly in waters off Oregon and California.							
2	**Minor slope rockfish[2/] & Darkblotched rockfish**						
3	40°10' - 38° N. lat.	15,000 lb/ 2 months					
4	South of 38° N. lat.	55,000 lb/ 2 months					
5	**Splitnose**						
6	40°10' - 38° N. lat.	15,000 lb/ 2 months					
7	South of 38° N. lat.	55,000 lb/ 2 months					
8	**DTS complex**						
9	Sablefish	22,000 lb/ 2 months			21,000 lb/ 2 months	24,000 lb/ 2 months	
10	Longspine thornyhead	24,000 lb/ 2 months				26,000 lb/ 2 months	
11	Shortspine thornyhead	18,000 lb/ 2 months				20,000 lb/ 2 months	
12	Dover sole	110,000 lb/ 2 months			100,000 lb/ 2 months	110,000 lb/ 2 months	
13	**Flatfish** (except Dover sole)						
14	Other flatfish[3/], English sole, & starry flounder	110,000 lb/ 2 months	110,000 lb/ 2 months, no more than 9,500 lb/ 2 months of which may be petrale sole.		100,000 lb/ 2 months, no more than 6,300 lb/ 2 months of which may be petrale sole.	110,000 lb/ 2 months, no more than 6,300 lb/ 2 months of which may be petrale sole.	110,000 lb/ 2 months
15	Petrale sole	9,500 lb/ 2 months					6,300 lb/ 2 months
16	Arrowtooth flounder	10,000 lb/ 2 months				12,000 lb/ 2 months	
17	**Whiting**						
18	midwater trawl	Before the primary whiting season: CLOSED. -- During the primary season: mid-water trawl permitted in the RCA. See §660.373 for season and trip limit details. -- After the primary whiting season: CLOSED.					
19	large & small footrope gear	Before the primary whiting season: 20,000 lb/trip. -- During the primary season: 10,000 lb/trip. -- After the primary whiting season: 10,000 lb/trip.					

TABLE 3 (South)

Table 3 (South). Continued

		JAN-FEB	MAR-APR	MAY-JUN	JUL-AUG	SEP-OCT	NOV-DEC
20	**Minor shelf rockfish[1/], Chilipepper, Shortbelly, Widow, & Yelloweye rockfish**						
21	large footrope or midwater trawl for Minor shelf rockfish & Shortbelly	300 lb/ month					
22	large footrope or midwater trawl for Chilipepper	12,000 lb/ 2 months			17,000 lb/ 2 months		
23	large footrope or midwater trawl for Widow & Yelloweye	CLOSED					
24	small footrope trawl for Minor Shelf, Shortbelly, Widow & Yelloweye	300 lb/ month					
25	small footrope trawl for Chilipepper	12,000 lb/ 2 months			17,000 lb/ 2 months		
26	**Bocaccio**						
27	large footrope or midwater trawl	300 lb/ 2 months					
28	small footrope trawl	CLOSED					
29	**Canary rockfish**						
30	large footrope or midwater trawl	CLOSED					
31	small footrope trawl	100 lb/ month		300 lb/ month		100 lb/ month	
32	**Cowcod**	CLOSED					
33	**Bronzespotted rockfish**	CLOSED					
34	**Minor nearshore rockfish & Black rockfish**						
35	large footrope or midwater trawl	CLOSED					
36	small footrope trawl	300 lb/ month					
37	**Lingcod[4/]**						
38	large footrope or midwater trawl	1,200 lb/ 2 months		4,000 lb/ 2 months			
39	small footrope trawl			1,200 lb/ 2 months			
40	**Pacific cod**	30,000 lb/ 2 months		70,000 lb/ 2 months			30,000 lb/ 2 months
41	**Spiny dogfish**	200,000 lb/ 2 months		150,000 lb/ 2 months	100,000 lb/ 2 months		
42	**Other Fish[5/] & Cabezon**	Not limited					

TABLE 3 (South) con't

1/ Yellowtail is included in the trip limits for minor shelf rockfish. Bronzespotted rockfish have a species specific trip limit.
2/ POP is included in the trip limits for minor slope rockfish
3/ "Other flatfish" are defined at § 660.302 and include butter sole, curlfin sole, flathead sole, Pacific sanddab, rex sole, rock sole, and sand sole.
4/ The minimum size limit for lingcod is 24 inches (61 cm) total length South of 42° N. lat.
5/ Other fish are defined at § 660.302 and include sharks, skates (including longnose skate), ratfish, morids, grenadiers, and kelp greenling.
6/ The Rockfish Conservation Area is an area closed to fishing by particulary gear types, bounded by lines specifically defined by latitude and longitude coordinates set out at §§ 660.391-660.394. This RCA is not defined by depth contours, and the boundary lines that define the RCA may close areas that are deeper or shallower than the depth contour. Vessels that are subject to the RCA restrictions may not fish in the RCA, or operate in the RCA for any purpose other than transiting.
7/ South of 34°27' N. lat., the RCA is 100 fm line - 150 fm line along the mainland coast; shoreline - 150 fm line around islands.
To convert pounds to kilograms, divide by 2.20462, the number of pounds in one kilogram.

Table 4 (South) to Part 660, Subpart G -- 2009-2010 Trip Limits for Limited Entry Fixed Gear South of 40°10' N. Lat.

Other Limits and Requirements Apply -- Read § 660.301 - § 660.399 before using this table 10012010

		JAN-FEB	MAR-APR	MAY-JUN	JUL-AUG	SEP-OCT	NOV-DEC
	Rockfish Conservation Area (RCA)[5/]:						
1	40°10' - 34°27' N. lat.	30 fm line[5/] - 150 fm line[5/]					
2	South of 34°27' N. lat.	60 fm line[5/] - 150 fm line[5/] (also applies around islands)					
	See § 660.370 and § 660.382 for Additional Gear, Trip Limit, and Conservation Area Requirements and Restrictions. See §§ 660.390-660.394 and §§ 660.396-660.399 for Conservation Area Descriptions and Coordinates (including RCAs, YRCA, CCAs, Farallon Islands, Cordell Banks, and EFHCAs).						
	State trip limits and seasons may be more restrictive than federal trip limits, particularly in waters off Oregon and California.						
3	**Minor slope rockfish[2/] & Darkblotched rockfish**	40,000 lb/ 2 months					
4	**Splitnose**	40,000 lb/ 2 months					
5	**Sablefish**						
6	40°10' - 36° N. lat.	1,750 lb per week, not to exceed 7,000 lb/ 2 months			1,750 lb per week, not to exceed 8,500 lb/ 2 months		1,750 lb per week, not to exceed 8,000 lb/ 2 months
7	South of 36° N. lat.	400 lb/ day, or 1 landing per week of up to 1,500 lb				3,000 lb/ week	2,800 lb per week
8	**Longspine thornyhead**	10,000 lb / 2 months					
9	**Shortspine thornyhead**						
10	40°10' - 34°27' N. lat.	2,000 lb/ 2 months					
11	South of 34°27' N. lat.	3,000 lb/ 2 months					
12	**Dover sole**	5,000 lb/ month South of 42° N. lat., when fishing for "other flatfish," vessels using hook-and-line gear with no more than 12 hooks per line, using hooks no larger than "Number 2" hooks, which measure 11 mm (0.44 inches) point to shank, and up to two 1 lb (0.45 kg) weights per line are not subject to the RCAs.					
13	**Arrowtooth flounder**						
14	**Petrale sole**						
15	**English sole**						
16	**Starry flounder**						
17	**Other flatfish[1/]**						
18	**Whiting**	10,000 lb/ trip					
19	**Minor shelf rockfish[2/], Shortbelly, Widow rockfish, and Bocaccio (including Chilipepper between 40°10' - 34°27' N. lat.)**						
20	40°10' - 34°27' N. lat.	Minor shelf rockfish, shortbelly, widow rockfish, bocaccio & chilipepper: 2,500 lb/ 2 months, of which no more than 500 lb/ 2 months may be any species other than chilipepper.					
21	South of 34°27' N. lat.	3,000 lb/ 2 months	CLOSED	3,000 lb/ 2 months			
22	**Chilipepper rockfish**						
23	40°10' - 34°27' N. lat.	Chilipepper included under minor shelf rockfish, shortbelly, widow and bocaccio limits - - See above					
24	South of 34°27' N. lat.	2,000 lb/ 2 months, this opportunity only available seaward of the nontrawl RCA					
25	**Canary rockfish**	CLOSED					
26	**Yelloweye rockfish**	CLOSED					
27	**Cowcod**	CLOSED					
28	**Bronzespotted rockfish**	CLOSED					

TABLE 4 (South)

Table 4 (South). Continued

		JAN-FEB	MAR-APR	MAY-JUN	JUL-AUG	SEP-OCT	NOV-DEC	
29	**Bocaccio**							
30	40°10' - 34°27' N. lat.	Bocaccio included under Minor shelf rockfish, shortbelly, widow & chilipepper limits -- See above						
31	South of 34°27' N. lat.	300 lb/ 2 months	CLOSED	300 lb/ 2 months				
32	**Minor nearshore rockfish & Black rockfish**							
33	Shallow nearshore	600 lb/ 2 months	CLOSED	800 lb/ 2 months	900 lb/ 2 months	800 lb/ 2 months	600 lb/ 2 months	
34	Deeper nearshore							
35	40°10' - 34°27' N. lat.	700 lb/ 2 months	CLOSED	700 lb/ 2 months		800 lb/ 2 months		
36	South of 34°27' N. lat.	500 lb/ 2 months		600 lb/ 2 months				
37	California scorpionfish	600 lb/ 2 months	CLOSED	600 lb/ 2 months	1,200 lb/ 2 months			
38	**Lingcod**[3/]	CLOSED		800 lb/ 2 months			400 lb/ month	CLOSED
39	**Pacific cod**	1,000 lb/ 2 months						
40	**Spiny dogfish**	200,000 lb/ 2 months		150,000 lb/ 2 months	100,000 lb/ 2 months			
41	**Other fish**[4/] **& Cabezon**	Not limited						

TABLE 4 (South)

1/ "Other flatfish" are defined at § 660.302 and include butter sole, curlfin sole, flathead sole, Pacific sanddab, rex sole, rock sole, and sand sole.

2/ POP is included in the trip limits for minor slope rockfish. Yellowtail is included in the trip limits for minor shelf rockfish. Bronzespotted rockfish have a species specific trip limit.

3/ The minimum size limit for lingcod is 24 inches (61 cm) total length South of 42° N. lat.

4/ "Other fish" are defined at § 660.302 and include sharks, skates (including longnose skates), ratfish, morids, grenadiers, and kelp greenling.

5/ The Rockfish Conservation Area is an area closed to fishing by particular gear types, bounded by lines specifically defined by latitude and longitude coordinates set out at §§ 660.391-660.394. This RCA is not defined by depth contours (with the exception of the 20-fm depth contour boundary south of 42° N. lat.), and the boundary lines that define the RCA may close areas that are deeper or shallower than the depth contour. Vessels that are subject to RCA restrictions may not fish in the RCA, or operate in the RCA for any purpose other than transiting.

To convert pounds to kilograms, divide by 2.20462, the number of pounds in one kilogram.

Table 5 (South) to Part 660, Subpart G -- 2009-2010 Trip Limits for Open Access Gears South of 40°10' N. Lat.

Other Limits and Requirements Apply -- Read § 660.301 - § 660.399 before using this table 10012010

		JAN-FEB	MAR-APR	MAY-JUN	JUL-AUG	SEP-OCT	NOV-DEC
	Rockfish Conservation Area (RCA)[5/]:						
1	40°10' - 34°27' N. lat.	30 fm line[5/] - 150 fm line[5/]					
2	South of 34°27' N. lat.	60 fm line[5/] - 150 fm line[5/] (also applies around islands)					
	See § 660.370 and § 660.383 for Additional Gear, Trip Limit, and Conservation Area Requirements and Restrictions. See §§ 660.390-660.394 and §§ 660.396-660.399 for Conservation Area Descriptions and Coordinates (including RCAs, YRCA, CCAs, Farallon Islands, Cordell Banks, and EFHCAs).						
	State trip limits and seasons may be more restrictive than federal trip limits, particularly in waters off Oregon and California.						
3	**Minor slope rockfish[1/] & Darkblotched rockfish**						
4	40°10' - 38° N. lat.	Per trip, no more than 25% of weight of the sablefish landed					
5	South of 38° N. lat.	10,000 lb/ 2 months					
6	**Splitnose**	200 lb/ month					
7	**Sablefish**						
8	40°10' - 36° N. lat.	300 lb/ day, or 1 landing per week of up to 800 lb, not to exceed 2,400 lb/ 2 months			300 lb/ day, or 1 landing per week of up to 950 lb, not to exceed 2,750 lb/ 2 months		
9	South of 36° N. lat.	400 lb/ day, or 1 landing per week of up to 1,500 lb, not to exceed 8,000 lb/ 2 months				400 lb/ day, or 1 landing per week of up to 2,500 lb	800 lb/ week, not to exceed 1,600 lb/ month
10	**Thornyheads**						
11	40°10' - 34°27' N. lat.	CLOSED					
12	South of 34°27' N. lat.	50 lb/ day, no more than 1,000 lb/ 2 months					
13	**Dover sole**	3,000 lb/month, no more than 300 lb of which may be species other than Pacific sanddabs. South of 42° N. lat., when fishing for "other flatfish," vessels using hook-and-line gear with no more than 12 hooks per line, using hooks no larger than "Number 2" hooks, which measure 11 mm (0.44 inches) point to shank, and up to two 1 lb (0.45 kg) weights per line are not subject to the RCAs.					
14	**Arrowtooth flounder**						
15	**Petrale sole**						
16	**English sole**						
17	**Starry flounder**						
18	**Other flatfish[2/]**						
19	**Whiting**	300 lb/ month					
20	**Minor shelf rockfish[1/], Shortbelly, Widow & Chilipepper rockfish**						
21	40°10' - 34°27' N. lat.	300 lb/ 2 months	CLOSED		200 lb/ 2 months	300 lb/ 2 months	
22	South of 34°27' N. lat.	750 lb/ 2 months			750 lb/ 2 months		
23	**Canary rockfish**	CLOSED					
24	**Yelloweye rockfish**	CLOSED					
25	**Cowcod**	CLOSED					
26	**Bronzespotted rockfish**	CLOSED					
27	**Bocaccio**						
28	40°10' - 34°27' N. lat.	200 lb/ 2 months	CLOSED		100 lb/ 2 months	200 lb/ 2 months	
29	South of 34°27' N. lat.	100 lb/ 2 months			100 lb/ 2 months		

TABLE 5 (South)

Table 5 (South). Continued

		JAN-FEB	MAR-APR	MAY-JUN	JUL-AUG	SEP-OCT	NOV-DEC
30	**Minor nearshore rockfish & Black rockfish**						
31	Shallow nearshore	600 lb/ 2 months	CLOSED	800 lb/ 2 months	900 lb/ 2 months	800 lb/ 2 months	600 lb/ 2 months
32	Deeper nearshore						
33	40°10' - 34°27' N. lat.	700 lb/ 2 months	CLOSED	700 lb/ 2 months		800 lb/ 2 months	
34	South of 34°27' N. lat.	500 lb/ 2 months		600 lb/ 2 months			
35	California scorpionfish	600 lb/ 2 months	CLOSED	600 lb/ 2 months	1,200 lb/ 2 months		
36	**Lingcod[3/]**	CLOSED		400 lb/ month			CLOSED
37	**Pacific cod**	1,000 lb/ 2 months					
38	**Spiny dogfish**	200,000 lb/ 2 months		150,000 lb/ 2 months	100,000 lb/ 2 months		
39	**Other Fish[4/] & Cabezon**	Not limited					
40	**RIDGEBACK PRAWN AND, SOUTH OF 38°57.50' N. LAT., CA HALIBUT AND SEA CUCUMBER NON-GROUNDFISH TRAWL**						
41	**NON-GROUNDFISH TRAWL Rockfish Conservation Area (RCA) for CA Halibut, Sea Cucumber & Ridgeback Prawn:**						
42	40°10' - 38° N. lat.	100 fm - modified 200 fm 6/	100 fm - 150 fm				100 fm - modified 200 fm 6/
43	38° - 34°27' N. lat.	100 fm - 150 fm					
44	South of 34°27' N. lat.	100 fm - 150 fm along the mainland coast; shoreline - 150 fm around islands					
45		Groundfish: 300 lb/trip. Trip limits in this table also apply and are counted toward the 300 lb groundfish per trip limit. The amount of groundfish landed may not exceed the amount of the target species landed, except that the amount of spiny dogfish landed may exceed the amount of target species landed. Spiny dogfish are limited by the 300 lb/trip overall groundfish limit. The daily trip limits for sablefish coastwide and thornyheads south of Pt. Conception and the overall groundfish "per trip" limit may not be multiplied by the number of days of the trip. Vessels participating in the California halibut fishery south of 38°57.50' N. lat. are allowed to (1) land up to 100 lb/day of groundfish without the ratio requirement, provided that at least one California halibut is landed and (2) land up to 3,000 lb/month of flatfish, no more than 300 lb of which may be species other than Pacific sanddabs, sand sole, starry flounder, rock sole, curlfin sole, or California scorpionfish (California scorpionfish is also subject to the trip limits and closures in line 31).					
46	**PINK SHRIMP NON-GROUNDFISH TRAWL GEAR** *(not subject to RCAs)*						
47	South	**Effective April 1 - October 31:** Groundfish: 500 lb/day, multiplied by the number of days of the trip, not to exceed 1,500 lb/trip. The following sublimits also apply and are counted toward the overall 500 lb/day and 1,500 lb/trip groundfish limits: lingcod 300 lb/ month (minimum 24 inch size limit); sablefish 2,000 lb/ month; canary, thornyheads and yelloweye rockfish are PROHIBITED. All other groundfish species taken are managed under the overall 500 lb/day and 1,500 lb/trip groundfish limits. Landings of these species count toward the per day and per trip groundfish limits and do not have species-specific limits. The amount of groundfish landed may not exceed the amount of pink shrimp landed.					

TABLE 5 (South) con't

1/ Yellowtail rockfish is included in the trip limits for minor shelf rockfish. POP is included in the trip limits for minor slope rockfish. Bronzespotted rockfish have a species specific trip limit.
2/ "Other flatfish" are defined at § 660.302 and include butter sole, curlfin sole, flathead sole, Pacific sanddab, rex sole, rock sole, and sand sole.
3/ The size limit for lingcod is 24 inches (61 cm) total length South of 42° N. lat.
4/ "Other fish" are defined at § 660.302 and include sharks, skates (including longnose skates), ratfish, morids, grenadiers, and kelp greenling.
5/ The Rockfish Conservation Area is an area closed to fishing by particular gear types, bounded by lines specifically defined by latitude and longitude coordinates set out at §§ 660.391-660.394. This RCA is not defined by depth contours (with the exception of the 20-fm depth contour boundary south of 42° N. lat.), and the boundary lines that define the RCA may close areas that are deeper or shallower than the depth contour. Vessels that are subject to RCA restrictions may not fish in the RCA, or operate in the RCA for any purpose other than transiting.
6/ The "modified 200 fm" line is modified to exclude certain petrale sole areas from the RCA.
To convert pounds to kilograms, divide by 2.20462, the number of pounds in one kilogram.

[FR Doc. 2010–24821 Filed 10–1–10; 8:45 am]
BILLING CODE 3510–22–C

Proposed Rules

Federal Register
Vol. 75, No. 191
Monday, October 4, 2010

This section of the FEDERAL REGISTER contains notices to the public of the proposed issuance of rules and regulations. The purpose of these notices is to give interested persons an opportunity to participate in the rule making prior to the adoption of the final rules.

DEPARTMENT OF TRANSPORTATION

Federal Aviation Administration

14 CFR Part 39

[Docket No. FAA–2008–1165; Directorate Identifier 2008–NE–38–AD]

RIN 2120–AA64

Airworthiness Directives; Rolls-Royce plc RB211–Trent 800 Series Turbofan Engines

AGENCY: Federal Aviation Administration (FAA), DOT.

ACTION: Supplemental notice of proposed rulemaking (NPRM); reopening of comment period.

SUMMARY: This supplemental NPRM revises an earlier proposed airworthiness directive (AD) for the products listed above. This proposed AD results from mandatory continuing airworthiness information (MCAI) issued by an aviation authority of another country to identify and correct an unsafe condition on an aviation product. The MCAI describes the unsafe condition as:

> During manufacture of high-pressure (HP) compressor stage 1 discs, a small number of parts have been rejected due to a machining defect that was found during inspection. Analysis of the possibility of less severe examples having been undetected and passed into service has concluded that action is required to reduce the risk of failure. It was therefore necessary to reduce the life limit.

The HP compressor stage 1 disc is part of the HP compressor stage 1–4 shaft, part number (P/N) FK32580. We are proposing this AD to prevent failure of the HP compressor stage 1 disc, uncontained engine failure, and damage to the airplane.

DATES: We must receive comments on this proposed AD by November 18, 2010.

ADDRESSES: You may send comments by any of the following methods:

- *Federal eRulemaking Portal:* Go to *http://www.regulations.gov* and follow the instructions for sending your comments electronically.
- *Mail:* Docket Management Facility, U.S. Department of Transportation, 1200 New Jersey Avenue, SE., West Building Ground Floor, Room W12–140, Washington, DC 20590–0001.
- *Hand Delivery:* Deliver to Mail address above between 9 a.m. and 5 p.m., Monday through Friday, except Federal holidays.
- *Fax:* (202) 493–2251.

Contact Rolls-Royce plc, P.O. Box 31, Derby, England, DE248BJ; telephone: 011–44–1332–242424; fax: 011–44–1332–245418 for the service information identified in this proposed AD.

Examining the AD Docket

You may examine the AD docket on the Internet at *http://www.regulations.gov;* or in person at the Docket Operations office between 9 a.m. and 5 p.m., Monday through Friday, except Federal holidays. The AD docket contains this proposed AD, the regulatory evaluation, any comments received, and other information. The street address for the Docket Operations office (phone (800) 647–5527) is the same as the Mail address provided in the **ADDRESSES** section. Comments will be available in the AD docket shortly after receipt.

FOR FURTHER INFORMATION CONTACT: James Lawrence, Aerospace Engineer, Engine Certification Office, FAA, Engine & Propeller Directorate, 12 New England Executive Park, Burlington, MA 01803; e-mail: *james.lawrence@faa.gov;* telephone (781) 238–7176; fax (781) 238–7199.

SUPPLEMENTARY INFORMATION:

Comments Invited

We invite you to send any written relevant data, views, or arguments about this proposed AD. Send your comments to an address listed under the **ADDRESSES** section. Include "Docket No. FAA–2008–1165; Directorate Identifier 2008–NE–38–AD" at the beginning of your comments. We specifically invite comments on the overall regulatory, economic, environmental, and energy aspects of this proposed AD. We will consider all comments received by the closing date and may amend this proposed AD based on those comments.

We will post all comments we receive, without change, to *http://www.regulations.gov,* including any personal information you provide. We will also post a report summarizing each substantive verbal contact with FAA personnel concerning this proposed AD. Using the search function of the Web site, anyone can find and read the comments in any of our dockets, including, if provided, the name of the individual who sent the comment (or signed the comment on behalf of an association, business, labor union, *etc.*). You may review the DOT's complete Privacy Act Statement in the **Federal Register** published on April 11, 2000 (65 FR 19477–78).

Discussion

This supplemental NPRM revises an earlier proposed AD, for Rolls-Royce plc RB211–Trent 800 series turbofan engines. That proposed AD would have required removing HP compressor stage 1–4 shafts, P/N FK32580, from service at reduced life limits based on part assessment using either "Multiple Flight Profile Monitoring", or "Heavy Flight Profile" calculations. That proposed AD resulted from MCAI issued by an aviation authority of another country. This supplemental NPRM revises the proposed AD to correct certain life limits for the Heavy Flight Profile Parts. We are proposing this supplemental NPRM to prevent failure of the HP compressor stage 1 disc, uncontained engine failure, and damage to the airplane. The European Aviation Safety Agency (EASA), which is the Technical Agent for the Member States of the European Community, has issued MCAI AD 2010–0087, date May 5, 2010 (corrected, May 6, 2010), to correct an unsafe condition for the specified products. The MCAI states:

> During manufacture of high-pressure (HP) compressor stage 1 discs, a small number of parts have been rejected due to a machining defect that was found during inspection. Analysis of the possibility of less severe examples having been undetected and passed into service has concluded that action is required to reduce the risk of failure. It is therefore necessary to reduce the life limit.

Since we issued the original proposed AD on February 10, 2009 (74 FR 7563, February 18, 2009):

- EASA issued AD 2010–0087, dated May 5, 2010, and AD 2010–0087 (corrected May 6, 2010) to correct certain life limits for the Heavy Flight Profile Parts.

• EASA issued AD 2010–0087, dated May 5, 2010 (corrected May 6, 2010), which retains certain requirements of superseded EASA AD 2008–0099, and imposes more restrictive life limits in the Heavy Flight Profile Parts.

You may obtain further information by examining the MCAI in the AD docket.

Comments

We provided the public the opportunity to participate in the development of the original proposed AD. We considered the comments received.

NPRM Would Allow a Part To Go Beyond the Current Time Limits Manual (TLM) Limit

One commenter, Delta Airlines through the Airline Transport Association (ATA), states that the NPRM would require a 5,280 cycle life limit established in the long term for shafts that are used in the "Heavy Flight Profile". In the draw down period from the initial effective date, the NPRM would allow a shaft in the "Heavy Flight Profile" category to remain in service for up to 7,480 flight cycles in the worst case scenario. However, the existing TLM Section 05–10–01–800–802, Subtask 05–10–01–860–169 (dated March 15, 2008) states that the current declared life limit for HP compressor stage 1–4 shaft, P/N FK32580, is only 6,850 flight cycles. The NPRM would allow a part to go beyond the current TLM limit in the interim draw down period which seems to contradict the intent of the NPRM.

We agree. We changed the supplemental NPRM to use the correct life limit reduction.

Allow Later Approved Revisions of the Alert Service Bulletin (ASB) as Acceptable for Compliance

One commenter, American Airlines through the ATA, states that subsequent to the writing of the NPRM, Rolls-Royce plc published Revision 2 of ASB No. RB.211–72–AF825. The commenter requests that the AD should include language that allows later approved revisions of the ASB as acceptable for compliance.

We partially agree. We agree that our ADs should be as current and accurate as possible. We changed the AD to include the reference to ASB Revision 3 in the related information paragraph.

We disagree that the NPRM, or this supplemental NPRM, require the use of the ASB for compliance, or that we should permit an unknown future revision be used for compliance. Since we do not know the content of later documents like ASBs, we do not issue a regulation that mandates compliance with the unknown. We did not change the proposed AD to permit compliance to unknown future revisions.

Request To Change the Base-Lined Compliance Time in the AD

One commenter, Rolls-Royce plc, states that their SB compliance time is base-lined from May 1, 2008. The FAA NPRM is understood to permit the same cyclic draw down as the SB. However, the baseline date for the applicable draw down would be the issue date of the FAA AD. Rolls-Royce plc requests that we change the base-lined compliance time in the proposed AD to the compliance base line in the RR SB.

We do not agree. We cannot pre-date the compliance times in the proposed AD. We did not change the AD.

Differences Between This Proposed AD and the MCAI

We have reviewed the MCAI and, in general, agree with its substance. But we have found it necessary to not incorporate the June 4, 2008 compliance date which is in EASA AD 2010–0087, dated May 5, 2010 (corrected May 6, 2010). We updated the compliance times in the proposed AD based on a more recent assessment of the unsafe condition.

FAA's Determination and Requirements of This Proposed AD

This product has been approved by the aviation authority of the United Kingdom, and is approved for operation in the United States. Pursuant to our bilateral agreement with the United Kingdom, they have notified us of the unsafe condition described in the MCAI and service information referenced above. We are proposing this AD because we evaluated all information provided by EASA and determined the unsafe condition exists and is likely to exist or develop on other products of the same type design. This proposed AD requires removing HP compressor stage 1–4 shafts, P/N FK32580, from service at reduced life limits based on part assessment using either "Multiple Flight Profile Monitoring", or "Heavy Flight Profile" calculations.

Costs of Compliance

Based on the service information, we estimate that this proposed AD would affect about 78 products of U.S. registry. Required parts would cost about $15,095 per product. We estimate that no additional labor costs would be incurred to perform the proposed actions, as we anticipate that the removal from service of the HP compressor stage 1–4 shafts will occur while the engine is inducted into the shop for routine maintenance. Based on these figures, we estimate the cost of the proposed AD on U.S. operators to be $1,177,410.

Authority for This Rulemaking

Title 49 of the United States Code specifies the FAA's authority to issue rules on aviation safety. Subtitle I, section 106, describes the authority of the FAA Administrator. "Subtitle VII: Aviation Programs," describes in more detail the scope of the Agency's authority.

We are issuing this rulemaking under the authority described in "Subtitle VII, Part A, Subpart III, Section 44701: General requirements." Under that section, Congress charges the FAA with promoting safe flight of civil aircraft in air commerce by prescribing regulations for practices, methods, and procedures the Administrator finds necessary for safety in air commerce. This regulation is within the scope of that authority because it addresses an unsafe condition that is likely to exist or develop on products identified in this rulemaking action.

Regulatory Findings

We determined that this proposed AD would not have federalism implications under Executive Order 13132. This proposed AD would not have a substantial direct effect on the States, on the relationship between the national Government and the States, or on the distribution of power and responsibilities among the various levels of government.

For the reasons discussed above, I certify this proposed regulation:

1. Is not a "significant regulatory action" under Executive Order 12866;

2. Is not a "significant rule" under the DOT Regulatory Policies and Procedures (44 FR 11034, February 26, 1979); and

3. Will not have a significant economic impact, positive or negative, on a substantial number of small entities under the criteria of the Regulatory Flexibility Act.

We prepared a regulatory evaluation of the estimated costs to comply with this proposed AD and placed it in the AD docket.

List of Subjects in 14 CFR Part 39

Air transportation, Aircraft, Aviation safety, Safety.

The Proposed Amendment

Accordingly, under the authority delegated to me by the Administrator, the FAA proposes to amend 14 CFR part 39 as follows:

PART 39—AIRWORTHINESS DIRECTIVES

1. The authority citation for part 39 continues to read as follows:

Authority: 49 U.S.C. 106(g), 40113, 44701.

§ 39.13 [Amended]

2. The FAA amends § 39.13 by adding the following new AD:

Rolls-Royce plc: Docket No. FAA–2008–1165; Directorate Identifier 2008–NE–38–AD.

Comments Due Date

(a) We must receive comments by November 18, 2010.

Affected Airworthiness Directives (ADs)

(b) None.

Applicability

(c) This AD applies to Rolls-Royce plc (RR) models RB211–Trent 875–17, –Trent 877–17, –Trent 884–17, –Trent 884B–17, –Trent 892–17, –Trent 892B–17, and –Trent 895–17 turbofan engines, with high-pressure (HP) compressor stage 1–4 shafts, part number (P/N) FK32580, installed. These engines are installed on, but not limited to, Boeing 777 series airplanes.

Reason

(d) European Aviation Safety Agency (EASA) AD 2010–0087, dated May 5, 2010 (corrected May 6, 2010) states the unsafe condition is as follows:

During manufacture of high-pressure (HP) compressor stage 1 discs, a small number of parts have been rejected due to a machining defect that was found during inspection. Analysis of the possibility of less severe examples having been undetected and passed into service has concluded that action is required to reduce the risk of failure. It was therefore necessary to reduce the life limit.

The HP compressor stage 1 disc is part of the HP compressor stage 1–4 shaft, P/N FK32580. We are issuing this AD to prevent failure of the HP compressor stage 1 disc, uncontained engine failure, and damage to the airplane.

Actions and Compliance

(e) Unless already done, do the following actions.

Multiple Flight Profile Monitoring Parts

(1) For RB211–Trent 800 engines being monitored by "Multiple Flight Profile Monitoring," remove the HP compressor stage 1–4 shaft, P/N FK32580, before accumulating 5,580 standard duty cycles (SDC) since-new or within 960 SDC from the effective date of this AD, whichever occurs later.

Heavy Flight Profile Parts

(2) For RB211–Trent 800 engines being monitored by "Heavy Flight Profile," remove the HP compressor stage 1–4 shaft, P/N FK32580, before accumulating 5,280 flight cycles since new or within 860 flight cycles from the effective data of this AD, whichever occurs later.

FAA Differences

(f) We have found it necessary to not incorporate the June 4, 2008 compliance date which is in EASA AD 2010–0087, dated May 5, 2010 (corrected May 6, 2010). We also updated the compliance times in the AD based on a more recent assessment of the unsafe condition.

Alternative Methods of Compliance (AMOCs)

(g) The Manager, Engine Certification Office, FAA, has the authority to approve AMOCs for this AD, if requested using the procedures found in 14 CFR 39.19.

Related Information

(h) Refer to EASA Airworthiness Directive 2010–0087, dated May 5, 2010 (corrected May 6, 2010), and Rolls-Royce plc Alert Service Bulletin No. RB.211–72–AF825, Revision 3, dated August 25, 2009 for related information. Contact Rolls-Royce plc, P.O. Box 31, Derby, England, DE248BJ; telephone: 011–44–1332–242424; fax: 011–44–1332–245418, for a copy of this service information.

(i) Contact James Lawrence, Aerospace Engineer, Engine Certification Office, FAA, Engine & Propeller Directorate, 12 New England Executive Park, Burlington, MA 01803; e-mail: *james.lawrence@faa.gov;* telephone (781) 238–7176; fax (781) 238–7199, for more information about this AD.

Issued in Burlington, Massachusetts on September 27, 2010.

Peter A. White,

Assistant Manager, Engine and Propeller Directorate, Aircraft Certification Service.

[FR Doc. 2010–24745 Filed 10–1–10; 8:45 am]

BILLING CODE 4910–13–P

LIBRARY OF CONGRESS

Copyright Office

37 CFR Part 201

[Docket No. RM 2010–3]

Refunds Under the Cable Statutory License

AGENCY: Copyright Office, Library of Congress.

ACTION: Notice of Proposed Rulemaking.

SUMMARY: The Office seeks comment on whether a cable operator may receive refunds in situations where it has failed to pay for the carriage of distant signals on a system–wide basis under the Copyright Act, before it was amended to allow a cable system to calculate its royalty fees on a community–by–community basis.

DATES: Written comments must be received in the Office of the General Counsel of the Copyright Office no later than November 3, 2010. Reply comments must be received in the Office of the General Counsel of the Copyright Office no later than November 3, 2010.

ADDRESSES: If hand delivered by a private party, an original and five copies of a comment or reply comment should be brought to the Library of Congress, U.S. Copyright Office, Room 401, 101 Independence Avenue, SE, Washington, DC 20559, between 8:30 a.m. and 5 p.m. E.D.T. The envelope should be addressed as follows: Office of the General Counsel, U.S. Copyright Office. If delivered by a commercial courier, an original and five copies of a comment or reply comment must be delivered to the Congressional Courier Acceptance Site ("CCAS") located at 2nd and D Streets, NE, Washington, DC between 8:30 a.m. and 4 p.m. The envelope should be addressed as follows: Office of the General Counsel, U.S. Copyright Office, LM 403, James Madison Building, 101 Independence Avenue, SE, Washington, DC 20559. Please note that CCAS will not accept delivery by means of overnight delivery services such as Federal Express, United Parcel Service or DHL. If sent by mail (including overnight delivery using U.S. Postal Service Express Mail), an original and five copies of a comment or reply comment should be addressed to U.S. Copyright Office, Copyright GC/I&R, P.O. Box 70400, Washington, DC 20024.

FOR FURTHER INFORMATION CONTACT: Ben Golant, Assistant General Counsel, and Tanya M. Sandros, Deputy General Counsel, Copyright GC/I&R, P.O. Box 70400, Washington, DC 20024. Telephone: (202) 707–8380. Telefax: (202) 707–8366.

SUPPLEMENTARY INFORMATION: Section 111 of the Copyright Act ("Act"), title 17 of the United States Code ("Section 111"), provides cable operators with a statutory license to retransmit to the public a performance or display of a work embodied in a primary transmission made by a television station licensed by the Federal Communications Commission ("FCC"). Cable systems that retransmit broadcast signals in accordance with the provisions governing the statutory license set forth in Section 111 are required to pay royalty fees to the Copyright Office ("Office"). Payments made under the cable statutory license are remitted semi–annually to the Office which invests the royalties in United States Treasury securities pending distribution of these funds to those copyright owners who are entitled to receive a share of the fees. Section 111 was recently amended by the Satellite Television Extension and Localism Act of 2010 ("STELA"), Pub. L. No. 111–175,

which made some changes to the design of the royalty payment structure, as noted below.

Cable operators have long paid royalties for the retransmission of non–network programming carried by distant broadcast television signals under the Section 111 statutory license. The royalties are based on a percentage of gross receipts generated by a cable system. Under the licensing framework established by Congress in 1976, cable operators had to pay for the number of distant signals carried, even though some such signals were not received or made available to every subscriber of a particular cable system. Distant broadcast signals that were not made available on a system–wide basis, but on which operators were required to pay royalties, have been called "phantom signals." The Copyright Office has been aware of the phantom signal situation since at least 1983, *see* NCTA Petition for Issuance of Notice of Proposed Rulemaking (filed August 22, 1983), but the matter has only recently received legislative attention.

Section 104 of STELA, entitled "Modifications to Cable System Secondary Transmission Rights Under Section 111," directly addresses phantom signals. Specifically, it amends Section 111(d)(1) of the Copyright Act which sets forth the methodology for a cable operator to calculate royalty fees. Cable operators now pay royalty fees based on the communities where the distant broadcast signal is actually offered rather than on a broader cable system basis as had been the case since 1978.

Specifically, STELA amends subparagraph (C) of Section 111(d)(1) to state that if a cable system provides secondary transmissions of primary transmitters to some, but not all, communities served by the cable system, the gross receipts and distant signal equivalent values for each secondary transmission may be derived on the basis of the subscribers in those communities where the cable system actually provides such secondary transmission. Where a cable system calculates its royalties on a community–specific ("subscriber group") basis, the operator applies the methodology in Section 111(d)(1)(B)(ii)–(iv) to calculate a separate royalty for each subscriber group.

The legislation also amends subparagraph (D) of Section 111(d)(1) to state that:

> A cable system that, on a statement submitted before the date of the enactment of the Satellite Television Extension and Localism Act of 2010, computed its royalty fee consistent with the methodology under subparagraph (C)(iii), or that amends a statement filed before such date of enactment to compute the royalty fee due using such methodology, shall not be subject to an action for infringement, or eligible for any royalty refund or offset, arising out of its use of such methodology on such statement.

In other words, operators who have heretofore based royalty payments on subscriber group calculations will not face liability for having done so. The amendments also make clear that cable operators who have paid for phantom signals in the past are not entitled to now seek refunds or offsets for those payments in any Statement of Account period from 2010/1 onward. With regard to offsets, cable operators cannot deduct the amount they paid for a phantom signal prior to STELA (*e.g.*, 2009/1) from the royalties they must pay in future Statement of Account periods.

While STELA eliminates the possibility of an action for infringement against those cable systems that did not pay for the carriage of phantom signals historically, it did not alter how a cable system was to calculate its royalty fee obligation for carriage of these signals under Section 111 prior to the passage of this legislation. Nevertheless, certain cable systems have concluded that the language which prevents a copyright owner from bringing an infringement suit against a cable system which had computed its past royalty fee obligation in a manner consistent with the methodology in new Section 111(d)(1)(D) also nullifies their obligation to have paid for carriage of all signals on a system–wide basis for the accounting periods ending prior to January 1, 2010. This approach represents one interpretation of the effect of the new provision, but it is not the only one. A more literal reading of the new statutory language is that it only shields a cable system from an infringement action and that it does not erase a cable system's obligation to have paid for the carriage of each distant signal on a system–wide basis prior to the 2010/1 accounting period. Under the latter interpretation, any underpayment for carriage of a phantom signal still remains even though the operator cannot be sued for infringement under Section 111.

We raise this issue because some cable systems which, prior to the 2010/1 accounting period, did not pay for carriage of phantom signals are now requesting refunds in cases where there are other non–related issues. In these cases, the cable system is just now replying to a pending Licensing Division initiated letter and is requesting a refund for a reporting mistake, *e.g.*, identifying a local signal as a distant signal for the 2009/2 accounting period (or an earlier accounting period), even though, according to the Copyright Office's examination of the statement of account, the cable system still has an outstanding royalty fee obligation for the retransmission of a phantom signal during the same period.

At this time, the Office is not inclined to refund any fees for a non–phantom reporting error in the case where the operator has an outstanding balance owed for the carriage of a phantom signal without accounting for that obligation too because, prior to STELA, section 111 required that royalty fees be calculated on a system–wide basis. Moreover, the language in STELA protecting a cable system from an infringement suit for failure to make these payments prior to the 2010/1 accounting period does not address a cable system's past obligation to have paid the royalty fees owed by the cable system at the time it filed the statement of accounts. Historically, cable operators have been expected to pay for each distant signal on a system–wide basis and when that did not occur, the Office would write to the cable system noting the underpayment and record it as an outstanding obligation. Moreover, the Office would not provide a refund for an overpayment for misreporting a local signal as a distant signal or similar reporting error until the outstanding obligation for carriage of the phantom signal had been satisfied. Nothing in the legislation appears to have altered this approach. Nevertheless, in light of the requests from certain cable operators, we seek comment on whether to offset the outstanding balance owed for carriage of phantom signals before providing a refund for an error unrelated to phantom signals that occurred in an accounting period prior to 2010/1.

List of Subjects in 37 CFR 201

Copyright

Proposed Regulation

For the reasons set forth in the preamble, the Copyright Office proposes to amend part 201 of title 37 of the Code of Federal Regulations as follows:

PART 201 – GENERAL PROVISIONS

1. The authority citation for part 201 continues to read as follows:

Authority: 17 U.S.C. 702

2. Amend section 201.17 by redesignating paragraphs (m)(1) through (4) as paragraphs (m)(2) through (5) and adding a new paragraph (m)(1) to read as follows:

§ 201.17 Statements of Account covering compulsory licenses for secondary transmissions by cable systems.

* * * * *

(m) Corrections, supplemental payments and refunds.

(1) Royalty fee obligations under 17 U.S.C. 111 prior to the effective date of the Satellite Television Extension and Localism Act of 2010, Pub.L. No. 111–175 are determined based on carriage of each distant signal on a system–wide basis. Refunds for an overpayment of royalty fees for an accounting period prior to January 1, 2010, shall be made only when all outstanding royalty fee obligations have been met, including those for carriage of each distant signal on a system–wide basis.

* * * * *

Dated: September 28, 2010

Tanya Sandros,

Deputy General Counsel,

U.S. Copyright Office.

[FR Doc. 2010–24779 Filed 10–1–10; 8:45 am]

BILLING CODE 1410–30–S

Notices

Federal Register
Vol. 75, No. 191
Monday, October 4, 2010

This section of the FEDERAL REGISTER contains documents other than rules or proposed rules that are applicable to the public. Notices of hearings and investigations, committee meetings, agency decisions and rulings, delegations of authority, filing of petitions and applications and agency statements of organization and functions are examples of documents appearing in this section.

ADMINISTRATIVE CONFERENCE OF THE UNITED STATES

Notice of Public Meeting of the Committee on Regulation

AGENCY: Administrative Conference of the United States.

ACTION: Notice of meeting.

SUMMARY: Pursuant to the Federal Advisory Committee Act of 1972, notice is hereby given that the Administrative Conference of the United States will host a public meeting of the Committee on Regulation of the Assembly of the Conference on Tuesday, October 19, 2010 from 2 p.m. to 5 p.m. to consider a report examining agency procedures for determining whether to preempt state law. To facilitate public participation, the Administrative Conference is inviting public comment on the report to be considered at the meeting, to be submitted in writing no later than October 14, 2010.

DATES: Meeting to be held October 19, 2010. Comments must be received by October 14, 2010.

ADDRESSES: Meeting to be held at Administrative Conference of the United States, Suite 706 South, 1120 20th Street, NW., Washington, DC 20036. Submit comments to either of the following:

(1) *E-mail: Comments@acus.gov,* with "Preemption" in the subject line; or

(2) *Mail:* Preemption Comments, Administrative Conference of the United States, Suite 706 South, 1120 20th Street, NW., Washington, DC 20036.

FOR FURTHER INFORMATION CONTACT: Emily F. Schleicher, Designated Federal Officer, Administrative Conference of the United States, Suite 706 South, 1120 20th Street, NW., Washington, DC 20036; Telephone 202–480–2080.

SUPPLEMENTARY INFORMATION: The Administrative Conference of the United States (ACUS) is charged with developing recommendations for the improvement of Federal administrative procedures (5 U.S.C. 591). The objectives of these recommendations are to ensure that private rights may be fully protected and regulatory activities and other Federal responsibilities may be carried out expeditiously in the public interest, to promote more effective public participation and efficiency in the rulemaking process, to reduce unnecessary litigation in the regulatory process, to improve the use of science in the regulatory process, and to improve the effectiveness of laws applicable to the regulatory process.

The Conference has engaged a Professor of Law at New York University School of Law, Catherine M. Sharkey, to research and prepare a report regarding the best practices of federal agencies in obtaining input from state and local governments and other procedures for determining whether to preempt state law (the "Preemption Report"). A copy of the Preemption Report will be available at *http://www.acus.gov*. The Committee on Regulation has been tasked with reviewing this report and developing recommendations for consideration by the Assembly of the Conference.

From 2 p.m. to 5 p.m. on October 19, 2010, the Committee on Regulation will hold a meeting to consider the Preemption Report and formulate appropriate recommendations in response thereto. This meeting will be open to the public and may end prior to 5 p.m. if business is concluded prior to that time. Members of the public are invited to attend the meeting in person, subject to space limitations, and the Conference will also provide remote public access to the meeting.

Anyone who wishes to attend the meeting in person is asked to RSVP to *Comments@acus.gov*. Remote access information will be posted on the Conference's Web site, *http://www.acus.gov,* by no later than October 15, 2010, and will also be available by the same date by calling the phone number listed above. Members of the public who attend the Committee's meeting may be permitted to speak only at the discretion of the Committee Chair, with unanimous approval of the Committee. The Conference welcomes the attendance of the public and will make every effort to accommodate persons with physical disabilities or special needs. If you need special accommodations due to a disability, please inform the Designated Federal Officer no later than 7 days in advance of the meeting using the contact information provided above.

Members of the public may submit written comments on the report to either of the addresses listed above no later than October 14, 2010. All comments will be delivered to the Designated Federal Officer listed on this notice.

Dated: September 29, 2010.

Paul R. Verkuil,

Chairman.

[FR Doc. 2010–24780 Filed 10–1–10; 8:45 am]

BILLING CODE 6110–01–P

DEPARTMENT OF AGRICULTURE

Food Safety and Inspection Service

[Docket No. FSIS–2010–0032]

Codex Alimentarius Commission: Meeting of the Codex Committee on Food Hygiene

AGENCY: Office of the Under Secretary for Food Safety, USDA.

ACTION: Notice of public meeting and request for comments.

SUMMARY: The Office of the Under Secretary for Food Safety, U.S. Department of Agriculture (USDA), and the Food and Drug Administration (FDA), Health and Human Services, are sponsoring a public meeting on November 2, 2010. The objective of the public meeting is to provide information and receive public comments on agenda items and draft U.S. positions that will be discussed at the 42nd Session of the Codex Committee on Food Hygiene (CCFH) of the Codex Alimentarius Commission (Codex), which will be held in Kampala, Uganda, from November 29 through December 3, 2010. The Under Secretary for Food Safety and FDA recognize the importance of providing interested parties the opportunity to obtain background information on the 42nd session of the CCFH and to address items on the agenda.

DATES: The public meeting is scheduled for Tuesday, November 2, 2010, from 1 p.m. to 4 p.m.

ADDRESSES: The public meeting will be held at the USDA, Whitten Building,

1400 Independence Avenue, SW., Room 107–A, Washington, DC 20250. Documents related to the 42nd Session of the CCFH will be accessible via the World Wide Web at the following address: *http://www.codexalimentarius.net/current.asp.*

Call In Information:

Call in Number: 1–866–692–3158.

Passcode: 5986642.

The U.S. Delegate to the 42nd Session of the CCFH, Ms. Jenny Scott, invites interested U.S. parties to submit their comments electronically to the following e-mail address *Jenny.Scott@fda.hhs.gov.*

For Further Information About the 42nd Session of the CCFH Contact: Barbara McNiff, 1400 Independence Avenue, SW., Room 4870, Washington, DC 20250, (202) 690–4719, *Barbara.McNiff@fsis.usda.gov.*

For Further Information About the Public Meeting Contact: Jasmine Matthews, Program Analyst, U.S. Codex Office, 1400 Independence Avenue, SW., Room 4861, Washington, DC 20250, (202) 690–1124, *Jasmine.Matthews@fsis.usda.gov.*

SUPPLEMENTARY INFORMATION:

Background

The Codex was established in 1963 by two United Nations organizations, the Food and Agriculture Organization (FAO) and the World Health Organization (WHO). Through adoption of food standards, codes of practice, and other guidelines developed by its committees, and by promoting their adoption and implementation by governments, Codex seeks to protect the health of consumers and ensure fair practices in the food trade.

The CCFH was established to draft basic provisions on food hygiene applicable to all food; to consider, amend if necessary, and endorse provisions on hygiene prepared by Codex commodity committees and contained in Codex codes of practice unless, in specific cases, the Codex has decided otherwise; to draft provisions on hygiene applicable to specific food items or food groups, whether coming within the terms of reference of a Codex commodity committee or not; to consider specific hygiene problems assigned to it by the Codex; to suggest and prioritize areas where there is a need for microbiological risk assessment at the international level; to develop questions to be addressed by the risk assessors; and, to consider microbiological risk management matters in relation to food hygiene, including food irradiation, and in relation to the risk assessment of FAO and WHO.

The CCFH is hosted by the United States of America.

Issues To Be Discussed at the Public Meeting

The following items on the agenda for the 42nd Session of the CCFH will be discussed during the public meeting:

- Matters Referred by the Codex Alimentarius Commission and Other Codex Committees to the CCFH
- Matters Arising from the Work of FAO, WHO, and Other International Intergovernmental Organizations:

(a) Progress Report on the Joint FAO and WHO Expert Meetings on Microbiological Risk Assessment (JEMRA) and Related Matters

(b) Information from the World Organization for Animal Health (OIE)

- Proposed Draft Guidelines for the Control of *Campylobacter* and *Salmonella spp.* in Chicken Meat at Step 4.
- Proposed Draft Guidelines on the Application of General Principles of Food Hygiene to the Control of Viruses in Food at Step 4.
- Proposed Draft Revision of the Recommended International Code of Hygenic Practice for Collecting, Processing, and Marketing of Natural Mineral Waters at Step 4.
- Proposed Draft Revision of the Principles for the Establishment and Application of Microbiological Criteria for Foods at Step 4.

Each issue listed will be fully described in documents distributed, or to be distributed, by the Secretariat prior to the meeting. Members of the public may access copies of these documents (*see* **ADDRESSES**).

Public Meeting

At the November 2, 2010, public meeting, draft U.S. positions on the agenda items will be described and discussed, and attendees will have the opportunity to pose questions and offer comments. Written comments may be offered at the meeting or sent to the U.S. Delegate for the 42nd Session of the CCFH, Jenny Scott (*see* **ADDRESSES**). Written comments should state that they relate to activities of the 42nd Session of the CCFH.

USDA Nondiscrimination Statement

The U.S. Department of Agriculture (USDA) prohibits discrimination in all its programs and activities on the basis of race, color, national origin, gender, religion, age, disability, political beliefs, sexual orientation, and marital or family status. (Not all prohibited bases apply to all programs.)

Persons with disabilities who require alternative means for communication of program information (Braille, large print, audiotape, etc.) should contact USDA's Target Center at 202–720–2600 (voice and TTY).

To file a written complaint of discrimination, write USDA, Office of the Assistant Secretary for Civil Rights, 1400 Independence Avenue, SW., Washington, DC 20250–9410 or call 202–720–5964 (voice and TTY). USDA is an equal opportunity provider and employer.

Additional Public Notification

Public awareness of all segments of rulemaking and policy development is important. Consequently, in an effort to ensure that the public and in particular minorities, women, and persons with disabilities, are aware of this notice, FSIS will announce it on-line through the FSIS Web page located at *http://www.fsis.usda.gov/regulations/2010_Notices_Index/.*

FSIS also will make copies of this **Federal Register** publication available through the FSIS Constituent Update, which is used to provide information regarding FSIS policies, procedures, regulations, **Federal Register** notices, FSIS public meetings, and other types of information that could affect or would be of interest to our constituents and stakeholders. The Update is communicated via Listserv, a free e-mail subscription service consisting of industry, trade, and farm groups, consumer interest groups, allied health professionals, scientific professionals, and other individuals who have requested to be included. The Update also is available on the FSIS Web page. Through Listserv and the Web page, FSIS is able to provide information to a much broader, more diverse audience. In addition, FSIS offers an e-mail subscription service which provides automatic and customized access to selected food safety news and information. This service is available at *http://www.fsis.usda.gov/News_&_Events/Email_Subscription/.*

Options range from recalls, export information, regulations, directives, and notices. Customers can add or delete subscriptions themselves, and have the option to password protect their accounts.

Done at Washington, DC, on September 28, 2010.

Karen Stuck,

U.S. Manager for Codex Alimentarius.

[FR Doc. 2010–24767 Filed 10–1–10; 8:45 am]

BILLING CODE 3410–DM–P

DEPARTMENT OF AGRICULTURE

Foreign Agricultural Service

Trade Adjustment Assistance for Farmers

AGENCY: Foreign Agricultural Service, USDA.

ACTION: Notice.

The Administrator, Foreign Agricultural Service (FAS), certified two petitions (petition nos. 2011002 and 2011022) for trade adjustment assistance (TAA) for shrimp filed under the fiscal year (FY) 2011 program on behalf of shrimp producers in Alabama, Alaska, Florida, Georgia, Louisiana, Mississippi, North Carolina, South Carolina, and Texas. The petitions were accepted for review by USDA on July 21, 2010. For programmatic purposes, this **Federal Register** notice combines both FY 2011 shrimp petitions under petition number 2011002.

SUPPLEMENTARY INFORMATION: All petitions were analyzed by USDA's Economic Research Service and reviewed by the TAA for Farmers Program Review Committee, comprised of representatives from USDA's Office of the Chief Economist, Farm Service Agency, Agricultural Marketing Service, and FAS. After a review, the Administrator determined that increased imports of shrimp during January–December 2008 contributed importantly to a greater than 15-percent decline in the quantity of production in 2008, compared to the previous 3-year average. This conforms to the eligibility requirements stipulated in Subtitle C of Title I of the Trade Act of 2002 (Pub. L. 107–210).

Because both petitions met the program's eligibility criteria, the Administrator was able to certify them, making shrimp producers in Alabama, Alaska, Florida, Georgia, Louisiana, Mississippi, North Carolina, South Carolina, and Texas eligible for trade adjustment assistance in FY 2011.

Eligible individual shrimp producers in these states, who did not qualify for benefits under the FY 2010 program, may apply for technical training and cash benefits by completing and submitting a written application to their local Farm Service Agency county office by the application deadline of December 23, 2010. After submitting a completed application, producers may receive technical assistance at no cost and cash benefits, if the applicable program eligibility requirements are satisfied. Applicants must complete the technical assistance training under the program in order to be eligible for cash benefits.

Producers Certified As Eligible For TAA For Farmers Contact: Your local USDA Farm Service Agency county office.

FOR FURTHER GENERAL INFORMATION CONTACT: Trade Adjustment Assistance for Farmers Program Staff, Office of Trade Programs, FAS, USDA, at (202) 720–0638 or (202) 690–0633, or by e-mail at: *http://tradeadjustment@fas.usda.gov,* or visit the TAA for Farmers' Web site at: *http://www.taaforfarmers.org* or the FAS Web site at: *http://www.fas.usda.gov/itp/taa.*

Dated: September 24, 2010.

Suzanne Hale

Administrator, Foreign Agricultural Service.

[FR Doc. 2010–24818 Filed 10–1–10; 8:45 am]

BILLING CODE 3410–10–P

DEPARTMENT OF AGRICULTURE

Foreign Agricultural Service

Trade Adjustment Assistance for Farmers

AGENCY: Foreign Agricultural Service, USDA.

ACTION: Notice.

The Administrator, Foreign Agricultural Service (FAS), certified five petitions (petition nos. 2011003, 2011012, 2011013, 2011018, and 2011030) for trade adjustment assistance (TAA) for lobster filed under the fiscal year (FY) 2011 program on behalf of lobster producers in Connecticut, Maine, Massachusetts, New Hampshire, and Rhode Island. The Connecticut petition was accepted for review by USDA on August 13, 2010; the Maine petition accepted July 21, 2010; the Massachusetts and New Hampshire petitions accepted August 2, 2010; and the Rhode Island petition accepted August 13, 2010. For programmatic purposes, this **Federal Register** notice combines all FY 2011 lobster petitions under petition number 2011003.

SUPPLEMENTARY INFORMATION: All petitions were analyzed by USDA's Economic Research Service and reviewed by the TAA for Farmers Program Review Committee, comprised of representatives from USDA's Office of the Chief Economist, Farm Service Agency, Agricultural Marketing Service, and FAS. After a review, the Administrator determined that increased imports of lobster during January–December 2009 contributed importantly to a greater than 15-percent decline in the value of production in 2009, compared to the previous 3-year average. This conforms to the eligibility requirements stipulated in Subtitle C of Title I of the Trade Act of 2002 (Pub. L. 107–210).

Because these petitions met the program's eligibility criteria, the Administrator was able to certify them, making lobster producers in Connecticut, Maine, Massachusetts, New Hampshire, and Rhode Island eligible for trade adjustment assistance in FY 2011. Eligible individual lobster producers in these states may apply for technical training and cash benefits by completing and submitting a written application to their local Farm Service Agency county office by the application deadline of December 23, 2010. After submitting a completed application, producers may receive technical assistance at no cost and cash benefits, if the applicable program eligibility requirements are satisfied. Applicants must complete the technical assistance training under the program in order to be eligible for cash benefits.

Producers Certified as Eligible for TAA for Farmers Contact: Your local USDA Farm Service Agency county office.

For Further General Information Contact: Trade Adjustment Assistance for Farmers Program Staff, Office of Trade Programs, FAS, USDA, at (202) 720–0638 or (202) 690–0633, or by e-mail at: *tradeadjustment@fas.usda.gov,* or visit the TAA for Farmers' Web site at: *http://www.taaforfarmers.org* or the FAS Web site at: *http://www.fas.usda.gov/itp/taa.*

Dated: September 24, 2010.

Suzanne Hale,

Administrator, Foreign Agricultural Service.

[FR Doc. 2010–24819 Filed 10–1–10; 8:45 am]

BILLING CODE 3410–10–P

DEPARTMENT OF AGRICULTURE

Animal and Plant Health Inspection Service

[Docket No. APHIS–2006–0172]

Interstate Movement of Garbage From Hawaii; Withdrawal of Finding of No Significant Impact

AGENCY: Animal and Plant Health Inspection Service, USDA.

ACTION: Notice; withdrawal of finding of no significant impact.

SUMMARY: On May 27, 2010, we advised the public that the Animal and Plant Health Inspection Service prepared an environmental assessment and a finding of no significant impact relative to a request to allow the interstate movement of municipal solid waste

from Hawaii to a landfill in the State of Washington. Because we have been made aware of additional information that was not previously provided and we have an interest in examining that information to determine the potential impacts, we are withdrawing the finding of no significant impact effective immediately in order to reevaluate the potential for environmental impacts that may be associated with this action.

DATES: *Effective Date:* October 4, 2010.

FOR FURTHER INFORMATION CONTACT: Mr. David Lamb, Import Specialist, Regulatory Coordination and Compliance, PPQ, APHIS, 4700 River Road Unit 133, Riverdale, MD 20737–1231; (301) 734–0627.

SUPPLEMENTARY INFORMATION:

Background

The importation and interstate movement of garbage is regulated by the Animal and Plant Health Inspection Service under 7 CFR 330.400 and 9 CFR 94.5 in order to protect against the introduction into and dissemination within the United States of plant and animal pests and diseases.

On January 19, 2010, we published in the **Federal Register** (75 FR 2845–2846, Docket No. APHIS–2006–0172) a notice [1] in which we announced the availability, for public review and comment, of an environmental assessment documenting our review and analysis of the environmental impacts associated with, and alternatives to, the movement of palletized or containerized baled municipal solid waste to three existing ports on the Columbia River via barge and the transfer and transportation of the waste via truck or rail to the landfill.

We solicited comments on the environmental assessment for 30 days ending on February 18, 2010. We received 37 comments by that date. The commenters raised several issues, including the potential for invasive species/pest introductions, impacts on air and water quality, impacts on fish and wildlife habitat, impacts on existing infrastructure (highway, rail, and barge), increased traffic at associated ports, and the adequacy of the environmental assessment's analysis of cumulative effects.

On May 27, 2010, we published in the **Federal Register** (75 FR 29706, Docket No. APHIS–2006–0172) a notice announcing the availability of a final environmental assessment and our finding of no significant impact (FONSI).

Although the agency had requested public comment on the environmental assessment published on January 19, 2010, with comments due on February 18, 2010, we received new information regarding potential impacts from that action after the FONSI had been issued. Because APHIS had not previously had the opportunity to evaluate this new information, we have decided to withdraw the FONSI effective immediately and reevaluate the potential environmental impacts that may be associated with this action.

Done in Washington, DC, this 28th day of September 2010.

Kevin Shea,

Acting Administrator, Animal and Plant Health Inspection Service.

[FR Doc. 2010–24817 Filed 10–1–10; 8:45 am]

BILLING CODE 3410–34–P

[1] To view the environmental assessment, the comments we received and our responses to the comments, and the finding of no significant impact, go to *http://www.regulations.gov/fdmspublic/component/main?main=DocketDetail&d=APHIS-2006-0172.*

DEPARTMENT OF COMMERCE

International Trade Administration

[A–552–802]

Certain Frozen Warmwater Shrimp From the Socialist Republic of Vietnam: Amended Final Results of Antidumping Duty Administrative Review

AGENCY: Import Administration, International Trade Administration, Department of Commerce.

DATES: *Effective Date:* October 4, 2010

FOR FURTHER INFORMATION CONTACT: Susan Pulongbarit, or Paul Walker, AD/CVD Operations, Office 9, Import Administration, International Trade Administration, U.S. Department of Commerce, 14th Street and Constitution Avenue, NW., Washington, DC 20230; telephone: (202) 482–4031, or (202) 482–0413.

SUPPLEMENTARY INFORMATION:

Background

On August 9, 2010, the Department of Commerce ("Department") published in the **Federal Register** the final results of the fourth administrative review of the antidumping duty order on certain frozen warmwater shrimp from the Socialist Republic of Vietnam ("Vietnam") for the period from February 1, 2008, through January 31, 2009.[1]

On August 10, 2010, Minh Phu Seafood Corporation (and its affiliates Minh Qui Seafood Co., Ltd. and Minh Phat Seafood Co., Ltd. (collectively "Minh Phu Group")), Nha Trang Seaproduct Company ("Nha Trang Seafoods"), and Minh Hai-Joint Stock Seafoods Processing Company ("Seaprodex Minh Hai") (collectively "Respondents") filed a timely allegation that the Department made various ministerial errors in the *Final Results* and requested, pursuant to 19 CFR 351.224, that the Department correct the alleged ministerial errors. No other parties in this proceeding submitted comments on the Department's final margin calculations. Based upon our analysis of the comments and allegations of ministerial errors, we made changes to the margin calculation for Nha Trang Seafoods and the Minh Phu Group, and corrected Seaprodex Minh Hai's separate rate status. Furthermore, as a result of correcting the errors in the margin calculations for Nha Trang Seafoods and the Minh Phu Group, the margin for the companies granted separate-rate status were also revised because the margin for those companies were derived from Nha Trang Seafoods' and the Minh Phu Group's margins.

Scope of the Antidumping Duty Order

The scope of this order includes certain warmwater shrimp and prawns, whether frozen, wild-caught (ocean harvested) or farm-raised (produced by aquaculture), head-on or head-off, shell-on or peeled, tail-on or tail-off, 3535 "Tails" in this context means the tail fan, which includes the telson and the uropods. deveined or not deveined, cooked or raw, or otherwise processed in frozen form.

The frozen warmwater shrimp and prawn products included in the scope of this investigation, regardless of definitions in the Harmonized Tariff Schedule of the United States ("HTS"), are products which are processed from warmwater shrimp and prawns through freezing and which are sold in any count size.

The products described above may be processed from any species of warmwater shrimp and prawns. Warmwater shrimp and prawns are generally classified in, but are not limited to, the Penaeidae family. Some examples of the farmed and wild-caught warmwater species include, but are not limited to, whiteleg shrimp (Penaeus vannemei), banana prawn (Penaeus merguiensis), fleshy prawn (Penaeus chinensis), giant river prawn (Macrobrachium rosenbergii), giant tiger prawn (Penaeus monodon), redspotted

[1] See Certain Frozen Warmwater Shrimp from the Socialist Republic of Vietnam: Final Results, Partial Rescission of Antidumping Duty Administrative Review, 75 FR 47771 (August 9, 2010) ("Final Results").

shrimp (Penaeus brasiliensis), southern brown shrimp (Penaeus subtilis), southern pink shrimp (Penaeus notialis), southern rough shrimp (Trachypenaeus curvirostris), southern white shrimp (Penaeus schmitti), blue shrimp (Penaeus stylirostris), western white shrimp (Penaeus occidentalis), and Indian white prawn (Penaeus indicus).

Frozen shrimp and prawns that are packed with marinade, spices or sauce are included in the scope of this investigation. In addition, food preparations, which are not "prepared meals," that contain more than 20 percent by weight of shrimp or prawn are also included in the scope of this investigation.

Excluded from the scope are: (1) Breaded shrimp and prawns (HTS subheading 1605.20.10.20); 2) shrimp and prawns generally classified in the Pandalidae family and commonly referred to as coldwater shrimp, in any state of processing; (3) fresh shrimp and prawns whether shell-on or peeled (HTS subheadings 0306.23.00.20 and 0306.23.00.40); (4) shrimp and prawns in prepared meals (HTS subheading 1605.20.05.10); (5) dried shrimp and prawns; (6) canned warmwater shrimp and prawns (HTS subheading 1605.20.10.40); (7) certain dusted shrimp; and (8) certain battered shrimp. Dusted shrimp is a shrimp-based product: (1) That is produced from fresh (or thawed-from-frozen) and peeled shrimp; (2) to which a "dusting" layer of rice or wheat flour of at least 95 percent purity has been applied; (3) with the entire surface of the shrimp flesh thoroughly and evenly coated with the flour; (4) with the non-shrimp content of the end product constituting between four and 10 percent of the product's total weight after being dusted, but prior to being frozen; and (5) that is subjected to individually quick frozen ("IQF") freezing immediately after application of the dusting layer. Battered shrimp is a shrimp-based product that, when dusted in accordance with the definition of dusting above, is coated with a wet viscous layer containing egg and/or milk, and par-fried.

The products covered by this investigation are currently classified under the following HTS subheadings: 0306.13.00.03, 0306.13.00.06, 0306.13.00.09, 0306.13.00.12, 0306.13.00.15, 0306.13.00.18, 0306.13.00.21, 0306.13.00.24, 0306.13.00.27, 0306.13.00.40, 1605.20.10.10, and 1605.20.10.30. These HTS subheadings are provided for convenience and for customs purposes only and are not dispositive, but rather the written description of the scope of this investigation is dispositive.

Amended Final Results of the Review

The Act defines "ministerial error" as including "errors in addition, subtraction, or other arithmetic function, clerical errors resulting from inaccurate copying, duplication, or the like, and any other type of unintentional error which the administering authority considers ministerial." *See* section 751(h) of the Act. After analyzing Respondents' comments, we have determined, in accordance with section 751(h) of the Act and 19 CFR 351.224(e), that we made certain ministerial errors in our calculations for the final results with respect to certain surrogate values for Nha Trang Seafoods, the surrogate SG&A ratio for Nha Trang Seafoods and the Minh Phu Group, and Seaprodex Min Hai's separate rate status. For a detailed discussion of these ministerial errors, as well as the Department's analysis of these errors, see Memorandum to James C. Doyle, through Scot T. Fullerton, from Susan Pulongbarit, regarding "Fourth Antidumping Administrative Review of Frozen Warmwater Shrimp from the Socialist Republic of Vietnam: Ministerial Error Memorandum," dated concurrently with this notice ("Ministerial Errors Memo").

Because we have revised the rates for Nha Trang Seafoods and the Minh Phu Group, we are also revising the margin for the companies granted separate-rate status because the margin for those companies was calculated as the simple average of Nha Trang Seafoods' and the Minh Phu Group's margins. In accordance with section 751(h) of the Act, we are amending the final results of the fourth administrative review of certain warmwater shrimp from Vietnam. As a result of correcting the ministerial errors discussed above, we determine that the following dumping margins exist for the period February 1, 2008, through January 30, 2009:

Manufacturer/exporter	Original margin (percent)	Revised margin (percent)
Minh Phu Group:		
Minh Phat Seafood Co., Ltd., aka	2.96	2.95
Minh Phat Seafood aka		
Minh Phu Seafood Export Import Corporation (and affiliates Minh Qui Seafood Co., Ltd. and Minh Phat Seafood Co., Ltd.) aka		
Minh Phu Seafood Corp. aka		
Minh Phu Seafood Corporation aka		
Minh Qui Seafood aka		
Minh Qui Seafood Co., Ltd.		
Nha Trang Seaproduct Company ("Nha Trang Seafoods") [2] aka	5.58	4.89
Nha Trang Seafoods aka		
Nha Trang Seaproduct Company Nha Trang Seafoods		
Bac Lieu Fisheries Company Limited, aka	4.27	3.92
Bac Lieu Fisheries Company Limited ("Bac Lieu") aka		
Bac Lieu Fisheries Joint Stock Company aka		
Bac Lieu Fisheries Limited Company aka		
Bac Lieu Fisheries Company Limited [3]		
C.P. Vietnam Livestock Company Limited ("C.P. Vietnam") aka	4.27	3.92
C.P. Vietnam Livestock Company Limited aka		
C.P. Vietnam Livestock Corporation ("C.P. Vietnam")		
Cadovimex Seafood Import-Export and Processing Joint Stock Company ("CADOVIMEX–VIETNAM") aka	4.27	3.92
Cai Doi Vam Seafood Import-Export Company ("Cadovimex") aka		
Cai Doi Vam Seafood aka		
Cai Doi Vam Seafood Im-Ex Company (Cadovimex) aka		
Cai Doi Vam Seafood Processing Factory aka		
Caidoivam Seafood Company (Cadovimex) aka		
Caidoivam Seafood Im-Ex Co.		

Manufacturer/exporter	Original margin (percent)	Revised margin (percent)
Cafatex Fishery Joint Stock Corporation (“Cafatex Corp.”) aka	4.27	3.92
Cantho Animal Fisheries Product Processing Export Enterprise (Cafatex), aka		
Cafatex, aka		
Cafatex Vietnam, aka		
Xi Nghiep Che Bien Thuy Suc San Xuat Kau Cantho, aka		
Cas, aka		
Cas Branch, aka		
Cafatex Saigon, aka		
Cafatex Fishery Joint Stock Corporation, aka		
Cafatex Corporation, aka		
Taydo Seafood Enterprise		
Cafatex Corp.		
Cam Ranh Seafoods Processing Enterprise Company (“Camranh Seafoods”) aka Camranh Seafoods	4.27	3.92
Camau Frozen Seafood Processing Import Export Corporation (“CAMIMEX”) [4] aka	4.27	3.92
Camimex aka		
Camau Seafood Factory No. 4 aka		
Camau Seafood Factory No. 5 aka		
Camau Frozen Seafood Processing Import & Export aka		
Camau Frozen Seafood Processing Import Export Corp. (CAMIMEX–FAC 25) aka		
Frozen Factory No. 4		
Can Tho Agricultural and Animal Products Import Export Company (“CATACO”) aka	4.27	3.92
Can Tho Agricultural Products aka		
CATACO aka		
Can Tho Agricultural and Animal Products Imex Company		
Can Tho Import Export Fishery Limited Company (“CAFISH”)	4.27	3.92
Coastal Fishery Development aka	4.27	3.92
Coastal Fisheries Development Corporation (“Cofidec”) aka		
COFIDEC aka		
Coastal Fisheries Development Corporation aka		
Coastal Fisheries Development Co., aka		
Coastal Fisheries Development Corp.		
Cuulong Seaproducts Company (“Cuu Long Seapro”) aka	4.27	3.92
Cuu Long Seaproducts Limited (“Cuulong Seapro”) aka		
Cuulong Seapro aka		
Cuulong Seaproducts Company (“Cuulong Seapro”) aka		
Cuu Long Seaproducts Company (“Cuu Long Seapro”) aka		
Cuu Long Seaproducts Company aka		
Cuu Long Seapro aka		
Cuulong Seaproducts Company (“Cuu Long Seapro”) aka		
Cuu Long Seaproducts Limited (Cuulong Seapro) aka		
Cuulong Seapro aka		
Cuulong Seaproduct Company		
Danang Seaproducts Import Export Corporation (“Seaprodex Danang”) aka	4.27	3.92
Danang Seaproducts Import Export Corporation aka		
Danang Seaproduct Import-Export Corporation aka		
Danang Seaproducts Import Export aka		
Tho Quang Seafood Processing & Export Company aka		
Seaprodex Danang aka		
Tho Quang Seafood Processing and Export Company aka		
Tho Quang, aka		
Tho Quang Co.[5]		
Gallant Ocean (Vietnam) Co., Ltd. (“Gallant Ocean Vietnam”)	4.27	3.92
Grobest & I–Mei Industrial Vietnam, aka	4.27	3.92
Grobest, aka		
Grobest & I–Mei Industrial (Vietnam) Co., Ltd.		
Investment Commerce Fisheries Corporation (“Incomfish”) aka	4.27	3.92
Incomfish aka		
Investment Commerce Fisheries Corp., aka		
Incomfish Corp., aka		
Incomfish Corporation aka		
Investment Commerce Fisheries aka		
Investment Commerce Fisheries Corporation		
Kim Anh Company Limited (“Kim Anh”)	4.27	3.92
Minh Hai Export Frozen Seafood Processing Joint Stock Company aka	4.27	3.92
Minh Hai Jostoco aka		
Minh Hai Export Frozen Seafood Processing Joint-Stock Company (“Minh Hai Jostoco”) aka		
Minh Hai Export Frozen Seafood Processing Joint-Stock Company aka		
Minh Hai Joint Stock Seafood Processing Joint-Stock Company aka		
Minh Hai Export Frozen Seafood Processing Joint-Stock Co., aka		
Minh-Hai Export Frozen Seafood Processing Joint-Stock Company		
Minh Hai Joint-Stock Seafoods Processing Company (“Seaprodex Minh Hai”) aka	4.27	3.92
Sea Minh Hai aka		

Manufacturer/exporter	Original margin (percent)	Revised margin (percent)
Minh Hai Joint-Stock Seafoods Processing Company aka		
Seaprodex Minh Hai aka		
Seaprodex Min Hai aka		
Seaprodex Minh Hai (Minh Hai Joint Stock Seafoods Processing Co.) aka		
Seaprodex Minh Hai Factory aka		
Seaprodex Minh Hai Factory No. 69 aka		
Seaprodex Minh Hai Workshop 1 aka		
Seaprodex Minh Hai-Factory No. 78 aka		
Workshop I Seaprodex Minh Hai		
Minh Hai Sea Products Import Export Company (“Seaprimex Co”), aka	4.27	3.92
Ca Mau Seafood Joint Stock Company (“SEAPRIMEXCO”) aka		
Seaprimexco Vietnam, aka		
Seaprimexco		
Ca Mau Seafood Joint Stock Company (“Seaprimexco”)		
Minh Hai Seaproducts Import Export Corporation		
Seaprimexco		
Minh Hai Seaproducts Co Ltd. (Seaprimexco).		
Ngoc Sinh Private Enterprise aka	4.27	3.92
Ngoc Sinh Seafoods aka		
Ngoc Sinh Seafoods Processing and Trading Enterprise aka		
Ngoc Sinh Fisheries aka		
Ngoc Sinh Private Enterprises aka		
Ngoc Sinh Seafoods Processing and Trading Enterprises aka		
Ngoc Sinh aka		
Ngoc Sinh Seafood Processing Company aka		
Ngoc Sinh Seafoods (Private Enterprise)		
Nha Trang Fisheries Joint Stock Company (“Nha Trang Fisco”) aka	4.27	3.92
Nha Trang Fisheries Joint Stock Company aka		
Nhatrang Fisheries Joint Stock Company aka		
Nha Trang Fisco aka		
Nhatrang Fisco aka		
Nha Trang Fisheries Joint Stock Company (“Nha Trang Fisco”) aka		
Nha Trang Fisheries, Joint Stock		
Phu Cuong Seafood Processing and Import-Export Co., Ltd.	4.27	3.92
Phuong Nam Co., Ltd. (“Phuong Nam”) aka	4.27	3.92
Western Seafood Processing and Exporting Factory (“Western Seafood”)		
Sao Ta Foods Joint Stock Company (“Fimex VN”) aka	4.27	3.92
Sao Ta Foods Joint Stock Company aka		
Fimex VN aka		
Sao Ta Seafood Factory aka		
Saota Seafood Factory		
Soc Trang Aquatic Products and General Import Export Company (“Stapimex”) aka	4.27	3.92
Soc Trang Seafood Joint Stock Company (“Stapimex”) aka		
Soc Trang Aquatic Products and General Import Export Company aka		
Stapimex aka		
Soc Trang Aquatic Products and General Import Export Company-(Stapimex) aka		
Stapimex Soc Trans Aquatic Products and General Import Export Company aka		
Stapmex		
Thuan Phuoc Seafoods and Trading Corporation aka	4.27	3.92
Frozen Seafoods Factory No. 32 aka		
Seafoods and Foodstuff Factory aka		
My Son Seafoods Factory		
UTXI Aquatic Products Processing Company aka	4.27	3.92
UT XI Aquatic Products Processing Company aka		
UT–XI Aquatic Products Processing Company aka		
UTXI aka		
UTXI Co. Ltd., aka		
Khanh Loi Seafood Factory aka		
Hoang Phuong Seafood Factory aka		
UTXI Aquatiac Products Processing Corporation (“UTXICO”)		
Viet Foods Co., Ltd. aka	4.27	3.92
Nam Hai Foodstuff and Export Company Ltd.		
Viet Hai Seafood Co., Ltd. aka	4.27	3.92
Vietnam Fish One Co., Ltd. (“Fish One”)		
Vinh Loi Import Export Company (“Vimexco”), aka	4.27	3.92
Vinh Loi Import Export Company (“VIMEX”), aka		
VIMEXCO aka		
VIMEX aka		
Vinh Loi Import/Export Co., aka		
Vinhloi Import Export Company aka		
Vinh Loi Import-Export Company		

The Department will determine and the U.S. Bureau of Customs and Border Protection ("CBP") shall assess antidumping duties on all appropriate entries. Except where the Court of International Trade has issued a preliminary injunction enjoining the liquidation of certain entries during the period of review, we intend to issue appropriate assessment instructions directly to CBP 15 days after publication of these amended final results of review. For a general discussion of the application of assessment rates, see *Final Results,* 75 FR at 47776.

Cash Deposit Requirements

For all shipments of certain warmwater shrimp from Vietnam entered, or withdrawn from warehouse, for consumption on or after the publication date of these *Amended Final Results,* as provided by section 751(a)(2)(C) of the Act: (1) For companies covered by this review, the cash deposit rate will be the rate listed above; (2) for previously reviewed or investigated companies other than those covered by this review, the cash deposit rate will be the company-specific rate established for the most recent period; (3) if the exporter is not a firm covered in this review, a prior review, or the less-than-fair-value investigation, but the producer is, the cash deposit rate will be the rate established for the most recent period for the manufacturer of the subject merchandise; and (4) if neither the exporter nor the producer is a firm covered in this review, a prior review, or the investigation, the cash deposit rate will be 25.76 percent, the Vietnam-wide rate established in the less-than-fair-value investigation. These deposit requirements shall remain in effect until further notice.

Reimbursement of Duties

This notice also serves as a final reminder to importers of their responsibility under 19 CFR 351.402(f) to file a certificate regarding the reimbursement of antidumping duties prior to liquidation of the relevant entries during this review period. Failure to comply with this requirement could result in the presumption that reimbursement of antidumping duties occurred and the subsequent increase in antidumping duties by the amount of antidumping duties reimbursed.

Administrative Protective Order

This notice also is the only reminder to parties subject to administrative protective order ("APO") of their responsibility concerning the return or destruction of proprietary information disclosed under APO in accordance with 19 CFR 351.305. Timely written notification of the return/destruction of APO materials or conversion to judicial protective order is hereby requested. Failure to comply with the regulations and the terms of an APO is a sanctionable violation.

These amended final results of administrative review and notice are issued and published in accordance with sections 751(h), and 777(i)(1) of the Act, and 19 CFR 351.224.

Dated: September 29, 2010.

Ronald K. Lorentzen,

Deputy Assistant Secretary for Import Administration.

[FR Doc. 2010–24997 Filed 10–1–10; 8:45 am]

BILLING CODE 3510–DS–P

[2] *See* Letter from Thompson Hine representing the Minh Phu Group, Nha Trang Seafoods, Camimex, and Grobest, to Secretary of Commerce, regarding Certain Frozen Warmwater Shrimp from Vietnam: Case Brief on behalf of Certain Respondents, dated, April 21, 2010 ("Respondents Case Brief") at 44 for proprietary named used by importer.

[3] *See* Respondents Case Brief at 24 for proprietary name used by importer.

[4] *See* Respondents Case Brief at 44 for proprietary names used by importers.

[5] *See* Respondents Case Brief at 44 for proprietary names used by importers.

DEPARTMENT OF COMMERCE

International Trade Administration

Virginia Commonwealth University, School of Medicine; Notice of Decision on Applications for Duty-Free Entry of Scientific Instruments

This is a decision pursuant to Section 6(c) of the Educational, Scientific, and Cultural Materials Importation Act of 1966 (Pub. L. 89–651, as amended by Public Law 106–36; 80 Stat. 897; 15 CFR part 301). Related records can be viewed between 8:30 a.m. and 5 p.m. in Room 3720, U.S. Department of Commerce, 14th and Constitution Ave, NW., Washington, DC.

Docket Number: 10–022. *Applicant:* Virginia Commonwealth University, School of Medicine, Richmond, VA 23298–0551. *Instrument:* Electron Microscope. *Manufacturer:* FEI Company, the Netherlands. *Intended Use: See* notice at 75 FR 53271, August 31, 2010. *Comments:* None received. *Decision:* Approved. *Reasons:* The instrument will be used to investigate the three dimensional structure of biological macromolecules, which will be observed under cryogenic conditions. We know of no instruments of equivalent scientific value to the foreign instruments described above, for such purposes as this is intended to be used, that was being manufactured in the United States at the time of its order.

Dated: September 28, 2010.

Gregory W. Campbell,

Acting Director, Subsidies Enforcement Office, Import Administration.

[FR Doc. 2010–24834 Filed 10–1–10; 8:45 am]

BILLING CODE 3510–DS–P

DEPARTMENT OF COMMERCE

International Trade Administration

[A–570–904]

Certain Activated Carbon From the People's Republic of China: Extension of Time Limit for Final Results of the Antidumping Duty Administrative Review

AGENCY: Import Administration, International Trade Administration, Department of Commerce.

DATES: *Effective Date:* October 4, 2010.

FOR FURTHER INFORMATION CONTACT: Bob Palmer or Kathleen Marksberry, AD/CVD Operations, Office 9, Import Administration, International Trade Administration, Department of Commerce, 14th Street and Constitution Avenue, NW., Washington, DC 20230; telephone: (202) 482–9068 or (202) 482–7906, respectively.

Background

On May 29, 2009, Department of Commerce ("Department") published the notice of the initiation of the antidumping duty administrative review on certain activated carbon from the People's Republic of China ("PRC"), covering the period April 1, 2008, through March 31, 2009. *See Initiation of Antidumping and Countervailing Duty Administrative Reviews and Requests for Revocation in Part,* 74 FR 25711 (May 29, 2009) ("*Initiation Notice*").

On May 13, 2010, the Department published the preliminary results of this review. *See Certain Activated Carbon From the People's Republic of China: Notice of Preliminary Results of the Second Antidumping Duty Administrative Review, and Preliminary Rescission in Part,* 75 FR 26927 (May 13, 2010) ("*Preliminary Results*"). On July 13, 2010, the Department extended the final results by 45 days. *See Certain Activated Carbon From the People's Republic of China: Extension of Time Limit for Final Results of the Antidumping Duty Administrative Review,* 75 FR 39916 (July 13, 2010). The final results are currently due on October 25, 2010.

Extension of Time Limits for Final Results

Section 751(a)(3)(A) of the Tariff Act of 1930, as amended ("Act"), requires the Department to issue the final results in an administrative review of an antidumping duty order 120 days after the date on which the preliminary results are published. The Department may, however, extend the deadline for completion of the final results of an administrative review to 180 days if it determines it is not practicable to complete the review within the foregoing time period. *See* section 751(a)(3)(A) of the Act and 19 CFR 351.213(h)(2).

The Department requires additional time to complete this review because the Department must analyze and consider significant issues raised in the parties' case and rebuttal briefs and fully analyze the parties' post-preliminary surrogate value submissions. Thus, it is not practicable to complete this review by the current due date. Therefore, we are extending the time for the completion of the final results of this review by an additional 15 days to November 9, 2010.

This notice is published in accordance with sections 751(a)(1) and 777(i)(1) of the Act.

Dated: September 28, 2010.

Susan H. Kuhbach,

Acting Deputy Assistant Secretary for Antidumping and Countervailing Duty Operations.

[FR Doc. 2010–24830 Filed 10–1–10; 8:45 am]

BILLING CODE 3510–DS–P

DEPARTMENT OF COMMERCE

International Trade Administration

[A–570–855]

Non–Frozen Apple Juice Concentrate from the People's Republic of China: Extension of Time Limit for the Final Results of the New Shipper Antidumping Duty Review

AGENCY: Import Administration, International Trade Administration, Department of Commerce.

EFFECTIVE DATE: October 4, 2010.

FOR FURTHER INFORMATION CONTACT: Alexis Polovina, AD/CVD Operations, Office 9, Import Administration, International Trade Administration, U.S. Department of Commerce, 14th Street and Constitution Avenue, NW, Washington, DC 20230; telephone: (202) 482–3927.

SUPPLEMENTARY INFORMATION:

Background

On August 5, 2010, the Department of Commerce ("Department") published in the **Federal Register** its preliminary results of the new shipper review of the antidumping duty order on non–frozen apple juice concentrate from the People's Republic of China ("PRC").[1] This review covers the period June 1, 2009, through January 20, 2010. The final results of review are currently due no later than October 28, 2010.

Extension of Time Limit for Final Results of Review

Section 751(a)(2)(B)(iv) of the Tariff Act of 1930, as amended (the Act), and 19 CFR 351.214(i)(1), provide that the Department will issue the final results of review within 90 days after the date on which the preliminary results were issued. However, if the Secretary concludes that a new shipper review is extraordinarily complicated, the Secretary may extend the 90-day period to 150 days. *See* 19 CFR 351.214(i)(2).

The Department determines that this new shipper review involves extraordinarily complicated methodological issues, including the continued evaluation of the most appropriate methodology for valuing labor. Therefore, in accordance with section 751(a)(2)(B)(iv) of the Act and 19 CFR 351.214(i)(2), the Department is extending the time limit for the final results from 90 days to 150 days. Therefore, the final results will now be due no later than December 27, 2010.

We are issuing and publishing this notice in accordance with sections 751(a)(2)(B)(iv) and 777(i) of the Act.

Dated: September 28, 2010.

Susan H. Kuhbach,

Acting Deputy Assistant Secretary for Antidumping and Countervailing Duty Operations.

[FR Doc. 2010–24832 Filed 10–1–10; 8:45 am]

BILLING CODE 3510–DS–S

[1] *See Certain Non-Frozen Apple Juice Concentrate from the People's Republic of China: Notice of Preliminary Results of the New Shipper Review*, 75 FR 47270 (August 5, 2010).

DEPARTMENT OF COMMERCE

International Trade Administration

[A–489–815]

Light–Walled Rectangular Pipe and Tube from Turkey; Notice of Final Results of Antidumping Duty Administrative Review

AGENCY: Import Administration, International Trade Administration, Department of Commerce.

SUMMARY: On June 15, 2010, the Department of Commerce (the Department) published in the **Federal Register** the preliminary results of the administrative review of the antidumping duty order on Light–Walled Rectangular Pipe and Tube from Turkey. *See Light–Walled Rectangular Pipe and Tube from Turkey; Notice of Preliminary Results of Antidumping Duty Administrative Review*, 75 FR 33779 (June 15, 2010) (*Preliminary Results*). We gave interested parties an opportunity to comment on the *Preliminary Results*, but and received noneno comments.

EFFECTIVE DATE: October 4, 2010.

FOR FURTHER INFORMATION CONTACT: Tyler Weinhold, or Robert James, AD/CVD Operations, Office 7, Import Administration, International Trade Administration, U.S. Department of Commerce, 14th Street and Constitution Avenue, NW, Washington, DC 20230; telephone (202) 482–1121 or (202) 482–0649, respectively

SUPPLEMENTARY INFORMATION:

Background

On June 15, 2010, the Department published the preliminary results of administrative review of the antidumping duty order covering light–walled rectangular pipe and tube from Turkey. *See Preliminary Results*. The parties subject to this review are Tosçelik Profil ve Sac Endustrisi A.S. and Tosyali Dis Ticaret A.S. (collectively, Tosçelik). The petitioners in this proceeding are Atlas Tube, Inc. and Searing Industries, Inc. (collectively, Petitioners).

In the *Preliminary Results*, the Department stated that interested parties were to submit case briefs within 30 days of publication of the *Preliminary Results* and rebuttal briefs within five days after the due date for filing case briefs. *See Preliminary Results* at 33782. No interested party submitted a case or rebuttal brief. On July 29, 2010, we released the verification report for the sales verification of Tosçelik. *See* Memorandum from Tyler Weinhold and Mark Flessner to the file, "Verification of Sections A–C Questionnaire Responses submitted by Toscelik Profil ve Sac End. A.S. (Toscelik Profil) and its affiliated exporter Tosyali Dis Ticaret San. A.S. (Tosyali Dis Ticaret) (collectively Toscelik) in the Antidumping Duty Administrative Review of Light–Walled Rectangular Pipe and Tube From Turkey" (Verification Report). No interested party submitted comments on the report. We made no changes for the final results.

Period of Review

The period of review (POR) is January 30, 2008, through April 30, 2009.

Scope of the Order

The merchandise subject to this order is certain welded carbon quality light–walled steel pipe and tube, of rectangular (including square) cross section, having a wall thickness of less than 4 mm. The term carbon–quality steel includes both carbon steel and alloy steel which contains only small amounts of alloying elements. Specifically, the term carbon–quality includes products in which none of the elements listed below exceeds the quantity by weight respectively indicated: 1.80 percent of manganese, or 2.25 percent of silicon, or 1.00 percent of copper, or 0.50 percent of aluminum, or 1.25 percent of chromium, or 0.30 percent of cobalt, or 0.40 percent of lead, or 1.25 percent of nickel, or 0.30 percent of tungsten, or 0.10 percent of molybdenum, or 0.10 percent of niobium, or 0.15 percent vanadium, or 0.15 percent of zirconium. The description of carbon–quality is intended to identify carbon–quality products within the scope. The welded carbon–quality rectangular pipe and tube subject to this order is currently classified under the Harmonized Tariff Schedule of the United States (HTSUS) subheadings 7306.61.50.00 and 7306.61.70.60. While HTSUS subheadings are provided for convenience and CBP's customs purposes, our written description of the scope of the order is dispositive.

Final Results of Review

The Department has determined that the following margins exist for the period January 30, 2008, through April 30, 2009:

Manufacturer	Weighted Average Margin (percentage)
Tosçelik Profil Ve Sac Endustrisi A.S	0.00%

Assessment Rates

Pursuant to these final results, the Department has determined, and CBP shall assess, antidumping duties on all appropriate entries. The Department intends to issue assessment instructions for Toscelik to CBP 15 days after the date of publication of these final results. Pursuant to 19 CFR 351.212(b)(1), we calculated importer–specific (or customer–specific) *ad valorem* duty assessment rates based on the ratio of the total amount of the dumping margins calculated for the examined sales to the total entered value of those same sales. We will instruct CBP to assess antidumping duties on all appropriate entries covered by this review if any importer–specific (or customer–specific) assessment rate calculated in the final results of this review are above *de minimis*.

The Department clarified its "automatic assessment" regulation on May 6, 2003. *See Antidumping and Countervailing Duty Proceedings: Assessment of Antidumping Duties*, 68 FR 23954 (May 6, 2003) (*Assessment of Antidumping Duties*). This clarification will apply to entries of subject merchandise during the POR produced by Tosçelik for which Tosçelik did not know the merchandise was destined for the United States. In such instances, we will instruct CBP to liquidate un–reviewed entries at the 27.04 percent all–others rate from the LTFV investigation if there is no company–specific rate for an intermediary involved in the transaction. *See Notice of Antidumping Duty Order: Light–Walled Rectangular Pipe and Tube From Turkey*, 73 FR 31065 (May 30, 2008). *See Assessment of Antidumping Duties* for a full discussion of this clarification.

Cash Deposit Requirements

Furthermore, the following deposit requirements will be effective upon publication of these final results for all shipments of light–walled rectangular pipe and tube from Turkey entered, or withdrawn from warehouse, for consumption on or after the publication date of the final results of this administrative review, as provided by section 751(a)(1) of the Tariff Act: 1) the cash deposit rate for Toscelik Profil Ve Sac Endustrisi A.S. will be the rate established in the final results of review; 2) if the exporter is not a firm covered in this review or the less–than-fair–value (LTFV) investigation, but the manufacturer is, the cash deposit rate will be the rate established for the most recent period for the manufacturer of the merchandise; and 3) if neither the exporter nor the manufacturer is a firm covered in this or any previous review conducted by the Department, the cash deposit rate will be the all–others rate from the LTFV investigation. *Id.* These deposit requirements, when imposed, shall remain in effect until further notice.

Reimbursement of Duties

This notice also serves as a final reminder to importers of their responsibility under 19 CFR 351.402(f) to file a certificate regarding the reimbursement of antidumping duties prior to liquidation of the relevant entries during this POR. Failure to comply with this requirement could result in the Secretary's presumption that reimbursement of antidumping duties occurred and the subsequent assessment of doubled antidumping duties.

Administrative Protective Orders

This notice also serves as a reminder to parties subject to administrative protective orders (APO) of their responsibility concerning the return or destruction of proprietary information disclosed under APO in accordance with 19 CFR 351.305(a)(3), which continues to govern business proprietary information in this segment of the proceeding. Timely written notification of the return/destruction of APO materials or conversion to judicial protective order is hereby requested. Failure to comply with the regulations and terms of an APO is a violation which is subject to sanction.

We are issuing and publishing this notice in accordance with sections 751(a)(1) and 777(i) of the Tariff Act.

Dated: September 27, 2010.

Ronald K. Lorentzen,

Deputy Assistant Secretary for Import Administration.

[FR Doc. 2010–24831 Filed 10–1–10; 8:45 am]

BILLING CODE 3510–DS–S

DEPARTMENT OF COMMERCE

International Trade Administration

[A–557–813]

Polyethylene Retail Carrier Bags From Malaysia: Final Results of Antidumping Duty Administrative Review

AGENCY: Import Administration, International Trade Administration, Department of Commerce.

SUMMARY: On June 15, 2010, the Department published its preliminary results of the administrative review of the antidumping duty order on polyethylene retail carrier bags (PRCBs) from Malaysia. The review covers one manufacturer/exporter. The period of review is August 1, 2008, through July 31, 2009.

We gave interested parties an opportunity to comment on the preliminary results. We have made no changes to the margin calculation for the final results of this review. The final weighted-average margin is listed below in the "Final Results of the Review" section of this notice.

DATES: *Effective Date:* October 4, 2010.

FOR FURTHER INFORMATION CONTACT: Jerrold Freeman or Yang Chun, AD/CVD Operations, Office 5, Import Administration, International Trade Administration, U.S. Department of Commerce, 14th Street and Constitution Avenue, NW., Washington, DC 20230; telephone: (202) 482–0180 or (202) 482–5760, respectively.

SUPPLEMENTARY INFORMATION:

Background

On June 15, 2010, the Department published the preliminary results of review and invited parties to comment. *See Polyethylene Retail Carrier Bags From Malaysia: Preliminary Results of Antidumping Duty Administrative Review,* 75 FR 33772 (June 15, 2010) (*Preliminary Results*). Although we received comments from interested parties, those comments are no longer on the record of the review. *See* "Return of Comments" section below.

We have conducted this review in accordance with section 751(a) of the Tariff Act, as amended (the Act).

Scope of the Order

The merchandise subject to the antidumping duty order is PRCBs which may be referred to as t-shirt sacks, merchandise bags, grocery bags, or checkout bags. The subject merchandise is defined as non-sealable sacks and bags with handles (including drawstrings), without zippers or integral extruded closures, with or without gussets, with or without printing, of polyethylene film having a thickness no greater than 0.035 inch (0.889 mm) and no less than 0.00035 inch (0.00889 mm), and with no length or width shorter than 6 inches (15.24 cm) or longer than 40 inches (101.6 cm). The depth of the bag may be shorter than 6 inches (15.24 cm) but not longer than 40 inches (101.6 cm).

PRCBs are typically provided without any consumer packaging and free of charge by retail establishments, *e.g.,* grocery, drug, convenience, department, specialty retail, discount stores, and restaurants, to their customers to package and carry their purchased products. The scope of the order excludes (1) polyethylene bags that are not printed with logos or store names and that are closeable with drawstrings made of polyethylene film and (2) polyethylene bags that are packed in consumer packaging with printing that refers to specific end-uses other than packaging and carrying merchandise from retail establishments, *e.g.,* garbage bags, lawn bags, trash-can liners.

Imports of the subject merchandise are currently classifiable under statistical category 3923.21.0085 of the Harmonized Tariff Schedule of the United States (HTSUS). This subheading also covers products that are outside the scope of the order. Furthermore, although the HTSUS subheading is provided for convenience and customs purposes, the written description of the scope of the order is dispositive.

Return of Comments

On July 15, 2010, Target Corporation (Target), an importer of subject merchandise, filed a case brief. On July 16, 2010, Target filed a correction letter with respect to its July 15, 2010, case brief. On July 20, 2010, the petitioners [1] filed a rebuttal brief.

On August 4, 2010, we returned the July 15, 2010, case brief and July 16, 2010, correction letter to Target in accordance with 19 CFR 351.302(d) (see August 4, 2010, letter to Target). In our letter to Target, we stated that its case brief contained unsolicited and untimely new factual information and that we will not rely on the new factual information in the case brief and correction letter in making our final determination. See 19 CFR 351.104(a)(2). Accordingly, we provided Target an opportunity to refile its case brief omitting the new factual information. The deadline for Target to resubmit its case brief was August 10, 2010.

On August 5, 2010, we returned the July 20, 2010, rebuttal brief to the petitioners because in it they had referred to the new factual information Target raised improperly in its case brief and correction letter (*see* August 5, 2010, letter to the petitioners). In our letter, we provided the petitioners an opportunity to refile their rebuttal brief omitting the new factual information. The deadline for the petitioners to resubmit their rebuttal brief was August 11, 2010.

Target did not submit a revised case brief by the August 10 deadline. The petitioners did not submit a revised rebuttal brief by the August 11 deadline. *See* Memorandum to the File dated August 19, 2010.

Changes Since the Preliminary Results

Because the interested parties in this administrative review did not refile their respective case or rebuttal briefs, there are no comments to address concerning the Department's determination in the *Preliminary Results.* Therefore, we have made no changes to our determination to apply adverse facts available, as discussed in the *Preliminary Results* (75 FR at 33773–74), to Euro Plastics Malaysia Sdn. Bhd. (Euro Plastics).

Final Results of the Review

As a result of our review, we determine that a weighted-average dumping margin of 101.74 percent exists for Euro Plastics for the period August 1, 2008, through July 31, 2009.

Assessment Rates

Because we are relying on total adverse facts available to establish the dumping margin for Euro Plastics, we will instruct U.S. Customs and Border Protection (CBP) to apply a dumping margin of 101.74 percent to all entries of PRCBs from Malaysia that were produced and/or exported by Euro Plastics and entered, or withdrawn from warehouse, for consumption during the period of review.

The Department intends to issue appropriate assessment instructions to CBP 15 days after publication of these final results of review.

Cash-Deposit Requirements

The following cash-deposit requirements will be effective upon publication of this notice of final results of administrative review for all shipments of PRCBs from Malaysia entered, or withdrawn from warehouse, for consumption on or after the date of publication, as provided by section 751(a)(2)(C) of the Act: (1) The cash-deposit rate for Euro Plastics will be 101.74 percent; (2) for other previously reviewed or investigated companies, the cash-deposit rate will continue to be the company-specific rate published for the most recent period; (3) if the exporter is not a firm covered in this review, a prior review, or the less-than-fair-value investigation but the manufacturer is, the cash-deposit rate will be the rate established for the most recent period for the manufacturer of the merchandise; (4) if neither the exporter nor the manufacturer has its own rate, the cash-deposit rate will be 84.94 percent, the all-others rate established in the *Notice of Final Determination of Sales at Less Than Fair Value: Polyethylene Retail Carrier Bags From Malaysia,* 69 FR 34128 (June 18, 2004). These deposit requirements shall remain in effect until further notice.

Notification to Importers

This notice also serves as a final reminder to importers of their responsibility under 19 CFR 351.402(f) to file a certificate regarding the reimbursement of antidumping duties prior to liquidation of the relevant

[1] The Polyethylene Retail Carrier Bag Committee and its individual members, Hilex Poly Co., LLC, and Superbag Corporation.

entries during the period of review. Failure to comply with this requirement could result in the Department's presumption that reimbursement of antidumping duties occurred and the subsequent assessment of doubled antidumping duties. *See* 19 CFR 351.402(f)(3).

Notification Regarding APO

This notice also serves as a reminder to parties subject to the administrative protective order (APO) of their responsibility concerning the disposition of proprietary information disclosed under APO as explained in the APO itself. See also 19 CFR 351.305(a)(3). Timely written notification of the destruction of APO materials or conversion to judicial protective order is hereby requested. Failure to comply with the regulations and terms of an APO is a sanctionable violation.

We are publishing these final results of administrative review and notice in accordance with sections 751(a)(1) and 777(i)(1) of the Act and 19 CFR 351.221(b)(5).

Dated: September 27, 2010.

Ronald K. Lorentzen,

Deputy Assistant Secretary for Import Administration.

[FR Doc. 2010–24837 Filed 10–1–10; 8:45 am]

BILLING CODE 3510–DS–P

DEPARTMENT OF COMMERCE

International Trade Administration

[A–570–831]

Fresh Garlic From the People's Republic of China: Final Results of New Shipper Review

AGENCY: Import Administration, International Trade Administration, Department of Commerce.

SUMMARY: The Department of Commerce (Department) is conducting a new shipper review (NSR) of Qingdao Sea-line Trading Co. Ltd. (Qingdao Sea-line) under the antidumping duty order on fresh garlic from the People's Republic of China (PRC) covering the period of review (POR) of November 1, 2008 through April 30, 2009. As discussed below, we determine that a sale has been made in the United States at a price below normal value (NV) with respect to Qingdao Sea-line, an exporter who participated fully and demonstrated its eligibility for separate rate. *See Fresh Garlic From the People's Republic of China: Preliminary Results of New Shipper Review,* 75 FR 24578 (May 5, 2010) (*Preliminary Results*). We are continuing to find Qingdao Sea-line's sale to be *bona fide* for the final results of this review. We intend to instruct U.S. Customs and Border Protection (CBP) to assess antidumping duties on entries of subject merchandise during the POR for which importer-specific assessment rates are above *de minimis.*

DATES: *Effective Date*: October 4, 2010.

FOR FURTHER INFORMATION CONTACT: Scott Lindsay, AD/CVD Operations, Office 6, Import Administration, International Trade Administration, U.S. Department of Commerce, 14th Street and Constitution Avenue, NW., Washington, DC 20230; *telephone:* (202) 482–0780.

SUPPLEMENTARY INFORMATION:

Background

On May 5, 2010, the Department published in the **Federal Register** the preliminary results of the NSR of the antidumping duty order on fresh garlic from the PRC. *See Preliminary Results.* Since the *Preliminary Results,* the following events have occurred.

On May 21, 2010, the Department extended the deadline for filing case briefs. *See* Letter from the Department to All Interested Parties (May 21, 2010). On July 19, 2010, Qingdao Sea-line submitted a document on the record of this review that contained new factual information within the meaning of 19 CFR 351.301(b)(4) and 19 CFR 351.301 (c)(1). As a result, on July 23, 2010, the Department issued a letter to Qingdao Sea-line rejecting its July 19, 2010 submission. Also on July 23, 2010, the Department notified the parties of the briefing schedule for the final results. *See* Memorandum to the File, Antidumping Duty New Shipper Review of Fresh Garlic From the People's Republic of China: Briefing Schedule (July 23, 2010). On August 6, 2010, Qingdao Sea-line timely submitted its case brief and requested a hearing. On August 16, 2010, Petitioners [1] timely submitted their rebuttal brief.

On August 27, 2010, the Department placed on the record a memorandum indicating that, pursuant to a telephone discussion, Qingdao Sea-line was withdrawing its request for a hearing. *See* Memorandum to the File, Antidumping Duty New Shipper Review of Fresh Garlic From the People's Republic of China: Canceled Hearing Request (August 27, 2010).

[1] The Fresh Garlic Producers Association: Christopher Ranch L.L.C., the Garlic Company, Valley Garlic, and Vessey and Company, Inc. (collectively, Petitioners).

On September 3, 2010, as a result of the recent decision issued by the Court of Appeals for the Federal Circuit's (CAFC) ruling in *Dorbest Limited et al.* v. *United States,* 604 F.3d 1363 (Fed. Cir. 2010) (*Dorbest*), the Department placed a memorandum on the record regarding its reconsideration of its valuation of the labor wage rate for this review. The Department gave interested parties until September 15, 2010 to comment specifically to the proposed labor wage rate methodology. *See* Memorandum to the File, Fresh Garlic from the People's Republic of China: Wage Rate Data (September 3, 2010). The Department received no comments.

Scope of the Order

The products covered by this Order are all grades of garlic, whole or separated into constituent cloves, whether or not peeled, fresh, chilled, frozen, provisionally preserved, or packed in water or other neutral substance, but not prepared or preserved by the addition of other ingredients or heat processing. The differences between grades are based on color, size, sheathing, and level of decay. The scope of this order does not include the following: (a) Garlic that has been mechanically harvested and that is primarily, but not exclusively, destined for non-fresh use; or (b) garlic that has been specially prepared and cultivated prior to planting and then harvested and otherwise prepared for use as seed. The subject merchandise is used principally as a food product and for seasoning. The subject garlic is currently classifiable under subheadings 0703.20.0010, 0703.20.0020, 0703.20.0090, 0710.80.7060, 0710.80.9750, 0711.90.6000, and 2005.90.9700 of the Harmonized Tariff Schedule of the United States (HTSUS). Although the HTSUS subheadings are provided for convenience and customs purposes, our written description of the scope of this order is dispositive. In order to be excluded from the Order, garlic entered under the HTSUS subheadings listed above that is (1) mechanically harvested and primarily, but not exclusively, destined for non-fresh use or (2) specially prepared and cultivated prior to planting and then harvested and otherwise prepared for use as seed must be accompanied by declarations to CBP to that effect.

Analysis of Comments Received

Issues raised in the case and rebuttal briefs by parties to this proceeding and to which we have responded are listed in the Appendix to this notice and addressed in the Memorandum from Susan Kuhbach, Acting Deputy

Assistant Secretary for Import Administration, To Ronald K. Lorentzen, Deputy Assistant Secretary for Import Administration, Fresh Garlic from the People's Republic of China: Issues and Decision Memorandum of Qingdao Sea-line Trading Co. Ltd. (September 24, 2010) (*Issues and Decision Memorandum*), which is hereby adopted by this notice. Parties can find a complete discussion of the issues raised in this NSR and the corresponding recommendations in this public memorandum, which is on file in the Central Records Unit, Room 1117 of the main Department building. In addition, a copy of the *Issues and Decision Memorandum* can be accessed directly on our Web site at *http://www.trade.go/ia/*. The paper copy and electronic version of the *Issues and Decision Memorandum* are identical in content.

Bona Fides Analysis

While conducting a review, particularly a review where a company's margin would be based on a single sale, the Department examines price, quantity, and other circumstances associated with the sale under review, to determine if the sale was based on normal commercial considerations and presents an accurate representation of the company's normal business practices. If the Department determines that the price was not based on normal commercial considerations or is atypical of the respondent's normal business practices, including other sales of comparable merchandise, the sale may be considered non-*bona fide.*

In the *Preliminary Results,* the Department preliminarily found that Qingdao Sea-line's single POR sale was made on a *bona fide* basis. Based on our analysis of additional information placed on the record by Petitioners that we did not examine for the *Preliminary Results,* as well as comments made by interested parties, the Department continues to find that Qingdao Sea-line's sale was a *bona fide* sale. For a more detailed discussion of this analysis, please see the Department's accompanying *Issues and Decision Memorandum.*

Surrogate Country

Since the *Preliminary Results,* no interested party has commented on the selection of India as the surrogate country. Therefore, we continue to determine that India is the appropriate surrogate country for the final results of this NSR.

Separate Rates

The Department found in the *Preliminary Results* that Qingdao Sea-line demonstrated a lack of *de jure* and *de facto* government control with respect to its export activities, and preliminarily determined that it was eligible for a separate rate. No information has been placed on the record of this proceeding since the *Preliminary Results* to contradict our preliminary separate-rate determination. Therefore, for the final results, we continue to determine that Qingdao Sea-line is eligible for a separate rate.

Changes Since the Preliminary Results

Based on our analysis of information on the record of this review, and comments received from the interested parties, we have made changes to the surrogate values for garlic bulbs. In the *Preliminary Results,* the Department stated that it would subtract seven percent from the value of the average of Super-A grade garlic, in accordance with the fees noted by the Azapdur APMC price data used by the Department. *See* Preliminary Results of the 2008–2009 New Shipper Review of Fresh Garlic from the People's Republic of China: Surrogate Values (April 27, 2010) at 3. However, the Department instead used the average value inclusive of the seven percent. Therefore, for these final results, the Department is using the value for Super-A grade garlic, minus the seven percent in fees, as the surrogate value for garlic bulbs. *See Issues and Decision Memorandum* at Issue 2.

In addition, the Department has changed its wage rate calculation methodology for these final results. As a consequence of the CAFC ruling in *Dorbest,* the Department is no longer relying on the regression-based wage rate described in 19 CFR 351.408(c)(3). The Department is continuing to evaluate options for determining labor values in light of the recent CAFC decision. For these final results, we have calculated an hourly wage rate to use in valuing Qingdao Sea-line's reported labor input by averaging earnings and/or wages in countries that are economically comparable to the PRC and that are significant producers of comparable merchandise. The *Issues and Decision Memorandum* contains a more detailed explanation of this new methodology. *See Issues and Decision Memorandum* at Issue 5.

Final Results of New Shipper Review

As a result of our review, we determine that the following margin exists for the period November 1, 2008 through April 30, 2009:

FRESH GARLIC FROM THE PRC 11/1/2008–4/30/2009

New shipper review	
Exporter/manufacturer	Weighted-Average Margin(dollars per kilogram)
Exported by Qingdao Sea-line Trade Co. Ltd. and Produced by Jinxiang County Juxingyuan Trading Co., Ltd	$1.28/kg.

Disclosure

We will disclose the calculations used in our analysis to parties to these proceedings within five days of the date of publication of this notice. *See* 19 CFR 351.224(b).

Assessment Rates

Consistent with the final results of the 14th administrative review (AR), we will direct CBP to assess an importer-specific assessment rate based on the resulting per-unit (*i.e.,* per kilogram) amount on each entry of the subject merchandise during the POR. *See Fresh Garlic from the People's Republic of China: Final Results and Partial Rescission of the 14th Antidumping Duty Administrative,* 75 FR 34976, (June 21, 2010) (*14th AR*). Therefore, the Department will determine, and CBP shall assess, antidumping duties on all appropriate entries pursuant to section 751(a)(2)(A) of the Act and 19 CFR 351.212(b)(1). The Department intends to issue appropriate assessment instructions directly to CBP 15 days after publication of the final results of this review. For assessment purposes, we calculated importer-specific assessment rates for fresh garlic from the PRC. Specifically, we divided the total dumping margins for each importer by

the total quantity of subject merchandise sold to that importer during the POR to calculate a per-unit assessment amount. We will direct CBP to assess importer-specific assessment rates based on the resulting per-unit (*i.e.,* per kilogram) amount on each entry of the subject merchandise during the POR if any importer-specific assessment rate calculated in the final results of this review is above *de minimis.*

Cash Deposit Requirements

Consistent with the final results of the *14th AR,* we will collect a per kilogram cash-deposit amount. The following cash deposit requirements will be effective upon publication of the final results of this review for all shipments of the subject merchandise entered, or withdrawn from warehouse, for consumption on or after the publication date of the final results, as provided by section 751(a)(1) of the Act: (1) For subject merchandise produced by Jinxiang County Juxingyuan Trading Co., Ltd. (Juxingyuan) and exported by Qingdao Sea-line, the cash deposit rate will be the per-unit rate determined in the final results of this new shipper review; (2) for subject merchandise exported by Qingdao Sea-line but not produced by Juxingyuan, the cash deposit rate continues to be the per-unit PRC-wide rate. These requirements, when imposed, shall remain in effect until further notice.

Notification to Importers

This notice serves as a final reminder to importers of their responsibility under 19 CFR 351.402(f)(2) to file a certificate regarding the reimbursement of antidumping duties prior to liquidation of the relevant entries during this review period. Failure to comply with this requirement could result in the Secretary's presumption that reimbursement of antidumping duties occurred and the subsequent assessment of double antidumping duties.

Administrative Protective Orders

This notice also serves as a reminder to parties subject to administrative protective orders (APO) of their responsibility concerning the return or destruction of proprietary information disclosed under APO in accordance with 19 CFR 351.305, which continues to govern business proprietary information in this segment of the proceeding. Timely written notification of the return/destruction of APO materials or conversion to judicial protective order is hereby requested. Failure to comply with the regulations and terms of an APO is a violation which is subject to sanction.

This new shipper review and notice are issued and published in accordance with sections 751(a)(2)(B) and 777(i) of the Act and 19 CFR and 351.214.

Dated: September 24, 2010.

Ronald K. Lorentzen,

Deputy Assistant Secretary for Import Administration.

Appendix I

Issue 1: The Bona Fides of Qingdao Sea-line's Sale
Issue 2: Surrogate Valuation of Garlic Bulbs
Issue 3: Use of India Wholesale Price Index as Inflator for Surrogate Values
Issue 4: Financial Ratios
Issue 5: Wage Rates
Issue 6: Cold Storage

[FR Doc. 2010–24833 Filed 10–1–10; 8:45 am]

BILLING CODE 3510–DS–P

DEPARTMENT OF COMMERCE

International Trade Administration

[A–570–909]

Certain Steel Nails from the People's Republic of China: Initiation of Antidumping Duty New Shipper Review

AGENCY: Import Administration, International Trade Administration, Department of Commerce.

EFFECTIVE DATE: October 4, 2010.

SUMMARY: The Department of Commerce ("Department") has determined that a request for a new shipper review ("NSR") of the antidumping duty order on certain steel nails ("steel nails") from the People's Republic of China ("PRC"), received on August 27, 2010, meets the statutory and regulatory requirements for initiation. The period of review ("POR") for this NSR is August 1, 2009, through July 31, 2010.

FOR FURTHER INFORMATION CONTACT: Emeka Chukwudebe, AD/CVD Operations, Office 9, Import Administration, International Trade Administration, U.S. Department of Commerce, 14th Street and Constitution Avenue, NW, Washington, DC 20230; telephone: 202–482–0219.

SUPPLEMENTARY INFORMATION:

Background

The notice announcing the antidumping duty order on certain steel nails from the PRC was published in the **Federal Register** on August 1, 2008. *See Notice of Antidumping Duty Order: Certain Steel Nails From the People's Republic of China*, 73 FR 44961 (August 1, 2008) ("*Antidumping Duty Order*"). On August 27, 2010, pursuant to section 751(a)(2)(B)(i) of the Tariff Act of 1930, as amended ("Act"), and 19 CFR 351.214(c), the Department received a NSR request from Shanghai Colour Nail Co., Ltd. ("Shanghai Colour"). Shanghai Colour's request was properly made during August 2010, which is the annual anniversary of the *Antidumping Duty Order*. Shanghai Colour certified that it is the exporter and Wuxi Colour Nail Co., Ltd. ("Wuxi Colour") is the manufacturer of the subject merchandise upon which the request was based. Shanghai Colour also submitted a public version, which adequately summarized proprietary information and provided explanations as to why certain proprietary information is not capable of summarization.

Pursuant to section 751(a)(2)(B)(i)(I) of the Act and 19 CFR 351.214(b)(2)(ii), Shanghai Colour certified that it did not export steel nails to the United States during the period of investigation ("POI"); and Shanghai Colour provided a certification from Wuxi Colour that it did not export subject merchandise to the United States during the POI. In addition, pursuant to section 751(a)(2)(B)(i)(II) of the Act and 19 CFR 351.214(b)(2)(iii)(A), Shanghai Colour certified that, since the initiation of the investigation, it has never been affiliated with any Chinese exporter or producer who exported steel nails to the United States during the POI, including those not individually examined during the investigation. As required by 19 CFR 351.214(b)(2)(iii)(B), Shanghai Colour also certified that its export activities were not controlled by the central government of the PRC.

In addition to the certifications described above, pursuant to 19 CFR 351.214(b)(2)(iv), Shanghai Colour submitted documentation establishing the following: (1) the date on which Shanghai Colour first shipped steel nails for export to the United States and the date on which the steel nails were first entered, or withdrawn from warehouse, for consumption; (2) the volume of its first shipment; and (3) the date of its first sale to an unaffiliated customer in the United States.

The Department conducted U.S. Customs and Border Protection ("CBP") database queries in an attempt to confirm that Shanghai Colour's shipments of subject merchandise had entered the United States for consumption and that liquidation of such entries had been properly suspended for antidumping duties. The Department also examined whether the CBP data confirmed that such entries were made during the NSR POR. The information we examined was

consistent with that provided by Shanghai Colour.

Period of Review

In accordance with 19 CFR 351.214(g)(1)(i)(A), the POR for a new shipper review initiated in the month immediately following the anniversary month will be the twelve-month period immediately preceding the anniversary month. Therefore, under this order, the POR is August 1, 2009, through July 31, 2010. The sales and entries into the United States of subject merchandise exported by Shanghai Colour and produced by Wuxi Colour occurred during this twelve-month POR. Therefore, the POR for this new shipper is August 1, 2009, through July 31, 2010.

Initiation of New Shipper Reviews

Pursuant to section 751(a)(2)(B) of the Act and 19 CFR 351.214, the Department finds that Shanghai Colour meets the threshold requirements for initiation of a NSR for the shipment of steel nails from the PRC produced by Wuxi Colour and exported by Shanghai Colour. *See* "Memorandum to the File From Emeka Chukwudebe, Case Analyst, New Shipper Initiation Checklist: Certain Steel Nails from the People's Republic of China (A–570–909)," dated concurrently with this notice.

The Department intends to issue the preliminary results of this NSR no later than 180 days from the date of initiation, and the final results no later than 90 days from the issuance of the preliminary determination. *See* section 751(a)(2)(B)(iv) of the Act.

It is the Department's usual practice, in cases involving non–market economies, to require that a company seeking to establish eligibility for an antidumping duty rate separate from the country–wide rate provide evidence of *de jure* and *de facto* absence of government control over the company's export activities. Accordingly, we will issue a questionnaire to Shanghai Colour which will include a section requesting information with regard to Shanghai Colour's export activities for separate rates purposes. The review will proceed if the response provides sufficient indication that Shanghai Colour is not subject to either *de jure* or *de facto* government control with respect to its export of subject merchandise.

We will instruct CBP to allow, at the option of the importer, the posting, until the completion of the review, of a bond or security in lieu of a cash deposit for each entry of the subject merchandise from Shanghai Colour in accordance with section 751(a)(2)(B)(iii) of the Act and 19 CFR 351.214(e). Because Shanghai Colour certified that its subject merchandise was produced by Wuxi Colour, we will apply the bonding privilege to Shanghai Colour only for subject merchandise produced by Wuxi Colour.

Interested parties requiring access to proprietary information in this NSR should submit applications for disclosure under administrative protective order in accordance with 19 CFR 351.305 and 19 CFR 351.306. This initiation and notice are in accordance with section 751(a)(2)(B) of the Act and 19 CFR 351.214 and 19 CFR 351.221(c)(1)(i).

Dated: September 28, 2010.

Susan H. Kuhbach,

Acting Deputy Assistant Secretary for Antidumping and Countervailing Duty Operations.

[FR Doc. 2010–24835 Filed 10–1–10; 8:45 am]

BILLING CODE 3510–DS–S

DEPARTMENT OF COMMERCE

National Oceanic and Atmospheric Administration

RIN 0648–XZ31

Endangered Species; File No. 14176

AGENCY: National Marine Fisheries Service (NMFS), National Oceanic and Atmospheric Administration (NOAA), Commerce.

ACTION: Issuance of permit.

SUMMARY: Notice is hereby given that Michael Mangold (Permit Holder and Principal Investigator), United States Fish and Wildlife Service's Maryland Fishery Resource Office, 177 Admiral Cochrane Drive, Annapolis, MD 21401 has been issued a permit to take shortnose sturgeon for purposes of scientific research.

ADDRESSES: The permit and related documents are available for review upon written request or by appointment in the following offices:

Permits, Conservation and Education Division, Office of Protected Resources, NMFS, 1315 East-West Highway, Room 13705, Silver Spring, MD 20910; phone (301)713–2289; fax (301)713–0376;

Northeast Region, NMFS, 55 Great Republic Drive, Gloucester, MA 01930; phone (978)281–9328; fax (978)281–9394.

FOR FURTHER INFORMATION CONTACT: Colette Cairns or Malcolm Mohead, (301)713–2289.

SUPPLEMENTARY INFORMATION: On March 19, 2010, notice was published in the **Federal Register** (75 FR 13256) that a request for a scientific research permit to take shortnose sturgeon had been submitted by the above-named Michael Mangold, U.S. Fish and Wildlife Service. The requested permit has been issued under the authority of the Endangered Species Act of 1973, as amended (ESA; 16 U.S.C. 1531 *et seq.*) and the regulations governing the taking, importing, and exporting of endangered and threatened species (50 CFR parts 222–226).

The applicant is authorized to conduct a five-year scientific study determining biological and life history information on shortnose sturgeon in the Potomac River. The permit authorizes non-lethal sampling with anchored gill nets, capturing up to 30 fish annually. Each fish will be captured, weighed, measured, PIT and Floy tagged, and sampled for genetic tissue analysis. A sub-set of 10 fish will be acoustically tagged, 5 internally and 5 externally, released, and tracked, determining seasonal movement and habitat selection. Additionally, the applicant is authorized to use D-nets lethally collecting up to 20 shortnose sturgeon in early life stages annually to estimate spawning success and periodicity.

Issuance of this permit, as required by the ESA, was based on a finding that such permit: (1) was applied for in good faith; (2) will not operate to the disadvantage of such endangered or threatened species; and (3) is consistent with the purposes and policies set forth in section 2 of the ESA.

Dated: September 27, 2010.

P. Michael Payne,

Chief, Permits, Conservation and Education Division, Office of Protected Resources, National Marine Fisheries Service.

[FR Doc. 2010–24822 Filed 10–1–10; 8:45 am]

BILLING CODE 3510–22–S

DEPARTMENT OF COMMERCE

National Oceanic and Atmospheric Administration

RIN 0648–XZ15

Marine Mammals and Endangered Species; File Nos. 808–1735, 14233, 14506, 14603, and 14726

AGENCY: National Marine Fisheries Service (NMFS), National Oceanic and Atmospheric Administration (NOAA), Commerce.

ACTION: Notice; issuance of permits and permit amendment.

SUMMARY: Notice is hereby given that NMFS has issued four permits and a permit amendment to conduct research

on marine mammals or sea turtles. See **SUPPLEMENTARY INFORMATION** for additional information regarding permittees.

ADDRESSES: The permits and related documents are available for review upon written request or by appointment in the following offices: See **SUPPLEMENTARY INFORMATION**.

FOR FURTHER INFORMATION CONTACT: The following Analysts at (301)713–2289. For File Nos. 808–1735, 14233 and 14603: Amy Hapeman or Kristy Beard; File Nos. 14506 and 14726: Amy Hapeman or Colette Cairns.

SUPPLEMENTARY INFORMATION: On March 11, 2010, notice was published in the **Federal Register** (75 FR 11516) that a request for a permit amendment to conduct research on Arnoux's beaked whales (*Berardius arnouxii*) had been submitted by Andrew Read, Ph.D. [File No. 808–1735]. On September 10, 2009, notice was published in the **Federal Register** (74 FR 46570) that a request for a permit to conduct research on North Atlantic right whales (Eubalaena glacialis) had been submitted by Scott D. Kraus, Ph.D. [File No. 14233]. On December 16, 2009, notice was published in the **Federal Register** (74 FR 66618) that a request for a permit to conduct research on green (*Chelonia mydas*), hawksbill (*Eretmochelys imbricata*), Kemp's ridley (*Lepidochelys kempii*), loggerhead (*Caretta caretta*), and leatherback (*Dermochelys coriacea*) sea turtles had been submitted by Llewellyn Ehrhart, Ph.D. [File No. 14506]. On October 26, 2009, notice was published in the **Federal Register** (74 FR 54959) that a request for a permit to conduct research on North Atlantic right whales had been submitted by the Provincetown Center for Coastal Studies (CCS) [Responsible Party: Richard Delaney; File No. 14603]. On October 21, 2009, notice was published in the **Federal Register** (74 FR 54021) that a request for a permit to conduct research on green, hawksbill, Kemp's ridley, loggerhead, and leatherback sea turtles had been submitted by Blair Witherington [File No. 14726]. The requested permits and permit amendment have been issued under the following authorities as applicable: the Marine Mammal Protection Act of 1972, as amended (16 U.S.C. 1361 *et seq.*), the regulations governing the taking and importing of marine mammals (50 CFR part 216), the Endangered Species Act of 1973, as amended (ESA; 16 U.S.C. 1531 *et seq.*), and the regulations governing the taking, importing, and exporting of endangered and threatened species (50 CFR parts 222–226).

Andrew Read, Ph.D. [File No. 808–1735], Duke University Marine Laboratory, 135 Pivers Island Road, Beaufort, North Carolina 28516, was issued an amendment to Permit No. 808–1735, originally issued on June 27, 2007 (72 FR 36429). Permit No. 808–1735 authorizes Dr. Read to take humpback (*Megaptera novaeangliae*), blue (*Balaenoptera musculus*), fin (*B. physalus*), sei (*B. borealis*), and Antarctic minke (B. bonaerensis) whales in the Southern Ocean to examine their foraging behavior relative to krill patches. The permit authorizes the close approach of whales during vessel surveys for photo-identification, behavioral observation, tracking, and incidental harassment. A subset of whales may be suction-cup tagged during surveys. This amendment, Permit No. 808–1735–01, authorizes researchers to take Arnoux's beaked whales during vessel surveys in the Southern Ocean for photo-identification, behavioral observation, and incidental harassment and suction-cup tag a subset of animals. The purpose of the research is to gain information on the distribution, biology, ecology, movement patterns, and behavior of this extremely rare species and generate a catalog of known individuals that can then be used for a mark-recapture experiment. The amendment is valid until the permit expires May 31, 2012.

Scott Kraus, Ph.D. [File No. 14233], New England Aquarium Edgerton Research Laboratory, Central Wharf, Boston, Massachusetts, 02110, was issued a five-year permit to study North Atlantic right whales along the U.S. East Coast from Florida to Maine via aerial and vessel surveys. During vessel surveys, researchers may approach, photograph and collect fecal samples from whales and biopsy sample a subset of animals. Researchers also may import and export biological samples, including samples and tissues from dead right whales in other parts of the world to use in control and comparative studies.

Llewellyn Ehrhart, Ph.D. [File No. 14506], University of Central Florida, P.O. Box 162368, Orlando, Florida 32816, was issued a five-year permit to continue long-term studies of sea turtle populations in three disparate habitats on Florida's Atlantic coast: the Indian River Lagoon System, the Sabellariid worm rock reefs of Indian River County, and the Trident Turning Basin, Cape Canaveral Air Force Station. Researchers may capture, flipper tag, passive integrated transponder (PIT) tag, measure, weigh, blood sample, tissue biopsy, lavage, photograph, temporarily mark and/or remove epibiota from loggerhead, green, Kemp's ridley, hawksbill, and leatherback sea turtles. A subset of green sea turtles may have a transmitter attached to the carapace.

CCS [File No. 14603], 115 Bradford Street, Provincetown, Massachusetts 02657, was issued a five year permit to harass right whales year-round to monitor demographics, life history traits, habitat use, and behavior in the Gulf of Maine; the majority of effort will be focused in Cape Cod Bay, Massachusetts Bay, and the Great South Channel during the season of right whale residency (December 15 - May 15). Researchers are authorized to approach whales during aerial surveys and by vessel for photo-identification, direct observation, collection of prey, and to attach suction cup tags to adult or juvenile right whales. Other large whale species may be incidentally harassed during aerial and vessel surveys, and opportunistic sighting information and photographs may be collected.

Blair Witherington [File No. 14726], Florida Fish and Wildlife Conservation Commission, 9700 South A1A, Melbourne Beach, Florida, 32951, was issued a five-year permit to locate and describe areas of the Atlantic Ocean and Gulf of Mexico near Florida that serve as developmental habitat for pelagic-stage juvenile and neonate loggerhead, green, Kemp's ridley, hawksbill, and leatherback sea turtles, to quantify threats to pelagic sea turtles, and to gather information on their life-history, genetics, movements, behavior, and diet. Researchers are authorized to capture by dip net, flipper tag, PIT tag, measure, weigh, and oral swab loggerhead, green, Kemp's ridley, hawksbill, and leatherback sea turtles. A subset of animals may be skin biopsied, lavaged or have a satellite tag attached.

In compliance with the National Environmental Policy Act of 1969 (42 U.S.C. 4321 *et seq.*), environmental assessments (EAs) were prepared analyzing the effects of the permitted activities on the human environment. Based on the analyses in the EAs, NMFS determined that issuance of the permits and permit amendment would not significantly impact the quality of the human environment and that preparation of an environmental impact statement was not required. That determination is documented in Findings of No Significant Impact (FONSI) for these actions.

As required by the ESA, issuance of the permits were based on a finding that such permits: (1) were applied for in good faith; (2) will not operate to the disadvantage of such endangered species; and (3) are consistent with the

purposes and policies set forth in section 2 of the ESA.

Documents may be reviewed in the following locations:

Permits, Conservation and Education Division, Office of Protected Resources, NMFS, 1315 East-West Highway, Room 13705, Silver Spring, Maryland 20910; phone (301)713–2289; fax (301)713–0376;

Southwest Region, NMFS, 501 West Ocean Blvd., Suite 4200, Long Beach, California 90802–4213; phone (562)980–4001; fax (562)980–4018;

Northeast Region, NMFS, 55 Great Republic Drive, Gloucester, Massachusetts 01930; phone (978)281–9328; fax (978)281–9394; and

Southeast Region, NMFS, 263 13th Avenue South, Saint Petersburg, Florida 33701; phone (727)824–5312; fax (727)824–5309.

Dated: September 27, 2010.

P. Michael Payne,

Chief, Permits, Conservation and Education Division, Office of Protected Resources, National Marine Fisheries Service.

[FR Doc. 2010–24823 Filed 10–1–10; 8:45 am]

BILLING CODE 3510–22–S

DEPARTMENT OF DEFENSE

Office of the Secretary

[Docket ID: DOD–2010–OS–0138]

Privacy Act of 1974; System of Records

AGENCY: Department of Defense (DoD).

ACTION: Notice to alter a system of records.

SUMMARY: The Office of the Secretary of Defense proposes to alter a system of records in its inventory of record systems subject to the Privacy Act of 1974 (5 U.S.C. 552a), as amended.

DATES: This proposed action would be effective without further notice on November 3, 2010, unless comments are received which result in a contrary determination.

ADDRESSES: You may submit comments, identified by docket number and title, by any of the following methods:

* *Federal Rulemaking Portal: http://www.regulations.gov.* Follow the instructions for submitting comments.

* *Mail:* Federal Docket Management System Office, Room 3C843 Pentagon, 1160 Defense Pentagon, Washington, DC 20301–1160.

Instructions: All submissions received must include the agency name and docket number for this **Federal Register** document. The general policy for comments and other submissions from members of the public is to make these submissions available for public viewing on the Internet at *http://www.regulations.gov* as they are received without change, including any personal identifiers or contact information.

FOR FURTHER INFORMATION CONTACT: Ms. Cindy Allard at (703) 588–6830.

SUPPLEMENTARY INFORMATION: The Office of the Secretary of Defense notices for systems of records subject to the Privacy Act of 1974 (5 U.S.C. 552a), as amended, have been published in the **Federal Register** and are available from the Chief, OSD/JS Privacy Office, Freedom of Information Directorate, Washington Headquarters Services, 1155 Defense Pentagon, Washington, DC 20301–1155.

The proposed system report, as required by 5 U.S.C. 552a(r) of the Privacy Act of 1974, as amended, was submitted on September 21, 2010, to the House Committee on Oversight and Government Reform, the Senate Committee on Governmental Affairs, and the Office of Management and Budget (OMB) pursuant to paragraph 4c of Appendix I to OMB Circular No. A–130, "Federal Agency Responsibilities for Maintaining Records About Individuals," dated February 8, 1996 (February 20, 1996; 61 FR 6427).

Dated: September 29, 2010.

Mitchell S. Bryman,

Alternate OSD Federal Register Liaison Officer, Department of Defense.

DTIC 01

SYSTEM NAME:

Defense User Registration System (DURS) Records (November 12, 2008; 73 FR 66852).

Changes

* * * * *

CATEGORIES OF RECORDS IN THE SYSTEM:

Delete entry and replace with "Information relating to registration requests by individuals seeking access to DTIC-owned or controlled computers, databases, products, and/or services. The records contain the individual's name; Electronic Data Interchange Personal Identifier; citizenship; service type; personnel category; organization/company mailing address/physical location; e-mail address; registrants' USERID; password/reset questions; organization/company telephone number(s); access eligibility; dissemination/distribution group codes; and personal and facility security clearance level(s). The records also contain the government approving official's name, office phone number and e-mail address; dates of registration's activation and the projected date of expiration. Where applicable, the records contain contract number(s), contract expiration date(s), and the Military Critical Technical Data Agreement (MCTDA) Certification Number."

AUTHORITY FOR MAINTENANCE OF THE SYSTEM:

Delete entry and replace with "5 U.S.C. 301, Departmental Regulations; E.O. 12958, Classified National Security Information; DoD 5200.1–R, Information Security Program; and Defense Information Systems Agency Instruction 240–110–8, Information Security Program."

* * * * *

SAFEGUARDS:

Delete entry and replace with "Records are maintained in secure, limited access, or monitored areas. Database is monitored and access is password protected and Common Access Card (CAC) enabled. Physical entry by unauthorized persons is restricted through the use of locks, guards, passwords, or other administrative procedures. Archived data is stored on discs or magnetic tapes which are kept in a locked or controlled access area. Access to personal information is limited to those individuals who require the records to perform their official assigned duties."

RETENTION AND DISPOSAL:

Delete entry and replace with "Electronic records are to be deleted when DTIC determines they are no longer needed for administrative, audit, legal or operational purposes."

* * * * *

NOTIFICATION PROCEDURES:

Delete entry and replace with "Individuals seeking to determine whether this system of records contains information about themselves may address their inquiries to Defense Technical Information Center; ATTN: DTIC–BC (Registration Team), 8725 John J. Kingman Road, Suite 0944, Fort Belvoir VA 22060–6218.

Requests should contain the individual's full name, telephone number, street address, and e-mail address."

RECORD ACCESS PROCEDURES:

Delete entry and replace with "Individuals seeking to access records about themselves contained in this system of records should address written inquiries to the Privacy Act Officer, Defense Technical Information Center, 8725 John J. Kingman Road,

Suite 0944, Fort Belvoir, VA 22060–6218.

Requests should contain the individual's full name, telephone number, street address, and e-mail address."

* * * * *

RECORD SOURCE CATEGORIES:

Delete entry and replace with "Individuals and security personnel."

* * * * *

DTIC 01

SYSTEM NAME:

Defense User Registration System (DURS) Records

SYSTEM LOCATION:

Defense Technical Information Center (DTIC), Directorate of User Services, Marketing and Registration Division, ATTN: DTIC–BC (Registration), 8725 John J. Kingman Road, Suite 0944, Fort Belvoir, VA 22060–6218.

CATEGORIES OF INDIVIDUALS COVERED BY THE SYSTEM:

DoD and other U.S. Federal Government agency military and civilian personnel and their contractors; researchers of colleges or universities funded by DoD or other U.S. Federal Government agencies; students and employees of specifically qualifying educational institutions, Groups, and Programs, *e.g.,* Historically Black Colleges, Universities, and Minority Institutions (HBCU/MI), Hispanic Serving Institutions (HSIs), and University Research Support (URS); awardees under the Multidisciplinary University Research Initiative (MURI); awardees and researchers eligible for awards under the Defense Experimental Program to Stimulate Competitive Research (DEPSCOR); designated officials and employees of foreign embassies; and members of Small Business Innovative Research (SBIR) Organizations/Groups.

CATEGORIES OF RECORDS IN THE SYSTEM:

Information relating to registration requests by individuals seeking access to DTIC-owned or controlled computers, databases, products, and/or services. The records contain the individual's name; Electronic Data Interchange Personal Identifier; citizenship; service type; personnel category; organization/company mailing address/physical location; e-mail address; registrants' USERID; password/reset questions; organization/company telephone number(s); access eligibility; dissemination/distribution group codes; and personal and facility security clearance level(s). The records also contain the government approving official's name, office phone number and e-mail address; dates of registration's activation and the projected date of expiration. Where applicable, the records contain contract number(s), contract expiration date(s), and the Military Critical Technical Data Agreement (MCTDA) Certification Number.

AUTHORITY FOR MAINTENANCE OF THE SYSTEM:

5 U.S.C. 301, Departmental Regulations; E.O. 12958, Classified National Security Information; DoD 5200.1–R, Information Security Program; and Defense Information Systems Agency Instruction 240–110–8, Information Security Program.

PURPOSE(S):

The purpose of this system of records is to collect, validate eligibility, and maintain an official registry file that identifies individuals and organizations who apply for, and are granted, access privileges to DTIC products, services and electronic information systems.

ROUTINE USES OF RECORDS MAINTAINED IN THE SYSTEM, INCLUDING CATEGORIES OF USERS AND THE PURPOSES OF SUCH USES:

In addition to those disclosures generally permitted under 5 U.S.C. 552a(b) of the Privacy Act of 1974, these records contained may specifically be disclosed outside the DoD as a routine use pursuant to 552a(b)(3) as follows:

The DoD 'Blanket Routine Uses' set forth at the beginning of the OSD's compilation of systems of records notices apply to this system.

POLICIES AND PRACTICES FOR STORING, RETRIEVING, ACCESSING, RETAINING, AND DISPOSING OF RECORDS IN THE SYSTEM:

STORAGE:

Electronic storage media.

RETRIEVABILITY:

Individual name, e-mail address, and security clearance level.

SAFEGUARDS:

Records are maintained in secure, limited access, or monitored areas. Database is monitored and access is password protected and Common Access Card (CAC) enabled. Physical entry by unauthorized persons is restricted through the use of locks, guards, passwords, or other administrative procedures. Archived data is stored on discs or magnetic tapes which are kept in a locked or controlled access area. Access to personal information is limited to those individuals who require the records to perform their official assigned duties.

RETENTION AND DISPOSAL:

Electronic records are to be deleted when DTIC determines they are no longer needed for administrative, audit, legal or operational purposes.

SYSTEM MANAGER(S) AND ADDRESS:

The Chief, Marketing and Registration Division, DTIC–BC, 8725 John J. Kingman Road, Suite 0944, Fort Belvoir, VA 22060–6218.

NOTIFICATION PROCEDURES:

Individuals seeking to determine whether this system of records contains information about themselves may address their inquiries to Defense Technical Information Center; ATTN: DTIC–BC (Registration Team), 8725 John J. Kingman Road, Suite 0944, Fort Belvoir VA 22060–6218.

Requests should contain the individual's full name, telephone number, street address, and e-mail address.

RECORD ACCESS PROCEDURES:

Individuals seeking to access records about themselves contained in this system of records should address written inquiries to the Privacy Act Officer, Defense Technical Information Center, 8725 John J. Kingman Road, Suite 0944, Fort Belvoir, VA 22060–6218.

Requests should contain the individual's full name, telephone number, street address, and e-mail address.

CONTESTING RECORD PROCEDURES:

The OSD rules for accessing records, for contesting contents and appealing initial agency determinations are published in OSD Administrative Instruction 81; 32 CFR part 311; or may be obtained from the system manager.

RECORD SOURCE CATEGORIES:

Individuals and security personnel.

EXEMPTIONS CLAIMED FOR THE SYSTEM:

None.

[FR Doc. 2010–24842 Filed 10–1–10; 8:45 am]

BILLING CODE 5001–06–P

DEPARTMENT OF EDUCATION

Notice of Proposed Information Collection Requests

AGENCY: Department of Education.

ACTION: Comment Request.

SUMMARY: The Department of Education (the Department), in accordance with the Paperwork Reduction Act of 1995 (PRA) (44 U.S.C. 3506(c)(2)(A)), provides the general public and Federal

agencies with an opportunity to comment on proposed and continuing collections of information. This helps the Department assess the impact of its information collection requirements and minimize the reporting burden on the public and helps the public understand the Department's information collection requirements and provide the requested data in the desired format. The Director, Information Collection Clearance Division, Regulatory Information Management Services, Office of Management, invites comments on the proposed information collection requests as required by the Paperwork Reduction Act of 1995.

DATES: Interested persons are invited to submit comments on or before December 3, 2010.

ADDRESSES: Comments regarding burden and/or the collection activity requirements should be electronically mailed to *ICDocketMgr@ed.gov* or mailed to U.S. Department of Education, 400 Maryland Avenue, SW., LBJ, Washington, D.C. 20202–4537. Please note that written comments received in response to this notice will be considered public records.

SUPPLEMENTARY INFORMATION: Section 3506 of the Paperwork Reduction Act of 1995 (44 U.S.C. Chapter 35) requires that Federal agencies provide interested parties an early opportunity to comment on information collection requests. The Director, Information Collection Clearance Division, Regulatory Information Management Services, Office of Management, publishes this notice containing proposed information collection requests at the beginning of the Departmental review of the information collection. The Department of Education is especially interested in public comment addressing the following issues: (1) Is this collection necessary to the proper functions of the Department; (2) will this information be processed and used in a timely manner; (3) is the estimate of burden accurate; (4) how might the Department enhance the quality, utility, and clarity of the information to be collected; and (5) how might the Department minimize the burden of this collection on the respondents, including through the use of information technology.

Dated: September 29, 2010.

Darrin A. King,

Director, Information Collection Clearance Division, Regulatory Information Management Services, Office of Management.

Institute of Education Sciences

Type of Review: New.

Title of Collection: School Improvement Status and Outcomes for Students with Disabilities Study.

OMB Control Number: Pending.

Agency Form Number(s): N/A.

Frequency of Responses: One time.

Affected Public: Individuals or households State, Local, or Tribal Government, State Educational Agencies or Local Education Agencies.

Total Estimated Number of Annual Responses: 13,276.

Total Estimated Number of Annual Burden Hours: 1,660.

Abstract: As part of the National Assessment of the Individuals with Disabilities Education Act of 2004 (Pub. L. 108–446), the Institute of Education Sciences is evaluating how schools being required to adopt programs focused on improving academic outcomes for students with disabilities. The focus of the study is examining trends in achievement among students with disabilities in both schools that are and are not accountable for the performance of those students. In addition, the study focuses on describing improvement efforts in schools that have failed to make adequate yearly progress for students with disabilities in particular grades and subjects. The evaluation will use EdFacts data as well as data from surveys of school principals and special education designees about their school improvement practices. The study will use descriptive statistics and regression analysis to study how student outcomes and school practices vary with the identification of elementary and middle schools for improvement.

Requests for copies of the proposed information collection request may be accessed from *http://edicsweb.ed.gov,* by selecting the "Browse Pending Collections" link and by clicking on link number 4411. When you access the information collection, click on "Download Attachments" to view. Written requests for information should be addressed to U.S. Department of Education, 400 Maryland Avenue, SW., LBJ, Washington, DC 20202–4537. Requests may also be electronically mailed to *ICDocketMgr@ed.gov* or faxed to 202–401–0920. Please specify the complete title of the information collection and OMB Control Number when making your request.

Individuals who use a telecommunications device for the deaf (TDD) may call the Federal Information Relay Service (FIRS) at 1–800–877–8339.

[FR Doc. 2010–24786 Filed 10–1–10; 8:45 am]

BILLING CODE 4000–01–P

DEPARTMENT OF EDUCATION

Notice of Submission for OMB Review

AGENCY: Department of Education.

ACTION: Comment request.

SUMMARY: The Director, Information Collection Clearance Division, Regulatory Information Management Services, Office of Management invites comments on the submission for OMB review as required by the Paperwork Reduction Act of 1995 (Pub. L. 104–13).

DATES: Interested persons are invited to submit comments on or before November 3, 2010.

ADDRESSES: Written comments should be addressed to the Office of Information and Regulatory Affairs, Attention: Education Desk Officer, Office of Management and Budget, 725 17th Street, NW., Room 10222, New Executive Office Building, Washington, DC 20503, be faxed to (202) 395–5806 or e-mailed to *oira_submission@omb.eop.gov* with a cc: to *ICDocketMgr@ed.gov*. Please note that written comments received in response to this notice will be considered public records.

SUPPLEMENTARY INFORMATION: Section 3506 of the Paperwork Reduction Act of 1995 (44 U.S.C. Chapter 35) requires that the Office of Management and Budget (OMB) provide interested Federal agencies and the public an early opportunity to comment on information collection requests. The OMB is particularly interested in comments which: (1) Evaluate whether the proposed collection of information is necessary for the proper performance of the functions of the agency, including whether the information will have practical utility; (2) Evaluate the accuracy of the agency's estimate of the burden of the proposed collection of information, including the validity of the methodology and assumptions used; (3) Enhance the quality, utility, and clarity of the information to be collected; and (4) Minimize the burden of the collection of information on those who are to respond, including through the use of appropriate automated, electronic, mechanical, or other technological collection techniques or other forms of information technology.

Dated: September 27, 2010.

Darrin A. King,

Director, Information Collection Clearance Division, Regulatory Information Management Services, Office of Management.

Office of Postsecondary Education

Type of Review: Extension.

Title of Collection: Annual Performance Report and Certification of

Financial Need for the Jacob K. Javits Fellowship Program.

OMB Control Number: 1840–0630.

Agency Form Number(s): ED 40–1304.

Frequency of Responses: Annually.

Affected Public:

Not-for-profit institutions.

Total Estimated Number of Annual Responses: 100.

Total Estimated Annual Burden Hours: 400.

Abstract: The Jacob K. Javits Fellowship Program is authorized by Title VII, Part A, Subpart 1 of the Higher Education Act of 1965, as amended, and provides up to four years of financial assistance to students to undertake graduate study at the doctoral and Master of Fine Arts level in selected fields of arts, humanities, and social sciences. Fellows are selected on the basis of (1) superior academic ability demonstrated by their achievements and exceptional promise; and (2) financial need. The amounts of new and continuing awards are based on a student's financial need as determined by the Title IV, Part F needs analysis system. Each individual fellow's need must be assessed and reported each year, along with a continuing fellow's academic progress as determined by the institution. This collection is completed annually by grantee institutions to report on the fellows' progress and levels of financial need for the next academic year. The Department of Education uses this data to calculate fellowship amounts and the total grant amount sent to each institution for each fiscal year.

Requests for copies of the information collection submission for OMB review may be accessed from the RegInfo.gov Web site at *http://www.reginfo.gov/public/do/PRAMain* or from the Department's Web site at *http://edicsweb.ed.gov,* by selecting the "Browse Pending Collections" link and by clicking on link number 4358. When you access the information collection, click on "Download Attachments " to view. Written requests for information should be addressed to U.S. Department of Education, 400 Maryland Avenue, SW., LBJ, Washington, DC 20202–4537. Requests may also be electronically mailed to the Internet address *ICDocketMgr@ed.gov* or faxed to 202–401–0920. Please specify the complete title of the information collection and OMB Control Number when making your request.

Individuals who use a telecommunications device for the deaf (TDD) may call the Federal Information Relay Service (FIRS) at 1–800–877–8339.

[FR Doc. 2010–24785 Filed 10–1–10; 8:45 am]

BILLING CODE 4000–01–P

DEPARTMENT OF EDUCATION

Committee on Measures of Student Success

AGENCY: National Center for Education Statistics, Institute of Education Sciences, Department of Education.

ACTION: Notice of an open meeting.

SUMMARY: This notice sets forth the schedule and proposed agenda of an upcoming meeting of the Committee on Measures of Student Success (Committee). The notice also describes the functions of the Committee. The notice also describes the functions of the Committee. Notice of this meeting is required by section 10(a)(2) of the Federal Advisory Committee Act (FACA) and is intended to notify the public of their opportunity to attend.

DATES: October 20, 2010.

Time: 12:30 p.m. to 4:30 p.m.

ADDRESSES: The Committee will meet in Washington, DC at 1990 K Street, NW., Washington, DC 20006, 8th Floor Conference Center.

FOR FURTHER INFORMATION CONTACT: Archie Cubarrubia, Designated Federal Official, Advisory Committee on Measures of Student Success, U.S. Department of Education, 1990 K Street, NW., Washington, DC 20006. E-mail: *Archie.Cubarrubia@ed.gov.* Telephone: (202) 502–7601.

SUPPLEMENTARY INFORMATION: The Committee is established to advise the Secretary of Education in assisting two-year degree-granting institutions of higher education in meeting the completion or graduation rate disclosure requirements outlined in section 485 of the HEA, as amended. Specifically, the Committee shall develop recommendations regarding the accurate calculation and reporting of completion or graduation rates of entering certificate/degree-seeking, full-time, undergraduate students by two-year degree granting institutions of higher education. The Committee may also recommend additional or alternative measures of student success that are comparable alternatives to the completion or graduation rates of entering degree-seeking full-time undergraduate students and that consider the mission and role of two-year degree granting higher education institutions. These recommendations shall be provided to the Secretary no later than 18 months after the first meeting of the Committee.

The agenda for the Committee's first meeting will include a welcome by Department officials followed by a roundtable discussion focusing on the strategies for accomplishing its mission as stated in its charter. The agenda will also include brief panel presentations about current efforts in the field regarding improving completion or graduation rates and alternative measures of student success.

Individuals interested in attending the meeting must register in advance because of limited space issues. Please contact Kristan Cilente at (202) 219–7001 or by e-mail at *studentsuccess@ed.gov*. Individuals who will need accommodations for a disability in order to attend the meeting (*e.g.,* interpreting services, assistive listening devices, or materials in alternative format) should notify Kristan Cilente at (202) 219–7001 no later than October 13, 2010. We will attempt to meet requests for accommodations after this date but cannot guarantee their availability. The meeting site is accessible to individuals with disabilities.

Opportunities for public comment are available through the Committee's Web site at *http://www2.ed.gov/about/bdscomm/list/acmss.html*. Records are kept of all Committee proceedings and are available for public inspection on the Web site and at the National Center for Education Statistics, 1990 K Street, NW., Washington, DC 20006 from the hours of 9 a.m. to 5 p.m. E.S.T.

Electronic Access to This Document: You may view this document, as well as all other documents of this Department published in the **Federal Register**, in text or Adobe Portable Document Format (PDF) on the Internet at the following site: *http://www.ed.gov/news/fed-register/index.html*. To use PDF you must have Adobe Acrobat Reader, which is available free at this site. If you have questions about using PDF, call the U.S. Government Printing Office (GPO), toll free at 1–866–512–1830; or in the Washington, DC, area at (202) 512–0000.

Note: The official version of this document is the document published in the **Federal Register**. Free Internet access to the official edition of the **Federal Register** and the Code of Federal Regulations is available on GPO Access at: *http://www.gpoaccess.gov/nara/index.html.*

John Q. Easton,

Director, Institute of Education Sciences.

[FR Doc. 2010–24782 Filed 10–1–10; 8:45 am]

BILLING CODE 4000–01–P

DEPARTMENT OF ENERGY

Blue Ribbon Commission on America's Nuclear Future, Reactor and Fuel Cycle Technology Subcommittee

AGENCY: Department of Energy, Office of Nuclear Energy.

ACTION: Notice of Open Meeting.

SUMMARY: This notice announces an open meeting of the Reactor and Fuel Cycle Technology (RFCT) Subcommittee. The RFCT Subcommittee is a subcommittee of the Blue Ribbon Commission on America's Nuclear Future (the Commission). The establishment of subcommittees is authorized in the Commission's charter. The Commission was organized pursuant to the Federal Advisory Committee Act (Pub. L. 92–463, 86 Stat. 770) (the Act). This notice is provided in accordance with the Act.

DATES: Tuesday, October 12, 2010, 8:15 a.m.–4 p.m.

ADDRESSES: Washington Marriott at Metro Center, 775 12th Street, NW., Washington, DC 20005.

FOR FURTHER INFORMATION CONTACT: Timothy A. Frazier, Designated Federal Officer, U.S. Department of Energy, 1000 Independence Avenue, SW., Washington, DC 20585; telephone (202) 586–4243 or facsimile (202) 586–0544; e-mail *CommissionDFO@nuclear.energy.gov.* Additional information will be available at *http://www.brc.gov.*

SUPPLEMENTARY INFORMATION: *Background:* The President directed that the Commission be established to conduct a comprehensive review of policies for managing the back end of the nuclear fuel cycle. The Commission will provide advice and make recommendations on issues including alternatives for the storage, processing, and disposal of civilian and defense spent nuclear fuel and nuclear waste.

The Co-chairs of the Commission requested the formation of the RFCT Subcommittee to answer the question: "[d]o technical alternatives to today's once-through fuel cycle offer sufficient promise to warrant serious consideration and R&D investment, and do these technologies hold significant potential to influence the way in which used fuel is stored and disposed?"

Purpose of the Meeting: The meeting will primarily focus on the evaluation of advantages and disadvantages of adopting new fuel cycle technologies and the associated waste management implications of these technologies. The meeting will also address proliferation and security risks associated with new fuel cycle technologies.

Tentative Agenda: The meeting is expected to start at 8:15 a.m. on October 12 with panel presentations beginning at 8:30 a.m. and ending at 3:15 p.m. A public comment period is planned from 3:15 p.m. to 4 p.m.

Public Participation: Subcommittee meetings are not required to be open to the public; however, the Commission has elected to open the presentation sessions of the meeting to the public. Individuals and representatives of organizations who would like to offer comments and suggestions may do so at the end of the public session on Tuesday, October 12, 2010. Approximately 45 minutes will be reserved for public comments from 3:15 p.m. to 4 p.m. Time allotted per speaker will depend on the number who wish to speak but will not exceed 5 minutes. The Designated Federal Officer is empowered to conduct the meeting in a fashion that will facilitate the orderly conduct of business. Those wishing to speak should register to do so beginning at 8:30 a.m. on October 12, 2010, at the Washington Marriott at Metro Center. Registration to speak will close at 11 a.m., October 12, 2010.

Those not able to attend the meeting or have insufficient time to address the subcommittee are invited to send a written statement to Timothy A. Frazier, U.S. Department of Energy, 1000 Independence Avenue, SW., Washington, DC 20585; e-mail to *CommissionDFO@nuclear.energy.gov,* or post comments on the Commission Web site at *http://www.brc.gov.*

Additionally, the meeting will be available via live video webcast. The link will be available at *http://www.brc.gov.* This notice is being published less than 15 days before the date of the meeting due to programmatic issues.

Minutes: The minutes of the meeting will be available at *http://www.brc.gov* or by contacting Mr. Frazier. He may be reached at the postal address or email address above.

Issued in Washington, DC on September 28, 2010.

LaTanya R. Butler,

Acting Deputy Committee Management Officer.

[FR Doc. 2010–24813 Filed 10–1–10; 8:45 am]

BILLING CODE 6450–01–P

ENVIRONMENTAL PROTECTION AGENCY

[EPA–HQ–ORD–2010–0622; FRL–9209–5]

Board of Scientific Counselors (BOSC); Request for Nominations of Experts

AGENCY: Environmental Protection Agency (EPA).

ACTION: Notice.

SUMMARY: The EPA Board of Scientific Counselors (BOSC) Staff Office is requesting public nominations for technical experts to fill current vacancies on the BOSC Executive Committee. Nominations should be submitted via the BOSC Web site at *http://www.epa.gov/osp/bosc/nomination.htm.*

DATES: Nominations should be submitted by November 15, 2010, per instructions below.

FOR FURTHER INFORMATION CONTACT: Any member of the public needing further information regarding this Notice and Request for Nominations may contact Ms. Heather Drumm, Mail Code 8104–R, Office of Science Policy, Office of Research and Development, Environmental Protection Agency, 1200 Pennsylvania Avenue, NW., Washington, DC 20460; via phone/voice mail at: (202) 564–8239; via fax at: (202) 565–2911; or via e-mail at: *drumm.heather@epa.gov.* General information concerning the Board of Scientific Counselors can be found at the BOSC Web site at: *http://www.epa.gov/osp/bosc.*

SUPPLEMENTARY INFORMATION:

Background

The BOSC is a chartered Federal Advisory Committee that was established by the U.S. EPA to provide independent scientific and technical peer review, advice, consultation, and recommendations about the Office of Research and Development. As a Federal Advisory Committee, the BOSC conducts business in accordance with the Federal Advisory Committee Act (FACA) (5 U.S.C. App. 2) and related regulations.

The BOSC Executive Committee is comprised of approximately 20 members who are recognized experts in various scientific and engineering fields. EPA is soliciting candidates to fill several vacancies. EPA will consider candidates from the environmental scientific/technical fields, human health care professionals, academia, industry, public and private research institutes or organizations, non-government organizations, and other relevant

interest areas. Members of the BOSC serve as special government employees. The Executive Committee meets approximately three to five times per year in face-to-face meetings and via teleconferences.

Request for Nominations

EPA's BOSC Staff Office is seeking nominations of nationally and internationally recognized scientists, engineers, and social scientists having experience and expertise in one or more of the following areas: Ecology (aquatic and terrestrial); toxicology (environmental and developmental); informatics (ecosystem and bioinformatics); socioeconomics; environmental justice, science policy (research, policy, and outcomes interface); endocrine disrupting chemicals; climate change (environmental and human health impacts and carbon sequestration); sustainability (systems engineering, life-cycle assessment, green chemistry/technology); risk assessment (human health and ecological); and risk management.

Process and Deadline for Submitting Nominations

Any interested person or organization may nominate themselves or qualified individuals in the areas of expertise described above. Nominations should be submitted via the BOSC Web site (which is preferred over hard copy) at *http://www.epa.gov/osp/bosc/nomination.htm.* Nominations should be submitted in time to arrive no later than November 15, 2010. To receive full consideration, nominations should include all of the information requested. EPA's BOSC Staff Office requests: contact information about the person making the nomination; contact information about the nominee; the disciplinary and specific areas of expertise of the nominee; the nominee's curriculum vita and/or resume; sources of recent grant and/or contract support; and a biographical sketch of the nominee indicating current position, educational background, and recent service on other national advisory committees or national professional organizations. Persons having questions about the nomination procedures, or who are unable to submit nominations through the BOSC web site, should contact Ms. Heather Drumm, as indicated above in this notice.

For the EPA BOSC Staff Office, a balanced committee includes candidates who possess the necessary domains of knowledge, the relevant scientific perspectives (which, among other factors, can be influenced by work history and affiliation), and the collective breadth of experience to adequately address the charge. Selection criteria to be used for membership include: (a) Scientific and/or technical expertise, knowledge, and experience (primary factors); (b) availability and willingness to serve; (c) absence of financial conflicts of interest; (d) absence of an appearance of a lack of impartiality; (e) skills working on committees, subcommittees and advisory panels; and (f) diversity of expertise and viewpoints. EPA values and welcomes diversity. In an effort to obtain nominations of diverse candidates, EPA encourages nominations of women and men of all racial and ethnic groups.

The BOSC Staff Office's evaluation of an absence of financial conflicts of interest will include a review of the "Confidential Financial Disclosure Form for Special Government Employees Serving on Federal Advisory Committees at the U.S. Environmental Protection Agency" (EPA Form 3110–48). This confidential form allows Government Officials to determine whether there is a statutory conflict between that person's public responsibilities (which includes membership on an EPA Federal advisory committee) and private interests and activities, or the appearance of a lack of impartiality, as defined by Federal regulation. The form may be viewed and downloaded from the following URL address *http://www.epa.gov/sab/pdf/epaform3110–48.pdf.*

Dated September 28, 2010.

Mimi Dannel.

Acting Director, Office of Science Policy .

[FR Doc. 2010–24805 Filed 10–1–10; 8:45 am]

BILLING CODE 6560–50–P

FEDERAL COMMUNICATIONS COMMISSION

[CC Docket No. 92–237; DA 10–1799]

Next Meeting of the North American Numbering Council

AGENCY: Federal Communications Commission.

ACTION: Notice.

SUMMARY: The Commission released a public notice announcing the meeting and agenda of the North American Numbering Council (NANC). The intended effect of this action is to make the public aware of the NANC's next meeting and agenda.

DATES: Friday, October 22, 2010, 9:30 a.m.

ADDRESSES: Requests to make an oral statement or provide written comments to the NANC should be sent to Deborah Blue, Competition Policy Division, Wireline Competition Bureau, Federal Communications Commission, Portals II, 445 Twelfth Street, SW., Room 5–C162, Washington, DC 20554.

FOR FURTHER INFORMATION CONTACT: Deborah Blue, Special Assistant to the Designated Federal Officer (DFO) at (202) 418–1466 or *Deborah.Blue@fcc.gov.* The fax number is: (202) 418–1413. The TTY number is: (202) 418–0484.

SUPPLEMENTARY INFORMATION: This is a summary of the Commission's document in CC Docket No. 92–237, DA 10–1799 released September 23, 2010. The complete text in this document is available for public inspection and copying during normal business hours in the FCC Reference Information Center, Portals II, 445 12th Street, SW., Room CY–A257, Washington, DC 20554. The document may also be purchased from the Commission's duplicating contractor, Best Copy and Printing, Inc., 445 12th Street, SW., Room CY–B402, Washington, DC 20554, telephone (800) 378–3160 or (202) 863–2893, facsimile (202) 863–2898, or via the Internet at *http://www.bcpiweb.com.* It is available on the Commission's Web site at *http://www.fcc.gov.*

The North American Numbering Council (NANC) has scheduled a meeting to be held Friday, October 22, 2010, from 9:30 a.m. until 5 p.m. The meeting will be held at the Federal Communications Commission, Portals II, 445 Twelfth Street, SW., Room TW–C305, Washington, DC. This meeting is open to members of the general public. The FCC will attempt to accommodate as many participants as possible. The public may submit written statements to the NANC, which must be received two business days before the meeting. In addition, oral statements at the meeting by parties or entities not represented on the NANC will be permitted to the extent time permits. Such statements will be limited to five minutes in length by any one party or entity, and requests to make an oral statement must be received two business days before the meeting. People with Disabilities: To request materials in accessible formats for people with disabilities (braille, large print, electronic files, audio format), send an e-mail to *fcc504@fcc.gov* or call the Consumer and Governmental Affairs Bureau at 202–418–0530 (voice), 202–418–0432 (tty). Reasonable accommodations for people with disabilities are available upon request. Include a description of

the accommodation you will need, including as much detail as you can. Also include a way we can contact you if we need more information. Please allow at least five days advance notice; last minute requests will be accepted, but may be impossible to fill.

Proposed Agenda: Friday, October 22, 2010, 9:30 a.m.*

1. Announcements and Recent News.
2. Approval of Transcript—Meeting of May 21, 2010.
3. Report from the North American Numbering Plan Billing and Collection (NANP B&C) Agent.
4. Report of the Billing and Collection Working Group (B&C WG).
5. Report of the North American Numbering Plan Administrator (NANPA).
6. Report of the National Thousands Block Pooling Administrator (PA).
7. Report of the Local Number Portability Administration (LNPA) Working Group.
8. Report of North American Portability Management LLC (NAPM LLC).
9. Report of the Telcordia Dispute Resolution Team: Telcordia Appeal.
10. Report of the Numbering Oversight Working Group.
11. Status of the Industry Numbering Committee (INC) activities.
12. Report of the Future of Numbering Working Group (FoN WG).
13. Summary of Action Items.
14. Public Comments and Participation (5 minutes per speaker).
15. Other Business.

Adjourn no later than 5 p.m.

*The Agenda may be modified at the discretion of the NANC Chairman with the approval of the DFO.

Federal Communications Commission.

Marilyn Jones,

Attorney, Wireline Competition Bureau.

[FR Doc. 2010–24850 Filed 10–1–10; 8:45 am]

BILLING CODE 6712–01–P

FEDERAL TRADE COMMISSION

[File No. 101 0107]

In the Matter of The Coca-Cola Company; Analysis of Agreement Containing Consent Order to Aid Public Comment

AGENCY: Federal Trade Commission.

ACTION: Proposed Consent Agreement.

SUMMARY: The consent agreement in this matter settles alleged violations of federal law prohibiting unfair or deceptive acts or practices or unfair methods of competition. The attached Analysis of Agreement Containing Consent Order to Aid Public Comment describes both the allegations in the draft complaint and the terms of the consent order — embodied in the consent agreement — that would settle these allegations.

DATES: Comments must be received on or before October 27, 2010.

ADDRESSES: Interested parties are invited to submit written comments electronically or in paper form. Comments should refer to "The Coca-Cola Company, File No. 101 0107" to facilitate the organization of comments. Please note that your comment — including your name and your state — will be placed on the public record of this proceeding, including on the publicly accessible FTC website, at (*http://www.ftc.gov/os/publiccomments.shtm*).

Because comments will be made public, they should not include any sensitive personal information, such as an individual's Social Security Number; date of birth; driver's license number or other state identification number, or foreign country equivalent; passport number; financial account number; or credit or debit card number. Comments also should not include any sensitive health information, such as medical records or other individually identifiable health information. In addition, comments should not include any "[t]rade secret or any commercial or financial information which is obtained from any person and which is privileged or confidential. . . .," as provided in Section 6(f) of the FTC Act, 15 U.S.C. 46(f), and Commission Rule 4.10(a)(2), 16 CFR 4.10(a)(2). Comments containing material for which confidential treatment is requested must be filed in paper form, must be clearly labeled "Confidential," and must comply with FTC Rule 4.9(c), 16 CFR 4.9(c).[1]

Because paper mail addressed to the FTC is subject to delay due to heightened security screening, please consider submitting your comments in electronic form. Comments filed in electronic form should be submitted by using the following weblink: (*https://ftcpublic.commentworks.com/ftc/coca-cola*) and following the instructions on the web-based form. To ensure that the Commission considers an electronic comment, you must file it on the web-based form at the weblink: (*https://ftcpublic.commentworks.com/ftc/coca-cola*). If this Notice appears at (*http://www.regulations.gov/search/index.jsp*), you may also file an electronic comment through that website. The Commission will consider all comments that regulations.gov forwards to it. You may also visit the FTC website at (*http://www.ftc.gov/*) to read the Notice and the news release describing it.

A comment filed in paper form should include the "The Coca-Cola Company, File No. 101 0107" reference both in the text and on the envelope, and should be mailed or delivered to the following address: Federal Trade Commission, Office of the Secretary, Room H-135 (Annex D), 600 Pennsylvania Avenue, NW, Washington, DC 20580. The FTC is requesting that any comment filed in paper form be sent by courier or overnight service, if possible, because U.S. postal mail in the Washington area and at the Commission is subject to delay due to heightened security precautions.

The Federal Trade Commission Act ("FTC Act") and other laws the Commission administers permit the collection of public comments to consider and use in this proceeding as appropriate. The Commission will consider all timely and responsive public comments that it receives, whether filed in paper or electronic form. Comments received will be available to the public on the FTC website, to the extent practicable, at (*http://www.ftc.gov/os/publiccomments.shtm*). As a matter of discretion, the Commission makes every effort to remove home contact information for individuals from the public comments it receives before placing those comments on the FTC website. More information, including routine uses permitted by the Privacy Act, may be found in the FTC's privacy policy, at (*http://www.ftc.gov/ftc/privacy.shtm*).

FOR FURTHER INFORMATION CONTACT: Jill Frumin, (202-326-2758), Bureau of Competition, 600 Pennsylvania Avenue, NW, Washington, D.C. 20580.

SUPPLEMENTARY INFORMATION: Pursuant to section 6(f) of the Federal Trade Commission Act, 38 Stat. 721, 15 U.S.C. 46(f), and § 2.34 the Commission Rules of Practice, 16 CFR 2.34, notice is hereby given that the above-captioned consent agreement containing a consent order to cease and desist, having been filed with and accepted, subject to final approval, by the Commission, has been placed on the public record for a period of thirty (30) days. The following Analysis of Agreement Containing Consent Order to Aid Public Comment describes the terms of the consent

[1] The comment must be accompanied by an explicit request for confidential treatment, including the factual and legal basis for the request, and must identify the specific portions of the comment to be withheld from the public record. The request will be granted or denied by the Commission's General Counsel, consistent with applicable law and the public interest. *See* FTC Rule 4.9(c), 16 CFR 4.9(c).

agreement, and the allegations in the complaint. An electronic copy of the full text of the consent agreement package can be obtained from the FTC Home Page (for September 27, 2010), on the World Wide Web, at (*http://www.ftc.gov/os/actions.shtm*). A paper copy can be obtained from the FTC Public Reference Room, Room 130-H, 600 Pennsylvania Avenue, NW, Washington, D.C. 20580, either in person or by calling (202) 326-2222.

Public comments are invited, and may be filed with the Commission in either paper or electronic form. All comments should be filed as prescribed in the **ADDRESSES** section above, and must be received on or before the date specified in the **DATES** section.

Analysis of Agreement Containing Consent Order to Aid Public Comment

I. Introduction

The Federal Trade Commission ("Commission") has accepted, subject to final approval, an Agreement Containing Consent Order from Respondent The Coca-Cola Company ("TCCC") to address concerns in connection with TCCC's acquisition of its largest bottler and the subsequent exclusive license from Dr Pepper Snapple Group, Inc. ("DPSG"), to bottle, distribute, and sell the Dr Pepper, Diet Dr Pepper, and Canada Dry carbonated soft drink brands of DPSG in certain territories. The Consent Agreement, among other things, requires that TCCC limit the persons within the company who have access to the commercially sensitive confidential information that DPSG may provide to TCCC to carry out the distribution functions contemplated by the license.

The DPSG-TCCC license agreement followed TCCC's announced proposed acquisition of the North American business of its largest bottler, Coca-Cola Enterprises Inc. ("CCE"). CCE is licensed by TCCC and DPSG to bottle and distribute many of their carbonated soft drink brands. Following the acquisition, TCCC, through its subsidiary Coca-Cola Refreshments U.S.A., Inc. ("CCR"), will take on the bottling and distribution functions previously performed in the United States by CCE.

The Complaint alleges that TCCC's access to DPSG's commercially sensitive confidential marketing and brand plans, without adequate safeguards to ensure that TCCC will not misuse the information, could lead to anticompetitive conduct that would make DPSG a less effective competitor and/or facilitate coordination in the industry. The proposed Consent Agreement remedies this concern by limiting access to the DPSG commercially sensitive information to TCCC employees who perform traditional carbonated soft drink "bottler functions" formerly performed by CCE and not permitting access to TCCC employees involved in traditional "concentrate-related functions."

II. Respondent The Coca-Cola Company

TCCC is a corporation organized, existing, and doing business under and by virtue of the laws of the State of Delaware, with its office and principal place of business located at 1 Coca-Cola Plaza, Atlanta, Georgia 30313. It is the world's largest soft drink company and makes or licenses more than 3,000 drinks under 500 brand names in 200 countries. In 2009, TCCC's worldwide revenues from the sale of all products were about $31 billion.

III. Licensor Dr Pepper Snapple Group, Inc.

DPSG is a corporation organized, existing, and doing business under and by virtue of the laws of the State of Delaware, with its office and principal place of business located at 5301 Legacy Drive, Plano, Texas 75024. Among other things, DPSG produces the concentrate for the DPSG carbonated soft drink brands that are distributed by its bottlers. Some of these brands are Dr Pepper, Diet Dr Pepper, Crush, Canada Dry, Schweppes, Vernor's, A&W Root Beer, 7-UP, RC Cola, Sunkist, and Squirt. In 2009, DPSG's net sales were about $5.5 billion, and its United States net sales of carbonated soft drink concentrate were about $1.1 billion. Dr Pepper Seven Up, Inc., will sign the license with TCCC.

IV. The Bottler

A. Coca-Cola Enterprises Inc.

CCE is a corporation organized, existing and doing business under and by virtue of the laws of the State of Delaware, with its principal place of business located at 2500 Windy Ridge Parkway Suite 700, Atlanta, Georgia 30039. It is the largest TCCC bottler in North America, spanning 46 states and the District of Columbia. In 2009, CCE's sales of carbonated soft drinks totaled about $21 billion. CCE's North American business operations contributed 70% of this revenue. CCE accounts for about 75-80% of TCCC's North America bottler-distributed volume, and TCCC products represent over 90% of CCE's total volume.

V. The Transactions

A. The Bottler Acquisition

On February 25, 2010, TCCC reached an agreement with CCE to acquire the North American assets of CCE for $12.3 billion. At the time of the agreement, TCCC owned about 34% of CCE. Post-acquisition, the North American operations of CCE will be subsumed within a new organization known as Coca-Cola Refreshments USA, Inc. ("CCR"). CCR's business will comprise CCE's current North American operations, and CCR also will have responsibility for the supply chain for still beverages and juices, fountain/Freestyle, and national key customer management. Post-acquisition, Coca-Cola USA will manufacture and supply concentrate and engage in consumer brand marketing and innovation with respect to new drinks and brands.

B. The DPSG-TCCC License Agreement

Following the agreement to acquire CCE, TCCC sought a license to continue to bottle and distribute the DPSG brands that CCE had distributed. (The DPSG license held by CCE was terminated by DPSG as a result of the proposed acquisition.) In the DPSG-CCR license agreement, TCCC agreed to bottle and distribute DPSG's Dr Pepper brand products and Canada Dry products in the former CCE territories, where CCE had been producing and distributing these products. TCCC to agreed to pay DPSG $715 million for a non-exclusive license to produce and an exclusive, twenty-year[2] license to distribute and sell those brands.

Under the license agreement, CCR has agreed, among other things to, (a) distribute the Dr Pepper brand in all classes of trade based on certain TCCC brands; (b) grow the Dr Pepper brand based in some measure on certain sales criteria of other bottlers; and (c) advertise, promote, and market the Dr Pepper brand and provide sales support for such promotions, based in some measure on CCR's advertising, promotions, and marketing of certain TCCC brands.

C. The DPSG-CCR Freestyle Agreement

TCCC also will give Dr Pepper access to TCCC's new proprietary "Freestyle" fountain dispensing equipment. The Freestyle machine has a footprint comparable to a traditional lever-based fountain dispenser, but it allows users to create more than 120 custom-flavored beverages. DPSG values the Freestyle

[2] The license agreement is for an initial term of twenty (20) years, with automatic renewal for additional twenty (20) year periods, unless terminated pursuant to its terms.

Participation Agreement at approximately $115 million.

VI. The Proposed Complaint

The Commission's Complaint alleges that TCCC and DPSG are direct competitors in the highly concentrated and difficult to enter (a) branded concentrate and (b) branded direct-store-delivered carbonated soft drink markets. The concentrate market is national, and the branded soft drink markets are local. Total United States sales of concentrate is about $9 billion, and total United States sales of carbonated soft drinks, measured at retail, is about $70 billion.

To carry out the distribution activities currently undertaken by the bottler and contemplated under the license agreement, DPSG will need to provide commercially sensitive confidential information about its marketing plans to CCR, the newly created TCCC bottler subsidiary. DPSG currently provides this sort of information to CCE in order for it to perform its bottler or distribution functions. The Commission is concerned that TCCC's access to this information could enable it to use the information in ways that could impair DPSG's ability to compete and ultimately injure competition by weakening a competitor or facilitating coordination in the industry. The Complaint alleges that TCCC's access to DPSG's confidential information could eliminate competition between TCCC and DPSG, increase the likelihood that TCCC may unilaterally exercise market power, and facilitate coordinated interaction in the industry.

VII. The Proposed Consent Order

Under the proposed Consent Order, to remedy the alleged competitive concern associated with access to the DPSG commercially sensitive confidential information, TCCC will be required to set up a "firewall" to ensure that persons at TCCC who may be in a position to use the DPSG commercially sensitive information in ways that may injure DPSG and/or facilitate coordination will not be allowed access to such information. Persons at TCCC who are assigned to perform traditional "bottler functions"– the kinds of functions that CCE have historically performed for DPSG – will be permitted access to the DPSG information. Persons responsible for "concentrate-related functions"– the kinds of functions that TCCC engaged in as a competitor of DPSG when both had their brands distributed by CCE – will not be permitted access to the DPSG information.

The proposed Consent Agreement provides for the appointment of a monitor to assure TCCC's compliance with the Consent Order. The monitor will have a fiduciary responsibility to the Commission. The monitor will be appointed for a five (5) year term, but the Commission may extend or modify the term as appropriate.

The proposed Consent Agreement contains a prior notice provision for subsequent acquisitions by TCCC of its franchised bottlers that also are licensed to distribute DPSG products. Under the order, TCCC will be required to give the Commission forty-five (45) advance notice of a proposed acquisition that is not subject to the Hart-Scott-Rodino Act and provide the Commission with all management documents relating to the proposed acquisition. If the 45-day period expires without Commission action, TCCC will be permitted to consummate the proposed acquisition and use DPSG confidential information in the territories of the newly acquired bottler as specified in this order. The standard Hart-Scott-Rodino procedures and time periods would continue to apply for Hart-Scott-Rodino reportable transactions.

The order, like the DPSG-TCCC license agreement, will have a term of twenty (20) years.

VIII. Opportunity for Public Comment

The Consent Agreement has been placed on the public record for thirty (30) days for receipt of comments from interested persons. Comments received during this period will become part of the public record. After thirty days, the Commission will again review the proposed Consent Agreement, as well as the comments received, and will decide whether it should withdraw from the Consent Agreement or make final the Decision and Order.

By accepting the Consent Agreement subject to final approval, the Commission anticipates that the competitive problem alleged in the Complaint will be resolved. The purpose of this analysis is to invite and facilitate public comment concerning the Consent Agreement. It is not intended to constitute an official interpretation of the proposed Consent Agreement, nor is it intended to modify the terms of the Decision and Order in any way.

By direction of the Commission, Commissioner Ramirez recused.

Donald S. Clark,

Secretary.

[FR Doc. 2010–24838 Filed 10–1–10; 12:10 pm]

BILLING CODE 6750–01–S

GOVERNMENT ACCOUNTABILITY OFFICE

Financial Management and Assurance; Government Auditing Standards

Correction

In notice document 2010–23374 beginning on page 57274 in the issue of Monday, September 20, 2010 make the following corrections:

1. On page 57275, in the first column, under the **ADDRESSES** section, in the second line, "(GAO–1O–853G)" should read "(GAO–10–853G)".

2. On the same page, in the same column, under the **ADDRESSES** section, in the third and fourth lines, "*http://www.gao.gov/govaud/vbkO1.htm.*" should read "*http://www.gao.gov/govaud/ybk01.htm.*".

3. On the same page, in the same column, under the **SUPPLEMENTARY INFORMATION** section, in the seventh line, "*yeJlowbookgao.gov*" should read "*yellowbook@gao.gov.*"

[FR Doc. C1–2010–23374 Filed 10–1–10; 8:45 am]

BILLING CODE 1505–01–D

DEPARTMENT OF HEALTH AND HUMAN SERVICES

Meeting of the Advisory Committee on Blood Safety and Availability

AGENCY: Office of the Assistant Secretary for Health, Office of the Secretary, Department of Health and Human Services.

ACTION: Notice.

SUMMARY: As stipulated by the Federal Advisory Committee Act, the U.S. Department of Health and Human Services is hereby giving notice that the Advisory Committee on Blood Safety and Availability (ACBSA) will hold a meeting. The meeting will be open to the public.

DATES: The meeting will take place Thursday, November 4, and Friday, November 5, 2010, from 8:30 a.m. to 5 p.m.

ADDRESSES: The Universities at Shady Grove, 9630 Gudelsky Drive, Rockville, Maryland 20850, Phone: 301–738–6000.

FOR FURTHER INFORMATION CONTACT: Jerry A. Holmberg, PhD, Executive Secretary, Advisory Committee on Blood Safety and Availability, Office of the Assistant Secretary for Health, Department of Health and Human Services, 1101 Wootton Parkway, Suite 250, Rockville, MD 20852, (240) 453–8803, FAX (240) 453–8456, e-mail *ACBSA@hhs.gov.*

SUPPLEMENTARY INFORMATION: The Advisory Committee on Blood Safety

and Availability provides advice to the Secretary and the Assistant Secretary for Health on a range of policy issues that includes (1) definition of public health parameters around safety and availability of the blood supply and blood products, (2) broad public health, ethical and legal issues related to transfusion and transplantation safety, and (3) the implications for safety and the availability of various economic factors affecting product cost and supply.

In keeping with its established mission, the ACBSA will be asked to review and comment on previous ACBSA recommendations including elements of a strategic plan for transfusion and transplantation safety. The review is intended to align the transfusion and transplantation safety initiatives to the Secretary's Strategic Initiatives and Key Inter-Agency Collaborations: (*http://www.hhs.gov/secretary/about/secretarialstrategicinitiatives2010.pdf*).

The Committee will also be asked to comment and make recommendations on prioritizing previous and outstanding recommendations in light of the Assistant Secretary for Health's mission statement: "Mobilizing Leadership in Science and Prevention for a Healthier Nation" and strategic priorities: Creating Better Systems of Prevention; Eliminating Health Disparities and Achieving Health Equity; and Making Healthy People Come Alive for all Americans.

The public will have opportunity to present their views to the Committee on both meeting days. A public comment session has been scheduled for November 5, 2010. Comments will be limited to five minutes per speaker and must be pertinent to the discussion. Pre-registration is required for participation in the public comment session. Any member of the public who would like to participate in this session is encouraged to contact the Executive Secretary at his/her earliest convenience to register for time (limited to 5 minutes) and registration must be prior to close of business on November 3, 2010. It is requested that those who wish to have printed material distributed to the Committee provide thirty (30) copies of the document to the Executive Secretary, ACBSA, prior to close of business on November 3, 2010. If it is not possible to provide 30 copies of the material to be distributed, then individuals are requested to provide at a minimum one (1) copy of the document(s) to be distributed prior to the close of business on November 3, 2010. It also is requested that any member of the public who wishes to provide comments to the Committee utilizing electronic data projection submit the necessary material to the Executive Secretary prior to close of business on November 3, 2010. Electronic comments must adhere to disability accessibility guidelines (Section 508 compliance).

Dated: September 28, 2010.

Richard A. Henry,

Deputy Executive Secretary, Advisory Committee on Blood Safety and Availability.

[FR Doc. 2010–24735 Filed 10–1–10; 8:45 am]

BILLING CODE 4150–41–P

DEPARTMENT OF HEALTH AND HUMAN SERVICES

Substance Abuse and Mental Health Services Administration

Agency Information Collection Activities: Submission for OMB Review; Comment Request

Periodically, the Substance Abuse and Mental Health Services Administration (SAMHSA) will publish a summary of information collection requests under OMB review, in compliance with the Paperwork Reduction Act (44 U.S.C. Chapter 35). To request a copy of these documents, call the SAMHSA Reports Clearance Officer on (240) 276–1243.

Proposed Project: Evaluation of Pregnant and Postpartum Women (PPW) Program

The Substance Abuse and Mental Health Services Administration (SAMHSA), Center for Substance Abuse Treatment (CSAT), is funding 11 fiscal year (FY) 2009 Services Grants for the Residential Treatment for Pregnant and Postpartum Women (PPW) Program. The purpose of the PPW Program is to provide cost-effective, comprehensive, residential treatment services for pregnant and postpartum women who suffer from alcohol and other drug use problems, and for their infants and children impacted by the perinatal and environmental effects of maternal substance use and abuse.

Section 508 [290bb–1] of the Public Health Service Act mandates the evaluation and dissemination of findings of residential treatment programs for pregnant and postpartum women. This cross-site accountability assessment will assess project activities implemented for these services.

CSAT is requesting approval for a total of 8,404 burden hours for this new data collection. CSAT is requesting approval for a total of 23 instruments. Of these 23 instruments, 18 instruments are client-level tools and 5 instruments are process-level tools. To examine the effectiveness and impact of the PPW program, the current design includes both client-level outcomes and process evaluation components. The purpose of the outcome evaluation component is to examine the extent to which grantees accomplish the five core goals specified by the PPW program request for applications (RFA). These goals include:

- Decrease the use and/or abuse of prescription drugs, alcohol, tobacco, illicit and other harmful drugs (*e.g.,* inhalants) among pregnant and postpartum women;
- Increase safe and healthy pregnancies; improve birth outcomes; and reduce related effects of maternal drug abuse on infants and children;
- Improve the mental and physical health of the women and children;
- Improve family functioning, economic stability, and quality of life; and
- Decrease involvement in and exposure to crime, violence, sexual and physical abuse, and child abuse and neglect.

In order to help interpret client-level outcomes, the process evaluation will explore what grantees are actually doing, how well they are doing it, any challenges encountered, and strategies grantees used to address them.

Data collection instruments will be used to collect outcome and process data for this cross-site accountability evaluation, program and treatment planning, and local evaluations. For clients, data will be collected from women at four time points (intake, 6-months post-intake, discharge, and 6-months post-discharge), consistent with the GPRA data collection schedule. The schedule for collecting child data is similar to the mothers, with the addition of a 3-month post-intake time point. The following interview instruments will be used for women, fathers/mother's partner, and children:

Women Focused Tools

- BASIS–24® (psychological symptomology).
- Child Abuse Potential Inventory (overall risk for child physical abuse).
- Ferrans and Powers Quality of Life Index (quality of life measure).
- Family Support Scale (helpfulness of sources of support to parents raising a young child).
- Women's Discharge Tool (services received, length of stay, treatment goals achieved).
- Staff Completed Women's Items (pregnancy status, problems and outcomes).
- Items Administered to Women (children residing with mother in

treatment, tobacco use, physical abuse and sexual abuse in the past year).

Father and Partner Focused Tools

• Ferrans and Powers Quality of Life Index (quality of life measure).

Child Focused Tools

• Brief Infant Toddler Social and Emotional Assessment (children 12–35 months; social and emotional assessment).
• Child Data Collection Tool (all children; descriptive biopsychosocial measure).
• Children's Discharge Tool (all children; services received, length of stay, treatment goals achieved, whether child lived in the facility).
• CRAFFT (children 11–17; adolescent substance use screen).
• Newborn's Medical Record Audit (childen birth-3 months; birth outcomes).
• Parenting Relationship Questionnaire (children 2–17 years; parent's relationship with child).
• Parenting Stress Index (children 1 month—12 years; parenting stress).
• Social Skills Improvement System (children 3–17 years; social skills).
• Trauma Symptom Checklist for Young Children (3–12 years; trauma symptoms).
• Staff Completed Child Items (children 0–17; prematurity, child's recent primary residence, whether child will reside in treatment with mother).
• Staff Completed Newborn Items (children 0–3 months; prematurity, length of stay in hospital, neonatal intensive care unit (NICU), and treatment for neononatal abstinence syndrome).

Note that all child focused tools are records reviews or administered as maternal interviews with the exception of CRAFFT, which is administered to the children directly.

Process Evaluation Tools

• Biannual Project Director Telephone Interview (interview with grantee project directors to clarify information reported in their biannual progress reports);
• Site Visit Protocol—Client Focus Group (focus groups with clients to gather information about their experience in the program);
• Site Visit Protocol—Clinical Director(s)/Supervisor(s) (interviews with both the director of clinical services for women and the director of clinical services for children to gather more specific information about clinical services);
• Site Visit Protocol—Counselor(s) (interviews with counselors to gather information related to daily treatment operations and their experience in providing services); and
• Site Visit Protocol—Program Director (interview with grantee program directors to gather information about overall PPW programmatic issues).

All data will be collected using a combination of observation, records review, questionnaires, and personal interviews. CSAT will use this data for accountability reporting, and program monitoring to inform public policy, research, and programming as they relate to the provision of women's services. Data produced by this study will provide direction to the type of technical assistance that will be required by service providers of women's programming. In addition, the data will be used by individual grantees to support progress report efforts.

The total annualized burden to respondents for all components of the PPW program is estimated to be 8,404 hours. Table A–1 presents a detailed breakdown of the annual burden for all data collection instruments for all respondents (*i.e.*, mother, child, project staff, partner/father (family members), medical staff, project director, clinical director, counselor, program director). The number of respondents for all child-focused tools is weighted, based on the percentage of children within the appropriate age bracket in the prior PPW evaluation. With the exception of the CRAFFT, all child-focused tools are completed for the child by the mother or project staff. The burden estimates, also summarized in Table A–2, are based on the reported experience of the 2006 cohort, proprietary instrument developer estimates and experience, pre-testing of the additional items completed by staff and administered to women, and pre-testing of process evaluation measures. There are no direct costs to respondents other than their time to participate.

TABLE A–1—DETAILED ANNUAL BURDEN FOR ALL INTERVIEWS & SURVEYS

Interviews and surveys	Respondent	Number of respondents [1]	Responses per respondent	Total responses	Burden per resp. (hrs.)	Total burden (hrs.)
Child Focused Interviews:						
CRAFFT (11–17 yrs) [2]	Child	70	5	350	0.08	28
Brief Infant Toddler Social and Emotional Assessment (12–35 mos) [3].	Mother	141	5	705	0.17	120
Child Data Collection Tool (0–17 yrs) [4].	Mother	440	2	880	0.75	660
Parenting Relationship Questionnaire (2–17 yrs) [5].	Mother	387	5	1,935	0.25	484
Parenting Stress Index (1 month–12 yrs) [6].	Mother	418	10	4,180	0.5	2,090
Social Skills Improvement System (3–17 yrs) [7].	Mother	326	5	1,630	0.42	685
Trauma Symptom Checklist for Young Children (3–12 yrs) [8].	Mother	290	5	1,450	0.33	479
Women Focused Interviews:						
BASIS–24®	Mother	440	4	1,760	0.25	440
Child Abuse Potential Inventory	Mother	440	4	1,760	0.33	581
Family Support Scale	Mother	440	4	1,760	0.17	299
Ferrans and Powers Quality of Life Index (Women).	Mother	440	4	1,760	0.17	299
Items Administered to Women	Mother	440	4	1,760	0.17	299
Partners/Fathers Interview:						

TABLE A–1—DETAILED ANNUAL BURDEN FOR ALL INTERVIEWS & SURVEYS—Continued

Interviews and surveys	Respondent	Number of respondents [1]	Responses per respondent	Total responses	Burden per resp. (hrs.)	Total burden (hrs.)
Ferrans and Powers Quality of Life Index (Partners).	Partner/Father	110	2	220	0.17	37
Staff Completed Items/Record Reviews at 11 Facilities:						
Children's Discharge Tool (0–17 yrs) [9].	Project Staff	11	80	880	0.58	510
Women's Discharge Tool	Project Staff	11	40	440	0.58	255
Newborn's Medical Record Audit (0–3 mos) [10].	Medical Staff	11	25	275	0.08	22
Staff Completed Newborn Items	Medical Staff	11	25	275	0.25	69
Staff Completed Child Items (0–17 yrs) [11].	Project Staff	11	400	4,400	0.08	352
Staff Completed Women's Items [12].	Project Staff	11	160	1,760	0.17	299
Process Evaluation:						
Biannual Project Director Telephone Interview.	Project Director	11	2	22	1	22
Site Visit Protocol—Client Focus Group [13].	Mother	176	1	176	1.5	264
Site Visit Protocol—Clinical Director/Supervisor.	Clinical Director/Supervisor.	22	1	22	2	44
Site Visit Protocol—Counselor(s)	Counselor	33	1	33	1	33
Site Visit Protocol—Program Director.	Program Director	11	1	11	3	33
Total		4,701		28,444		8,404

[1] Data will be collected from women at four time points (intake, 6-months post-intake, discharge, and 6-months post-discharge), consistent with the GPRA data collection schedule. Figures in this table are based on 40 mothers per site with 2 children and 0.25 father/partner per mother. The schedule for collecting child data is similar to the mother's with the addition of a 3-months post-intake time point with selected tools for a total of five time points. All child focused tools are completed by the mother or project staff, with the exception of CRAFFT. For fathers and partners, data will be collected at two points (intake and discharge).
[2] Based on 8% of 880 minor children ages 11 to 17 at intake, 3 months, 6 months, discharge, and 6-months post-discharge.
[3] Based on 16% of 880 minor children ages 12–35 months at intake, 3 months, 6 months, discharge, and 6-months post-discharge.
[4] Based on 440 mothers having 2 minor children at intake and/or delivery.
[5] Based on 44% of 880 minor children ages 2 to 17 at intake, 3 months, 6 months, discharge, and 6-months post-discharge.
[6] Based on 95% of 880 minor children ages 1 month to 12 years (n = 836). For simplicity, this calculation assumes that 95% of mothers have two children in this age group and complete the tool for each child at intake, 3 months, 6 months, discharge, and 6-months post-discharge.
[7] Based on 37% of 880 minor children ages 3 to 17 at intake, 3 months, 6 months, discharge, and 6-months post-discharge.
[8] Based on 33% of 880 minor children ages 3 to 12 at intake, 3 months, 6 months, discharge, and 6-months post-discharge.
[9] Based on 1 staff member at each of the 11 programs completing the tool for 80 children at discharge.
[10] Based on 31% of 880 minor children ages 0–3 months at intake or delivery.
[11] Based on 80 minor children per site ages 0 to 17 at intake, 3 months, 6 months, discharge, and 6-months post-discharge.
[12] Based on 1 staff member at each of the 11 programs completing items for 40 women at intake, 6 months, discharge, and 6-months post-discharge.
[13] Based on 2 focus groups with 8 mothers at each site.

TABLE A–2—SUMMARY TOTAL ANNUAL RESPONDENT BURDEN

Respondent	Number of respondents	Responses per respondent	Total responses	Hours per response	Total hour burden
Mothers	440		19,756		6,700
Partners/Fathers	110		220		37
Children (11–17 yrs)	70		350		28
Medical Staff	11		550		91
Project Staff	11		7,480		1,416
Project Director	11		22		22
Clinical Director/Supervisor	22		22		44
Counselor	33		33		33
Program Director	11		11		33
Total	719		28,444		8,404

Note: Total number of respondents represents the number of each type of respondent that will be completing at least *one* tool across eleven sites over one year of data collection. The number of respondents (719) reported on this table differs from Table A–1 total number of respondents (4,701) which reflects completion of *all* tools across eleven sites over one year of data collection.

Written comments and recommendations concerning the proposed information collection should be sent by November 3, 2010 to: SAMHSA Desk Officer, Human

Resources and Housing Branch, Office of Management and Budget, New Executive Office Building, Room 10235, Washington, DC 20503; due to potential delays in OMB's receipt and processing of mail sent through the U.S. Postal Service, respondents are encouraged to submit comments by fax to: 202–395–7285.

Dated: September 28, 2010.

Elaine Parry,

Director, Office of Management, Technology and Operations.

[FR Doc. 2010–24847 Filed 10–1–10; 8:45 am]

BILLING CODE 4162–20–P

DEPARTMENT OF HEALTH AND HUMAN SERVICES

Substance Abuse and Mental Health Services Administration

Agency Information Collection Activities: Submission for OMB Review; Comment Request

Periodically, the Substance Abuse and Mental Health Services Administration (SAMHSA) will publish a summary of information collection requests under OMB review, in compliance with the Paperwork Reduction Act (44 U.S.C. Chapter 35). To request a copy of these documents, call the SAMHSA Reports Clearance Officer on (240) 276–1243.

Project: Assessment of the Underage Drinking Prevention Education Initiatives State Videos Project—New

The Substance Abuse and Mental Health Services Administration's Center for Substance Abuse Prevention (CSAP) is requesting Office of Management and Budget (OMB) approval of three new data collection instruments—

- State Video Contacts Form.
- Video Viewers Form.
- Dissemination Update Online Form.

This new information collection is for the assessment of the 2010–2013 Underage Drinking Prevention Education Initiatives State Videos project. In 2007, four States participated in a pilot study to produce videos on the topic of underage drinking prevention. Based upon the success of those videos, 10 additional States and 1 Territory were provided funds to produce videos in 2009. Contingent on available funds, CSAP hopes to invite approximately 10 States/Territories per year to produce their own videos.

Over the next 4 years, CSAP will conduct a process and outcome assessment of this project. The process assessment will focus on the experiences associated with planning and producing the State videos. The outcome assessment will examine the effectiveness of the State Videos project in meeting the core project objectives and will capture the State's dissemination efforts. The process and outcome assessments will encompass State videos that will be produced in 2010–2013 and those that were produced in 2007 and 2009. State contacts will be asked to update their dissemination information online if there have been changes in these figures during the previous 6 months, up through 2013. Additionally, data will be collected from viewers of the State videos using an online survey.

The information will be collected from the primary contact employee designated by the States that have agreed to participate in the production of a video for the State Videos project. The viewers' information will be collected from those who voluntarily decide to complete a short survey after seeing the video.

SAMHSA/CSAP intends to support annual videos on State underage drinking prevention videos. The information collected will be used by CSAP to help plan for these annual video productions and provide technical assistance to the participating States. The collected information will also provide a descriptive picture of the initiative, indicate how the videos have been received, and highlight some factors that may be associated with successful dissemination outcomes.

The information needs to be obtained using a combination of initial telephone interviews to collect process data, followed by online forms to collect outcome and dissemination data. A survey of viewers, collected online, will also be used to assess the effectiveness of the State videos in increasing awareness of the underage drinking prevention activities in these States. This information collection is being implemented under authority of Section 501(d)(4) of the Public Health Service Act (42 U.S.C. 290aa).

State staff members will be contacted once the video has been finalized. These State staff members will be asked to complete a short telephone interview that asks questions about the process of producing the State video. The State Video Contacts Form includes nine items about the State video, including:

- State's objectives for the video on underage drinking prevention.
- Targeted audiences.
- Satisfaction with technical assistance (TA) received.
- Usefulness of preplanning materials.
- Helpfulness of TA during different phases of production.
- Recommendations for improving the process.
- Recommendations for improving the content of the video.
- Advice to other States interested in producing a video.

If the State has disseminated the video at the time of the initial telephone interview, then they will also be asked to complete the second part of the State Video Contacts Form, which collects information on dissemination outcomes. The State Video Contacts Form includes 19 items about the dissemination activities of the State's video, including:

- Time when they disseminated the video.
- Methods of dissemination.
- Number of people who viewed the video.
- Number of DVDs and videotapes requested.
- Effectiveness of the dissemination methods.
- Factors that contributed to the effectiveness of dissemination.
- Effect of TA received.
- Effect of the video in raising awareness about underage drinking prevention successes in the State.
- Effect of the video in raising awareness about underage drinking prevention challenges in the State.
- Effectiveness of the video in presenting State's/Territory's prevention activities.
- Feedback received.
- Unintended positive outcomes.
- Effect of TA in improving the capacity to provide effective prevention services.

After the State points of contact have completed the State Video Contacts Form online, they will be requested to update dissemination activities online if there have been any changes during the past 6 months. This form includes seven items, including:

- If there have been changes in dissemination during the past 6 months.
- Most recent dissemination numbers by method.
- Facilitation factors.
- Additional feedback.
- Additional unintended positive outcomes.

Data will also be collected from viewers of the State videos. Each State video will include instructions to viewers on how to access the Video Viewers Form. The instructions may be a unique URL, or they may consist of instructions on each State's Web site on underage drinking prevention. This information will allow the CSAP to provide feedback to the States on their video and to measure the effectiveness of their video. The Video Viewers Form includes 24 items about the video, including:

- When and where they viewed the video.
- Whom they recommended to view the video.
- What they learned from watching the video.
- What actions they may take because of the video.
- Whether they plan to change behaviors and knowledge about their State's activities.

The process assessment of the State videos will be conducted using telephone interviews with the State points of contact. This interview should take 10 minutes (0.167 hours). The outcome assessment of the State videos will be collected using an online form that will be completed by no more than 26 respondents and will require only 1 response per respondent. It will take an average of 10 minutes (0.167 hours) to review the instructions, complete the form, and submit it electronically.

Dissemination updates will be requested from each State point of contact every 6 months if there have been changes during that time period. These updates will be submitted electronically, and it should take approximately 5 minutes (0.083 hours) to review the instructions, complete the short form, and submit it electronically. The burden estimate is based on comments from several potential respondents who completed the online form, submitted it, and provided feedback on how long it would take them to complete it. The respondents will be employees of the State.

A short survey will also be used to collect data from viewers of the State videos. An estimated 1,000 viewers will voluntarily choose to complete this online survey, which will take 10 minutes (0.167 hours) to review, complete, and submit. The viewers are expected to represent the general public.

Form name	Number of respondents	Responses per respondent	Burden per response (hrs.)	Total burden
Process Interview	26	1	0.167	4.34
Dissemination Outcome	26	1	0.167	4.34
Dissemination Updates	26	1	0.083	2.16
Viewers Survey	1,000	1	0.167	167
Total	1,078			177.84

Written comments and recommendations concerning the proposed information collection should be sent by November 3, 2010 to: SAMHSA Desk Officer, Human Resources and Housing Branch, Office of Management and Budget, New Executive Office Building, Room 10235, Washington, DC 20503; due to potential delays in OMB's receipt and processing of mail sent through the U.S. Postal Service, respondents are encouraged to submit comments by fax to: 202–395–5806.

Dated: September 28, 2010.

Elaine Parry

Director, Office of Management Technology and Operations.

[FR Doc. 2010–24849 Filed 10–1–10; 8:45 am]

BILLING CODE 4162–20–P

DEPARTMENT OF HEALTH AND HUMAN SERVICES

Food and Drug Administration

[Docket No. FDA–2004–N–0451] (formerly Docket No. 2004N–0226)

Food and Drug Administration Modernization Act of 1997: Modifications to the List of Recognized Standards, Recognition List Number: 025

AGENCY: Food and Drug Administration, HHS.

ACTION: Notice.

SUMMARY: The Food and Drug Administration (FDA) is announcing a publication containing modifications the Agency is making to the list of standards FDA recognizes for use in premarket reviews (FDA recognized consensus standards). This publication, entitled "Modifications to the List of Recognized Standards, Recognition List Number: 025" (Recognition List Number: 025), will assist manufacturers who elect to declare conformity with consensus standards to meet certain requirements for medical devices.

DATES: Submit either electronic or written comments concerning this document at any time. See section VII of this document for the effective date of the recognition of standards announced in this document.

ADDRESSES: Submit written requests for single copies of "Modifications to the List of Recognized Standards, Recognition List Number: 025" to the Division of Small Manufacturers, International, and Consumer Assistance, Center for Devices and Radiological Health, Food and Drug Administration, 10903 New Hampshire Ave., Bldg. 66, Silver Spring, MD 20993–0002. Send two self-addressed adhesive labels to assist that office in processing your requests, or fax your request to 301–847–8149. Submit written comments concerning this document, or recommendations for additional standards for recognition, to the contact person (see **FOR FURTHER INFORMATION CONTACT**). Submit electronic comments by email: *standards@cdrh.fda.gov*. This document may also be accessed on FDA's Internet site at *http://www.fda.gov/MedicalDevices/DeviceRegulationandGuidance/Standards/ucm123792.htm*. See section VI of this document for electronic access to the searchable database for the current list of FDA recognized consensus standards, including Recognition List Number: 025 modifications and other standards related information.

FOR FURTHER INFORMATION CONTACT: Carol L. Herman, Center for Devices and Radiological Health, Food and Drug Administration, 10903 New Hampshire Ave., Bldg. 66, rm. 3632, Silver Spring, MD 20993–0002, 301–796–6574.

SUPPLEMENTARY INFORMATION:

I. Background

Section 204 of the Food and Drug Administration Modernization Act of 1997 (FDAMA) (Public Law 105–115) amended section 514 of the Federal Food, Drug, and Cosmetic Act (the act) (21 U.S.C. 360d). Amended section 514 allows FDA to recognize consensus standards developed by international and national organizations for use in satisfying portions of device premarket review submissions or other requirements.

In a notice published in the **Federal Register** of February 25, 1998 (63 FR 9561), FDA announced the availability of a guidance entitled "Recognition and Use of Consensus Standards." The notice described how FDA would implement its standard recognition

program and provided the initial list of recognized standards. Modifications to the initial list of recognized standards, as published in the **Federal Register**, are identified in table 1 of this document.

TABLE 1.—PREVIOUS PUBLICATIONS OF STANDARD RECOGNITION LISTS

February 25, 1998 (63 FR 9561)	November 8, 2005 (70 FR 67713)
October 16, 1998 (63 FR 55617)	March 31, 2006 (71 FR 16313)
July 12, 1999 (64 FR 37546)	June 23, 2006 (71 FR 36121)
November 15, 2000 (65 FR 69022)	November 3, 2006 (71 FR 64718)
May 7, 2001 (66 FR 23032)	May 21, 2007 (72 FR 28500)
January 14, 2002 (67 FR 1774)	September 12, 2007 (72 FR 52142)
October 2, 2002 (67 FR 61893)	December 19, 2007 (72 FR 71924)
April 28, 2003 (68 FR 22391)	September 9, 2008 (73 FR 52358)
March 8, 2004 (69 FR 10712)	March, 18, 2009 (74 FR 11586)
June 18, 2004 (69 FR 34176)	September 8, 2009 (74 FR 46203)
October 4, 2004 (69 FR 59240)	May 5, 2010 (75 FR 24711)
May 27, 2005 (70 FR 30756)	June 10, 2010 (75 FR 32943)

These notices describe the addition, withdrawal, and revision of certain standards recognized by FDA. The Agency maintains "hypertext markup language (HTML)" and "portable document format (PDF)" versions of the list of "FDA Recognized Consensus Standards." Both versions are publicly accessible at the Agency's Internet site. See section VI of this document for electronic access information. Interested persons should review the supplementary information sheet for the standard to understand fully the extent to which FDA recognizes the standard.

II. Modifications to the List of Recognized Standards, Recognition List Number: 025

FDA is announcing the addition, withdrawal, correction, and revision of certain consensus standards the Agency will recognize for use in satisfying premarket reviews and other requirements for devices. FDA will incorporate these modifications in the list of FDA Recognized Consensus Standards in the Agency's searchable database. FDA will use the term "Recognition List Number: 025" to identify these current modifications.

In table 2 of this document, FDA describes the following modifications: (1) The withdrawal of standards and their replacement by others; (2) the correction of errors made by FDA in listing previously recognized standards; and (3) the changes to the supplementary information sheets of recognized standards that describe revisions to the applicability of the standards.

In section III of this document, FDA lists modifications the Agency is making that involve the initial addition of standards not previously recognized by FDA.

TABLE 2.—MODIFICATIONS TO THE LIST OF RECOGNIZED STANDARDS

Old Recognition No.	Replacement Recognition No.	Title of Standard[1]	Change
A. Anesthesia			
1–61	1–82	IEC 60601–2–13 Edition 3.1 2009–08 Medical electrical equipment—Part 2–13: Particular requirements for the safety and essential performance of anaesthetic systems	Withdrawn and replaced with newer version
B. Biocompatibility			
2–96		ASTM F 1903–98 (Reapproved 2003) Standard Practice for Testing For Biological Responses to Particles in vitro	Type of standard and Contact person
2–98	2–156	ANSI/AAMI/ISO 10993–1:2009 Biological evaluation of medical devices—Part 1: Evaluation and testing within a risk management process	Withdrawn and replaced with newer version
2–100		ASTM E1372–95 (2003) Standard Test Method for Conducting a 90-Day Oral Toxicity Study in Rats	Withdrawn
2–115		ASTM F 895—84 (Reapproved 2006) Standard Test Method for Agar Diffusion Cell Culture Screening for Cytotoxicity	Title, Type of standard , Relevant guidance and Contact person
2–117		ANSI/AAMI/ISO 10993–3:2003/(R)2009 Biological evaluation of medical devices - Part 3: Tests for genotoxicity, carcinogenicity, and reproductive toxicity	Reaffirmation, CDRH Office(s) and Division(s) associated with recognized standard and Contact person
2–118		ANSI/AAMI/ISO 10993–11:2006 Biological evaluation of medical devices—Part 11: Tests for systemic toxicity	Contact person
2–119		ASTM F 813–07 Standard Practice for Direct Contact Cell Culture Evaluation of Materials for Medical Devices	Title, Type of standard and Contact person
2–135		ANSI/AAMI/ISO 10993–12:2007 Biological evaluation of medical devices—Part 12: Sample preparation and reference materials	Title and Contact person

TABLE 2.—MODIFICATIONS TO THE LIST OF RECOGNIZED STANDARDS—Continued

Old Recognition No.	Replacement Recognition No.	Title of Standard[1]	Change
2–147	2–157	USP 33—NF 28 2010 Biological Tests <87> Biological Reactivity Test, In Vitro—Direct Contact Test	Withdrawn and replaced with newer version
2–148	2–158	USP 33–NF28 2010 Biological Tests <87> Biological Reactivity Test, In Vitro—Elution Test	Withdrawn and replaced with newer version
2–149	2–159	USP 33–NF28 2010 Biological Tests <88> Biological Reactivity Tests, In Vivo, Procedure—Preparation of Sample	Withdrawn and replaced with newer version
2–150	2–160	USP 33–NF28 2010 Biological Tests <88> Biological Reactivity Tests, In Vivo, Classification of Plastics—Intracutaneous Test	Withdrawn and replaced with newer version
2–151	2–161	USP 33–NF28 2010 Biological Tests <88> Biological Reactivity Tests, In Vivo, Classification of Plastics—Systemic Injection Test	Withdrawn and replaced with newer version
C. Cardiology			
3–74	3–79	ASTM F 2079—09 Standard Test Method for Measuring Intrinsic Elastic Recoil of Balloon-Expandable Stents	Withdrawn and replaced with newer version
3–75		ANSI/AAMI SP10:2002/(R)2008 & ANSI/AAMI SP10:2002/A1:2003/(R)2008 & ANSI/AAMI SP10:2002/A2:2006/(R)2008 Manual, electronic or automated sphygmomanometers	Title and Extent of recognition
D. Dental/ENT			
4–86		ANSI/ADA Specification No. 38 2000 (Reaffirmed 2010) Metal-Ceramic Dental Restorative Systems	Reaffirmation
4–91		ANSI/ADA Specification No. 80 2001 (Reaffirmed 2007) Dental Materials—Determination of Color Stability Test Procedure	Reaffirmation
4–107	4–188	ISO 9917–2 Second edition 2010–04–15 Dentistry—Water-based cements—Part 2: Resin-modified cements	Withdrawn and replaced with newer version
4–117		ANSI/ADA Specification No. 12 2002 (Reaffirmed 2007) Denture Base Polymers	Reaffirmation
4–119		ANSI/ADA Specification No. 82 1998 (Reaffirmed 2009)—Dental Reversible/Irreversible Hydrocolloid Impression Material Systems	Reaffirmation
4–139		ANSI/ADA Specification No. 48-Visible Light Curing Units: 2004, Reaffirmed 2009	Reaffirmation
4–160		ANSI/ASA S3.1–1999 (Reaffirmed 2003) (Reaffirmed 2008) Maximum Permissible Ambient Noise Levels for Audiometric Test Rooms	Reaffirmation
4–164		ANSI/ASA S3.7–1997 (Reaffirmed 2003) (Reaffirmed 2008) Methods for Coupler Calibration of Earphones	Reaffirmation
4–166		ANSI/ASA S3.20–1995 (Reaffirmed 2003) (Reaffirmed 2008) Bioacoustical Terminology	Reaffirmation
4–167		ANSI/ASA S3.21–2004 (Reaffirmed 2009) Methods for Manual Pure-Tone Threshold Audiometry	Reaffirmation
4–169	4–190	ANSI/ASA S3.35–2010 (Revision of ANSI S3.35–2004) Method of Measurement of Performance Characteristics of Hearing Aids Under Simulated Real-Ear Working Conditions	Withdrawn and replaced with newer version
E. General			
5–31		ISO 15223:2000 Medical device symbols to be used with medical device labels, labeling and information to be supplied—First Edition: Amendment 1: 08/01/2002; Amendment 2: 02/15/2004	Withdrawn
5–32		CEN EN 980:1996+A1:1999+A2:2001 Graphical Symbols for Use in the Labelling of Medical Devices	Withdrawn

TABLE 2.—MODIFICATIONS TO THE LIST OF RECOGNIZED STANDARDS—Continued

Old Recognition No.	Replacement Recognition No.	Title of Standard[1]	Change
5–38	5–62	ANSI/ASQ Z1.4–2008 Sampling Procedures and Tables for Inspection by Attributes	Withdrawn and replaced with newer version
F. General Hospital/General Plastic Surgery			
6–62	6–239	ISO 8536–6 Second edition 2009–11–15 Infusion equipment for medical use—Part 6: Freeze drying closures for infusion bottles	Withdrawn and replaced with newer version
6–64	6–240	ISO 8536–3 Third edition 2009–06–01 Infusion equipment for medical use— Part 3: Aluminum caps for infusion bottles	Withdrawn and replaced with newer version
6–70		ASTM E825–98 (Reapproved 2009) Standard Specification for Phase Change-Type Disposable Fever Thermometer for Intermittent Determination of Human Temperature	Reaffirmation
6–110		ASTM F 1441–03 (Reapproved 2009) Standard Specification for Soft-Tissue Expander Devices	Reaffirmation
6–112		ANSI/AAMI PB70:2003/(R)2009 Liquid barrier performance and classification of protective apparel and drapes intended for use in health care facilities	Reaffirmation
6–123		ASTM E667–98 (Reapproved 2009) Standard Specification for Mercury-in-Glass, Maximum Self-Registering Clinical Thermometers	Reaffirmation
6–124		ASTM E1104–98 (Reapproved 2009) Standard Specification for Clinical Thermometer Probe Covers and Sheaths	Reaffirmation
6–125		ASTM E1965–98 (Reapproved 2009) Standard Specification for Infrared Thermometers for Intermittent Determination of Patient Temperature	Reaffirmation
6–127	6–241	ISO 1135–4 Forth edition 2010–04–15 Transfusion equipment for medical use—Part 4: Transfusion sets for single use	Withdrawn and replaced with newer version
6–173	6–242	ISO 8536–2 Third edition 2010–03–15 Infusion equipment for medical use—Part 2: Closures for infusion bottles	Withdrawn and replaced with newer version
G. IVD			
7–49	7–210	CLSI H26–A2 Validation, Verification, and Quality Assurance of Automated Hematology Analyzers; Approved Standard-Second Edition	Withdrawn and replaced with newer version
7–82	7–211	CLSI C34–A3 Sweat Testing: Sample Collection and Quantitative Chloride Analysis; Approved Guideline-Third Edition	Withdrawn and replaced with newer version
7–96	7–212	CLSI EP18–A2 Risk Management Techniques to Identify and Control Laboratory Error Sources; Approved Guideline-Second Edition	Withdrawn and replaced with newer version
7–100		ISO 15197 First edition 2003–05–01 In vitro diagnostic test systems—Requirements for blood-glucose monitoring systems for self testing in managing diabetes mellitus	Title
7–141	7–213	CLSI H18–A4 Procedures for the Handling and Processing of Blood Specimens for Common Laboratory Tests; Approved Guideline-Fourth Edition	Withdrawn and replaced with newer version
7–181	7–214	CLSI M35–A2 Abbreviated Identification of Bacteria and Yeast; Approved Guideline-Second Edition	Withdrawn, see 7–197
7–186	7–215	CLSI M44–A2 Method for Antifungal Disk Diffusion Susceptibility Testing of Yeasts; Approved Guideline-Second Edition	Withdrawn and Replaced with newer version
7–199	7–216	CLSI M100–S20 Performance Standards for Antimicrobial Susceptibility Testing; Twentieth Informational Supplement	Withdrawn and Replaced with newer version
7–208	7–217	CLSI M44–S3, Zone Diameter Interpretive Standards, Corresponding Minimal Inhibitory Concentration (MIC) Interpretive Breakpoints, and Quality Control Limits for Antifungal Disk Diffusion Susceptibility Testing of Yeasts; Third Informational Supplement	Withdrawn and replaced with newer version
H. Materials			

TABLE 2.—MODIFICATIONS TO THE LIST OF RECOGNIZED STANDARDS—Continued

Old Recognition No.	Replacement Recognition No.	Title of Standard[1]	Change
8–66	8–191	ISO 6474–1 First edition Implants for surgery—Ceramic materials—Part 1: Ceramic materials based on high purity alumina	Withdrawn and replaced with newer version
8–71	8–192	ASTM F2182—09 Standard Test Method for Measurement of Radio Frequency Induced Heating On or Near Passive Implants During Magnetic Resonance Imaging	Withdraw and replaced with newer version
8–85	8–193	ASTM F 1854—09 Standard Test Method for Stereological Evaluation of Porous Coatings on Medical Implants	Withdraw and replaced with newer version
8–88		ASTM F2024–00 Standard Practice for X-ray Diffraction Determination of Phase Content of Plasma-Sprayed Hydroxyapatite Coatings	Type of standard and Contact person
8–130		ASTM F 620—06 Standard Specification for Alpha Plus Beta Titanium Alloy Forgings for Surgical Implants	Type of standard
8–131		ASTM F 799—06 Standard Specification for Cobalt-28Chromium-6Molybdenum Alloy Forgings for Surgical Implants (UNS R31537, R31538, R31539)	Type of standard
8–137		ASTM F 75—07, Standard Specification for Cobalt-28 Chromium-6 Molybdenum Alloy Castings and Casting Alloy for Surgical Implants (UNS R30075)	Type of standard
8–138		ASTM F 745—07 Standard Specification for 18Chromium-12.5Nickel-2.5Molybdenum Stainless Steel for Cast and Solution-Annealed Surgical Implant Applications	Type of standard
8–156		ASTM F 139—08 Standard Specification for Wrought 18Chromium-14Nickel-2.5Molybdenum Stainless Steel Sheet and Strip for Surgical Implants (UNS S31673)	Type of standard
8–183		ASTM F 560—08 Standard Specification for Unalloyed Tantalum for Surgical Implant Applications (UNS R05200, UNS R05400)	Type of standard
I. Neurology			
17–2		ASTM F1542–94 (2000) Standard Specification for the Requirements and Disclosure of Self-Closing Aneurysm Clips	Withdrawn
17–6	17–9	ASTM F 2129–08 Standard Test Method for Conducting Cyclic Potentiodynamic Polarization Measurements to Determine the Corrosion Susceptibility of Small Implant Devices	Withdrawn and replaced with newer version
J. OB-GYN/Gastroenterology			
9–23		ASTM F1518–00 Standard Practice for Cleaning and Disinfection of Flexible Fiberoptic and Video Endoscopes Used in the Examination of the Hollow Viscera	Withdrawn
K. Ophthalmic			
10–12	10–59	ISO 11980 Second edition 2009–10–15 Ophthalmic optics—Contact lenses and contact lens care products—Guidance for clinical investigations	Withdrawn and replaced with newer version
10–30		ANSI Z80.7 (2002) Ophthalmics—Intraocular Lenses	Withdrawn
10–34		ANSI Z80.20 (2004) Ophthalmics—Contact lenses- Standard Terminology, Tolerances, Measurements and Physicochemical Properties	Withdrawn
10–44	10–60	ISO 11981 Second edition 2009–07–01 Ophthalmic optics—Contact lenses and contact lens care products- Determination of physical compatibility of contact lens care products with contact lenses	Withdrawn and replaced with newer version
L. Orthopedics			
11–171		ASTM F 1814—97a (Reapproved 2009) Standard Guide for Evaluating Modular Hip and Knee Joint Components	Reaffirmation

TABLE 2.—MODIFICATIONS TO THE LIST OF RECOGNIZED STANDARDS—Continued

Old Recognition No.	Replacement Recognition No.	Title of Standard[1]	Change
11–179	11–220	ASTM F 2068—09 Standard Specification for Femoral Prostheses—Metallic Implants	Withdrawn and replaced with newer version
11–180		ASTM F 366—04 (Reapproved 2009) Standard Specification for Fixation Pins and Wires	Reaffirmation
11–181	11–221	ASTM F 1717—09 Standard Test Methods for Spinal Implant Constructs in a Vertebrectomy Model	Withdrawn and replaced with newer version
11–188	11–222	ISO 14243–1 Second edition 2009–11–15 Implants for surgery—Wear of total knee-joint prostheses—Part 1: Loading and displacement parameters for wear-testing machines with load control and corresponding environmental conditions for test	Withdrawn and replaced with newer version
11–189	11–223	ISO 14243–2 Second edition 2009–11–15 Implants for surgery—Wear of total knee-joint prostheses—Part 2: Methods of measurement	Withdrawn and replaced with newer version
11–197		ASTM F 983—86 (Reapproved 2009) Standard Practice for Permanent Marking of Orthopaedic Implant Components	Reaffirmation
11–199		ASTM F 565—04 (Reapproved 2009) ε Standard Practice for Care and Handling of Orthopedic Implants and Instruments	Reaffirmation
11–203		ASTM F 1541—02 (Reapproved 2007) ε Standard Specification and Test Methods for External Skeletal Fixation Devices	Title, Type of standard and Relevant guidance
11–210		ASTM F 543—07ε Standard Specification and Test Methods for Metallic Medical Bone Screws	Title, Type of standard and Relevant guidance
11–214		ASTM F 382—99 (Reapproved 2008) ε Standard Specification and Test Method for Metallic Bone Plates	Title and Type of standard
M. Sterility			
14–54	14–287	ANSI/AAMI/ISO 11737–2:2009 Sterilization of medical devices—Microbiological methods—Part 2: Tests of sterility performed in the definition, validation and maintenance of a sterilization process	Withdrawn and replaced with newer version
14–55		AAMI/ANSI/ISO 14160:1998/(R)2008 Sterilization of single-use medical devices incorporating materials of animal origin—Validation and routine control of sterilization by liquid chemical	Contact person
14–63	14–288	ASTM F1886/F1886M–09 Standard Test Method for Determining Integrity of Seals for Flexible Packaging by Visual Inspection	Withdrawn and replaced with newer version
14–77	14–290	ANSI/AAMI ST:24:1999/(R)2009 Automatic, general purpose ethylene oxide sterilizers and ethylene oxide sterilant sources intended for use in health care facilities	Withdrawn and replaced with newer version
14–88	14–291	ANSI/AAMI/ISO 14937:2009 Sterilization of health care products—General requirements for characterization of a sterilizing agent and the development, validation and routine control of a sterilization process for medical devices	Withdrawn and replaced with newer version
14–116	14–292	ANSI/AAMI ST72:2002/(R)2010 Bacterial Endotoxins—Test methodologies, routine monitoring, and alternatives to batch testing	Withdrawn and replaced with newer version
14–118	14–293	ANSI/AAMI ST50:2004/(R)2010 Dry heat (heated air) sterilizers	Withdrawn and replaced with newer version
14–152	14–294	ANSI/AAMI ST40:2004/(R)2010 Table-top dry heat (heated air) sterilization and sterility assurance in health care facilities	Withdrawn and replaced with newer version
14–164	14–295	ANSI/AAMI ST81:2004/(R)2010 Sterilization of medical devices—Information to be provided by the manufacturer for the processing of resterilizable medical devices	Withdrawn and replaced with newer version
14–181		AAMI/ANSI ST58: 2005 Chemical sterilization and high-level disinfection in health care facilities	Contact person

TABLE 2.—MODIFICATIONS TO THE LIST OF RECOGNIZED STANDARDS—Continued

Old Recognition No.	Replacement Recognition No.	Title of Standard[1]	Change
14–197		ASTM F1608–00 (Reapproved 2009) Standard Test Method for Microbial Ranking of Porous Packaging Materials (Exposure Chamber Method)	Reaffirmation
14–211		AOAC 6.2.01:2006 Official Method 955.14 Testing Disinfectants against Salmonella choleraesuis, Use-Dilution Method	Contact person
14–212		AOAC 6.2.02:2006 Official Method 991.47 Testing Disinfectants against Salmonella choleraesuis, Hard Surface Carrier Test Method	Contact person
14–213		AOAC 6.2.03:2006 Official Method 991.48 Testing Disinfectant against Staphylococcus aureus, Hard Surface Carrier Test Method	Contact person
14–214		AOAC 6.2.04:2006 Official Method 955.15 Testing Disinfectants Against Staphylococcus aureus, Use-Dilution Method	Contact person
14–215		AOAC 6.2.05:2006 Official Method 991.49 Testing Disinfectants against Pseudomonas aeruginosa, Hard Surface Carrier Test Method	Contact person
14–216		AOAC 6.2.06:2006 Official Method 964.02 Testing Disinfectants against Pseudomonas aeruginosa, Use-Dilution Method	Contact person
14–217		AOAC 6.3.02:2006 Official Method 955.17 Fungicidal Activity of Disinfectants Using Trichophyton mentagrophytes	Contact person
14–218		AOAC 6.3.05:2006 Official Method 966.04 Sporicidal Activity of Disinfectants Method I	Contact person
14–219		AOAC 6.3.06:2006 Official Method 965.12 Tuberculocidal Activity of Disinfectants	Contact person
14–223	14–296	ANSI/AAMI/ISO 11138–1:2006/(R)2010 Sterilization of health care products—Biological indicators—Part 1: General requirements	Withdrawn and replaced with newer version
14–224	14–297	ANSI/AAMI/ISO 11137–1:2006/(R)2010 Sterilization of health care products—Radiation—Part 1: Requirements for development, validation, and routine control of a sterilization process for medical devices	Withdrawn and replaced with newer version
14–226	14–298	ANSI/AAMI/ISO 11137–3:2006/(R)2010 Sterilization of health care products—Radiation—Part 3: Guidance on dosimetric aspects	Withdrawn and replaced with newer version
14–234	14–299	ASTM F2097–10 Standard Guide for Design and Evaluation of Primary Flexible Packaging for Medical Products	Withdrawn and replaced with newer version
14–265		USP 32:2009 <61> Microbiological Examination of Nonsterile Products: Microbial Enumeration Tests	Contact person
14–266		USP 32:2009 <71> Sterility Tests	Contact person
14–267		USP 32:2009 <85> Bacterial Endotoxins Test	Contact person
14–268		USP 32:2009 <151> Pyrogen Test	Contact person
14–269		USP 32:2009 <161> Transfusion and Infusion Assemblies and Similar Medical Devices	Contact person
14–270		USP 32:2009 Biological Indicator for Steam Sterilization—Self Contained	Contact person
14–271		USP 32: 2009 Biological Indicator for Dry-Heat Sterilization, Paper Carrier	Contact person
14–272		USP 32:2009 Biological Indicator for Ethylene Oxide Sterilization, Paper Carrier	Contact person
14–273		USP 32:2009 Biological Indicator for Steam Sterilization, Paper Carrier	Contact person
14–278		USP 32:2009 <62> Microbiological Examination of Nonsterile Products: Tests for Specified Microorganisms	Contact person
14–280		AAMI/ANSI ST79:2006 and A1:2008, A2:2009 (Consolidated Text) Comprehensive guide to steam sterilization and sterility assurance in health care facilities	Contact person

TABLE 2.—MODIFICATIONS TO THE LIST OF RECOGNIZED STANDARDS—Continued

Old Recognition No.	Replacement Recognition No.	Title of Standard[1]	Change
14–284	14–300	ASTM D4169–09 Standard Practice for Performance Testing of Shipping Containers and Systems	Withdrawn and replaced with newer version
14–285		AAMI/ANSI/ISO 14161:2009 Sterilization of health care products—Biological indicators—Guidance for the selection, use and interpretation of results	Contact person
N. Tissue Engineering			
15–16	15–19	ASTM F2450–10 Standard Guide for Assessing Microstructure of Polymeric Scaffolds for Use in Tissue-Engineered Medical Products	Withdrawn and replaced with newer version

[1] All standard titles in this table conform to the style requirements of the respective organizations.

III. Listing of New Entries

In table 3 of this document, FDA provides the listing of new entries and consensus standards added as modifications to the list of recognized standards under Recognition List Number: 025.

TABLE 3.—NEW ENTRIES TO THE LIST OF RECOGNIZED STANDARDS

Recognition No.	Title of Standard[1]	Reference No. & Date
A. Anesthesia		
1–83	Medical electrical equipment—Particular requirements for the basic safety and essential performance of respiratory gas monitors	ISO 21647:2004 TECHNICAL CORRIGENDUM 1
B. Cardiology		
3–80	Non-invasive sphygmomanometers—Part 1: Requirements and test methods for non-automated measurement type	ANSI/AAMI/ISO 81060–1:2007
3–81	Non-invasive sphygmomanometers - Part 2: Clinical validation of automated measurement type	ANSI/AAMI/ISO 81060–2:2009
3–82	Implants for surgery - Cardiac pacemakers - Part 3: Low-profile connectors [IS-I] for implantable pacemakers TECHNICAL CORRIGENDUM 1	IS0 5841 -3:2000 TECHNICAL CORRIGENDUM 1
C. Dental/ENT		
4–189	Dentistry—Soft lining materials for removable dentures—Part 1: Materials for short-term use	ISO 10139–1:2005 TECHNICAL CORRIGENDUM 1 2006–03–01
D. General		
5–56	Medical devices—Symbols to be used with medical device labels, labelling, and information to be supplied—Part 2: Symbol development, selection and validation	ISO 15223–2 First edition 2010–01–15
5–57	Human factors engineering—Design of medical devices	ANSI/AAMI HE75:2009
5–58	Medical electrical equipment—Part 1–11: General requirements for basic safety and essential performance—Collateral Standard: Requirements for medical electrical equipment and medical electrical systems used in the home healthcare environment	IEC 60601–1–11 Edition 1.0 2010–04
5–59	Medical devices - Symbols to be used with medical device labels, labelling and information to be supplied—Part 1: General requirements	ISO 15223–1 First Edition 2007
5–60	Medical electrical equipment - Part 1–2: General requirements for basic safety and essential performance - Collateral standard: Electromagnetic compatibility - Requirements and tests, Interpretation Sheet	IEC 60601–1–2 (2007) Third edition/I-SH 01
5–61	Medical devices - Symbols to be used with medical device labels, labeling, and information to be supplied—Part 1: General requirements	ANSI/AAMI/ISO 15223–1:2007
E. Materials		
8–194	Standard Test Method for Measurement of Camber, Cast, Helix and Direction of Helix of Coiled Wire	ASTM F 2754/F 2754M—09

TABLE 3.—NEW ENTRIES TO THE LIST OF RECOGNIZED STANDARDS—Continued

Recognition No.	Title of Standard[1]	Reference No. & Date
8–195	Standard Specification for Wrought Seamless Nickel-Titanium Shape Memory Alloy Tube for Medical Devices and Surgical Implants	ASTM F 2633–07
F. Ophthalmic		
10–61	Ophthalmic optics—Contact lenses—Part 1: Vocabulary, classification system and recommendations for labelling specifications AMENDMENT 1	ISO 18369–1 First edition 2006–08–05 AMENDMENT 1 2009–02–15
G. Orthopedic		
11–224	Standard Test Methods for Occipital-Cervical and Occipital-Cervical-Thoracic Spinal Implant Constructs in a Vertebrectomy Model	ASTM F 2706—08
H. Radiology		
12–212	Medical electrical equipment—Characteristics of digital X-ray imaging devices—Part 1: Determination of the detective quantum efficiency	IEC 62220–1 First Edition 2003–10
12–213	Medical electrical equipment—Characteristics of digital X-ray imaging devices—Part 1–2: Determination of the detective quantum efficiency—Detectors used in mammography	IEC 62220–1–2 First Edition 2007–06
12–214	Medical electrical equipment—Characteristics of digital X-ray imaging devices—Part 1–3: Determination of the detective quantum efficiency—Detectors used in dynamic imaging	IEC 62220–1–3 Edition 1.0 2008–06
12–215	Medical electrical equipment—Exposure index of digital X-ray imaging systems—Part 1: Definitions and requirements for general radiography	IEC 62494–1 Edition 1.0 2008–08
12–216	Medical electrical equipment - Medical image display systems - Part 1: Evaluation methods	IEC 62563–1 Edition 1.0 2009–12
I. Sterility		
14–289	Cleanrooms and associated controlled environments—Biocontamination control—Part 2: Evaluation and interpretation of biocontamination data	ISO 14698–2:2003 TECHNICAL CORRIGENDUM 1
J. Tissue Engineering		
15–20	Standard Guide for Characterization and Testing of Raw or Starting Biomaterials for Tissue-Engineered Medical Products	ASTM F 2027–08
15–21	Standard Guide for Characterization and Testing of Biomaterial Scaffolds Used in Tissue-Engineered Medical Products	ASTM F 2150–07
15–22	Standard Guide for Assessment of Surface Texture of Non-Porous Biomaterials in Two Dimensions	ASTM F 2791–00
15–23	Standard Guide for Quantitating Cell Viability within Biomaterial Scaffolds	ASTM F 2739–08
15–24	Standard Guide for Pre-clinical *in vivo* Evaluation in Critical Size Segmental Bone Defects	ASTM F 2721–09

[1] All standard titles in this table conform to the style requirements of the respective organizations.

IV. List of Recognized Standards

FDA maintains the Agency's current list of FDA recognized consensus standards in a searchable database that may be accessed directly at FDA's Internet site at *http://www.accessdata.fda.gov/scripts/cdrh/cfdocs/cfStandards/search.cfm*. FDA will incorporate the modifications and minor revisions described in this notice into the database and, upon publication in the **Federal Register**, this recognition of consensus standards will be effective. FDA will announce additional modifications and minor revisions to the list of recognized consensus standards, as needed, in the **Federal Register** once a year, or more often, if necessary.

V. Recommendation of Standards for Recognition by FDA

Any person may recommend consensus standards as candidates for recognition under the new provision of section 514 of the act by submitting such recommendations, with reasons for the recommendation, to the contact person (see **FOR FURTHER INFORMATION CONTACT**). To be properly considered, such recommendations should contain, at a minimum, the following information: (1) Title of the standard; (2) any reference number and date; (3) name and address of the national or international standards development organization; (4) a proposed list of devices for which a declaration of conformity to this standard should routinely apply; and (5) a brief identification of the testing or performance or other characteristics of the device(s) that would be addressed by a declaration of conformity.

VI. Electronic Access

You may obtain a copy of "Guidance on the Recognition and Use of Consensus Standards" by using the Internet. CDRH maintains a site on the Internet for easy access to information

including text, graphics, and files that you may download to a personal computer with access to the Internet. Updated on a regular basis, the CDRH home page includes the guidance as well as the current list of recognized standards and other standards related documents. After publication in the **Federal Register**, this notice announcing "Modification to the List of Recognized Standards, Recognition List Number: 025" will be available on the CDRH home page. You may access the CDRH home page at *http://www.fda.gov/MedicalDevices*.

You may access "Guidance on the Recognition and Use of Consensus Standards," and the searchable database for "FDA Recognized Consensus Standards" through the hyperlink at *http://www.fda.gov/MedicalDevices/DeviceRegulationandGuidance/Standards*.

This **Federal Register** document on modifications in FDA's recognition of consensus standards is available at *http://www.fda.gov/MedicalDevices/DeviceRegulationandGuidance/Standards/ucm123792.htm*.

VII. Submission of Comments and Effective Date

Interested persons may submit to the contact person (see **FOR FURTHER INFORMATION CONTACT**) either electronic or written comments regarding this document. It is only necessary to send one set of comments. It is no longer necessary to sent two copies of mailed comments. Comments are to be identified with the docket number found in brackets in the heading of this document. FDA will consider any comments received in determining whether to amend the current listing of modifications to the list of recognized standards, Recognition List Number: 025. These modifications to the list or recognized standards are effective upon publication of this notice in the **Federal Register**.

Dated: September 28, 2010.

Nancy K. Stade,

Deputy Director for Policy, Center for Devices and Radiological Health.

[FR Doc. 2010–24788 Filed 10–1–10; 8:45 am]

BILLING CODE 4160–01–S

DEPARTMENT OF HEALTH AND HUMAN SERVICES

National Institutes of Health

National Institute on Aging; Notice of Closed Meetings

Pursuant to section 10(d) of the Federal Advisory Committee Act, as amended (5 U.S.C. App.), notice is hereby given of the following meetings.

The meetings will be closed to the public in accordance with the provisions set forth in sections 552b(c)(4) and 552b(c)(6), Title 5 U.S.C., as amended. The grant applications and the discussions could disclose confidential trade secrets or commercial property such as patentable material, and personal information concerning individuals associated with the grant applications, the disclosure of which would constitute a clearly unwarranted invasion of personal privacy.

Name of Committee: National Institute on Aging Special Emphasis Panel, Relationships and Health.

Date: November 16, 2010.

Time: 1:30 p.m. to 5:30 p.m.

Agenda: To review and evaluate grant applications.

Place: National Institute on Aging, Gateway Building, 7201 Wisconsin Avenue, Suite 2C218, Bethesda, MD 20892. (Telephone Conference Call.)

Contact Person: Alfonso R. Latoni, PhD, Deputy Chief and Scientific Review Officer, Scientific Review Branch, National Institute on Aging, 7201 Wisconsin Avenue, Suite 2C218, Bethesda, MD 20892. 301–402–7702. *Alfonso.Latoni@nih.gov.*

Name of Committee: National Institute on Aging Special Emphasis Panel, Aging Bone and Muscle.

Date: November 18, 2010.

Time: 1 p.m. to 4:30 p.m.

Agenda: To review and evaluate grant applications.

Place: National Institute on Aging, Gateway Building, 7201 Wisconsin Avenue, Suite 2C212, Bethesda, MD 20892. (Telephone Conference Call.)

Contact Person: William Cruce, PhD, Scientific Review Officer, National Institute on Aging, Scientific Review Branch, Gateway Building 2C–212, 7201 Wisconsin Ave., Bethesda, MD 20814. 301–402–7704. *crucew@nia.nih.gov.*

Name of Committee: National Institute on Aging Special Emphasis Panel, Restless Leg Syndrome.

Date: November 22, 2010.

Time: 1 p.m. to 4 p.m.

Agenda: To review and evaluate grant applications.

Place: National Institute on Aging, Gateway Building, 7201 Wisconsin Avenue, Suite 2C212, Bethesda, MD 20892. (Telephone Conference Call.)

Contact Person: William Cruce, PhD, Scientific Review Officer, National Institute on Aging, Scientific Review Branch, Gateway Building 2C–212, 7201 Wisconsin Ave., Bethesda, MD 20814. 301–402–7704. *crucew@nia.nih.gov.*

(Catalogue of Federal Domestic Assistance Program Nos. 93.866, Aging Research, National Institutes of Health, HHS)

Dated: September 28, 2010.

Jennifer S. Spaeth,

Director, Office of Federal Advisory Committee Policy.

[FR Doc. 2010–24784 Filed 10–1–10; 8:45 am]

BILLING CODE 4140–01–P

DEPARTMENT OF HEALTH AND HUMAN SERVICES

National Institutes of Health

Center For Scientific Review; Amended Notice of Meeting

Notice is hereby given of a change in the meeting of the Center for Scientific Review Special Emphasis Panel, October 19, 2010, 11 a.m. to October 19, 2010, 5 p.m., National Institutes of Health, 6701 Rockledge Drive, Bethesda, MD 20892 which was published in the **Federal Register** on September 17, 2010, 75 FR 57042–57043.

The meeting will be two days—October 18, 2010, from 8 a.m. to October 19, 2010, 5 p.m. The meeting location remains the same. The meeting is closed to the public.

Dated: September 28, 2010.

Jennifer S. Spaeth,

Director, Office of Federal Advisory Committee Policy.

[FR Doc. 2010–24783 Filed 10–1–10; 8:45 am]

BILLING CODE 4140–01–P

DEPARTMENT OF HEALTH AND HUMAN SERVICES

Health Resources and Services Administration

Statement of Organization, Functions and Delegations of Authority

This notice amends Part R of the Statement of Organization, Functions and Delegations of Authority of the Department of Health and Human Services (HHS), Health Resources and Services Administration (HRSA) (60 FR 56605, as amended November 6, 1995; as last amended at 75 FR 58416–58417 dated September 24, 2010).

This notice reflects organizational changes to the Health Resources and Services Administration and updates the functional statement for the Bureau of Primary Health Care (RC). Specifically, this notice (1) Creates the Office of Administrative Management (RCM) and the Office of Training and Technical Assistance Coordination (RCS); (2) abolishes the Division of Health Information Technology State and Community Assistance (RCR); (3) renames the Office of Minority and Special Populations (RCG) to the Office

of Special Population Health (RCG); and (4) abolishes the Eastern Division (RCN), the Central Mid-Atlantic Division (RCP), and the Western Division (RCQ); and establishes the Northeast Division (RCU), Central Southeast Division (RCV), the North Central Division (RCT); and the Southwest Division (RCW), to better align the regional functions of the Bureau.

Chapter RC—Bureau of Primary Health Care

Section RC–10, Organization

Delete in its entirety and replace with the following:

The Office of the Associate Administrator (RC) is headed by the Associate Administrator, Bureau of Primary Health Care (BPHC), who reports directly to the Administrator, Health Resources and Services Administration. BPHC includes the following components:

(1) Office of the Associate Administrator (RC);

(2) Office of Administrative Management (RCM);

(3) Office of Training and Technical Assistance Coordination (RCS);

(4) Office of Policy and Program Development (RCH);

(5) Office of Quality and Data (RCK);

(6) Office of Special Population Health (RCG);

(7) Northeast Division (RCU);

(8) Central Southeast Division (RCV);

(9) North Central Division (RCT);

(10) Southwest Division (RCW); and

(11) Division of National Hansen's Disease Program (RC7).

Section RC–20, Functions

(1) Delete the functional statement for the Bureau of Primary Health Care (RC) and replace in its entirety.

Office of the Associate Administrator (RC)

Provides overall leadership, direction, coordination, and planning in support of BPHC programs. Specifically: (1) Establishes program goals, objectives and priorities, and provides oversight to their execution; (2) plans, directs, coordinates and evaluates BPHC-wide management activities; and (3) maintains effective relationships within HRSA and with other Department of Health and Human Services (HHS) organizations, other Federal agencies, State and local governments, and other public and private organizations concerned with primary health care, eliminating health disparities, and improving the health status of the Nation's underserved and vulnerable populations.

Office of Administrative Management (RCM)

Plans, directs and coordinates BPHC-wide administrative management activities. Specifically: (1) Serves as BPHC's principal source for administrative and management advice and assistance; (2) provides guidance and coordinates personnel activities for BPHC; (3) provides organization and management analysis, coordinating the allocation of personnel resources, developing policies and procedures for internal operations, interpreting and implementing BPHC management policies, procedures and systems; (4) develops and coordinates BPHC program and administrative delegations of authority activities; (5) provides guidance to BPHC on financial management activities; (6) provides BPHC-wide support services such as continuity of operations and emergency planning, contracts, procurement, supply management, equipment utilization, printing, property management, space management, records management, and management reports; (7) serves as BPHC Executive Secretariat; (8) serves as BPHC focal point for the design and implementation of management information systems to assess and improve program performance and internal operations; and (9) coordinates BPHC administrative management activities with other components within HRSA and HHS, and with other Federal agencies, State and local governments, and other public and private organizations, as appropriate.

Office of Training and Technical Assistance Coordination (RCS)

Serves as the organizational focus for the coordination of training and technical assistance activities for BPHC programs and staff. Specifically: (1) Leads and coordinates training and technical assistance activities and resources for BPHC programs and staff; (2) serves as BPHC principal contact and information resource for training and technical assistance; (3) identifies key training and technical assistance needs of BPHC programs and staff, and develops programs to address them; (4) manages training and technical assistance cooperative agreements and contracts; (5) coordinates BPHC technical assistance and training activities within HRSA and HHS, and with other Federal agencies, State and local governments, and other public and private organizations concerned with primary health care, eliminating health disparities, and improving the health status of the Nation's underserved and vulnerable populations; and (6) provides support and coordination for emergency preparedness and response.

Office of Policy and Program Development (RCH)

Serves as the organizational focus for the development of BPHC programs and policies. Specifically: (1) Leads and monitors the development and expansion of primary care programs, including health centers and other health systems; (2) identifies and provides assistance to communities, community-based organizations, and BPHC programs related to the development and expansion of primary care programs; (3) manages BPHC capital and loan guarantee programs; (4) leads and coordinates the analysis, development and drafting of policy impacting BPHC programs; (5) consults and coordinates with other components within HRSA and HHS, and with other Federal agencies, State and local governments, and other public and private organizations on issues affecting BPHC programs and policies; (6) performs environmental scanning on issues that affect BPHC programs; (7) monitors BPHC activities in relation to the HRSA and HHS Strategic Plan; and (8) serves as BPHC focal point for communication and program information.

Office of Quality and Data (RCK)

Serves as the organizational focus for BPHC program performance, clinical and operational quality improvement, data reporting, and program evaluation. Specifically: (1) Provides leadership for implementing BPHC clinical quality and performance improvement strategies/initiatives, including health information technology; (2) oversees BPHC Federal Tort Claims Act (FTCA) medical malpractice liability programs, reviewing clinical, quality improvement, risk management, and patient safety activities to improve policies and programs for primary health care services, including clinical information systems; (3) leads and coordinates BPHC accreditation and national quality recognition programs; (4) coordinates BPHC clinical, quality and performance reporting activities within HRSA and HHS, and with other Federal agencies, State and local governments, and other public and private organizations concerned with primary health care, eliminating health disparities, and improving the health status of the Nation's underserved and vulnerable populations; (5) identifies and provides assistance to BPHC programs around clinical, quality and performance reporting activities; and (6)

serves as BPHC focal point for the design and implementation of program evaluations.

Office of Special Population Health (RCG)

Serves as the organizational focus for the coordination of BPHC activities relating to the delivery of health services to special populations, including: migrant and seasonal farm workers, homeless persons and residents of public housing, school children, minorities and other vulnerable populations. Specifically: (1) Ensures that the needs and special circumstances of special populations and the provider organizations that serve them are addressed in BPHC programs and policies; (2) advises BPHC about the needs of special populations; (3) identifies and provides assistance to communities, community-based organizations and BPHC programs related to the development, delivery and expansion of services targeted to special populations; (4) coordinates BPHC activities for special populations within HRSA and HHS, and with other Federal agencies, State and local governments, and other public and private organizations concerned with primary health care, eliminating health disparities, and improving the health status of the Nation's underserved and vulnerable populations; and (5) provides support to the National Advisory Council on Migrant Health.

Northeast Division (RCU)

Manages BPHC primary health care service delivery programs and associated activities within HHS Regions I, II and III. Specifically: for Regions I, II and III, (1) Manages the post-award/designation administration of BPHC primary health care service delivery programs, including State-based training and technical assistance; (2) serves as BPHC representative to organizations receiving BPHC service delivery grants/designations; (3) promotes a continued focus on quality, cost-effective care for underserved and vulnerable populations; (4) identifies and provides assistance on program-related statutory/regulatory policy, and program reporting requirements; (5) monitors the performance of BPHC primary health care service delivery programs, making programmatic recommendations and providing assistance to improve performance, where appropriate; (6) reviews findings and recommendations of periodic and episodic grantee assessments, developing actions needed to assure continuity of services to underserved and vulnerable populations and appropriate use of Federal resources; (7) provides technical guidance to grantees on the management and integration of community-based systems of care, the adaptation of successful strategies/models, and the resolution of difficult issues; (8) conducts State and regional surveillance on issues that affect BPHC primary health care service delivery programs; and (9) provides consultation to and coordinates activities within HRSA and HHS, and with other Federal agencies, State and local governments, and other public and private organizations involved in the implementation of BPHC primary health care service delivery programs.

Central Southeast Division (RCV)

Manages BPHC primary health care service delivery programs and associated activities within HHS Regions IV and VII. Specifically: For regions IV and VII, (1) Manages the post-award/designation administration of BPHC primary health care service delivery programs, including State-based training and technical assistance; (2) serves as BPHC representative to organizations receiving BPHC service delivery grants/designations; (3) promotes a continued focus on quality, cost-effective care for underserved and vulnerable populations; (4) identifies and provides assistance on program-related statutory/regulatory policy, and program reporting requirements; (5) monitors the performance of BPHC primary health care service delivery programs, making programmatic recommendations and providing assistance to improve performance, where appropriate; (6) reviews findings and recommendations of periodic and episodic grantee assessments, developing actions needed to assure continuity of services to underserved and vulnerable populations and appropriate use of Federal resources; (7) provides technical guidance to grantees on the management and integration of community-based systems of care, the adaptation of successful strategies/models, and the resolution of difficult issues; (8) conducts State and regional surveillance on issues that affect BPHC primary health care service delivery programs; and (9) provides consultation to and coordinates activities within HRSA and HHS, and with other Federal agencies, State and local governments, and other public and private organizations involved in the implementation of BPHC primary health care service delivery programs.

North Central Division (RCT)

Manages BPHC primary health care service delivery programs and associated activities within HHS Regions V, VIII and X. Specifically: for Regions V, VIII and X, (1) Manages the post-award/designation administration of BPHC primary health care service delivery programs, including State-based training and technical assistance; (2) serves as BPHC representative to organizations receiving BPHC service delivery grants/designations; (3) promotes a continued focus on quality, cost-effective care for underserved and vulnerable populations; (4) identifies and provides assistance on program-related statutory/regulatory, policy, and program reporting requirements; (5) monitors the performance of BPHC primary health care service delivery programs, making programmatic recommendations and providing assistance to improve performance, where appropriate; (6) reviews findings and recommendations of periodic and episodic grantee assessments, developing actions needed to assure continuity of services to underserved and vulnerable populations and appropriate use of Federal resources; (7) provides technical guidance to grantees on the management and integration of community-based systems of care, the adaptation of successful strategies/models, and the resolution of difficult issues; (8) conducts State and regional surveillance on issues that affect BPHC primary health care service delivery programs; and (9) provides consultation to and coordinates activities within HRSA and HHS, and with other Federal agencies, State and local governments, and other public and private organizations involved in the implementation of BPHC primary health care service delivery programs.

Southwest Division (RCW)

Manages BPHC primary health care service delivery programs and associated activities within HHS Regions VI and IX. Specifically: for Regions VI and IX, (1) Manages the post-award/designation administration of BPHC primary health care service delivery programs, including State-based training and technical assistance; (2) serves as BPHC representative to organizations receiving BPHC service delivery grants/designations; (3) promotes a continued focus on quality, cost-effective care for underserved and vulnerable populations; (4) identifies and provides assistance on program-related statutory/regulatory policy, and program reporting requirements; (5) monitors the performance of BPHC primary health care service delivery programs, making programmatic recommendations and providing assistance to improve performance,

where appropriate; (6) reviews findings and recommendations of periodic and episodic grantee assessments, developing actions needed to assure continuity of services to underserved and vulnerable populations and appropriate use of Federal resources; (7) provides technical guidance to grantees on the management and integration of community-based systems of care, the adaptation of successful strategies/models, and the resolution of difficult issues; (8) conducts State and regional surveillance on issues that affect BPHC primary health care service delivery programs; and (9) provides consultation to and coordinates activities within HRSA and HHS, and with other Federal agencies, State and local governments, and other public and private organizations involved in the implementation of BPHC primary health care service delivery programs.

Division of National Hansen's Disease Program (RC7)

Manages the National Hansen's Disease Program in accordance with regulations of the Public Health Service. Specifically: (1) Provides care and treatment for persons with Hansen's disease, including managing a national outpatient health care delivery program; (2) conducts research and provides education and training on Hansen's disease; and (3) provides consultation to and coordinates activities within HRSA and HHS, and with other Federal agencies, State and local governments, and other public and private organizations involved in Hansen's disease activities.

Section RC–30, Delegations of Authority

All delegations of authority and re-delegations of authority made to HRSA officials that were in effect immediately prior to this reorganization, and that are consistent with this reorganization, shall continue in effect pending further re-delegation.

This reorganization is upon date of signature.

Dated: September 27, 2010.

Mary K. Wakefield,

Administrator.

[FR Doc. 2010–24749 Filed 10–1–10; 8:45 am]

BILLING CODE 4165–15–P

DEPARTMENT OF HOMELAND SECURITY

[Docket No. DHS–2010–0079]

National Protection and Programs Directorate; National Infrastructure Advisory Council

AGENCY: National Protection and Programs Directorate, DHS.

ACTION: Committee Management; Notice of Federal Advisory Council Meeting.

SUMMARY: The National Infrastructure Advisory Council (NIAC) will meet on Tuesday, October 19, 2010, at the Hilton Washington Embassy Row, 2015 Massachusetts Ave, NW., Washington, DC 20036.

DATES: The NIAC will meet Tuesday, October 19, 2010, from 1:30 p.m. to 4:30 p.m. Please note that the meeting may close early if the committee has completed its business. For additional information, please consult the NIAC Web site, *http://www.dhs.gov/niac,* or contact the NIAC Secretariat by phone at 703–235–2888 or by e-mail at *NIAC@dhs.gov*.

ADDRESSES: The meeting will be held at the Hilton Washington Embassy Row, 2015 Massachusetts Ave., NW., Washington, DC 20036.

SUPPLEMENTARY INFORMATION: Notice of this meeting is given under the Federal Advisory Committee Act, 5 U.S.C. App. (Pub. L. 92–463). The NIAC shall provide the President through the Secretary of Homeland Security with advice on the security of the critical infrastructure sectors and their information systems.

The NIAC will meet to address issues relevant to the protection of critical infrastructure as directed by the President. At this meeting the committee will receive work from two NIAC working groups to review, deliberate on, and provide further direction to the working groups.

Meeting Agenda

I. Opening of Meeting
II. Roll Call of Members
III. Opening Remarks and Introductions
IV. Approval of July 13, 2010 Minutes
V. Deliberation: *A Framework for Establishing Critical Infrastructure Resilience Goals*
VI. Deliberation: *Optimization of Resources for Mitigating Infrastructure Disruptions*
VII. Discussion of Potential New Study Topics
VIII. Public comment
IX. Closing Remarks
X. Adjournment

Procedural

While this meeting is open to the public, participation in the NIAC deliberations is limited to committee members and appropriate Federal Government officials. Discussions may include committee members, appropriate Federal Government officials, and other invited persons attending the meeting to provide information that may be of interest to the council.

Immediately following the committee member deliberation and discussion period, there will be a limited time period for public comment on any listed agenda items only. Relevant public comments may be submitted in writing or presented in person for the Council to consider. Be aware that off-topic questions or comments will not be permitted or discussed. In person presentations will be limited to three minutes per speaker, with no more than 30 minutes for all speakers. Parties interested in presenting in person must register no less than 15 minutes prior to the beginning of the meeting, at the meeting location. Oral presentations will be permitted based upon the order of registration; all registrants may not be able to speak if time does not permit. Written comments may be sent to Nancy Wong, Department of Homeland Security, National Protection and Programs Directorate, 245 Murray Lane, Mail Stop 0607, Washington, DC 20598–0607. Written comments must be received by Nancy Wong by no later than October 12, 2010, identified by **Federal Register** Docket Number DHS–2010–0079 and may be submitted by any *one* of the following methods:

- *Federal eRulemaking Portal: http://www.regulations.gov*. Follow the instructions for submitting written comments.
- *E-mail: NIAC@dhs.gov*. Include the docket number in the subject line of the message.
- *Fax:* 703–603–5098
- *Mail:* Nancy Wong, National Protection and Programs Directorate, Department of Homeland Security, 245 Murray Lane, Mail Stop 0607, Washington, DC 20528–0607.

Instructions: All written submissions received must include the words "Department of Homeland Security" and the docket number for this action. Written comments received will be posted without alteration at *http://www.regulations.gov,* including any personal information provided.

Docket: For access to the docket to read background documents or comments received by the NIAC, go to *http://www.regulations.gov*.

Information on Services for Individuals with Disabilities:

For information on facilities or services for individuals with disabilities or to request special assistance at the meeting, contact the NIAC Secretariat at 703–235–2888 as soon as possible.

FOR FURTHER INFORMATION CONTACT: Nancy Wong, National Infrastructure Advisory Council Designated Federal Officer, Department of Homeland Security, telephone 703–235–2888.

Signed: September 27, 2010.

Caitlin Durkovich,

Representative Designated Federal Officer for the NIAC.

[FR Doc. 2010–24744 Filed 10–1–10; 8:45 am]

BILLING CODE 9110–9P–P

DEPARTMENT OF HOMELAND SECURITY

Federal Emergency Management Agency

[Docket ID: FEMA–2010–0057]

Agency Information Collection Activities: Proposed Collection; Comment Request, OMB No. 1660–0072; Mitigation Grants Program/e-Grants

AGENCY: Federal Emergency Management Agency, DHS.

ACTION: Notice; 60-day notice and request for comments; extension, without change, of a currently approved information collection; OMB No. 1660–0072; No Form.

SUMMARY: The Federal Emergency Management Agency, as part of its continuing effort to reduce paperwork and respondent burden, invites the general public and other Federal agencies to take this opportunity to comment on a proposed revision of a currently approved information collection. In accordance with the Paperwork Reduction Act of 1995, this Notice seeks comments concerning this collection that is used by: (1) Applicants and sub-applicants to apply for and report on e-Grant awards; and (2) the Federal Emergency Management Agency to evaluate, award, and monitor expenditures and program/project performance for Flood Mitigation Assistance program, Severe Repetitive Loss, Repetitive Flood Claim, and Pre-Disaster Mitigation activities.

DATES: Comments must be submitted on or before December 3, 2010.

ADDRESSES: To avoid duplicate submissions to the docket, please use only one of the following means to submit comments:

(1) *Online.* Submit comments at *http://www.regulations.gov* under Docket ID FEMA–2010–0057. Follow the instructions for submitting comments.

(2) *Mail.* Submit written comments to Docket Manager, Office of Chief Counsel, DHS/FEMA, 500 C Street, SW., Room 835, Washington, DC 20472–3100.

(3) *Facsimile.* Submit comments to (703) 483–2999.

(4) *E-mail.* Submit comments to *FEMA–POLICY@dhs.gov.* Include Docket ID FEMA–2010–0057 in the subject line.

All submissions received must include the agency name and Docket ID. Regardless of the method used for submitting comments or material, all submissions will be posted, without change, to the Federal eRulemaking Portal at *http://www.regulations.gov,* and will include any personal information you provide. Therefore, submitting this information makes it public. You may wish to read the Privacy Act notice that is available via the link in the footer of *http://www.regulations.gov.*

FOR FURTHER INFORMATION CONTACT: Cecelia Rosenberg, Grants Policy Chief, Federal Insurance and Mitigation Administration, 202–646–3321 for additional information. You may contact the Records Management Division for copies of the proposed collection of information at facsimile number (202) 646–3347 or e-mail address: *FEMA–Information-Collections-Management@dhs.gov.*

SUPPLEMENTARY INFORMATION: This collection of information is necessary to implement grants for the Flood Mitigation Assistance (FMA) program, Severe Repetitive Loss (SRL) program, Repetitive Flood Claims (RFC) program and the Pre-Disaster Mitigation (PDM) program.

The FMA program is authorized by section 1366 of the National Flood Insurance Act of 1968, 42 U.S.C. 4104c, as amended by the National Flood Insurance Reform Act of 2004 (NFIA), Public Law 108–264. The FMA program, under 44 CFR Part 79, is designed to award grants so that measures are taken to reduce or eliminate the long-term risk of flood damage to buildings, manufactured homes, and other structures insurable under the National Flood Insurance Program (NFIP).

The SRL program is authorized by section 1361A of the NFIA of 2004, 42 U.S.C. 4102a, with the goal of reducing flood damages to residential properties that have experienced severe repetitive losses under flood insurance coverage. The program under 44 CFR Part 79, focuses on efforts that will result in the greatest savings to the NFIF in the shortest period of time.

The RFC program is authorized by the NFIA of 2004 (Pub. L. 108–264), 42 U.S.C. 4030. The NFIA authorizes funding annually to award grants for actions that reduce flood damages to individual properties for which one or more claim payments for losses have been made.

The PDM program is authorized by section 203 of the Robert T. Stafford Disaster Relief and Emergency Assistance Act (the Act), 42 U.S.C. 5133, as amended by section 102 of the Disaster Mitigation Act of 2000 (DMA), Public Law 106–390, 114 Stat. 1552. The PDM program provides grants for cost-effective mitigation actions prior to a disaster event to reduce overall risks to the population and structures, while also reducing reliance on funding from actual disaster declarations.

In accordance with OMB Circular A–102, FEMA requires that all parties interested in receiving FEMA mitigation grants submit an application package for grant assistance. The e-Grants system has been developed and revamped to meet the intent of the e-Government initiative, authorized by Public Law 106–107. This initiative requires that all government agencies both streamline grant application processes and provide for the means to electronically create, review, and submit a grant application via the Internet.

Collection of Information

Title: Mitigation Grant Program/eGrants.

Type of Information Collection: Extension, without change, of a currently approved information collection.

OMB Number: 1660–0072.

Form Titles and Numbers: No Forms.

Abstract: The FEMA mitigation grant programs—Flood Mitigation Assistance, Severe Repetitive Loss, Repetitive Flood Claims, and Pre-Disaster Mitigation—all utilize an automated grant application and management system known as e-Grants to apply for these grants. These programs provide funding to allow for the reduction or elimination of the risks to life and property from hazards. The e-Grants system also provides the mechanism to provide quarterly reports of the financial status of the project and the final closeout report.

Affected Public: State, local and Tribal Governments.

Estimated Total Annual Burden Hours: 43,848 Hours.

ESTIMATED ANNUALIZED BURDEN HOURS AND COSTS

Type of respondent	Form name/Form number	No. of respondents	No. of responses per respondent	Total no. of responses	Avg. burden per response (in hours)	Total annual burden (in hours)	Avg. hourly wage rate	Total annual respondent cost
	FMA:	.....	.....	.....	.....	.....	.....	.....
State, local or Tribal Government.	Benefit-Cost Determination.	56	2	112	5	560	$43.54	$24,382
State, local or Tribal Government.	Environmental Review.	56	2	112	7.5	840	43.54	36,574
State, local or Tribal Government.	Project Narrative-Subgrant Application.	56	4	224	12	2,688	43.54	117,036
Subtotal		56	.....	448	.....	4,088	.....	177,992
	RFC:							
State, local or Tribal Government.	Benefit-Cost Determination.	56	1	56	5	280	43.54	12,191
State, local or Tribal Government.	Environmental Review.	56	1	56	7.5	420	43.54	18,287
State, local or Tribal Government.	Project Narrative-Subgrant Application.	56	2	112	12	1,344	43.54	58,518
Subtotal		56	.....	224	.....	2,044	.....	88,996
	SRL:							
State, local or Tribal Government.	Benefit-Cost Determination.	56	7	392	5	1960	43.54	85,338
State, local or Tribal Government.	Environmental Review.	56	7	392	7.5	2,940	43.54	128,008
State, local or Tribal Government.	Project Narrative-Subgrant Application.	56	8	448	12	5,376	43.54	234,071
Subtotal		56	.....	1,232	.....	10,276	.....	447,417
	PDM:							
State, local or Tribal Government.	Benefit-Cost Determination.	56	20	1,120	5	5,600	43.54	243,824
State, local or Tribal Government.	Environmental Review.	56	20	1,120	7.5	8,400	43.54	365,736
State, local or Tribal Government.	Project Narrative-Subgrant Application.	56	20	1,120	12	13,440	43.54	585,178
Subtotal	.....	56	.....	3,360	.....	27,440	.....	1,194,738
Total	.....	56	.....	5,264	.....	43,848	.....	1,909,143

Estimated Cost: There are no operation and maintenance, or capital and start-up costs associated with this collection of information.

Comments

Comments may be submitted as indicated in the **ADDRESSES** caption above. Comments are solicited to: (a) Evaluate whether the proposed data collection is necessary for the proper performance of the agency, including whether the information shall have practical utility; (b) evaluate the accuracy of the agency's estimate of the burden of the proposed collection of information, including the validity of the methodology and assumptions used; (c) enhance the quality, utility, and clarity of the information to be collected; and (d) minimize the burden of the collection of information on those who are to respond, including through the use of appropriate automated, electronic, mechanical, or other technological collection techniques or other forms of information technology, *e.g.,* permitting electronic submission of responses.

Lesia M. Banks,

Director, Records Management Division, Mission Support Bureau, Federal Emergency Management Agency, Department of Homeland Security.

[FR Doc. 2010–24768 Filed 10–1–10; 8:45 am]

BILLING CODE 9110–13–P

DEPARTMENT OF HOMELAND SECURITY

U.S. Customs and Border Protection

Agency Information Collection Activities: Application for Exportation of Articles Under Special Bond

AGENCY: U.S. Customs and Border Protection, Department of Homeland Security.

ACTION: 30-Day notice and request for comments; Extension of an existing information collection: 1651–0004.

SUMMARY: U.S. Customs and Border Protection (CBP) of the Department of Homeland Security will be submitting the following information collection request to the Office of Management and Budget (OMB) for review and approval in accordance with the Paperwork

Reduction Act: Application for Exportation of Articles under Special Bond (CBP Form 3495). This is a proposed extension of an information collection that was previously approved. CBP is proposing that this information collection be extended with a change to the burden hours. This document is published to obtain comments from the public and affected agencies. This proposed information collection was previously published in the **Federal Register** on August 6, 2010 (Volume 75, Page 47608), allowing for a 60-day comment period. This notice allows for an additional 30 days for public comments. This process is conducted in accordance with 5 CFR 1320.10.

DATES: Written comments should be received on or before November 3, 2010.

ADDRESSES: Interested persons are invited to submit written comments on this proposed information collection to the Office of Information and Regulatory Affairs, Office of Management and Budget. Comments should be addressed to the OMB Desk Officer for Customs and Border Protection, Department of Homeland Security, and sent via electronic mail to *oira_submission@omb.eop.gov* or faxed to (202) 395–5806.

SUPPLEMENTARY INFORMATION: U.S. Customs and Border Protection (CBP) encourages the general public and affected Federal agencies to submit written comments and suggestions on proposed and/or continuing information collection requests pursuant to the Paperwork Reduction Act (Pub. L. 104–13). Your comments should address one of the following four points:

(1) Evaluate whether the proposed collection of information is necessary for the proper performance of the functions of the agency/component, including whether the information will have practical utility;

(2) Evaluate the accuracy of the agencies/components estimate of the burden of The proposed collection of information, including the validity of the methodology and assumptions used;

(3) Enhance the quality, utility, and clarity of the information to be collected; and

(4) Minimize the burden of the collections of information on those who are to respond, including the use of appropriate automated, electronic, mechanical, or other technological techniques or other forms of information.

Title: Application for Exportation of Articles under Special Bond.

OMB Number: 1651–0004.

Form Number: Form 3495.

Abstract: This information is submitted on CBP Form 3495. This form is used by importers (and their agents) to notify CBP that the importer intends to export goods that were subject to a duty exemption based on a temporary stay in this country. It also serves as a permit to export in order to satisfy the importer's obligation to export the same goods and thereby get a duty exemption. Form 3495 is accessible at *http://www.cbp.gov/xp/cgov/toolbox/forms/*.

Current Actions: This submission is being made to extend the expiration date with no change to the burden hours.

Type of Review: Extension without change.

Affected Public: Businesses.

Estimated Number of Respondents: 500.

Estimated Number of Responses per Respondent: 30.

Estimated Total Annual Responses: 15,000.

Estimated Time per Response: 8 minutes.

Estimated Total Annual Burden Hours: 2,000.

If additional information is required contact: Tracey Denning, U.S. Customs and Border Protection, Regulations and Rulings, Office of International Trade, 799 9th Street, NW., 5th Floor, Washington, DC 20229–1177, at 202–325–0265.

Dated: September 28, 2010.

Tracey Denning,

Agency Clearance Officer, U.S. Customs and Border Protection.

[FR Doc. 2010–24778 Filed 10–1–10; 8:45 am]

BILLING CODE 9111–14–P

DEPARTMENT OF HOUSING AND URBAN DEVELOPMENT

[Docket No. FR–5374–N–17]

Buy American Exceptions Under the American Recovery and Reinvestment Act of 2009

AGENCY: Office of the Assistant Secretary for Public and Indian Housing, HUD.

ACTION: Notice.

SUMMARY: In accordance with the American Recovery and Reinvestment Act of 2009 (Pub. L. 111–05, approved February 17, 2009) (Recovery Act), and implementing guidance of the Office of Management and Budget (OMB), this notice advises that certain exceptions to the Buy American requirement of the Recovery Act have been determined applicable for work using Capital Fund Recovery Formula and Competition (CFRFC) grant funds. Specifically, exceptions were granted to the Cambridge Housing Authority for the purchase and installation of energy efficient bathroom exhaust fans for the Lincoln Way and Jackson Gardens projects, and for the purchase and installation of solar panels and linoleum for its Lyndon B. Johnson Apartments project. An exception was also granted to the Housing Authority of the City of Columbia in Columbia, MO, for the purchase and installation of a Variable Refrigerant Volume Heating, Ventilation and Air Conditioning (VRV HVAC) system for the Paquin Tower project.

FOR FURTHER INFORMATION CONTACT: Dominique G. Blom, Deputy Assistant Secretary for Public Housing Investments, Office of Public Housing Investments, Office of Public and Indian Housing, Department of Housing and Urban Development, 451 7th Street, SW., Room 4130, Washington, DC, 20410–4000, telephone number 202–402–8500 (this is not a toll-free number). Persons with hearing- or speech-impairments may access this number through TTY by calling the toll-free Federal Information Relay Service at 800–877–8339.

SUPPLEMENTARY INFORMATION: Section 1605(a) of the Recovery Act provides that none of the funds appropriated or made available by the Recovery Act may be used for a project for the construction, alteration, maintenance, or repair of a public building or public work unless all of the iron, steel, and manufactured goods used in the project are produced in the United States. Section 1605(b) provides that the Buy American requirement shall not apply in any case or category in which the head of a Federal department or agency finds that: (1) Applying the Buy American requirement would be inconsistent with the public interest; (2) iron, steel, and the relevant manufactured goods are not produced in the U.S. in sufficient and reasonably available quantities or of satisfactory quality; or (3) inclusion of iron, steel, and manufactured goods will increase the cost of the overall project by more than 25 percent. Section 1605(c) provides that if the head of a Federal department or agency makes a determination pursuant to section 1605(b), the head of the department or agency shall publish a detailed written justification in the **Federal Register**.

In accordance with section 1605(c) of the Recovery Act and OMB's implementing guidance published on April 23, 2009 (74 FR 18449), this notice advises the public that, on September 7, 2010, HUD granted the following three

exceptions to the Buy American requirement:

1. *Cambridge Housing Authority.* Upon request of the Cambridge Housing Authority, HUD granted an exception to applicability of the Buy American requirements with respect to work, using CFRFC grant funds, in connection with the Lincoln Way and Jackson Garden projects. The exception was granted by HUD on the basis that the relevant manufactured goods (energy efficient bathroom exhaust fans) are not produced in the U.S. in sufficient and reasonably available quantities or of satisfactory quality.

2. *Cambridge Housing Authority.* Upon request of the Cambridge Housing Authority, HUD granted an exception to applicability of the Buy American requirements with respect to work, using CFRFC grant funds, in connection with the Lyndon B. Johnson Apartments project. The exception was granted by HUD on the basis that the relevant manufactured goods (solar panels and linoleum) are not produced in the U.S. in sufficient and reasonably available quantities or of satisfactory quality.

3. *Housing Authority of the City of Columbia.* Upon request of the Housing Authority of the City of Columbia, HUD granted an exception to applicability of the Buy American requirements with respect to work, using CFRFC grant funds, in connection with the Paquin Towers project. The exception was granted by HUD on the basis that the relevant manufactured goods (a VRV HVAC system) is not produced in the U.S. in sufficient and reasonably available quantities or of satisfactory quality.

Dated: September 24, 2010.

Deborah Hernandez,

General Deputy Assistant Secretary for Public and Indian Housing.

[FR Doc. 2010–24747 Filed 10–1–10; 8:45 am]

BILLING CODE 4210–67–P

DEPARTMENT OF HOUSING AND URBAN DEVELOPMENT

[Docket No. FR–5411–N–03]

Credit Watch Termination Initiative Termination of Origination Approval Agreements

AGENCY: Office of the Assistant Secretary for Housing—Federal Housing Commissioner, HUD.

ACTION: Notice.

SUMMARY: This notice advises of the cause and effect of termination of Origination Approval Agreements taken by HUD's Federal Housing Administration (FHA) against HUD-approved mortgagees through the FHA Credit Watch Termination Initiative. This notice includes a list of mortgagees which have had their Origination Approval Agreements terminated.

FOR FURTHER INFORMATION CONTACT: The Quality Assurance Division, Office of Housing, Department of Housing and Urban Development, 451 Seventh Street, SW., Room B133–P3214, Washington, DC 20410–8000; telephone (202) 708–2830 (this is not a toll-free number). Persons with hearing or speech impairments may access that number through TTY by calling the Federal Information Relay Service at (800) 877–8339.

SUPPLEMENTARY INFORMATION: HUD has the authority to address deficiencies in the performance of lenders' loans as provided in HUD's mortgagee approval regulations at 24 CFR

202.3. On May 17, 1999 HUD published a notice (64 FR 26769), on its procedures for terminating Origination Approval Agreements with FHA lenders and placement of FHA lenders on Credit Watch status (an evaluation period). In the May 17, 1999 notice, HUD advised that it would publish in the **Federal Register** a list of mortgagees, which have had their Origination Approval Agreements terminated.

Termination of Origination Approval Agreement: Approval of a mortgagee by HUD/FHA to participate in FHA mortgage insurance programs includes an Origination Approval Agreement (Agreement) between HUD and the mortgagee. Under the Agreement, the mortgagee is authorized to originate single-family mortgage loans and submit them to FHA for insurance endorsement. The Agreement may be terminated on the basis of poor performance of FHA-insured mortgage loans originated by the mortgagee. The termination of a mortgagee's Agreement is separate and apart from any action taken by HUD's Mortgagee Review Board under HUD's regulations at 24 CFR part 25.

Cause: HUD's regulations permit HUD to terminate the Agreement with any mortgagee having a default and claim rate for loans endorsed within the preceding 24 months that exceeds 200 percent of the default and claim rate within the geographic area served by a HUD field office, and also exceeds the national default and claim rate. For the 43rd review period, HUD is terminating the Agreement of mortgagees whose default and claim rate exceeds both the national rate and 200 percent of the field office rate.

Effect: Termination of the Agreement precludes that branch(es) of the mortgagee from originating FHA-insured single-family mortgages within the area of the HUD field office(s) listed in this notice. Mortgagees authorized to purchase, hold, or service FHA insured mortgages may continue to do so.

Loans that closed or were approved before the termination became effective may be submitted for insurance endorsement. Approved loans are those already underwritten and approved by a DE underwriter, and cases covered by a firm commitment issued by HUD. Cases at earlier stages of processing cannot be submitted for insurance by the terminated branch; however, they may be transferred for completion of processing and underwriting to another FHA insured mortgagee with direct endorsement approval for the area covered by the termination. Mortgagees are obligated to continue to pay existing insurance premiums and meet all other obligations associated with insured mortgages.

A terminated mortgagee may apply for reinstatement of the Origination Approval Agreement if the Approval for the affected branch or branches has been terminated for at least six months and the mortgagee continues to be an approved mortgagee meeting the requirements of 24 CFR 202.5, 202.6, 202.7, 202.8 and 202.12. However, Mortgagee Letter 2010–20 and Final Rule 5356–F–02 at 24 CFR 202 eliminates FHA approval for loan correspondents after December 31, 2010. Therefore, HUD will not accept requests for reinstatement from loan correspondents after that date. The mortgagee's application for reinstatement must be in a format prescribed by the Secretary and signed by the mortgagee. In addition, the application must be accompanied by an independent analysis of the terminated office's operations as well as its mortgage production, specifically including the FHA-insured mortgages cited in its termination notice. This independent analysis shall identify the underlying cause for the mortgagee's high default and claim rate. The analysis must be prepared by an independent Certified Public Accountant (CPA) qualified to perform audits under Government Auditing Standards as provided by the Government Accountability Office. The mortgagee must also submit a written corrective action plan to address each of the issues identified in the CPA's report, along with evidence that the plan has been implemented. The application for a new Agreement should be in the form of a letter, accompanied by the CPA's

report and corrective action plan. The request should be sent to the Director, Office of Lender Activities and Program Compliance, 451 Seventh Street, SW., Room B133–P3214, Washington, DC 20410–8000 or by courier to 490 L'Enfant Plaza, East, SW., Suite 3214, Washington, DC 20024–8000.

Action: The following mortgagees have had their Origination Agreements terminated by HUD:

Mortgagee name	Mortgagee branch address	HUD office jurisdictions	Termination effective date	Homeownership centers
Access National Mortgage Corporation.	1800 Robert Fulton Drive, Ste 350, Reston, VA 20191.	Atlanta	7/9/2010	Atlanta.
Access National Mortgage Corporation.	1800 Robert Fulton Drive, Ste 350, Reston, VA 20191.	Boston	7/9/2010	Philadelphia.
Access National Mortgage Corporation.	1800 Robert Fulton Drive, Ste 350, Reston, VA 20191.	Greensboro	7/9/2010	Atlanta.
Allied Home Mortgage Capital Corporation.	6110 Pinemont Drive, Ste 215, Houston, TX 77092.	Baltimore	5/27/2010	Philadelphia.
1st Continental Mortgage Inc	2691 E. Oakland Park Blvd., Ste 2, Ft. Lauderdale, FL 33306.	Tampa	5/20/2010	Atlanta.
American First Mortgage LLC	7155 Kerr Plaza, Olive Branch, MS 38654	Memphis	5/20/2010	Atlanta.
Amerinet Financial LLC	16201 Trade Zone Ave, Ste 101, Upper Marlboro, MD 20774.	Washington	5/20/2010	Philadelphia.
Associated Capital Resources Inc	706 East Bell Road, Ste 100, Phoenix, AZ 85022	Phoenix	5/20/2010	Santa Ana.
Castle Home Mortgage Corp	1600 Route 22, East, Union, NJ 07083	Newark	5/20/2010	Philadelphia.
Dell Franklin Financial LLC	7061 Columbia Gateway Dr, Ste 110, Columbia, MD 21046.	Washington	5/20/2010	Philadelphia.
Dell Franklin Financial LLC	7061 Columbia Gateway Dr, Ste 110, Columbia, MD 21046.	Richmond	5/20/2010	Philadelphia.
EMI Equity Mortgage INC	1651 Ave Ponce De Leon, San Juan, PR 00909	Caribbean	5/28/2010	Atlanta.
First Mortgage Group INC	118 Moulton Street East, Ste 2, Decatur, AL 35601.	Birmingham	5/28/2010	Atlanta.
Fox Valley Mortgage Group	455 East Main Street, East Dundee, IL 60118	Chicago	7/9/2010	Philadelphia.
Hanover Funding INC	7 Kingsbridge Road, Fairfield, NJ 07004	Newark	5/20/2010	Philadelphia.
JPMorgan Chase Bank NA	900 Stewart Avenue, Garden City, NY 11530	Atlanta	7/11/2010	Atlanta.
JPMorgan Chase Bank NA	900 Stewart Avenue, Garden City, NY 11530	New Orleans	7/11/2010	Denver.
Key Financial Corporation	3631 131st Avenue North, Clearwater, FL 33762–4263.	Baltimore	7/1/2010	Philadelphia.
Midwest Funding Group	6343 Presidential Gateway, Columbus, OH 43231–7695.	Columbus	5/20/2010	Atlanta.
Mortgage Plus INC	67 Walnut Avenue, Ste 310, Clark, NJ 07066–1687.	Newark	5/28/2010	Philadelphia.
Pacific Coast Mortgage INC	6991 East Camelback Rd., Ste C250, Scottsdale, AZ 85251–2452.	Phoenix	5/28/2010	Santa Ana.
Preferred Lending Group LLC	9700 63rd Ave. N Ste 205, Maple Grove, MN 55369.	Minneapolis	6/1/2010	Denver.
Real Estate Mortgage Network, Inc.	70 Grand Avenue, River Edge, NJ 07661	Atlanta	7/2/2010	Atlanta.
Residential Mortgage Corp	1332 Andrea Street, Bowling Green, KY 42104–3334.	Louisville	6/1/2010	Atlanta.
Summit Funding	2601 Fair Oaks Boulevard, Sacramento, CA 95864.	Fort Worth	7/1/2010	Denver.

Dated: September 23, 2010.

David H. Stevens,

Assistant Secretary for Housing—Federal Housing Commissioner.

[FR Doc. 2010–24827 Filed 10–1–10; 8:45 am]

BILLING CODE 4210–67–P

DEPARTMENT OF HOUSING AND URBAN DEVELOPMENT

[Docket No. FR–5411–N–04]

Credit Watch Termination Initiative Termination of Direct Endorsement (DE) Approval

AGENCY: Office of the Assistant Secretary for Housing—Federal Housing Commissioner, HUD.

ACTION: Notice.

SUMMARY: This notice advises of the cause and effect of termination of Direct Endorsement (DE) Approval taken by HUD's Federal Housing Administration (FHA) against HUD-approved mortgagees through the FHA Credit Watch Termination Initiative. This notice includes a list of mortgagees which have had their DE Approval terminated.

FOR FURTHER INFORMATION CONTACT: The Quality Assurance Division, Office of Housing, Department of Housing and Urban Development, 451 Seventh Street, SW., Room B133–P3214, Washington, DC 20410–8000; telephone (202) 708–2830 (this is not a toll-free number). Persons with hearing or speech impairments may access that number through TTY by calling the Federal Information Relay Service at (800) 877–8339.

SUPPLEMENTARY INFORMATION: HUD has the authority to address deficiencies in the performance of lenders' loans as provided in HUD's mortgagee approval regulations at 24 CFR 202.3. On May 17, 1999 HUD published a notice (64 FR 26769), on its procedures for terminating Origination Approval Agreements with FHA lenders and placement of FHA lenders on Credit Watch status (an evaluation period). In the May 17, 1999 notice, HUD advised that it would publish in the **Federal Register** a list of mortgagees, which have had their Approval Agreements terminated. On January 21, 2010 HUD issued Mortgagee Letter 2010–03 which advised the extended procedures for

terminating Underwriting Authority of Direct Endorsement mortgagees.

Termination of Direct Endorsement Approval: Approval of a DE mortgagee by HUD/FHA authorizes the mortgagee to underwrite single family mortgage loans and submit them to FHA for insurance endorsement. The Approval may be terminated on the basis of poor performance of FHA-insured mortgage loans underwritten by the mortgagee. The termination of a mortgagee's DE Approval is separate and apart from any action taken by HUD's Mortgagee Review Board under HUD's regulations at 24 CFR part 25.

Cause: HUD's regulations permit HUD to terminate the DE Approval with any mortgagee having a default and claim rate for loans endorsed within the preceding 24 months that exceeds 300 percent of the default and claim rate within the geographic area served by a HUD field office, and also exceeds the national default and claim rate. For quarterly review period ending December 31, 2009, HUD is terminating the DE Approval of mortgagees whose default and claim rate exceeds both the national rate and 300 percent of the field office rate.

Effect: Termination of the DE Approval precludes the mortgagee from underwriting FHA-insured single-family mortgages within the area of the HUD field office(s) listed in this notice. Mortgagees authorized to purchase, hold, or service FHA insured mortgages may continue to do so.

Loans that closed or were approved before the Termination became effective may be submitted for insurance endorsement. Approved loans are those already underwritten and approved by a DE underwriter, and cases covered by a firm commitment issued by HUD. Cases at earlier stages of processing cannot be submitted for insurance by the terminated mortgagee; however, the cases may be transferred for completion of processing and underwriting to another mortgagee with DE Approval in that area. Mortgagees are obligated to continue to pay existing insurance premiums and meet all other obligations associated with insured mortgages.

A terminated mortgagee may apply for reinstatement of the DE Approval if the DE Approval for the affected area or areas has been terminated for at least six months and the mortgagee continues to be an approved mortgagee meeting the requirements of 24 CFR 202.5, 202.6, 202.7, 202.10 and 202.12. The mortgagee's application for reinstatement must be in a format prescribed by the Secretary and signed by the mortgagee. In addition, the application must be accompanied by an independent analysis of the terminated office's operations as well as its mortgage production, specifically including the FHA-insured mortgages cited in its termination notice. This independent analysis shall identify the underlying cause for the mortgagee's high default and claim rate. The analysis must be prepared by an independent Certified Public Accountant (CPA) qualified to perform audits under Government Auditing Standards as provided by the Government Accountability Office. The mortgagee must also submit a written corrective action plan to address each of the issues identified in the CPA's report, along with evidence that the plan has been implemented. The application for a new Agreement should be in the form of a letter, accompanied by the CPA's report and corrective action plan. The request should be sent to the Director, Office of Lender Activities and Program Compliance, 451 Seventh Street, SW., Room B133–P3214, Washington, DC 20410–8000 or by courier to 490 L'Enfant Plaza, East, SW., Suite 3214, Washington, DC 20024–8000.

Action: The following mortgagees have had their DE Approvals terminated by HUD:

Mortgagee name	Mortgagee branch address	HUD office jurisdictions	Termination effective date	Homeownership centers
Alacrity Lending Co	2535 E Southlake Blvd., Suite 100, Southlake, TX 76092.	Fort Worth	7/9/2010	Denver.
Cambridge Home Capital LLC	80 Cuttermill Road, Suite 408, Great Neck, NY 11021.	New York	6/24/2010	Philadelphia.
Freedom Mortgage Corp	907 Pleasant Valley Avenue, Mount Laurel, NJ 08054.	San Antonio	7/1/2010	Denver.
Pierce Commercial Bankk	1722 S Union Avenue, Tacoma, WA 98405	Seattle	7/1/2010	Santa Ana.
Universal Lending Corp	6775 E Evans Avenue, Denver, CO 80224	Houston	7/9/2010	Denver.
Universal Lending Corp	6775 E Evans Avenue, Denver, CO 80224	Kansas City	7/9/2010	Denver.

Dated: September 23, 2010.

David H. Stevens,

Assistant Secretary for Housing—Federal Housing Commissioner.

[FR Doc. 2010–24829 Filed 10–1–10; 8:45 am]

BILLING CODE 4210–67–P

DEPARTMENT OF HOUSING AND URBAN DEVELOPMENT

[Docket No. FR–5449–D–01]

Delegation and Redelegation of Authority for the Office of the Inspector General

AGENCY: Office of the Inspector General, HUD.

ACTION: Notice of delegation and redelegation of authority.

SUMMARY: This notice updates the delegation of authority of the Office of Inspector General to require by subpoena the production of all information, documents, reports, answers, records, accounts, papers, and other data in any medium (including electronically stored information, as well as any tangible thing) and documentary evidence necessary in the performance of the functions assigned by the Inspector General Act to the Deputy Inspector General, the Assistant Inspectors General, the Deputy Assistant Inspectors General, the Special Agents in Charge, the Regional Inspectors General for Audit, the Director of Inspections and Evaluations, the Directors within the Office of Audit, and the Counsel to the Inspector General. This notice also redelegates to the above-mentioned officials the authority of the Inspector General to cause the seal of the Department to be affixed to certain documents and to certify that a copy of any book, record, paper, microfilm or other document is a true copy of that in the files of the Department. This notice also delegates the authority to the Deputy Inspector General, the Assistant Inspector General for Investigation, the Deputy Assistant Inspectors General for Investigation, the Special Agents in Charge, and the Counsel to the Inspector General to request information under 5 U.S.C. section 552a(b)(7).

DATES: *Effective Date:* September 27, 2010.

FOR FURTHER INFORMATION CONTACT: Bryan Howell, Counsel to the Inspector General, Office of the Inspector General, Department of Housing and Urban Development, 451 Seventh Street, SW., Room 8260, Washington, DC 20410–4500, telephone (202) 708–1613. (These are not toll-free numbers.)

SUPPLEMENTARY INFORMATION: This notice supersedes the delegation of authority published at 72 FR 7775 (February 20, 2007).

Section 6(a)(4) of the Inspector General Act of 1978 (5 U.S.C. app.) authorizes the Inspector General to require by subpoena the production of all information, documents, reports, answers, records, accounts, papers, and other data in any medium (including electronically stored information, as well as any tangible thing) and documentary evidence necessary in the performance of the functions assigned by the Inspector General Act. This notice delegates this authority to issue subpoenas from the Inspector General to the Deputy Inspector General, the Assistant Inspectors General, the Deputy Assistant Inspectors General, the Special Agents in Charge, the Regional Inspectors General for Audit, the Director of the Inspections and Evaluations Division, the Directors within the Office of Audit, and the Counsel to the Inspector General.

This notice also redelegates to the above-mentioned officials the authority delegated to the Inspector General by the Secretary of HUD in the Delegation of Authority published on April 15, 1987, at 52 FR 12259, which delegated to various officials, including the Inspector General, the authority to cause the seal of the Department to be affixed to certain documents and to certify that a copy of any book, record, paper, microfilm or other document is a true copy of that in the files of the Department.

Section 552a(b)(7) authorizes the Inspector General to request information protected by the Privacy Act for a civil or criminal law enforcement activity. This notice delegates to the Deputy Inspector General, the Assistant Inspector General for Investigations, the Deputy Assistant Inspectors General for Investigations, the Special Agents in Charge, and the Counsel to the Inspector General the authority to request information under 5 U.S.C. section 552a(b)(7).

The Inspector General has not limited his authority to issue subpoenas or to affix the Departmental seal and certify copies of records, or to request information under 5 U.S.C. 552a by this delegation or redelegation. Also, this delegation and redelegation of authority prohibits further delegation or redelegation.

Accordingly, the Inspector General delegates and redelegates as follows:

Section A. Authority Delegated and Redelegated

The HUD Inspector General delegates to the Deputy Inspector General, the Assistant Inspectors General, the Deputy Assistant Inspectors General, the Special Agents in Charge, the Regional Inspectors General for Audit, the Director of the Inspections and Evaluations Division, the Directors within the Office of Audit, and the Counsel to the Inspector General the authority to require by subpoena the production of all information, documents, reports, answers, records, accounts, papers, and other data in any medium (including electronically stored information, as well as any tangible thing) and documentary evidence necessary in the performance of the functions assigned by the Inspector General Act pursuant to Section 6(a)(4) of the Inspector General Act of 1978.

Additionally, the Inspector General redelegates to the Deputy Inspector General, the Assistant Inspectors General, the Deputy Assistant Inspectors General, the Special Agents in Charge, the Regional Inspectors General for Audit, the Director of Inspections and Evaluations Division, the Directors within the Office of Audit, and the Counsel to the Inspector General the authority under the delegation of authority published at 52 FR 12259 (April 15, 1987) to cause the seal of the Department of Housing and Urban Development to be affixed to such documents as may require its application and to certify that a copy of any book, record, paper, microfilm or other document is a true copy of that in the files of the Department.

Additionally, the Inspector General delegates to the Deputy Inspector General, the Assistant Inspector General for Investigations, the Deputy Assistant Inspectors General for Investigations, the Special Agents in Charge, and the Counsel to the Inspector General the authority to request information under 5 U.S.C. section 552a(b)(7).

Section B. No Further Delegation or Redelegation

The authority delegated and redelegated in Section A above may not be further delegated or redelegated.

Section C. Delegation of Authority Superceded

This delegation supersedes the previous delegation of authority published in the **Federal Register** at 72 FR 7775 (February 20, 2007).

Authority: Section 6(a)(4), Inspector General Act of 1978 (5 U.S.C. App.); Section 7(d), Department of HUD Act (42 U.S.C. 3535(d)); Delegation of Authority, February 20, 2007, at 72 FR 7775; 5 U.S.C. 552a.

Dated: September 27, 2010.

Kenneth M. Donohue,

Inspector General.

[FR Doc. 2010–24748 Filed 10–1–10; 8:45 am]

BILLING CODE 4210–67–P

DEPARTMENT OF HOUSING AND URBAN DEVELOPMENT

[Docket No. FR–5415–N–09]

Notice of Availability: Notice of Funding Availability (NOFA) for HUD's Fiscal Year (FY) 2010 Housing Counseling Training Program

AGENCY: Office of the Chief of the Human Capital Officer, HUD.

ACTION: Notice.

SUMMARY: HUD announces the availability on its website of the applicant information, submission deadlines, funding criteria, and other requirements for HUD's Housing Counseling Training Program NOFA for FY2010. This year's Housing Counseling Training NOFA makes approximately $5.125 million made available under the Department of Housing and Urban Development Appropriations Act, 2009 (Pub. L. 111–8, approved March 11, 2009). The purpose of this NOFA is to improve and standardize the quality of counseling provided by housing counselors employed by "participating agencies." Participating agencies include all housing counseling and intermediary organizations participating in HUD's Housing Counseling Program, including HUD-approved agencies, affiliates and branches of HUD-approved intermediaries, HUD-approved multistate organizations, and state housing finance agencies.

The notice providing information regarding the application process, funding criteria and eligibility requirements can be found using the Department of Housing and Urban Development agency link on the Grants.gov/Find Web site at *http://www.grants.gov/search/agency.do.* A link to Grants.gov is also available on the HUD Web site at *http://www.hud.gov/offices/adm/grants/fundsavail.cfm.* The Catalogue of Federal Domestic Assistance (CFDA) number for the Housing Counseling Training NOFA is 14.316. Applications must be submitted electronically through Grants.gov.

FOR FURTHER INFORMATION CONTACT: For information concerning the Housing Counseling Training NOFA, you may contact Gerard P. Donahoe, Jr., HUD Headquarters, Single Family Housing, Program Support Division, telephone 202–402–3951 (this is not a toll-free number). Persons with speech or hearing impairments may access this telephone number via TTY by calling the toll-free Federal Relay Service during working hours at 800–877–8339.

Dated: September 29, 2010.

Barbara S. Dorf,

Director, Office of Departmental Grants Management and Oversight, Office of the Chief of the Human Capital Officer.

[FR Doc. 2010–24828 Filed 10–1–10; 8:45 am]

BILLING CODE 4210–67–P

DEPARTMENT OF HOUSING AND URBAN DEVELOPMENT

[Docket No. FR–5415–N–16]

Notice of Availability: Notice of Funding Availability (NOFA) for HUD's Fiscal Year (FY) 2010 Asthma Interventions in Public and Assisted Multifamily Housing

AGENCY: Office of the Chief of the Human Capital Officer, HUD.

ACTION: Notice.

SUMMARY: HUD announces the availability on its website of the applicant information, submission deadlines, funding criteria, and other requirements for the FY2010 Asthma Interventions in Public and Assisted Multifamily Housing Grant Program. Approximately $2.6 million is made available through this NOFA, by the Consolidated Appropriations Act, 2010 (Pub. L. 111–117, approved December 16, 2009). The purpose of this program is to fund demonstration projects to improve asthma control among children and others currently residing in federally assisted multifamily housing developments that are administered by local public housing authorities (i.e., public housing) as well as privately owned multifamily housing that is subsidized by HUD (*e.g.* project-based section 8, section 202, and section 811 housing).

The notice providing information regarding the application process, funding criteria and eligibility requirements can be found using the Department of Housing and Urban Development agency link on the Grants.gov/Find Web site at *http://www.grants.gov/search/agency.do.* A link to Grants.gov is also available on the HUD Web site at *http://www.hud.gov/offices/adm/grants/fundsavail.cfm.* The Catalogue of Federal Domestic Assistance (CFDA) number for Asthma Interventions in Public and Assisted Multifamily Housing Grant Program is 14.914. Applications must be submitted electronically through *Grants.gov.*

FOR FURTHER INFORMATION CONTACT: For information concerning the FY2010 Asthma Interventions in Public and Assisted Multifamily Housing Grant Program you may contact Dr. J. Kofi Berko, Jr., Office of Healthy Homes and Lead Hazard Control, Department of Housing and Urban Development; 451 Seventh Street, SW., Room 8236, Washington, DC 20410–3000; at 202–402–7696 (this is not a toll-free number) or via e-mail at *j.Kofi.Berko@HUD.gov.* Persons with speech or hearing impairments may access this telephone number via TTY by calling the toll-free Federal Relay Service during working hours at 800–877–8339.

Dated: September 27, 2010.

Barbara S. Dorf,

Director, Office of Departmental Grants Management and Oversight, Office of the Chief of the Human Capital Officer.

[FR Doc. 2010–24751 Filed 10–1–10; 8:45 am]

BILLING CODE 4210–67–P

DEPARTMENT OF HOUSING AND URBAN DEVELOPMENT

[Docket No. FR–5415–N–18]

Notice of Availability: Notice of Funding Availability for HUD's Fiscal Year 2010 Healthy Homes Production Program

AGENCY: Office of the Chief of the Human Capital Officer, HUD.

ACTION: Notice.

SUMMARY: HUD announces the availability on its Web site of the applicant information, submission deadlines, funding criteria, and other requirements for the FY2010 Healthy Homes Production Program. Approximately $10 million is made available through this NOFA, by the Consolidated Appropriations Act, 2010 (Pub. L. 111–117, approved December 16, 2009). The purpose of HUD's Healthy Homes Production Program is to prevent and correct significant housing-related health and safety hazards in low-income housing. This production-oriented grant program, modeled after the previously successful Healthy Homes Demonstration and Lead Hazard Control Grant Programs, will fund preventive and corrective measures to address housing-related health and safety hazards.

The notice providing information regarding the application process, funding criteria and eligibility requirements can be found using the Department of Housing and Urban Development agency link on the Grants.gov/Find Web site at *http://www.grants.gov/search/agency.do.* A link to Grants.gov is also available on the HUD Web site at *http://www.hud.gov/offices/adm/grants/fundsavail.cfm.* The Catalogue of Federal Domestic Assistance (CFDA) number for the Healthy Homes Production Program is 14.913. Applications must be submitted electronically through Grants.gov.

FOR FURTHER INFORMATION CONTACT: For information concerning the Healthy Homes Production Program, you may contact Michelle M. Miller, Director, Programs Division, Office of Healthy Homes and Lead Hazard Control, Department of Housing and Urban Development; 451 Seventh Street, SW., Room 8236, Washington, DC 20410–3000; telephone 202–402–5769 (this is not a toll-free number); facsimile 202–755–1000; *e-mail: Michelle.M.Miller@HUD.gov.* Persons with speech or hearing impairments may access this telephone number via TTY by calling the toll-free Federal Relay Service during working hours at 800–877–8339.

Dated: September 27, 2010.

Barbara S. Dorf,

Director, Office of Departmental Grants Management and Oversight, Office of the Chief of the Human Capital Officer.

[FR Doc. 2010–24752 Filed 10–1–10; 8:45 am]

BILLING CODE 4210–67–P

DEPARTMENT OF HOUSING AND URBAN DEVELOPMENT

[Docket No. FR–5415–N–13]

Notice of Availability: Notice of Funding Availability (NOFA) for HUD's Fiscal Year (FY) 2010 Lead Technical Studies and Healthy Homes Technical Studies Programs

AGENCY: Office of the Chief of the Human Capital Officer, HUD.

ACTION: Notice.

SUMMARY: HUD announces the availability on its Web site of the applicant information, submission deadlines, funding criteria, and other requirements for the FY2010 Lead Technical Studies and Healthy Homes Technical Studies Programs. Approximately $7 million is made

available through this NOFA, by the Consolidated Appropriations Act, 2010 (Pub. L. 111–117, approved December 16, 2009). Of this amount, approximately $1 million is for Lead Technical Studies and approximately $6 million is for Healthy Homes Technical Studies. The overall goal of both the Lead and the Healthy Homes Technical Studies programs is to gain knowledge to improve the efficacy and cost-effectiveness of methods for evaluation and control of lead-based paint and other housing related health and safety hazards.

The notice providing information regarding the application process, funding criteria and eligibility requirements can be found using the Department of Housing and Urban Development agency link on the Grants.gov/Find Web site at *http://www.grants.gov/search/agency.do*. A link to Grants.gov is also available on the HUD Web site at *http://www.hud.gov/offices/adm/grants/fundsavail.cfm*. The Catalogue of Federal Domestic Assistance (CFDA) number for the Lead Technical Studies Grant Program is 14.902. The CFDA number for the Healthy Homes Technical Studies Grant Program is 14.906. Applications must be submitted electronically through *Grants.gov*.

FOR FURTHER INFORMATION CONTACT: For information concerning the Lead Technical Studies and Healthy Homes Technical Studies Programs, you may contact Dr. Peter Ashley, Office of Healthy Homes and Lead Hazard Control, Department of Housing and Urban Development; 451 Seventh Street, SW., Room 8236, Washington, DC 20410–3000; at 202–402–7595 or via e-mail at *Peter.J.Ashley@hud.gov*. Persons with speech or hearing impairments may access this telephone number via TTY by calling the toll-free Federal Relay Service during working hours at 800–877–8339.

Dated: September 27, 2010.

Barbara S. Dorf,

Director, Office of Departmental Grants Management and Oversight, Office of the Chief of the Human Capital Officer.

[FR Doc. 2010–24750 Filed 10–1–10; 8:45 am]

BILLING CODE 4210–67–P

DEPARTMENT OF HOUSING AND URBAN DEVELOPMENT

[FR–5386–N–10]

Privacy Act; Notification of a New Privacy Act System of Records, Homeless Families Impact Study Data Files

AGENCY: Office of the Chief Information Officer HUD.

ACTION: Notification of a New Privacy Act System of Records (SORN).

SUMMARY: HUD proposes to establish a new Privacy Act of 1974 (5 U.S.C. 552a), SORN. The proposed new SORN is the Homeless Families Impact Study Data Files (HFISDF). The records system will be used by HUD's Office of Policy Development and Research to study the effects of housing and services interventions for homeless families. Refer to the "Objective" caption to obtain detailed information about the purpose of this study.

DATES: *Comments Due Date:* November 3, 2010.

ADDRESSES: Interested persons are invited to submit comments regarding this notice to the Rules Docket Clerk, Office of General Counsel, Department of Housing and Urban Development, 451 Seventh Street, SW., Room 10276, Washington, DC 20410–0500. Communications should refer to the above docket number and title. A copy of each communication submitted will be available for public inspection and copying between 8:00 a.m. and 5:00 p.m. weekdays at the above address.

FOR FURTHER INFORMATION CONTACT: Donna Robinson-Staton, Departmental Privacy Act Officer, 451 Seventh Street, SW., Room 2256, Washington, DC 20410, Telephone Number (202) 402–8047. (This is not a toll-free number.) A telecommunication device for hearing- and speech-impaired individuals (TTY) is available at (800) 877–8339 (Federal Information Relay Service).

SUPPLEMENTARY INFORMATION: Pursuant to the Privacy Act of 1974 (5 U.S.C. 552a), as amended notice is given that HUD proposes to establish a new SORN as identified as Housing Families Impact Study Data Files.

Title 5 U.S.C. 552a(e)(4) and (11) provide that the public be afforded a 30-day period in which to comment on the new system of records.

The new system report was submitted to the Office of Management and Budget (OMB), the Senate Committee on Governmental Affairs, and the House Committee on Government Reform pursuant to paragraph 4c of Appendix 1 to OMB Circular No. A–130, "Federal Responsibilities for Maintaining Records About Individuals," July 25, 1994 (59 FR 37914).

Authority: 5 U.S.C. 552a 88 Stat. 1896; 42 U.S.C. 3535(d).

Dated: September 15, 2010.

Jerry E. Williams,

Chief Information Officer.

HUD/PD&R–10

SYSTEM NAME:

Homeless Families Impact Study Data Files

SYSTEM LOCATION:

Homeless Families Impact Study Data Files are to be located at Abt Associates Inc., 55 Wheeler Street, Cambridge, MA; Abt Associates Inc., 4550 Montgomery Avenue, Bethesda, MD; and the AT&T Datacenter, 15 Enterprise Ave., Secaucus, NJ 07094.

CATEGORIES OF INDIVIDUALS COVERED BY THE SYSTEM:

Families enrolled in Homeless Families Impact Study.

CATEGORIES OF RECORDS IN THE SYSTEM:

Name; Social Security Number; study identifier; birth date; contact information (home address, telephone numbers, e-mail address); demographic characteristics of the family head (*e.g.,* race/ethnicity, gender, marital status); number of children and other adults in the household (a roster of adults and children with the family head at baseline and spouse/partner and children not with the family head at baseline, and characteristics of these family members); income sources and total family income; employment and earnings for the family head; health (behavioral health and physical health of the family head); substance use; foster care history for the family head; exposure to domestic violence; housing status prior to shelter entry; homelessness history; barriers to housing; homeless program participation; contact information for family and friends; and assigned study intervention, and study involvement information.

AUTHORITY FOR MAINTENANCE OF THE SYSTEM:

Sec. 501, 502, Housing and Urban Development Act of 1970 (Pub. L. 91–609), 12 U.S.C. 1701z–1, 1701z–2.

PURPOSE:

The U.S. Department of Housing and Urban Development (HUD) is undertaking an evaluation of the Impacts of Housing and Services Interventions for Homeless Families to provide research evidence to help federal policymakers, community

planners, and local practitioners make sound decisions about the best ways to address homelessness among families. This study will compare four combinations of housing and service interventions for homeless families in a rigorous, multi-site experiment, to determine what interventions work best to promote family stability and well-being and, within the limits of statistical power, what sorts of families benefit most from each intervention. The interventions are: (1) Permanent housing subsidy without services (Subsidy Only); (2) Community-Based Rapid Re-housing (CBRR), consisting of temporary housing subsidy provided in conventional housing with limited supportive services; (3) temporary housing subsidy provided in facility-based housing with intensive services but no guarantee of a permanent subsidy (Project-Based Transitional Housing-PBTH); and (4) shelter, with whatever services the shelter ordinarily provides to its residents and any other assistance available in the community (Usual Care). This study will also exploit naturally occurring variation in program features within these categories and across sites to explore, non-experimentally, what features of programs seem most responsible for success.

ROUTINE USES OF RECORDS MAINTAINED IN THE SYSTEM, INCLUDING CATEGORIES OF USERS AND THE PURPOSES OF SUCH USES:

■ Authorized AbtSRBI researchers will collect the data from participating families and will match these primary study data with other datasets for tracking (*e.g.,* matching with change of address databases) to track and locate families throughout the study and to manage the data collection process.

■ A limited number of authorized Abt researchers will access personally identifying information to link data from one phase of data collection to another or to match primary study data with other datasets for data collection purposes (*e.g.,* matching with HUD's public housing dataset to measure housing receipt).

■ Authorized Abt researchers will also use the data for statistical analysis and to develop findings for this research study.

■ Authorized Abt researchers may use the data to create a public use file of non-identifiable data for disclosure to authorized researchers for other purposes. The Department suspects or has confirmed that the security or confidentiality of information in the system of records has been compromised; the Department has determined that as a result of the suspected or confirmed compromise there is a risk of harm to economic or property interests, identity theft or fraud, or harm to the security or integrity of this system or other systems or programs (whether maintained by the HUD or another agency or entity) that rely upon the compromised information.

■ If the Department suspects or has confirmed that the security or confidentiality of information in the system of records has been compromised; or if the Department has determined that as a result of the suspected or confirmed compromise there is a risk of harm to economic or property interests, identity theft or fraud, or harm to the security or integrity of this system or other systems or programs (whether maintained by the HUD or another agency or entity) that rely upon the compromised information; than the disclosure made to such agencies, entities, and persons is reasonably necessary to assist in connection with the HUD's efforts to respond to the suspected or confirmed compromise and prevent, minimize, or remedy such harm.

Each data user's permissions will be defined based on the user's role on the project. For example, the local site interviewer will be able to review data for study participants only for his or her own specific site.Study data will be aggregated or de-identified at the highest level possible for each required, authorized use.

Abt Associates will not use or disclose the data for any purposes other than for the "The Impacts of Housing and Services Interventions for Homeless Families" study ("Homeless Families Study") or related follow-up studies. Abt Associates will not disclose the data to additional parties without the written authority of the providing organization, except where required by law.

POLICIES AND PRACTICES FOR STORING, RETRIEVING, ACCESSING, RETAINING, AND DISPOSING OF RECORDS IN THE SYSTEM:

SAFEGUARDS:

The following safeguards shall be used to secure data in storage, retrieval, during access, and disposal.

■ All personal data (identifiable and de-identified data analyses files) will be encrypted and maintained on a secure workstation or server that is protected by a firewall, complex passwords, and multi-authentication factors, in a directory that can only be accessed by the network administrators and the analysts actively working on the data.

■ Data on the secure server will be encrypted using an industry standard algorithm incorporating at least 128-bit encryption. The decryption key will only be known to analysts actively working with the data.

■ Separate data files will be maintained for each questionnaire and for identifying information. Data files used for analysis will be stored in a separate location from files with identifying information to minimize the risk that an unauthorized user could use the unique identification number to link de-identified files with the identifiers. The unique identification number will be protected through multi-mode authentication, in addition to encryption technologies.

■ Access rights to the data are granted to limited researchers on a need-to-know basis, and the level of access provided to each researcher is based on the minimal level required that individual to fulfill his research role.

■ Abt Associates will backup the data on a regular basis to safeguard against system failures or disasters. Only encrypted versions of the data will be copied to the backup media. Unencrypted data will never be stored on a laptop or on a movable media such as CDs, diskettes, or USB flash drives.

■ If an authorized researcher leaves employment or is no longer working on this project, their user ID and access will be terminated within one day, as will VPN access. These steps will be documented as part of termination process.

■ The site interviewers will securely store any hard copy documents with personal protected information, such as signed consent forms, tracking letters, or interview appointment schedules.

Consent Forms. After the family signs the informed consent form, the site interviewers will seal the form in an envelope at the conclusion of the interview. Envelopes will be stored in a box in the trunk of the interviewer's car until the interviewer returns home. Once home, the interviewers will complete all necessary paperwork and will submit the completed surveys to the Abt Project Director via FedEx signature required.

Tracking documentation. Each site interviewer must store any tracking letters, appointment schedules, or other documentation with personal protected information, such as name, in a locked cabinet that can only be accessed by the interviewer. Tracking documentation with personal protected information should not be generated until needed in the tracking process to limit risk of unauthorized disclosures. Site interviewers should use study IDs in lieu of personal protected information on tracking documentation whenever

feasible to limit risk of unauthorized disclosures.

All hard copy forms with personal identifying data (the participant agreement/informed consent form) will be stored securely in a locked cabinet that can only be accessed by authorized individuals working on the data. The locked cabinet will be stored in a locked office in a limited-access building.

Hard copy forms that are no longer needed for the study will be shredded. If site interviewers do not have access to a paper shredder, they will submit the paperwork to the Abt Project Director via FedEx with clear instructions to destroy the documents upon receipt.

RETRIEVING:

The random assignment datafile within this system will include personal identifiers that can be used to locate records to update families' whereabouts or to verify if a family has already been enrolled in the study. Records within the random assignment datafile can be retrieved by name, social security number, study identification number, birthdate, or spouse name.

After data collection is complete, researchers will use a dataset that is stripped of identifying information for all analyses, with the exception of a unique study identification number assigned to each participating family. The study identification number will be randomly generated at the time of random assignment and will be unrelated to personal information such as SSN, DOB, or name. The study identifier can be linked to the personal identifying information but only by a small number of central research staff at Abt Associates.

RETENTION AND DISPOSAL:

PII will be maintained only as long as required and only under conditions specified in the study protocol. Upon completion of all research for the Homeless Families study, Abt Associates will permanently destroy of all electronic personally-identifiable information on the working server using one of the methods described by the NIST SP 800–88.

"Guidelines for Media Sanitization" (September 2006). Encrypted versions of the data may remain on backup media for a longer period of time, but will be similarly permanently destroyed.

At the end of the contract, records that do not need to be retained will be shredded and the remainder of the files will be shredded after the three-year retention period required in the contract. The retention and disposal procedures are in keeping with HUD's records management policies as described in HUD Records Disposition Schedules (2225.6) Appendix 67.

SYSTEM MANAGER(S) AND ADDRESS:

Carol Star, Director of the Program Evaluation Division, Office of Policy Development and Research, Department of Housing and Urban Development, 451 Seventh Street, SW., Washington, DC 20410, Telephone Number (202) 402–6139.

NOTIFICATION PROCEDURE:

For information, assistance, or inquiry about existence or records, contact Donna Robinson-Stanton, Departmental Privacy Act Officer, Department of Housing and Urban Development, 451 Seventh Street, SW., Washington, DC, in accordance with the procedures in 24 CFR part 16.

RECORD ACCESS PROCEDURES:

The Department's rules for providing access to records to the individual concerned appear in 24 CFR part 16. If additional information or assistance is required, contact the Privacy Act Officer at the appropriate location.

CONTESTING RECORD PROCEDURES:

The Department's rules for contesting the contents of records and appealing initial denials, by the individual concerned, appear in 24 CFR part 16. If additional information or assistance is needed, it may be obtained by contacting:

(i) In relation to contesting contents of records, the Departmental Privacy Act, Department of Housing and Urban Development, 451 Seventh Street, SW., Room 2256, Washington, DC 20410.

(ii) In relation to appeals of initial denials, the HUD Departmental Privacy Appeals Officers, Office of General Counsel, Department of Housing and Urban Development, 451 Seventh Street, SW., Washington, DC 20410.

RECORD SOURCE CATEGORIES:

Original data collected directly from participating families, third party data for tracking purposes (*e.g.* National Change of Address database, credit bureaus), and administrative data on HUD's public housing programs.

EXEMPTION FROM CERTAIN OF PROVISION OF THE ACT:

None.

[FR Doc. 2010–24746 Filed 10–1–10; 8:45 am]

BILLING CODE 4210–67–P

DEPARTMENT OF THE INTERIOR

Fish and Wildlife Service

[FWS–R5–R–2010–N164; BAC–4311–K9–S3]

Iroquois National Wildlife Refuge, Genesee County and Orleans County, NY

AGENCY: Fish and Wildlife Service, Interior.

ACTION: Notice of availability of draft comprehensive conservation plan and environmental assessment; request for comments.

SUMMARY: We, the U.S. Fish and Wildlife Service (Service), announce the availability of the draft comprehensive conservation plan (CCP) and environmental assessment (EA) for Iroquois National Wildlife Refuge (NWR) for a 30-day public review and comment period. In this draft CCP/EA, we describe three alternatives, including our Service-preferred Alternative B, for managing this refuge for the next 15 years. Also available for public review and comment is the draft compatibility determinations, which is included as Appendix A in the draft CCP/EA.

DATES: To ensure our consideration of your written comments, we must receive them by November 3, 2010. We will also hold an open house and public meeting at the refuge in the town of Alabama, New York, during the 30-day review period to receive comments and provide information on the draft plan. We will announce and post details about the public meeting in local news media, via our project mailing list, and on our Regional planning Web site, *http://www.fws.gov/northeast/planning/Iroquois/ccphome.html.*

ADDRESSES: Send your comments, requests for more information, or requests for copies of the draft CCP/EA by any of the following methods.

U.S. Mail: Thomas Bonetti, Natural Resource Planner, U.S. Fish and Wildlife Service, 300 Westgate Center Drive, Hadley, MA 01035.

Facsimile: Attention: Thomas Bonetti, 413–253–8468.

Electronic mail: northeastplanning@fws.gov. Include "Iroquois NWR CCP" in the subject line of your message.

Agency Web site: View or download the draft document at *http://www.fws.gov/northeast/iroquois/.*

In-Person Drop Off: You may drop off comments during regular business hours at Iroquois NWR, 1101 Casey Road, Basom, NY 14013.

FOR FURTHER INFORMATION CONTACT: Thomas Roster, Project Leader, Iroquois

NWR, 1101 Casey Road, Basom, NY 14013; phone: 585–948–5445; facsimile: 585–948–9538; electronic mail: *northeastplanning@fws.gov.*

SUPPLEMENTARY INFORMATION:

Introduction

With this notice, we continue the CCP process for Iroquois NWR, which we started by publishing a notice in the **Federal Register** (73 FR 10279; February 26, 2008). We prepared the draft CCP in compliance with the National Environmental Policy Act of 1969 (42 U.S.C. 4321–4347, as amended) (NEPA) and the National Wildlife Refuge System Administration Act of 1966, as amended by the National Wildlife Refuge System Improvement Act of 1997 (16 U.S.C. 668dd–668ee) (Improvement Act).

Iroquois NWR was established in 1958 under the Migratory Bird Conservation Act for "* * * use as an inviolate sanctuary, or for any other management purpose, for migratory birds." (16 U.S.C. 715d). The refuge consists of more than 10,800 acres within the rural townships of Alabama and Shelby, New York, midway between Buffalo and Rochester. Freshwater marshes and hardwood swamps are bounded by forests, grasslands, and wet meadows. These areas serve the habitat needs of both migratory and resident wildlife, including waterfowl, songbirds, mammals, and amphibians, as well as numerous indigenous plant species.

Background

The CCP Process:

The Improvement Act requires us to develop a CCP for each national wildlife refuge. The purpose for developing CCPs is to provide refuge managers with 15-year plans for achieving refuge purposes and the mission of the National Wildlife Refuge System (NWRS), in conformance with sound principles of fish and wildlife management, conservation, legal mandates, and our policies. In addition to outlining broad management direction on conserving wildlife and their habitats, CCPs identify wildlife-dependent recreational opportunities available to the public, including opportunities for hunting, fishing, wildlife observation and photography, and environmental education and interpretation. We will review and update each CCP at least every 15 years, in accordance with the Improvement Act.

Public Outreach

In conjunction with our **Federal Register** notice announcing our intent to begin the CCP process, open houses and public information meetings were held in Western New York at three different locations during April 2008. Meetings were advertised locally through news releases, Web sites, and our mailing list. Participants were encouraged to actively express their opinions and suggestions. The public meetings allowed us to gather information and ideas from local residents, adjacent landowners, and various organizations and agencies.

Throughout the process, we have conducted additional outreach via newsletters and participation in meetings, and continued to request public input on refuge management and programs. We considered and evaluated all comments, and incorporated many of them into the varied alternatives in the draft CCP/EA.

CCP Actions We Are Considering, Including the Service-Preferred Alternative

We developed three management alternatives based on the purposes for establishing the refuge, its vision and goals, and the issues and concerns the public, State agencies, and the Service identified during the planning process. The alternatives have some actions in common, such as protecting cultural resources, developing step-down management plans, and controlling invasive plant species. Other actions distinguish the alternatives. The draft CCP/EA describes the alternatives in detail, and relates them to the issues and concerns we identified during the planning process. The following are highlights of each of the alternatives.

Alternative A (Current Management)

This alternative is the "No Action" alternative, as required by NEPA. Alternative A defines our current management activities, and serves as the baseline against which to compare the other alternatives. A selection of this alternative would maintain the status quo in managing the refuge for the next 15 years. No major changes would be made to current management practices. This alternative provides a basis for comparing the other two alternatives.

Current management of refuge impoundments would continue, resulting in no change in the amount of open water and emergent marsh habitat available to refuge wildlife. Forested habitat on the refuge would increase as the refuge allows natural succession of some early successional grassland and shrubland habitats. We would continue to eliminate small, isolated grasslands that do not provide significant habitat, leading to a 138-acre decrease in grassland habitat as compared to current levels. Refuge shrublands would continue to be cut at a rate of 10–20 acres annually, resulting in a decrease of 445 acres of shrubland habitat as compared to current levels. We would maintain existing opportunities for visitors to engage in wildlife observation and photography, environmental education, interpretation, hunting, and fishing on the refuge. We would also maintain existing infrastructure and buildings, and current staffing levels.

Alternative B (Service-Preferred Alternative)

This alternative is the one we propose as the best way to manage this refuge over the next 15 years. It includes the array of management actions that, in our professional judgment, works best toward achieving the refuge purposes, our vision and goals, and the goals of other State and regional conservation plans. We also believe it most effectively addresses the key issues raised during the planning process.

Under Alternative B, refuge habitat management would focus on decreasing habitat fragmentation and restoring native habitats. Similar to Alternative A, management of refuge impoundments would not change, with no change in the amount of open water and emergent marsh habitat available. The amount of early successional habitat, including grasslands and shrublands, would slightly increase as the refuge removes remaining hedgerows and improves connectivity between these habitats. The refuge would also convert 202 acres of non-native conifer plantations, replacing most of these plantations with native tree species. Some plantations, located in shrubland management areas, would be converted to native shrub species.

Similar to many other national wildlife refuges, we propose to limit public access to designated areas of the refuge year-round. Wildlife observation and photography, hiking, and walking would be permitted on established refuge nature trails. Off-trail access would be limited to permitted hunters participating in refuge hunting programs. Limiting off-trail access would reduce human disturbance to foraging and resting waterfowl and other migratory birds using refuge impoundments.

Under this alternative, we would renovate and expand the existing refuge headquarters building as a new visitor contact station and administration building. We also propose to co-locate

the Lower Great Lakes Fish and Wildlife Conservation Office, currently located in Amherst, New York, in this new building. The 10,609 square-foot building would house a sales outlet for the Friends of Iroquois National Wildlife Refuge, an exhibit hall, multi-purpose room, conference room, and office space to accommodate Service Refuge and Fisheries programs staff and New York State Department of Environmental Conservation staff.

We would also continue our biological monitoring and inventory program, but regularly evaluate the results to help us better understand the implications of our management actions and identify ways to improve their effectiveness.

Alternative C (Natural Systems)

Refuge management under Alternative C would focus on restoration of natural ecosystem processes and functions. Habitat management would target a more natural state and emphasize restoration of native habitats. Refuge impoundments would no longer be actively managed, resulting in a 329-acre decrease in open water and emergent marsh habitat. Only the two largest grassland units would be managed, leading to a 50 percent reduction in the amount of grassland habitat. We would also discontinue active management of shrubland habitat, with only some native shrub swamp habitat remaining. Under this alternative, forest cover would increase by 1,548 acres through the natural succession of refuge grasslands, shrublands, open water, and emergent marsh habitat. Similar to Alternative B, non-native conifer plantations would be replaced with native tree species.

We propose to limit public access to designated areas of the refuge year-round, allowing wildlife observation, hiking, and walking on established refuge nature trails. Also, we propose to co-locate the Lower Great Lakes Fish and Wildlife Conservation Office currently located in Amherst, New York, with a new visitor contact station and administration building at Iroquois NWR.

Public Meetings

We will give the public opportunities to provide input at an open house and public meeting at the refuge headquarters in Alabama, New York. You can obtain the schedule from the project leader or natural resource planner (*see* **ADDRESSES** or **FOR FURTHER INFORMATION CONTACT** above). You may also submit comments at any time during the planning process by any means shown in the **ADDRESSES** section.

Public Availability of Comments

Before including your address, phone number, e-mail address, or other personal identifying information in your comments, you should be aware that your entire comment—including your personal identifying information—may be made publicly available at any time. While you can ask us in your comment to withhold your personal identifying information from public review, we cannot guarantee that we will be able to do so.

Dated: September 9, 2010.

James G. Geiger,

Acting Regional Director, U.S. Fish and Wildlife Service, Hadley, MA 01035.

[FR Doc. 2010–24836 Filed 10–1–10; 8:45 am]

BILLING CODE 4310–55–P

DEPARTMENT OF THE INTERIOR

National Park Service

Jackson Hole Airport Agreement Extension, Final Environmental Impact Statement, Grand Teton National Park, Wyoming

AGENCY: National Park Service, Department of the Interior.

ACTION: Notice of Availability of the Final Environmental Impact Statement for the Jackson Hole Airport Agreement Extension, Grand Teton National Park.

SUMMARY: Pursuant to the National Environmental Policy Act of 1969, 42 U.S.C. 4332(2)(C), the National Park Service announces the availability of a Final Environmental Impact Statement for the Jackson Hole Airport Agreement Extension, Grand Teton National Park, Wyoming. This effort addresses a request from the Jackson Hole Airport Board to amend the agreement between the Department of the Interior and the Airport Board in order to ensure that the airport remains eligible for funding through the Federal Aviation Administration (FAA). The proposal would allow the agreement to be amended to provide two additional 10-year options that could be exercised by the Board, the first in 2013 and the second in 2023. By exercising these options, the Board would ensure that the airport remains eligible for Airport Improvement Program grants from the FAA, upon which commercial airports are dependent. These grants provide funds for projects such as maintenance of the runway and taxiways, purchase of capital equipment such as snowplows and fire engines, and other projects necessary for the airport to retain its certification as a commercial airport. Without such funds, the airport would at some point be unable to retain its certification and all commercial air service would be terminated.

Alternatives considered in the EIS include *Alternative 1: No Action*—The airport would continue operations under the existing Agreement which currently has an expiration date of April 27, 2033; and *Alternative 2: Extend Agreement*—This alternative would amend the text of the 1983 Agreement to provide the Jackson Hole Airport Board with options for two additional 10-year terms. The proposed amendment would also add language to the Agreement strengthening the requirements of the Airport Board to work in good faith to further reduce and mitigate the impacts of the airport on the park to the lowest practicable level, consistent with the safe and efficient operation of the airport and within applicable laws and regulations. In addition, the Agreement would require the Airport Board to prepare a biennial report of its operations and accomplishments, including efforts to mitigate its impacts, and to periodically review the terms of the Agreement with the NPS at least every five years. Alternative 2 is the Preferred Alternative.

DATES: The National Park Service will execute a Record of Decision (ROD) no sooner than 30 days following publication by the Environmental Protection Agency of the Notice of Availability of the Final Environmental Impact Statement.

ADDRESSES: Information will be available for public inspection online at *http://parkplanning.nps.gov/GRTE,* in the office of the Superintendent, Mary Gibson Scott, Grand Teton National Park, P.O. Drawer 170, Moose, Wyoming.

FOR FURTHER INFORMATION CONTACT: Gary Pollock, Grand Teton National Park, P.O. Drawer 170, Moose, Wyoming, 307–739–3410, *gary_pollock@nps.gov.*

Dated: September 17, 2010.

John Wessels,

Regional Director, Intermountain Region, National Park Service.

[FR Doc. 2010–24789 Filed 10–1–10; 8:45 am]

BILLING CODE P

DEPARTMENT OF THE INTERIOR

National Park Service

Warner Valley Comprehensive Site Plan, Final Environmental Impact Statement, Lassen Volcanic National Park, Plumas County, CA; Notice of Availability

Summary: Pursuant to § 102(2)(C) of the National Environmental Policy Act of 1969 (Pub. L. 81–190 as amended), the National Park Service (NPS), Department of the Interior, has prepared a Final Environmental Impact Statement (Final EIS) for the Warner Valley Comprehensive Site Plan. This conservation planning effort has four main objectives: (1) Improving visitor experience and enhancing public safety through improvements to infrastructure and relocating infrastructure so it is less visible; (2) Ecological restoration of Warner Valley fen and wetland areas; (3) Removal or repair of Dream Lake Dam and restoration of associated riparian/wetland complex; (4) Protect and enhance the Drakesbad Historic District through removal of non-contributing structures and functions. The Final EIS evaluates alternative methods for accomplishing ecological restoration and cultural resource protection; appropriate mitigation measures are incorporated, and an "environmentally preferred" course of action is identified.

Background: Warner Valley is located in the south central part of the Lassen Volcanic National Park, and encompasses the 400-acre project planning area. This area includes Dream Lake Dam, built in 1932 by Alex Sifford, which impounds an approximately 2.7-acre lake. The center of the valley features a large meadow that contains one of the largest known fens in the Sierra Nevada and Cascade mountains. The upper valley area was originally developed for cattle ranching in the late 1800s by E.R. Drake, who initiated efforts to ditch and dry out the wet meadow to improve the grazing for cattle. In 1900, Mr. Drake sold his Warner Valley property to the Sifford family who focused on developing a summer guest ranch for the next 50 years. The Siffords built the 10 structures which now form the core of Drakesbad Guest Ranch Historic District (both Dream Lake and the meadow are contributing features). They transformed overnight accommodations from tent camping near hot springs into a guest ranch. The Siffords also built or improved trails, created a hot spring-fed pool, constructed corrals, further dewatered the meadow, and constructed the impoundment to create the lake for their guests.

In 1958 the facilities and land were sold to the NPS. The Guest Ranch continues today as a concession operated by California Guest Services. The current Drakesbad wetland conditions include a fen which is drying out and ceasing to function as a fen, and Dream Lake, which has submerged a natural wetland. The Historic District has accumulated many features and structures which diminish its historic character. Lack of clearly demarcated parking affects natural resources by allowing car traffic to encroach in sensitive areas. Hikers traveling the Pacific Crest Trail must walk on the unimproved Warner Valley Road, which also passes through the nearby campground.

Range of Alternatives: The Final EIS describes and analyzes a "no action" alternative (*Alternative 1*) which would continue current management practices, and two "action" alternatives. *Alternatives 2 and 3* contain a varying mix of three major components: (1) Enhancing visitor experience and safety through improving or relocating non-essential infrastructure so it has less impact on park visitor experience and historic district qualities; (2) ecological restoration of wetlands including Drakesbad fen, the larger Warner Valley fen wetland, and Dream Lake submerged riparian/wetland complex; (3) protecting and enhancing the Historic District by removing non-contributing structures and functions.

Both "action" alternatives include the following common elements:

- Move concession employee housing, storage, generator, and propane tanks out of the Historic District and into a new service area.
- Create a Pacific Crest Trail connection so hikers may avoid walking along Warner Valley road.
- Renovate and slightly expand the non-historic bathhouse adjacent to the swimming pool.
- Reduce parking sprawl by replacing inadequate wheel stops.
- Make minor changes to the campground and fee station location, including relocation of the day use/trailhead parking from a meadow to the campground.

Alternative 2 (agency preferred) components include: (a) Ecological restoration of Warner Valley fen through permanently filling ditches with appropriate soil and native material; (b) creation of a concession housing and service center outside of the Historic District composed of tent cabins surrounding a single-story bathroom building; (c) removal of Dream Lake Dam and allowing the area to revert to a riparian/wetland complex. In addition, a change to *Alternative 2* (as was presented in the Draft EIS) has been incorporated, in response to public comment and further staff analysis, which is as follows: relocate, rather than eliminate, the volleyball court to a location adjacent to the pool. This change is intended to protect historic viewsheds yet maintain a range of recreational activities for Guest Ranch visitors. This alternative has also been deemed to be "environmentally preferred".

Alternative 3 includes: (a) Restoration of Warner Valley fen through selective damming of ditches; (b) creation of a concession housing and service center outside the Drakesbad Historic District composed of a two-story dormitory building with bathrooms; (c) reconstruction of Dream Lake Dam to Bureau of Reclamation engineering standards. There are no changes to this alternative.

Public Involvement and Agency Coordination: The original public scoping effort focused on a proposed Dream Lake Dam Management Plan. Preliminary meetings were held during November 4–7, 2002, in Chico, Red Bluff, Redding, and Chester. Meeting announcements were printed in the Red Bluff Daily News, Chester Progressive, Redding Record Searchlight, and the Sacramento Bee (twenty additional media outlets, including newspaper, radio stations, and television stations were also notified). Formal public scoping for this Management Plan was announced in the **Federal Register** on April 4, 2003. This initial conservation planning effort was expanded into the broader Warner Valley Comprehensive Site Plan as it became apparent that separate planning projects would be more time consuming to accomplish. Preliminary scoping for the Warner Valley Comprehensive Site Plan was initiated on June 1, 2004, with solicitations at the Drakesbad Guest Ranch Lodge for comments about potential future management options for the upper valley area. Public meetings for the Comprehensive Site Plan were held during June 13–15, 2005, in Red Bluff, Chester, and Vacaville. The same media outlets mentioned above were notified, and approximately 700 public scoping announcements were distributed. Formal scoping was initiated on June 24, 2005, with publication in the **Federal Register** of the Notice of Intent to prepare an EIS. These outreach activities elicited information from individuals, agencies, and organizations, which aided the alternatives formulation and

environmental impact analysis processes; all comments obtained throughout the extended scoping effort are available in the administrative record.

On August 21, 2009, the Warner Valley Comprehensive Site Plan/Draft Environmental Impact Statement (Draft EIS) was released for a 90-day public review period, closing on November 21, 2009. Three public open houses were hosted; on September 2 in Chester, September 3 in Anderson, and September 8 in Vacaville. Copies of the Draft EIS were available for review at local libraries and the open houses, and an electronic version was posted at both Lassen Volcanic National Park's Web site *http://www.nps.gov/lavo/parkmgmt/index.htm* and the NPS Planning, Environment and Public Comment Web site *http://parkplanning.nps.gov.* A total of 33 comment letters were received, including from Greenville Rancheria, the Environmental Protection Agency, the Federal Emergency Management Agency, the California Regional Water Quality Control Board, the Northern Sierra Air Quality District, the Almanor Basin Fire Safe Council, and assorted letters from groups and individuals. Topics mentioned most frequently included: Restoration of Drakesbad Meadow; removal of Dream Lake Dam; alternative energy use; changes to campgrounds and redesign of trails and pathways; proposed new concessioner employee housing; and relocation of the volleyball court. Personal letters conveyed opinions both in favor and against actions proposed—some of these comments arose out of interest in preserving Drakesbad Guest Ranch in its present condition without any significant changes. Agencies provided information regarding regulatory requirements and permitting. Comments and responses are detailed in Chapter 6 of the Final EIS.

Supplementary Information: The Final EIS will be distributed in the same manner as the Draft EIS. In addition to this announcement, availability of the document will be publicized through local and regional press media. The document will be available at park headquarters and at local public libraries, and an electronic version will also be posted on the Lassen Volcanic National Park and NPS Web sites (*see above*). New requests for the document can be made at (530) 595–4444 extension 5101 or *lavo_planning@nps.gov.* Not sooner than thirty days after the **Federal Register** notice by the Environmental Protection Agency of availability of the Final EIS, a Record of Decision may be prepared. As a delegated EIS, the official responsible for approval of the Comprehensive Site Plan is the Regional Director, Pacific West Region. The official subsequently responsible for implementation will be the Superintendent, Lassen Volcanic National Park.

Dated: March 19, 2010.

Patricia L. Neubacher,

Acting Regional Director, Pacific West Region.

[FR Doc. 2010–24790 Filed 10–1–10; 8:45 am]

BILLING CODE 4312–GD–P

DEPARTMENT OF THE INTERIOR

Fish and Wildlife Service

[FWS–R9–FHC–2010–N211; 94140–1341–0000–N5]

Aquatic Nuisance Species Task Force Meeting

AGENCY: Fish and Wildlife Service, Interior.

ACTION: Notice of meeting.

SUMMARY: This notice announces a meeting of the Aquatic Nuisance Species (ANS) Task Force. The meeting is open to the public. The meeting topics are identified in the **SUPPLEMENTARY INFORMATION** section.

DATES: The ANS Task Force will meet from 8 a.m. to 5 p.m. on Wednesday, November 3 through Thursday, November 4, 2010.

ADDRESSES: The ANS Task Force meeting will take place at the Holiday Inn—Arlington at Ballston, 4610 N. Fairfax Drive, Arlington, VA 22203 (703–243–9800). You may inspect minutes of the meeting at the office of the Chief, Division of Fisheries and Aquatic Resource Conservation, U.S. Fish and Wildlife Service, 4401 North Fairfax Drive, Arlington, VA 22203, during regular business hours, Monday through Friday. You may also view the minutes on the ANS Task Force Web site at: *http://anstaskforce.gov/meetings.php.*

FOR FURTHER INFORMATION CONTACT: Susan Mangin, Executive Secretary, ANS Task Force, by phone at (703) 358–2466, or by e-mail at *Susan_Mangin@fws.gov.*

SUPPLEMENTARY INFORMATION: Under section 10(a)(2) of the Federal Advisory Committee Act (5 U.S.C. App.), this notice announces meetings of the ANS Task Force. The ANS Task Force was established by the Nonindigenous Aquatic Nuisance Prevention and Control Act of 1990 (Pub. L. 106–580, as amended).

Topics that the ANS Task Force plans to cover during the meeting include: Regional Panel issues and recommendations, updates on ANSTF-approved species management and control plans, vector management, and consideration for approval of State ANS management plans. The agenda and other related meeting information are on the ANS Task Force Web site at: *http://anstaskforce.gov/meetings.php.*

Dated: September 24, 2010.

Bryan Arroyo,

Co-Chair, Aquatic Nuisance Species Task Force, Assistant Director—Fisheries & Habitat Conservation.

[FR Doc. 2010–24807 Filed 10–1–10; 8:45 am]

BILLING CODE 4310–55–P

INTERNATIONAL TRADE COMMISSION

[Investigation No. 731–TA–1088 (Final)]

Polyvinyl Alcohol From Taiwan

AGENCY: United States International Trade Commission.

ACTION: Scheduling of the final phase of an antidumping investigation.

SUMMARY: The Commission hereby gives notice of the scheduling of the final phase of antidumping investigation No. 731–TA–1088 (Final) under section 735(b) of the Tariff Act of 1930 (19 U.S.C. 1673d(b)) (the Act) to determine whether an industry in the United States is materially injured or threatened with material injury, or the establishment of an industry in the United States is materially retarded, by reason of less-than-fair-value imports from Taiwan of polyvinyl alcohol, provided for in subheading 3905.30.00 of the Harmonized Tariff Schedule of the United States.[1]

For further information concerning the conduct of this phase of the investigation, hearing procedures, and rules of general application, consult the

[1] For purposes of this investigation, the Department of Commerce has defined the subject merchandise as all PVA hydrolyzed in excess of 80 percent, whether or not mixed or diluted with commercial levels of defoamer or boric acid. PVA in fiber form and PVB-grade low-ash PVA are not included in the scope of this investigation. PVB-grade low-ash PVA is defined to be PVA that meets the following specifications: Hydrolysis, Mole % of 98.40 ± 0.40, 4% Solution Viscosity 30.00 ± 2.50 centipois, and ash—ISE, wt% less than 0.60, 4% solution color 20mm cell, 10.0 maximum APHA units, haze index, 20mm cell, 5.0, maximum. The merchandise under investigation is currently classifiable under subheading 3905.30.00 of the Harmonized Tariff Schedule of the United States (HTSUS). Although the HTSUS subheading is provided for convenience and customs purposes, the written description of the merchandise under investigation is dispositive.

Commission's Rules of Practice and Procedure, part 201, subparts A through E (19 CFR part 201), and part 207, subparts A and C (19 CFR part 207).

DATES: *Effective Date:* September 13, 2010.

FOR FURTHER INFORMATION CONTACT: Angela M.W. Newell (202–708–5409), Office of Investigations, U.S. International Trade Commission, 500 E Street, SW., Washington, DC 20436. Hearing-impaired persons can obtain information on this matter by contacting the Commission's TDD terminal on 202–205–1810. Persons with mobility impairments who will need special assistance in gaining access to the Commission should contact the Office of the Secretary at 202–205–2000. General information concerning the Commission may also be obtained by accessing its Internet server (*http://www.usitc.gov*). The public record for this investigation may be viewed on the Commission's electronic docket (EDIS) at *http://edis.usitc.gov.*

SUPPLEMENTARY INFORMATION:

Background.—The final phase of this investigation is being scheduled as a result of an affirmative preliminary determination by the Department of Commerce that imports of polyvinyl alcohol from Taiwan are being sold in the United States at less than fair value within the meaning of section 733 of the Act (19 U.S.C. 1673b). The investigation was requested in a petition filed on September 7, 2004, by Celanese Chemicals, Ltd., Dallas, TX.

Participation in the investigation and public service list.—Persons, including industrial users of the subject merchandise and, if the merchandise is sold at the retail level, representative consumer organizations, wishing to participate in the final phase of this investigation as parties must file an entry of appearance with the Secretary to the Commission, as provided in section 201.11 of the Commission's rules, no later than 21 days prior to the hearing date specified in this notice. A party that filed a notice of appearance during the preliminary phase of the investigation need not file an additional notice of appearance during this final phase. The Secretary will maintain a public service list containing the names and addresses of all persons, or their representatives, who are parties to the investigation.

Limited disclosure of business proprietary information (BPI) under an administrative protective order (APO) and BPI service list.—Pursuant to section 207.7(a) of the Commission's rules, the Secretary will make BPI gathered in the final phase of this investigation available to authorized applicants under the APO issued in the investigation, provided that the application is made no later than 21 days prior to the hearing date specified in this notice. Authorized applicants must represent interested parties, as defined by 19 U.S.C. 1677(9), who are parties to the investigation. A party granted access to BPI in the preliminary phase of the investigation need not reapply for such access. A separate service list will be maintained by the Secretary for those parties authorized to receive BPI under the APO.

Staff report.—The prehearing staff report in the final phase of this investigation will be placed in the nonpublic record on December 15, 2010, and a public version will be issued thereafter, pursuant to section 207.22 of the Commission's rules.

Hearing.—The Commission will hold a hearing in connection with the final phase of this investigation beginning at 9:30 a.m. on January 25, 2011, at the U.S. International Trade Commission Building. Requests to appear at the hearing should be filed in writing with the Secretary to the Commission on or before January 14, 2011. A nonparty who has testimony that may aid the Commission's deliberations may request permission to present a short statement at the hearing. All parties and nonparties desiring to appear at the hearing and make oral presentations should attend a prehearing conference to be held at 9:30 a.m. on January 19, 2011, at the U.S. International Trade Commission Building. Oral testimony and written materials to be submitted at the public hearing are governed by sections 201.6(b)(2), 201.13(f), and 207.24 of the Commission's rules. Parties must submit any request to present a portion of their hearing testimony *on camera* no later than 7 business days prior to the date of the hearing.

Written submissions.—Each party who is an interested party shall submit a prehearing brief to the Commission. Prehearing briefs must conform with the provisions of section 207.23 of the Commission's rules; the deadline for filing is January 18, 2011. Parties may also file written testimony in connection with their presentation at the hearing, as provided in section 207.24 of the Commission's rules, and posthearing briefs, which must conform with the provisions of section 207.25 of the Commission's rules. The deadline for filing posthearing briefs is February 1, 2011; witness testimony must be filed no later than three days before the hearing. In addition, any person who has not entered an appearance as a party to the investigation may submit a written statement of information pertinent to the subject of the investigation, including statements of support or opposition to the petition, on or before February 1, 2011. On February 16, 2011, the Commission will make available to parties all information on which they have not had an opportunity to comment. Parties may submit final comments on this information on or before February 18, 2011, but such final comments must not contain new factual information and must otherwise comply with section 207.30 of the Commission's rules. All written submissions must conform with the provisions of section 201.8 of the Commission's rules; any submissions that contain BPI must also conform with the requirements of sections 201.6, 207.3, and 207.7 of the Commission's rules. The Commission's rules do not authorize filing of submissions with the Secretary by facsimile or electronic means, except to the extent permitted by section 201.8 of the Commission's rules, as amended, 67 FR 68036 (November 8, 2002). Even where electronic filing of a document is permitted, certain documents must also be filed in paper form, as specified in II (C) of the Commission's Handbook on Electronic Filing Procedures, 67 FR 68168, 68173 (November 8, 2002).

Additional written submissions to the Commission, including requests pursuant to section 201.12 of the Commission's rules, shall not be accepted unless good cause is shown for accepting such submissions, or unless the submission is pursuant to a specific request by a Commissioner or Commission staff.

In accordance with sections 201.16(c) and 207.3 of the Commission's rules, each document filed by a party to the investigation must be served on all other parties to the investigation (as identified by either the public or BPI service list), and a certificate of service must be timely filed. The Secretary will not accept a document for filing without a certificate of service.

Authority: This investigation is being conducted under authority of title VII of the Tariff Act of 1930; this notice is published pursuant to section 207.21 of the Commission's rules.

By order of the Commission.

Issued: September 28, 2010.

Marilyn R. Abbott,

Secretary to the Commission.

[FR Doc. 2010–24793 Filed 10–1–10; 8:45 am]

BILLING CODE 7020–02–P

INTERNATIONAL TRADE COMMISSION

[Investigation No. 337–TA–708]

In the Matter of Certain Stringed Musical Instruments and Components Thereof; Notice of Commission Determination Not to Review an Initial Determination Granting a Joint Motion to Terminate The Proceeding as to the Remaining Three Respondents; Termination of the Investigation

AGENCY: U.S. International Trade Commission.

ACTION: Notice.

SUMMARY: Notice is hereby given that the U.S. International Trade Commission has determined not to review an initial determination ("ID") (Order No. 15) granting a joint motion to terminate the investigation as to the three remaining respondents; the investigation is terminated.

FOR FURTHER INFORMATION CONTACT: James A. Worth, Office of the General Counsel, U.S. International Trade Commission, 500 E Street, SW., Washington, DC 20436, telephone (202) 205–3065. Copies of non-confidential documents filed in connection with this investigation are or will be available for inspection during official business hours (8:45 a.m. to 5:15 p.m.) in the Office of the Secretary, U.S. International Trade Commission, 500 E Street, SW., Washington, DC 20436, telephone (202) 205–2000. General information concerning the Commission may also be obtained by accessing its Internet server (*http://www.usitc.gov*). The public record for this investigation may be viewed on the Commission's electronic docket (EDIS) at *http://edis.usitc.gov.* Hearing-impaired persons are advised that information on this matter can be obtained by contacting the Commission's TDD terminal on (202) 205–1810.

SUPPLEMENTARY INFORMATION: This investigation was instituted on April 2, 2010, based upon a complaint filed on behalf of Geoffrey Lee McCabe of Hollywood, Florida ("McCabe") on February 26, 2010, and supplemented on March 18, 2010. 75 FR 16838 (April 2, 2010). The complaint alleged violations of section 337 of the Tariff Act of 1930 (19 U.S.C. 1337) in the importation into the United States, the sale for importation, and the sale within the United States after importation of certain stringed musical instruments and components thereof by reason of infringement of certain claims of United States Patent Nos. 5,986,191; 6,175,066; 7,470,841; 5,965,831 ("the '831 patent") and 6,891,094 ("the '094 patent"). The notice of investigation named as respondents Floyd Rose Guitars of Redmond, WA ("Floyd Rose Guitars"); Floyd Rose Marketing, Inc. of Neptune, NJ ("Floyd Rose Marketing"); Davitt & Hanser Music Co. d/b/a HHI of Hebron, KY; ("Davitt"); Ping Well Indus. Co., Ltd. of Taichung, Taiwan ("Ping Well"); Ibanez, Inc. (Hoshino) US of Bensalem, PA; Ibanez, Inc. (Hoshino) Japan; and Fuji Gakki Co., Ltd., of Nagoya, Japan.

On June 11, 2010, the Commission issued notice of its determination to terminate the '831 patent and the '094 patent from this investigation.

On June 29, 2010, the Commission issued notice of its determination not to review an ID terminating the investigation as to Floyd Rose Guitars, Floyd Rose Marketing, Davitt and Ping Well on the basis of a consent order.

On September 7, 2010, the ALJ issued Order No. 15, granting a motion to terminate the three remaining respondents. No petitions for review were filed.

The Commission has determined not to review the subject ID.

This action is taken under the authority of section 337 of the Tariff Act of 1930, as amended (19 U.S.C. 1337), and of section 210.42(h) of the Commission's Rules of Practice and Procedure (19 CFR 210.42(h)).

By order of the Commission.

Issued: September 28, 2010.

Marilyn R. Abbott,

Secretary to the Commission.

[FR Doc. 2010–24776 Filed 10–1–10; 8:45 am]

BILLING CODE 7020–02–P

DEPARTMENT OF LABOR

Office of the Secretary

Agency Information Collection Activities; Submission for OMB Review; Comment Request for Proposed Information Collection: Contractor Survey Under the Federal Employees' Compensation Act

ACTION: Notice.

SUMMARY: The Department of Labor (DOL) hereby announces the submission of the proposed information collection request (ICR) sponsored by the Office of Workers' Compensation Programs titled, "Contractor Survey under Federal Employees' Compensation Act," to the Office of Management and Budget (OMB) for review and approval in accordance with the Paperwork Reduction Act of 1995 (PRA) (Pub. L. 104–13, 44 U.S.C. chapter 35).

DATES: Submit comments on or before November 3, 2010.

ADDRESSES: A copy of this ICR, with applicable supporting documentation; including a description of the likely respondents, proposed frequency of response, and estimated total burden may be obtained from the RegInfo.gov Web site, *http://www.reginfo.gov/public/do/PRAMain,* or by contacting Michel Smyth by telephone at 202–693–4129 (this is not a toll-free number) or sending an e-mail to *DOL_PRA_PUBLIC@dol.gov.*

Submit comments about this request to the Office of Information and Regulatory Affairs, Attn: OMB Desk Officer for the Department of Labor, Office of Workers' Compensation Programs, Office of Management and Budget, Room 10235, Washington, DC 20503, Telephone: 202–395–6929/Fax: 202–395–6974 (these are not toll-free numbers), e-mail: *OIRA_submission@omb.eop.gov.*

FOR FURTHER INFORMATION: Contact Michel Smyth by telephone at 202–693–4129 (this is not a toll-free number) or by e-mail at *DOL_PRA_PUBLIC@dol.gov.*

SUPPLEMENTARY INFORMATION: The Federal Employees' Compensation Act provides workers' compensation coverage to three million federal and postal workers around the world for employment-related injuries and occupational diseases. The Division of Federal Employees' Compensation (DFEC) is charged with administering the FECA program. To obtain better feedback regarding various DFEC programs and functions, the DFEC is seeking approval to allow contract personnel such as Continuation of Pay (COP) Nurses, Field Nurses, and Rehabilitation Counselors, the opportunity to participate and provide feedback on DFEC effectiveness. These resources play a vital role in assisting the DFEC with the mission of returning injured employees to gainful employment. To this end, DOL seeks implementation of three separate surveys for this group. These surveys may be used on occasion, and a three-year approval for this new information collection is requested. For additional information, see the related notice published in the **Federal Register** on June 18, 2010 (75 FR 34769).

Under the Paperwork Reduction Act, a Federal agency generally cannot conduct or sponsor a collection of information unless it is approved by the OMB under the PRA and displays a currently valid OMB control number. Furthermore, the public is not required to respond to a collection of information

unless it displays a currently valid OMB control number. In addition, notwithstanding any other provisions of law, no person shall be subject to penalty for failing to comply with a collection of information if the collection of information does not display a currently valid OMB control number. *See* 5 CFR 1320.5(a) and 1320.6.

Parties interested in commenting on this request are encouraged to send comments to the OMB, Office of Information and Regulatory Affairs at the address shown in the **ADDRESSES** section within 30 days of publication of this notice in the **Federal Register**. In order to ensure the appropriate consideration, comments should reference OMB Information Collection Request Reference Number 201005–1240–004. The OMB is particularly interested in comments that:

- Evaluate whether the proposed collection of information is necessary for the proper performance of the functions of the agency, including whether the information will have practical utility;
- Evaluate the accuracy of the agency's estimate of the burden of the proposed collection of information, including the validity of the methodology and assumptions used;
- Enhance the quality, utility, and clarity of the information to be collected; and
- Minimize the burden of the collection of information on those who are to respond, including through the use of appropriate automated, electronic, mechanical, or other technological collection techniques or other forms of information technology, *e.g.,* permitting electronic submission of responses.

Agency: Office of Workers' Compensation Programs.

Type of Review: New collection (Request for a new OMB Control Number).

Title of Collection: Contractor Survey under the Federal Employees' Compensation Act.

Form Numbers: None.

OMB Control Number: 1240–ONEW.

Affected Public: Private Sector: Business or other for-profit.

Total Estimated Number of Responses: 330.

Total Estimated Annual Burden Hours: 82.

Estimated Time per Response: 15 minutes.

Total Estimated Annual Costs Burden: $0.

Dated: September 28, 2010.

Michel Smyth,

Departmental Clearance Officer.

[FR Doc. 2010–24769 Filed 10–1–10; 8:45 am]

BILLING CODE 4510–CH–P

DEPARTMENT OF LABOR

Bureau of Labor Statistics

Proposed Collection, Comment Request

ACTION: Notice.

SUMMARY: The Department of Labor, as part of its continuing effort to reduce paperwork and respondent burden, conducts a pre-clearance consultation program to provide the general public and Federal agencies with an opportunity to comment on proposed and/or continuing collections of information in accordance with the Paperwork Reduction Act of 1995 (PRA95) [44 U.S.C. 3506(c)(2)(A)]. This program helps to ensure that requested data can be provided in the desired format, reporting burden (time and financial resources) is minimized, collection instruments are clearly understood, and the impact of collection requirements on respondents can be properly assessed. The Bureau of Labor Statistics (BLS) is soliciting comments concerning the proposed revision of the "National Compensation Survey." A copy of the proposed information collection request (ICR) can be obtained by contacting the individual listed below in the **ADDRESSES** section of this notice.

DATES: Written comments must be submitted to the office listed in the **ADDRESSES** section of this notice on or before November 3, 2010.

ADDRESSES: Send comments to Nora Kincaid, BLS Clearance Officer, Division of Management Systems, Bureau of Labor Statistics, Room 4080, 2 Massachusetts Avenue, NE., Washington, DC 20212. Written comments also may be transmitted by fax to 202–691–5111 (this is not a toll free number.)

FOR FURTHER INFORMATION CONTACT: Nora Kincaid, BLS Clearance Officer, at 202–691–7628 (this is not a toll free number). (See **ADDRESSES** section.)

SUPPLEMENTARY INFORMATION:

I. Background

The National Compensation Survey (NCS) is an ongoing survey of earnings and benefits among private firms, State, and local government. The NCS is currently the integration of the sampling, collection, and processing for the Employment Cost Index (ECI), the Employee Benefits Survey (EBS), and the Locality Pay Surveys (LPS) into a single, unified program of compensation statistics. This integration improves data for policymakers and researchers, reduces respondent burden, improves the utilization of BLS resources, and enhances the published measures of compensation. Data from the integrated program include estimates of wages by job levels covering broad groups of related occupations, and data that directly links benefit plan costs with detailed plan provisions. The integrated program's single sample also produces both time-series indexes and cost levels for industry and occupational groups, thereby increasing the analytical potential of the data. Benefits of the integrated sample include: improved measures of trends; better integration of benefit costs and plan provisions; data for narrow occupations; and broad regional and occupational coverage. The NCS employs probability methods for selection of occupations. This ensures that sampled occupations represent all occupations in the workforce, while minimizing the reporting burden on respondents. Data from the NCS are critical for setting Federal white-collar salaries, determining monetary policy (as a Principal Federal Economic Indicator), and for compensation administrators and researchers in the private sector.

The survey collects data from a sample of employers. These data will consist of information about the duties, responsibilities, and compensation (earnings and benefits) for a sample of occupations for each sampled employer.

Data will be updated on a quarterly basis. The updates will allow for production of data on change in earnings and total compensation.

II. Current Action

Office of Management and Budget clearance is being sought for the National Compensation Survey.

The NCS collects earnings and work level data on occupations for the nation. The NCS also collects information on the cost, provisions, and incidence of all the major employee benefits through its benefit cost and benefit provision programs and publications.

The Administration has proposed 2011 budget calls for the elimination of the Locality Pay Survey (LPS), which is the part of the National Compensation Survey that provides occupational wage data by industry and specific geographic areas. The NCS is currently developing a new survey design that excludes the LPS. Planning and design for these changes are ongoing. NCS will

transition from an area-based survey design to a non-area-based national design, supplemented with modeled wages starting in FY 2011. Sample changes are reflected in the stated collection and respondent burden estimates.

The NCS data on benefit costs is used to produce the ECI and Employer Costs for Employee Compensation. The data provided will be the same, and the series will be continuous.

The NCS will continue to provide employee benefit provision and participation data. These data include estimates of how many workers receive the various employer-sponsored benefits. The data also will include information about the common provisions of benefit plans.

NCS has modified the collection forms, to 14 forms (normally having unique private industry and government initiation and update collection forms and versions.) Two forms are unique for private industry and government sample members who report data through the Secure Sockets Layer (SSL) encryption Web-site. For NCS update collection, the forms give respondents their previously reported information, the dates they expected change to occur to these data, and space for reporting these changes.

III. Desired Focus of Comments

The Bureau of Labor Statistics is particularly interested in comments that:

- Evaluate whether the proposed collection of information is necessary for the proper performance of the functions of the agency, including whether the information will have practical utility.
- Evaluate the accuracy of the agency's estimate of the burden of the proposed collection of information, including the validity of the methodology and assumptions used.
- Enhance the quality, utility, and clarity of the information to be collected.
- Minimize the burden of the collection of information on those who are to respond, including through the use of appropriate automated, electronic, mechanical, or other technological collection techniques or other forms of information technology, *e.g.,* permitting electronic submissions of responses.

Type of Review: Revision of a currently approved collection.

Agency: Bureau of Labor Statistics.

Title: National Compensation Survey.

OMB Number: 1220–0164.

Affected Public: Businesses or other for-profit; not-for-profit institutions; and State, local, and tribal government.

Total Respondents: 14,433 (three-year average).

Total Burden Cost (capital/startup): $0.

Total Burden Cost (operating/maintenance): $0.

All figures in the table below are based on a three-year average. The total respondents in the table are greater than the figure shown above because many respondents are asked to provide information relating to more than one form.

Form	Total respondents per form	Frequency	Total annual responses	Avg. minutes for the predominant form use **	Total hours
Establishment collection form (NCS Form 11–1G).	*	.....	*	19	*
Establishment collection form (NCS Form 11–1P).	1,960	At initiation	1,960	19	621
Earnings form (NCS Form 11–2G)	*	.....	*	20	*
Earnings form (NCS Form 11–2P)	1,960	At initiation	1,960	20	653
Wage Shuttle form computer generated earnings update form #.	10,665	Quarterly (3.827 avg.)	40,823	20	13,608
Work Level Form (NCS Form 11–3G)	*	.....	*	25	*
Work Level Form (NCS FORM 11–3P)	1,960	At initiation	1,960	25	817
Work Schedule Form (NCS 11–4G)	*	.....	*	10	*
Work Schedule Form (NCS 11–4P)	1,960	At initiation	1,960	10	327
Benefits Collection Form (NCS 11–5G)	*	.....	*	177	*
Benefits Collection Form (NCS 11–5P)	1,960	At initiation	1,960	178.5	5,831
Summary of Benefits (Benefit update form SO–1003) is computer generated #.	10,665	Quarterly ..... (3.83 avg.)	40,823	19.92	13,553
Collection not tied to a specific form (testing, Quality Assurance/Quality Measurement, etc.).**	1,808	1.89	3,420	30	1,710
Totals	32,938	.....	94,866	.....	37,120

* Most NCS Government forms (NCS 11–XG), are only used for government sample initiations, which is not currently planned during this Clearance cycle.

** Collection forms can have multiple uses. The table above shows the average collection times for the predominant uses of the forms. Record checks (for quality assurance and measurement) are done on a sub-sample of respondents verifying responses for pre-selected sections of the collection forms.

Includes IDCF form time (Web based screen for SSL encryption web-site secure.)

Comments submitted in response to this notice will be summarized and/or included in the request for Office of Management and Budget approval of the information collection request; they also will become a matter of public record.

Signed at Washington, DC, this 28th day of September 2010.

Kimberley Hill,

Chief, Division of Management Systems, Bureau of Labor Statistics.

[FR Doc. 2010–24775 Filed 10–1–10; 8:45 am]

BILLING CODE 4510–24–P

DEPARTMENT OF LABOR

Employment and Training Administration

Notice of Availability of Funds and Solicitation for Grant Applications (SGA) for YouthBuild Grants

AGENCY: Employment and Training Administration, U.S. Department of Labor.

Announcement Type: Notice of Solicitation for Grant Applications.

Funding Opportunity Number: SGA/DFA PY 10–02.

Catalog of Federal Domestic Assistance (CFDA) Number: 17.274.

Key Dates: The closing date for receipt of applications under this announcement is December 3, 2010. Applications must be received no later than 4 p.m. Eastern Time. A Virtual Prospective Applicant Conference (Webinar) will be held for this grant competition. The date and access information for this Virtual Prospective Applicant Conference will be posted on ETA's Web site at *http://www.doleta.gov/youth%5Fservices/youthbuildgrantee.cfm.* While a review of this Webinar is encouraged, it is not mandatory that applicants view this recording.

SUMMARY: The Employment and Training Administration (ETA), U.S. Department of Labor (DOL, or the Department), announces the availability of up to approximately $130 million in grant funds for YouthBuild Grants (the final amount available depends upon the amount of funds appropriated for YouthBuild in the Fiscal Year (FY) 2011 Department of Labor Appropriations Act). These funds are from separate appropriations and will be awarded separately. Thirty million dollars in FY 2010 funds are available for immediate award and will be reserved for awards to organizations that did not receive funding in the FY 2009 YouthBuild competition [SGA/DFA PY 08–07]. Awards from the FY 2011 appropriation will be selected after April 1, 2011, pending availability of funds.

YouthBuild Grants will be awarded through a competitive process. Grant funds will be used to provide disadvantaged youth with: The education and employment skills necessary to achieve economic self-sufficiency in occupations in high demand and postsecondary education and training opportunities; opportunities for meaningful work and service to their communities; and opportunities to develop employment and leadership skills and a commitment to community development among youth in low-income communities. As part of their program, YouthBuild grantees will tap the energies and talents of disadvantaged youth to increase the supply of permanent affordable housing for homeless individuals and low-income families and to help youth develop the leadership, learning, and high-demand occupational skills needed to succeed in today's global economy.

Based on the amount of FY 2010 funds available and our projections for FY 2011 funding, DOL hopes to serve approximately 8,500 youth participants during the grant period of performance, with projects operating in approximately 128 communities across the country. Under this solicitation, DOL will be awarding grants to organizations to oversee the provision of education and employment services to disadvantaged youth in their communities. Each applicant should indicate the proposed number of participants to be served based on an average cost per participant of between $15,000 and $18,000.

This solicitation provides background information and describes the application submission requirements, outlines the process that eligible entities must use to apply for funds covered by this solicitation, and details the evaluation criteria used as a basis for selecting grantees. Applicants should read the entire SGA and note specific sections that contain required information, such as in Section III.D, Section IV.B, and Section V.A, where failure to comply will be considered non-responsive and those applicants will then not be considered for funding.

The Department is committed to providing the public with an open and transparent grant selection process and to providing useful information to assist prospective applicants with developing quality proposals. One way to achieve these goals is through public access to selected and non-selected grant applications. Applicants are advised that the information they submit in response to this solicitation may be posted on a publicly accessible Web site or may otherwise be made available to the public.

ADDRESSES: Mailed applications must be addressed to the U.S. Department of Labor, Employment and Training Administration, Division of Federal Assistance, Attention: Donna Kelly, Grant Officer, Reference SGA/DFA PY 10–02, 200 Constitution Avenue, NW., Room N4716, Washington, DC 20210. For complete "Application and Submission Information," please refer to section IV.

SUPPLEMENTARY INFORMATION: This solicitation consists of nine sections:

- Section I provides background information on YouthBuild, YouthBuild program objectives, and additional information on the key components of YouthBuild to consider when preparing an application.
- Section II describes the size and nature of the anticipated awards.
- Section III describes eligibility information.
- Section IV provides information on the application and submission process.
- Section V describes the criteria against which applications will be reviewed and explains the proposal review process.
- Section VI provides award administration information.
- Section VII contains ETA agency contact information.
- Section VIII lists additional resources of interest to applicants.
- Section IX lists other pertinent information.

I. Funding Opportunity Description

YouthBuild is a youth and community development program that simultaneously addresses several core issues facing low-income communities: housing, education, employment, crime prevention, and leadership development. Part A of this section provides a background of the YouthBuild program. Part B describes the core objectives of the YouthBuild program, with Part C providing additional information on key components of YouthBuild to consider when preparing a grant application.

A. Background

The YouthBuild model balances in-school learning that leads to the achievement of a high school diploma or passing the General Education Development (GED) test, and construction skills training that prepares youth for career placement. The in-school component is an alternative education program that assists youth

who are often significantly behind in basic skills to obtain a high school diploma or GED credential. The primary target populations for YouthBuild are high school dropouts who may also be adjudicated youth, youth aging out of foster care, youth with disabilities, and other at-risk youth populations. The YouthBuild model enables these youth to access the education they need to move on to post-secondary education and/or high-growth, high-demand jobs which will enable them to prosper in the 21st century economy. There are currently over 200 YouthBuild programs operating in the United States, funded through various sources.

YouthBuild was started in East Harlem, New York in 1978 to provide education services for youth and teach construction skills while renovating and building homes for low-income families. It was replicated in five locations in New York City during the 1980s. In 1993, the YouthBuild program was established by Federal statute and the U.S. Department of Housing and Urban Development (HUD) was designated as the agency responsible for administering the program.

The YouthBuild Transfer Act (Pub. L. 109–281), enacted in September 2006, transferred the statutory authority for the program, with needed modifications and improvements, to subtitle D of Title I of the Workforce Investment Act (WIA) (29 U.S.C. 2918a).

Since its inception, the primary purpose of the YouthBuild program has been to provide job training and employment opportunities for disadvantaged youth. ETA will leverage its significant expertise and resources in the area of workforce investment under WIA to strengthen YouthBuild grantees' connections to One-Stop Career Centers and the Department's registered apprenticeship programs; leverage investments such as the Community-Based Job Training grants (*http://www.doleta.gov/business/Community-BasedJobTrainingGrants.cfm*); improve access to the post-secondary and community college system; and broker connections to the workforce system's business partners.

B. YouthBuild Program Objectives

Funds made available through the YouthBuild grants will be used to carry out a YouthBuild program with the following core objectives:

- To enable disadvantaged youth to obtain the education and employment skills necessary to achieve economic self-sufficiency in occupations in demand and post-secondary education and training opportunities;
- To provide disadvantaged youth with opportunities for meaningful work and service to their communities;
- To foster the development of employment and leadership skills and commitment to community development among youth in low-income communities; and
- To expand the supply of permanent affordable housing for homeless individuals and low-income families by utilizing the energies and talents of disadvantaged youth.

C. Key Components and Additional Information About the YouthBuild Grant Application Process

Although there is no way to address every question in this solicitation, the following questions are frequently asked and are included for your information.

What type of information should be addressed in the design of the program?

Section IV Part II of the application contains information about the Technical Proposal, which should address specific grant requirements identified in Section A of Part V of this SGA. Applicants applying for these grants are asked to describe their community, the youth to be served, the need for this Federal support, and their plan for providing education, skills training, and leadership development services to youth. They must also demonstrate that they have established partnerships with—or made a good faith effort to establish partnerships with—Local Workforce Investment Boards, the public school system, local community colleges, the juvenile justice system, registered apprenticeship programs, disability and mental health organizations, local faith-based and community organizations that serve at-risk and disadvantaged youth, and/or the local housing authority. Applicants are expected to identify their plan to leverage other Federal, State, or local funding, as well as private funding sources, to provide other "wraparound" supportive services as well as to support the costs associated with their defined construction project. Applicants are asked to describe their previous experience operating YouthBuild or youth workforce development programs of similar complexity that provide at-risk youth with educational and skill training in housing rehabilitation and construction activities. They are also asked to describe their organization's ability to manage this grant. In addition, applicants are asked to describe how occupational safety is addressed at their worksite. Applicants must provide a description of the worksite, using ETA Form 9143, that will be used to train YouthBuild participants and must provide the necessary paperwork that indicates access to this property has been granted for the program and participants. Finally, applicants are asked to discuss any training that is being provided in "green" construction.

What size grants are available?

Applicants can apply for three-year grants (two years of program operations with a nine- to twelve-month follow-up period) that will range from $700,000 to $1.1 million. These awards will support two years of core program operations (education, occupational skills training, and youth leadership development activities) plus an additional nine to twelve months of follow-up support services and tracking of participant outcomes for each cohort of youth. A minimum of five percent of total funds should be reserved for the nine- to twelve-month follow-up period.

If an organization was selected to receive a new award in FY 2009 (awarded July 2009), are they eligible to apply in this YouthBuild competition?

Yes; however, grantees who received funding from the FY 2009 YouthBuild competition [SGA/DFA PY 08–07], (including any affiliates or members or affiliates of a grantee's leadership team) will not receive funding from the $30 million remaining in FY 2010 funds. Projects funded from the $30 million in FY 2010 funds will be limited to applications submitted by organizations that did not receive funding from the FY 2009 YouthBuild competition [SGA/DFA PY 08–07]. If grantees who received funding from the FY 2009 YouthBuild [SGA/DFA PY 08–07] competition are selected for award in this competition, they will be funded from the FY 2011 appropriation, pending availability of funds. If an applicant that did not receive funding in the FY 2009 YouthBuild competition [SGA/DFA PY 08–07] does not receive an award from the approximately $30 million remaining in FY 2010 funds, their application will automatically be considered for an award from the FY 2011 appropriation.

What roles must partners play in partnerships?

Because disadvantaged youth possess a wide range of challenges that must be addressed through multiple strategies, prospective applicants must identify resources and services provided by faith-based and community organizations, government entities, and other youth-serving organizations. Collaboration across youth-serving agencies/organizations is critical to the

success of any youth initiative or program. A single organization does not typically have the resources to respond to the myriad of issues that impact youth most in need.

Partnerships and their roles will vary depending on the applicant's strategy and participant needs. However, DOL expects that the applicant will make a good-faith effort to attract the following partners and that each collaborative partner will, at a minimum, contribute as described below.

Education and training providers (Kindergarten through 12, adult education, community and technical colleges, 4-year colleges and universities, and other training entities) are important foundational partners to ensure the project's activities are tied to the broader continuum of education providers in the community. YouthBuild programs should have explicit, well-defined pathways to post-secondary educational opportunities such as community and 4-year colleges, registered apprenticeship programs, and other occupational training programs whenever possible to ensure the smooth transition of YouthBuild participants.

Employers (including professional organizations and trade associations) should be actively engaged in the project and should participate fully in grant activities including: Defining the program strategy and goals; identifying needed skills and competencies; designing training approaches and curricula; contributing financial support; sponsoring apprenticeship and pre-apprenticeship placements and activities; and, where appropriate, hiring qualified YouthBuild graduates.

The workforce investment system (which may include State and Local Workforce Investment Boards, State Workforce Agencies, and One-Stop Career Centers and their partners, as such terms are defined under the WIA) may play a number of roles, including: Identifying and assessing potential candidates for YouthBuild; working collaboratively to leverage WIA investments through co-enrollment with the Youth formula program; referring qualified candidates to the YouthBuild program for enrollment; providing access to "wraparound" supportive services, when appropriate; providing local labor market information to YouthBuild staff and participants; and connecting qualified YouthBuild graduates to employers that have existing job openings. Examples of YouthBuild programs working with the workforce system can be found in Training and Employment Notice No. 44–07, "Providing Strategies to the One-Stop Career Center System on Collaborating with YouthBuild Programs" at *http://wdr.doleta.gov/directives/corr_doc.cfm?DOCN=2646.*

The juvenile justice system is an important partner in referring potential participants to the YouthBuild program, providing support and guidance for YouthBuild participants with court involvement, and assisting in the reporting of recidivism rates among YouthBuild participants. Some YouthBuild participants may be placed in the program as a form of alternative sentencing or for re-entry services. In these instances, police, parole and probation officers, detention and juvenile correction facilities, judges, and social workers will be critically important partners for creating a safety net to prevent recidivism and ensure attachment to the community.

Faith-based and community organizations are valuable partners in the YouthBuild program. These organizations can serve as avenues of outreach to eligible youth and may provide a variety of grant services, such as case management, mentoring, and English as a Second Language (ESL) courses, as well as other comprehensive supportive services, when appropriate, for YouthBuild participants.

Each collaborative partner must have a clearly defined role. These roles must be verified through a letter of commitment (not just a letter of support) submitted by each partner. The letter of commitment must detail the role the partner will play in the project, including specific responsibilities and resources committed, if appropriate. These letters must clearly indicate the partnering organization's unique contribution and commitment to the project.

In situations where the applicant is unable to develop a partnership with one of the required types of organizations because the organization refuses to do so, the applicants should, at a minimum, demonstrate that the potential partner was contacted and provided a sufficient opportunity for response. It is suggested that applicants use registered mail to demonstrate such efforts.

What if two or more organizations submit separate applications to serve the same urban or rural community?

If more than one proposal to serve the same urban or rural community is rated highly, DOL will consider whether the urban or rural community is large enough to support more than one project.

Can I apply for multiple towns in one application?

If a town is large enough to reasonably support a YouthBuild program, the grant activities should generally be focused on one town. If the applicant determines that the town is not large enough to support a YouthBuild program, it may include additional towns and provide justification for one larger service area. If multiple towns are included together in the application, applicants may not request more than the maximum grant amount, $1.1 million.

What is the definition of "low-income" family for the purposes of program eligibility?

The definition of "low-income family" is taken directly from the United States Housing Act of 1937 (42 U.S.C. 1437a(b)(2)) which states:

"The term 'low-income families' means those families whose incomes do not exceed 80 per centum of the median income for the area, as determined by the Secretary with adjustments for smaller and larger families, except that the Secretary may establish income ceilings higher or lower than 80 per centum of the median for the area on the basis of the Secretary's findings that such variations are necessary because of prevailing levels of construction costs or unusually high or low family incomes."

The median income for each applicant's proposed area of service can be found at HUD's Web site: *http://www.huduser.org/datasets/il.html.*

What are allowable uses of grant funds?

Allowable uses of grant funds may include:

(1) Education and Workforce Activities, such as:

- Basic skills instruction and remedial education;
- Language instruction educational programs for individuals with limited English proficiency;
- Secondary education services and activities, including tutoring, study skills training, and dropout prevention activities, designed to lead to the attainment of a secondary school diploma, GED credential, or other State-recognized equivalent (including recognized alternative standards for individuals with disabilities);
- Counseling and assistance in obtaining post-secondary education and required financial aid;
- Alternative secondary school services;
- Work experience and skills training (coordinated, to the maximum extent feasible, with the YouthBuild Trainee

Apprenticeship Preparation program (YB–TAP),[1] pre-apprenticeship and registered apprenticeship programs) in housing rehabilitation and construction activities;

- Occupational skills training; and
- Other paid and unpaid work experiences, including internships and job shadowing.

(2) Case management, counseling services and related activities, such as comprehensive guidance and counseling on drug and alcohol abuse and referral.

(3) Youth development activities, such as:

- Community service and peer-centered activities encouraging responsibility and other positive social behaviors, and
- Leadership development activities including youth policy committees that allow YouthBuild participants to engage in local policy and decision-making related to the program.

(4) Supportive services and provision of needs-based payments necessary to enable individuals to participate in the program.

(5) Supportive services to assist individuals, for a period not to exceed 12 months after the completion of training, in obtaining or retaining employment, or applying for and transitioning to post-secondary education.

(6) Supervision and training for participants in the rehabilitation or construction of housing, including residential housing for homeless individuals or low-income families, or transitional housing for homeless individuals.

(7) Supervision and training for participants in the rehabilitation or construction of community and other public facilities.

(8) Payment of a portion of the administrative costs of the grantee.

(9) Mentoring (one-on-one, group or team) of participants by adults who have been appropriately screened and matched to work with youth.

(10) Provision of wages, stipends, or other benefits and incentives to participants in the program.

(11) Ongoing training and technical assistance for staff that are related to developing and carrying out the program.

(12) Activities related to follow-up and tracking of participant performance.

(13) Equipment and/or supplies related to the YouthBuild activities funded through this grant. The purchase of construction materials to be used as part of the direct training for YouthBuild participants would be an allowable use of grant funds.

What costs are allowable for orientation/mental toughness?

For guidance on orientation/mental toughness allowable costs, please go to: Mental Toughness/Orientation Allowable Costs in a YouthBuild Program *http://wdr.doleta.gov/directives/attach/TEGL/TEGL14-09acc.pdf.*

Can training be provided in industries other than construction?

No, DOL YouthBuild funds provided under this solicitation cannot be used to support occupational skills training other than construction. Programs may offer training in other industries; however, other funding sources must be used to support these career pathways.

Can training be provided in green construction and the use of sustainable building materials?

Yes, DOL encourages YouthBuild funds provided under this solicitation to be used to train youth in green construction skills that will prepare them for employment in green jobs and encourages the use of sustainable building materials in the construction and rehabilitation of affordable housing. However, this green construction skills training must be part of a construction curriculum that leads to an industry-recognized credential. That is, if youth complete a green construction module that is either a stand-alone module or is part of a general construction curriculum, it cannot be counted as a credential for purposes of the credential attainment performance measure. It is similar to Occupational Safety and Health Administration (OSHA) or Cardio Pulmonary Resuscitation (CPR) training; both are important parts of an overall construction training program but do not represent an industry-recognized credential.

Will Youthbuild projects be required to follow OSHA guidelines?

Yes, YouthBuild projects will be required to follow OSHA guidelines in the operation of their construction projects and to submit incident reports to DOL of injuries occurring on worksites. DOL will require that YouthBuild grantees:

- Provide comprehensive documented training on construction safety for youth working on YouthBuild projects, including requirements for youth to demonstrate knowledge of and proficiency in hazard identification, abatement, and safe work practices;
- Demonstrate compliance with Federal and State child labor laws and occupational safety and health regulations;
- Provide written worksite-specific safety plans overseen by an on-site supervisor with the knowledge, skills, and authority to correct safety and health hazards and enforce the site-specific safety plan;
- Provide necessary personal protective equipment to youth working on YouthBuild projects; and
- Report to DOL all worksite injuries and illnesses to youth working on YouthBuild projects, along with documentation on remedial measures to prevent future similar injuries and help ensure that YouthBuild is a model program that takes active steps for participant safety and health.

Can DOL funds be used for paid work experiences, needs-based stipends, wages, and other supportive services?

Payments to participants for classroom training, paid work experiences, and occupational skills training, as well as other needs-based supportive services, are allowable expenses. If the applicant plans to use grant funds for these purposes, sufficient information must be provided in the budget narrative to clearly justify the proposed amounts to be provided. Grantees are responsible for consulting with an accountant or other experts to ascertain if their payment structure complies with IRS standards.

Is the purchase of food an allowable use of funds?

DOL considers food to be an allowable cost for YouthBuild when used as a supportive service. To qualify, the provision of food must be needs-based and must be necessary to enable the recipient to participate in the program. The purchase of food is an unallowable cost for grant funds if expended for any reason other than needs-based supportive services. To provide food as a supportive service, grantees must create and consistently apply a written policy for determining needs-based services for participants. Grantees can provide food to enrollees as part of an on-site training class or work-site experience where access to food services and vendors is unavailable or unreliable, but must document in the grant files that providing such food

[1] The YouthBuild Trainee Apprenticeship Preparation (YB–TAP) program is a set of construction standards recognized by the U.S. Department of Labor's Office of Apprenticeship that are aligned with curricula from the Home Builders Institute's HPACT program, the National Center for Construction Education and Research, and the Building Trades Multi-Craft Core Curriculum. These standards are included as Appendix A of this solicitation.

directly is reasonable and necessary in order to ensure continuity of training services.

Should prospective applicants include travel costs associated with technical assistance and training in their budget?

Prospective applicants should include travel funds in their budget to cover travel for several key staff to attend at least one national meeting per year and at least two regional trainings per year.

How will success be measured under these grants?

The three outcome measures are:

- Literacy and numeracy gains;
- High School diploma/GED/degree or certificate attainment rate; and
- Placement in employment/post-secondary education/occupational skills training program/military.

In addition, grantees must report on a number of interim indicators that may serve as predictors of success. Interim indicators include:

- Enrollment rate;
- Participation in education/training activities;
- Workforce preparation;
- Mentoring;
- Community service/leadership activities;
- Placement retention rate; and
- Recidivism.

In applying for these grants, applicants agree to submit updated Management Information System (MIS) data on enrollee characteristics, services provided, placements, outcomes, and follow-up status. YouthBuild grantees are required to use the ETA Web-based Case Management and Performance System, which is provided to grantees at no cost.

What is the expected average cost per participant?

DOL expects the cost to be between $15,000 and $18,000 per participant.

When is the Youthbuild program expected to begin enrolling youth under this SGA?

Grantees must begin program operations, including the enrollment of youth, within six months from the date of the award.

The following questions involve allowable construction costs:

Can funds be used for rehabilitation or construction of buildings other than low-income housing?

Yes. In training participants, up to 10 percent of grant funds may be used in the rehabilitation or construction of community and other public facilities. The term "community and other public facilities" means those facilities which are publicly owned and publicly used for the benefit of the community. Examples include public-use buildings such as recreation centers, libraries, public park shelters, or public schools. This term may also encompass facilities used by the program but only if the facility is publicly owned and available for public entry and use. YouthBuild participants may not repair or renovate buildings used solely by the grantee, such as offices or classrooms. The remaining 90 percent of funds must be used to train participants in the rehabilitation or construction of low-income housing.

Would construction of a kitchen or shower facility be an allowable cost in a public facility?

If it is a public facility that needs to have a kitchen or shower facility installed and it is done under the 10 percent limitation and it is used for training purposes, then it is allowable.

Does a federally-qualified health care facility qualify as an allowable construction site?

The rehabilitation of a community health facility is permissible. The 10 percent limitation would apply to such costs.

Are architectural fees an allowable use of grant funds?

Yes, architectural fees, or a proportionate share thereof, are allowable when such fees can be related to items such as architectural plans or blueprints on which participants will be trained.

Are brokerage fees an allowable use of grant funds?

No, brokerage fees and other fees associated with the acquisition of property are not directly related to participant training and are not an allowable use of grant funds. We consider these fees to be too attenuated from the costs of participant training to be allowable.

Are subcontractor costs and supplies, (e.g., roofing, landscaping, etc.), allowable uses of grant funds?

Non-training services and deliverables that are not directly related to participant training are not an allowable use of grant funds unless they are used in the provision of training. Property enhancements, such as landscaping, are not allowable grant costs, if not performed by youth as part of their training activities.

Can unallowable costs be used to fulfill the 25 percent match requirement?

If the cost is not allowed to be paid with grant funds, it would also not be acceptable in fulfilling the 25 percent match requirement.

Can funds be used to purchase land?

Grant funds may not be used to purchase land.

Can grant funds be used to purchase a home to rehabilitate for the project?

Grantees may only charge a proportion of the purchase cost, exclusive of land, which is reflective of the portion of the property that will be used for participant training.

Should prospective applicants provide more than 25 percent match?

No. Any amounts over 25 percent match will not be considered in evaluating proposals. Grantees with additional resources should allocate them as leveraged funds for the purposes of planning and budgeting.

How will ETA evaluate the Youthbuild program?

ETA has contracted with an independent organization to conduct a rigorous, national evaluation of the YouthBuild program. A subset of grantees will be selected to participate in the evaluation and those that are selected will be required to participate.

The evaluation will use a random assignment design, which includes a computerized process that will randomly select which of the youth that grantees deem eligible and appropriate for the program will receive YouthBuild services. This process, similar to drawing names from a hat, is fair and ensures that everyone has the same chance of getting YouthBuild services. Those who are not admitted will form a control group and may be referred to other non-similar youth services. The grantees will be responsible for obtaining the consent of applicants to be randomly selected to be in the control group, and for informing the applicants that they have been selected. The evaluation contractor will work with each grantee to develop study procedures that minimize any disruption of the grantee's intake procedures and program operations. It is expected that the evaluation will not reduce the total number of youth who are served by the YouthBuild program. Grantees selected to participate in this study will be required to cooperate fully with ETA and the evaluation team in the conduct of the study. Grantee staff will be required to participate in one

survey and host site visits by the research team.

The Following Questions Involve the Random Assignment Evaluation:

Participation in the YouthBuild evaluation will provide important input into the national debate about policies and practices designed to improve the well-being of disadvantaged youth. Although DOL and the evaluation team are continuing to work out the details of the study design, below are answers to some questions grantees may have about the evaluation.

How will grantees be selected for the evaluation and how many will be selected?

Approximately 60 grantees will be selected to participate in the evaluation. Grantees will be selected randomly, but some types of grantees (for example, those that have never operated a YouthBuild program before) may be excluded from consideration. Larger programs may have a greater chance of being selected in order to ensure that the evaluation includes a sufficient number of young people.

YouthBuild has been evaluated before; why is this evaluation necessary?

Previous evaluations of YouthBuild have provided very useful information, but none of them was designed to determine what difference YouthBuild makes for the young people it serves compared to what would have happened if they did not participate. The new evaluation is the first one to use a random assignment design, which is considered to provide the most reliable evidence about the effectiveness of a social program. Other national youth programs such as the Job Corps, Service and Conservation Corps, and the National Guard Youth ChalleNGe program have already been part of random assignment evaluations. These evaluations are critical to ensuring that young people are receiving services that will improve their life opportunities and demonstrating to policy-makers that their investment is paying off.

Will the evaluation mean that programs serve fewer youth than before?

Most YouthBuild programs are only able to serve a very small fraction of the youth in their communities who might benefit and who apply. Programs participating in the evaluation will assess and screen youth to identify those who are eligible for YouthBuild and then use random assignment (like picking names from a hat) to select which of the eligible youth will be admitted. The youth who are selected will form the "program group" for the study. The youth who are not selected will form the "control group" and will not be permitted to enroll in YouthBuild during the study period, though the grantees may be able to refer them to other youth programs in the community. Ideally, the evaluation should not cause YouthBuild programs to serve fewer youth than they otherwise would. If the programs selected for the study do not currently have more qualified applicants than they can accept, additional recruiting may be necessary.

Is it unethical to use random assignment to decide which youth to accept?

No, it is not unethical to use random assignment to determine who receives services. Random assignment is a fair way to allocate scarce program slots when there are more qualified applicants than a program can serve. In fact, some youth not selected for the program may be more willing to accept that this was due to the "flip of a coin" rather than to their personal characteristics. Before it is finalized, the study design will be reviewed by an Institutional Review Board to ensure that youth in the study will be treated fairly.

What data will grantees be required to provide to the evaluators?

The grantees will not have to do anything more than they usually do to stay in touch with the young people who participate in their program. The evaluators will obtain most data for the study from the DOL YouthBuild MIS, from government records, and from surveys of youth in the program and control groups. Grantee staff will be required to participate in one survey and host site visits by the research team. Also, grantees will be required to collect and enter some information into the MIS for all youth entering the study, some of whom will be assigned to the control group.

Who will be doing the evaluation?

ETA selected a team of three organizations to conduct the evaluation: MDRC (the lead), Mathematica Policy Research, and Social Policy Research Associates (SPRA). MDRC and SPRA are very familiar with YouthBuild programs through past evaluations and assessments.

II. Award Information

A. Award Amount

Under this competition, ETA intends to fund approximately 28 grants ranging from $700,000 to $1.1 million from the $30 million in FY 2010 funds and approximately 100 grants in the same range of amounts from the FY 2011 appropriation (pending availability of funding); however, this does not preclude DOL from funding grants at either a lower or higher amount, or funding a smaller or larger number of projects, based on the type and the number of quality submissions. Applicants are encouraged to submit budgets for quality projects at whatever funding level within this range is appropriate to their project. Applications requesting more than $1.1 million will be considered nonresponsive. The average annual cost per participant should be between $15,000 and $18,000. In the event that additional funds become available, ETA reserves the right to use such funds to select additional grantees from applications submitted in response to this solicitation.

B. Period of Performance

Grants will be awarded for a 3-year period of performance. This includes two years of core program operations (education, occupational skills training, and youth leadership development activities) for one or more cohorts of youth, plus an additional nine to twelve months of follow-up support services and tracking of participant outcomes for each cohort of youth. Further, applicants should plan to fully expend grant funds during the period of performance, while ensuring full transparency and accountability for all expenditures. Therefore, applicants are encouraged to carefully consider their ability to spend the level of funding requested.

III. Eligibility Information

A. Eligible Applicants

Eligible applicants for these grants are public or private non-profit agencies or organizations (including a consortium of such agencies or organizations with a designated lead applicant), including, but not limited to:

- Faith-based and community organizations;
- An entity carrying out activities under WIA, such as a local workforce investment board, One-Stop Career Center, or local school board;
- A community action agency;
- A State or local housing development agency;
- An Indian tribe or other agency primarily serving Indians;
- A community development corporation;
- A State or local youth service conservation corps; or
- Any other public or private non-profit entity that is eligible to provide education or employment training

under a Federal program and can meet the required elements of the grant.

Grantees who received funding in the FY 2009 YouthBuild competition [SGA/DFA PY 08–07] (including any affiliates or members or affiliates of a grantee's leadership team) will not receive funding from the remaining approximately $30 million in FY 2010 funds. Projects funded from the FY 2010 funds will be limited to applications submitted by organizations that did not receive funding from the FY 2009 YouthBuild competition [SGA/DFA PY 08–07]. If FY 2009 YouthBuild competition [SGA/DFA PY 08–07] grantees are selected for funding in this competition, they will be funded from the FY 2011 appropriation, pending availability of funds.

B. Eligible Enrollees

An individual may participate in a YouthBuild program only if the individual:

1. Is between the ages of 16 and 24 on the date of enrollment; and
2. Is a member of a low-income family, and/or a youth in foster care (including youth aging out of foster care), and/or a youth offender, and/or a youth who is an individual with a disability, and/or a child of an incarcerated parent, and/or a migrant youth; and
3. Is a school dropout or an individual who has dropped out of high school and re-enrolled in an alternative school, if that re-enrollment is part of a sequential service strategy.

Organizations are not required to serve the entire age group population between 16 and 24, but all participants must fall within this range.

Up to (but not more than) 25 percent of the participants in the program may be youth who do not meet criteria B.2 or B.3 above, but:

- Are basic skills deficient, despite attainment of a secondary school diploma, GED credential, or other state-recognized equivalent (including recognized alternative standards for individuals with disabilities); or
- Have been referred by a local secondary school for participation in a YouthBuild program leading to the attainment of a secondary school diploma. Referrals from secondary schools to YouthBuild programs that provide only a GED degree are not allowed.

C. Veterans Priority

The Jobs for Veterans Act (Pub. L. 107–288) requires priority of service for veterans and spouses of certain veterans for the receipt of employment, training, and placement services in any job training program directly funded, in whole or in part, by DOL. The regulations implementing this priority of service can be found at 20 CFR part 1010. In circumstances where a grant recipient must choose between two qualified candidates for a service, one of whom is a veteran or eligible spouse, the veterans priority of service provisions require that the grant recipient give the veteran or eligible spouse priority of service by first providing him or her that service. To obtain priority of service, a veteran or spouse must meet the program's eligibility requirements. Grantees must comply with DOL guidance on veterans' priority. ETA's Training and Employment Guidance Letter (TEGL) No. 10–09 (issued November 10, 2009) provides guidance on implementing priority of service for veterans and eligible spouses in all qualified job training programs funded in whole or in part by DOL. TEGL No. 10–09 is available at *http://wdr.doleta.gov/directives/corr_doc.cfm?DOCN=2816.*

D. Matching Funds and Leveraged Resources

Aligning resources and leveraging funding are key components of success under the YouthBuild grant program. Therefore, applicants must provide cash or in-kind resources equivalent to 25 percent of the grant award amount as matching funds. Please note that neither prior investments nor Federal resources may be counted towards the matching funds threshold. Construction materials that are acquired without grant funds and are used for approved projects as part of the training for YouthBuild participants may be used in fulfilling the 25 percent match requirement.

To be allowable as part of match, a cost must be an allowable charge for Federal grant funds. Determinations of allowable costs will be made in accordance with the applicable Federal cost principles as indicated in Part IV.E. If the cost would not be allowable as a grant-funded charge, then it also cannot be counted toward matching funds.

Please note that in addition to the Federal amount you are requesting, the matching funds must be shown on the SF–424 application and SF–424A budget form. The SF–424A form is required even though the form states that it should only be used for non-construction. If there is a discrepancy in the amount of funds specified on the SF–424, SF–424A, or Budget Narrative, DOL will consider the amount of funds specified on the SF–424 as the applicant's match.

Applicants are expected to fulfill the match amount specified during the grant period of performance. If the match amount specified by the applicant is not met or if a portion of the matching funds are found to be an unallowable cost, the amount of DOL grant funds may be decreased on a dollar for dollar basis. If this occurs the grantee may be required to repay funds to DOL. Applicants who fail to provide a 25 percent match will be considered non-responsive.

Applicants are encouraged to leverage additional resources beyond the match amount to supplement the project as a whole. Any cash or in-kind resources committed beyond the 25 percent of the grant award amount required as matching funds should be counted as leveraged funds. Applicants must clearly make the distinction between what will be considered matching funds and what will be considered "additional" leveraged resources, and explain leveraged resources in the budget narrative separately from the explanation of match. Do not include the leveraged funds on the SF–424 or SF–424A.

Both matching funds and leveraged resources could come from a variety of sources, including: public sector (*e.g.,* State or local governments); non-profit sector (*e.g.,* community organizations, faith-based organizations, or education and training institutions); private sector (*e.g.,* businesses or industry associations); investor community (*e.g.,* angel networks or economic development entities); and the philanthropic community (*e.g.,* foundations).

Applications will be evaluated on how the match and leveraged funds are fully integrated in support of program outcomes. Grantees must track and report both match and other non-Federal leveraged resources quarterly on Form ETA 9130. Instructions and the form may be found at *http://www.doleta.gov/grants/financial_reporting.cfm.*

IV. Application and Submission Information

A. How To Obtain an Application Package

This SGA contains all of the information and links to forms needed to apply for grant funding.

B. Content and Form of Application Submission

The proposal will consist of three separate and distinct parts—(I) a cost proposal; (II) a technical proposal (with attachments); and (III) a description of and information on the work site. Applications that do not contain all

three parts (including the required attachments) or that fail to adhere to the instructions in this section will be considered non-responsive and will not be considered. It is the applicant's responsibility to ensure that the funding amount requested is consistent across all parts and sub-parts of the application.

Part I. The Cost Proposal. The Cost Proposal must include the following four items:

• SF–424, "Application for Federal Assistance" (available at *http://www.grants.gov/agencies/forms_repository_information.jsp.* The SF–424 must clearly identify the applicant and be signed by an individual with authority to enter into a grant agreement. Upon confirmation of an award, the individual signing the SF–424 on behalf of the applicant will be considered the authorized representative of the applicant.

• All applicants for Federal grant and funding opportunities are required to have a Data Universal Numbering System (D–U–N–S® number). *See* Office of Management and Budget (OMB) Notice of Final Policy Issuance, 68 FR 38402, June 27, 2003. Applicants must supply their D–U–N–S® number on the SF–424. The D–U–N–S® number is a non-indicative, nine-digit number that uniquely identifies business entities. Obtaining a D–U–N–S® number is easy and there is no charge. To obtain a D–U–N–S® number, call 1–866–705–5711 or access this Web site: *www.dunandbradstreet.com.*

• The SF–424A Budget Information Form (available at *http://www.grants.gov/agencies/forms_repository_information.jsp*) In preparing the Budget Information Form, the applicant must provide a concise narrative explanation to support the request, explained in detail below.

The amount of Federal funding requested for the **entire period of performance** (*i.e.,* three years) must be included on both the SF–424 and SF–424A Budget Information Form. Only an applicant's match amount (not other leveraged resources) should be listed on the SF–424 (Block 18) and SF–424A Budget Information Form (Sections A & C). Please note that the funding amount included on the SF–424 will be considered the official funding amount requested.

• *Budget Narrative:* The budget narrative must provide a description of costs associated with each line item on the SF–424A. Additionally, the budget narrative should break down the budget, match, and leveraged resources by project activity, must discuss cost-per-participant, and must discuss precisely how the administrative costs support the project goals. If the applicant plans to use grant funds for paid work experiences, needs-based payments, and other supportive services for the participants, sufficient information must be provided in the budget narrative to clearly justify the proposed amounts to be provided.

Please note that applicants that fail to provide a SF–424, SF–424A, a D–U–N–S® number, and a budget narrative will be considered non-responsive, and removed from consideration before the technical review process. Applicants are also encouraged, but not required, to submit OMB Survey No. 1890–0014: Survey on Ensuring Equal Opportunity for Applicants, which can be found at *http://www07.grants.gov/applicants/tips_resources_from_grantors.jsp#13.*

Part II. The Technical Proposal. The Technical Proposal must demonstrate the applicant's capability to implement the YouthBuild grant project in accordance with the provisions of this solicitation. The guidelines for the content of the Technical Proposal are provided in Part V.A of this SGA. The Technical Proposal is limited to 20 double-spaced, single-sided 8.5 x 11 inch pages with 12 point text font and 1 inch margins. Applicants should number the Technical Proposal beginning with page number 1. Any materials beyond the 20-page limit will not be read.

Part IIA. Attachments to the Technical Proposal. In addition to the 20 page Technical Proposal, the applicant must submit the following required attachments:

(a) An organizational chart that reflects how the YouthBuild program will be staffed. In instances where the YouthBuild program is part of a larger organization (*e.g.,* a Housing Authority), include a diagram that indicates how the YouthBuild program fits within the larger organization;

(b) A timeline outlining project activities;

(c) Letters of commitment from partners; and

(d) A two-page Abstract summarizing the proposed project, including applicant name, project title, a description of the area to be served, and the funding level requested. The Abstract must note whether the application is being submitted as an urban, rural, or Native American application.

These additional required materials do not count against the 20 page limit for the Technical Proposal, but may not exceed 20 pages. Any additional materials beyond the 20 page attachment limit will not be read. Any additional materials other than those listed in Part II A a), b), c), or d) should not be included in the Technical Proposal Attachment and will not be read. ETA does not permit general letters of support submitted by organizations or individuals that are not partners in the proposed project and that do not directly identify the specific commitment or roles of the project partners. Therefore, additional materials, such as résumés or general letters of support or commitment, will not be read.

The required attachments must be affixed as separate, clearly identified appendices to the application. Commitment letters must accompany the application electronically, not be mailed separately. Please note that applicants should not send letters of commitment separately to ETA because letters received separately are tracked through a different system and will not be attached to the application for review. Applications that do not include the required attachments will be considered non-responsive and not reviewed.

An audited financial statement and accompanying management letter (if applicable) is requested in Section V.A.2.i, but neither counts towards the page limitations for either the Technical Proposal or the Technical Proposal Attachment and should be included as an appendix. This appendix has no page limits.

Part III. The Worksite Description. The applicant must submit the Worksite Description Form (ETA–9143) including all requested attachments, which describes the planned worksite that will be used for on-site housing rehabilitation and construction training for youth participants. These forms can be found at *http://www.doleta.gov/youth%5Fservices/pdf/Work_Site_DescriptionAugus%202010.xls.* Information on property for use in year two of your grant may be required. These forms do not count towards the 20 page limitation for either the Technical Proposal or the Technical Proposal Attachment; this is a separate part of the proposal. Please note that before finalizing the grant award document, prospective award winners must be able to re-verify information on the worksite and access to the property before grant funds are released.

Section 10 of ETA 9143 requests information from the property owner or property management company or companies allowing access to the housing site(s) for on-site construction training. DOL will deem non-responsive any application that fails to specifically identify the location of the on-site

construction, including evidence of site access. Guidance on evidence of site access is as follows:

- If the applicant has a contract or option to purchase the property, include a copy of the contract or option; or
- If a third party owns the property or has a contract or option to purchase, that third party must provide a letter stating the nature of the ownership and specifically providing access to the property for the purposes of the program and the time frame in which the property will be available. In the case of a contract or option, include a copy of the document. These should be included as part of Part III of your application and do not count against page limitations.

C. Submission Process, Date, Times, and Addresses

Applications may be submitted electronically on Grants.gov or in hard copy by mail or hand delivery. Applicants submitting proposals in hard copy must submit an original signed application (including the SF–424) and one "copy-ready" version free of bindings, staples, or protruding tabs to ease in the reproduction of the proposal by DOL. Applicants submitting proposals in hard copy also must provide an identical electronic copy of the proposal on compact disc (CD). If discrepancies between the hard copy submission and CD copy are identified, the application on the CD will be considered the official application for evaluation purposes. Failure to provide identical applications in hard copy and CD format may have an impact on the overall evaluation.

The closing date for receipt of applications of this announcement is December 3, 2010. Applications must be received at the address below no later than 4 p.m. Eastern Time. Applications sent by e-mail, telegram, or facsimile (FAX) will not be accepted. If an application is submitted by both hard copy and through *http://www.grants.gov,* a letter must accompany the hard copy application stating why two applications were submitted and the differences between the two submissions. If no letter accompanies the hard copy, we will review the copy submitted through *http://www.grants.gov.* Applications that do not meet the conditions set forth in this notice will be considered non-responsive. No exceptions to the mailing and delivery requirements set forth in this notice will be granted. Further, documents submitted separately from the application, before or after the deadline, will not be accepted as part of the application.

Mailed applications must be addressed to the U.S. Department of Labor, Employment and Training Administration, Division of Federal Assistance, Attention: Donna Kelly, Grant Officer, Reference SGA/DFA PY 10–02, 200 Constitution Avenue, NW., Room N4716, Washington, DC 20210. Applicants are advised that mail delivery in the Washington, DC area may be delayed due to mail decontamination procedures. Hand-delivered proposals will be received at the above address at the 3rd and C Street entrance. All overnight mail will be considered to be hand-delivered and must be received at the designated place by the specified closing date and time.

Applications that are submitted through Grants.gov must be successfully submitted at *http://www.grants.gov* no later than 4 p.m. Eastern Time on the closing date, and then subsequently validated by Grants.gov. The submission and validation process is described in more detail below. The process can be complicated and time-consuming. Applicants are strongly advised to initiate the process as soon as possible and to plan for time to resolve technical problems if necessary.

The Department strongly recommends that before the applicant begins to write the proposal, applicants should immediately initiate and complete the "Get Registered" registration steps at *http://www.grants.gov/applicants/get_registered.jsp.* Applicants should read through the registration process carefully before registering. These steps may take as much as four weeks to complete and this time should be factored into plans for electronic submission in order to avoid unexpected delays that could result in the rejection of an application. The site also contains registration checklists to help walk you through the process. The Department strongly recommends that applicants download the "Organization Registration Checklist" at *http://www.grants.gov/assets/Organization_Steps_Complete_Registration.pdf* and prepare the information requested before beginning the registration process. Reviewing and assembling required information before beginning the registration process will alleviate last minute searches for required information and save time.

To register with Grants.gov, applicants applying electronically must have a D–U–N–S® Number and must register with the Federal Central Contractor Registry (CCR). Step-by-step instructions for registering with CCR can be found at *http://www.grants.gov/applicants/org_step2.jsp.* All applicants must register with CCR in order to apply online. Failure to register with the CCR will result in your application being rejected by Grants.gov during the submission process.

The next step in the registration process is creating a username and password with Grants.gov to become an Authorized Organizational Representative (AOR). AORs will need to know the D–U–N–S® Number of the organization for which they will be submitting applications to complete this process. To read more detailed instructions for creating a profile on Grants.gov visit: *http://www.grants.gov/applicants/org_step3.jsp.*

After creating a profile on Grants.gov, the E-Biz Point of Contact (E-Biz POC), a representative from your organization who is the contact listed for CCR, will receive an e-mail to grant the AOR permission to submit applications on behalf of their organization. The E-Biz POC will then log in to Grants.gov and approve an applicant as the AOR, thereby giving him or her permission to submit applications. To learn more about AOR Authorization visit: *http://www.grants.gov/applicants/org_step5.jsp* or to track AOR status visit: *http://www.grants.gov/applicants/org_step6.jsp.*

An application submitted through Grants.gov constitutes a submission as an electronically signed application. The registration and account creation with Grants.gov, with E-Biz POC approval, establishes an AOR. When you submit the application through Grants.gov, the name of your AOR on file will be inserted into the signature line of the application. Applicants must register the individual who is able to make legally binding commitments for the applicant organization as the AOR; this step is often missed and it is crucial for valid submissions.

When a registered applicant submits an application with Grants.gov, an electronic time stamp is generated within the system when the application is successfully received by Grants.gov. Within two business days of application submission, Grants.gov will send the applicant two e-mail messages to provide the status of the application's progress through the system. The first e-mail, sent almost immediately, will contain a tracking number and will confirm receipt of the application by Grants.gov. The second e-mail will indicate the application has either been successfully validated or has been rejected due to errors. Only applications that have been successfully submitted by the deadline and subsequently successfully validated will be considered. It is the sole responsibility of the applicant to ensure a timely

submission. While it is not required that an application be successfully validated before the deadline for submission, it is prudent to reserve time before the deadline in case it is necessary to resubmit an application that has not been successfully validated. Therefore, sufficient time should be allotted for submission (two business days) and, if applicable, additional time to address errors and receive validation upon resubmission (an additional two business days for each ensuing submission). It is important to note that if sufficient time is not allotted and a rejection notice is received after the due date and time, the application will not be considered.

To ensure consideration, the components of the application must be saved as .doc, .xls or .pdf files. If submitted in any other format, the applicant bears the risk that compatibility or other issues will prevent us from considering the application. ETA will attempt to open the document but will not take any additional measures in the event of problems with opening. In such cases, the non-conforming application will not be considered for funding.

We strongly advise applicants to use the plethora of tools and documents, including FAQs, which are available on the "Applicant Resources" page at *http://www.grants.gov/applicants/resources.jsp.*

ETA encourages new prospective applicants to view the online tutorial, "Grant Applications 101: A Plain English Guide to ETA Competitive Grants," available through Workforce3One at: *http://www.workforce3one.org/page/grants_toolkit.*

To receive updated information about critical issues, new tips for users, and other time sensitive updates as information is available, applicants may subscribe to "Grants.gov Updates" at *http://www.grants.gov/applicants/e-mail_subscription_signup.jsp.*

If applicants encounter a problem with Grants.gov and do not find an answer in any of the other resources, call 1–800–518–4726 to speak to a Customer Support Representative or e-mail "*support@grants.gov.*" The Contact Center is open 24 hours a day, seven days a week. It is closed on Federal holidays.

Late Applications: For applications submitted on Grants.gov, only applications that have been successfully submitted no later than 4 p.m. Eastern Time on the closing date and then successfully validated will be considered. Applicants take a significant risk by waiting to the last day to submit by Grants.gov.

Any hard copy application received after the exact date and time specified for receipt at the office designated in this notice will not be considered, unless it is received before awards are made, it was properly addressed, and it was: (a) Sent by U.S. Postal Service mail, postmarked not later than the fifth calendar day before the date specified for receipt of applications (*e.g.,* an application required to be received by the 20th of the month must be postmarked by the 15th of that month); or (b) sent by professional overnight delivery service to the addressee not later than one working day before the date specified for receipt of applications. "Postmarked" means a printed, stamped, or otherwise placed impression (exclusive of a postage meter machine impression) that is readily identifiable, without further action, as having been supplied or affixed on the date of mailing by an employee of the U.S. Postal Service. Therefore, applicants should request the postal clerk to place a legible hand cancellation "bull's eye" postmark on both the receipt and the package. Failure to adhere to these instructions will be a basis for a determination that the application was not filed on time and will not be considered. Evidence of timely submission by a professional overnight delivery service must be demonstrated by equally reliable evidence created by the delivery service provider indicating the time and place of receipt.

D. Intergovernmental Review

This funding opportunity is not subject to Executive Order (EO) 12372, "Intergovernmental Review of Federal Programs."

E. Funding Restrictions

All proposal costs must be necessary and reasonable in accordance with Federal guidelines. Determinations of allowable costs will be made in accordance with the applicable Federal cost principles, e.g., Non-Profit Organizations—OMB Circular A–122. Disallowed costs are those charges to a grant that the grantor agency or its representative determines not to be allowed in accordance with the applicable Federal cost principles or other conditions contained in the grant. Applicants will not be entitled to reimbursement of pre-award costs.

1. Legal Rules Pertaining to Inherently Religious Activities by Organizations That Receive Federal Financial Assistance

Direct Federal grants, sub-awards, or contracts under this program must not be used to support inherently religious activities such as religious instruction, worship, or proselytization. Therefore, organizations must take steps to separate, in time or location, their inherently religious activities from the services supported with DOL financial assistance under this program. Neutral, secular criteria that neither favor nor disfavor religion must be employed in the selection of grant and sub-grant recipients. In addition, under WIA and DOL regulations implementing WIA, a recipient may not use direct Federal assistance to train a participant in religious activities, or employ participants to construct, operate, or maintain any part of a facility that is used or to be used for religious instruction or worship. *See* 29 CFR 37.6(f). Under WIA, "[n]o individual shall be excluded from participation in, denied the benefits of, subjected to discrimination under, or denied employment in the administration of or in connection with, any such program or activity because of race, color, religion, sex (except as otherwise permitted under Title IX of the Education Amendments of 1972 and the Religious Freedom Restoration Act of 1993), national origin, age, disability, or political affiliation or belief." 29 U.S.C. 2938(a)(2). Regulations on the Equal Treatment for Faith-Based Organizations, which includes the prohibition against supporting inherently religious activities with direct DOL financial assistance, can be found at 29 CFR part 2, subpart D. Provisions relating to the use of indirect support (such as vouchers) are at 29 CFR 2.33(c) and 20 CFR 667.266.

A faith-based organization receiving Federal financial assistance retains its independence from Federal, State, and local governments, and may continue to carry out its mission, including the definition, practice, and expression of its religious beliefs. For example, a faith-based organization may use space in its facilities to provide secular programs or services supported with Federal financial assistance without removing religious art, icons, scriptures, or other religious symbols. In addition, a faith-based organization that receives Federal financial assistance retains its authority over its internal governance, and it may retain religious terms in its organization's name, select its board members on a religious basis, and

include religious references in its organization's mission statements and other governing documents in accordance with all program requirements, statutes, and other applicable requirements governing the conduct of DOL funded activities.

The Religious Freedom Restoration Act (RFRA), 42 U.S.C. sec. 2000bb, applies to all Federal law and its implementation. If your organization is a faith-based organization that makes hiring decisions on the basis of religious belief, it may be entitled to receive Federal financial assistance under Title I of WIA and maintain that hiring practice even though Section 188 of WIA contains a general ban on religious discrimination in employment. If you are awarded a grant, you will be provided with information on how to request such an exemption.

Faith-based and community organizations may reference "Transforming Partnerships: How to Apply the U.S. Department of Labor's Equal Treatment and Religion-Related Regulations to Public-Private Partnerships" at: *http://www.workforce3one.org/view/5566/info.*

2. Indirect Costs

As specified in OMB Circular Cost Principles, indirect costs are those that have been incurred for common or joint objectives and cannot be readily identified with a particular final cost objective. In order to use grant funds for indirect costs incurred, the applicant must obtain an Indirect Cost Rate Agreement with its Federal Cognizant Agency either before or shortly after the grant award. If an applicant already has a Federal Indirect Cost Rate Agreement, that agreement may be used.

3. Administrative Costs

Under the YouthBuild grants, an entity that receives a grant to carry out a project or program may not use more than 15 percent of the amount of the grant to pay administrative costs associated with the program or project. Administrative costs could be direct or indirect costs and are defined at 20 CFR 667.220. Administrative costs do not need to be identified separately from program costs on the SF–424A Budget Information Form. They should be discussed in the budget narrative and tracked through the grantee's accounting system. To claim any administrative costs that are also indirect costs, the applicant must obtain an indirect cost rate agreement from its Federal Cognizant Agency as specified above.

4. Intellectual Property Rights

The Federal Government reserves a paid-up, nonexclusive, and irrevocable license to reproduce, publish or otherwise use, and to authorize others to use for Federal purposes: (i) The copyright in all products developed under the grant, including a subgrant or contract under the grant or subgrant; and (ii) any rights of copyright to which the grantee, subgrantee or a contractor purchases ownership under an award (including but not limited to curricula, training models, technical assistance products, and any related materials). Such uses include, but are not limited to, the right to modify and distribute such products worldwide by any means, electronically or otherwise. Federal funds may not be used to pay any royalty or licensing fee associated with such copyrighted material, although they may be used to pay costs for obtaining a copy which is limited to the developer/seller costs of copying and shipping. If revenues are generated through selling products developed with grant funds, including intellectual property, these revenues are program income. Program income is added to the grant and must be expended for allowable grant activities.

If applicable, the following needs to be on all products developed in whole or in part with grant funds:

This workforce product was funded by a grant awarded by the U.S. Department of Labor's Employment and Training Administration. The product was created by the grantee and does not necessarily reflect the official position of the U.S. Department of Labor. The Department of Labor makes no guarantees, warranties, or assurances of any kind, express or implied, with respect to such information, including any information on linked sites and including, but not limited to, accuracy of the information or its completeness, timeliness, usefulness, adequacy, continued availability, or ownership. This product is copyrighted by the institution that created it. Internal use by an organization and/or personal use by an individual for non-commercial purposes is permissible. All other uses require the prior authorization of the copyright owner.

5. Salary and Bonus Limitations

Under Public Law 109–234, none of the funds appropriated in Public Law 109–149 or prior Acts under the heading "Employment and Training Administration" that are available for expenditure on or after June 15, 2006, may be used by a recipient or sub-recipient of such funds to pay the salary and bonuses of an individual, either as direct costs or indirect costs, at a rate in excess of Executive Level II, except as provided for in section 101 of Public Law 109–149. This limitation applies to grants funded by this Solicitation under Public Law 111–117, and will also apply to grants funded by this Solicitation under the FY 2011 appropriation. The salary and bonus limitation does not apply to vendors providing goods and services as defined in OMB Circular A–133 (codified at 29 CFR Parts 96 and 99). *See* TEGL No. 5–06 for further clarification: *http://wdr.doleta.gov/directives/corr_doc.cfm?DOCN=2262.*

F. Other Submission Requirements

Withdrawal of Applications: Applications may be withdrawn by written notice or telegram (including mailgram) to the Grant Officer received at any time before an award is made. Applications may be withdrawn in person by the applicant or by an authorized representative thereof, if the representative's identity is made known and the representative signs a receipt for the return of the proposal.

V. Application Review Information

A. Evaluation Criteria

This section identifies and describes the criteria that will be used to evaluate proposals for a YouthBuild Grant. These criteria and point values are:

Criterion	Points
1. Statement of Need	10
2. Program Management, Organizational Capacity, and Evidence of Past and Projected Success in YouthBuild or Other Relevant Programs	35
3. Project Design, Service Strategy, and Program Outcomes	40
4. Linkages to Key Partners, Match and Leveraged Resources	15
Total	100

1. Statement of Need (10 Points)

Please describe the community where the YouthBuild program will operate. Identify the need for a YouthBuild program in the community that is proposed to be served through the grant and demonstrate the need for the project in that area. Applicants are expected to present information on various characteristics of the community(ies) in which they expect to operate. If there are particular neighborhoods within the city where the grant will be focused, describe these neighborhoods and provide available data specific to those areas. Required information includes the population of the area, its poverty rate, shortage of affordable housing, its unemployment rate, the graduation rate, and the number of 18–24 year olds

without a high school diploma. In addition, because one of the goals of the YouthBuild program is to provide for the inclusion of tenants who were previously homeless individuals or families in the rental of housing provided through the program, the incidence of homelessness in your community should be included.

To obtain these indicators, applicants can use census tract data from the 2000 census—go to *http://factfinder.census.gov* and use the link on the left for People. Graduation rates for every school district in the nation may be found at *http://www.edweek.org/apps/maps/.*

All of these indicators must be presented in chart form, which may be single-spaced, and the applicant must provide the sources for the data provided. In addition, applicants should provide information on the economic and employment factors facing the community, including negative factors as well as promising economic and employment trends that will require an educated and skilled workforce.

If the organization plans to build or rehabilitate houses or community/public facilities in a different community from that in which youth will be recruited, present the homelessness and poverty data for that area and the unemployment, poverty, and graduation rates for the area in which the organization will be recruiting youth participants.

Applicants will be evaluated on:

- The clear and specific need for a YouthBuild program in their community, as evidenced by high poverty and low graduation rates; and
- The degree to which other factors in distressed communities, such as crime, unemployment, plant closures, or other indicators of economic decline, particularly in comparison with other areas of the city or state, are negatively impacting youth and their families.

2. Program Management, Organizational Capacity, and Evidence of Past and Projected Success in YouthBuild or Other Relevant Programs (35 Points).

i. Program Management and Organizational Capacity (15 Points)

The applicant must provide a description of the applicant's organization and a statement of its qualifications for running a YouthBuild program, including years of operation, current annual budget, continuity of leadership, and the experience of staff, their roles, as well as those of any consultants and collaborative organizations that may be part of operating the YouthBuild program. Applicants should include an organizational chart that reflects how the YouthBuild program will be staffed and, in instances where the YouthBuild program is part of a larger organization (*e.g.,* a Housing Authority), a diagram that indicates where the YouthBuild program fits within the larger organization.

The applicant must fully describe the organization's capacity to track and report outcomes and its ability to collect and manage data in a way that allows consistent, accurate, and expedient reporting. The applicant must discuss the professional development activities available to staff, either on-site or through training funds.

The applicant must fully describe any previous experience of the organization in operating grants from either Federal or non-Federal sources. Describe the fiscal controls in place in the organization for auditing and accountability procedures. Applicant must also provide information on the overall financial stability of the organization that has financial oversight for this program. Applicants must include the most recent audited financial statements and, if applicable, the accompanying management letter. This attachment will not count towards your 20-page limit for either the technical proposal or attachments.

The applicant must describe the organization's ability to handle multiple funding streams with appropriate accounting systems in place.

The applicant must describe its proposed project management structure including, where appropriate, the identification of a proposed project manager, discussion of the proposed staffing pattern, and the qualifications and experience of key staff members or short job descriptions and their time commitment to the project.

Scoring under this criterion will be based on the extent to which applicants provide evidence of the following:

- The overall financial stability of the organization as demonstrated by strong accounting systems, fiscal controls, previous grants management, and the audited financial statements.
- The capacity of the applicant organization to accomplish the goals and outcomes of the project, including the ability to collect and manage data in a way that allows consistent, accurate, and expedient reporting.
- The time commitment of the proposed staff dedicated to the YouthBuild program is sufficient to ensure proper direction, management, and timely completion of the project.
- The roles and contribution of staff, consultants, and collaborative organizations are clearly defined and linked to specific tasks.
- The background, experience, and other qualifications of the staff are sufficient to carry out their designated roles.
- The adequacy of the budget and narrative to run the proposed program, including the cost per participant, which should not exceed the range of $15,000–$18,000.

ii. Evidence of Past Success in YouthBuild or Other Relevant Programs (20 Points)

The applicant must fully describe and document past accomplishments it has had operating a YouthBuild program or another youth workforce development program that is comparable to YouthBuild in its complexity and duration in the provision of education and skills training for at-risk youth, including skills training in housing rehabilitation and construction activities. If you have previously received a YouthBuild award from DOL, please include the quarterly performance numbers from the most recently submitted Quarterly Performance Report. The applicant must describe the program and how long the program has been in operation. Applicants that have operated a YouthBuild program or another comparable youth workforce development program must provide in a chart, which may be single-spaced, the following information:

- Program duration (*e.g.,* months participants are enrolled in the program);
- Number of youth recruited;
- Number of youth enrolled;
- Number of youth who successfully completed the program;
- Number and percent of youth receiving their GED, high school diploma, and/or other state recognized equivalent (including recognized alternative standards for individuals with disabilities; please differentiate between these credentials);
- Rate of literacy and numeracy gains by participants;
- Number and percent of youth who have entered construction-related employment;
- Number and percent of youth who have entered other employment;
- Employment retention rates;
- Number and percent of youth who have entered post-secondary training or education;
- Post-secondary training or education retention rates (where available, please indicate the number of participants who have completed post-

secondary training or education and have achieved a credential);

- Number and percent of youth who have entered registered apprenticeship programs; and
- Cost per participant.

The applicant must indicate the projected enrollment per year. Please fully describe how both the academic and skills training curricula were developed and how long they have been used. Please note that projected enrollment described in this section is not binding. At the time of grant award, DOL will inform grantees of expected enrollment goals as well as expected outcomes based on existing outcome data for a YouthBuild program or another comparable youth workforce development program. DOL reserves the right to set expected performance outcomes at a later date in the awards selection process.

Scoring under this criterion will be based on the extent to which applicants provide evidence of the following:

- The degree to which the performance data is provided and documented;
- The degree to which the organization has demonstrated success in working with at-risk youth and preparing them for employment or education;
- The complexity of construction activities undertaken and the degree to which youth are exposed and trained in a variety of construction skills;
- The use of occupational skills training curriculum that resulted in youth receiving industry-recognized credentials, e.g., the National Center for Construction Education and Research, the Home Builders Institute's curriculum, or the Building Trades Multi-Craft Core curriculum; and
- The use of State-approved curricula for either GED or high school diploma.

3. Project Design, Service Strategy, and Program Outcomes (40 Points Total).

i. How will youth be recruited and selected for the program? (5 Points)

The applicant must provide a description that fully demonstrates how eligible youth will be recruited and selected as participants, including a description of arrangements that will be made for the recruitment and selection of eligible youth with the following groups: Local Workforce Investment Boards, One-Stop Career Centers, faith-based and community organizations, State educational agencies or local educational agencies (including agencies of Indian tribes), public assistance agencies, the courts of jurisdiction, agencies operating shelters for homeless individuals, people with disabilities, and other agencies that serve youth who are homeless individuals, foster care agencies, and other appropriate public and private agencies. The applicant must provide a description that fully demonstrates the outreach efforts that will be undertaken to recruit eligible young women (including young women with dependent children) as participants. Scoring under this criterion will be based on the extent to which applicants provide evidence of the following:

- The quality and comprehensiveness of their recruitment strategy including methods for outreach, referral, and selection.
- The program's successful efforts to recruit eligible young women into the YouthBuild program or other comparable youth workforce development program.

ii. How will education and occupational skills training be delivered to youth as required by the YouthBuild Transfer Act in an integrated and cross-cutting manner? (20 Points)

The applicant must fully demonstrate how the academic program is integrated with the occupational skills training component of the program. The applicant must explain how academic and occupational skills training instructors work together to reinforce and complement classroom and workplace lessons and how other innovative teaching strategies are used in the program. Describe how the applied learning of the construction trades will improve and enhance the academic outcomes for the youth and provide examples of the integration of these two YouthBuild program components.

The applicant must provide a description that fully demonstrates the educational and job training activities, work opportunities, post-secondary education and training opportunities, and other services that will be provided to participants, and how those activities, opportunities, and services will prepare youth for employment in construction occupations in demand in the local labor market. Given the connection between education and earnings, DOL expects that the academic component will be rigorous and challenging and will provide youth with opportunities to transition to post-secondary training. The program must be structured so that participants in the program are offered education and related services designed to meet educational needs for at least 50 percent of the time during which they participate in the program. YouthBuild program participants must be offered work and skill development activities in housing rehabilitation and construction activities, for at least 40 percent of the time during which they participate in the program. The 50–40 time allocation applies at the program level and not to the actual time that an individual spends in a component.

The applicant must indicate the type of academic credential that participants will earn while in the program (GED, high school diploma or degree certificate, or other state recognized equivalent including recognized alternative standards for people with disabilities). The applicant must fully describe the quality of the academic program and the qualifications of the teaching staff. The applicant must fully describe any innovative and successful strategies that the program or initiative has used to address low basic skills of participants. The applicant must describe if and how the academic portion of your program differs from that of a traditional comprehensive high school. If distance learning and/or credit retrieval is used, please fully describe how this is incorporated into the overall academic program. The applicant must describe how student mastery is demonstrated.

The applicant must describe how it will link program participants to local community colleges and trade schools, particularly for YouthBuild programs that only offer GEDs to participants. Please also describe the types of college exploration, planning, preparation, and assistance that will be provided.

The applicant must discuss the occupational skills training component of the program, including where and how the training will be conducted, how the curriculum is developed, the type of industry-recognized credentials that result from the training, the inclusion of green construction skill training, and the involvement of industry partners and apprenticeship programs in the development of the training. Please describe the skills and qualifications of the occupational skills training instructors. Applicants must provide the worksite form ETA–9143 and all related attachments as part of their proposal. All information requested on the ETA–9143 and related attachments must be addressed in full in order to be considered responsive to this requirement. Please provide a description of the payment structure for participants.

The applicant must describe how it will oversee the worksite to identify existing and potential hazards, how youth will be trained to protect themselves from potential worksite accidents, and how hazards will be

prevented and controlled through policies and procedures. Provide information on how worksite supervisors will be trained to ensure OSHA-approved worksite safety. The applicant must indicate the ratio of adults to youth at construction training sites.

This section of the proposal will be rated on:

- The use of innovative and evidence-based instructional strategies to address basic skills deficiencies;
- The extent to which a challenging curriculum is provided;
- The extent to which project-based learning or other methods of integrating education and occupational skill training are used;
- The specific partnerships that create explicit links for participants to local community colleges and trade schools;
- The degree to which career and college exploration are incorporated into the overall culture of the program;
- The availability of industry-recognized credentials upon completion of the occupational skills training components of the program;
- The strength of connections to business partners and apprenticeship programs;
- The comprehensiveness of form ETA–9143 describing the worksite and access;
- The comprehensiveness of safety plans for the occupational skills training worksite, including the training of staff and participants in OSHA guidelines;
- The extent of green construction training that is included in the overall construction curriculum;
- The proposed time period during which educational programming will be offered (including when the programming will be offered and the amount of time that it will be offered);
- The proposed time period during which occupational skills training will be offered (including when the programming will be offered and the amount of time that it will be offered); and
- The quality of the integration of these two components.

iii. How will community service learning and leadership development opportunities be provided for youth in the program? (5 Points)

The applicant must describe the proposed leadership curriculum, qualifications of instructors, and the impact of the proposed leadership activities on the target area. The application must fully describe the leadership development training that will be offered to participants, the expected leadership competencies with which participants will graduate, youth committee involvement strategies, efforts for providing the training to build group cohesion and peer support, and opportunities for continued leadership after graduation. The applicant must describe how community service learning opportunities will be implemented at the site.

Applicants will be evaluated on:

- The quality of leadership development and community service learning activities; and
- How these activities are integrated with academic, skills training, and career exploration components of the program.

iv. What types of post-program transition services will be provided and how will follow-up for outcome reporting and participant retention be assured? (10 Points)

Post-program transition services are defined as services offered during program enrollment that will assist a young person in making a successful transition from the YouthBuild program into employment and/or post-secondary education and training programs. Follow-up services are services that may be provided to a YouthBuild program participant upon exit from the program. Please fully describe the types of post-program transition services that will be offered to prepare youth for career pathway opportunities and placements and/or educational opportunities and placements. The applicant must describe how each individual's work readiness will be assessed and how work readiness training will be provided. Also describe how an individual's readiness for placement in post-secondary education and/or apprenticeship programs will be assessed. The applicant must demonstrate the types of career exploration and planning activities that will be offered by the program, particularly for high-growth, high-demand, and high-wage occupations. For a list of ETA's or the Department's Targeted High-Growth Industries, go to: *http://www.doleta.gov/brg/jobtraininitiative/#TargetedIndustries.*

The applicant must describe the program's job placement and retention strategy, including how the program will work with employers and/or One-Stop Career Centers to identify and create job openings for the young people served by the program. Describe the types of follow-up services that will be provided to support youth as they transition to post-secondary education or employment and ensure that they are retained in placements. Describe how appropriate continued support services will be provided during the nine to twelve month follow-up period.

Important elements for evaluation include:

- The degree to which work readiness and career exploration are integrated into the culture, core mission, and activities of the program;
- The program's integrated approach to providing post-program planning for participants; and
- The structure of its participant follow-up service strategy.

4. Linkages to Key Partners, Match and Leveraged Resources (15 Points Total)

i. Who are the key partners that will be supporting the program? (10 Points)

The applicant must describe the key partners who will be involved in the proposed YouthBuild project. Specifically, describe in detail the activities to be undertaken by partners, the level of commitment from each partnering organization, and their qualifications to assist with this project. As an attachment, the applicant must include letters of commitment from key partners that demonstrate the strength and maturity of the partnership, including previous collaboration on projects. Please note that letters of support do not equate to letters of commitment and should not be included.

The applicant must provide a description of how the proposed program will coordinate with Federal, State, and local agencies and Indian tribes to access services, including local workforce investment activities with One-Stop Career Centers and their cooperating partners, vocational education programs, faith-based organizations, limited English proficiency instruction programs, and activities conducted by public schools, community colleges, and national service programs, as well as other job training provided with funds available under this title.

The applicant must describe partnerships with the juvenile justice system, adult probation/parole agencies, and housing and community development systems. The applicant must fully describe the specific role of employers in the proposed program, such as their role in developing the proposed program and assisting in service provision and in placement activities. The applicant must fully describe the program's relationship with local building trade unions and their role in training, the relationship of the proposed program to established

registered apprenticeship programs and employers, and the ability of the applicant to grant industry-recognized skills certifications through the program.

The applicant must indicate the types of private funding the organization has secured in the past. Also, fully describe long-term partnerships with organizations that have added to the robustness of the program and how the organization has sustained these partnerships. The applicant must discuss how they have successfully managed partnerships.

Points for this factor will be awarded based on:

• The commitment of additional resources to the proposed program (in addition to the funds made available through the grant) by:

(1) An applicant;

(2) Recipients of other Federal, State, or local housing and community development assistance who will sponsor any part of the rehabilitation, construction, operation and maintenance, or other housing and community development activities undertaken as part of the proposed program; or

(3) Entities carrying out other Federal, State, or local activities or activities conducted by Indian tribes, including vocational education programs, adult and language instruction educational programs, and job training using funds provided under WIA.

• An applicant's ability to attract as partners in the proposed program:

(1) Education and training providers including:

(i) The kindergarten through twelfth grade educational system;

(ii) Adult education;

(iii) Community and technical colleges;

(iv) Four-year colleges and universities;

(v) Registered apprenticeship programs; and

(vi) Other training entities.

(2) Employers, including professional organizations and associations. An applicant will be evaluated on the extent to which employers participate in:

(i) Defining the program strategy and goals;

(ii) Identifying needed skills and competencies;

(iii) Designing training approaches and curricula;

(iv) Contributing financial support; and

(v) Hiring qualified YouthBuild graduates.

(3) The workforce investment system which may include:

(i) State and local workforce investment boards;

(ii) State workforce agencies; and

(iii) One-Stop Career Centers and their cooperating partners.

(4) The juvenile justice system, and the extent to which it provides:

(i) Support and guidance for YouthBuild participants with court involvement; and

(ii) Assists in the reporting of recidivism rates among YouthBuild participants.

(5) Faith-based and community organizations that serve at-risk and disadvantaged youth, and the extent to which they provide a variety of grant services such as:

(i) Case management;

(ii) Mentoring;

(iii) English as a Second Language courses; and

(iv) Other comprehensive supportive services, when appropriate.

(6) Local building trade unions and established registered apprenticeship programs and the extent to which they play a role in training, developing curricula, and providing post-program opportunities for employment or entry into training programs.

(7) Housing authorities, where appropriate, and how they are engaged in the YouthBuild program including, the recruitment of potential participants, the provision of worksites for participant training, office or training space, staff, and any other resources that they may be providing to the YouthBuild program;

• The partners' knowledge and experience about the proposed grant activities and their ability to impact the success of the project;

• Evidence, including letters of commitment (not letters of support), that key partners have expressed a clear dedication to the project and understand their areas of responsibility; and

• Evidence of the demonstrated ability of the applicant to successfully manage partnerships.

ii. What match and other leveraged resources are being contributed to this project? (5 Points)

Applicants should clearly describe the required matching funds (not to exceed 25 percent and any additional funds or resources leveraged in support of the proposed strategies and demonstrate how these funds contribute to the goals of the project. Important elements of the explanation include:

• Which partners and/or grant sub-recipients have or will contribute(d) match and leveraged resources and the extent of each contribution, including an itemized description of each contribution;

• The quality of the match and leveraged resources, including the extent to which each contribution will be used to further the goals of the project; and

• Evidence, such as letters of commitment (not letters of support), that key partners have expressed a clear commitment to provide the contribution.

Assessment of this criterion will be based on the extent to which the applicant fully describes the amount, commitment, nature, and quality of match and leveraged resources. A match in the sum of exactly 25 percent of the Federal funding request must be provided. Matching funds may be either cash or in-kind. Application will also be evaluated on the extent to which additional Federal, State, local, or private funding is provided for wraparound support services as well as to support the costs associated with their defined construction project. Both matching funds and additional leveraged resources will be scored based on the degree to which the source and use of those resources are clearly explained and the extent to which all resources are fully integrated into the project to support grant outcomes. Proposing a match amount in excess of the required 25 percent will NOT result in additional points and may have a negative impact on the overall evaluation.

B. Review and Selection Process

Applications for grants under this Solicitation will be accepted after the publication of this announcement and until the closing date. Proposals that are timely and responsive to the requirements of this SGA will be rated against the criteria listed above by an independent panel comprised of representatives from DOL, HUD, U.S. Department of Justice, U.S. Department of Health and Human Services, and other peers. The ranked scores will serve as the primary basis for selection of applications for funding, in conjunction with other factors such as urban, rural, and geographic balance; whether the areas to be served have previously received grants for YouthBuild programs; the availability of funds; and which proposals are most advantageous to the Department. The approximately $30 million that remains of FY 2010 funds will be reserved for awards to organizations that did not receive funding in the FY 2009 YouthBuild competition [SGA/DFA PY 08–07].

If an applicant that did not receive funding in the FY 2009 YouthBuild competition [SGA/DFA PY 08–07] does not receive an award from the approximately $30 million of FY 2010 funds, their application will automatically be considered for award from the FY 2011 appropriation.

The panel results are advisory in nature and not binding on the Grant Officer, who may consider any information that comes to his/her attention. The Department may elect to award the grant(s) with or without discussions with the applicants. Should a grant be awarded without discussions, the award will be based on the applicant's signature on the SF–424, which constitutes a binding offer by the applicant (including electronic signature via E–Authentication on *http://www.grants.gov*).

VI. Award Administration Information

A. Award Notices

All award notifications will be posted on the ETA homepage (*http://www.doleta.gov*). Applicants selected for award will be contacted directly before the grant's execution. Applicants not selected for award will be notified by mail. All applicants will be given the opportunity to request written feedback based on the technical panel review.

As part of the grant package and before any drawdown, all successful grantees will be required to re-confirm access to their proposed worksite. In addition, a revised worksite plan will be required before funds can be drawn down for the second year of the grant.

B. Administrative and National Policy Requirements

1. Administrative Program Requirements

All grantees will be subject to all applicable Federal laws, regulations, and the applicable OMB Circulars. The grant(s) awarded under this SGA will be subject to the following administrative standards and provisions:

i. Non-Profit Organizations—OMB Circular A–122 (Cost Principles), relocated to 2 CFR part 230, and 29 CFR part 95 (Administrative Requirements).

ii. Educational Institutions—OMB Circular A–21 (Cost Principles), relocated to 2 CFR part 220, and 29 CFR part 95 (Administrative Requirements).

iii. State, Local, and Indian Tribal Governments—OMB Circular A–87 (Cost Principles), relocated to 2 CFR part 225, and 29 CFR part 97 (Administrative Requirements).

iv. Profit Making Commercial Firms—Federal Acquisition Regulation (FAR)—48 CFR part 31 (Cost Principles), and 29 CFR part 95 (Administrative Requirements).

v. The Workforce Investment Act of 1998, Public Law 105–220, 112 Stat. 936 (codified, as amended, at 29 U.S.C. 2801 *et seq.*) and 20 CFR part 667 (General Fiscal and Administrative Rules);

vi. 29 CFR Part 37—Implementation of the Nondiscrimination and Equal Opportunity Provisions of the Workforce Investment Act of 1998;

vii. All entities must comply with 29 CFR parts 93 (New Restrictions on Lobbying), 29 CFR part 94 (Governmentwide Requirements for Drug-Free Workplace (Financial Assistance)), and 29 CFR part 98 (Governmentwide Debarment and Suspension), and, where applicable, 29 CFR part 96 (Audit Requirements for Grants, Contracts, and Other Agreements) and 29 CFR Part 99 (Audits of States, Local Governments and Non-Profit Organizations).

ix. 29 CFR part 2, subpart D—Equal Treatment in Department of Labor Programs for Religious Organizations, Protection of Religious Liberty of Department of Labor Social Service Providers and Beneficiaries.

x. 29 CFR part 31—Nondiscrimination in Federally Assisted Programs of the Department of Labor—Effectuation of Title VI of the Civil Rights Act of 1964.

xi. 29 CFR part 32—Nondiscrimination on the Basis of Handicap in Programs and Activities Receiving or Benefiting from Federal Financial Assistance.

xii. 29 CFR part 33—Enforcement of Nondiscrimination on the Basis of Handicap in Programs or Activities Conducted by the Department of Labor.

xiii. 29 CFR part 35—Nondiscrimination on the Basis of Age in Programs or Activities Receiving Federal Financial Assistance from the Department of Labor.

xiv. 29 CFR part 36—Nondiscrimination on the Basis of Sex in Education Programs or Activities Receiving Federal Financial Assistance.

The following administrative standards and provisions also may be applicable:

i. The YouthBuild Transfer Act, Public Law 109–281, 120 Stat 1173 (codified at 29 U.S.C. 2918a);

ii. 29 CFR parts 29 and 30—Labor Standards for the Registration of Apprenticeship Programs and Equal Employment Opportunity in Apprenticeship and Training;

iii. 29 CFR part 570—Child Labor Regulations, Orders, and Statements of Interpretation;

iv. The Davis-Bacon Act, as amended, 40 U.S.C. 3141 *et seq.* and 29 CFR part 5—Labor Standards Provisions Applicable to Contracts Covering Federally Financed and Assisted Construction;

v. Health and Safety Standards established under Federal and State Law (including the Occupational Safety and Health Act of 1970) otherwise applicable to working conditions of employees are equally applicable to working conditions of participants engaged in the activities funded by this grant. *See* 29 U.S.C. 2931(b)(4); and

vi. Environmental protection statutes and regulations as applicable.

In accordance with Section 18 of the Lobbying Disclosure Act of 1995 (Pub. L. 104–65) (2 U.S.C. 1611) non-profit entities incorporated under Internal Revenue Service Code section 501(c)(4) that engage in lobbying activities are not eligible to receive Federal funds and grants.

Other Administrative Standards and Provisions:

Except as specifically provided in this Notice, DOL/ETA's acceptance of a proposal and an award of Federal funds to sponsor any program(s) does not provide a waiver of any grant requirements and/or procedures. For example, OMB Circulars require that an entity's procurement procedures must ensure that all procurement transactions are conducted, as much as practical, to provide open and free competition. If a proposal identifies a specific entity to provide services, the DOL/ETA's award does not provide the justification or basis to sole source the procurement, *i.e.,* avoid competition, unless the activity is regarded as the primary work of an official partner to the application.

Further, as a Federal agency, DOL has a statutory duty to affirmatively further fair housing. DOL requires the same of its funding recipients under this solicitation. If the organization is a successful applicant, the organization will have a duty to affirmatively further fair housing opportunities for classes protected under the Fair Housing Act. Protected classes include race, color, national origin, religion, sex, disability, and familial status. Therefore, the grantee must take specific steps to:

- Overcome the effects of impediments to fair housing choice that were identified in the jurisdiction's Analysis of Impediments (AI) to Fair Housing Choice;
- Remedy discrimination in housing; or
- Promote fair housing rights and fair housing choice.

Further, the applicant has a duty to carry out the specific activities provided in its responses to this solicitation that

address affirmatively furthering fair housing.

2. Special Program Requirements

i. Evaluation of YouthBuild Program.

To measure the impact of the YouthBuild programs, DOL has arranged for an independent evaluation of the outcomes and benefits of the projects. ETA has contracted with an independent organization to conduct a rigorous, national evaluation of the YouthBuild program. A subset of grantees will be selected to participate in the evaluation and those that are selected will be required to participate.

The evaluation will use a random assignment design, which includes a computerized process that will randomly select which of the youth that grantees deem eligible for the program will receive YouthBuild services. This process, similar to drawing names from a hat, is fair and ensures that everyone has the same chance of getting YouthBuild services. Those who are not admitted will form a control group and may be referred to other non-similar youth services. The grantees will be responsible for obtaining the consent of applicants to be randomly selected to be in the control group, and for informing the applicants that they have been selected. The evaluation contractor will work with each grantee to develop study procedures that minimize any disruption of the grantee's intake procedures and program operations. It is expected that the evaluation will not reduce the total number of youth who are served by the YouthBuild program. For more information on the evaluation, please see the Q & A section of this solicitation.

C. Reporting

Grantees must agree to meet DOL reporting requirements. Quarterly financial reports, quarterly progress reports, and MIS data will be submitted by the grantee electronically. The grantee is required to provide the reports and documents listed below:

1. Quarterly Financial Reports

A Quarterly Financial Status Report (ETA 9130) is required until such time as all funds have been expended or the grant period has expired. Quarterly reports are due 45 days after the end of each program year quarter. Grantees must use DOL's On-Line Electronic Reporting System about which information and instructions will be provided to grantees.

2. Quarterly Narrative Progress Reports

The grantee must submit a quarterly progress report to their designated Federal Project Officer within 45 days after the end of each quarter. This report must provide a detailed account of activities undertaken during that quarter. The quarterly progress report should be in narrative form and should include:

i. In-depth information on accomplishments, including project success stories, upcoming grant activities, and promising approaches and processes.

ii. Progress toward performance outcomes, including updates on product, curricula, and training development.

3. Quarterly Performance Reports

Organizations will be required to submit updated data on enrollment, services provided, placements, outcomes, and follow-up status within 45 days after the end of each quarter. A government-procured, Web-based Case Management and Performance system will be provided at no charge to all grantees. Grantees will be required to have industry-standard computer hardware and high-speed Internet access in order to use the MIS system. Grant funds may be used with the prior approval of the Grant Officer to upgrade computer hardware and Internet access to enable projects to use the MIS system.

4. Injury Incident Reports

Organizations will be required to submit incident reports of injuries received by enrollees during the training program. DOL will provide specifications for this reporting after grant award.

5. Final Report

A final report must be submitted no later than 90 days after the expiration date of the grant. This report must summarize project activities, employment outcomes, and related results of the training project, and should thoroughly document capacity building and training approaches. The final report should also include copies of all deliverables, *e.g.* curricula and competency models. Three copies of the final report must be submitted to ETA, and grantees must agree to use a designated format specified by DOL for preparing the final report.

6. A Closeout Financial Status Report Is Due 90 Days After the End of the Grant Period.

7. Record Retention

Applicants should be aware of Federal guidelines on record retention, which require grantees to maintain all records pertaining to grant activities for a period of not less than 3 years from the time of final grant close-out.

VII. Agency Contacts

For further information about this SGA, please contact Ariam Ferro, Grants Management Specialist, Division of Federal Assistance, at (202) 693–3968 (please note this is not a toll-free number). Applicants should fax all technical questions to (202) 693–2705 and must specifically address the fax to the attention of Ariam Ferro and should include SGA/DFA PY 10–02, a contact name, fax and phone number, and e-mail address. This announcement is being made available on the ETA Web site at *http://www.doleta.gov/grants/find_grants.cfm,* at *http://www.grants.gov,* and in the **Federal Register**.

VIII. Additional Resources of Interest to Applicants

A. Web-Based Resources

DOL maintains a number of Web-based resources that may be of assistance to applicants:

- The Web site for ETA (*http://www.doleta.gov*) is a valuable source for background information on the High Growth Job Training Initiative.
- The Workforce3One Web site (*http://www.workforce3one.org*) is a valuable resource for information about demand-driven projects of the workforce investment system, educators, employers, and economic development representatives.
- America's Service Locator (*http://www.servicelocator.org*) provides a directory of the nation's One-Stop Career Centers.
- We encourage applicants to review "Applying for ETA Competitive Grants: A Web-Based Toolkit for Prospective Applicants" (*http://www.workforce3one.org/page/grants_toolkit*).
- For an understanding of the Department's Equal Treatment and Religion-Related regulations and the responsibilities of receiving Federal grant support, please see "Transforming Partnerships: How to Apply the U.S. Department of Labor's Equal Treatment and Religion-Related Regulations to Public-Private Partnerships" at: *http://www.workforce3one.org/view/5566/info.*
- TRAINING AND EMPLOYMENT NOTICE NO. 44–07 "Providing Strategies to the One-Stop Career Center System on Collaborating with YouthBuild Programs" can be found at *http://wdr.doleta.gov/directives/corr_doc.cfm?DOCN=2646.*

IX. Other Information

OMB Information Collection No. 1225–0086

OMB Information Collection No. 1225–0086, Expires November 30, 2012

According to the Paperwork Reduction Act of 1995, no persons are required to respond to a collection of information unless such collection displays a valid OMB control number. Public reporting burden for this collection of information is estimated to average 20 hours per response, including time for reviewing instructions, searching existing data sources, gathering and maintaining the data needed, and completing and reviewing the collection of information. Send comments regarding the burden estimated or any other aspect of this collection of information, including suggestions for reducing this burden, to the U.S. Department of Labor, to the attention of: Departmental Clearance Officer, 200 Constitution Avenue, NW., Room N–1310, Washington, DC 20210. Comments may also be e-mailed to *DOL_PRA_PUBLIC@dol.gov.* Please do not return the completed application to this address. Send it to the sponsoring agency as specified in this solicitation.

This information is being collected for the purpose of awarding a grant. The information collected through this "Solicitation for Grant Applications" will be used by DOL to ensure that grants are awarded to the applicant best suited to perform the functions of the grant. Submission of this information is required in order for the applicant to be considered for award of this grant. Unless otherwise specifically noted in this announcement, information submitted in the respondent's application is *not* considered to be confidential.

Signed at Washington, DC, this 28th day of September 2010.

Donna Kelly,

Grant Officer, Employment and Training Administration.

[FR Doc. 2010–24825 Filed 10–1–10; 8:45 am]

BILLING CODE 4510–FT–P

MILLENNIUM CHALLENGE CORPORATION

[MCC FR 10–11]

Notice of Entering Into a Compact With the Republic of the Philippines

AGENCY: Millennium Challenge Corporation.

ACTION: Notice.

SUMMARY: In accordance with Section 610(b)(2) of the Millennium Challenge Act of 2003 (Pub. L. 108–199, Division D), the Millennium Challenge Corporation (MCC) is publishing a summary and the complete text of the Millennium Challenge Compact between the United States of America, acting through the Millennium Challenge Corporation, and the Republic of the Philippines. Representatives of the United States Government and the Republic of the Philippines executed the Compact documents on September 23, 2010.

Dated: September 29, 2010.

Melvin F. Williams, Jr.,

VP/General Counsel and Corporate Secretary, Millennium Challenge Corporation.

Summary of Millennium Challenge Compact With the Republic of the Philippines

The five-year Millennium Challenge Compact with the Republic of the Philippines ("Compact") will provide up to $433,910,000 million to reduce poverty and accelerate economic growth. The Compact is intended to support: (i) Reforms and investments to modernize the Bureau of Internal Revenue to increase fiscal space for public investment and to reduce opportunities for corruption in tax administration; (ii) expansion and improvement of a community-driven development project, Kalahi-CIDSS; and (iii) rehabilitation of a secondary national road in Samar province.

Revenue Administration Reform Project ($54.3 million)

The Revenue Administration Reform Project addresses two problems: (i) the need to raise tax revenues and (ii) the need to reduce tax evasion and revenue agent-related corruption. A key constraint to economic growth in the Philippines is the lack of fiscal space for growth-enhancing investments in public goods such as infrastructure and social services *(e.g.,* education and health). This project will focus on the Bureau of Internal Revenue within the Department of Finance to increase the efficiency and sustainability of revenue collection through a redesign and computerization of business processes, thereby helping to relieve some pressure on the Government of the Republic of the Philippines' ("GRP's") fiscal position. This project will narrow the gap between potential and actual collections by reducing the discretion of individual revenue *(i.e.,* tax and customs) collection officers, and help improve the predictability and impartiality with which revenue laws and regulations are enforced. Some of these activities are extensions of the Philippines' threshold program activities that concluded in May 2009. The project is expected to reach the entire Philippine population and has an economic rate of return of 40 percent.

Kalahi-CIDSS Community Development Project ($120.0 million)

The Kalahi-CIDSS Project will improve welfare in rural areas by targeting communities where poverty incidence exceeds the national average for small-scale, community-driven development projects. The project does this through the direct provision of infrastructure and services associated with community-selected and managed sub-projects, strengthened community participation in development and governance activities at the village and municipal level, and improved responsiveness of local government to community needs. The project will build on and support the application of the participatory planning, implementation, and evaluation methodology developed by GRP's Department of Social Welfare and Development (DSWD) in collaboration with the World Bank.

Grants for the community sub-projects are provided directly to the local communities, which are responsible for sub-project selection, the procurement of goods and services for their sub-project, and, in most cases, the operations and maintenance of the physical assets. DSWD will implement the project, overseen by a National Steering Committee that includes representatives from government departments and NGOs, and in collaboration with local governments.

Typical sub-projects will include small-scale transportation infrastructure such as village access roads and bridges, school buildings, health clinics, drinking water systems, pre-and post-harvest facilities, and other economic assets. The project is expected to benefit over five million beneficiaries over the next 20 years and has an estimated economic rate of return of 13 percent.

Secondary National Roads Development Project ($214.4 million)

The Secondary National Roads Development Project is designed to reduce transportation costs through the rehabilitation of an existing 222 kilometer road segment. By bringing about savings in vehicle operating cost and time for both passengers and goods, and by reducing road maintenance costs, the investment will facilitate increased commerce in and between the provinces of Samar and Eastern Samar,

and ultimately contribute to the Compact's objective of increasing incomes.

This project will incorporate enhanced safety measures in the final road designs, including: (i) Paved shoulders intended to improve conditions for vehicles and provide space for pedestrians; (ii) construction of sidewalks and curbs where pedestrian activity is higher, such as near schools and other public facilities; (iii) improved gateway treatments to indicate where lower speeds are required, typically in more developed communities and urban areas; and (iv) increased use of road narrowing, median islands, and traffic humps to slow traffic speeds. The project is expected to reach 290,000 beneficiaries and has an economic rate of return of 14 percent.

Administration

The Compact also includes program management and oversight costs estimated at $36.91 million over a five-year time frame, including the costs of administration, management, auditing, and fiscal and procurement agent services. In addition, the cost of monitoring and evaluation of the Compact is budgeted at approximately $8.26 million.

Millennium Challenge Compact

Between the United States of America Acting Through the Millennium Challenge Corporation and the Republic of the Philippines

Table of Contents

Article 1. Goal and Objectives
Section 1.1 Compact Goal
Section 1.2 Program Objective
Section 1.3 Project Objectives
Article 2. Funding and Resources
Section 2.1 Program Funding
Section 2.2 Compact Implementation Funding
Section 2.3 MCC Funding
Section 2.4 Disbursement
Section 2.5 Interest
Section 2.6 Government Resources; Budget
Section 2.7 Limitations of the Use of MCC Funding
Section 2.8 Taxes and Contributions
Article 3. Implementation
Section 3.1 Program Implementation Agreement
Section 3.2 Government Responsibilities
Section 3.3 Policy Performance
Section 3.4 Government Assurances
Section 3.5 Implementation Letters
Section 3.6 Procurement
Section 3.7 Records; Accounting; Covered Providers; Access
Section 3.8 Audits; Reviews
Article 4. Communications
Section 4.1 Communications
Section 4.2 Representatives
Article 5. Termination; Suspension; Refunds
Section 5.1 Termination; Suspension
Section 5.2 Refunds; Violation
Section 5.3 Survival
Article 6. Compact Annexes; Amendments; Governing Law
Section 6.1 Annexes
Section 6.2 Amendments
Section 6.3 Inconsistencies
Section 6.4 Governing Law
Section 6.5 Additional Instruments
Section 6.6 References to MCC Web site
Section 6.7 References to Laws, Regulations, Policies, and Guidelines
Section 6.8 MCC Status
Section 6.9 Counterparts; Electronic Delivery
Article 7. Entry Into Force
Section 7.1 Conditions Precedent to Entry Into Force
Section 7.2 Date of Entry Into Force
Section 7.3 Compact Term
Section 7.4 Provisional Application
Article 8. Additional Government Covenants
Section 8.1 Project Covenants
Annex I: Program Description
Annex II: Multi-Year Financial Plan Summary
Annex III: Description of the Monitoring and Evaluation Plan
Annex IV: Conditions to Disbursement of Compact Implementation Funding
Annex V: Definitions

Millennium Challenge Compact

Preamble

This Millennium Challenge Compact (this "*Compact*") is between the United States of America, acting through the Millennium Challenge Corporation, a United States government corporation ("*MCC*"), and the Republic of the Philippines ("the *Philippines*"), acting through its government (the "*Government*"), represented by its Department of Finance.

MCC and the Government are individually referred to in this Compact as a "*Party*" and together, as the "*Parties*." Capitalized terms used in this Compact will have the meanings specified in Annex V hereto.

Recalling that the Government consulted with the private sector and civil society of the Philippines to determine the priorities for the use of Millennium Challenge Account assistance and developed and submitted to MCC a proposal for such assistance to achieve lasting economic growth and poverty reduction; and

Recognizing that MCC wishes to help the Philippines implement a program to achieve the goal and objectives described herein (the "*Program*").

The Parties agree as follows:

Article 1. Goal and Objectives

Section 1.1 Compact Goal

The goal of this Compact is to reduce poverty through economic growth in the Philippines (the "*Compact Goal*").

Section 1.2 Program Objective

The objective of the Program is to: (a) Increase the incomes of Filipinos through the benefits of community-driven sub-projects; (b) obtain time savings and lower transportation costs for road users in Program areas; and (c) increase investment and government expenditure due to an increase in tax revenue and a reduction in corruption (as further described in Annex I, the "*Program Objective*").

Section 1.3 Project Objectives

The objectives of the Projects (as further described in Annex I) (each a "*Project Objective*" and collectively, the "*Project Objectives*") are as follows:

(a) The objectives of the KALAHI–CIDSS Project (as defined in Annex I) are to: (i) Improve the responsiveness of local governments to community needs; (ii) encourage communities to engage in development activities; and (iii) deliver benefits to *barangay* residents through individual sub-projects.

(b) The objectives of the Secondary National Roads Development Project (as defined in Annex I) are to: (i) save time; and (ii) lower vehicle operating costs for those Filipinos living near the roads.

(c) The objectives of the Revenue Administration Reform Project (as defined in Annex I) are to: (i) increase tax revenues over time; and (ii) support the Department of Finance's initiatives to detect and deter corruption within its revenue agencies.

Article 2. Funding and Resources

Section 2.1 Program Funding

Upon entry into force of this Compact, MCC will grant to the Government, under the terms of this Compact, an amount not to exceed Four Hundred Eight Million Eight Hundred Fifty Thousand United States Dollars (U.S. $408,850,000) to support the Program ("*Program Funding*"). The allocation of Program Funding is generally described in Annex II to this Compact.

Section 2.2 Compact Implementation Funding

(a) Upon signature of this Compact, MCC hereby grants to the Government, under the terms of this Compact, in addition to the Program Funding described in Section 2.1, an amount not to exceed Twenty-Five Million Sixty Thousand United States Dollars (U.S. $25,060,000) ("*Compact Implementation Funding*") under Section 609(g) of the Millennium Challenge Act of 2003, as amended (the "*MCA Act*"), for use by the Government as agreed by the Parties, which may include use for the following purposes:

(i) Project management activities for the KALAHI–CIDSS Project;

(ii) Procurement and establishment of a project management company for the Secondary National Roads Development Project; and

(iii) Technical assistance for advisory services for the Revenue Administration Reform Project.

The allocation of Compact Implementation Funding is generally described in Annex II to this Compact.

(b) In accordance with Section 7.4 of this Compact, this Section 2.2 and other provisions of this Compact necessary to make use of Compact Implementation Funding for the purposes set forth herein, will be effective, for purposes of Compact Implementation Funding only, as of the date this Compact is signed by MCC and the Government.

(c) Each Disbursement of Compact Implementation Funding is subject to satisfaction of the conditions to such Disbursement as set forth in Annex IV.

(d) If, after the first anniversary of this Compact entering into force, MCC determines that the full amount of Compact Implementation Funding under Section 2.2(a) of this Compact exceeds the amount which reasonably can be utilized for the purposes and uses set forth in Section 2.2(a) of this Compact, MCC, by written notice to the Government, may withdraw the excess amount, thereby reducing the amount of the Compact Implementation Funding as set forth in Section 2.2(a) (such excess, the "*Excess CIF Amount*"). In such event, the amount of Compact Implementation Funding granted to the Government under Section 2.2(a) will be reduced by the Excess CIF Amount, and MCC will have no further obligations with respect to such Excess CIF Amount.

(e) MCC, at its option by written notice to the Government, may elect to grant to the Government an amount equal to all or a portion of such Excess CIF Amount as an increase in the Program Funding, and such additional Program Funding will be subject to the terms and conditions of this Compact and any relevant supplemental agreement applicable to Program Funding.

Section 2.3 MCC Funding

Program Funding and Compact Implementation Funding are collectively referred to in this Compact as "*MCC Funding.*"

Section 2.4 Disbursement

In accordance with this Compact and the Program Implementation Agreement, MCC will disburse MCC Funding for expenditures incurred in furtherance of the Program (each instance, a "*Disbursement*"). Subject to the satisfaction of all applicable conditions, the proceeds of such Disbursements will be made available to the Government, at MCC's sole election, by (a) deposit to one or more bank accounts established by the Government through MCA-Philippines and acceptable to MCC (each, a "*Permitted Account*") or (b) direct payment to the relevant provider of goods, works or services for the implementation of the Program. MCC Funding may be expended only to fund Program expenditures as provided in this Compact and the Program Implementation Agreement.

Section 2.5 Interest

Except as otherwise agreed by MCC, the Government will transfer to MCC any interest or other earnings that accrue on MCC Funding (whether by directing such payments to a bank account outside the Philippines that MCC may from time to time indicate or as otherwise directed by MCC).

Section 2.6 Government Resources; Budget

(a) The Government will provide all funds and other resources, and will take all actions, that are necessary to carry out the Government's responsibilities and obligations under this Compact.

(b) The Government will provide suitable and adequate office space for MCA-Philippines, the Fiscal Agent, the Procurement Agent, and the MCC resident country mission.

(c) The Government will ensure that all MCC Funding it receives or is projected to receive in each of its fiscal years is fully accounted for in its annual budget on a multi-year basis.

(d) The Government will not reduce the normal and expected resources that it would otherwise receive or budget from sources other than MCC for the activities contemplated under this Compact and the Program.

(e) Unless the Government discloses otherwise to MCC in writing, MCC Funding will be in addition to the resources that the Government would otherwise receive or budget for the activities contemplated under this Compact and the Program.

(f) Without limitation of its obligations under Section 2.6(a) above, the Government shall: (i) Contribute funding to MCA-Philippines as described in Section 16 of the Establishment Decree and in compliance with Section 2.13 of the Program Implementation Agreement; and (ii) fund all costs in excess of those budgeted for the Program, as set forth in Annex II (as such may be modified in accordance with the terms thereof), in order to ensure the full and complete implementation of the Program.

Section 2.7 Limitations on the Use of MCC Funding

The Government will ensure that MCC Funding (or any refunds or reimbursements of MCC Funding paid by the Government in accordance with this Compact that MCC permits to be used in connection with the Program) will not be used for any purpose that would violate United States law or policy, as specified in this Compact or as further notified to the Government in writing or by posting from time to time on the MCC Web site at *www.mcc.gov* (the "*MCC Web site*"), including, but not limited to, the following purposes:

(a) For assistance to, or training of, the military, police, militia, national guard or other quasi-military organization or unit;

(b) For any activity that is likely to cause a substantial loss of United States jobs or a substantial displacement of United States production;

(c) To undertake, fund or otherwise support any activity that is likely to cause a significant environmental, health, or safety hazard, as further described in MCC's environmental and social guidelines posted from time to time on the MCC Web site or otherwise made available to the Government by MCC (the "*MCC Environmental Guidelines*"); or

(d) To pay for the performance of abortions as a method of family planning or to motivate or coerce any person to practice abortions, to pay for the performance of involuntary sterilizations as a method of family planning or to coerce or provide any financial incentive to any person to undergo sterilizations or to pay for any biomedical research which relates, in whole or in part, to methods of, or the performance of, abortions or involuntary sterilization as a means of family planning.

Section 2.8 Taxes and Contributions

The Government will ensure that no MCC Funding will be used for the payment of any existing or future taxes, customs duties, social security and other employment-related contributions, or other similar charges of the Government or any other governmental entity (national or sub-national, including of provinces, cities, municipalities, *barangays,* and other local governmental entities) in the Philippines ("*Taxes and Contributions*"), in accordance with

Section 2.4 of the Program Implementation Agreement.

Article 3. Implementation

Section 3.1 Program Implementation Agreement

Prior to entry into force of this Compact, the Government and MCC will enter into an agreement relating to, among other matters, implementation arrangements, fiscal accountability, and the disbursement and use of MCC Funding (the "*Program Implementation Agreement*" or "*PIA*"). The Government will implement the Program in accordance with the Compact and the PIA.

Section 3.2 Government Responsibilities

(a) The Government has principal responsibility for overseeing and managing the implementation of the Program.

(b) The Government hereby designates MCA-Philippines, an entity established through the issuance of Executive Order No. 849 of the Government (as amended, the "*Establishment Decree*"), as the accountable entity to implement the Program and to exercise and perform the Government's rights and responsibilities with respect to the oversight, management, and implementation of the Program, including, without limitation, managing the implementation of Projects and their Activities, allocating resources, and managing procurements. Such entity will be referred to herein as Millennium Challenge Account-Philippines ("*MCA-Philippines*"), and has the authority to bind the Government with regard to all Program Activities. The Establishment Decree will remain in form and substance satisfactory to MCC. For the avoidance of doubt, the designation of MCA-Philippines as set forth in this Section 3.2(b) will not relieve the Government of any of its obligations or responsibilities as set forth hereunder, under any related agreement (including, upon execution thereof, the PIA), or under the Program Guidelines, for which the Government remains fully responsible. MCC hereby acknowledges and consents to the designation in this Section 3.2(b).

(c) The Government will ensure that no law or regulation in the Philippines now or hereinafter in effect makes or will make unlawful or otherwise prevent or hinder the performance of any of the Government's obligations under this Compact, the PIA, or any other related agreement or any transaction contemplated hereby or thereby.

(d) The Government will ensure that any assets or services funded in whole or in part (directly or indirectly) by MCC Funding are used solely in furtherance of this Compact and the Program unless otherwise agreed by MCC in writing.

(e) The Government will take all necessary or appropriate steps to achieve the Program Objective and the Project Objectives during the Compact Term.

(f) The Government will fully comply with the Program Guidelines, as applicable, in its implementation of the Program.

Section 3.3 Policy Performance

In addition to undertaking the specific policy, legal, and regulatory reform commitments identified in Annex I (if any), the Government will seek to maintain and to improve its level of performance under the policy criteria identified in Section 607 of the MCA Act, and the selection criteria and methodology used by MCC.

Section 3.4 Government Assurances

The Government assures MCC that, as of the date this Compact is signed by the Government, the information provided to MCC by or on behalf of the Government in the course of reaching agreement with MCC on this Compact is true, correct and complete in all material respects.

Section 3.5 Implementation Letters

From time to time, MCC may provide guidance to the Government in writing on any matters relating to this Compact, MCC Funding, or implementation of the Program (each, an "*Implementation Letter*"). The Government will apply such guidance in implementing the Program. Without limiting the foregoing, either Party may, through its Principal Representative or any Additional Representative, as the case may be, initiate discussions that may result in a jointly agreed-upon Implementation Letter to confirm and record their mutual understanding on aspects related to the implementation of this Compact, the PIA, or other related agreements.

Section 3.6 Procurement

The Government will ensure that the procurement of all goods, works, and services by the Government, or any applicable provider providing goods, works, and services, to implement the Program will be consistent with the program procurement guidelines posted from time to time on the MCC Web site (the "*MCC Program Procurement Guidelines*"). The MCC Program Procurement Guidelines include, among others, the following requirements:

(a) Open, fair, and competitive procedures must be used in a transparent manner to solicit, award and administer contracts and to procure goods, works, and services;

(b) Solicitations for goods, works, and services must be based upon a clear and accurate description of the goods, works, and services to be acquired;

(c) Contracts must be awarded only to qualified contractors that have the capability and willingness to perform the contracts in accordance with their terms on a cost effective and timely basis;

(d) No more than a commercially reasonable price, as determined, for example, by a comparison of price quotations and market prices, will be paid to procure goods, works, and services; and

(e) Such procurement of goods, works, and services by the Government, or any applicable provider providing goods, works, and services, to implement the Program will not be subject to any domestic preference, local content, or local labor requirements.

Section 3.7 Records; Accounting; Covered Providers; Access

(a) Government Books and Records. The Government will maintain, and will use its best efforts to ensure that all Covered Providers maintain, accounting books, records, documents, and other evidence relating to the Program adequate to show, to MCC's satisfaction, the use of all MCC Funding ("*Compact Records*"). In addition, the Government will furnish or cause to be furnished to MCC, upon its request, all such Compact Records.

(b) Accounting. The Government will maintain, and will use its best efforts to ensure that all Covered Providers maintain, Compact Records in accordance with generally accepted accounting principles prevailing in the United States, or at the Government's option and with MCC's prior written approval, other accounting principles, such as those (i) prescribed by the International Accounting Standards Board, or (ii) then prevailing in the Philippines. Compact Records must be maintained for at least five (5) years after the end of the Compact Term or for such longer period, if any, required to resolve any litigation, claims or audit findings or any statutory requirements.

(c) Providers and Covered Providers. Unless the Parties agree otherwise in writing, a "*Provider*" is (i) any entity of the Government that receives or uses MCC Funding or any other Program Asset in carrying out activities in

furtherance of this Compact, or (ii) any third party that receives at least Fifty Thousand United Stated Dollars (US$50,000) in the aggregate of MCC Funding (other than as salary or compensation as an employee of an entity of the Government) during the Compact Term. A "*Covered Provider*" is (1) a non-United States Provider that receives (other than pursuant to a direct contract or agreement with MCC) Three Hundred Thousand United States Dollars (US$300,000) or more of MCC Funding in any Government fiscal year or any other non-United States person or entity that receives, directly or indirectly, Three Hundred Thousand United States Dollars (US$300,000) or more of MCC Funding from any Provider in such fiscal year, or (2) any United States Provider that receives (other than pursuant to a direct contract or agreement with MCC) Five Hundred Thousand United States Dollars (US$500,000) or more of MCC Funding in any Government fiscal year or any other United States person or entity that receives, directly or indirectly, Five Hundred Thousand United States Dollars (US$500,000) or more of MCC Funding from any Provider in such fiscal year.

(d) Access. Upon MCC's request, the Government, at all reasonable times, will permit, or cause to be permitted, authorized representatives of MCC, an authorized Inspector General, the United States Government Accountability Office, any auditor responsible for an audit contemplated herein or otherwise conducted in furtherance of this Compact, and any agents or representatives engaged by MCC or the Government to conduct any assessment, review, or evaluation of the Program, the opportunity to audit, review, evaluate, or inspect facilities and activities funded in whole or in part by MCC Funding.

Section 3.8 Audits; Reviews

(a) Government Audits. Except as the Parties may otherwise agree in writing, the Government will, on at least a semi-annual basis, conduct, or cause to be conducted, financial audits of all Disbursements of MCC Funding covering the period from signing of this Compact until the earlier of the following December 31 or June 30 and covering each six-month period thereafter ending December 31 and June 30, through the end of the Compact Term. In addition, upon MCC's request, the Government will ensure that such audits are conducted by an independent auditor approved by MCC and named on the list of local auditors approved by the Inspector General of MCC (the "*Inspector General*") or a United States-based certified public accounting firm selected in accordance with the "Guidelines for Financial Audits Contracted by MCA" (the "*Audit Guidelines*") issued and revised from time to time by the Inspector General, which are posted on the MCC Web site. Audits will be performed in accordance with the Audit Guidelines and be subject to quality assurance oversight by the Inspector General. Each audit must be completed and the audit report delivered to MCC no later than ninety (90) days after the first period to be audited and no later than ninety (90) days after each June 30 and December 31 thereafter, or such other period as the Parties may otherwise agree in writing.

(b) Audits of United States Entities. The Government will ensure that agreements between the Government or any Provider, on the one hand, and a United States nonprofit organization, on the other hand, that are financed with MCC Funding state that the United States nonprofit organization is subject to the applicable audit requirements contained in OMB Circular A–133, "Audits of States, Local Governments, and Non Profit Organizations," issued by the United States Government Office of Management and Budget. The Government will ensure that agreements between the Government or any Provider, on the one hand, and a United States for-profit Covered Provider, on the other hand, that are financed with MCC Funding state that the United States for-profit organization is subject to audit by the applicable United States Government agency, unless the Government and MCC agree otherwise in writing.

(c) Corrective Actions. The Government will (i) use its best efforts to ensure that Covered Providers take, where necessary, appropriate and timely corrective actions in response to audits, (ii) consider whether the results of a Covered Provider's audit necessitates adjustment of the Government's records, and (iii) require each such Covered Provider to permit independent auditors to have access to its records and financial statements as necessary.

(d) Audit by MCC. MCC will have the right to arrange for audits of the Government's use of MCC Funding.

(e) Cost of Audits, Reviews or Evaluations. MCC Funding may be used to fund the costs of any audits, reviews, or evaluations required under this Compact.

Article 4. Communications

Section 4.1 Communications

Any document or communication required or submitted by either Party to the other under this Compact must be in writing and, except as otherwise agreed with MCC, in English. For this purpose, the address of each Party is set forth below. The Government will provide to MCC any information that is missing from below.

To MCC:

Millennium Challenge Corporation, Attention: Vice President, Compact Operations, (in each case, with a copy to the Vice President and General Counsel), 875 Fifteenth Street, NW., Washington, DC 20005, United States of America, Facsimile: (202) 521–3700, Telephone: (202) 521–3600, e-mail: *VPOperations@mcc.gov* (Vice President, Compact Operations), *VPGeneralCounsel@mcc.gov* (Vice President and General Counsel).

To the Government:

Attention: Secretary of Finance, (in each case, with a copy to the Undersecretary for International Finance Group), Address: 6/F, DOF Building, Department of Finance, Bangko Sentral ng Pilipinas Complex, Roxas Boulevard, Manila 1004 Philippines, Facsimile: (632) 523–9495/(632) 523–9216, Telephone: (632) 523–9215/(632) 523–9911, e-mail: *mcccompact@dof.gov.ph.*

To MCA-Philippines:

Attention: Managing Director, Address: Room Nos. 602–604, 6/F EDPC Building, Bangko Sentral ng Pilipinas Complex, Roxas Boulevard, Manila 1004 Philippines, Contact details on the facsimile number, telephone number, and e-mail address will be provided in writing to MCC by MCA-Philippines

Section 4.2 Representatives

For all purposes of this Compact, the Government will be represented by the individual holding the position of, or acting as, the Secretary of Finance and MCC will be represented by the individual holding the position of, or acting as, Vice President, Compact Operations (each of the foregoing, a "*Principal Representative*"). Each Party, by written notice to the other Party, may designate one or more additional representatives (each, an "*Additional Representative*") for all purposes other than signing amendments to this Compact. The Government hereby irrevocably designates the Managing Director of MCA-Philippines as an Additional Representative. A Party may change its Principal Representative to a new representative that holds a position

of equal or higher rank upon written notice to the other Party.

Article 5. Termination; Suspension; Refunds

Section 5.1 Termination; Suspension

(a) Either Party may terminate this Compact without cause in whole by giving the other Party thirty (30) days written notice. MCC may also terminate this Compact without cause in part by giving the Government thirty (30) days written notice.

(b) MCC may, immediately, upon written notice to the Government, suspend or terminate this Compact or MCC Funding, in whole or in part, and any obligation related thereto, if MCC determines that any circumstance identified by MCC in writing to the Government as a basis for suspension or termination has occurred, which circumstances include, but are not limited, to the following:

(i) The Government fails to comply with its obligations under this Compact, the PIA, or any other agreement or arrangement entered into by the Government in connection with this Compact or the Program;

(ii) An event or series of events has occurred that MCC determines makes it probable that the Program Objective or any of the Project Objectives will not be achieved during the Compact Term or that the Government will not be able to perform its obligations under this Compact;

(iii) A use of MCC Funding or continued implementation of this Compact or the Program violates applicable law or United States Government policy, whether now or hereafter in effect;

(iv) The Government or any other person or entity receiving MCC Funding or using assets acquired in whole or in part with MCC Funding is engaged in activities that are contrary to the national security interests of the United States;

(v) An act has been committed or an omission or an event has occurred that would render the Philippines ineligible to receive United States economic assistance under Part I of the Foreign Assistance Act of 1961, as amended (22 U.S.C. 2151 *et seq.*), by reason of the application of any provision of the Foreign Assistance Act of 1961 or any other provision of law;

(vi) The Philippines is classified as a Tier 3 country in the United States Department of State's annual Trafficking in Persons Report;

(vii) The Government has engaged in a pattern of actions inconsistent with the criteria used to determine the eligibility of the Philippines for assistance under the MCA Act; or

(viii) The Government or another person or entity receiving MCC Funding or using assets acquired in whole or in part with MCC Funding is found to have been convicted of a narcotics offense or to have been engaged in drug trafficking.

(c) All Disbursements will cease upon expiration, suspension, or termination of this Compact; *provided, however,* MCC may permit MCC Funding to be used, in compliance with this Compact and the PIA, to pay for (i) expenditures for goods, works, or services that are properly incurred under or in furtherance of the Program before expiration, suspension, or termination of this Compact, and (ii) reasonable expenditures (including administrative expenses) properly incurred in connection with the winding up of the Program within one hundred twenty (120) days after the expiration, suspension, or termination of this Compact, so long as, with respect to (i) and (ii) herein, the request for such expenditures is submitted within ninety (90) days after such expiration, suspension, or termination.

(d) Subject to Section 5.1(c), upon the expiration, suspension, or termination of this Compact, (i) any amounts of MCC Funding not disbursed by MCC in accordance with the Compact and the PIA will be automatically released from any obligation in connection with this Compact, and (ii) any amounts of MCC Funding disbursed to the Permitted Account by MCC but not expended before the expiration, suspension or termination of this Compact, plus accrued interest thereon will be returned to MCC within thirty (30) days after the Government receives MCC's request for such return; *provided, however,* that if this Compact is suspended or terminated in part, MCC may request a refund for only the amount of MCC Funding allocated to the suspended or terminated portion. For the avoidance of doubt, interest will accrue from the date of the violation and will be calculated at the 10-year U.S. Treasury Note rate prevailing as of the close of business in Washington, DC as of the date of MCC's request for payment.

(e) MCC may reinstate any suspended or terminated MCC Funding under this Compact if MCC determines that the Government or other relevant person or entity has committed to correct each condition for which MCC Funding was suspended or terminated.

Section 5.2 Refunds; Violation

(a) If any MCC Funding, any interest or earnings thereon, or any asset acquired in whole or in part with MCC Funding is used for any purpose in violation of the terms of this Compact or the PIA, including, but not limited to, any violation of the Program Guidelines, then MCC may require the Government to repay to MCC in United States Dollars the value of the misused MCC Funding, interest, earnings, or asset, plus interest within thirty (30) days after the Government's receipt of MCC's request for repayment. For the avoidance of doubt, interest will accrue from the date of the violation and will be calculated at the 10-year U.S. Treasury Note rate prevailing as of the close of business in Washington, DC as of the date of MCC's request for payment. The Government will not use MCC Funding, proceeds thereof or Program Assets to make such payment.

(b) Notwithstanding any other provision in this Compact or any other agreement to the contrary, MCC's right under this Section 5.2 for a refund will continue during the Compact Term and for a period of (i) five (5) years thereafter, or (ii) one (1) year after MCC receives actual knowledge of such violation, whichever is later.

Section 5.3 Survival

The Government's responsibilities under Sections 2.4, 2.6, 2.7, 2.8, 3.7, 3.8, 5.1(c), 5.1(d), 5.2, 5.3, 6.2, and 6.4 of this Compact will survive the expiration, suspension, or termination of this Compact.

Article 6. Compact Annexes; Amendments; Governing Law

Section 6.1 Annexes

Each annex to this Compact constitutes an integral part hereof, and references to "Annex" mean an annex to this Compact unless otherwise expressly stated.

Section 6.2 Amendments

(a) The Parties may amend this Compact only by a written agreement signed by the Principal Representatives.

(b) Without amending this Compact, the Government hereby acknowledges and agrees that the Parties may, through the Principal Representative or any Additional Representative, in writing agree to modify any Annex to this Compact to (i) suspend, terminate (including the termination of a Project Objective), or modify any project described in Annex I (each, a "*Project*" and collectively, the "*Projects*") or to create a new project, (ii) change the allocations of funds from what is set forth in Annex II as of the date hereof, or (iii) add, delete, or waive any condition precedent described in Annex

IV, *provided that* any such modification, (1) is consistent in all material respects with the Program Objective, (2) does not cause the amount of Program Funding to exceed the aggregate amount specified in Section 2.1 of this Compact (as may be modified by operation of Section 2.2(e) of this Compact), (3) does not cause the amount of Compact Implementation Funding to exceed the aggregate amount specified in Section 2.2(a) of this Compact, (4) does not cause the Government's responsibilities or contribution of resources to be less than specified in this Compact, (5) does not extend the Compact Term, and (6) in the case of a modification to change allocations of funds among Projects or the creation of a new Project, does not materially adversely affect any components under the Program Administration and Audits or Monitoring and Evaluation line items in Annex II.

(c) Any modification of any Annex to this Compact signed in accordance with Section 6.2(b), or any modification of any other provision of this Compact pursuant to Section 6.2(a), will be binding on the Government without the need for further action by the Government, any further Congressional action, or satisfaction of any additional legal requirements of the Philippines.

Section 6.3 Inconsistencies

In the event of any conflict or inconsistency between:

(a) Any Annex to this Compact and any of Article 1.1 and Articles 2 through 8, such Article 1.1 and Articles 2 through 8, as applicable, will prevail; or

(b) This Compact and any other agreement between the Parties regarding the Program, this Compact will prevail.

Section 6.4 Governing Law

This Compact is an international agreement and as such will be governed by the principles of international law.

Section 6.5 Additional Instruments

Any reference to activities, obligations, or rights undertaken or existing under or in furtherance of this Compact or similar language will include activities, obligations, and rights undertaken by or existing under or in furtherance of any agreement, document, or instrument related to this Compact and the Program.

Section 6.6 References to MCC Web site

Any reference in this Compact, the PIA, or any other agreement entered into in connection with this Compact, to a document or information available on, or notified by posting on, the MCC Web site will be deemed a reference to such document or information as updated or substituted on the MCC Web site from time to time.

Section 6.7 References to Laws, Regulations, Policies, and Guidelines

Each reference in this Compact, the PIA, or any other agreement entered into in connection with this Compact, to a law, regulation, policy, guideline, or similar document (including, but not limited to, the Program Guidelines) will be construed as a reference to such law, regulation, policy, guideline, or similar document as it may, from time to time, be amended, revised, replaced, or extended and will include any law, regulation, policy, guideline, or similar document issued under or otherwise applicable or related to such law, regulation, policy, guideline, or similar document.

Section 6.8 MCC Status

MCC is a United States government corporation acting on behalf of the United States government in the implementation of this Compact. MCC and the United States government have no liability under this Compact, the Program Implementation Agreement, or any related agreement, are immune from any action or proceeding arising under or relating to any of the foregoing documents, and the Government hereby waives and releases all claims related to any such liability. In matters arising under or relating to this Compact, the Program Implementation Agreement, or any related agreement, neither MCC nor the United States government will be subject to the jurisdiction of the courts of the Philippines or of any other jurisdiction or of any other body.

Section 6.9 Counterparts; Electronic Delivery

(a) Counterparts. Signatures to this Compact, the Program Implementation Agreement, and any amendments to these agreements will be signed on the same page, except in the case of amendment via exchange of letters or diplomatic notes. Any other documents arising out of this Compact may be signed in one or more counterparts. Such counterparts when delivered and taken together will constitute a single document.

(b) Electronic Delivery. A signature to this Compact, the Program Implementation Agreement, and any amendments to such agreements, will be an original signature. With respect to any other documents arising out of this Compact, a signature delivered by facsimile or electronic mail in accordance with Section 4.1 of this Compact will be deemed an original signature and will be binding on the Party delivering such signature, and the Parties hereby waive any objection to such signature or to the validity of the underlying document, certificate, notice, instrument, or agreement on the basis of the signature's legal effect, validity or enforceability solely because it is in facsimile or electronic form.

Article 7. Entry Into Force

Section 7.1 Conditions Precedent to Entry Into Force

Before this Compact enters into force:

(a) The PIA must have been signed by the parties thereto;

(b) The Government must have delivered to MCC:

(i) A legal opinion from the Secretary of Justice of the Philippines (or such other legal representative of the Government acceptable to MCC), in form and substance satisfactory to MCC; and

(ii) Complete, certified copies of all decrees, legislation, regulations, or other governmental documents relating to the Government's domestic requirements for this Compact to enter into force, which MCC may post on the MCC Web site or otherwise make publicly available; and

(c) MCC must determine that, after signature of this Compact, the Government has not engaged in a pattern of actions inconsistent with the eligibility criteria for MCC Funding.

Section 7.2 Date of Entry Into Force

This Compact will enter into force on the date of the last letter in an exchange of letters between the Principal Representatives confirming that each Party has completed its domestic requirements for entry into force of this Compact and that the conditions precedent to entry into force of Section 7.1 have been met. The letter from the Government will contain an affirmation of the Government's commitment to its obligations hereunder and under the Program Implementation Agreement.

Section 7.3 Compact Term

This Compact will remain in force for five (5) years after its entry into force, unless terminated earlier under Section 5.1 (the "*Compact Term*").

Section 7.4 Provisional Application

Upon signature of this Compact and until this Compact has entered into force in accordance with Section 7.2, the Parties will provisionally apply the terms of this Compact and the PIA; *provided that,* no Program Funding will be made available or disbursed before this Compact enters into force.

Article 8. Additional Government Covenants

Section 8.1 Project Covenants

(a) KALAHI–CIDSS Project. With regard to the KALAHI–CIDSS Project, the Government agrees that:

(i) Throughout the Compact Term, the Department of Social Welfare and Development ("*DSWD*") will use the classification system approved by MCC to assess and classify every proposed sub-project, and provide the engineering design and oversight support appropriate to the classification of such sub-project; and

(ii) For those municipalities that are randomly selected to be included in the control group, DSWD will not (1) provide KALAHI–CIDSS funding, or (2) provide other programs of DSWD on a systematic basis, in both cases for the duration of the Compact Term.

(b) Revenue Administration Reform Project. With regard to the Revenue Administration Reform Project, the Government agrees to implement the following prior to the initial disbursement of any Program Funding for the Revenue Administration Reform Project:

(i) To the full extent allowed by existing law, procedures shall be put in place wherein decisions of the Commissioner of Internal Revenue and the Commissioner of Customs in all graft-related cases shall be transmitted promptly to the Secretary of Finance, the head of the Revenue Integrity Protection Service created under Executive Order No. 259, s. 2003, who shall then immediately forward them to the Revenue Integrity Protection Service to review the said cases and determine their compliance with existing laws and procedures. If warranted by the evidence on record and any additional evidence it gathers, the Revenue Integrity Protection Service shall file the necessary complaint(s) with the office of the ombudsman or other appropriate administrative body or agency of competent jurisdiction.

(ii) The Revenue Integrity Protection Service shall actively exercise its powers pursuant to Executive Order No. 259, to ensure the proactive pursuit of graft-related programs, policies and procedures by the internal inspection units of the revenue agencies under the Department of Finance. These actions shall include, but may not be limited to, the conduct of operational audits of said units.

(iii) The Bureau of Internal Revenue and the Bureau of Customs internal audit units will be reorganized directly under the Office of the Commissioner.

In Witness Whereof, the undersigned, duly authorized by their respective governments, have signed this Compact.

Done at New York, NY, this 23rd day of September 2010, in the English language only.

For Millennium Challenge Corporation, on behalf of the United States of America.

Daniel W. Yohannes,
Chief Executive Officer.

For the Republic of the Philippines.
Cesar V. Purisima,
Secretary of Finance.

Annex I Program Description

This Annex I describes the Program that MCC Funding will support in the Philippines during the Compact Term.

A. Program Overview

1. Background and Consultative Process

The Philippines was declared eligible for MCC assistance in March 2008. With a population of approximately 90 million inhabitants, the 7,107 islands of the Philippines cover a combined area of 115,830 square miles. Despite unprecedented growth gains over the past decade, accompanied by moderate inflation, the Philippines continues to face severe constraints to reducing poverty. In an effort to prioritize its development spending, the Government elaborated a national medium-term development plan and several sector strategies, and undertook an analysis of constraints to economic growth. Priorities were identified for increased social sector spending, improvements to basic infrastructure, and improvements to governance, and were confirmed through a number of national, regional, and local consultations from early 2007 through early 2009.

The Program has been designed by the Government, building upon initiatives from numerous donors, non-governmental organizations, and the domestic private sector to spur growth in economically depressed or vulnerable regions and to provide a platform for continued poverty reduction efforts. The Program will enable the Government to increase resources available for high-priority expenditures and target Government initiatives toward some of the poorest regions and municipalities in the archipelago.

2. Program Objective

The Program Objective is to: (a) Increase the incomes of Filipinos through the benefits of community-driven sub-projects; (b) obtain time savings and lower transportation costs for road users in Program areas; and (c) increase investment and government expenditure due to an increase in tax revenue and a reduction in corruption.

3. Environmental and Social Safeguards

The Program will be implemented in compliance with the MCC Environmental Guidelines, MCC guidance on the integration of gender in program implementation, and MCC's guidance on the implementation of resettlement activities (or any other MCC policy comparable to the World Bank's Operational Policy on Involuntary Resettlement in effect as of July 2007) ("*OP 4.12*"). The Government will also ensure that the Projects comply with all national environmental laws and regulations, licenses and permits, except to the extent such compliance would be inconsistent with this Compact. The Government will: (a) Cooperate with any ongoing environmental review, or if necessary undertake and complete any additional environmental reviews required by MCC or under the laws of the Philippines; (b) implement to MCC's satisfaction environmental and social mitigation measures identified in such environmental review; and (c) fund the costs of environmental mitigation (including costs of resettlement) that exceed the MCC Funding specifically allocated for such costs in the budget for any Project. To maximize the positive social impacts of the program, the Government will take steps to address cross-cutting social and gender-specific issues, including, but not limited to, combating human trafficking and HIV/AIDS, during Compact implementation.

B. Description of the Projects

Set forth below is a description of each of the Projects that the Government will implement, or cause to be implemented, using MCC Funding to advance the applicable Project Objective. In addition, specific activities that will be undertaken within each Project (each, an "*Activity*"), including sub-activities, are described.

1. KALAHI–CIDSS Project

(a) Background.

The Philippines lags significantly behind other countries in the region with respect to government development expenditures as a percentage of GDP and infrastructure investment and quality. The Asian Development Bank's 2007 growth diagnostic report found that inadequacies in infrastructure are a critical constraint to growth and that the availability of basic infrastructure (water, sanitation, roads, electricity) is regressive. While human capital was not found to be a critical constraint to growth, inadequate human capabilities are often an underlying cause of poverty. Provision and use of education and health services were found to vary across regions, particularly as a function of incomes. Community driven development projects are a strategy for addressing these constraints and providing community empowerment and poverty reduction. In the past, they have been used to support a wide range of community priority needs including provision of water supply and nutrition programs for women and children; building of school, day care and health facilities, farm to market roads, foot bridges, and drainage systems; and support for productive enterprises such as pre- and post-harvest facilities as well as community capacity building.

Kapit bisig Laban sa Kahirapan ("Linking Arms Against Poverty")—Comprehensive Integrated Delivery of Social Services ("*KALAHI–CIDSS*") is a community driven development project implemented by DSWD of the Philippines. Through KALAHI–CIDSS, communities ("*barangays*" or villages) are trained, together with their local

governments, both at the *barangay* and the municipal level, to choose, design and implement sub-projects that are intended to address their most pressing needs. This is done through a four-year program, which includes one year of "social preparation" training for communities, *barangays* and municipalities, followed by 3 "cycles" of sub-project implementation. The KALAHI–CIDSS project to be funded by MCC (the "*KALAHI–CIDSS Project*") is an expansion of an initial KALAHI–CIDSS project ("*KC1*") that was implemented between 2003 and 2010. KC1 was funded by a loan from the World Bank. During KC1 implementation, the World Bank and DSWD were able to ensure that the project incorporated lessons learned and reinforced elements that had been shown to work well.

The KALAHI–CIDSS Project is particularly well suited to the sociopolitical environment in the Philippines. Following decentralization, local governments have a responsibility to provide basic services, yet suffer from a lack of development resources. This issue is compounded by the geographic distribution of poverty in the Philippines. Poverty in the country is correlated with rural isolation and distance from towns and urban centers, meaning that the communities that have the greatest needs for basic services are the ones that are most difficult to reach. Community-driven development offers an alternative, needs-based approach that provides development resources for basic services directly to the poorest communities, specifically targeting those in far-flung areas, while at the same time building the capacity of local government to be responsive to these needs over time. It is because of this contextualized approach that KC1 has already met with considerable success.

(b) Project.

The objectives of the KALAHI–CIDSS Project are to:

- Improve the responsiveness of local governments to community needs;
- Encourage communities to engage in development activities; and
- Deliver benefits to *barangay* residents through the individual sub-projects.

In conjunction with DSWD, MCC will incorporate a number of enhancements to KC1 into the KALAHI–CIDSS Project, all of which are supported by lessons learned from KC1 and desires expressed by KALAHI–CIDSS Project stakeholders. These refinements include, but are not limited to: (i) Dedicated gender staff positions and gender-focused activities, including the provision of "gender incentive grants" to communities; (ii) reinforced financial controls on the Project, including an additional set of transaction and technical audits; (iii) dedicated staff positions to explore private-sector involvement opportunities within municipalities included in the KALAHI–CIDSS Project; (iv) development of a set of user-friendly community tools to assess environmental impact and ensure the KALAHI–CIDSS Project's environmental sustainability; (v) a management information system to enable a much greater level of data capture at the *barangay* and municipal level, including a "geographic information system" component; (vi) a rigorous impact evaluation to assess the KALAHI–CIDSS Project's impact on social capital and welfare measures using a rigorous random selection technique that allows the measurement of attribution; and (vii) support for a joint advisory board to oversee the impact evaluation, composed of members from MCC, MCA–Philippines, the World Bank, DSWD, the National Economic Development Authority, and local academics.

The KALAHI–CIDSS Project will cover municipalities that have a poverty incidence higher than the national average and that are not in the Mindanao island group. The KALAHI–CIDSS Project consists of the following Activities:

(i) Capacity Building and Implementation Support Activity.

MCC Funding will be granted to DSWD to provide the staff salaries and trainings for the DSWD frontline workers, known as the area coordinating teams. These teams are made up of a standard staffing complement and there will be one team for each municipality in the KALAHI–CIDSS Project. The role of the area coordinating team is to carry out the "Community Empowerment Activity Cycle." This framework follows a progression of strategies and activities as a gradual "hand off" to local government of responsibilities takes place over the course of three cycles. During each cycle, *barangay*s hold a series of meetings that are facilitated by members of the area coordinating team at which *barangay* residents identify and prioritize constraints to economic activities within their communities and then identify and prioritize solutions to these constraints. Finally, the *barangay* selects one constraint and associated solution for presentation by elected community representatives to the "Municipal Inter-*Barangay* Forum." At the municipal level, two Municipal Inter-*Barangay* Forums are held, the first to determine the criteria by which the community representatives will prioritize the *barangay* sub-projects for funding and the second to prioritize them according to such criteria. At the conclusion of each of the three cycles of sub-project implementation, there is a transition and reporting period. The entire Community Empowerment Activity Cycle process is facilitated by the area coordinating team, with various team members responsible for ensuring that processes are transparent and in accordance with the KALAHI–CIDSS Project manuals as revised by MCC. This Activity also supports the existing grievance redress system.

(ii) Grants for Community Projects Activity.

MCC Funding will be granted to DSWD, to be used by DSWD to plan and implement community-chosen sub-projects in accordance with the KALAHI–CIDSS Project manuals approved by MCC. Specifically, the KALAHI–CIDSS Project provides grants for livelihood activities and the construction, repair and improvement/upgrading of small-scale rural infrastructure sub-projects identified by the community. The municipalities and *barangays* in which sub-project activities will occur will make cash and in-kind contributions (including partially-paid labor and local materials) to the sub-projects equal, in each case, to at least 30 percent of the total sub-project costs. The grant allocated to the municipal local governments to fund sub-project implementation is proportionate in size to the number of *barangay*s within that municipality. Suppliers and contractors will be selected according to the procedures in the "Community-Based Procurement System." This procurement system was specifically designed for implementing the KALAHI–CIDSS Project taking into account the nature of the procurements, the local market conditions and the local capacities. At the community level an "Audit and Inventory Committee" is responsible for auditing the financial records and reports of the community and conducting a regular inventory of all properties acquired by the community. The community's books and records are open at all times to all members of the community for inspection.

Communities have the opportunity to select from a variety of sub-projects, many which involve the selection, design, and construction of small infrastructure sub-projects. DSWD—in cooperation with local governments—will build the capacity of communities through trainings and other methods and provide guidance and oversight throughout the process. In cooperation with DSWD, MCC will create a detailed risk profiling system for sub-projects and a complementary risk-based management approach to oversight that may affect the way that the grants are spent within the Grants for Community Project Activity.

(iii) Project Management Activity.

MCC Funding will be granted to DSWD to provide salaries and training for DSWD project management staff at the regional and national level. These funds will also be used for the office space, conferences, capacity building and project monitoring associated with the project management activity. Goods to support this activity will be procured by MCA-Philippines.

(c) Beneficiaries.

In the project catchment areas (*i.e.* those municipalities that will receive support from the KALAHI–CIDSS Project), 16 to 20 percent of the households have a female head, while the young and elderly constitute a significant fraction of the expected beneficiaries. The Project is expected to benefit approximately 5.2 million Filipinos 20 years after the Compact enters into force. Of these, 39 percent consume below the poverty line of US$2 (in 2005 PPP US dollars) per day (compared to 28 percent of the national population). As for the extreme poor, 13 percent of the Project's beneficiaries consume below US$1.25 a day (compared to 9 percent of the national population). And as for the non-poor, only 26 percent of this Project's beneficiaries consume above US$4 a day (as opposed to 38 percent of the national population). Overall, the Project is well-targeted to the poor.

(d) Donor Coordination.

MCC worked closely with the World Bank on issues of targeting and impact evaluation strategy over the course of project development in 2009. As of January 2010, the World Bank intends to provide an additional loan to expand KC1. The World Bank and MCC plan to continue close collaboration

during and beyond the scope of this additional funding and share lessons learned with each other and with DSWD as KALAHI–CIDSS continues to mature and develop towards a potential national expansion that could involve many other donors. MCC will also be joining DSWD's donor forum related to KALAHI–CIDSS.

(e) USAID.

The United States Agency for International Development ("*USAID*") has had significant experience with community-based development that targets poor communities, and the "Growth with Equity in Mindanao" Program has provided a number of lessons for the implementation of the KALAHI–CIDSS Project as it relates to small-infrastructure construction specifically. Approximately 60 percent of USAID's program funding is provided to Mindanao and the agency aims to continue these investments and others like it in the region. Therefore, USAID, the World Bank and MCC agreed that MCC would concentrate its KALAHI–CIDSS Project in the Luzon and Visayas regions thereby broadening the reach of such programs throughout the Philippines.

(f) Sustainability.

The implementation methods used in this Project emphasize transparency and accountability in local decision making, attributes which enable small infrastructure sub-projects to contribute to a more empowered citizenry, a more responsive government and ultimately to more sustainable community assets. The process of involving communities in sub-project activities builds their capacity to take charge of their own development within the KALAHI–CIDSS Project and beyond, reduces corruption, increases accountability for the use of resources and results in more and better distributed assets as communities build a sense of ownership around these assets.

DSWD will use a set of sustainability and functionality evaluation tools to assess MCC-funded sub-projects and will target those sub-projects experiencing sustainability-related difficulties with additional resources to resolve them. MCC's risk profiling and risk management approach described above will also contribute to sub-project sustainability by ensuring that the most risk-prone projects are designed and constructed to minimize risk, reducing the likelihood of sub-project failure.

The sustainability of the KALAHI–CIDSS Project and its ability to attract new and continued resources from both the Government and other donors is closely related to its ability to demonstrate continuing project successes as it moves towards a national scale. MCC Funding will be used for a robust impact evaluation that will assist the Government in evaluating the effectiveness of the community-driven development model.

2. Secondary National Roads Development Project

(a) Background.

Road transportation is the dominant transport mode in the Philippines, accounting for 53 percent of freight ton-kilometers and 89 percent of passenger ton-kilometers. The Philippines has a total road network of about 200,000 km, including about 29,000 km of national roads. Approximately 79 percent of the national arterial roads are paved, and 48 percent of these require rehabilitation.[1]

Inter- and intra-island transport systems have a crucial role in supporting the economic development of the widely dispersed regions of the Philippine archipelago. However, the present inadequate condition of infrastructure facilities and lack of reliable, safe, and efficient transport services significantly hamper the movement of passengers and cargo throughout the country, thus limiting direct internal and external trade links and tourism, and constituting a major constraint to increased regional economic growth. This is particularly true in many poor areas of the Philippines, where adequate accessibility has the potential to lower marketing costs for local agricultural products, improve access of the local population to social services and economic opportunities, and be a catalyst for investments to develop local resources.

(b) Project.

The objectives of the Project to be funded by MCC in respect of the sections of the Samar road described below (the "*Secondary National Roads Development Project*") are to: (i) Save time; and (ii) lower vehicle operating costs for those Filipinos living near the roads. This Project consists of the following Activity:

(i) Samar Road Activity.

MCC Funding will be used to reconstruct and rehabilitate 220 km of the Samar road crossing the provinces of Samar and Eastern Samar, of which approximately 180 km will undergo reconstruction/major rehabilitation while 40 km will receive only minor rehabilitation, as well as the replacement or upgrading of associated structures, such as bridges and culverts, to eliminate flooding and improve road safety. The road begins at the junction of Highway-Buray Wright (km 827 + 200) in Samar, and traverses eastward along primarily mountainous terrain to Taft (km 890 + 000). From Taft, it continues southward, along the coastline of Eastern Samar, ending in the town of Guiuan (km 1047 + 300). The section of road from Wright to Taft is an important east-west corridor providing inter-provincial connection between Samar and Eastern Samar. The section of the road from Taft to Guiuan provides the only access to 13 coastal municipalities. The capital of Eastern Samar, Borongan, is located centrally on this section of the road.

(1) Construction costs. These costs include, without limitation, pavement rehabilitation and strengthening, embankment construction, road safety improvements, replacement or upgrading of associated structures, such as bridges, drainage systems and culverts, and any activity associated with the environmental management plan developed with respect to the Samar Road Activity.

(2) Non-construction costs. These costs include, without limitation, studies, construction supervision, environmental and social mitigation (including resettlement), and other project management costs and technical assistance to be incurred in connection with the Samar Road Activity.

(c) Beneficiaries.

A 2006 household survey shows that in this Project's regions, two of the most common occupations for household heads are farmers and drivers. These people would be expected to rely significantly on transportation infrastructure. The survey indicates, in addition, that from 16 to 20 percent of households have a female head, while the young and elderly constitute significant fractions of household members in the Project regions. Improvement of the road will benefit the users and owners of motorized vehicles, including laborers, enterprises, consumers and tourists. Estimates of the total number of beneficiaries are based upon a percentage of the populations of municipalities through which this road will pass.

The beneficiary analysis conducted as part of the project appraisal process has estimated that approximately 282,000 people will benefit from rehabilitation of the Samar road. Thirteen percent of the beneficiaries are estimated to consume below the poverty line of US$1.25 per day in 2005 PPP US dollars, while 42 percent of project beneficiaries are estimated to consume below US$2 per day. Relative to the national distribution of consumption, the beneficiaries of the Samar road are substantially poorer. Aggregated over 25 years, beneficiaries are expected to accumulate an increment equal to 86 percent of their 2009 annual (median) income due to this Project.

(d) Donor Coordination.

The Secondary National Road Development Project is anchored on preliminary work undertaken with the assistance of Japan Bank for International Cooperation (now known as the Japan International Cooperation Agency), which was instrumental in identifying viable priority road segments eligible for MCC investments.

MCC has coordinated closely with the World Bank on the ongoing efforts in: (i) Road sector reform; (ii) improving the adequacy of the "Special Road Support Fund" (as described below); (iii) improving governance structure for the Special Road Support Fund; (iv) standardizing measures and approaches used to combat corruption and to increase accountability (funded by the Australian Agency for International Development) during project execution; and (v) standardizing technical audits.

(e) USAID.

While USAID is not currently active in secondary national road rehabilitation in the Philippines, USAID's "Growth with Equity in Mindanao" Program mentioned above includes the development of road infrastructure.

(f) Sustainability.

There are two main sources of public finance for the national road network: (i) The General Appropriations Act; and (ii) a "Special Road Support Fund" that is financed by the imposition of a motor vehicle user charge. The overall resources devoted to the national road sector have increased considerably since 2004.

[1] "Philippines: Critical Development Constraints," Asian Development Bank, December 2007.

Despite the large increases, there remains a considerable gap (about 30 billion Philippine pesos) between the sector's need and the projected resource allocation. To meet the overall needs of the sector and reduce the existing gap, greater funding is required from three sources. The first source is increased government budgetary allocations for the sector. The second source is the private sector, the resources of which can be utilized for network expansion when roads involve expressways that can be subject to tolling arrangements. The third source of revenue is the Special Road Support Fund. To improve sustainability, the Government needs to augment revenues from the motor vehicle user charge through raising the current charge, indexing such charge to the general price level, and by introducing a fuel levy.

3. Revenue Administration Reform Project

(a) Background.

The Asian Development Bank cited the Philippines' tight fiscal situation as one of its most significant constraints to growth.[2] One consequence of the Philippines' tight fiscal situation is its limited ability to fund its growing needs for basic infrastructure and social programs and, thereby, to reduce poverty. The Philippines has seen a declining rate of tax effectiveness, *i.e.* tax revenues divided by GDP, in recent years due in part to legislated reductions in corporate tax rates and increases in personal exemptions.

In addition, tax-related patterns of non-compliance and tax administration inefficiencies contribute to a poor business climate and, ultimately, to a reduced rate of domestic investment. Since the Asian financial crisis of 1997, the Philippines has ranked the lowest among its major regional neighbors in foreign direct investment.[3] The Philippines has struggled in recent years to improve its international rankings with regard to corruption.

MCC supported some of the Government's anti-corruption efforts through MCC's Philippines Threshold Program that sought to improve the Government's office of the ombudsman's pursuit of tax evaders and smugglers as well as to roll out nationwide the Integrated Tax System in offices of the Bureau of Internal Revenue ("*BIR*"). Several of the themes of MCC's Philippines Threshold Program have carried over into this Project.

(b) Project.

The objectives of the Project to be supported by MCC Funding in connection with the reform of tax collection in the Philippines (the "*Revenue Administration Reform Project*") are to increase tax revenues over time and to support the Department of Finance's initiatives to detect and deter corruption within its revenue agencies. The Project consists of two Activities as further described below: (i) An Activity focused on BIR's efforts to re-engineer its policies and practices and to implement the electronic Tax Information System ("*eTIS*"); and (ii) an Activity focused on supporting the Philippines' Revenue Integrity Protection Service ("*RIPS*") the anti-graft investigation unit within the Department of Finance. In turn, the BIR-focused Activity will consist of three sub-activities as further described below: (1) The implementation of eTIS; (2) the utilization of automated auditing tools in the large taxpayer unit; and (3) a public awareness campaign to disseminate information about BIR's reform and enforcement activities.

(i) BIR Revenue Administration Reform Activity.

(1) eTIS sub-Activity.

MCC Funding will provide an International Monetary Fund ("*IMF*") resident advisor on tax administration, and support the cost of short-term IMF tax administration specialists as well as other systems and technology consultants, the training of BIR staff, and the procurement of equipment related to the implementation of eTIS. This sub-Activity will improve the trustworthiness of data, increase access to that data, and improve the actions and decisions based on that data. From a tax administration perspective these results can be described as improving compliance monitoring, reducing client contact and the concomitant opportunities for negotiated assessments, increasing the likelihood of the detection of misreporting, and improving the value of reports. These are the components that will contribute to a sustainable program of tax administration with improved compliance, audit and enforcement tools.

(2) Automated Auditing Tools Sub-Activity.

MCC Funding will purchase software licenses for automated auditing tools and provide computers to run them. MCC Funding will also pay for a subscription to a data base service to provide BIR with transfer pricing information and provide training for the use of these tools. The automated auditing tools will leverage a recent BIR decision that requires large taxpayers to maintain and submit tax records in digital form and will also expand on a pilot program sponsored by the Swedish International Development Agency that demonstrates the values of these tools. These auditing tools have demonstrated their revenue-raising potential, and they also reduce by half the number of days it takes to complete an audit. These tools also remove one taxpayer concern about the fairness of an audit that is based on sampling rather than a review of all transactions. The reduction in man days per audit will help the BIR to reduce its backlog of unfinished audits.

(3) Public Awareness Campaign Sub-Activity.

MCC Funding will provide consulting services and support the costs of implementing a public awareness campaign regarding BIR services and programs. Individuals and businesses in the Philippines have a limited understanding of their tax obligations and BIR programs. Many BIR services—particularly on-line services—are under-utilized. Greater understanding of tax obligations, and an increased ability to access tax information, should lead to better compliance. It is also hoped that, as with the eTIS sub-Activity, utilization of on-line services will reduce the opportunities for corruption that in-person transactions may provide. The public awareness campaign is intended to promote increased compliance with tax rules and thus increased revenue collection through better public and business awareness of the BIR's plans, programs, initiatives, policies and practices.

(ii) RIPS Activity.

MCC Funding will fund the acquisition and customization of case management software, a related data depository system, and training. This will support RIPS, a relatively new unit within the Department of Finance, and is intended to strengthen surveillance and discipline of the Department of Finance and its attached agencies through administrative actions such as temporary suspensions or dismissals. Experience in MCC's Philippines Threshold Program showed that actions taken through the courts in the Philippines are slow and that, even when a conviction is secured, punishment is likely to be deferred and/or reduced through subsequent appeals. For that reason, this Activity focuses on trying to detect and punish those forms of malfeasance that permit revenue agents to reap financial rewards from taxpayers. By increasing the likelihood of detection and punishment, the frequency of such incidents will decline. If effective, this should improve the image of revenue generating agencies and also support increased collections and improve the business climate within the Philippines.

(g) Beneficiaries.

Beneficiary analysis for the Revenue Administration Reform Project is undertaken at the level of the overall Project since the incidence of benefits from each Activity is expected to be spread broadly throughout the Philippine population. Accordingly, aggregation at the Project level is reasonable.

Identifying beneficiaries in this broad-based, national program is challenging. It is reasonable to expect, however, that a majority of the population of the Philippines will—due to increased public revenues and expenditures or domestic investments—enjoy at least a small increase to their incomes over the benefits horizon of 2011 to 2030. Accordingly, MCC estimates (conservatively) that 85 percent of the country's population, which will be approximately 125 million people, are beneficiaries of this Project by 2030. Consequently, the distribution of the Revenue Administration Reform Project's benefits by poverty level mirrors the national population's poverty distribution.

Since rates of access to health and education services are already relatively high in the Philippines, most Project impacts will be realized as increases in quality and reliability of existing services. As a consequence, and also due to the large number of beneficiaries expected for the project, per-beneficiary benefits are fairly modest.

(h) Donor Coordination.

The due diligence for the tax administration aspects of the Revenue Administration Reform Project was undertaken in close cooperation with the IMF's Fiscal Affairs Division as well as with the World Bank's National Program Supporting Tax Administration Reform program to support tax reform efforts in the

[2] "Philippines: Critical Development Constraints," Asian Development Bank, December 2007, p. 49.

[3] *Ibid.* p. 26.

Philippines. The outlines of the eTIS sub-Activity and its emphasis on process redesign and training are based on long-standing recommendations that have been made by the IMF and World Bank to the BIR.

It is anticipated that the tax administration advisors provided to the BIR under the Compact will be sourced through the IMF and coordinated by a resident IMF advisor in Manila, the Philippines.

The Automated Audit Tools sub-Activity builds on the previous efforts of the Swedish International Development Agency and the World Bank. Both donors have sponsored pilot programs in the utilization of automated audit tools.

(i) USAID.

MCC's due diligence relied heavily on the reports and findings of MCC's Philippines Threshold Program administered by USAID. That program included support for anti-corruption activities under the aegis of the office of the ombudsman, and assistance to the Department of Finance's anti-corruption units, as well as the extension of the Integrated Tax System (eTIS' predecessor) to regional offices that had not previously been able to implement that system. The lessons learned under MCC's Philippines Threshold Program were the basis for decisions to focus on internal administrative disciplinary procedures (the focus of the RIPS Activity) rather than the pursuit of tax evaders and smugglers through the courts, to broaden the scope of tax administration, and to focus more resources on training and process redesign than on hardware and software.

(j) Sustainability.

A critical ingredient to the success of this complex undertaking is the continued commitment of the Department of Finance to embark on a program that is likely to meet with staff as well as taxpayer resistance and to manage the personnel, organizational and technical issues that will require both vision and resolve. Maintaining that commitment over the course of the Compact Term will be a test of BIR's and the Department of Finance's management skills and staff capacity.

(k) Policy, Legal, Regulatory and Other Reforms.

The Department of Finance has completed or committed to complete a number of policy, legal, regulatory and other reforms in order to achieve success under this Project. These reforms are referenced in the Compact, the Program Implementation Agreement, and in other documents.

4. Implementation Framework

(a) Overview.

The implementation framework and the plan for ensuring adequate governance, oversight, management, monitoring and evaluation, and fiscal accountability for the use of MCC Funding are summarized below. MCC and the Government will enter into the Program Implementation Agreement, and any other agreements in furtherance of this Compact, all of which, together with this Compact, set out certain rights, responsibilities, duties and other terms relating to the implementation of the Program.

(b) MCC.

MCC will take all appropriate actions to carry out its responsibilities in connection with this Compact and the Program Implementation Agreement, including the exercise of its approval rights in connection with the implementation of the Program.

(c) MCA-Philippines.

In accordance with Section 3.2(b) of this Compact, MCA-Philippines will act on the Government's behalf to implement the Program and to exercise and perform the Government's rights and responsibilities with respect to the oversight, management, monitoring and evaluation, and implementation of the Program, including, without limitation, managing the implementation of Projects and their Activities, allocating resources, and managing procurements. The Government will ensure that MCA-Philippines takes all appropriate actions to implement the Program, including the exercise and performance of the rights and responsibilities designated to it by the Government pursuant to this Compact and the Program Implementation Agreement. Without limiting the foregoing, the Government will also ensure that MCA-Philippines has full decision-making autonomy, including, *inter alia,* the ability, without consultation with, or the consent or approval of, any other party, to: (i) Enter into contracts in its own name; (ii) sue and be sued; (iii) establish Permitted Accounts in a financial institution in the name of MCA-Philippines and hold MCC Funding in such accounts; (iv) expend MCC Funding; (v) engage a fiscal agent who will act on behalf of MCA-Philippines on terms acceptable to MCC; (vi) engage one or more procurement agents who will act on behalf of MCA-Philippines, on terms acceptable to MCC, to manage the acquisition of the goods, works, and services required by MCA-Philippines to implement this Compact; and (vii) competitively engage one or more auditors to conduct audits of its accounts. The Government will take the necessary actions to establish and maintain MCA-Philippines, in accordance with the terms hereof including the applicable conditions precedent to the Disbursement of Compact Implementation Funding set forth in Annex IV to this Compact.

MCA-Philippines will be administered and managed by a Board of Trustees and a Management Unit. In addition, MCA-Philippines will have a Stakeholders' Committee to continue the consultative process during implementation of the Program. The governance of MCA-Philippines will be set forth in more detail in the Establishment Decree, the Program Implementation Agreement, and the internal regulations of MCA-Philippines ("*MCA-Philippines Bylaws*"), which will, collectively, set forth the responsibilities of the Board of Trustees, the Stakeholders' Committee and the Management Unit. The MCA-Philippines Bylaws will be developed and adopted in accordance with MCC's Guidelines for Accountable Entities and Implementation Structures, published on the MCC Web site (the "*Governance Guidelines*"), and will be in form and substance satisfactory to MCC.

(i) Board of Trustees.

(1) Composition. MCA-Philippines will be governed by a board of trustees (the "*Board of Trustees*"), which will consist of voting members representing those Government departments and civil society and private sector organizations set forth in the Establishment Decree and the MCA-Philippines Bylaws. The Board of Trustees will also consist of those non-voting observers set forth in the MCA-Philippines Bylaws. All voting members will be selected in accordance with the MCA-Philippines Bylaws and must be sufficiently senior and qualified to make decisions on behalf of their respective ministries and civil society and private sector organizations, as applicable. Each voting member named to serve on the Board of Trustees, and any replacement for any voting member or any alteration of the size or composition of the Board of Trustees, will be subject to MCC prior approval.

(2) Roles and Responsibilities. The Board of Trustees will be responsible for overseeing the implementation of the Program and will have final decision-making authority over the implementation of the Program. The Board of Trustees will meet regularly; the frequency of meetings will be set forth in the MCA-Philippines Bylaws and will be in accordance with the Governance Guidelines. The specific roles of the voting members and non-voting observers will be set forth in the Establishment Decree and the MCA-Philippines Bylaws.

(ii) Stakeholders' Committee.

(1) Composition. The composition of the Stakeholders' Committee will be selected in accordance with the MCA-Philippines Bylaws and the Governance Guidelines and subject to MCC approval (the "*Stakeholders' Committee*"). Without limiting the foregoing, the Establishment Decree provides that the Stakeholders' Committee will be composed of, *inter alia,* representatives from non-governmental organizations, civil society, private sector, and local and regional government Program beneficiaries.

(2) Roles and Responsibilities. Consistent with the Governance Guidelines, the Stakeholders' Committee will be responsible for continuing the consultative process throughout implementation of the Program. While the Stakeholders' Committee will not have any decision-making authority, it will be responsible for, *inter alia,* reviewing, at the request of the Board of Trustees or the Management Unit, certain reports, agreements, and documents related to the implementation of the Program in order to provide advice and input to MCA-Philippines regarding the implementation of the Program.

(iii) Management Unit.

(1) Composition. The management unit, which will be led by a competitively selected Managing Director, will be composed of competitively selected staff with expertise in the key components of the Program, including, without limitation, a KALAHI–CIDSS Project Director, a Secondary National Roads Development Director, a Revenue Administration Reform Director, as well as a Deputy Managing Director and other key Directors, including, without limitation, a Director for Finance, a Director for Legal/General Counsel, a Director for Procurement,

a Director for Social and Environmental Assessment, and a Director for Monitoring and Evaluation, (the "*Management Unit*"). The Management Unit will also include such other personnel as provided for in the MCA-Philippines Bylaws. The directors will be supported by appropriate additional staff to enable the Management Unit to execute its roles and responsibilities.

(2) Roles and Responsibilities. The Management Unit will be based in Manila, the Philippines, and will be responsible for managing the day-to-day implementation of the Program, with oversight from the Board of Trustees. The Management Unit will serve as the principal link between MCC and the Government, and will be accountable for the successful execution of the Program, each Project, and each Activity. As a Government entity, MCA-Philippines will be subject to Government audit requirements. As a recipient of MCC Funding, MCA-Philippines will also be subject to MCC audit requirements.

(d) Implementing Entities.

Subject to the terms and conditions of this Compact and any other related agreements entered into in connection with this Compact, the Government and MCC have identified certain principal public institutions that may or will serve as implementing entities (each, an "*Implementing Entity*"), to implement and carry out certain Projects, Activities or components thereof in furtherance of this Compact. Any Implementing Entity will be subject to review and approval by MCC. The Government will ensure that the roles and responsibilities of each Implementing Entity and other appropriate terms are set forth in an agreement between MCA-Philippines and each Implementing Entity, which agreement must be in form and substance satisfactory to MCC (each an "*Implementing Entity Agreement*").

(e) Fiscal Agent.

Unless MCC otherwise agrees in writing, the Government, directly or through MCA-Philippines, will engage a fiscal agent (a "*Fiscal Agent*"), who will be responsible for assisting the Government with its fiscal management and ensure appropriate fiscal accountability of MCC Funding, and whose duties will include those set forth in the Program Implementation Agreement.

(f) Procurement Agent.

Unless MCC otherwise agrees in writing, the Government, directly or through MCA-Philippines, will engage one or more procurement agents (each, a "*Procurement Agent*") to carry out and certify specified procurement activities in furtherance of this Compact. The roles and responsibilities of each Procurement Agent will be set forth in the Program Implementation Agreement or such agreement as the Government, directly or through MCA-Philippines, enters into with each Procurement Agent, which agreement will be in form and substance satisfactory to MCC. Each Procurement Agent will adhere to the procurement standards set forth in the MCC Program Procurement Guidelines and ensure procurements are consistent with the procurement plan adopted by MCA-Philippines pursuant to the Program Implementation Agreement, unless MCC otherwise agrees in writing.

Annex II Multi-Year Financial Plan Summary

This Annex II summarizes the multi-year financial plan for the Program.

1. General

A multi-year financial plan summary ("*Multi-Year Financial Plan Summary*") is set forth below. By such time as is specified in the Program Implementation Agreement, the Government will adopt, subject to MCC approval, a multi-year financial plan that includes, in addition to the multi-year summary of estimated MCC Funding, the annual and quarterly funding requirements for the Program (including administrative costs) and for each Project, projected both on a commitment and cash requirement basis. The Multi-Year Financial Plan Summary below does not include the contributions by the Government to the Program.

MULTI-YEAR FINANCIAL PLAN SUMMARY

[Millions of US$]

Project	CIF	Year 1	Year 2	Year 3	Year 4	Year 5	Total
1. Revenue Administration Reform Project:							
(a) BIR Revenue Administration Reform Activity	7.30	11.50	15.90	9.00	5.60	1.00	50.30
(b) Revenue Integrity Protection Services (RIPS) Activity	.....	0.50	3.35	0.15	.....	.....	4.00
Sub-Total	7.30	12.00	19.25	9.15	5.60	1.00	54.30
2. KALAHI–CIDSS:							
(a) Capacity Building and Implementing Support	.....	4.91	2.84	1.48	1.11	0.28	10.62
(b) Grants for Community Projects	.....	1.82	20.43	17.99	30.81	24.46	95.51
(c) Project Management	2.31	3.06	2.31	1.93	1.87	2.39	13.87
Sub-Total	2.31	9.79	25.58	21.40	33.79	27.13	120.00
3. Secondary National Roads Development Program:							
(a) Samar road	5.66	6.61	36.01	54.38	57.30	40.22	200.18
(b) Environmental and Social Mitigation	5.09	6.53	0.82	0.87	0.95	.....	14.26
Sub-Total	10.75	13.14	36.83	55.25	58.25	40.22	214.44
4. Monitoring and Evaluation:							
Monitoring and Evaluation	0.24	2.13	1.44	1.13	1.59	1.73	8.26
Sub-Total	0.24	2.13	1.44	1.13	1.59	1.73	8.26
5. Compact Administration & Oversight:							
(a) Program Administration	4.46	3.24	3.28	3.33	3.42	3.38	21.11
(b) Program Audits	.....	0.36	0.46	0.46	0.46	0.46	2.20
(c) Fiscal Agent	.....	1.50	1.50	1.50	1.50	1.50	7.50
(d) Procurement Agent	.....	1.40	1.40	1.10	1.10	1.10	6.10
Sub-Total—Compact Administration & Audit	4.46	6.50	6.64	6.39	6.48	6.44	36.91
Total Estimated MCC Contribution	25.06	43.56	89.74	93.32	105.71	76.52	433.91

Annex III Description of the Monitoring and Evaluation Plan

This Annex III (this "*M&E Annex*") generally describes the components of the Monitoring and Evaluation Plan ("*M&E Plan*") for the Program. The actual content and form of the M&E Plan will be agreed to by MCC and the Government in accordance with the Program Implementation Agreement. The M&E Plan may be modified from time to time with MCC approval without requiring an amendment to this Annex III.

1. Overview

MCC and the Government will formulate and agree to, and the Government will implement, or cause to be implemented, an M&E Plan that specifies (a) how progress toward the Compact Goal, Program Objective and Project Objectives will be monitored ("*Monitoring Component*"), (b) a process and timeline for the monitoring of planned, ongoing, or completed Activities to determine their efficiency and effectiveness, and (c) a methodology for assessment and rigorous evaluation of the outcomes and impact of the Program ("*Evaluation Component*"). Information regarding the Program's performance, including the M&E Plan, and any amendments or modifications thereto, as well as progress, evaluation, and other reports, will be made publicly available on the Web site of MCA-Philippines and elsewhere.

2. Program Logic

The M&E Plan will be built on a logic model which illustrates how the Program, Projects and Activities contribute to the Compact Goal, the Program Objective and the Project Objectives. The goal of this Compact is to reduce poverty through economic growth. The Program Objective is to (a) increase the incomes of Filipinos through the benefits of community-driven sub-projects, (b) obtain time savings and lower transportation costs for road users in Program areas, and (c) increase investment and government expenditure due to an increase in tax revenue and a reduction in corruption. The corresponding Project Objectives are:

(a) The KALAHI–CIDSS Project expects to improve the responsiveness of local governments to community needs, encourage communities to engage in development activities and deliver benefits to *barangay* residents through the individual sub-projects.

(b) The Secondary National Roads Development Project expects to lower vehicle operating costs and save the time of those Filipinos living near the roads.

(c) The Revenue Administration Reform Project expects to increase tax revenues over time and support the Department of Finance's initiatives to detect and deter corruption within its revenue agencies.

3. Monitoring Component

To monitor progress toward the achievement of the desired impact and outcomes of the Compact, the Monitoring Component of the M&E Plan will identify (a) the Indicators (as defined below), (b) the definitions of the Indicators, (c) the sources and methods for data collection, (d) the frequency for data collection, (e) the party or parties responsible, and (f) the timeline for reporting on each Indicator to MCC.

Further, the Monitoring Component will track changes in the selected Indicators as a means for measuring progress towards the achievement of the objectives during the Compact Term. The M&E Plan will establish baselines which measure the situation prior to a development intervention, against which progress can be assessed or comparisons made (including evaluations and special studies) (each, a "*Baseline*"). MCA-Philippines will collect Baselines on the selected Indicators or verify already collected Baselines where applicable and as set forth in the M&E Plan.

(a) Indicators. The M&E Plan will measure the results of the Program using quantitative, objective and reliable data ("*Indicators*"). Each Indicator will have benchmarks that specify the expected value and the expected time by which that result will be achieved ("*Target*"). The M&E Plan will be prepared in accordance with the MCC Policy for Monitoring and Evaluation of Compacts and Threshold Programs. All Indicators will be disaggregated by gender, income level and age, and beneficiary types to the extent practicable. Subject to prior written approval from MCC, MCA-Philippines may add Indicators or refine the definitions and Targets of existing Indicators.

(i) Compact Indicators.

(1) Goal. The M&E Plan will contain the following Indicators related to the Compact Goal. These Indicators of national goals are specified in the "Medium-Term Philippine Development Plan" to which the Projects contributes, but are not solely attributable to the Projects:

(A) Annual growth in Gross National Product.

(B) Percent of households living below the subsistence poverty line.

(2) Other Indicators. The M&E Plan will contain the Indicators listed in the following tables.

TABLE 1—M&E INDICATORS FOR KALAHI–CIDSS PROJECT

Result	Indicator	Definition of indicator	Baseline [4]	Year 5 [5]
Objective Level				
Increased responsiveness of Local Government Units (LGUs) to community needs.	Use of inclusive Community Driven Development (CDD) processes by local governments.	Percentage of project municipal local government units (MLGUs) that have meetings with community representatives to solicit inputs to municipal development plans and/or percentage of *barangays* that reflect community priorities in their *barangay* development plans.	TBD	80%
	LGU provision of funds for O&M	Percentage of MLGUs that provide funding support for KALAHI–CIDSS sub-project O&M.	0%	80%
	LGU application of CDD practices to non-KALAHI–CIDSS activities.	Number of project MLGUs that pass ordinances/resolutions adopting CDD principles.	TBD	TBD
Increased community engagement in development activities.	Participation of women in local government.	Number of women representatives in targeted areas.	TBD	TBD
	Community engagement in development activities.	Percentage of MCC-funded KALAHI–CIDSS-developed community organizations that have satisfactory organizational performance ratings.	0%	80%

[4] As the municipalities are due to be randomly selected, baseline figures are not yet known.

[5] These figures are indicative.

[6] The baseline levels for these indicators will be determined by the initial round of data collection in the selected municipalities. The targets will be informed by this information and by the results of the endline data collection in KC1 areas.

[7] The precise indicators, definitions, baseline level and final targets will be determined by the initial round of data collection in the selected control and treatment municipalities. The targets will be informed by this information and by the results of the endline data collection in KC1 areas.

TABLE 1—M&E INDICATORS FOR KALAHI–CIDSS PROJECT—Continued

Result	Indicator	Definition of indicator	Baseline [4]	Year 5 [5]
		Percentage of communities that attract additional funding for development activities after the KALAHI–CIDSS Project is completed.	0%	30%
Increased value of sub-project benefits [6].	Aggregate value of benefits of sub-projects..	(Varies, please see below)	.....	.....
Outcome Level				
Increased LGU engagement	LGU provision of funds	Percentage of LGUs that provide at least 80% of Memorandum of Agreement (MOA) funding requirements.	0%	90%
	LGU provision of technical support ..	Percentage of LGUs that provide at least 80% of MOA technical support requirements.	0%	90%
Increased community engagement ...	*Barangay* assembly participation	Percentage of *barangay* assemblies with 80% of community households represented.	TBD	80%
	Marginalized group participation	Percentage of *barangay* assemblies with 65% of youth, women, indigenous people and poorest households represented.	TBD	80%
Increased value of sub-project benefits [7].	Time savings	.....	TBD	TBD
	Labor force participation (by age and gender).	.....	TBD	TBD
	School enrollment	.....	TBD	TBD
	Number of beneficiary farming households.	.....	TBD	TBD
	Yield of paddy rice	.....	TBD	TBD
	Water consumption (by use)	.....	TBD	TBD
	Use of *barangay* health facilities	.....	TBD	TBD
	Post-harvest losses	.....	TBD	TBD
Output Level				
Sub-projects delivered	Sub-projects completed	Number of completed sub-projects (by type).	0	3400
Sub-projects sustained	Sub-projects sustained	Percentage of sub-projects that pass functionality audits or receive satisfactory or higher ratings of sustainability.	0%	80%

TABLE 2—M&E INDICATORS FOR SECONDARY NATIONAL ROADS DEVELOPMENT PROJECT

Result	Indicator	Definition of indicator	Road	Baseline	Year 5	Year 20
Objective Level						
Net incomes of road users increased.	Costs to road users	Aggregate value of time savings (in 2009US$m) [8].	Wright-Taft- Borongan-Guiuan.	NA	5.2	9.5
		Change in aggregate vehicle operating cost (in 2009US$m) [9].	Wright-Taft- Borongan-Guiuan.	NA	9.4	16.5
Outcome Level						
Improved road quality	Roughness	International Roughness Index of the road segments supported by the Compact.	Wright-Taft- Borongan-Guiuan.	[10] 7.1	1.8	5.8
Increased vehicle activity	Average Annual Daily Traffic (AADT).	AADT on the road segments supported by the Compact.	Wright-Taft- Borongan-Guiuan.	1,179	1,450	2,720
Lower maintenance costs	Maintenance savings	Reduction in annual maintenance spending (in 2009US$m) [11].	Wright-Taft- Borongan-Guiuan.	NA	0.4	0.3

TABLE 2—M&E INDICATORS FOR SECONDARY NATIONAL ROADS DEVELOPMENT PROJECT—Continued

Result	Indicator	Definition of indicator	Road	Baseline	Year 5	Year 20
Output Level						
Roads rehabilitated or built.	Total length	KM of road sections completed—rehabilitated.	Wright-Taft- Borongan-Guiuan.	0	222	222

TABLE 3—M&E INDICATORS FOR REVENUE ADMINISTRATION REFORM PROJECT

Result	Indicator	Definition of indicator	Baseline	Year 5
Project-wide Indicators				
Objective Level				
Increased tax revenues over time	Tax gap	Percentage of tax potential that is actually collected (VAT only).	[12] TBD	TBD
Decreased incidence of corrupt activities within Department of Finance (DOF).	Perceptions of corruption	DOF staff and the general public's perceptions that DOF staff are engaged in corrupt activities.	TBD	TBD
		Perceptions that DOF is taking action to fight corruption.	TBD	TBD
eTIS sub-Activity				
Outcome Level				
Increased number of returns	Number of returns filed	Number of tax returns filed by individuals and corporate business at BIR Revenue District Offices that have implemented eTIS.	TBD	TBD
Corruption perceptions	Perceptions of change in incidence of corruption among BIR employees.	Perceptions of corruption as specifically related to eTIS implementation *e.g.* use of electronic audit.	TBD	TBD
Efficiency perceptions	Perceptions of organizational efficiency among BIR employees.	Perceptions of efficiency as specifically related to eTIS implementation.	TBD	TBD
Output Level				
Increased number of automatically-generated audits.	Number of audits	Automatically-generated (by eTIS) audits broken down by large taxpayer unit and RDOs that have implemented eTIS.	0	TBD
Automated Audit Tools (AATs) sub-Activity				
Outcome Level				
Increased revenue	Revenue collection per audit	Average collection per firm using Automated Audit Tools AATs (in pesos).	2,500,000	4,300,000
Output Level				
Decreased time to complete an audit	Time to complete an audit	Calendar days from start of audit to completion.	117	44
Increased percentage of audits using AATS.	Percentage of audit cases performed using AATS.	Large taxpayer unit audit cases performed using only AATS.	2.9%	100%
Reduced opportunities for discretion	Time spent at taxpayer premises per audit.	Hours to perform all audit functions needed at taxpayer premises.	335	50
Public Awareness Campaign sub-Activity				
Outcome Level				
Increased revenue	Revenue from target group	Target group to be defined based on project type.	TBD	TBD
Increased satisfaction	Taxpayer satisfaction with BIR services.	Improvement in customer satisfaction survey scores.	TBD	TBD

TABLE 3—M&E INDICATORS FOR REVENUE ADMINISTRATION REFORM PROJECT—Continued

Result	Indicator	Definition of indicator	Baseline	Year 5
Increased awareness	Perception of change based on specific message.	Awareness of the campaign, the available BIR services and/or taxpayer obligations.	TBD	TBD
RIPS Activity				
Outcome Level				
Increased number of resolved cases	Number of "successful" case resolutions (cumulative).	Number of personnel charged by RIPS who are then suspended, dismissed or convicted.	28	140
Corruption perceptions	Perceptions of corrupt activities within DOF agencies.	Perceptions among DOF staff and the general public.	TBD	TBD
Output Level				
Increased number of investigations	Number of complaints investigated (cumulative).	Number of cases opened	110	400
Decreased time to complete an investigation.	Time taken to complete investigation (average).	Days from case opened to resolution	120	60
Increased number of DOF personnel charged.	Personnel charged (cumulative)	Number of DOF personnel charged with either graft or corruption.	67	500

Note: Many of these indicators are in draft form as the development of a full set of indicators, baselines and targets is proposed as part of the eTIS sub-Activity and the Public Awareness Campaign sub-Activity. For indicators of perceptions of corruption, a baseline survey will be developed and conducted as soon as possible and the indicators and corresponding targets will be developed for relevant sub-Activities at that time.

(b) Data Collection and Reporting. The M&E Plan will establish guidelines for data collection and reporting, and identify the responsible parties. Compliance with data collection and reporting timelines will be conditions for Disbursements for the relevant Activities as set forth in the Program Implementation Agreement. The M&E Plan will specify the data collection methodologies, procedures, and analysis required for reporting on results at all levels. The M&E Plan will describe any interim MCC approvals for data collection, analysis, and reporting plans.

(c) Data Quality Reviews. As determined in the M&E Plan or as otherwise requested by MCC, the quality of the data gathered through the M&E Plan will be reviewed to ensure that data reported are as valid, reliable, and timely as resources will allow. The objective of any data quality review will be to verify the quality and the consistency of performance data across different implementation units and reporting institutions. Such data quality reviews also will serve to identify where those levels of quality are not possible, given the realities of data collection.

(d) Management Information System. The M&E Plan will describe the information system that will be used to collect data, store, process and deliver information to relevant stakeholders in such a way that the Program information collected and verified pursuant to the M&E Plan is at all times accessible and useful to those who wish to use it. The system development will take into consideration the requirement and data needs of the components of the Program, and will be aligned with existing MCC systems, other service providers, and relevant Implementing Entities.

(e) Role of MCA-Philippines. The monitoring and evaluation of this Compact spans discrete Projects and will involve a variety of governmental, non-governmental, and private sector institutions. Subject to Section 3.2(b) of the Compact, MCA-Philippines is responsible for implementation of the M&E Plan. MCA-Philippines will oversee all Compact-related monitoring and evaluation activities conducted for each of the Projects, ensuring that data from all implementing entities is consistent, accurately reported and aggregated into regular Compact performance reports as described in the M&E Plan.

4. Evaluation Component

The evaluation component of the M&E Plan will contain three types of evaluations: (a) Impact evaluations; (b) final evaluations; and (c) special studies. The evaluation component of the M&E Plan will describe the purpose of the evaluation, methodology, timeline, required MCC approvals, and the process for collection and analysis of data for each evaluation. The results of all evaluations will be made publicly available in accordance with MCC's guidelines for monitoring and evaluation plans posted from time to time on the MCC Web site (the "*MCC Policy for Monitoring and Evaluation of Compacts and Threshold Programs*").

(a) Impact Evaluation. The M&E Plan will include a description of the methods to be used for impact evaluations and plans for integrating the evaluation method into Project design. Based on in-country consultation with stakeholders, the strategies outlined below were jointly determined as having the strongest potential for rigorous impact evaluation. The M&E Plan will further outline in detail these methodologies. Final impact evaluation strategies are to be included in the M&E Plan. The following is a summary of the current impact evaluation methodology:

(i) KALAHI–CIDSS Project.

The planned impact evaluation will cover new municipalities across both MCC-supported and World Bank-supported areas. Although the final design and implementation of the impact evaluation will be contracted to an independent consultant firm, a joint advisory board, with members from MCC, MCA-Philippines, the World Bank, DSWD, the National Economic Development Agency, and local academics will oversee the impact evaluation, which will be made publically available upon completion.

MCC and the World Bank cannot provide sufficient funding for all eligible municipalities. Thus the proposed approach will randomly select some pairs of municipalities to serve as treatment and controls from the eligible list. The specific municipalities will be randomly selected

[8] These indicators are defined as the actual cost or spending minus what they were estimated to be in the without project scenario, as calculated by the model of the feasibility study.

[9] These indicators are defined as the actual cost or spending minus what they were estimated to be in the without project scenario, as calculated by the Highway Development and Management 4 model used by the feasibility study. These indicators will not be measured directly in year 5 of the Compact. Instead they will be recalculated using the same model, based on actual data on traffic, roughness, and maintenance spending (see below).

[10] This baseline is a visual estimation, not an International Roughness Index measure.

[11] These indicators are defined as the actual cost or spending minus what they were estimated to be in the without project scenario, as calculated by the model of the feasibility study.

[12] There have been several calculations of the VAT tax gap in the last 15 years and these have produced a wide range of estimates depending on the methodology employed. We are aware of no more recent estimate by the IMF than 1999, when it was estimated at 50%. The IMF will be responsible for producing a more current baseline figure for the tax gap indicator.

from that list by an independent party. Several of the Government's obligations are related to the methodology and implementation of this Impact Evaluation.

Key Impact Evaluation questions will include: How does receiving KALAHI–CIDSS support (from either the KALAHI–CIDSS Project or KC1) influence individual and community measures of:

(1) Social capital (participation in meetings, membership in groups, trust, etc);

(2) Welfare (consumption expenditure, labor force participation (including for women), hours on household production, enrollment, etc.); and

(3) The link between social capital and welfare (operations and maintenance practices, sustainability, project costs, congruence of preferences with sub-projects selected, etc.).

(ii) Secondary National Roads Development Project.

A rigorous impact evaluation is not currently planned for the Secondary National Roads Development Project due to the lengthy time of construction and the corresponding time required for the economy to adapt to the improvement.

(b) Final Evaluation. The M&E Plan will make provision for final Project level evaluations ("*Final Evaluations*"). With the prior written approval of MCC, MCA-Philippines will engage independent evaluators to conduct the Final Evaluations at the end of each Project. The Final Evaluations will review progress during Compact implementation and provide a qualitative context for interpreting monitoring data and impact evaluation findings. They must at a minimum (i) evaluate the efficiency and effectiveness of the Activities, (ii) determine if and analyze the reasons why the Compact Goal, Program Objective and Project Objective(s), outcome(s) and output(s) were or were not achieved, (iii) identify positive and negative unintended results of the Program, (iv) provide lessons learned that may be applied to similar projects, and (v) assess the likelihood that results will be sustained over time.

(c) Special Studies. The M&E Plan will include a description of the methods to be used for special studies, as necessary, funded through this Compact or by MCC. Plans for conducting the special studies will be determined jointly between MCA-Philippines and MCC before the approval of the M&E Plan. The M&E Plan will identify and make provision for any other special studies, ad hoc evaluations, and research that may be needed as part of the monitoring and evaluating of this Compact. Either MCC or MCA-Philippines may request special studies or ad hoc evaluations of Projects, Activities, or the Program as a whole prior to the expiration of the Compact Term. When MCA-Philippines engages an evaluator, the engagement will be subject to the prior written approval of MCC. Contract terms must ensure non-biased results and the publication of results.

As of the date hereof, two special studies are planned: For the KALAHI–CIDSS Project, an evaluation is planned to measure the various benefits of the sub-projects; for the Secondary National Roads Development Project, evaluations are planned to focus on measuring changes in travel times and transportation costs.

(i) Request for Ad Hoc Evaluation or Special Study. If MCA-Philippines requires an ad hoc independent evaluation or special study at the request of the Government for any reason, including for the purpose of contesting an MCC determination with respect to a Project or Activity or to seek funding from other donors, no MCC Funding or MCA-Philippines resources may be applied to such evaluation or special study without MCC's prior written approval.

5. Other Components of the M&E Plan

In addition to the monitoring and evaluation components, the M&E Plan will include the following components for the Program, Projects and Activities, including, where appropriate, roles and responsibilities of the relevant parties and providers:

(a) Costs. A detailed cost estimate for all components of the M&E Plan; and

(b) Assumptions and Risks. Any assumption or risk external to the Program that underlies the accomplishment of the Program Objective, Project Objectives and Activity outcomes and outputs. However, such assumptions and risks will not excuse any Party's performance unless otherwise expressly agreed to in writing by the Parties.

6. Approval and Implementation of the M&E Plan

The approval and implementation of the M&E Plan, as amended from time to time, will be in accordance with the Program Implementation Agreement and any other relevant supplemental agreement, and the MCC Policy for Monitoring and Evaluation of Compacts and Threshold Programs.

Annex IV Conditions to Disbursement of Compact Implementation Funding

This Annex IV sets forth the conditions precedent applicable to Disbursements of Compact Implementation Funding (each a "*CIF Disbursement*"). Capitalized terms used in this Annex IV and not defined in this Annex IV or in the Compact have the meanings assigned to such terms in the Program Implementation Agreement.

1. Conditions to the Initial CIF Disbursement

Each of the following conditions precedent must have been met to MCC's satisfaction prior to the initial CIF Disbursement:

(a) MCA-Philippines will have delivered to MCC a complete, correct, and fully executed Disbursement Request for the relevant Disbursement Period, in form and substance satisfactory to MCC and submitted in accordance with the Reporting Guidelines. Each Disbursement Request will include the following reference number: GR10PHL10010.

(b)(i) Each Activity being funded by such CIF Disbursement will facilitate implementation of the Compact, (ii) there has been no violation of, and the use of the requested funds for the purposes requested will not violate, the limitations on the use or treatment of (1) MCC Funding, as set forth in this Compact, including under Section 2.7, or (2) Compact Implementation Funding, and (iii) no material breach of any covenant, obligation, or responsibility of the Government or MCA-Philippines under this Compact, the Program Implementation Agreement, any supplemental agreement, or any Program Guidelines has occurred or is continuing.

(c) The Government will have published the Establishment Decree, and such decree will remain in full force and effect, without modification, alteration, rescission, or suspension of any kind unless otherwise agreed by MCC. Without limitation of the foregoing, MCA-Philippines will have delivered to MCC (i) evidence of the adoption and publication of the Establishment Decree, and (ii) an up-to-date extract from the state registry verifying that MCA-Philippines is a fully-formed and registered public institution under the laws of the Philippines.

(d) MCA-Philippines will be sufficiently mobilized in order for MCA-Philippines to be able to fully perform its obligations and to act on behalf of the Government.

(e) MCA-Philippines will have adopted a Procurement Plan, in form and substance satisfactory to MCC, with respect to the Compact Implementation Funding, and such Procurement Plan remains in full force and effect.

(f) MCA-Philippines will have adopted a Fiscal Accountability Plan, in form and substance satisfactory to MCC, and such Fiscal Accountability Plan remains in full force and effect.

(g) The Government will have adopted and published such decrees and regulations as necessary to implement the tax assumption mechanisms set forth in the Program Implementation Agreement, and such decrees and regulations will remain in full force and effect without modification, alteration, rescission, or suspension of any kind, unless otherwise agreed by MCC.

(h) The Fiscal Agent will have been duly appointed, and MCA-Philippines will have duly executed the Fiscal Agent Agreement, and such agreement will be in full force and effect without modification, alteration, rescission, or suspension of any kind, unless otherwise agreed by MCC, and no material breach has occurred or is continuing thereunder.

(i) The Procurement Agent will have been duly appointed, and MCA-Philippines will have duly executed an agreement with the Procurement Agent, and such agreement will be in full force and effect without modification, alteration, rescission, or suspension of any kind, unless otherwise agreed by MCC, and no material breach has occurred or is continuing thereunder.

(j) The Bank will have been duly appointed, and MCA-Philippines and the Fiscal Agent will have duly executed the Bank Agreement, and such agreement will be in full force and effect without modification, alteration, rescission, or suspension of any kind, unless otherwise agreed by MCC, and no material breach has occurred or is continuing thereunder.

(k) The Permitted Account will be established.

(l) Prior to the deployment of the resident tax administration technical assistance lead advisor, the IMF resident advisor will be designated as a senior advisor to the head of

the BIR's Project Implementation & Monitoring Office. Said resident advisor will coordinate all tax administration-related technical assistance from all donors.

2. Conditions to Each CIF Disbursement

Each of the following conditions precedent must have been met to MCC's satisfaction prior to the applicable CIF Disbursement:

(a) MCA-Philippines will have delivered to MCC a complete, correct, and fully executed Disbursement Request for the relevant Disbursement Period, together with any applicable Periodic Reports covering such Disbursement Period, in each case in form and substance satisfactory to MCC and submitted in accordance with the Reporting Guidelines. Each Disbursement Request will include the following reference number: GR10PHL10010.

(b)(i) Each Activity being funded by such CIF Disbursement will facilitate implementation of the Compact, (ii) there has been no violation of, and the use of the requested funds for the purposes requested will not violate, the limitations on the use or treatment of (1) MCC Funding, as set forth in this Compact, including under Section 2.7, or (2) Compact Implementation Funding, (iii) no material breach of any covenant, obligation, or responsibility of the Government or MCA-Philippines under this Compact, the Program Implementation Agreement, any supplemental agreement, or any Program Guidelines has occurred or is continuing, and (iv) any Taxes and Contributions paid with MCC Funding prior to or on the date ninety (90) days prior to the start of the applicable Disbursement Period have been assumed by the Government in full in accordance with this Compact.

(c) The MCA-Philippines Procurement Plan will be in full force and effect.

(d) The MCA-Philippines Fiscal Accountability Plan will be in full force and effect.

(e) Each of the Fiscal Agent Agreement, the MCA-Philippines agreement with the Procurement Agent, and the Bank Agreement will be in full force and effect without modification, alteration, rescission, or suspension of any kind, unless otherwise agreed by MCC, and no material breach has occurred or is continuing thereunder.

(f) The Permitted Account will be in existence.

(g) The tax assumption mechanism set forth in the Program Implementation Agreement will be in full force and effect.

Annex V Definitions

Activity has the meaning provided in Part B of Annex I.

Additional Representative has the meaning provided in Section 4.2.

Audit Guidelines has the meaning provided in Section 3.8(a).

Baseline has the meaning provided in paragraph 3 of Annex III.

BIR has the meaning provided in paragraph 3(a) of Part B of Annex I.

Board of Trustees has the meaning provided in paragraph 4(c)(i)(1) of Part B of Annex I.

CIF Disbursement has the meaning provided in Annex IV.

Compact has the meaning provided in the Preamble.

Compact Goal has the meaning provided in Section 1.1.

Compact Implementation Funding has the meaning provided in Section 2.2(a).

Compact Records has the meaning provided in Section 3.7(a).

Compact Term has the meaning provided in Section 7.3.

Covered Provider has the meaning provided in Section 3.7(c).

Disbursement has the meaning provided in Section 2.4.

DSWD has the meaning provided in Section 8.1(a)(i).

Establishment Decree has the meaning provided in Section 3.2(b).

eTIS has the meaning provided in paragraph 3(b) of Part B of Annex I.

Evaluation Component has the meaning provided in paragraph 1 of Annex III.

Excess CIF Amount has the meaning provided in Section 2.2(d).

Final Evaluations has the meaning provided in paragraph 4(b) of Annex III.

Fiscal Agent has the meaning provided in paragraph 4(e) of Part B of Annex I.

Governance Guidelines has the meaning provided in paragraph 4(c) of Part B of Annex I.

Government has the meaning provided in the Preamble.

IMF has the meaning provided in paragraph 3(b)(i)(1) of Part B of Annex I.

Implementation Letter has the meaning provided in Section 3.5.

Implementing Entity has the meaning provided paragraph 4(d) of Part B of Annex I.

Implementing Entity Agreement has the meaning provided in paragraph 4(d) of Part B of Annex I.

Indicators has the meaning provided in paragraph 3(a) of Annex III.

Inspector General has the meaning provided in Section 3.8(a).

KALAHI–CIDSS has the meaning provided in paragraph 1(a) of Part B of Annex I.

KALAHI–CIDSS Project has the meaning provided in paragraph 1(a) of Part B of Annex I.

KC1 has the meaning provided in paragraph 1(a) of Part B of Annex I.

M&E Annex has the meaning provided in Annex III.

M&E Plan has the meaning provided in Annex III.

Management Unit has the meaning provided in paragraph 4(c)(iii)(1) of Part B of Annex I.

MCA Act has the meaning provided in Section 2.2(a).

MCA-Philippines has the meaning provided in Section 3.2(b).

MCA-Philippines Bylaws has the meaning provided in paragraph 4(c) of Part B of Annex I.

MCC has the meaning provided in the Preamble.

MCC Environmental Guidelines has the meaning provided in Section 2.7(c).

MCC Funding has the meaning provided in Section 2.3.

MCC Policy for Monitoring and Evaluation of Compacts and Threshold Programs has the meaning provided for in paragraph 4 of Annex III.

MCC Program Procurement Guidelines has the meaning provided in Section 3.6.

MCC Web site has the meaning provided in Section 2.7.

Monitoring Component has the meaning provided in paragraph 1 of Annex III.

Multi-Year Financial Plan Summary has the meaning provided in paragraph 1 of Annex II.

OP 4.12 has the meaning provided in paragraph 3 of Part A of Annex I.

Party and *Parties* has the meaning provided in the Preamble.

Permitted Account has the meaning provided in Section 2.4.

The *Philippines* has the meaning provided in the Preamble.

Principal Representative has the meaning provided in Section 4.2.

Procurement Agent has the meaning provided in paragraph 4(f) of Part B of Annex I.

Program has the meaning provided in the Preamble.

Program Assets include MCC Funding, interest accrued thereon, and any assets, goods or property (real, tangible or intangible) purchased or financed in whole or in part (directly or indirectly) by MCC Funding.

Program Funding has the meaning provided in Section 2.1.

Program Guidelines means collectively the Audit Guidelines, the MCC Environmental Guidelines, the Governance Guidelines, the MCC Program Procurement Guidelines, the Reporting Guidelines, the MCC Policy for Monitoring and Evaluation of Compacts and Threshold Programs, and any other guidelines, policies or guidance papers from time to time published on the MCC Web site.

Program Implementation Agreement or *PIA* has the meaning provided in Section 3.1.

Program Objective has the meaning provided in Section 1.2.

Project(s) has the meaning provided in Section 6.2(b).

Project Objective(s) has the meaning provided in Section 1.3.

Provider has the meaning provided in Section 3.7(c).

Reporting Guidelines means the MCC "Guidance on Quarterly MCA Disbursement Request and Reporting Package" posted by MCC on the MCC Web site or otherwise publicly made available.

Revenue Administration Reform Project has the meaning provided in paragraph 3(b) of Part B of Annex I.

RIPS has the meaning provided in paragraph 3(b) of Part B of Annex I.

Secondary National Roads Development Project has the meaning provided in paragraph 2(b) of Part B of Annex I.

Stakeholders' Committee has the meaning provided in paragraph 4(c)(ii)(1) of Part B of Annex I.

Target has the meaning provided in paragraph 3(a) of Annex III.

Taxes and Contributions has the meaning provided in Section 2.8.

United States Dollars or *US$* means the lawful currency of the United States of America.

USAID has the meaning provided in paragraph 1(e) of Part B of Annex I.

[FR Doc. 2010–24820 Filed 10–1–10; 8:45 am]

BILLING CODE 9211–03–P

MILLENNIUM CHALLENGE CORPORATION

[MCC FR 10–12]

Report on the Selection of Eligible Countries for Fiscal Year 2011

AGENCY: Millennium Challenge Corporation.

ACTION: Notice.

SUMMARY: This report is provided in accordance with section 608(d)(1) of the Millennium Challenge Act of 2003, Public Law 108–199, Division D, (the "Act"), 22 U.S.C. 7708(d)(1).

Dated: September 28, 2010.

Melvin F. Williams, Jr.,

VP/General Counsel and Corporate Secretary, Millennium Challenge Corporation.

Report on the Criteria and Methodology for Determining the Eligibility of Candidate Countries for Millennium Challenge Account Assistance for Fiscal Year 2011

This report to Congress is provided in accordance with section 608(b) of the Millennium Challenge Act of 2003, as amended, 22 U.S.C. 7707(b) (the "Act").

The Act authorizes the provision of Millennium Challenge Account (MCA) assistance to countries that enter into a Millennium Challenge Compact with the United States to support policies and programs that advance the prospects of such countries achieving lasting economic growth and poverty reduction. The Act requires the Millennium Challenge Corporation (MCC) to take a number of steps in determining what countries will be selected as eligible for MCA compact assistance for fiscal year 2011 (FY11) based on the countries' demonstrated commitment to just and democratic governance, economic freedom, and investing in their people, as well as MCC's opportunity to reduce poverty and generate economic growth in the country. These steps include the submission of reports to the congressional committees specified in the Act and publication of notices in the **Federal Register** that identify:

The countries that are "candidate countries" for MCA assistance for FY11 based on their per capita income levels and their eligibility to receive assistance under U.S. law. This report also identifies countries that would be candidate countries but for specified legal prohibitions on assistance (section 608(a) of the Act; 22 U.S.C. 7707(a));

The criteria and methodology that MCC's Board of Directors (Board) will use to measure and evaluate the policy performance of the candidate countries consistent with the requirements of section 607 of the Act (22 U.S.C. 7706) in order to determine "MCA eligible countries" from among the "candidate countries" (section 608(b) of the Act); and

The list of countries determined by the Board to be "MCA eligible countries" for FY11, with justification for eligibility determination and selection for compact negotiation, including with which of the MCA eligible countries the Board will seek to enter into MCA compacts (section 608(d) of the Act).

This report is the second of the three required reports listed above.

Criteria and Methodology for FY11

The Board will base its selection of eligible countries on several factors including:

The country's overall performance in three broad policy categories—Ruling Justly, Encouraging Economic Freedom, and Investing in People; MCC's opportunity to reduce poverty and generate economic growth in a country; and Availability of funds to MCC.

Performance of Policy Categories

Section 607 of the Act requires that the Board's determination of eligibility be based "to the maximum extent possible, upon objective and quantifiable indicators of a country's demonstrated commitment" to the criteria set out in the Act. For FY11, there will be two groups of candidate countries—low income countries (LIC) and lower middle income countries (LMIC). As outlined in MCC's *Report on Countries that are Candidate Countries for Millennium Challenge Account Eligibility for Fiscal Year 2011 and Countries that would be Candidates but or Legal Prohibitions* (August 2010), LIC candidates are those countries that have a per capita income equal to or less than $1,905 and are not ineligible to receive United States economic assistance under part I of the Foreign Assistance Act of 1961 by reason of the application of any provision of the Foreign Assistant Act or any other provision of law. LMIC candidates are those countries that have a per capita income between $1,906 and $3,945 and are not ineligible to receive United States economic assistance under the same stipulations.

The Board uses seventeen indicators to assess the policy performance of individual countries (specific definitions of the indicators and their sources are set out in the attached Annex A). These indicators are grouped for purposes of the FY11 assessment methodology under the three policy categories listed below.

Ruling Justly

Civil Liberties
Political Rights
Voice and Accountability
Government Effectiveness
Rule of Law
Control of Corruption

Encouraging Economic Freedom

Inflation
Fiscal Policy
Business Start-up
Trade Policy
Regulatory Quality
Land Rights Access

Investing in People

Public Expenditure on Health
Public Expenditure on Primary Education
Immunization Rates
Girls' Primary Education Completion
Natural Resource Management

In making its determination of eligibility with respect to a particular candidate country, the Board will consider whether a country performs above the median in relation to its income level peers (LIC or LMIC) on at least three of the indicators in each of the *Ruling Justly, Encouraging Economic Freedom,* and *Investing in People* categories, and above the median on the *Control of Corruption* indicator. One exception to this methodology is that the median is not used for the *Inflation* indicator. Instead, to pass the *Inflation* indicator a country's inflation rate must be under a fixed ceiling of 15 percent. The Board may also take into consideration whether a country performs substantially below the median on any indicator (*i.e.,* below the 25th percentile) and has not taken appropriate measures to address this shortcoming.

Approach to Income Classification Transition

Each year a number of countries shift income groups, and some countries formerly classified as LICs suddenly face new, higher performance standards in the LMIC group. As a result, they typically perform relatively worse as an LMIC, even if they performed relatively well as an LIC, and maintained or improved performance over the previous year in absolute terms. To address the challenges associated with sudden changes in performance standards for these countries, MCC has adopted an approach to income category

transition whereby the Board may consider the indicator performance of countries that transitioned from the LIC to the LMIC category both relative to their LMIC peers, as well as in comparison to the current fiscal year's LIC pool for a period of three years.

Supplemental Information

While the indicators are the predominant basis for determining which countries will be eligible for MCA assistance, it is consistent with the Act for the Board to exercise discretion when evaluating performance on the indicators and determining a final list of eligible countries. The Board may take into account other quantitative and qualitative information (supplemental information) to determine whether a country performed satisfactorily in relation to its peers in a given income category. Such supplemental information is important because there are elements of the eligibility criteria set out in the Act for which there is either limited quantitative information (*e.g.,* the rights of people with disabilities) or no well-developed performance indicator. Until such data and/or indicators are developed, the Board may rely on additional data and qualitative information to assess policy performance. For example, the State Department Human Rights Report contains qualitative information to make an assessment on a variety of criteria outlined by Congress, such as the rights of people with disabilities, the treatment of women and children, workers rights, and human rights.

Supplemental information is also important because it makes up for data gaps, lags, trends, or other weaknesses in particular indicators. For example, the median score (and passing threshold) for the *Girls' Primary Education Completion* indicator in the LMIC group has historically been very high. Recognizing that this may pose limitations on the indicator's ability to meaningfully differentiate policy performance, the Board may consider that a girls' primary education completion rate above 95 percent essentially represents full completion, regardless of where the median score for this indicator falls. As additional information in the area of corruption, the Board may consider how a country is evaluated by supplemental sources like Transparency International's Corruption Perceptions Index and the Global Integrity Report, among others, as well as on the defined indicator.

Consideration for Subsequent Compacts

Countries nearing the end of compact implementation may be considered for eligibility for a second compact. In determining eligibility for a second compact, the Board will consider, among other factors, the country's policy performance using the methodology and criteria described above and the country's track record of performance implementing its first compact. To assess implementation of a first compact, the Board will consider the nature of the country partnership with MCC, the degree to which the country has demonstrated a commitment and capacity to achieve program results, and the degree to which the country has implemented the compact in accordance with MCC's policies and standards.

Continuing Policy Performance

Partner countries that are developing or implementing a compact are expected to seek to maintain and improve policy performance. MCC recognizes that partner countries may not meet the indicator criteria from time to time due to a number of factors, such as changes in the peer-group median; transition into a new income category (*e.g.,* from LIC to LMIC); numerical declines in score that are within the statistical margin of error; slight declines in policy performance; revisions or corrections of data; the introduction of new sub-data sources; or changes in the indicators used in measuring performance. None of these factors alone signifies a significant policy reversal or warrants suspension or termination of eligibility and/or assistance.

However, MCC may issue a warning, suspension, or termination of eligibility and/or assistance to countries that demonstrate a significant policy reversal. According to MCC's authorizing legislation, "[a]fter consultation with the Board, the Chief Executive Officer may suspend or terminate assistance in whole or in part for a country or entity * * * if * * * the country or entity has engaged in a pattern of actions inconsistent with the criteria used to determine the eligibility of the country or entity * * *." Because of data lags, this pattern of actions need not be captured in the indicators for MCC to take action.

Consideration of Changes to the Criteria and Methodology

For FY11, there are no changes to the core criteria or methodology used in FY10.

In keeping with MCC's commitment to aid effectiveness through regular evaluation of its own practice, MCC is undertaking a comprehensive review of its country selection process. At the time the selection system was established, MCC's country scorecard represented the most effective way to use third-party data to compare policy performance as objectively as possible across the broad majority of low and lower middle income countries. After using this system for six years, MCC believes it is appropriate to undertake a review to ensure that the most effective indicator system is being used to evaluate and select countries for eligibility. While the review may find that MCC should make no changes to the selection system, it may, alternatively, identify recommended adjustments. Any such adjustments could be implemented as part of the fiscal year 2012 selection process.

The selection review is in its early stages and planned to extend through mid-2011. The review will include consultations with a broad range of stakeholders and experts in the development community. As a first step, MCC encourages broad participation in the formal public comment period that follows the publication of this report and lasts until December 15.

Relationship to Statutory Criteria

Within each policy category, the Act sets out a number of specific selection criteria. As indicated above, a set of objective and quantifiable policy indicators is used in determining eligibility for MCA assistance and in measuring the relative performance by candidate countries against these criteria. Performance against each of these criteria is assessed by at least one of the seventeen objective indicators and some criteria are addressed by multiple indicators. The following list of the criteria set forth in the Act identifies in parentheses the corresponding indicators.

Section 607(b)(1): Just and democratic governance, including a demonstrated commitment to—

(A) Promote political pluralism, equality and the rule of law (*Political Rights, Civil Liberties, Voice and Accountability, and Rule of Law*);

(B) Respect human and civil rights, including the rights of people with disabilities (*Political Rights, Civil Liberties, and Voice and Accountability*);

(C) Protect private property rights (*Civil Liberties, Regulatory Quality, Rule of Law, and Land Rights and Access*);

(D) Encourage transparency and accountability of government (*Political Rights, Civil Liberties, Voice and Accountability, Control of Corruption, Rule of Law, and Government Effectiveness*); and

(E) Combat corruption (*Political Rights, Civil Liberties, Rule of Law, and Control of Corruption*).

Section 607(b)(2): Economic freedom, including a demonstrated commitment to economic policies that—

(A) Encourage citizens and firms to participate in global trade and international capital markets (*Fiscal Policy, Inflation, Trade Policy, and Regulatory Quality*);

(B) Promote private sector growth (*Inflation, Business Start-Up, Fiscal Policy, Land Rights and Access, and Regulatory Quality*);

(C) Strengthen market forces in the economy (*Fiscal Policy, Inflation, Trade Policy, Business Start-Up, Land Rights and Access, and Regulatory Quality*); and

(D) Respect worker rights, including the right to form labor unions (*Civil Liberties and Voice and Accountability*).

Section 607(b)(3): Investments in the people of such country, particularly women and children, including programs that—

(A) Promote broad-based primary education (*Girls' Primary Education Completion and Public Expenditure on Primary Education*);

(B) Strengthen and build capacity to provide quality public health and reduce child mortality (*Immunization Rates, Public Expenditure on Health, and Natural Resource Management*); and

(C) Promote the protection of biodiversity and the transparent and sustainable management and use of natural resources (*Natural Resource Management*).

Annex A

Indicator Definitions

The following 17 indicators will be used in measuring candidate countries' demonstrated commitment to the criteria set forth in section 607(b) of the Act. The indicators are intended to assess the degree to which the political and economic conditions in a country serve to promote broad-based sustainable economic growth and reduction of poverty, and thus provide a sound environment for the use of MCA funds. The indicators are not goals in themselves; rather they are proxy measures of policies that are linked to broad-based sustainable economic growth. The indicators were selected based on their (i) Relationship to economic growth and poverty reduction; (ii) the number of countries they cover; (iii) transparency and availability; and (iv) relative soundness and objectivity. Where possible, the indicators are developed by independent sources.

Ruling Justly

Civil Liberties: Independent experts rate countries on: Freedom of expression; association and organizational rights; rule of law and human rights; and personal autonomy and economic rights, among other things. *Source: Freedom House.*

Political Rights: Independent experts rate countries on: The prevalence of free and fair elections of officials with real power; the ability of citizens to form political parties that may compete fairly in elections; freedom from domination by the military, foreign powers, totalitarian parties, religious hierarchies and economic oligarchies; and the political rights of minority groups, among other things. *Source: Freedom House.*

Voice and Accountability: An index of surveys and expert assessments that rate countries on: The ability of institutions to protect civil liberties; the extent to which citizens of a country are able to participate in the selection of governments; and the independence of the media, among other things. *Source: Worldwide Governance Indicators (World Bank/Brookings Institution).*

Government Effectiveness: An index of surveys and expert assessments that rate countries on: The quality of public service provision; civil servants' competency and independence from political pressures; and the government's ability to plan and implement sound policies, among other things. *Source: Worldwide Governance Indicators (World Bank/Brookings Institution).*

Rule of Law: An index of surveys and expert assessments that rate countries on: The extent to which the public has confidence in and abides by the rules of society; the incidence and impact of violent and nonviolent crime; the effectiveness, independence, and predictability of the judiciary; the protection of property rights; and the enforceability of contracts, among other things. *Source: Worldwide Governance Indicators (World Bank/Brookings Institution).*

Control of Corruption: An index of surveys and expert assessments that rate countries on: "Grand corruption" in the political arena; the frequency of petty corruption; the effects of corruption on the business environment; and the tendency of elites to engage in "state capture," among other things. *Source: Worldwide Governance Indicators (World Bank/Brookings Institution).*

Encouraging Economic Freedom

Inflation: The most recent average annual change in consumer prices. *Source: The International Monetary Fund's World Economic Outlook Database.*

Fiscal Policy: The overall budget balance divided by GDP, averaged over a three-year period. The data for this measure come primarily from IMF country reports or, where public IMF data are outdated or unavailable, are provided directly by the recipient government with input from U.S. missions in host countries. All data are cross-checked with the IMF's World Economic Outlook database to try to ensure consistency across countries and made publicly available. *Source: International Monetary Fund Country Reports, National Governments, and the International Monetary Fund's World Economic Outlook Database.*

Business Start-Up: An index that rates countries on the time and cost of complying with all procedures officially required for an entrepreneur to start up and formally operate an industrial or commercial business. *Source: International Finance Corporation.*

Trade Policy: A measure of a country's openness to international trade based on weighted average tariff rates and non-tariff barriers to trade. *Source: The Heritage Foundation.*

Regulatory Quality: An index of surveys and expert assessments that rate countries on: the burden of regulations on business; price controls; the government's role in the economy; and foreign investment regulation, among other areas. *Source: Worldwide Governance Indicators (World Bank/Brookings Institution).*

Land Rights and Access: An index that rates countries on the extent to which the institutional, legal, and market framework provide secure land tenure and equitable access to land in rural areas and the time and cost of property registration in urban and peri-urban areas. *Source: The International Fund for Agricultural Development and the International Finance Corporation.*

Investing in People

Public Expenditure on Health: Total expenditures on health by government at all levels divided by GDP. *Source: The World Health Organization.*

Immunization Rates: The average of DPT3 and measles immunization coverage rates for the most recent year available. *Source: The World Health Organization and the United Nations Children's Fund.*

Total Public Expenditure on Primary Education: Total expenditures on

primary education by government at all levels divided by GDP. *Source: The United Nations Educational, Scientific and Cultural Organization and National Governments.*

Girls' Primary Completion Rate: The number of female students enrolled in the last grade of primary education minus repeaters divided by the population in the relevant age cohort (gross intake ratio in the last grade of primary). *Source: United Nations Educational, Scientific and Cultural Organization.*

Natural Resource Management: An index made up of four indicators: eco-region protection, access to improved water, access to improved sanitation, and child (ages 1–4) mortality. *Source: The Center for International Earth Science Information Network and the Yale Center for Environmental Law and Policy.*

[FR Doc. 2010–24727 Filed 10–1–10; 8:45 am]

BILLING CODE 9211–03–P

NATIONAL AERONAUTICS AND SPACE ADMINISTRATION

[Notice (10–116)]

Aerospace Safety Advisory Panel; Meeting

AGENCY: National Aeronautics and Space Administration (NASA).

ACTION: Notice of meeting.

SUMMARY: In accordance with the Federal Advisory Committee Act, Public Law 92–463, as amended, the National Aeronautics and Space Administration announces a forthcoming meeting of the Aerospace Safety Advisory Panel.

DATES: Friday, October 22, 2010, 12:30 p.m. to 2 p.m. Central Standard Time.

ADDRESSES: Johnson Space Center, NASA Road 1, Building 1, Room 966, Houston, TX 77058.

FOR FURTHER INFORMATION CONTACT: Ms. Kathy Dakon, Aerospace Safety Advisory Panel Executive Director, National Aeronautics and Space Administration, Washington, DC 20546, (202) 358–0732.

SUPPLEMENTARY INFORMATION: The Aerospace Safety Advisory Panel will hold its fourth Quarterly Meeting for 2010. This discussion is pursuant to carrying out its statutory duties for which the Panel reviews, identifies, evaluates, and advises on those program activities, systems, procedures, and management activities that can contribute to program risk. Priority is given to those programs that involve the safety of human flight. The agenda will include Safety and Mission Assurance Issues, Safely De-Orbiting the International Space Station, and Inspector General Study: Astronaut Health Update. The meeting will be open to the public up to the seating capacity of the room. Seating will be on a first-come basis. Attendees will be required to sign a visitor's register and to comply with NASA security requirements, including the presentation of a valid picture ID, before receiving an access badge. Foreign nationals attending the meeting will be required to provide the following information no less than 7 working days prior to the meeting: Full name; gender; date/place of birth; citizenship; visa/green card information (number, type, expiration date); passport information (number, country, expiration date); employer/affiliation information (name of institution, address, country, telephone); and title/position of attendee. Additional information may be requested. This would also include Legal Permanent Resident information: Green card number and expiration date. To expedite admittance, attendees with U.S. citizenship can provide identifying information 2 working days in advance. Persons with disabilities who require assistance should indicate this. Photographs will only be permitted during the first 10 minutes of the meeting. During the first 30 minutes of the meeting, members of the public may make a 5-minute verbal presentation to the Panel on the subject of safety in NASA. Any member of the public is permitted to file a written statement with the Panel at the time of the meeting. Verbal presentations and written comments should be limited to the subject of safety in NASA and should be received 2 working days in advance. It is imperative that the meeting be held on this date to accommodate the scheduling priorities of the key participants. To reserve a seat, file a written statement, or make a verbal presentation, please contact Ms. Susan Burch via e-mail at *Susan.Burch@nasa.gov.*

Dated: September 28, 2010.

P. Diane Rausch,

Advisory Committee Management Officer, National Aeronautics and Space Administration.

[FR Doc. 2010–24753 Filed 10–1–10; 8:45 am]

BILLING CODE P

NUCLEAR REGULATORY COMMISSION

[Docket No. 50–458; NRC–2010–0315]

Entergy Operations, Inc.; River Bend Station, Unit 1; Environmental Assessment and Finding of No Significant Impact

The U.S. Nuclear Regulatory Commission (NRC) is considering changes to the Emergency Plan, pursuant to 10 CFR 50.54, "Conditions of licenses," paragraph (q), for Facility Operating License No. DPF–47, issued Entergy Operations, Inc. (Entergy, the licensee), for operation of the River Bend Station, Unit 1 (RBS), located in West Feliciana Parish, Louisiana. In accordance with 10 CFR 51.21, the NRC performed an environmental assessment. Based on the results of the environmental assessment, the NRC is issuing a finding of no significant impact.

Environmental Assessment

Identification of the Proposed Action

The guidance in NUREG–0654/FEMA–REP–1, Table B–1, "Minimum Staffing Requirements for NRC Licensees for Nuclear Power Plant Emergencies," for repair and corrective actions states that two individuals, one Mechanical Maintenance/Radwaste Operator and one Electrical Maintenance/Instrumentation and Control (I&C) technician, should be designated for each shift, but their functions may be carried out by shift personnel assigned other duties. The licensee is committed to the guidance in NUREG–0654, but has requested a deviation. Specifically, the proposed action would revise Section 13.3.4.2.2.4, "Plant Systems Engineering, Repair, and Corrective Actions," and Table 13.3–17, "Shift Staffing and Augmentation Capabilities," of the RBS Emergency Plan (E-Plan). The revision will allow two maintenance positions on shift to be filled with any combination of the three maintenance craft disciplines. Currently, Table 13.3–17 of the E-Plan only allows Electrical or I&C technicians to fill these two positions.

The proposed action is in accordance with the licensee's application dated January 28, 2010 (Agencywide Documents Access and Management System (ADAMS) Accession No. ML100320044).

The Need for the Proposed Action

The proposed change will allow the required shift complement of two technicians to be any combination from the three maintenance groups. Since the

repair and corrective action function is currently filled by I&C technicians, additional actions will be taken to ensure basic electrical/l&C tasks can be performed by Mechanical Maintenance personnel. Mechanical Maintenance personnel will receive training in basic electrical and I&C tasks to ensure that tasks related to these disciplines can be performed if needed in the first 90 minutes of an event. The proposed change will reduce the burden related to scheduling of only selected maintenance technicians on shift.

The NRC staff has concluded that the proposed change will provide greater initial coverage than the NUREG–0654/FEMA–REP–1, Table B–1 requirement and will continue to provide maintenance support capability in the early stages of an event. Based on the on-shift staffing complement designated in the proposed E-Plan change for Repair and Corrective Actions (which is in excess of Table B–1 of NUREG–0654/FEME–REP–1) and the training that will be provided to the Mechanical Maintenance personnel in basic electrical and I&C tasks, the NRC staff believes that adequate on-shift resources exist to support Repair and Corrective Actions within 90 minutes of an event, prior to being relieved by the augmenting Emergency Response Organization.

In addition, the proposed changes to the on-shift and 90-minute augmented I&C Maintenance staffing result in a total of nine personnel designated for Repair and Corrective actions which is in excess of NUREG–0654/FEMA–REP–1, Table B–1's minimum staffing guidance. This will increase the licensee's capability to perform the Repair and Corrective actions during an event.

Based on the above, the NRC staff concludes that the proposed changes to the E-Plan meet the standards of 10 CFR 50.47(b) and the requirements of Appendix E to 10 CFR part 50 and provide reasonable assurance that the licensee will take adequate protective measures in a radiological emergency.

Environmental Impacts of the Proposed Action

The NRC has completed its environmental assessment of the proposed changes to the RBS E-Plan. The staff has concluded that the changes would not significantly affect plant safety and would not have a significant adverse effect on the probability of an accident occurring. The proposed action would not result in an increased radiological hazard beyond those previously analyzed in the Updated Safety Analysis Report. There will be no change to radioactive effluents that affect radiation exposures to plant workers and members of the public. No changes will be made to plant buildings or the site property. Therefore, no changes or different types of radiological impacts are expected as a result of the proposed changes.

The proposed action does not result in changes to land use or water use, or result in changes to the quality or quantity of non-radiological effluents. No changes to the National Pollution Discharge Elimination System permit are needed. No effects on the aquatic or terrestrial habitat in the vicinity or the plant, or to threatened, endangered, or protected species under the Endangered Species Act, or impacts to essential fish habitat covered by the Magnuson-Stevens Act are expected. There are no impacts to the air or ambient air quality. There are no impacts to historical and cultural resources. There would be no noticeable effect on socioeconomic conditions in the region. Therefore, no changes or different types of non-radiological environmental impacts are expected as a result of the proposed action. Accordingly, the NRC concludes that there are no significant environmental impacts associated with the proposed action.

The details of the NRC staff's safety evaluation will be provided with the license amendment that will be issued to the licensee approving the E-Plan changes.

Environmental Impacts of the Alternatives to the Proposed Action

As an alternative to the proposed action, the staff considered denial of the proposed action (*i.e.,* the "no-action" alternative). Denial of the application would result in no change in current environmental impacts. The environmental impacts of the proposed action and the alternative action are similar.

Alternative Use of Resources

The action does not involve the use of any different resources than those previously considered in the Final Environmental Statement for the RBS, dated January 1985.

Agencies and Persons Consulted

In accordance with its stated policy, on September 21, 2010, the NRC staff consulted with the Louisiana State official, Ms. Ji Wiley, of the Louisiana Emergency and Radiological Services Division, Louisiana Department of Environmental Quality, regarding the environmental impact of the proposed action. The State official had no comments.

Finding of No Significant Impact

On the basis of the environmental assessment, the NRC concludes that the proposed action will not have a significant effect on the quality of the human environment. Accordingly, the NRC has determined not to prepare an environmental impact statement for the proposed action.

For further details with respect to the proposed action, see the licensee's letter dated January 28, 2010. Documents may be examined, and/or copied for a fee, at the NRC's Public Document Room (PDR), located at One White Flint North, Public File Area O1 F21, 11555 Rockville Pike (first floor), Rockville, Maryland. Publicly available records will be accessible electronically from the ADAMS Public Electronic Reading Room on the Internet at the NRC Web site, *http://www.nrc.gov/reading-rm/adams.html.* Persons who do not have access to ADAMS or who encounter problems in accessing the documents located in ADAMS should contact the NRC PDR Reference staff by telephone at 1–800–397–4209 or 301–415–4737, or send an e-mail to *pdr.resource@nrc.gov.*

Dated at Rockville, Maryland this 28th day of September 2010.

For the Nuclear Regulatory Commission.

Alan B. Wang,

Project Manager, Plant Licensing Branch IV, Division of Operating Reactor Licensing, Office of Nuclear Reactor Regulation.

[FR Doc. 2010–24808 Filed 10–1–10; 8:45 am]

BILLING CODE 7590–01–P

NUCLEAR REGULATORY COMMISSION

[Docket No. 50–020; NRC–2010–0313]

Massachusetts Institute of Technology: Massachusetts Institute of Technology Research Reactor Environmental Assessment and Finding of No Significant Impact

The U.S. Nuclear Regulatory Commission (NRC, the Commission) is considering issuance of a renewed Facility Operating License No. R–37, to be held by the Massachusetts Institute of Technology (MIT, the licensee), which would authorize continued operation of the Massachusetts Institute of Technology Research Reactor (MITR–II, the facility), located in Cambridge, Middlesex County, Massachusetts. Therefore, as required by Title 10 of the Code of Federal Regulations (10 CFR) 51.21, the NRC is issuing this Environmental Assessment (EA) and Finding of No Significant Impact.

Environmental Assessment

Identification of the Proposed Action

The proposed action would renew Facility Operating License No. R–37 for a period of twenty years from the date of issuance of the renewed license and increase the maximum licensed power level from 5 megawatts thermal (MW(t)) to 6 MW(t). The proposed action is in accordance with the licensee's application dated July 8, 1999, as supplemented by letters dated February 10 and May 8, 2000, January 29, 2004, July 5 and October 11, 2006, January 26, 2007, February 22, May 29, August 15, August 21, August 26, October 6, October 7 and December 1, 2008, May 26, August 27, October 5, October 9 and November 19, 2009, and March 30, August 6 and August 26, 2010. In accordance with 10 CFR 2.109, the existing license remains in effect until the NRC takes final action on the renewal application.

Need for the Proposed Action

The proposed action is needed to allow the continued operation of the MITR–II to routinely provide teaching, research, and services to numerous institutions for a period of twenty years. The proposed action is also needed to enhance the facility's experiment capabilities by increasing the maximum neutron flux in the experiment facilities.

Environmental Impacts of the Proposed Action

The NRC staff has completed its safety evaluation of the proposed action to issue a renewed Facility Operating License No. R–37 to allow continued operation of the MITR for a period of twenty years at an increased power level of 6 MW(t) and concludes there is reasonable assurance that the MITR–II will continue to operate safely for the additional period of time at the increased licensed power level. The details of the NRC staff's safety evaluation will be provided with the renewed license that will be issued as part of the letter to the licensee approving the license renewal application. This document contains the environmental assessment of the proposed action.

The MITR–II is located on the MIT campus and is a part of the MIT Nuclear Reactor Laboratory. The reactor is housed in a dedicated building constructed primarily of reinforced concrete and steel which serves as a containment. The reactor site comprises the reactor building and a small area immediately surrounding it, bounded by a chain-link fence, and a portion of an attached multipurpose academic building. Adjacent to the site are an industrial building to the north, a parking lot and warehouse building to the east, a warehouse building to the south, and academic and dormitory buildings to the west. According to the licensee, the nearest point of normal public occupancy is on Albany Street, approximately 21 meters (68 feet) northwest of the reactor building, the nearest dormitories are located approximately 100 meters (330 feet) west of the reactor, and the nearest non-MIT residence is approximately 250 meters (820 feet) from the reactor building.

The MITR–II is a tank-type, light-water-cooled and heavy-water-moderated research reactor that will be licensed to operate at a maximum steady-state power level of 6 MW(t). The core is located at the bottom of an aluminum tank surrounded by a heavy water reflector tank and a concrete biological shield. The reactor is fueled with plate-type, aluminum-clad fuel arranged in a compact core. A detailed description of the reactor can be found in the MITR–II Safety Analysis Report (SAR).

There have been no major modifications to the Facility Operating License since Amendment No. 10, dated July 23, 1975, which approved operation of a modified reactor core at a maximum power level of 5 MW(t). In connection with Amendment No. 10, the NRC staff evaluated the potential for environmental impacts associated with operation of the MITR–II. Based on that evaluation, the NRC staff concluded that there would be no significant environmental impact associated with licensing the MITR–II to operate at a maximum power level of 5 MW(t).

The licensee requested a change in the facility operating conditions as part of the renewal request. Specifically, the licensee requested an increase in the licensed maximum steady-state power level. This change should not affect the types of effluents released off site. There may be an increase in the quantity of gaseous effluents released offsite due to the increase in maximum power level. As discussed in this EA, off site concentrations of airborne radioactive material and potential radiation doses should continue to be a small fraction of the limits established in 10 CFR Part 20. The licensee has systems in place for controlling the release of radiological effluents and implements a radiation protection program to monitor personnel exposures and releases of radioactive effluents. As discussed in the NRC staff's safety evaluation, the systems and radiation protection program are appropriate for the types and quantities of effluents expected to be generated by continued operation of the reactor at the increased power level. Accordingly, there should be no significant increase in routine occupational or public radiation exposure as a result of license renewal or the increase in maximum power level. As discussed in the NRC staff's safety evaluation, the proposed action will not significantly increase the probability of accidents. The proposed action may increase the consequences of accidents. Specifically, the increase in maximum steady-state power level may increase the fission product source term and potential occupational and public accident doses for the maximum hypothetical accident. As discussed in the NRC staff's safety evaluation, the worst case fission product source term will not result in occupational doses or doses to members of the general public in excess of the limits specified by 10 CFR part 20. Therefore, the proposed action should not significantly change the environmental impact of facility operation. The NRC staff evaluated information contained in the licensee's application and data reported to the NRC by the licensee for the last five years of operation to determine the projected radiological impact of the facility on the environment during the period of the renewed license at the increased power level. The NRC staff found that releases of radioactive material and personnel exposures were all well within applicable regulatory limits. Based on this evaluation, the NRC staff concluded that continued operation of the reactor and the increase in the licensed maximum steady-state power level should not have a significant environmental impact.

I. Radiological Impact

Environmental Effects of Reactor Operations

Gaseous radioactive effluents are discharged by the facility exhaust system via a stack adjacent to the reactor building, at a volumetric flow rate of approximately 3.5 cubic meters per second (7,500 cubic feet per second). The only significant nuclide found in the gaseous effluent stream is Argon-41. The licensee performs continuous measurements of Argon-41 at the point of release. Argon-41 releases reported in the licensee's annual reports average approximately 1445 Curies (Ci) for a typical year. According to the licensee's annual reports, these releases resulted in an annual average effluent concentration of 0.386E–8 microCuries per milliliter (mCi/ml). The NRC staff performed check calculations of Argon-

41 releases and found the licensee's calculations to be reasonable. The calculated value is based on a dilution factor of 3,000 for gaseous effluents released from the facility exhaust stack. The licensee's application for license renewal contains a more realistic, and still conservative, dilution factor of 50,000. Based on this dilution factor, the annual average effluent concentration of Argon-41 would be 0.023E–8 ∓Ci/ml. This concentration is less than three percent of the air effluent concentration limit of 1E–8 ∓Ci/ml set by 10 CFR part 20, appendix B, Table 2. The potential annual radiation dose to a member of the general public resulting from this concentration is approximately 0.012 milliSieverts (mSv) (1.2 millirems (mrem)). As discussed later in this EA, the licensee's off-site dose measurements show a potential annual radiation dose from gaseous effluents of less than 0.01 mSv (1 mrem). These potential radiation doses demonstrate compliance with the dose limit of 1 mSv (100 mrem) set by 10 CFR 20.1301, and the air emissions dose constraint of 0.1 mSv (10 mrem) specified in 10 CFR 20.1101(d). The increase in maximum steady-state power level may increase the production of Argon-41 by 20 percent. Calculations by the licensee predict a maximum potential annual radiation dose to a member of the public of less than 0.02 mSv (2 mrem) given a 20 percent increase in Argon-41 production. The NRC staff performed check calculations of the maximum potential dose and found the licensee's calculations to be reasonable. The calculated potential dose is a small fraction of the regulatory limits discussed above. Because the licensee performs continuous monitoring of all airborne releases, the effluent concentrations at the increased power level will be measured to ensure that releases remain below the regulatory limits and as low as is reasonably achievable (ALARA).

Liquid wastes are generated at the MITR–II primarily as a result of sampling of the coolant, decontamination activities, and routine cleaning of the facility. Liquid wastes are stored in two above-ground tanks located in a dedicated structure equipped with leak detection and leak containment capabilities. The licensee disposes of liquid radioactive wastes primarily by discharge to the sanitary sewer. Liquid wastes may also be disposed of by use of ion exchangers, decay in storage, solidification, or transfer to an appropriate waste management facility. Discharge of liquid waste to the sanitary sewer requires the approval of the Reactor Radiation Protection Office (RRPO) to ensure that discharges meet the requirements of 10 CFR 2.2003. Prior to discharge, a waste sample is analyzed for gross alpha-beta, tritium, and isotopic content to ensure the concentrations of radionuclides in the liquid meet the limits in 10 CFR Part 20, Appendix B, Table 3 for releases to sewers. A sewer discharge pump is located within the restricted area for the discharge of liquid waste to the sewer system. The discharge path is from the liquid waste storage tanks into a filtration system, through a radiation monitor for continuous monitoring, and then to the sewer. Discharges reported in the licensee's annual reports indicate an annual average release of 0.08 milliCuries (mCi) of radionuclides other than tritium. Reported annual releases have not exceeded 0.21 mCi. This demonstrates compliance with the annual release limit of 1 Ci specified in 10 CFR 20.2003(a)(4) for radionuclides other than tritium. These radionuclides were discharged at an annual average concentration of 0.54E-8 ∓Ci/ml, with no monthly average concentration exceeding 9.3E-8 ∓Ci/ml. As mentioned above, the licensee performs appropriate sampling to ensure releases of liquid mixtures of radionuclides meet the release criteria in 10 CFR 20.2003. Tritium discharges reported in the licensee's annual reports indicate an annual average release of 240 milliCuries (mCi) at an average concentration of 1.91E-5 ∓Ci/ml. The maximum monthly concentration released during the past 5 years was 2.19E-4 ∓Ci/ml. These releases demonstrate compliance with the annual limit of 5 Ci specified in 10 CFR 20.2003(a)(4) and the monthly average concentration limit of 1.0E-2 ∓Ci/ml for disposal of tritium by releases to sewers specified in 10 CFR 20, Appendix B, Table 3. Due to the nature of the liquid waste sources, quantities of liquid wastes should not increase significantly as a result of the increase in maximum steady-state power level. Because the licensee samples all liquid wastes prior to discharge and continuously monitors the wastes during discharge, the licensee's liquid waste discharge program is adequate to ensure that all releases will remain within the applicable regulatory limits.

The licensee classifies solid low-level radioactive wastes generated at the MITR–II as either wet or dry waste. Wet waste includes filters and ion exchange resins. Dry waste includes ventilation filters and contaminated materials such as paper, cloth, metals, and other items used for routine facility operations. Solid waste may also include reactor components and experiment materials. Solid waste management is divided into four processes: Collection, pretreatment, solidification, and packing. According to the licensee, volume reduction methodologies are applied to all processes and solid wastes are stored onsite for decay. After solid waste is processed, it is sent to a designated waste facility in accordance with all applicable regulations. Solid radioactive releases reported in the licensee's annual reports for the last 5 years totaled 1127 mCi.

The reactor fuel and heavy-water are supplied by the Department of Energy (DOE). The DOE is responsible for disposing of the spent fuel and the heavy-water. To comply with the Nuclear Waste Policy Act of 1982, MIT has entered into a contract with DOE that provides that DOE retain title to the fuel utilized at the MITR–II and that DOE is obligated to take the fuel from the site for final disposition. The licensee prepares the spent fuel for shipment in accordance with the applicable regulations in 10 CFR parts 71 and 73, and U.S. Department of Transportation regulations. Heavy-water is likewise treated and stored in the facility until DOE transfers it to a DOE storage facility or to a processing facility.

Personnel exposures at the facility are well within the limits set by 10 CFR 20.1201, and ALARA. Doses to personnel are monitored under a program that meets the requirements of 10 CFR 20.1501. The RRPO records and tracks all personnel radiation exposures. Data reported in the licensee's annual reports indicates that most personnel receive an annual dose of less than 1 mSv (100 mrem), with many of the personnel doses being below the detectable level. Data reported in the licensee's annual reports indicates that the maximum personnel dose is typically less than 7.5 mSv (750 mrem) per year, and no personnel have received a dose greater than half the occupational limit of 50 mSv (5,000 mrem) specified in 10 CFR 20.1201. The licensee maintains air sampling, area radiation monitoring, and bioassay programs to further monitor potential radiation hazards and exposures to personnel. The licensee does not expect the increase in reactor power level to cause a proportional increase in personnel doses. However, even with a 20 percent increase, personnel doses will remain well below the regulatory limit and the licensee's radiation protection program should continue to keep personnel doses ALARA.

The licensee conducts an environmental monitoring program to record and track the potential radiological impact of MITR–II operation on the surrounding environment. The RRPO administers the program and maintains the appropriate records in accordance with 10 CFR 20.2103. The program includes monthly exposure measurements at locations on the restricted area boundary and control locations. The program also includes quarterly exposure measurements and continuous monitoring using Geiger-Mueller tube detectors at five locations approximately 0.40 kilometers (0.25 miles) from the site boundary. The measurements are representative of potential public radiation doses from the release of gaseous effluents from the facility. Over the past five years, the environmental monitoring program indicated that radiation exposures at the monitoring locations were less than 0.01 mSv (1 mrem) per year. Based on the NRC staff's review of the past five years of data, the NRC staff concludes that the potential radiological impact of operation of the MITR–II on the surrounding environment is a small fraction of the regulatory limits. Any changes in radiological impact due to the increase in reactor power are expected to be minimal, and the potential radiological impact will remain a small fraction of the regulatory limits.

Environmental Effects of Accidents

Accident scenarios are discussed in Chapter 13 of the MITR–II SAR. The maximum hypothetical accident is the release of the fission products contained in four fuel plates to the reactor coolant, the containment building, and ultimately the uncontrolled environment. The licensee conservatively calculated doses to facility personnel and the maximum potential dose to a member of the public. NRC staff performed independent calculations to verify that the doses represent conservative estimates for the MHA. As discussed in the NRC staff's safety evaluation, the worst case fission product source term will not result in occupational doses or doses to members of the general public in excess of the limits specified by 10 CFR part 20.

II. Non-Radiological Impacts

The MITR–II core is cooled by a light water primary system consisting of the reactor tank, a heat removal system, and a coolant cleanup system. Cooling occurs by forced or natural convection, with the heated coolant rising out of the core and into the bulk tank water. The primary system transfers heat to the secondary system via heat exchangers. The secondary system also contains heat exchangers to remove heat from other reactor systems at the MITR–II. The secondary system coolant is continuously monitored for radioactivity using redundant radiation detectors, and the coolant is sampled for radioactivity daily during reactor operation.

Losses of secondary coolant due to evaporation and system discharge to the sewer (blowdown) are replaced using water from the local city water supply. According to the licensee, daily secondary coolant losses are approximately 7,000 gallons due to system blowdown and an average of 30,000 gallons due to evaporation during reactor operation. This is a small percentage of the approximate 2.7 million gallons used campus-wide by MIT per day. The increase in licensed power level may proportionally increase the facility water usage, but the total facility water usage will remain a small percentage of the campus-wide water usage. Given that the proposed action does not involve a significant increase in water usage, the NRC staff concludes that the proposed action will not have a significant impact on the local water supply.

Heat is transferred from the secondary system to the atmosphere via cooling towers rated at 10 MW(t) total heat dissipation capacity. During reactor operation at 6 MW(t), the heat dissipation would be comparable to that at local factories and other MIT laboratories. Neither extensive heat drift nor fog will occur at this heat dissipation rate. A small amount of heat may be discharged to the sewer during blowdown of the cooling towers. However, the small amount of heat dissipated in this manner is insufficient to raise average water temperatures in the surrounding environment. Based on the above considerations, the NRC staff concludes that the proposed action will not have a significant thermal impact on the surrounding environment.

National Environmental Policy Act (NEPA) Considerations

NRC has responsibilities that are derived from NEPA and from other environmental laws, which include the Endangered Species Act (ESA), Coastal Zone Management Act (CZMA), National Historic Preservation Act (NHPA), Fish and Wildlife Coordination Act (FWCA), and Executive Order 12898 Environmental Justice. The following presents a brief discussion of impacts associated with these laws and other requirements.

I. Endangered Species Act

Federally- or State-protected species have not been found in the vicinity of the MITR–II. Effluents and emissions from the MITR–II have not had an impact on critical habitat.

II. Coastal Zone Management Act

The MITR–II is not located within any managed coastal zones, nor would the MITR–II effluents and emissions impact any managed coastal zones.

III. National Historic Preservation Act

The NHPA requires Federal agencies to consider the effects of their undertakings on historic properties. The National Register of Historic Places (NRHP) lists two historical sites located near the MIT campus, the North Avenue Congregational Church and the New England Confectionery Company Factory. According to the NRHP, the locations of these sites are approximately 100 meters (300 feet) from the MITR–II. Given the distance to these sites and that the proposed action does not involve any demolition, rehabilitation, construction, changes in land use, or significant changes in effluents from the facility, continued operation of the MITR–II will not impact any historic sites. Based on this information, the NRC finds that the potential impacts of license renewal would have no adverse effect on historic properties. The NRC staff informed the State Historic Preservation Officer (SHPO) of this finding, and the SHPO concurred with the NRC finding.

IV. Fish and Wildlife Coordination Act

The licensee is not planning any water resource development projects, including any of the modifications relating to impounding a body of water, damming, diverting a stream or river, deepening a channel, irrigation, or altering a body of water for navigation or drainage.

V. Executive Order 12898—Environmental Justice

The environmental justice impact analysis evaluates the potential for disproportionately high and adverse human health and environmental effects on minority and low-income populations that could result from the relicensing and the continued operation of the MITR–II. Such effects may include human health, biological, cultural, economic, or social impacts. Minority and low-income populations are subsets of the general public residing in the vicinity of the research reactor, and all are exposed to the same health and environmental effects

generated from activities at the MITR–II.

Minority Populations in the Vicinity of the MITR–II—According to 2000 census data, 18.1 percent of the population (approximately 6,472,000 individuals) residing within a 50-mile radius of the MITR–II identified themselves as minority individuals. The largest minority group was Hispanic or Latino (approximately 438,000 persons or 6.8 percent), followed by Black or African American (approximately 397,000 persons or about 6.1 percent). According to the U.S. Census Bureau, about 16.4 percent of the Middlesex County population identified themselves as minorities, with persons of Asian origin comprising the largest minority group (6.9 percent). According to census data 3-year average estimates for 2006–2008, the minority population of Middlesex County, as a percent of total population, had increased to 20.1 percent.

Low-Income Populations in the Vicinity of the MITR–II—According to 2000 census data, approximately 106,300 families and 575,000 individuals (6.6 and 8.9 percent, respectively) residing within a 50-mile radius of the MITR–II were identified as living below the Federal poverty threshold in 1999. The 1999 Federal poverty threshold was $17,029 for a family of four.

According to Census data in the 2006–2008 American Community Survey 3-Year Estimates, the median household income for Massachusetts was $64,684, while 10.0 percent of the state population and 7.1 percent of families were determined to be living below the Federal poverty threshold. Middlesex County had a higher median household income average ($77,373) and lower percentages (7.4 percent) of individuals and families (4.9 percent) living below the poverty level, respectively.

Impact Analysis—Potential impacts to minority and low-income populations would mostly consist of radiological effects, however radiation doses from continued operations associated with the license renewal are expected to continue at near current levels, and would be well below regulatory limits.

Based on this information and the analysis of human health and environmental impacts presented in this EA, the proposed relicensing would not have disproportionately high and adverse human health and environmental effects on minority and low-income populations residing in the vicinity of the MITR–II.

Environmental Impacts of the Alternatives to the Proposed Action

As an alternative to license renewal, the NRC staff considered denial of the proposed action. If the Commission denied the application for license renewal, facility operations would end and decommissioning would be required. The NRC staff notes that, even with a renewed license, the MITR–II will eventually be decommissioning, at which time the environmental effects of decommissioning will occur. Decommissioning would be conducted in accordance with an NRC-approved decommissioning plan which would require a separate environmental review under 10 CFR 51.21. Cessation of reactor operations would reduce or eliminate radioactive effluents and emissions. However, as previously discussed in this environmental assessment, radioactive effluents and emissions from reactor operations constitute a small fraction of the applicable regulatory limits. Therefore, the environmental impacts of license renewal and the denial of the request for license renewal would be similar. In addition, denying the request for license renewal would eliminate the benefits of teaching, research, and services provided by the MITR–II. If the Commission denied the request for an increase in the licensed maximum steady-state power level, effluent releases and emissions would remain at the current levels. As discussed in this EA, the increase in power level should not result in a significant increase in effluent releases, and all releases will remain a small fraction of the applicable regulatory limits. Therefore, the environmental impacts of the increase in the licensed maximum steady-state power level and denial of the request are similar.

Alternative Use of Resources

The proposed action does not involve the use of any different resources or significant quantities of resources beyond those previously considered in the issuance of Amendment No. 10 to Facility Operating License No. R–37 for the MITR–II dated July 23, 1975, which approved operation of a modified reactor core at a maximum power level of 5 MW(t).

Agencies and Persons Consulted

In accordance with the agency's stated policy, on July 22, 2010, the NRC staff consulted with the State Liaison Officer regarding the environmental impact of the proposed action. The consultation involved a thorough explanation of the environmental review, the details of this environmental assessment, and the NRC staff's findings. The State official stated the he understood the NRC review and had no comments regarding the proposed action. The NRC staff also informed the SHPO of the potential impact of the proposed action on historic resources. As previously mentioned, the SHPO concurred with the NRC determination that license renewal and the increase in licensed power level would have no adverse effect on historic properties in the vicinity of the MITR–II.

Finding of No Significant Impact

On the basis of the environmental assessment, the NRC concludes that the proposed action will not have a significant effect on the quality of the human environment. Accordingly, the NRC has determined not to prepare an environmental impact statement for the proposed action.

For further details with respect to the proposed action, see the licensee's letter dated July 8, 1999 (ML080950435), as supplemented by letters dated February 10 (ML003683419, ML052900533, ML053190234, and ML053190384), and May 8, 2000 (ML081000625), January 29, 2004 (ML081000626), July 5 (ML061930319) and October 11, 2006 (ML063340716), January 26, 2007 (ML070320555), February 22 (ML081000627), May 29 (ML081560246), August 15 (ML082350069), August 21 (ML082401050), August 26 (ML082470562), October 6 (ML082900488), October 7 (ML082910241), and December 1, 2008 (ML083430006), May 26 (ML091540202), August 27 (ML092450427), October 5 (ML092930273), October 9 (ML092930278), and November 19, 2009 (ML093290155), and March 30 (ML100970368), August 6 (ML102310032), and August 26, 2010 (ML102440122). Documents may be examined, and/or copied for a fee, at the NRC's Public Document Room (PDR), located at One White Flint North, 11555 Rockville Pike (first floor), Rockville, Maryland. Publicly available records will be accessible electronically from the Agencywide Documents Access and Management System (ADAMS) Public Electronic Reading Room on the NRC Web site *http://www.nrc.gov/reading-rm/adams.html*. Persons who do not have access to ADAMS or who encounter problems in accessing the documents located in ADAMS should contact the NRC PDR Reference staff at 1–800–397–4209, or 301–415–4737, or send an e-mail to *pdr@nrc.gov.*

Dated at Rockville, Maryland, this 27th day of September 2010.

For the Nuclear Regulatory Commission.

Jessie Quichocho,

Chief, Research and Test Reactors Licensing Branch, Division of Policy and Rulemaking, Office of Nuclear Reactor Regulation.

[FR Doc. 2010–24809 Filed 10–1–10; 8:45 am]

BILLING CODE 7590–01–P

NUCLEAR REGULATORY COMMISSION

[Docket No. 50–397; NRC–2010–0029]

Energy Northwest; Columbia Generating Station Environmental Assessment and Finding of No Significant Impact

The U.S. Nuclear Regulatory Commission (NRC) is considering changes to the Emergency Plan, pursuant to 10 CFR 50.54, "Conditions of licenses," paragraph (q), for Facility Operating License No. NPF–21, issued to Energy Northwest (EN, the licensee) for operation of the Columbia Generating Station (CGS), located in Benton County, Washington. Therefore, as required by 10 CFR 51.21, the NRC performed an environmental assessment. Based on the results of the environmental assessment, the NRC is issuing a finding of no significant impact.

Environmental Assessment

Identification of the Proposed Action

The proposed action would revise the Emergency Plan to support U.S. Department of Energy (DOE) non-intrusive surveillance and characterization activities within the 618–11 High-Level Waste Burial Ground (618–11). The 618–11 site is an 8-acre parcel located on DOE property that is directly adjacent to land leased by EN from the DOE, and is located wholly within CGS's Exclusion Area Boundary. The site was used from 1962 through 1967 and contains low- to high-activity waste, fission products, some plutonium-contaminated waste, and toxicological waste. The DOE intends to remediate 618–11 and other waste burial ground locations on the Hanford Site. The licensee proposes to modify the Emergency Plan to address inter-agency coordination, cooperation, and responsibilities for potential 618–11 site events and to add specific emergency action level criteria and actions associated with any potential toxic, flammable, or radioactive material release from an abnormal event at the 618–11 site that could pose a threat to the health and safety of licensee staff or visitors within the CGS exclusion area.

The proposed action is in accordance with the licensee's application dated April 28, 2010 (Agencywide Documents Access and Management System (ADAMS) Accession No. ML101250340), as supplemented by letter dated August 9, 2010 (ADAMS Accession No. ML102300537).

The Need for the Proposed Action

The 618–11 site is an 8-acre parcel located on DOE property that is directly adjacent to land leased by EN from the DOE, and is located wholly within CGS's Exclusion Area Boundary. The site was used from 1962 through 1967 and contains low- to high-activity waste, fission products, some plutonium-contaminated waste, and toxicological waste. The Hanford Federal Facility Agreement and Consent Order between the DOE, the U.S. Environmental Protection Agency, and the State of Washington, is the legal document that binds DOE to milestones to remediate the 618–11 site, among other waste burial ground locations, on the Hanford Site. The non-intrusive surveillance and characterization activities will obtain data and information necessary for planning future intrusive activities and remediation strategies. The licensee proposes to modify the Emergency Plan to address inter-agency coordination, cooperation, and responsibilities for potential 618–11 site events during the DOE's non-intrusive surveillance and characterization activities and to add specific emergency action level criteria and actions associated with any potential toxic, flammable, or radioactive material release from an abnormal event at the 618–11 site that could pose a threat to the health and safety of licensee staff or visitors within the CGS exclusion area.

The NRC has completed its evaluation of the proposed action and concludes that the proposed changes to the CGS Emergency Plan meet the standards of 10 CFR 50.47(b) and the requirements of Appendix E to 10 CFR part 50 and provide reasonable assurance that the licensee will take adequate protective measures in a radiological emergency. The NRC staff's safety evaluation will be provided with the license amendment that will be issued to the licensee approving the changes to the Emergency Plan.

In its application, the licensee also requested changes to the CGS Final Safety Analysis Report (FSAR). The NRC staff's determination regarding the proposed changes to the FSAR will be provided by separate correspondence.

Environmental Impacts of the Proposed Action

The NRC has completed its environmental assessment of the proposed Emergency Plan changes to CGS. The staff has concluded that the changes would not significantly affect plant safety and would not have a significant adverse effect on the probability of an accident occurring. The proposed action would not result in an increased radiological hazard beyond those previously analyzed in the Final Safety Analysis Report. There will be no change to radioactive effluents that affect radiation exposures to plant workers and members of the public. No changes will be made to plant buildings or the site property. Therefore, no changes or different types of radiological impacts are expected as a result of the proposed changes.

The proposed action does not result in changes to land use or water use, or result in changes to the quality or quantity of non-radiological effluents. No changes to the National Pollution Discharge Elimination System permit are needed. No effects on the aquatic or terrestrial habitat in the vicinity or the plant, or to threatened, endangered, or protected species under the Endangered Species Act, or impacts to essential fish habitat covered by the Magnuson-Stevens Act are expected. There are no impacts to the air or ambient air quality. There are no impacts to historical and cultural resources. There would be no noticeable effect on socioeconomic conditions in the region. Therefore, no changes or different types of non-radiological environmental impacts are expected as a result of the proposed action. Accordingly, the NRC concludes that there are no significant environmental impacts associated with the proposed action.

Environmental Impacts of the Alternatives to the Proposed Action

As an alternative to the proposed action, the staff considered denial of the proposed action (i.e., the "no-action" alternative). Denial of the application would result in no change in current environmental impacts. The environmental impacts of the proposed action and the alternative action are similar.

Alternative Use of Resources

The action does not involve the use of any different resources than those previously considered in the Final Environmental Statement for CGS dated December 1981.

Agencies and Persons Consulted

In accordance with its stated policy, on September 21, 2010, the NRC staff consulted with the Washington State official, Mr. R. Cowley of the Office of Radiation Protection, regarding the environmental impact of the proposed action. The State official had no comments.

Finding of No Significant Impact

On the basis of the environmental assessment, the NRC concludes that the proposed action will not have a significant effect on the quality of the human environment. Accordingly, the NRC has determined not to prepare an environmental impact statement for the proposed action.

For further details with respect to the proposed action, see the licensee's letter dated April 28, 2010, as supplemented by letter dated August 9, 2010. Documents may be examined, and/or copied for a fee, at the NRC's Public Document Room (PDR), located at One White Flint North, Public File Area O1 F21, 11555 Rockville Pike (first floor), Rockville, Maryland. Publicly available records will be accessible electronically from the ADAMS Public Electronic Reading Room on the Internet at the NRC Web site, *http://www.nrc.gov/reading-rm/adams.html.* Persons who do not have access to ADAMS or who encounter problems in accessing the documents located in ADAMS should contact the NRC PDR Reference staff by telephone at 1–800–397–4209 or 301–415–4737, or send an e-mail to *pdr.resource@nrc.gov.*

Dated at Rockville, Maryland, this 28th day of September 2010.

For The Nuclear Regulatory Commission.

Carl F. Lyon,

Project Manager, Plant Licensing Branch IV, Division of Operating Reactor Licensing, Office of Nuclear Reactor Regulation.

[FR Doc. 2010–24811 Filed 10–1–10; 8:45 am]

BILLING CODE 7590–01–P

NUCLEAR REGULATORY COMMISSION

[NRC–2010–0314; Docket Nos. 50–313 and 50–368]

Exemption; Entergy Operations, Inc.; Arkansas Nuclear One, Units 1 and 2

1.0 Background

Entergy Operations, Inc. (Entergy, the licensee) is the holder of Facility Operating License Nos. DPR–51 and NPF–6, which authorize operation of the Arkansas Nuclear One, Units 1 and 2 (ANO–1 and ANO–2), respectively. The licenses provide, among other things, that the facility is subject to all rules, regulations, and orders of the U.S. Nuclear Regulatory Commission (NRC, the Commission) now or hereafter in effect.

The facility consists of two pressurized-water reactors located in Pope County, Arkansas.

2.0 Request/Action

Title 10 of the Code of Federal Regulations, Part 50, Section 50.36a, paragraph (a)(2) (10 CFR 50.36a(a)(2)) requires each licensee to "submit a report to the Commission annually that specifies the quantity of each of the principal radionuclides released to unrestricted areas in liquid and in gaseous effluents during the previous 12 months, including any other information as may be required by the Commission to estimate maximum potential annual radiation doses to the public resulting from effluent releases. The report must be submitted as specified in § 50.4, and the time between submission of the reports must be no longer than 12 months. If quantities of radioactive materials released during the reporting period are significantly above design objectives, the report must cover this specifically." The licensee submitted its Radioactive Effluent Release Report for the Calendar Year 2009 on February 25, 2010.

The ANO–1 Technical Specification (TS) 5.5.1 and ANO–2 TS 6.5.1 require the Radioactive Effluent Release Report, covering the operation of each unit in the previous year, to be submitted prior to May 1 of each year in accordance with 10 CFR 50.36a. Originally, both ANO–1 and ANO–2 TSs required this report be submitted either prior to March 1 or within 60 days of January 1 of each year. Later, during the ANO–1 TS conversion, the submittal date for ANO–1 became May 1. The licensee continued to send one submittal for the site as allowed by the TSs. The licensee also continued to submit the report in accordance with the March 1 deadline. Entergy proposed to reorganize Section 6 of the ANO–2 TS in 2003. The proposed changes were to make the ANO–2 requirements consistent with the ANO–1 TS requirements. These changes were subsequently approved by the NRC and the submittal date became "prior to May 1" of each year for both units. However, while the submittal dates were consistent again between the ANO–1 and ANO–2 TSs, the 12-month interval between submittals was not addressed. The actual submittal date remained at the end of February of each year because, the TS changes notwithstanding, the time between report submittals cannot be more than 12 months. As a result, a period of only 2 months is available to prepare and submit the report. With ANO continuing to send one submittal for the site, this presents an undue administrative burden on ANO personnel due to the compressed schedule for data collection, report preparation, and internal review following the closure of the reporting period.

Therefore, the licensee has requested a one-time exemption from the 12-month reporting criteria specified in 10 CFR 50.36a(a)(2) for its submittal of the calendar year 2010 Radioactive Effluent Release Report. The proposed exemption allows an additional 2 months for these activities to match the current submittal date stated in the TSs. In summary, the exemption does not affect the information required to be submitted or the time period the report covers, only the date the report is submitted. Subsequent submittals, pursuant to 10 CFR 50.36a(a)(2), will follow the 12-month reporting criteria.

The application for exemption, dated March 18, 2010, is publicly available in the Agencywide Documents Access and Management System (ADAMS) under ADAMS Accession No. ML100780094).

3.0 Discussion

Pursuant to 10 CFR 50.12, the Commission may, upon application by any interested person or upon its own initiative, grant exemptions from the requirements of 10 CFR Part 50, when (1) the exemptions are authorized by law, will not present an undue risk to public health or safety, and are consistent with the common defense and security; and (2) when special circumstances are present. These circumstances include the special circumstances that would provide only temporary relief from the applicable regulation and the licensee or applicant has made good faith efforts to comply with the regulation.

Authorized by Law

This exemption would allow the licensee to submit the 2010 Radioactive Effluent Release Report prior to May 1, 2011, which would exceed the report submittal requirement of no longer than 12 months specified in 10 CFR 50.36a(a)(2). As stated above, 10 CFR 50.12 allows the NRC to grant exemptions from the requirements of 10 CFR Part 50. The NRC staff has determined that granting of the licensee's proposed exemption will not result in a violation of the Atomic Energy Act of 1954, as amended, or the Commission's regulations. Therefore, the exemption is authorized by law.

No Undue Risk to Public Health and Safety

The underlying purpose of the reporting requirements specified in 10 CFR 50.36a(a)(2) is to report to the Commission annually the quantity of each of the principal radionuclides released to unrestricted areas in liquid and in gaseous effluents during the previous 12 months, including any other information as may be required by the Commission to estimate maximum potential annual radiation doses to the public resulting from effluent releases. This exemption does not affect the information required to be submitted or the time period the report covers, only the date the report is submitted. Based on the above, no new accident precursors are created by extending the submittal date for the 2010 Radioactive Effluent Release Report from prior to March 1 to prior to May 1, 2011. Thus, the probability of postulated accidents is not increased. Also, based on the above, the consequences of postulated accidents are not increased. Therefore, there is no undue risk to public health and safety.

Consistent With Common Defense and Security

The proposed exemption would allow the licensee to submit the 2010 Radioactive Effluent Release Report prior to May 1, 2011, which would exceed the report submittal requirement of no longer than 12 months specified in 10 CFR 50.36a(a)(2) by 2 months. This change has no relation to security issues. Therefore, the common defense and security is not impacted by this exemption.

Special Circumstances

Special circumstances, in accordance with 10 CFR 50.12(a)(2)(v), are present whenever application of the regulation would provide only temporary relief from the applicable regulation and the licensee or applicant has made good faith efforts to comply with the regulation. The underlying purpose of the reporting requirement specified in 10 CFR 50.36a(a)(2) is to require each licensee to submit a report to the Commission annually that specifies the quantity of each of the principal radionuclides released to unrestricted areas in liquid and in gaseous effluents, including any other information as may be required by the Commission to estimate maximum potential annual radiation doses to the public resulting from effluent releases. The proposed exemption does not affect the information required to be submitted or the time period the report covers, only the date the report is to be submitted. The requested exemption provides temporary relief from the regulation in that it affords a one-time extension for submitting the annual report. The proposed exemption is an appropriate means to ensure that future reports are submitted on an annual basis as required by 10 CFR 50.36a(a)(2). Therefore, since the underlying purpose of 10 CFR 50.36a(a)(2) is achieved, the special circumstances of 10 CFR 50.12(a)(2)(v) for the granting of an exemption from 10 CFR 50.36a(a)(2) exists.

4.0 Conclusion

Accordingly, the Commission has determined that, pursuant to 10 CFR 50.12(a), the exemption is authorized by law, will not present an undue risk to the public health and safety, and is consistent with the common defense and security. Also, special circumstances are present. Therefore, the Commission hereby grants Entergy Operations, Inc., a one-time exemption from the requirements of 10 CFR 50.36a(a)(2), for ANO–1 and ANO–2.

The Commission has determined that granting this one-time exemption from the requirements of a regulation of 10 CFR 50.36(a)(2) involves (i) no significant hazards consideration, (ii) no significant change in the types or significant increase in the amounts of any effluents that may be released offsite, (iii) no significant increase in individual or cumulative public or occupational radiation exposure, (iv) no significant construction impact, and (v) no significant increase in the potential for or consequences from radiological accidents. In addition, the requirements from which this exemption is sought involve reporting requirements in 10 CFR 50.36a(a)(2). Accordingly, the exemption meets the eligibility criteria for categorical exclusion set forth in 10 CFR 51.22(c)(25)(i)–(vi). Therefore, in accordance with 10 CFR 51.22(b), no environmental impact statement or environmental assessment need be prepared in connection with the NRC's consideration of this exemption.

This exemption is effective upon issuance.

Dated at Rockville, Maryland this 28th day of September 2010.

For the Nuclear Regulatory Commission.

Robert A. Nelson,

Acting Director, Division of Operating Reactor Licensing, Office of Nuclear Reactor Regulation.

[FR Doc. 2010–24806 Filed 10–1–10; 8:45 am]

BILLING CODE 7590–01–P

NUCLEAR REGULATORY COMMISSION

Advisory Committee on Reactor Safeguards Meeting of the ACRS Subcommittee on Future Plant Designs; Revision to the September 24, 2010, ACRS Meeting Federal Register Notice

The **Federal Register** Notice for the ACRS Subcommittee Meeting on Future Plant Designs scheduled to be held on October 21, 2010, is being revised to notify the following:

The meeting will be open to public attendance with exception of portions that may be closed to protect information that is proprietary to Westinghouse Electric Company, General Electric—Hitachi Nuclear Energy (GEH), and their contractors, pursuant to 5 U.S.C. 552b(c)(4).

The notice of this meeting was previously published in the **Federal Register** on Friday, September 24, 2010, [75 FR 58448]. All other items remain the same as previously published.

Further information regarding this meeting can be obtained by contacting Christina Antonescu, Designated Federal Official (*Telephone:* 301–415–6792, *E-mail: Christina.Antonescu@nrc.gov*) between 7:30 a.m. and 5:15 p.m. (ET).

Dated: September 28, 2010.

Antonio F. Dias,

Chief, Reactor Safety Branch B, Advisory Committee on Reactor Safeguards.

[FR Doc. 2010–24791 Filed 10–1–10; 8:45 am]

BILLING CODE 7590–01–P

NUCLEAR REGULATORY COMMISSION

[NRC–2010–0002]

Sunshine Act: Notice of Meeting

AGENCY HOLDING THE MEETINGS: Nuclear Regulatory Commission.

DATE: Weeks of October 4, 11, 18, 25, November 1, 8, 2010.

PLACE: Commissioners' Conference Room, 11555 Rockville Pike, Rockville, Maryland.

STATUS: Public and Closed.

Week of October 4, 2010

There are no meetings scheduled for the week of October 4, 2010.

Week of October 11, 2010—Tentative

Thursday, October 14, 2010

9:30 a.m.—Briefing on Alternative Risk Metrics for New Light Water Reactors, (Public Meeting) (Contact: CJ Fong, 301 415–6249).

This meeting will be webcast live at the Web address—*http://www.nrc.gov*.

Week of October 18, 2010—Tentative

Monday, October 18, 2010

1:30 p.m.—NRC All Employees Meeting (Public Meeting), Marriott Bethesda North Hotel, 5701 Marinelli Road, Rockville, MD 20852.

Wednesday, October 20, 2010

9 a.m.—Briefing on Medical Issues (Public Meeting), (Contact: Michael Fuller, 301–415–0520).

This meeting will be webcast live at the Web address—*http://www.nrc.gov*.

Week of October 25, 2010—Tentative

Tuesday, October 26, 2010

9:30 a.m.—Briefing on Security Issues (Closed—Ex. 1).

Week of November 1, 2010—Tentative

Tuesday, November 2, 2010

9:30 a.m.—Briefing on Equal Employment Opportunity (EEO) and Small Business Programs (Public Meeting), (Contact: Barbara Williams, 301–415–7388).

This meeting will be webcast live at the Web address—*http://www.nrc.gov*.

Week of November 8, 2010—Tentative

There are no meetings scheduled for the week of November 8, 2010.

* * * * *

* The schedule for Commission meetings is subject to change on short notice. To verify the status of meetings, call (recording)—(301) 415–1292. Contact person for more information: Rochelle Bavol, (301) 415–1651.

* * * * *

The NRC Commission Meeting Schedule can be found on the Internet at: *http://www.nrc.gov/about-nrc/policy-making/schedule.html*.

* * * * *

The NRC provides reasonable accommodation to individuals with disabilities where appropriate. If you need a reasonable accommodation to participate in these public meetings, or need this meeting notice or the transcript or other information from the public meetings in another format (*e.g.* braille, large print), please notify Angela Bolduc, Chief, Employee/Labor Relations and Work Life Branch, at 301–492–2230, TDD: 301–415–2100, or by e-mail at *angela.bolduc@nrc.gov*. *mailto:dlc@nrc.gov.mailto:aks@nrc.gov* Determinations on requests for reasonable accommodation will be made on a case-by-case basis.

* * * * *

This notice is distributed electronically to subscribers. If you no longer wish to receive it, or would like to be added to the distribution, please contact the Office of the Secretary, Washington, DC 20555 (301–415–1969), or send an e-mail to *darlene.wright@nrc.gov*.

Dated: September 29, 2010.

Rochelle C. Bavol,

Policy Coordinator, Office of the Secretary.

[FR Doc. 2010–24912 Filed 9–30–10; 4:15 pm]

BILLING CODE 7590–01–P

NUCLEAR WASTE TECHNICAL REVIEW BOARD

Board Meeting: Technical Lessons Gained From High-Level Nuclear Waste Disposal Efforts

Pursuant to its authority under section 5051 of Public Law 100–203, Nuclear Waste Policy Amendments Act of 1987, the U.S. Nuclear Waste Technical Review Board will meet in Dulles, Virginia, on October 26, 2010, to discuss technical aspects of the U.S. Department of Energy's (DOE) activities over the last 20 years related to managing and disposing of spent nuclear fuel and high-level radioactive waste. The Board will consider technical lessons that can be gained from those experiences that may be useful in informing future waste management and disposal efforts.

Former managers, contractors, and scientists associated with the Yucca Mountain program have been invited to discuss their experiences at the meeting. The Board also has invited representatives from affected units of governments in Nevada to provide their perspectives on technical oversight, and representatives from several countries with nuclear waste programs have been invited to discuss their own programs and their views of the U.S. experience to date.

The Board meeting will be held at the Marriott Washington Dulles Airport, 45020 Aviation Drive, Dulles, VA 20166; (tel.) 703–471–9500, (fax) 703–661–8714. A block of rooms has been reserved at the hotel for meeting attendees. To ensure receiving the meeting rate, reservations must be made by October 6, 2010. For directions to the hotel or to make reservations, go to *http://www.marriott.com/hotels/travel/iadap?groupCode=nucnuca&app=resvi* or call 800–228–9290.

A detailed meeting agenda will be available on the Board's Web site at *http://www.nwtrb.gov* approximately one week before the meeting. The agenda also may be obtained by telephone request at that time. The meeting will be open to the public, and opportunities for public comment will be provided.

The meeting will begin at 8:30 a.m. on Tuesday morning. Time has been set aside at the end of the day for public comments. Those wanting to speak are encouraged to sign the "Public Comment Register" at the check-in table. A time limit may have to be set on individual remarks, but written comments of any length may be submitted for the record.

Transcripts of the meeting will be available on the Board's Web site, by e-mail, on computer disk, and on library-loan in paper format from Davonya Barnes of the Board's staff no later than November 22, 2010.

The Board was established as an independent Federal agency to provide objective expert advice to Congress and the Secretary of Energy on technical issues and to review the technical validity of DOE activities related to implementing the Nuclear Waste Policy Act. Board members are experts in their fields and are appointed to the Board by the President from a list of candidates submitted by the National Academy of Sciences. The Board is required to report to Congress and the Secretary no fewer than two times each year. Board reports, correspondence, congressional testimony, and meeting transcripts and materials are posted on the Board's Web site: *http://www.nwtrb.gov.*

For information on the meeting agenda, contact Karyn Severson. For information on lodging or logistics, contact Linda Coultry; 2300 Clarendon Boulevard, Suite 1300; Arlington, VA 22201–3367; (tel) 703–235–4473; (fax) 703–235–4495.

Dated: September 28, 2010.

Nigel Mote,

Executive Director, U.S. Nuclear Waste Technical Review Board.

[FR Doc. 2010–24771 Filed 10–1–10; 8:45 am]

BILLING CODE 6820–AM–M

SMALL BUSINESS ADMINISTRATION

Data Collection Available for Public Comments and Recommendations

ACTION: Notice and request for comments.

SUMMARY: In accordance with the Paperwork Reduction Act of 1995, this notice announces the Small Business Administration's intentions to request approval on a new and/or currently approved information collection.

DATES: Submit comments on or before December 3, 2010.

ADDRESSES: Send all comments regarding whether these information collections are necessary for the proper performance of the function of the agency, whether the burden estimates are accurate, and if there are ways to minimize the estimated burden and enhance the quality of the collections, to Gail Hepler, Chief 7(a) Program Branch, Office of Financial Assistance, Small Business Administration, 409 3rd Street, 8th Floor, Washington, DC 20416.

FOR FURTHER INFORMATION CONTACT: Gail Hepler, Office of Financial Assistance, 202–205–7530 *gail.hepler@sba.gov;* Curtis B. Rich, Management Analyst, 202–205–7030 *curtis.rich@sba.gov*.

SUPPLEMENTARY INFORMATION:

The purpose of this data collection is to monitor loan payment information on SBA loan portfolios arising from the Immediate Disaster Assistance Program. This exercise will involve monthly updates on the payments received by lenders from small businesses that have received funding through this guaranty program. The Agency looks to better manage the program's effectiveness by having lenders provide this form of periodic reporting to SBA.

Title: "Guaranteed Disaster Assistance Program—Payment Reporting."

Description of Respondents: Small Businesses that have experienced a physical or economic disaster in a federally declared disaster.

Form Number: N/A.

Annual Responses: 5,580.

Annual Burden: 467.

Small Business Administration (SBA) has established a loan program, the immediate Disaster Assistance Program, (IDAP) to assist small businesses affected by a federally declared disaster or economic disaster. The program will provide guaranteed loan through 7(a) lenders participating in IDAP to cover the short time frame between the data of the disaster damage and a small business. This requested information, which will be provided by the affected small businesses and IDAP participating lenders, will be used to determine eligibility for an IDAP loan and participation in the program.

Title: "Immediate Disaster Assistance Loan Program Application and Eligibility Data."

Description of Respondents: Small Businesses that have experienced a physical or economic disaster in a federally declared disaster.

Form Numbers: 2410, 2411, 2412.

Annual Responses: 984.

Annual Burden: 543.

Jacqueline White,

Chief, Administrative Information Branch.

[FR Doc. 2010–24764 Filed 10–1–10; 8:45 am]

BILLING CODE 8025–01–P

SMALL BUSINESS ADMINISTRATION

[Disaster Declaration #12335 and #12336]

Ohio Disaster #OH–00023

AGENCY: U.S. Small Business Administration.

ACTION: Notice.

SUMMARY: This is a notice of an Administrative declaration of a disaster for the State of OHIO dated 09/27/2010.

Incident: Severe Storms and Tornadoes.

Incident Period: 09/16/2010.

Effective Date: 09/27/2010.

Physical Loan Application Deadline Date: 11/26/2010.

Economic Injury (EIDL) Loan Application Deadline Date: 06/27/2011.

ADDRESSES: Submit completed loan applications to: U.S. Small Business Administration, Processing and Disbursement Center, 14925 Kingsport Road, Fort Worth, TX 76155.

FOR FURTHER INFORMATION CONTACT: A. Escobar, Office of Disaster Assistance, U.S. Small Business Administration, 409 3rd Street, SW., Suite 6050, Washington, DC 20416.

SUPPLEMENTARY INFORMATION: Notice is hereby given that as a result of the Administrator's disaster declaration, applications for disaster loans may be filed at the address listed above or other locally announced locations.

The following areas have been determined to be adversely affected by the disaster:

Primary Counties: Athens.

Contiguous Counties:

Ohio: Hocking, Meigs, Morgan, Perry, Vinton, Washington.

West Virginia: Wood.

The Interest Rates are:

	Percent
For Physical Damage:	
Homeowners With Credit Available Elsewhere	5.000
Homeowners Without Credit Available Elsewhere	2.500
Businesses With Credit Available Elsewhere	6.000
Businesses Without Credit Available Elsewhere	4.000
Non-Profit Organizations With Credit Available Elsewhere	3.625
Non-Profit Organizations Without Credit Available Elsewhere	3.000
For Economic Injury:	
Businesses & Small Agricultural Cooperatives Without Credit Available Elsewhere	4.000
Non-Profit Organizations Without Credit Available Elsewhere	3.000

The number assigned to this disaster for physical damage is 12335 C and for economic injury is 12336 0.

The States which received an EIDL Declaration # are Ohio and West Virginia.

(Catalog of Federal Domestic Assistance Numbers 59002 and 59008)

Dated: September 27, 2010.

Karen G. Mills,

Administrator.

[FR Doc. 2010–24765 Filed 10–1–10; 8:45 am]

BILLING CODE 8025–01–P

SMALL BUSINESS ADMINISTRATION

[Disaster Declaration #12333 and #12334]

South Dakota Disaster #SD–00034

AGENCY: U.S. Small Business Administration.

ACTION: Notice.

SUMMARY: This is a Notice of the Presidential declaration of a major disaster for Public Assistance Only for the State of South Dakota (FEMA–1938–DR), dated 09/23/2010.

Incident: Severe Storms and Flooding.

Incident Period: 07/21/2010 through 07/30/2010.

Effective Date: 09/23/2010.

Physical Loan Application Deadline Date: 11/22/2010.

Economic Injury (EIDL) Loan Application Deadline Date: 06/23/2011.

ADDRESSES: Submit completed loan applications to: U.S. Small Business Administration, Processing and Disbursement Center, 14925 Kingsport Road, Fort Worth, TX 76155.

FOR FURTHER INFORMATION CONTACT: A. Escobar, Office of Disaster Assistance, U.S. Small Business Administration, 409 3rd Street, SW., Suite 6050, Washington, DC 20416.

SUPPLEMENTARY INFORMATION: Notice is hereby given that as a result of the President's major disaster declaration on 09/23/2010, Private Non-Profit organizations that provide essential services of governmental nature may file disaster loan applications at the address listed above or other locally announced locations.

The following areas have been determined to be adversely affected by the disaster:

Primary Counties: Beadle, Brule, Clay, Fall River, Hand, Jerauld, Lincoln,

Miner, Minnehaha, Sanborn, Turner, Union.

The Interest Rates are:

	Percent
For Physical Damage:	
Non-Profit Organizations With Credit Available Elsewhere	3.625
Non-Profit Organizations Without Credit Available Elsewhere	3.000
For Economic Injury:	
Non-Profit Organizations Without Credit Available Elsewhere	3.000

The number assigned to this disaster for physical damage is 12333B and for economic injury is 12334B.

(Catalog of Federal Domestic Assistance Numbers 59002 and 59008)

James E. Rivera,

Associate Administrator for Disaster Assistance.

[FR Doc. 2010–24766 Filed 10–1–10; 8:45 am]

BILLING CODE 8025–01–P

SECURITIES AND EXCHANGE COMMISSION

[Investment Company Act Release No. 29441; 813–00373]

Elfun Trusts, et al.; Notice of Application

September 27, 2010.

AGENCY: Securities and Exchange Commission ("Commission").

ACTION: Notice of an application under section 6(b) of the Investment Company Act of 1940 ("Act") for an exemption from sections 15(a) and 15(c) of the Act, as well as from certain disclosure requirements.

SUMMARY OF APPLICATION: Applicants request an order that would permit certain employees' securities companies to enter into and materially amend investment subadvisory agreements ("Subadvisory Agreements") with investment subadvisers ("Subadvisers") without shareholder approval, and subject to the approval of a board of trustees ("Board") all the members of which are "interested persons" within the meaning of section 2(a)(19) of the Act ("Interested Board Members"), and would grant relief from certain disclosure requirements.

APPLICANTS: Elfun Trusts, Elfun International Equity Fund, Elfun Diversified Fund, Elfun Tax-Exempt Income Fund, Elfun Income Fund, Elfun Money Market Fund, General Electric S&S Program Mutual Fund, and General Electric S&S Income Fund (each, a "Fund" and, collectively, the "Funds"), and GE Asset Management Incorporated (the "Adviser").

DATES:

FILING DATES: The application was filed on July 9, 2008, and amended on January 20, 2009, January 28, 2009, and August 20, 2010. Applicants have agreed to file an amendment during the notice period, the substance of which is reflected in this notice.

HEARING OR NOTIFICATION OF HEARING: An order granting the application will be issued unless the Commission orders a hearing. Interested persons may request a hearing by writing to the Commission's Secretary and serving applicants with a copy of the request, personally or by mail. Hearing requests should be received by the Commission by 5:30 p.m. on October 22, 2010, and should be accompanied by proof of service on applicants, in the form of an affidavit or, for lawyers, a certificate of service. Hearing requests should state the nature of the writer's interest, the reason for the request, and the issues contested. Persons who wish to be notified of a hearing may request notification by writing to the Commission's Secretary.

ADDRESSES: Secretary, U.S. Securities and Exchange Commission, 100 F Street, NE., Washington, DC 20549–1090; Applicants: c/o GE Asset Management Incorporated, 3001 Summer Street, Stamford, CT 06905.

FOR FURTHER INFORMATION CONTACT: Steven I. Amchan, Senior Counsel, at (202) 551–6826, or Jennifer L. Sawin, Branch Chief, at (202) 551–6821 (Division of Investment Management, Office of Investment Company Regulation).

SUPPLEMENTARY INFORMATION: The following is a summary of the application. The complete application may be obtained via the Commission's Web site by searching for the file number, or an applicant using the Company name box, at *http://www.sec.gov/search/search.htm* or by calling (202) 551–8090.

Applicants' Representations

1. Each Fund is organized as a trust under the laws of New York or under the laws of Connecticut, and is a single series open-end management investment company registered under the Act.[1] Each Fund is an "employees' securities company," as defined in section 2(a)(13) of the Act, that has previously received a Commission order under section 6(b) of the Act granting relief from: (i) Section 10(a) of the Act to permit the Fund to have a Board comprised only of Interested Board Members, (ii) section 15(a) of the Act to permit the Fund to enter into an advisory agreement with the Adviser (or predecessors of the Adviser) without obtaining the approval of shareholders, and (iii) section 15(c) of the Act to permit the Fund to enter into, renew, or perform an advisory agreement with the Adviser (or its predecessors) with the approval of its fully "interested" Board (collectively, the "Prior Orders").

2. The Adviser, a wholly-owned subsidiary of General Electric Company ("GE"), is registered as an investment adviser under the Investment Advisers Act of 1940, as amended ("Advisers Act"). The Adviser serves as investment adviser to each Fund pursuant to an investment advisory agreement with the Fund (each, an "Advisory Agreement"). In accordance with the Prior Orders, the Funds did not obtain shareholder approval to implement the Advisory Agreements, and the Advisory Agreements were approved by the Board comprised only of Interested Board Members.

3. Under the terms of the Advisory Agreements, the Adviser provides each Fund with investment management services and administrative services. For these services, the Adviser receives from each Fund the compensation specified in the related Advisory Agreement, which is limited to reimbursement of the Adviser's reasonable costs of providing investment management and administrative services to the Fund, without an element of profit to the Adviser or its employees. The Advisory Agreements permit the Adviser to delegate certain responsibilities to Subadvisers. The Adviser has not exercised this authority, but may do so if the Commission grants the requested order. Each Subadviser will be registered as an investment adviser under the Advisers Act. The Adviser will evaluate, allocate assets to, and oversee the Subadvisers, and make recommendations about their hiring, termination and replacement to the Board, at all times subject to the authority of the fully "interested" Board. For its services to a Fund, a Subadviser will receive a fee as described in the

[1] Applicants also request relief with respect to any future registered open-end company that may be organized as an "employees' securities company" as defined in section 2(a)(13) of the Act, similar to the Funds as described in the application, which: (a) Is advised by the Adviser; (b) uses the investment management structure described in the application; and (c) complies with the terms and conditions of the application. The only existing registered open-end companies of this type that currently intend to rely on the requested order are named as applicants. If the name of any Fund contains the name of a Subadviser, the name of the Adviser will precede the name of the Subadviser.

related Subadvisory Agreement, which will be paid directly by the Fund. Unlike the Adviser's compensation, which is limited to reimbursement of the Adviser's reasonable costs, the fee paid to a Subadviser (other than an Affiliated Subadviser, as defined below) will contain an element of profit. Compensation to a Subadviser that is an "affiliated person," as defined in section 2(a)(3) of the Act, of the Funds or the Adviser (other than by reason of serving as a Subadviser to one or more Funds) ("Affiliated Subadviser") would be limited to the Affiliated Subadviser's reasonable cost of providing subadvisory services to the particular Fund and would not contain any element of profit.

4. Applicants request an order to permit the Adviser, subject to the approval of the Board, all the members of which are Interested Board Members, to enter into and materially amend Subadvisory Agreements without obtaining shareholder approval. Applicants also request an exemption from the various disclosure provisions described below that may require the Funds to disclose fees paid by the Adviser to each Subadviser. An exemption is requested to permit a Fund to disclose (as both a dollar amount and as a percentage of the Fund's net assets): (a) The aggregate compensation paid to the Adviser and any Affiliated Subadvisers; and (b) the aggregate fees paid to Subadvisers other than Affiliated Subadvisers ("Aggregate Fee Disclosure").

Applicants' Legal Analysis

1. Section 15(a) of the Act provides, in relevant part, that it is unlawful for any person to act as an investment adviser to a registered investment company except pursuant to a written contract that has been approved by the vote of a majority of the company's outstanding voting securities. Section 15(c) of the Act makes it unlawful for any registered investment company having a board of directors to enter into, renew, or perform any contract with an investment adviser unless the terms of the contract and any renewal thereof have been approved at an in-person meeting by a majority of directors who are not parties to the contract or "interested persons" of any such party, as that term is defined in section 2(a)(19) of the Act.

2. Form N–1A is the registration statement used by open-end investment companies. Item 14(a)(3) of Form N–1A requires disclosure of the method and amount of the investment adviser's compensation.[2]

3. Item 22 of Schedule 14A under the Securities Exchange Act of 1934 ("1934 Act"), through the application of rule 20a–1 under the Act, sets forth the information that must be included in an investment company proxy statement. Items 22(c)(1)(ii), 22(c)(1)(iii), 22(c)(8) and 22(c)(9) of Schedule 14A, taken together, require a proxy statement for a shareholder meeting at which the advisory contract will be voted upon to include the "rate of compensation of the investment adviser," the "aggregate amount of the investment adviser's fees," a description of the "terms of the contract to be acted upon," and, if a change in the advisory fee is proposed, the existing and proposed fees and the difference between the two fees.

5. Regulation S–X sets forth the requirements for financial statements required to be included as part of investment company registration statements and shareholder reports filed with the Commission. Sections 6–07(2)(a), (b), and (c) of Regulation S–X require that investment companies include in their financial statements information about investment advisory fees.

6. Section 6(b) of the Act provides that the Commission may by order upon application exempt any employees' securities company from the provisions of the Act, as well as the rules and regulations thereunder, "if and to the extent that such exemption is consistent with the protection of investors." Applicants believe that their requested relief meets this standard.

7. Applicants assert that under the proposed arrangement, the Adviser would not face any of the types of conflicts that the typical adviser faces in managing a registered investment company. Applicants assert that the Adviser shares a substantial community of interest with the Funds' shareholders, all of whom are current or former employees of GE, the Adviser, and other affiliates of GE, including immediate family members of these employees, as well as with the Board members (who themselves are officers or employees of GE). Applicants also argue that GE, the Adviser, and the Board members have a strong interest in assuring that the Funds are well managed because of their belief that the success of these Funds helps to boost employee morale and maintain satisfactory employee/retiree relations, both of which are matters of vital importance to GE. Applicants state that the Adviser provides investment management and other services to the Funds at cost, and does not profit in any way from doing so. Applicants assert that because of the alignment of their respective interests and the compensation terms under which the Adviser provides services to the Funds, the Adviser is motivated at all times to act in the best interests of shareholders. Applicants believe that by acting for the benefit of shareholders, the Adviser and the members of the Board are also acting to protect substantially corresponding interests of their own.

8. Applicants further state that shareholders would expect the Adviser and the Board to select the Subadviser for a Fund that is best suited to achieve the Fund's investment objective. Applicants assert that, from the perspective of the investor, the role of Subadvisers is substantially equivalent to the role of the individual portfolio managers employed by traditional investment company advisory firms. Applicants believe that permitting the Adviser to select, supervise and evaluate Subadvisers without incurring unnecessary delay or expense would benefit Fund investors because it would allow the Funds to operate more efficiently.

9. Applicants assert that many investment advisers charge their customers for advisory services according to a "posted" fee schedule. Applicants state that while investment advisers typically are willing to negotiate fees that are lower than those posted on the schedule, they are reluctant to do so where the negotiated fees are disclosed to other prospective and existing customers. Applicants submit that the requested relief will allow the Adviser to negotiate more effectively with each Subadviser that is not an Affiliated Subadviser.

Applicants' Conditions

Applicants agree that any order granting the requested relief will be subject to the following conditions:

1. Before a Fund may rely on the order requested in the application, the operation of the Fund in the manner described in the application will be approved by a majority of the Fund's outstanding voting securities, as defined in the Act, or, in the case of a Fund whose public shareholders purchase shares on the basis of a prospectus containing the disclosure contemplated by condition 2 below, by the sole initial shareholder before offering the Fund's shares to the public.

[2] Form N–1A was recently amended by the Commission, effective March 31, 2009, and Item 14(a)(3) should be read to refer to Item 19(a)(3) for each Fund when that Fund begins using the revised form.

2. The prospectus for each Fund will disclose the existence, substance, and effect of any order granted pursuant to the application. Each Fund will hold itself out to the public as employing the management structure described in the application. The prospectus will prominently disclose that the Adviser has ultimate responsibility (subject to oversight by the Board) to oversee the Subadvisers and recommend their hiring, termination, and replacement.

3. Within 90 days of the hiring of a new Subadviser, the affected Fund's shareholders will be furnished all information about the new Subadviser that would be included in a proxy statement, except as modified to permit Aggregate Fee Disclosure. This information will include Aggregate Fee Disclosure and any change in such disclosure caused by the addition of the new Subadviser. To meet this obligation, the Fund will provide shareholders within 90 days of the hiring of a new Subadviser with an information statement meeting the requirements of Regulation 14C, Schedule 14C, and Item 22 of Schedule 14A under the 1934 Act, except as modified by the order to permit Aggregate Fee Disclosure.

4. The Adviser will not enter into a Subadvisory Agreement with an Affiliated Subadviser unless the agreement provides that the Affiliated Subadviser's compensation will be limited to reimbursement of its reasonable costs of providing subadvisory services to the particular Fund, without any element of profit.

5. When a Subadviser change is proposed for a Fund with an Affiliated Subadviser, the Board will make a separate finding, reflected in the applicable Board minutes, that such change is in the best interests of the Fund and its shareholders and does not involve a conflict of interest from which the Adviser or the Affiliated Subadviser derives an inappropriate advantage.

6. The Adviser will provide general management services to each Fund, including overall supervisory responsibility for the general management and investment of the Fund's assets and, subject to review and approval of the Board, will (a) Set each Fund's overall investment strategies; (b) evaluate, select and recommend Subadvisers to manage all or a part of a Fund's assets; (c) when appropriate, allocate and reallocate a Fund's assets among multiple Subadvisers; (d) monitor and evaluate the performance of Subadvisers; and (e) implement procedures reasonably designed to ensure that the Subadvisers comply with each Fund's investment objective, policies and restrictions.

7. No director, trustee or officer of any Fund, or director or officer of the Adviser, will own directly or indirectly (other than through a pooled investment vehicle that is not controlled by such person) any interest in a Subadviser, except for (a) ownership of interests in the Adviser or any entity that controls, is controlled by, or is under common control with the Adviser; or (b) ownership of less than 1% of the outstanding securities of any class of equity or debt of a publicly traded company that is either a Subadviser or an entity that controls, is controlled by or is under common control with a Subadviser.

8. Each Fund will disclose in its registration statement the Aggregate Fee Disclosure.

For the Commission, by the Division of Investment Management, under delegated authority.

Florence E. Harmon,

Deputy Secretary.

[FR Doc. 2010–24824 Filed 10–1–10; 8:45 am]

BILLING CODE 8010–01–P

SECURITIES AND EXCHANGE COMMISSION

[Investment Company Act Release No. 29446; 813–358]

RIEF RMP LLC and Renaissance Technologies LLC; Notice of Application

September 28, 2010.

AGENCY: Securities and Exchange Commission ("Commission").

ACTION: Notice of application for an order under sections 6(b) and 6(e) of the Investment Company Act of 1940 (the "Act") granting an exemption from all provisions of the Act, except section 9, and sections 36 through 53, and the rules and regulations under the Act. With respect to sections 17 and 30 of the Act, and the rules and regulations thereunder, and rule 38a–1 under the Act, the exemption is limited as set forth in the application.

Summary of Application: Applicants request an order to exempt certain limited liability companies and other investment vehicles formed for the benefit of eligible employees of Renaissance Technologies LLC ("RTC") and its affiliates from certain provisions of the Act. Each limited partnership or other investment vehicle will be an "employees' securities company" within the meaning of section 2(a)(13) of the Act.

Applicants: RIEF RMP LLC ("RMP") and RTC.

DATES: The application was filed on August 2, 2005 and amended on May 3, 2007, May 14, 2008, and June 4, 2010. Applicants have agreed to file an amendment during the notice period, the substance of which is reflected in this notice.

Hearing or Notification of Hearing: An order granting the application will be issued unless the Commission orders a hearing. Interested persons may request a hearing by writing to the Commission's Secretary and serving applicant with a copy of the request, personally or by mail. Hearing requests should be received by the Commission by 5:30 p.m. on October 25, 2010, and should be accompanied by proof of service on applicant, in the form of an affidavit or, for lawyers, a certificate of service. Hearing requests should state the nature of the writer's interest, the reason for the request, and the issues contested. Persons who wish to be notified of a hearing may request notification by writing to the Commission's Secretary.

ADDRESSES: Secretary, U.S. Securities and Exchange Commission, 100 F Street, NE., Washington, DC 20549–1090; Applicants, 800 Third Avenue, New York, New York 10022.

FOR FURTHER INFORMATION CONTACT: Deepak T Pai, Senior Counsel, at (202) 551–6876, or Mary Kay Frech, Branch Chief, at (202) 551–6821 (Division of Investment Management, Office of Investment Company Regulation).

Supplementary Information: The following is a summary of the application. The complete application may be obtained via the Commission's Web site by searching for the file number, or an applicant using the Company name box, at *http://www.sec.gov/search/search.htm* or by calling (202) 551–8090.

Applicants' Representations:

1. RTC is registered as an investment adviser under the Investment Advisers Act of 1940 (the "Advisers Act") and as a commodity pool operator and commodity trading adviser with the Commodity Futures Trading Commission under the Commodity Exchange Act, and is a member of the National Futures Association. RTC provides investment management services primarily to institutional investors as well as its own employees and related parties and is the general partner, managing member or investment adviser to several private funds. RTC and its "affiliates," as defined in rule 12b–2 under the Securities Exchange Act of 1934 (the

"1934 Act"), are referred to collectively as "RTC Group."

2. RTC has organized RMP as a Delaware limited liability company, and RTC may in the future organize additional private investment funds ("Future Pooled Investment Vehicles," and together with RMP, "Pooled Investment Vehicles") identical in all respects to RMP (other than investment objectives and strategies and form of organization) for the benefit of the same categories of eligible investors as those investing in RMP. RMP was formed to benefit Eligible Employees (as defined below) and other eligible investors as part of a program by RTC to (a) create capital building opportunities that are competitive with those at other investment management firms, and (b) facilitate the recruitment and retention by RTC of high caliber personnel and key administrative employees. Investing in the Pooled Investment Vehicles will be voluntary. RMP will operate as a non-diversified, closed-end management investment company. Membership interests ("Interests") in RMP will be offered in two series—A and B ("Series"). Each Series will be identical to the other except for the fees each will pay to RTC for the services rendered to RMP by RTC. RMP and each Future Pooled Investment Vehicle will be an "employees' securities company" as that term is defined in section 2(a)(13) of the Act.

3. RTC serves as the managing member of RMP and will serve as the general partner, managing member or investment adviser ("Managing Member") of the Future Pooled Investment Vehicles. RTC will control each Pooled Investment Vehicle within the meaning of section 2(a)(9) of the Act, and will have the authority to make all decisions regarding the acquisition, management and disposition of the portfolio investments for Pooled Investment Vehicles. RTC will be paid an advisory fee for its services, which may be determined as a percentage of assets under management. In addition, RTC may be entitled to a performance-based fee or allocation based on net capital appreciation in addition to the fixed fee.[1]

4. RTC, as Managing Member, and any other person acting for or on behalf of the Pooled Investment Vehicles shall act in the best interest of the Pooled Investment Vehicles and their Participants (as defined below). Whenever RTC or any other person acting for or on behalf of the Pooled Investment Vehicles is required or permitted to make a decision, take or approve an action, or omit to do any of the foregoing in such person's discretion, then that person shall exercise such discretion in accordance with reasonableness and good faith and any fiduciary duties owed to the Pooled Investment Vehicles and the Participants. The organizational documents for, and any other contractual arrangements regarding, a Pooled Investment Vehicle will not contain any provision which protects or purports to protect RTC or its delegates against any liability to the Pooled Investment Vehicles or the Participants to which such person would otherwise be subject by reason of willful misfeasance, bad faith, or gross negligence in the performance of such person's duties, or by reason of such person's reckless disregard of such person's obligations and duties under such contract or organizational documents.

5. Interests in the Pooled Investment Vehicles will be offered to Eligible Investors (as defined below) without registration in reliance on section 4(2) of the Securities Act of 1933 (the "1933 Act") or Regulation D under the 1933 Act. RTC must reasonably believe, before offering an Interest to an Eligible Investor, that such person has the knowledge, sophistication and experience in business and financial matters to be capable of evaluating the merits and risks of the investment, is able to bear the economic risk of such investment, and is able to afford a complete loss of such investment.

6. "Eligible Investors" who may invest in the Pooled Investment Vehicles are: (a) Individuals who are current or former employees, officers or directors of the RTC Group ("Eligible Employees"); (b) a spouse, child, spouse of a child, brother, sister, parent or grandchild of an individual who is an Eligible Employee ("Eligible Family Members"); (c) persons or entities whom the RTC Group has engaged on retainer to provide services and professional expertise on an ongoing basis as regular consultants in business or legal advisers to the RTC Group and who share a community of interest with RTC and RTC employees ("Consultants"); and (d) either (i) trusts or other investment vehicles of which the trustees or grantors are Eligible Employees or Eligible Employees together with their Eligible Family Members, (ii) trusts or other investment vehicles established solely for the benefit of Eligible Employees, Consultants or Eligible Family Members, or (iii) partnerships, corporations or other entities all of the voting power of which is controlled by Eligible Employees ("Qualified Investment Entities") (together with Eligible Employees, Eligible Family Members and Consultants, "Eligible Investors").

7. All Eligible Investors investing in RMP must be "accredited investors" as defined in rule 501(a)(5) or 501(a)(6) of Regulation D, except that up to 35 Eligible Employees who are non-accredited investors may invest in RMP provided they fall into one of the following categories: (a) Eligible Employees who (i) Have a graduate degree in business, law or accounting, (ii) have a minimum of five years of consulting, investment banking or similar business experience, and (iii) have had reportable income from all sources of at least $100,000 in each of the two most recent years and have a reasonable expectation of income from all sources of at least $140,000 in the years in which the Eligible Employee invests in a Pooled Investment Vehicle; or (b) Eligible Employees who are "knowledgeable employees," as defined in rule 3c–5 under the Act, of the Pooled Investment Vehicle (with the Pooled Investment Vehicle treated as though it were a "covered company" for purposes of the rule). In addition, an Eligible Employee in category (a) above will not be permitted to invest in any year more than 10% of his or her income from all sources for the immediately preceding year in the aggregate in the Pooled Investment Vehicle and in all other Pooled Investment Vehicles in which that Eligible Employee has previously invested.

8. A Qualified Investment Entity must be either (a) an accredited investor as defined in rule 501(a) of Regulation D, or (b) an entity for which an Eligible Employee is the settlor and principal investment decisionmaker and is counted toward the limit on the 35 non-accredited investors that may invest in a Pooled Investment Vehicle.

9. The specific investment objectives and strategies for a particular Pooled Investment Vehicle will be set forth in the private placement memorandum relating to the Interests in the Pooled Investment Vehicles being offered, which will be delivered to each offeree at or before the sale of an Interest. Each Pooled Investment Vehicle will furnish to those Eligible Investors who are accepted as investors ("Participants") annual financial statements audited by its registered public accounting firm and unaudited monthly reports of the results

[1] Any performance fee or allocation will be charged only if permitted by rule 205–3 under the Advisers Act.

of its investments.[2] In addition, RTC will cause a report to be sent to each Participant in a Pooled Investment Vehicle, as soon as practicable after the end of each fiscal year, setting forth the information with respect to his or her share of income, gains, losses, credits and other items for federal and state income tax purposes.

10. Interests in the Pooled Investment Vehicles will not be transferable except with the express consent of RTC and then only to Eligible Investors. No sales load or fees of any kind will be charged in connection with the sale of Interests. Each private placement memorandum of the Pooled Investment Vehicles will describe the terms by which a Participant may transfer an Interest or withdraw from the Pooled Investment Vehicle. In addition, RTC has the right to cause any Participant to withdraw without cause. Upon withdrawal, the Pooled Investment Vehicles will pay to the Participant the net asset value of the Interest determined at the time of withdrawal, as determined in good faith by RTC.

11. RTC intends to structure an investment program in which the Pooled Investment Vehicles will co-invest in portfolio companies with RTC or other pooled investment funds organized primarily for the benefit of investors who are not affiliated with RTC over which RTC exercises investment discretion ("Third Party Funds").[3] Side-by-side investments by a Third Party Fund, or by an RTC entity in a transaction in which the RTC investment was made pursuant to a contractual obligation to a Third Party Fund, will not be subject to the restrictions contained in condition 3. All other side-by-side investments will be subject to the restrictions contained in condition 3.

12. RMP and other Pooled Investment Vehicles may borrow money from others. Any indebtedness of the Pooled Investment Vehicles will be the debt of such Pooled Investment Vehicles and without recourse to the Participants. The Pooled Investment Vehicles will not borrow from any person if the borrowing would cause any person other than an Eligible Investor to own securities of the Pooled Investment Vehicles (other than short term paper).

13. The Pooled Investment Vehicles will not purchase or otherwise acquire any security issued by any registered investment company if the Pooled Investment Vehicles immediately after such purchase or acquisition will own in the aggregate more than 3% of the total outstanding voting stock of such investment company.

Applicants' Legal Analysis:

1. Section 6(b) of the Act provides, in part, that the Commission will exempt employees' securities companies from the provisions of the Act to the extent that the exemption is consistent with the protection of investors. Section 6(b) provides that the Commission will consider, in determining the provisions of the Act from which the company should be exempt, the company's form of organization and capital structure, the persons owning and controlling its securities, the price of the company's securities and the amount of any sales load, how the company's funds are invested, and the relationship between the company and the issuers of the securities in which it invests. Section 2(a)(13) defines an employees' securities company, in relevant part, as any investment company all of whose securities (other than short-term paper) are beneficially owned (a) by current or former employees, or persons on retainer, of one or more affiliated employers, (b) by immediate family members of such persons, or (c) by such employer or employers together with any of the persons in (a) or (b).

2. Section 7 of the Act generally prohibits investment companies that are not registered under section 8 of the Act from selling or redeeming their securities. Section 6(e) of the Act provides that, in connection with any order exempting an investment company from any provision of section 7, certain provisions of the Act, as specified by the Commission, will be applicable to the company and other persons dealing with the company as though the company were registered under the Act. Applicants request an order under sections 6(b) and 6(e) of the Act exempting RMP and each Future Pooled Investment Vehicle from all provisions of the Act, except section 9 and sections 36 through 53 of the Act, and the rules and regulations under the Act. With respect to sections 17 and 30 of the Act, and the rules and regulations thereunder, and rule 38a–1 under the Act, the exemption is limited as set forth in the application.

3. Section 17(a) of the Act generally prohibits any affiliated person of a registered investment company, or any affiliated person of an affiliated person, acting as principal, from knowingly selling or purchasing any security or other property to or from the company. Applicants request an exemption from section 17(a) to permit: (a) RTC or a Third Party Fund (or any affiliated person of RTC or a Third Party Fund), acting as principal, to engage in any transaction directly or indirectly with a Pooled Investment Vehicle or any company controlled by a Pooled Investment Vehicle; and (b) the Pooled Investment Vehicles to invest in or engage in any transaction with any RTC entity (or any affiliated person of such entity), acting as principal, (i) in which the Pooled Investment Vehicles, any company controlled by a Pooled Investment Vehicle, or any RTC entity or Third Party Fund has invested or will invest, or (ii) with which the Pooled Investment Vehicles, any company controlled by a Pooled Investment Vehicle or any RTC entity or Third Party Fund is or will become affiliated.

4. Applicants submit that an exemption from section 17(a) is consistent with the purposes of the Pooled Investment Vehicles and the protection of investors. Applicants state that Participants in the Pooled Investment Vehicles will be fully informed of the possible extent of the Pooled Investment Vehicles' co-investing with RTC and Third Party Funds. Applicants also state that, as professionals employed in the investment management business, or in administrative, financial, accounting, legal or operational activities related thereto, or otherwise familiar with RTC, Eligible Investors will be able to understand and evaluate the attendant risks. Applicants assert that the community of interest among the Eligible Investors investing in the Pooled Investment Vehicles, on the one hand, and RTC, on the other hand, will protect Participants against any risk of abuse.

5. Section 17(d) of the Act and rule 17d–1 under the Act prohibit any affiliated person of a registered investment company, or any affiliated person of such person, acting as principal, from participating in any joint arrangement with the registered investment company unless authorized by the Commission. Applicants request an order pursuant to section 17(d) and rule 17d–1 to the extent necessary to permit affiliated persons of RMP and the Future Pooled Investment Vehicles (including, without limitation, RTC, affiliated persons of RTC and a Third Party Fund), or affiliated persons of any of these persons to participate in, or effect any transaction in connection with, any joint enterprise or other joint arrangement or profit-sharing plan in which any Pooled Investment Vehicle or a company controlled by any Pooled Investment Vehicle is a participant.

[2] "Audit" shall have the meaning defined in rule 1–02(d) of Regulation S–X.

[3] The investment objectives and program of one such Third Party Fund, Renaissance Institutional Equities Fund LLC ("RIEF"), will be substantially similar to RMP's investment objectives and program.

6. Applicants assert that compliance with section 17(d) would prevent RMP and the Future Pooled Investment Vehicles from achieving their principal purpose, which is to provide Eligible Employees a vehicle through which they may invest in the same securities as RIEF or another Third Party Fund. Applicants believe that if RMP's or any Future Pooled Investment Vehicle's co-investments with RTC and its affiliated persons and affiliated persons of its affiliated persons are prohibited, the appeal of RMP and Future Pooled Investment Vehicles for the Eligible Investors would be significantly diminished. Eligible Investors have indicated a desire to participate in such co-investment opportunities because they believe that: (a) RTC can analyze investment opportunities to an extent that individual employees would have neither the time nor resources to duplicate; (b) investments made by Third Party Funds managed by RTC may not be generally available to or available on the same terms and conditions to investors even of the financial status of the Eligible Investors; and (c) Eligible Investors will be able to pool their investment resources, thus achieving greater diversification of their individual investment portfolios. Applicants further believe that the flexibility to structure co-investments and joint investments will not involve abuses of the type section 17(d) and rule 17d–1 were designed to prevent.

7. Applicants believe that the interests of the Eligible Employees participating in the Pooled Investment Vehicles will be adequately protected even in situations where condition 3 does not apply. In structuring a Third Party Fund, it is common for the unaffiliated investors of such fund to require that RTC invest its own capital in fund investments, either through the fund or on a side-by-side basis, and that RTC investments be subject to substantially the same terms as those applicable to the fund's investments. Applicants believe it is important that the interests of the Third Party Fund take priority over the interests of the Pooled Investment Vehicles, and that the activities of the Third Party Fund not be burdened or otherwise affected by activities of the Pooled Investment Vehicles. If condition 3 were to apply to RTC's investment in these situations, the effect of such a requirement would be to indirectly burden the Third Party Fund with the requirements of condition 3. In addition, applicants state that the relationship of RMP to RIEF or another Pooled Investment Vehicle to another Third Party Fund is fundamentally different from RMP's and the other Pooled Investment Vehicles' relationship to RTC. The focus of, and the rationale for, the protections contained in the requested relief are to protect the Pooled Investment Vehicles from any overreaching by RTC in the employer/employee context, whereas the same concerns are not present with respect to RMP and the other Pooled Investment Vehicles vis-à-vis the investors in RIEF or other Third Party Funds.

8. Section 17(f) of the Act designates the entities that may act as investment company custodians, and rule 17f–1 under the Act imposes certain requirements when the custodian is a member of a national securities exchange. Applicants request an exemption from section 17(f) and rule 17f–1 to permit the following exceptions from the requirements of rule 17f–1: (a) In lieu of compliance with rule 17f–1(b)(1), RMP and each Future Pooled Investment Vehicle will enter into a written customer and prime broker agreement with one or more broker-dealers each of whom is a member of the New York Stock Exchange LLC in substantially similar form to the form used by the subject prime broker(s);[4] (b) in lieu of compliance with rule 17f–1(b)(4), the Pooled Investment Vehicles' registered public accountant shall semi-annually reconcile the prime broker's statement of each Pooled Investment Vehicle's account with each Pooled Investment Vehicle's records of its holdings of cash and securities and issue to each Pooled Investment Vehicle a report on such reconciliation; (c) the Pooled Investment Vehicles will not comply with rule 17f–1(c), which requires transmitting to the Commission a copy of any contract executed pursuant to rule 17f–1; and (d) RTC as the Managing Member will approve the contracts required to be ratified by the board of directors in rule 17f–1(d). Applicants will comply with all other requirements of rule 17f–1.

9. Section 17(g) of the Act and rule 17g–1 under the Act generally require the bonding of officers and employees of a registered investment company who have access to its securities or funds. Rule 17g–1 requires that a majority of directors who are not interested persons take certain actions and give certain approvals relating to fidelity bonding. Applicants request instead that such actions and approvals be taken by RTC, regardless of whether it is deemed to be an interested person of such Pooled Investment Vehicles. Applicants state that because RTC will be considered an interested person of each Pooled Investment Vehicle, the Pooled Investment Vehicles could not comply with rule 17g–1 without the requested relief. Applicants also request an exemption from the requirements of paragraphs (g) and (h) of rule 17g–1 relating to the filing of copies of fidelity bonds and related information with the Commission and the provision of notices to the board of directors, and from the requirements of rule 17g–1(j)(3) that the board of directors of an investment company satisfy the fund governance standards defined in rule 0–1(a)(7). The Pooled Investment Vehicles will comply with all other requirements of rule 17g–1.

10. Section 17(j) of the Act and paragraph (b) of rule 17j–1 under the Act make it unlawful for certain enumerated persons to engage in fraudulent or deceptive practices in connection with the purchase or sale of a security held or to be acquired by a registered investment company. Rule 17j–1 also requires that every registered investment company adopt a written code of ethics and that every access person of a registered investment company report personal securities transactions. Applicants request an exemption from the provisions of rule 17j–1, except for the anti-fraud provisions of paragraph (b), because they are unnecessarily burdensome as applied to the Pooled Investment Vehicles and would serve little purpose in light of the community of interest among the Participants by virtue of their common association with RTC.

11. Applicants request an exemption from the requirements in sections 30(a), 30(b), and 30(e) of the Act, and the rules under those sections, that registered investment companies prepare and file with the Commission and mail to their shareholders certain periodic reports and financial statements. Applicants contend that the forms prescribed by the Commission for periodic reports have little relevance to the Pooled Investment Vehicles and would entail administrative and legal costs that outweigh any benefit to the Participants in the Pooled Investment Vehicles. Applicants request exemptive relief to the extent necessary to permit the Pooled Investment Vehicles to report annually to their Participants. Applicants also request an exemption from section 30(h) of the Act to the

[4] Almost all of the securities in which RMP and the Future Pooled Investment Vehicles will invest will be eligible for deposit in a securities depository registered as a clearing agency under the 1934 Act. There will be no physical segregation, and segregation will be accomplished by entries on the books and records of the prime broker and periodic account statements issued by the prime broker to RMP and each Future Pooled Investment Vehicle will reflect such recordation.

extent necessary to exempt RTC, directors and officers of RTC and any other persons who may be deemed members of an advisory board of the Pooled Investment Vehicles from filing Forms 3, 4 and 5 under section 16 of the 1934 Act with respect to their ownership of Interests in the Pooled Investment Vehicles. Applicants assert that, because there would be no trading market and the transfers of Interests are severely restricted, these filings are unnecessary for the protection of investors and burdensome to those required to make them.

12. Rule 38a–1 requires investment companies to adopt, implement and periodically review written policies reasonably designed to prevent violation of the federal securities laws and to appoint a chief compliance officer. RMP and Future Pooled Investment Vehicles will comply will rule 38a–1(a), (c) and (d), except that the board of directors of RTC, the Managing Member, will fulfill the responsibilities assigned to a fund's board of directors under the rule and, since all the members of RTC's board of directors would be considered interested persons, approval by a majority of the disinterested directors required by rule 38a–1 will not be obtained. In addition, because the board of directors of RTC does not have any disinterested directors, RMP and the Future Pooled Investment Vehicles will comply with the requirement in rule 38a–1(a)(4)(iv) that the chief compliance officer meet with the disinterested directors by having the chief compliance officer meet with the board of directors of RTC as constituted.

Applicants' Conditions:

Applicants agree that any order granting the requested relief will be subject to the following conditions:

1. Each proposed transaction otherwise prohibited by section 17(a) or section 17(d) of the Act and rule 17d–1 thereunder to which RMP or a Future Pooled Investment Vehicle is a party (the "Section 17 Transactions") will be effected only if RTC determines that:

(a) The terms of the Section 17 Transaction, including the consideration to be paid or received, are fair and reasonable to the Participants in the Pooled Investment Vehicle and do not involve overreaching of the Pooled Investment Vehicle or its Participants on the part of any person concerned; and

(b) The Section 17 Transaction is consistent with the interests of the Participants, the organizational documents of the Pooled Investment Vehicle, and the Pooled Investment Vehicle's reports to its Participants.

In addition, RTC will record and preserve a description of the Section 17 Transactions, the findings of RTC, the information or materials upon which the findings of RTC are based, and the basis for those findings. All such records will be maintained for the life of the Pooled Investment Vehicles and at least six years thereafter, and will be subject to examination by the Commission and its staff. The Pooled Investment Vehicles will preserve the accounts, books and other documents required to be maintained in an easily accessible place for the first two years.

2. In connection with the Section 17 Transactions, RTC will adopt, and periodically review and update, procedures designed to ensure that reasonable inquiry is made, prior to the consummation of any Section 17 Transaction, with respect to the possible involvement in the transaction of any Affiliated Person or promoter of or principal underwriter for the Pooled Investment Vehicles, or any affiliated person of any such person, promoter or principal underwriter.

3. RTC will not invest the funds of a Pooled Investment Vehicle in any investment in which a "Co-Investor" (as defined below) has acquired or proposes to acquire the same class of securities of the same issuer, where the investment involves a joint enterprise or other joint arrangement within the meaning of rule 17d–1 in which a Pooled Investment Vehicle and the Co-Investor are participants, unless any such Co-Investor, prior to disposing of all or part of its investment: (a) Gives RTC sufficient, but not less than one day's notice of its intent to dispose of its investment; and (b) refrains from disposing of its investment unless any Pooled Investment Vehicle has the opportunity to dispose of its investment prior to or concurrently with, and on the same terms as, and *pro rata* with the Co-Investor. The term "Co-Investor" with respect to RMP or a Future Pooled Investment Vehicle means any person who is: (a) An affiliated person (as defined in section 2(a)(3) of the Act) of the Pooled Investment Vehicle (other than a Third Party Fund); (b) RTC; (c) an officer or director of RTC; or (d) an entity (other than a Third Party Fund) in which RTC acts as a general partner, managing member, trustee or has a similar capacity to control the sale or other disposition of the entity's securities.

The restrictions contained in this condition, however, will not be deemed to limit or prevent the disposition of an investment by a Co-Investor: (a) To its direct or indirect wholly-owned subsidiary, to any company (a "Parent") of which the Co-Investor is a direct or indirect wholly-owned subsidiary, or to a direct or indirect wholly-owned subsidiary of its Parent; (b) to immediate family members of the Co-Investor or to a trust or other investment vehicle established for any Co-Investor or any such family member; (c) when the investment is comprised of securities that are listed on any exchange registered as a national securities exchange under section 6 of the 1934 Act; (d) when the investment is comprised of securities that are national market system securities pursuant to section 11A(a)(2) of the 1934 Act and rule 600(a) of Regulation NMS thereunder; (e) when the securities are government securities as defined in section 2(a)(16) of the Act; and (f) when the investment is comprised of securities that are listed on or traded on any foreign securities exchange or board of trade that satisfies regulatory requirements under the law of the jurisdiction in which such foreign securities exchange or board of trade is organized similar to those that apply to a national securities exchange or a national market system for securities.

4. The Pooled Investment Vehicles and RTC will maintain and preserve, for the life of each Pooled Investment Vehicle and at least six years thereafter, such accounts, books, and other documents as constitute the record forming the basis for the audited financial statements that are to be provided to the Participants in the Pooled Investment Vehicles, and each annual report of each Pooled Investment Vehicle required to be sent to such Participants, and agree that all such records will be subject to examination by the Commission and its staff.[5]

5. Each Pooled Investment Vehicle will send to each Participant in such Pooled Investment Vehicle who had an interest in the Pooled Investment Vehicle at any time during the fiscal year then ended financial statements of the Pooled Investment Vehicle audited by the Pooled Investment Vehicle's independent public accountants. At the end of each fiscal year, RTC will make a valuation or have a valuation made of all of the assets of the Pooled Investment Vehicle as of such fiscal year end in a manner consistent with customary practice with respect to the valuation of assets of the kind held by the Pooled Investment Vehicle. In addition, within 120 days after the end of each Pooled Investment Vehicle's

[5] RMP and the Pooled Investment Vehicles will preserve the accounts, books and other documents required to be maintained in an easily accessible place for the first two years.

fiscal year or as soon as practicable thereafter, RTC will send a report to each person who was a Participant in a Pooled Investment Vehicle at any time during the fiscal year then ended, setting forth such tax information as shall be necessary for the preparation by the Participant of that Participant's federal and state income tax returns and a report of the investment activities of the Pooled Investment Vehicle during that fiscal year.

6. If any Pooled Investment Vehicle makes purchases or sales from or to an entity affiliated with such Pooled Investment Vehicle by reason of an officer, director or employee of RTC (a) serving as an officer, director, general partner or investment adviser of the entity, or (b) having a 5% or more investment in the entity, such individual will not participate in the Pooled Investment Vehicle's determination of whether or not to effect the purchase or sale.

For the Commission, by the Division of Investment Management, under delegated authority.

Florence E. Harmon,

Deputy Secretary.

[FR Doc. 2010–24787 Filed 10–1–10; 8:45 am]

BILLING CODE 8010–01–P

SECURITIES AND EXCHANGE COMMISSION

Sunshine Act Meeting

Notice is hereby given, pursuant to the provisions of the Government in the Sunshine Act, Public Law 94–409, that the Securities and Exchange Commission will hold a Closed Meeting on Monday, October 4, 2010 at 10 a.m.

Commissioners, Counsel to the Commissioners, the Secretary to the Commission, and recording secretaries will attend the Closed Meeting. Certain staff members who have an interest in the matters also may be present.

The General Counsel of the Commission, or his designee, has certified that, in his opinion, one or more of the exemptions set forth in 5 U.S.C. 552b(c)(10) and 17 CFR 200.402(a)(10), permit consideration of the scheduled matter at the Closed Meeting.

Commissioner Paredes, as duty officer, voted to consider the item listed for the Closed Meeting in closed session, and determined that no earlier notice thereof was possible.

The subject matter of the Closed Meeting scheduled for Monday, October 4, 2010 will be: A litigation matter.

At times, changes in Commission priorities require alterations in the scheduling of meeting items.

For further information and to ascertain what, if any, matters have been added, deleted or postponed, please contact: The Office of the Secretary at (202) 551–5400.

Dated: September 30, 2010.

Elizabeth M. Murphy

Secretary.

[FR Doc. 2010–24982 Filed 9–30–10; 4:15 pm]

BILLING CODE 8010–01–P

SECURITIES AND EXCHANGE COMMISSION

Sunshine Act Meeting

Notice is hereby given, pursuant to the provisions of the Government in the Sunshine Act, Public Law 94–409, that the Securities and Exchange Commission will hold a Closed Meeting on Wednesday, October 6, 2010 at 1:00 p.m.

Commissioners, Counsel to the Commissioners, the Secretary to the Commission, and recording secretaries will attend the Closed Meeting. Certain staff members who have an interest in the matters also may be present.

The General Counsel of the Commission, or his designee, has certified that, in his opinion, one or more of the exemptions set forth in 5 U.S.C. 552b(c)(3), (5), (7), 9(B) and (10) and 17 CFR 200.402(a)(3), (5), (7), 9(ii) and (10), permit consideration of the scheduled matters at the Closed Meeting.

Commissioner Paredes, as duty officer, voted to consider the items listed for the Closed Meeting in a closed session.

The subject matter of the Closed Meeting scheduled for Wednesday, October 6, 2010 will be:

Institution and settlement of injunctive actions;

Institution and settlement of administrative proceedings; and other matters relating to enforcement proceedings.

At times, changes in Commission priorities require alterations in the scheduling of meeting items.

For further information and to ascertain what, if any, matters have been added, deleted or postponed, please contact:

The Office of the Secretary at (202) 551–5400.

Dated: September 29, 2010.

Elizabeth M. Murphy,

Secretary.

[FR Doc. 2010–24885 Filed 9–30–10; 11:15 am]

BILLING CODE 8010–01–P

SECURITIES AND EXCHANGE COMMISSION

[Release No. 34–62997; File No. SR–CBOE–2010–088]

Self-Regulatory Organizations; Chicago Board Options Exchange, Incorporated; Notice of Filing and Immediate Effectiveness of Proposed Rule Change Related to Dates for Pilot Programs

September 28, 2010.

Pursuant to Section 19(b)(1) of the Securities Exchange Act of 1934 (the "Act"),[1] and Rule 19b–4 thereunder,[2] notice is hereby given that on September 21, 2010, the Chicago Board Options Exchange, Incorporated ("Exchange" or "CBOE") filed with the Securities and Exchange Commission (the "Commission") the proposed rule change as described in Items I and II below, which Items have been prepared by the Exchange. The Exchange has designated this proposal as one constituting a stated policy, practice, or interpretation with respect to the meaning, administration, or enforcement of an existing rule under Section 19(b)(3)(A)(i) of the Act, and Rule 19b–4(f)(1) thereunder, which renders the proposal effective upon filing with the Commission. The Commission is publishing this notice to solicit comments on the proposed rule change from interested persons.

I. Self-Regulatory Organization's Statement of the Terms of Substance of the Proposed Rule Change

The Exchange proposes to make technical amendments to its rules to insert the specific dates for two pilot programs. The text of the proposed rule change is available on the Exchange's Web site (*http://www.cboe.org/Legal*), at the Exchange's Office of the Secretary, and at the Commission.

II. Self-Regulatory Organization's Statement of the Purpose of, and Statutory Basis for, the Proposed Rule Change

In its filing with the Commission, the self-regulatory organization included statements concerning the purpose of and basis for the proposed rule change and discussed any comments it received on the proposed rule change. The text of those statements may be examined at the places specified in Item IV below. The Exchange has prepared summaries, set forth in sections A, B, and C below, of the most significant parts of such statements.

[1] 15 U.S.C. 78s(b)(1).

[2] 17 CFR 240.19b–4.

A. Self-Regulatory Organization's Statement of the Purpose of, and Statutory Basis for, the Proposed Rule Change

1. Purpose

CBOE proposes to make technical amendments to its rules to insert specific dates for two pilot programs.

First, the Commission has approved the Exchange's proposal to modify the clearly erroneous policy of the CBOE Stock [sic] on a pilot basis.[3] This rule change proposes to amend the text of Rule 52.4, *Clearly Erroneous Policy,* to insert the approval date of the pilot program, which is September 10, 2010.

Second, the Commission has approved the Exchange's proposal to establish a pilot program that would permit P.M.-settled options on broad-based indexes that expire: (a) on any Friday of the month, other than the third Friday-of-the-month, and (b) the last trading[4] [sic] of the month ("EOW/EOM Pilot Program") under a 14-month pilot program.[5] This rule change proposes to amend the text of Rule 29.4(e)[6] [sic], *Terms of Index Option Contracts,* to insert the specific conclusion date of the EOW/EOM Pilot Program, which is December 14, 2011.[7]

2. Statutory Basis

The basis under the Act for this proposed rule change is the requirement under Section 6(b)(5)[8] that an exchange have rules that are designed to promote just and equitable principles of trade, and to remove impediments to and perfect the mechanism for a free and open market and a national market system, and, in general, to protect investors and the public interest. In particular, the proposed rule change seeks to update rule text to insert specific dates for two pilot programs in a manner that is consistent with the original approval orders of the pilot programs.

B. Self-Regulatory Organization's Statement on Burden on Competition

CBOE does not believe that the proposed rule change will impose any burden on competition not necessary or appropriate in furtherance of the purposes of the Act.

C. Self-Regulatory Organization's Statement on Comments on the Proposed Rule Change Received From Members, Participants, or Others

The Exchange neither solicited nor received comments on the proposal.

III. Date of Effectiveness of the Proposed Rule Change and Timing for Commission Action

The foregoing proposed rule change will take effect upon filing with the Commission pursuant to Section 19(b)(3)(A)(i) of the Act[9] and Rule 19b–4(f)(1) thereunder,[10] because it constitutes a stated policy, practice, or interpretation with respect to the meaning, administration, or enforcement of an existing rule.

At any time within 60 days of the filing of the proposed rule change, the Commission summarily may temporarily suspend such rule change if it appears to the Commission that such action is necessary or appropriate in the public interest, for the protection of investors, or otherwise in furtherance of the purposes of the Act.

IV. Solicitation of Comments

Interested persons are invited to submit written data, views, and arguments concerning the foregoing, including whether the proposed rule change is consistent with the Act. Comments may be submitted by any of the following methods:

Electronic Comments

- Use the Commission's Internet comment form (*http://www.sec.gov/rules/sro.shtml*); or
- Send an e-mail to *rule-comments@sec.gov.* Please include File No. SR–CBOE–2010–088 on the subject line.

Paper Comments

- Send paper comments in triplicate to Elizabeth M. Murphy, Secretary, Securities and Exchange Commission, 100 F Street, NE., Washington, DC 20549–1090.

All submissions should refer to File No. SR–CBOE–2010–088. This file number should be included on the subject line if e-mail is used. To help the Commission process and review your comments more efficiently, please use only one method. The Commission will post all comments on the Commission's Web site (*http://www.sec.gov/rules/sro.shtml*). Copies of the submission, all subsequent amendments, all written statements with respect to the proposed rule change that are filed with the Commission, and all written communications relating to the proposed rule change between the Commission and any person, other than those that may be withheld from the public in accordance with the provisions of 5 U.S.C. 552, will be available for website viewing and printing in the Commission's Public Reference Room, 100 F Street, NE., Washington, DC 20549, on official business days between the hours of 10 a.m. and 3 p.m. Copies of such filing also will be available for inspection and copying at the principal office of CBOE. All comments received will be posted without change; the Commission does not edit personal identifying information from submissions. You should submit only information that you wish to make available publicly. All submissions should refer to File No. SR–CBOE–2010–088 and should be submitted on or before October 25, 2010.

For the Commission, by the Division of Trading and Markets, pursuant to delegated authority.[11]

Florence E. Harmon,

Deputy Secretary.

[FR Doc. 2010–24770 Filed 10–1–10; 8:45 am]

BILLING CODE 8010–01–P

[3] *See* Securities Exchange Act Release No. 62886 (September 10, 2010) (approving SR–CBOE–2010–056).

[4] The Commission notes that the correct reference is to the "last trading *day* of the month."

[5] *See* Securities Exchange Act Release No. 62911 (September 14, 2010) (approving SR–CBOE–2009–075).

[6] The Commission notes that the correct rule number is Rule 24.9(e).

[7] Previously the rule text indicated that the Exchange would insert the date 14 months from the next full month from approval, which approval occurred on September 14, 2010. *See supra* note 5.

[8] 15 U.S.C. 78f(b)(5).

[9] 15 U.S.C. 78s(b)(3)(A)(i).

[10] 17 CFR 240.19b–4(f)(1).

[11] 17 CFR 200.30–3(a)(12).

DEPARTMENT OF STATE

[Public Notice 7193]

Culturally Significant Objects Imported for Exhibition Determinations: "Expanding the Story With Four Greek Vases"

SUMMARY: Notice is hereby given of the following determinations: Pursuant to the authority vested in me by the Act of October 19, 1965 (79 Stat. 985; 22 U.S.C. 2459), Executive Order 12047 of March 27, 1978, the Foreign Affairs Reform and Restructuring Act of 1998 (112 Stat. 2681, *et seq.;* 22 U.S.C. 6501 note, *et seq.*), Delegation of Authority No. 234 of October 1, 1999, and Delegation of Authority No. 236–3 of August 28, 2000, I hereby determine that the objects to be included in the exhibition "Expanding the Story with Four Greek Vases," imported from abroad for temporary exhibition within the United States, are of cultural significance. The objects are imported pursuant to a loan agreement with the foreign owner or custodian. I also determine that the exhibition or

display of the exhibit objects at the Art Institute of Chicago, Chicago, Illinois, from on or about October 18, 2010, until on or about September 30, 2013, and at possible additional exhibitions or venues yet to be determined, is in the national interest. I have ordered that Public Notice of these Determinations be published in the **Federal Register**.

FOR FURTHER INFORMATION CONTACT: For further information, including a list of the exhibit objects, contact Paul W. Manning, Attorney-Adviser, Office of the Legal Adviser, U.S. Department of State (telephone: 202–632–6469). The mailing address is U.S. Department of State, SA–5, L/PD, Fifth Floor (Suite 5H03), Washington, DC 20522–0505.

Dated: September 27, 2010.

Ann Stock,

Assistant Secretary, Bureau of Educational and Cultural Affairs, Department of State.

[FR Doc. 2010–24989 Filed 10–1–10; 8:45 am]

BILLING CODE 4710–05–P

OFFICE OF THE UNITED STATES TRADE REPRESENTATIVE

Request for Public Comments on Annual Review of Country Eligibility for Benefits Under the African Growth and Opportunity Act

AGENCY: Office of the United States Trade Representative.

ACTION: Notice and request for Comments.

SUMMARY: The African Growth and Opportunity Act Implementation Subcommittee of the Trade Policy Staff Committee (the "Subcommittee") is requesting written public comments for the annual review of the eligibility of sub-Saharan African countries to receive the benefits of the African Growth and Opportunity Act (AGOA). The Subcommittee will consider these comments in developing recommendations on AGOA country eligibility for the President. Comments received related to the child labor criteria may also be considered by the Secretary of Labor for the preparation of the Department of Labor's report on child labor as required under section 412(c) of the Trade and Development Act of 2000. This notice identifies the eligibility criteria that must be considered under the AGOA, and lists those sub-Saharan African countries that are currently eligible for the benefits of the AGOA, and those that are currently ineligible for such benefits.

DATES: Public comments are due at the Office of the U.S. Trade Representative (USTR) by noon, Thursday, October 21, 2010.

ADDRESSES: USTR strongly prefers electronic submissions made at *http://www.regulations.gov,* docket number USTR–2010–0024. *See* "Requirements for Submission," below. If you are unable to make a submission at *http://www.regulations.gov,* please contact Gloria Blue, Executive Secretary, Trade Policy Staff Committee, at (202) 395–6143 to make other arrangements.

FOR FURTHER INFORMATION CONTACT: For procedural questions, please contact Gloria Blue, Office of the U.S. Trade Representative, 600 17th Street, NW., Room F516, Washington, DC 20508, at (202) 395–3475. All other questions should be directed to Constance Hamilton, Deputy Assistant U.S. Trade Representative for Africa, Office of the U.S. Trade Representative, at (202) 395–9514.

SUPPLEMENTARY INFORMATION: The AGOA (Title I of the Trade and Development Act of 2000, Pub. L. 106–200) (19 U.S.C. 3721 *et seq.*), as amended, authorizes the President to designate sub-Saharan African countries as beneficiary sub-Saharan African countries eligible for duty-free treatment for certain additional products under the Generalized System of Preferences (GSP) (Title V of the Trade Act of 1974 (19 U.S.C. 2461 *et seq.*) (the "1974 Act")), as well as for the preferential treatment the AGOA provides for certain textile and apparel articles.

The President may designate a country as a beneficiary sub-Saharan African country eligible for both the additional GSP benefits and the textile and apparel benefits of the AGOA for countries meeting certain statutory requirements intended to prevent unlawful transshipment of such articles, if he determines that the country meets the eligibility criteria set forth in: (1) Section 104 of the AGOA; and (2) section 502 of the 1974 Act. For 2010, 39 countries have been designated as beneficiary sub-Saharan African countries. These countries, as well as the 9 countries currently ineligible, are listed below. Section 506A of the 1974 Act provides that the President shall monitor and review annually the progress of each sub-Saharan African country in meeting the foregoing eligibility criteria in order to determine whether each beneficiary sub-Saharan African country should continue to be eligible, and whether each sub-Saharan African country that is currently not a beneficiary sub-Saharan African country, should be designated as such a country. Section 506A of the 1974 Act requires that, if the President determines that a beneficiary sub-Saharan African country is not making continual progress in meeting the eligibility requirements, he must terminate the designation of the country as a beneficiary sub-Saharan African country.

The Subcommittee is seeking public comments in connection with the annual review of the eligibility of beneficiary sub-Saharan African countries for the AGOA's benefits. The Subcommittee will consider any such comments in developing recommendations on country eligibility for the President. Comments related to the child labor criteria may also be considered by the Secretary of Labor in making the findings required under section 504 of the 1974 Act. The following sub-Saharan African countries were designated as beneficiary sub-Saharan African countries in 2010:Q P=≥02≥≤

Angola,
Republic of Benin,
Republic of Botswana,
Burkina Faso,
Burundi,
Republic of Cape Verde,
Republic of Cameroon,
Republic of Chad,
Federal Islamic Republic of Comoros,
Republic of Congo,
Democratic Republic of Congo,
Republic of Djibouti,
Ethiopia,
Gabonese Republic,
The Gambia,
Republic of Ghana,
Republic of Guinea-Bissau,
Republic of Kenya,
Kingdom of Lesotho,
Republic of Liberia,
Republic of Malawi,
Republic of Mali,
Islamic Republic of Mauritania,
Republic of Mauritius,
Republic of Mozambique,
Republic of Namibia,
Federal Republic of Nigeria,
Republic of Rwanda,
Sao Tome & Principe,
Republic of Senegal,
Republic of Seychelles,
Republic of Sierra Leone,
Republic of South Africa,
Kingdom of Swaziland,
United Republic of Tanzania,
Republic of Togo,
Republic of Uganda,
Republic of Zambia.

The following sub-Saharan African countries were not designated as beneficiary sub-Saharan African countries in 2010:

Central African Republic,
Republic of Cote d'Ivoire,

Republic of Guinea,
Republic of Equatorial Guinea,
State of Eritrea,
Republic of Madagascar,
Republic of Niger,
Somalia,
Republic of Sudan,
Republic of Zimbabwe.

Requirements for Submissions: Comments must be submitted in English. To ensure the most timely and expeditious receipt and consideration of petitions, USTR has arranged to accept on-line submissions via *http://www.regulations.gov.* To submit petitions via this site, enter docket number USTR–2010–0024 on the home page and click "search." The site will provide a search-results page listing all documents associated with this docket. Find a reference to this notice by selecting "notice" under "Document Type" on search-results page and click on the link entitled "Submit a Comment." (For further information on using the *http://www.regulations,gov* Web site, please consult the resources provided on the Web site by clicking on "Help" at the top of the home page.)

The *http://www.regulations.gov* Web site provides the option of making submissions by filling in a "Type comment & Upload file" field, or by attaching a document. USTR prefers comments to be submitted as attachments. When doing this, it is sufficient to type "See attached" in the "Type comment & Upload file" field. Submissions in Microsoft Word (.doc) or Adobe Acrobat (pdf) are preferred.

Persons wishing to file comments containing business confidential information must submit both a business confidential version and a public version. Persons submitting business confidential information should write "See attached BC comments" in the "Type comment & Upload file" field. Any page containing business confidential information must be clearly marked "BUSINESS CONFIDENTIAL" on the top of that page. Persons submitting a business confidential comment must also submit a separate public version of that comment with the business confidential information deleted. Persons should write "See attached public version" in the "Type comment & Upload file" field of the public submission. Submissions should not attach separate cover letters; rather, information that might appear in the cover letter should be included in the comments you submit. Similarly, to the extent possible, please include any exhibits, annexes, or other attachments to a submission in the same file as the submission itself and not as separate files.

Public versions of all documents relating to this review will be available for review no later than two weeks after the due date at *http://www.regulations.gov,* docket number USTR–2010–0024.

Carmen Suro-Bredie,

Chairman, Trade Policy Staff Committee.

[FR Doc. 2010–24781 Filed 10–1–10; 8:45 am]

BILLING CODE 3190–W0–P

DEPARTMENT OF THE TREASURY

Internal Revenue Service

[REG–139236–07 (TD 9467)]

Proposed Collection; Comment Request for Regulation Project

AGENCY: Internal Revenue Service (IRS), Treasury.

ACTION: Notice and request for comments.

SUMMARY: The Department of the Treasury, as part of its continuing effort to reduce paperwork and respondent burden, invites the general public and other Federal agencies to take this opportunity to comment on proposed and/or continuing information collections, as required by the Paperwork Reduction Act of 1995, Public Law 104–13 (44 U.S.C. 3506(c)(2)(A)). Currently, the IRS is soliciting comments concerning an existing Final Regulation, REG–139236–07 (TD 9467), Measurement of Assets and Liabilities for Pension Funding Purposes.

DATES: Written comments should be received on or before December 3, 2010 to be assured of consideration.

ADDRESSES: Direct all written comments to Gerald Shields, Internal Revenue Service, Room 6129, 1111 Constitution Avenue, NW., Washington, DC 20224.

FOR FURTHER INFORMATION CONTACT: Requests for additional information or copies of the regulations should be directed to Joel Goldberger at Internal Revenue Service, Room 6129, 1111 Constitution Avenue, NW., Washington, DC 20224, or at (202) 927–9368, or through the Internet at *Joel.P.Goldberger@irs.gov.*

SUPPLEMENTARY INFORMATION:

Title: Measurement of Assets and Liabilities for Pension Funding Purposes.

OMB Number: 1545–2095.

Regulation Project Number: REG–139236–07 (TD 9467).

Abstract: (These final regulations were issued in two separate NPRMs, which received separate OMB control numbers of 1545–2095 and 1545–2112. The NPRMs have been combined into a single set of final regulations and the IRS is changing the Information Collection Request (ICR) under OMB control number 1545–2095 and abandoning the ICR under OMB control number 1545–2112. The collections that were under 1545–2112 are being added to 1545–2095.)

In order to implement the statutory provisions under sections 430 and 436, this final regulation contains collections of information in §§ 1.430(f)–1(f), 1.430(h)(2)–1(e), 1.436–1(f), and 1.436–1(h). The information required under § 1.430(f)–1(f) is required in order for plan sponsors to make elections regarding a plan's credit balances upon occasion. The information under § 1.430(g)–1(d)(3) is required in order for a plan sponsor to include as a plan asset a contribution made to avoid a restriction under section 436. The information required under § 1.430(h)(2)–1(e) is required in order for a plan sponsor to make an election to use an alternative interest rate for purposes of determining a plan's funding obligations under § 1.430(h)(2)–1. The information required under §§ 1.436–1(f) and 1.436–1(h) is required in order for a qualified defined benefit plan's enrolled actuary to provide a timely certification of the plan's adjusted funding target attainment percentage (AFTAP) for each plan year to avoid certain benefit restrictions.

Current Actions: There is no change to this existing regulation.

Type of Review: Revision of a currently approved collection.

Affected Public: Individuals, business or other for-profit organizations, not-for-profit institutions and Federal, state, local or tribal governments.

Estimated Number of Respondents: 80,000.

Estimated Time per Respondent: 1.5 hrs.

Estimated Total Annual Burden Hours: 120,000.

The following paragraph applies to all of the collections of information covered by this notice:

An agency may not conduct or sponsor, and a person is not required to respond to, a collection of information unless the collection of information displays a valid OMB control number. Books or records relating to a collection of information must be retained as long as their contents may become material in the administration of any internal revenue law. Generally, tax returns and tax return information are confidential, as required by 26 U.S.C. 6103.

Request for Comments: Comments submitted in response to this notice will

be summarized and/or included in the request for OMB approval. All comments will become a matter of public record. Comments are invited on: (a) Whether the collection of information is necessary for the proper performance of the functions of the agency, including whether the information shall have practical utility; (b) the accuracy of the agency's estimate of the burden of the collection of information; (c) ways to enhance the quality, utility, and clarity of the information to be collected; (d) ways to minimize the burden of the collection of information on respondents, including through the use of automated collection techniques or other forms of information technology; and (e) estimates of capital or start-up costs and costs of operation, maintenance, and purchase of services to provide information.

Approved: September 15, 2010.

Gerald Shields,

IRS Supervisory Tax Analyst.

[FR Doc. 2010–24761 Filed 10–1–10; 8:45 am]

BILLING CODE 4830–01–P

DEPARTMENT OF THE TREASURY

Internal Revenue Service

[REG–157711–02]

Proposed Collection: Comment Request for Regulation Project

AGENCY: Internal Revenue Service (IRS), Treasury.

ACTION: Notice and request for comments.

SUMMARY: The Department of the Treasury, as part of its continuing effort to reduce paperwork and respondent burden, invites the general public and other Federal agencies to take this opportunity to comment on proposed and/or continuing information collections, as required by the Paperwork Reduction Act of 1995, Public Law 104–13 (44 U.S.C. 3506(c)(2)(A)). Currently, the IRS is soliciting comments concerning an existing notice of proposed rulemaking, REG–157711–02 (TD 9424—final), Unified Rule for Loss on Subsidiary Stock.

DATES: Written comments should be received on or before December 3, 2010 to be assured of consideration.

ADDRESSES: Direct all written comments to Gerald J. Shields, Internal Revenue Service, room 6129, 1111 Constitution Avenue, NW., Washington, DC 20224.

FOR FURTHER INFORMATION CONTACT: Requests for additional information or copies of the regulation should be directed to R. Joseph Durbala, at (202) 622–3634, or at Internal Revenue Service, room 6129, 1111 Constitution Avenue, NW., Washington, DC 20224, or through the Internet, at *RJoseph.Durbala@irs.gov.*

SUPPLEMENTARY INFORMATION:

Title: Unified Rule for Loss on Subsidiary Stock.

OMB Number: 1545–2096.

Regulation Project Number: REG–157711–02 (TD 9424—final).

Abstract: This document contains final regulations under sections 358, 362(e)(2), and 1502 of the Internal Revenue Code (Code). The regulations apply to corporations filing consolidated returns, and corporations that enter into certain tax-free reorganizations. The regulations provide rules for determining the tax consequences of a member's transfer (including by deconsolidation and worthlessness) of loss shares of subsidiary stock. In addition, the regulations provide that section 362(e)(2) generally does not apply to transactions between members of a consolidated group. Finally, the regulations conform or clarify various provisions of the consolidated return regulations, including those relating to adjustments to subsidiary stock basis.

Current Actions: There is no change to this existing regulation.

Type of Review: Extension of a currently approved collection.

Affected Public: Business or other for-profit organizations.

Estimated Number of Respondents: 100.

Estimated Time per Respondent: 15 minutes.

Estimated Total Annual Burden Hours: 25.

The following paragraph applies to all of the collections of information covered by this notice.

An agency may not conduct or sponsor, and a person is not required to respond to, a collection of information unless the collection of information displays a valid OMB control number. Books or records relating to a collection of information must be retained as long as their contents may become material in the administration of any internal revenue law. Generally, tax returns and tax return information are confidential, as required by 26 U.S.C. 6103.

Request for Comments: Comments submitted in response to this notice will be summarized and/or included in the request for OMB approval. All comments will become a matter of public record. Comments are invited on: (a) Whether the collection of information is necessary for the proper performance of the functions of the agency, including whether the information shall have practical utility; (b) the accuracy of the agency's estimate of the burden of the collection of information; (c) ways to enhance the quality, utility, and clarity of the information to be collected; (d) ways to minimize the burden of the collection of information on respondents, including through the use of automated collection techniques or other forms of information technology; and (e) estimates of capital or start-up costs and costs of operation, maintenance, and purchase of services to provide information.

Approved: September 28, 2010.

R. Joseph Durbala,

IRS Tax Analyst.

[FR Doc. 2010–24756 Filed 10–1–10; 8:45 am]

BILLING CODE 4830–01–P

DEPARTMENT OF THE TREASURY

Internal Revenue Service

Proposed Collection; Comment Request for Form 8838

AGENCY: Internal Revenue Service (IRS), Treasury.

ACTION: Notice and request for comments.

SUMMARY: The Department of the Treasury, as part of its continuing effort to reduce paperwork and respondent burden, invites the general public and other Federal agencies to take this opportunity to comment on proposed and/or continuing information collections, as required by the Paperwork Reduction Act of 1995, Public Law 104–13 (44 U.S.C. 3506(c)(2)(A)). Currently, the IRS is soliciting comments concerning Form 8838, Consent To Extend the Time To Assess Tax Under Section 367—Gain Recognition Agreement.

DATES: Written comments should be received on or before December 3, 2010 to be assured of consideration.

ADDRESSES: Direct all written comments to Gerald J. Shields, Internal Revenue Service, room 6129, 1111 Constitution Avenue, NW., Washington, DC 20224.

FOR FURTHER INFORMATION CONTACT: Requests for copies of the form and instructions should be directed to R. Joseph Durbala at Internal Revenue Service, room 6129, 1111 Constitution Avenue, NW., Washington, DC 20224, or at (202) 622–3634, or through the Internet at *RJoseph.Durbala@irs.gov.*

SUPPLEMENTARY INFORMATION:

Title: Consent To Extend the Time To Assess Tax Under Section 367—Gain Recognition Agreement.

OMB Number: 1545–1395.

Form Number: 8838.

Abstract: Form 8838 is used to extend the statute of limitations for U.S. persons who transfer stock or securities to a foreign corporation. The form is filed when the transferor makes a gain recognition agreement. This agreement allows the transferor to defer the payment of tax on the transfer. The IRS uses Form 8838 so that it may assess tax against the transferor after the expiration of the original statute of limitations.

Current Actions: There are no changes being made to the Form 8838 at this time.

Type of Review: Extension of a current approval.

Affected Public: Business or other for-profit organizations and individuals.

Estimated Number of Respondents: 666.

Estimated Time per Respondent: 8 hrs., 14 min.

Estimated Total Annual Burden Hours: 5,482.

The following paragraph applies to all of the collections of information covered by this notice:

An agency may not conduct or sponsor, and a person is not required to respond to, a collection of information unless the collection of information displays a valid OMB control number. Books or records relating to a collection of information must be retained as long as their contents may become material in the administration of any internal revenue law. Generally, tax returns and tax return information are confidential, as required by 26 U.S.C. 6103.

Request for Comments: Comments submitted in response to this notice will be summarized and/or included in the request for OMB approval. All comments will become a matter of public record. Comments are invited on: (a) Whether the collection of information is necessary for the proper performance of the functions of the agency, including whether the information shall have practical utility; (b) the accuracy of the agency's estimate of the burden of the collection of information; (c) ways to enhance the quality, utility, and clarity of the information to be collected; (d) ways to minimize the burden of the collection of information on respondents, including through the use of automated collection techniques or other forms of information technology; and (e) estimates of capital or start-up costs and costs of operation, maintenance, and purchase of services to provide information.

Approved: September 28, 2010.

R. Joseph Durbala,

IRS Tax Analyst.

[FR Doc. 2010–24755 Filed 10–1–10; 8:45 am]

BILLING CODE 4830–01–P

DEPARTMENT OF THE TREASURY

Internal Revenue Service

[PS–106–91] (TD 8563)

Proposed Collection: Comment Request for Regulation Project

AGENCY: Internal Revenue Service (IRS), Treasury.

ACTION: Notice and request for comments.

SUMMARY: The Department of the Treasury, as part of its continuing effort to reduce paperwork and respondent burden, invites the general public and other Federal agencies to take this opportunity to comment on proposed and/or continuing information collections, as required by the Paperwork Reduction Act of 1995, Public Law 104–13 (44 U.S.C. 3506(c)(2)(A)). Currently, the IRS is soliciting comments concerning an existing final regulation, PS–106–91 (TD 8563), State Housing Credit Ceiling and Other Rules Relating to the Low-Income Housing Credit (§ 1.42–14).

DATES: Written comments should be received on or before December 3, 2010 to be assured of consideration.

ADDRESSES: Direct all written comments to Gerald Shields, Internal Revenue Service, Room 6129, 1111 Constitution Avenue, NW, Washington, DC 20224.

FOR FURTHER INFORMATION CONTACT: Requests for additional information or copies of the regulation should be directed to Joel Goldberger, at (202) 927–9368, or at Internal Revenue Service, Room 6129, 1111 Constitution Avenue, NW., Washington, DC 20224, or through the Internet, at *Joel.P.Goldberger@irs.gov.*

SUPPLEMENTARY INFORMATION:

Title: State Housing Credit Ceiling and Other Rules Relating to the Low-Income Housing Credit.

OMB Number: 1545–1423.

Regulation Project Number: PS–106–91 (TD 8563)

Abstract: The regulation concerns the low-income housing credit under section 42 of the Internal Revenue Code. The regulation provides rules relating to the order in which housing credit dollar amounts are allocated from each State's housing credit ceiling under section 42(h)(3)(C) and the determination of which States qualify to receive credit from a national pool of credit under section 42(h)(3)(D). The regulation affects State and local housing credit agencies and taxpayers receiving credit allocations, and provides them with guidance for complying with section 42.

Current Actions: There is no change to this existing regulation.

Type of Review: Extension of a currently approved collection.

Affected Public: Business or other for-profit organizations, not-for-profit institutions, individuals or households, and state, local or tribal governments.

Estimated Number of Respondents: 110.

Estimated Time per Respondent: 2 hours, 30 minutes.

Estimated Total Annual Burden Hours: 275.

The following paragraph applies to all of the collections of information covered by this notice:

An agency may not conduct or sponsor, and a person is not required to respond to, a collection of information unless the collection of information displays a valid OMB control number. Books or records relating to a collection of information must be retained as long as their contents may become material in the administration of any internal revenue law. Generally, tax returns and tax return information are confidential, as required by 26 U.S.C. 6103.

Request for Comments: Comments submitted in response to this notice will be summarized and/or included in the request for OMB approval. All comments will become a matter of public record. Comments are invited on: (a) Whether the collection of information is necessary for the proper performance of the functions of the agency, including whether the information shall have practical utility; (b) the accuracy of the agency's estimate of the burden of the collection of information; (c) ways to enhance the quality, utility, and clarity of the information to be collected; (d) ways to minimize the burden of the collection of information on respondents, including through the use of automated collection techniques or other forms of information technology; and (e) estimates of capital or start-up costs and costs of operation, maintenance, and purchase of services to provide information.

Approved: September 15, 2010.

Gerald Shields,

IRS Supervisory Tax Analyst.

[FR Doc. 2010–24762 Filed 10–1–10; 8:45 am]

BILLING CODE 4830–01–P

DEPARTMENT OF THE TREASURY

Internal Revenue Service

[REG–209626–93] (TD 8796)

Proposed Collection; Comment Request for Regulation Project

AGENCY: Internal Revenue Service (IRS), Treasury.

ACTION: Notice and request for comments.

SUMMARY: The Department of the Treasury, as part of its continuing effort to reduce paperwork and respondent burden, invites the general public and other Federal agencies to take this opportunity to comment on proposed and/or continuing information collections, as required by the Paperwork Reduction Act of 1995, Public Law 104–13 (44 U.S.C. 3506(c)(2)(A)). Currently, the IRS is soliciting comments concerning an existing Final Regulation, REG–209626–93 (TD 8796), Notice, Consent, and Election Requirements Under Sections 411(a)(11) and 417 (§§ 1.411(a)–11T and 1.417(e)–1T).

DATES: Written comments should be received on or before December 3, 2010 to be assured of consideration.

ADDRESSES: Direct all written comments to Gerald Shields, Internal Revenue Service, room 6129, 1111 Constitution Avenue, NW., Washington, DC 20224.

FOR FURTHER INFORMATION CONTACT: Requests for additional information or copies of the regulations should be directed to Joel Goldberger at Internal Revenue Service, room 6129, 1111 Constitution Avenue, NW., Washington, DC 20224, or at (202) 927–9368, or through the Internet at *Joel.P.Goldberger@irs.gov.*

SUPPLEMENTARY INFORMATION:

Title: Notice, Consent, and Election Requirements Under Sections 411(a)(11) and 417.

OMB Number: 1545–1471.

Regulation Project Number: REG–209626–93 (TD 8796).

Abstract: These regulations provide guidance concerning the notice consent requirements under Code section 411(a)(11) and the notice and election requirements of Code section 417, Regulation section 1.411(a)–11(c) provides that a participant's consent to a distribution under code section 411(a)(11) is not valid unless the participant receives a notice of his or her rights under the plan no more than 90 and no less than 30 days prior to the annuity starting date. Regulation section 1.417(e)–1 sets forth the same 90/30-day time period for providing the notice explaining the qualified joint and survivor annuity and waiver rights under Code section 417(a)(3).

Current Actions: There is no change to this existing regulation.

Type of Review: Extension of a currently approved collection.

Affected Public: Individuals, business or other for-profit organizations, not-for-profit institutions and Federal, state, local or tribal governments.

Estimated Number of Respondents: 750.000.

Estimated Time per Respondent: .011 hr.

Estimated Total Annual Burden Hours: 8,333.

The following paragraph applies to all of the collections of information covered by this notice:

An agency may not conduct or sponsor, and a person is not required to respond to, a collection of information unless the collection of information displays a valid OMB control number. Books or records relating to a collection of information must be retained as long as their contents may become material in the administration of any internal revenue law. Generally, tax returns and tax return information are confidential, as required by 26 U.S.C. 6103.

Request For Comments: Comments submitted in response to this notice will be summarized and/or included in the request for OMB approval. All comments will become a matter of public record. Comments are invited on: (a) Whether the collection of information is necessary for the proper performance of the functions of the agency, including whether the information shall have practical utility; (b) the accuracy of the agency's estimate of the burden of the collection of information; (c) ways to enhance the quality, utility, and clarity of the information to be collected; (d) ways to minimize the burden of the collection of information on respondents, including through the use of automated collection techniques or other forms of information technology; and (e) estimates of capital or start-up costs and costs of operation, maintenance, and purchase of services to provide information.

Approved: September 15, 2010.

Gerald Shields,

IRS Supervisory Tax Analyst.

[FR Doc. 2010–24760 Filed 10–1–10; 8:45 am]

BILLING CODE 4830–01–P

DEPARTMENT OF THE TREASURY

Internal Revenue Service

Proposed Collection; Comment Request for Form 5307

AGENCY: Internal Revenue Service (IRS), Treasury.

ACTION: Notice and request for comments.

SUMMARY: The Department of the Treasury, as part of its continuing effort to reduce paperwork and respondent burden, invites the general public and other Federal agencies to take this opportunity to comment on proposed and/or continuing information collections, as required by the Paperwork Reduction Act of 1995, Public Law 104–13 (44 U.S.C. 3506(c)(2)(A)). Currently, the IRS is soliciting comments concerning Form 5307, Application for Determination for Adopters of Master or Prototype or Volume Submitter Plans.

DATES: Written comments should be received on or before December 3, 2010 to be assured of consideration.

ADDRESSES: Direct all written comments to Gerald Shields, Internal Revenue Service, Room 6129, 1111 Constitution Avenue, NW., Washington, DC 20224.

FOR FURTHER INFORMATION CONTACT: Requests for copies of the form and instructions should be directed to Joel Goldberger, at (202) 927–9368, Internal Revenue Service, Room 6129, 1111 Constitution Avenue, NW., Washington, DC 20224, or through the Internet at *Joel.P.Goldberger@irs.gov.*

SUPPLEMENTARY INFORMATION:

Title: Application for Determination for Adopters of Master or Prototype or Volume Submitter Plans.

OMB Number: 1545–0200.

Form Number: 5307.

Abstract: Employers whose pension plans meet the requirements of Internal Revenue Code section 401(a) are permitted a deduction for their contributions to these plans. To have a plan qualified under Code section 401(a), the employer must submit an application to the IRS as required by regulation § 1.401–1(b)(2). Form 5307 is used as an application for this purpose by adopters of master or prototype or volume submitter plans.

Current Actions: There are no changes being made to the form at this time.

Type of Review: Extension of a currently approved collection.

Affected Public: Business or other for-profit organizations.

Estimated Number of Respondents: 100,000.

Estimated Time per Respondent: 51 hours, 9 minutes.

Estimated Total Annual Burden Hours: 5,115,000.

The following paragraph applies to all of the collections of information covered by this notice:

An agency may not conduct or sponsor, and a person is not required to respond to, a collection of information unless the collection of information displays a valid OMB control number.

Books or records relating to a collection of information must be retained as long as their contents may become material in the administration of any internal revenue law. Generally, tax returns and tax return information are confidential, as required by 26 U.S.C. 6103.

Request for Comments: Comments submitted in response to this notice will be summarized and/or included in the request for OMB approval. All comments will become a matter of public record. Comments are invited on: (a) Whether the collection of information is necessary for the proper performance of the functions of the agency, including whether the information shall have practical utility; (b) the accuracy of the agency's estimate of the burden of the collection of information; (c) ways to enhance the quality, utility, and clarity of the information to be collected; (d) ways to minimize the burden of the collection of information on respondents, including through the use of automated collection techniques or other forms of information technology; and (e) estimates of capital or start-up costs and costs of operation, maintenance, and purchase of services to provide information.

Approved: September 16, 2010.

Gerald Shields,

IRS Supervisory Tax Analyst.

[FR Doc. 2010–24759 Filed 10–1–10; 8:45 am]

BILLING CODE 4830–01–P

DEPARTMENT OF THE TREASURY

Internal Revenue Service

[INTL–9–95]

Proposed Collection; Comment Request for Regulation Project

AGENCY: Internal Revenue Service (IRS), Treasury.

ACTION: Notice and request for comments.

SUMMARY: The Department of the Treasury, as part of its continuing effort to reduce paperwork and respondent burden, invites the general public and other Federal agencies to take this opportunity to comment on proposed and/or continuing information collections, as required by the Paperwork Reduction Act of 1995, Public Law 104–13 (44 U.S.C. 3506(c)(2)(A)). Currently, the IRS is soliciting comments concerning an existing final regulation, INTL–9–95 (TD 8702), Certain Transfers of Domestic Stock or Securities by U.S. Persons to Foreign Corporations (§ 1.367(a)–3).

DATES: Written comments should be received on or before December 3, 2010 to be assured of consideration.

ADDRESSES: Direct all written comments to Gerald J. Shields, Internal Revenue Service, room 6129, 1111 Constitution Avenue, NW., Washington, DC 20224.

FOR FURTHER INFORMATION CONTACT: Requests for additional information or copies of the regulations should be directed to R. Joseph Durbala at Internal Revenue Service, Room 6129, 1111 Constitution Avenue, NW., Washington, DC 20224, or at (202) 622–3634, or through the Internet at *RJoseph.Durbala@irs.gov*.

SUPPLEMENTARY INFORMATION:

Title: Certain Transfers of Domestic Stock or Securities by U.S. Persons to Foreign Corporations.

OMB Number: 1545–1478.

Regulation Project Number: INTL–9–95 (TD 8702).

Abstract: This regulation relates to certain transfers of stock or securities of domestic corporations pursuant to the corporate organization, reorganization, or liquidation provisions of the internal Revenue Code. Transfers of stock or securities by U.S. persons in tax-free transactions are treated as taxable transactions when the acquirer is a foreign corporation, unless an exception applies under Code section 367(a). This regulation provides that no U.S. person will qualify for an exception unless the U.S. target company complies with certain reporting requirements.

Current Actions: There is no change to this existing regulation.

Type of Review: Extension of a currently approved collection.

Affected Public: Business or other for-profit organizations.

Estimated Number of Responses: 100.

Estimated Time Per Response: 10 hours.

Estimated Total Annual Burden Hours: 1,000.

The following paragraph applies to all of the collections of information covered by this notice:

An agency may not conduct or sponsor, and a person is not required to respond to, a collection of information unless the collection of information displays a valid OMB control number. Books or records relating to a collection of information must be retained as long as their contents may become material in the administration of any internal revenue law. Generally, tax returns and tax return information are confidential, as required by 26 U.S.C. 6103.

Request for Comments: Comments submitted in response to this notice will be summarized and/or included in the request for OMB approval. All comments will become a matter of public record. Comments are invited on: (a) Whether the collection of information is necessary for the proper performance of the functions of the agency, including whether the information shall have practical utility; (b) the accuracy of the agency's estimate of the burden of the collection of information; (c) ways to enhance the quality, utility, and clarity of the information to be collected; (d) ways to minimize the burden of the collection of information on respondents, including through the use of automated collection techniques or other forms of information technology; and (e) estimates of capital or start-up costs and costs of operation, maintenance, and purchase of services to provide information.

Approved: September 28, 2010.

R. Joseph Durbala,

IRS Tax Analyst.

[FR Doc. 2010–24758 Filed 10–1–10; 8:45 am]

BILLING CODE 4830–01–P

DEPARTMENT OF THE TREASURY

Internal Revenue Service

Proposed Collection; Comment Request for Form 8038–R

AGENCY: Internal Revenue Service (IRS), Treasury.

ACTION: Notice and request for comments.

SUMMARY: The Department of the Treasury, as part of its continuing effort to reduce paperwork and respondent burden, invites the general public and other Federal agencies to take this opportunity to comment on proposed and/or continuing information collections, as required by the Paperwork Reduction Act of 1995, Public Law 104–13 (44 U.S.C. 3506(c)(2)(A)). Currently, the IRS is soliciting comments concerning Form 8038–R, Request for Recovery of Overpayments Under Arbitrage Rebate Provisions.

DATES: Written comments should be received on or before December 3, 2010 to be assured of consideration.

ADDRESSES: Direct all written comments to Gerald J. Shields, Internal Revenue Service, room 6129, 1111 Constitution Avenue NW., Washington, DC 20224.

FOR FURTHER INFORMATION CONTACT: Requests for additional information or copies of the form and instructions should be directed to R. Joseph Durbala at Internal Revenue Service, room 6129, 1111 Constitution Avenue NW., Washington, DC 20224, or at (202) 622–3634, or through the internet at *RJoseph.Durbala@irs.gov.*

SUPPLEMENTARY INFORMATION:

Title: Request for Recovery of Overpayments Under Arbitrage Rebate Provisions.

OMB Number: 1545–1750.

Form Number: 8038–R.

Abstract: Under Treasury Regulations section 1.148–3(i), bond issuers may recover an overpayment of arbitrage rebate paid to the United States under Internal Revenue Code section 148. Form 8038–R is used to request recovery of any overpayment of arbitrage rebate made under the arbitrage rebate provisions.

Current Actions: There are no changes being made to the form at this time.

Type of Review: Extension of a currently approved collection.

Affected Public: State, local or tribal governments.

Estimated Number of Respondents: 200.

Estimated Time per Respondent: 12 hours, 16 minutes.

Estimated Total Annual Burden Hours: 2,458.

The following paragraph applies to all of the collections of information covered by this notice:

An agency may not conduct or sponsor, and a person is not required to respond to, a collection of information unless the collection of information displays a valid OMB control number. Books or records relating to a collection of information must be retained as long as their contents may become material in the administration of any internal revenue law. Generally, tax returns and tax return information are confidential, as required by 26 U.S.C. 6103.

Request for comments: Comments submitted in response to this notice will be summarized and/or included in the request for OMB approval. All comments will become a matter of public record.

Comments are invited on: (a) Whether the collection of information is necessary for the proper performance of the functions of the agency, including whether the information shall have practical utility; (b) the accuracy of the agency's estimate of the burden of the collection of information; (c) ways to enhance the quality, utility, and clarity of the information to be collected; (d) ways to minimize the burden of the collection of information on respondents, including through the use of automated collection techniques or other forms of information technology; and (e) estimates of capital or start-up costs and costs of operation, maintenance, and purchase of services to provide information.

Approved: September 28, 2010.

R. Joseph Durbala,

IRS Tax Analyst.

[FR Doc. 2010–24757 Filed 10–1–10; 8:45 am]

BILLING CODE 4830–01–P

DEPARTMENT OF THE TREASURY

Internal Revenue Service

Proposed Collection; Comment Request for the EFTPS Primary Contact Information Change Form

AGENCY: Internal Revenue Service (IRS), Treasury.

ACTION: Notice and request for comments.

SUMMARY: The Department of the Treasury, as part of its continuing effort to reduce paperwork and respondent burden, invites the general public and other Federal agencies to take this opportunity to comment on proposed and/or continuing information collections, as required by the Paperwork Reduction Act of 1995, Public Law 104–13 (44 U.S.C. 3506(c)(2)(A)). Currently, the IRS is soliciting comments concerning the EFTPS Primary Contact Information Change Form.

DATES: Written comments should be received on or before December 3, 2010 to be assured of consideration.

ADDRESSES: Direct all written comments to Gerald J. Shields, Internal Revenue Service, room 6129, 1111 Constitution Avenue, NW., Washington, DC 20224.

FOR FURTHER INFORMATION CONTACT: Requests for additional information or copies of the form and instructions should be directed to R. Joseph Durbala, (202) 622–3634, at Internal Revenue Service, room 6129, 1111 Constitution Avenue, NW., Washington, DC 20224, or through the Internet at *RJoseph.Durbala@irs.gov.*

SUPPLEMENTARY INFORMATION: *Title:* EFTPS Primary Contact Information Change Form.

OMB Number: 1545–2100.

Form Number: N/A.

Abstract: EFTPS is a service offered free by the U.S. Department of the Treasury to help business and individual taxpayers conveniently pay all their federal taxes electronically. Currently taxpayers can only obtain the Primary Contact Information Form by calling EFTPS Customer Service. The taxpayer calls EFTPS Customer Service requesting to change the contact information on their enrollment. As an alternative to faxing, we are offering the taxpayer the option of downloading the form.

Current Actions: There is no change in the paperwork burden previously approved by OMB. This form is being submitted for renewal purposes only.

Type of Review: Extension of a currently approved collection.

Affected Public: Individuals and Households.

Estimated Number of Respondents: 12,000.

Estimated Time Per Respondent: 9 minutes.

Estimated Total Annual Burden Hours: 200.

The following paragraph applies to all of the collections of information covered by this notice:

An agency may not conduct or sponsor, and a person is not required to respond to, a collection of information unless the collection of information displays a valid OMB control number. Books or records relating to a collection of information must be retained as long as their contents may become material in the administration of any internal revenue law. Generally, tax returns and tax return information are confidential, as required by 26 U.S.C. 6103.

Request For Comments: Comments submitted in response to this notice will be summarized and/or included in the request for OMB approval. All comments will become a matter of public record. Comments are invited on: (a) Whether the collection of information is necessary for the proper performance of the functions of the agency, including whether the information shall have practical utility; (b) the accuracy of the agency's estimate of the burden of the collection of information; (c) ways to enhance the quality, utility, and clarity of the information to be collected; (d) ways to minimize the burden of the collection of information on respondents, including through the use of automated collection techniques or other forms of information technology; and (e) estimates of capital or start-up costs and costs of operation, maintenance, and purchase of services to provide information.

Approved: September 28, 2010.

R. Joseph Durbala,

IRS Tax Analyst.

[FR Doc. 2010–24754 Filed 10–1–10; 8:45 am]

BILLING CODE 4830–01–P

DEPARTMENT OF THE TREASURY

Office of Thrift Supervision

[AC–51: OTS No. H–4729]

Kaiser Federal Financial Group, Inc., Covina, CA; Approval of Conversion Application

Notice is hereby given that on September 28, 2010, the Office of Thrift Supervision approved the application of K-Fed Mutual Holding Company and Kaiser Federal Bank, Covina, California, to convert to the stock form of organization. Copies of the application are available for inspection by appointment (phone number: 202–906–5922 or e-mail *Public.Info@OTS.Treas.gov*) at the Public Reading Room, 1700 G Street, NW., Washington, DC 20552, and the OTS Western Regional Office, 122 W. John Carpenter Freeway, Suite 600, Irving, Texas 75261–9027.

Dated: September 28, 2010.

By the Office of Thrift Supervision.

Sandra E. Evans,

Federal Register Liaison.

[FR Doc. 2010–24772 Filed 10–1–10; 8:45 am]

BILLING CODE 6720–01–M

DEPARTMENT OF THE TREASURY

Office of Foreign Assets Control

Additional Identifying Information Associated With Persons Whose Property and Interests in Property Are Blocked Pursuant to Executive Order 13551 of August 30, 2010, "Blocking Property of Certain Persons With Respect to North Korea"

AGENCY: Office of Foreign Assets Control, Treasury.

ACTION: Notice.

SUMMARY: The Treasury Department's Office of Foreign Assets Control ("OFAC") is publishing additional identifying information associated with the one individual and three entities listed in the Annex to Executive Order 13551 of August 30, 2010, "Blocking Property of Certain Persons With Respect to North Korea," whose property and interests in property are therefore blocked.

FOR FURTHER INFORMATION CONTACT: Assistant Director, Compliance Outreach & Implementation, Office of Foreign Assets Control, Department of the Treasury, 1500 Pennsylvania Avenue, NW. (Treasury Annex), Washington, DC 20220, Tel.: 202/622–2490.

SUPPLEMENTARY INFORMATION:

Electronic and Facsimile Availability

This document and additional information concerning OFAC are available from OFAC's Web site (*http://www.treas.gov/ofac*) or via facsimile through a 24-hour fax-on-demand service, Tel.: 202/622–0077.

Background

On August 30, 2010, the President issued Executive Order 13551 "Blocking Property of Certain Persons With Respect to North Korea" (the "Order") pursuant to, *inter alia,* the International Emergency Economic Powers Act (50 U.S.C. 1701–06). In the Order, the President expanded the scope of the national emergency declared in Executive Order 13466 of June 26, 2008, and took additional steps with respect to the situation in North Korea.

Section 1 of the Order blocks, with certain exceptions, all property and interests in property that are in the United States, that come within the United States, or that are or come within the possession or control of any United States person, of persons listed in the Annex to the Order and of persons determined by the Secretary of the Treasury, in consultation with the Secretary of State, to satisfy certain criteria set forth in the Order.

The Annex to the Order lists one individual and three entities whose property and interests in property are blocked pursuant to the Order. OFAC is publishing additional identifying information associated with that individual and those entities.

The listings for the individual and entities now appear as follows:

Individual

1. KIM, Yong Chol (a.k.a. KIM, Yong-Chol; a.k.a. KIM, Young-Cheol; a.k.a. KIM, Young-Chol; a.k.a. KIM, Young-Chul); DOB circa 1947; alt. DOB circa 1946; POB Pyongan-Pukto, North Korea (individual) [DPRK].

Entities

GREEN PINE ASSOCIATED CORPORATION (a.k.a. CHONGSONG YONHAP; a.k.a. CH'O'NGSONG YO'NHAP), Nungrado, Pyongyang, Korea, North; c/o Reconnaissance General Bureau Headquarters, Hyongjesan-Guyok, Pyongyang, Korea, North [DPRK].

1. OFFICE 39 (a.k.a. BUREAU 39; a.k.a. CENTRAL COMMITTEE BUREAU 39; a.k.a. DIVISION 39; a.k.a. OFFICE #39; a.k.a. OFFICE NO. 39; a.k.a. THIRD FLOOR), Second KWP Government Building (Korean—Ch'o'ngsa), Chungso'ng, Urban Town (Korean—Dong), Chung Ward, Pyongyang, Korea, North; Chung-Guyok (Central District), Sosong Street, Kyongrim-Dong, Pyongyang, Korea, North; Changgwang Street, Pyongyang, Korea, North [DPRK].

2. RECONNAISSANCE GENERAL BUREAU (a.k.a. CHONGCH'AL CH'ONGGUK; a.k.a. KPA UNIT 586; a.k.a. "RGB"), Hyongjesan-Guyok, Pyongyang, Korea, North; Nungrado, Pyongyang, Korea, North [DPRK].

Dated: September 27, 2010.

Adam J. Szubin,

Director, Office of Foreign Assets Control.

[FR Doc. 2010–24816 Filed 10–1–10; 8:45 am]

BILLING CODE 4811–42–P

DEPARTMENT OF THE TREASURY

Fiscal Service

Surety Companies Acceptable on Federal Bonds: Darwin National Assurance Company

AGENCY: Financial Management Service, Fiscal Service, Department of the Treasury.

ACTION: Notice.

SUMMARY: This is Supplement No. 4 to the Treasury Department Circular 570, 2010 Revision, published July 1, 2010, at 75 FR 38192.

FOR FURTHER INFORMATION CONTACT: Surety Bond Branch at (202) 874–6850.

SUPPLEMENTARY INFORMATION: A Certificate of Authority as an acceptable surety on Federal bonds is hereby issued under 31 U.S.C. 9305 to the following company: Darwin National Assurance Company (NAIC # 16624). *Business Address:* 9 Farm Springs Road, Farmington, CT 06032. *Phone:* (860) 284–1300. Underwriting Limitation b/: $28,329,000. Surety Licenses c/: AL, AK, AZ, GO, DE, DC, FL, GA, HI, ID, IL, IN, IA, KS, KY, LA, MD, MA, MI, MN, MS, MO, MT, NE, NV, NH, NJ, NM, NY, NC, ND, OH, OK, OR, PA, RI, SC, SD, TN, TX, UT, VT, VA, WA, WV, WI, WY. INCORPORATED IN: Delaware.

Federal bond-approving officers should annotate their reference copies of the Treasury Circular 570 ("Circular"), 2010 Revision, to reflect this addition.

Certificates of Authority expire on June 30th each year, unless revoked prior to that date. The Certificates are subject to subsequent annual renewal as long as the companies remain qualified

(see 31 CFR part 223). A list of qualified companies is published annually as of July 1st in the Circular, which outlines details as to the underwriting limitations, areas in which companies are licensed to transact surety business, and other information.

The Circular may be viewed and downloaded through the Internet at *http://www.fms.treas.gov/c570.*

Questions concerning this Notice may be directed to the U.S. Department of the Treasury, Financial Management Service, Financial Accounting and Services Division, Surety Bond Branch, 3700 East-West Highway, Room 6F01, Hyattsville, MD 20782.

Dated: September 20, 2010.

Laura Carrico,

Director, Financial Accounting and Services Division,

[FR Doc. 2010–24632 Filed 10–1–10; 8:45 am]

BILLING CODE 4810–35–M

DEPARTMENT OF VETERANS AFFAIRS

[OMB Control No. 2900–0043]

Proposed Information Collection (Declaration of Status of Dependents); Activity: Comment Request

AGENCY: Veterans Benefits Administration, Department of Veterans Affairs.

ACTION: Notice.

SUMMARY: The Veterans Benefits Administration (VBA) is announcing an opportunity for public comment on the proposed collection of certain information by the agency. Under the Paperwork Reduction Act (PRA) of 1995, Federal agencies are required to publish notice in the **Federal Register** concerning each proposed collection of information, including each proposed extension of a currently approved collection, and allow 60 days for public comment in response to the notice. This notice solicits comments on information needed to confirm marital status and dependent children.

DATES: Written comments and recommendations on the proposed collection of information should be received on or before December 3, 2010.

ADDRESSES: Submit written comments on the collection of information through Federal Docket Management System (FDMS) at *http://www.Regulations.gov* or to Nancy J. Kessinger, Veterans Benefits Administration (20M35), Department of Veterans Affairs, 810 Vermont Avenue, NW., Washington, DC 20420 or e-mail *nancy.kessinger@va.gov.* Please refer to "OMB Control No. 2900–0043" in any correspondence. During the comment period, comments may be viewed online through the FDMS.

FOR FURTHER INFORMATION CONTACT: Nancy J. Kessinger at (202) 461–9769 or FAX (202) 275–5947.

SUPPLEMENTARY INFORMATION: Under the PRA of 1995 (Pub. L. 104–13; 44 U.S.C. 3501–3521), Federal agencies must obtain approval from OMB for each collection of information they conduct or sponsor. This request for comment is being made pursuant to Section 3506(c)(2)(A) of the PRA.

With respect to the following collection of information, VBA invites comments on: (1) Whether the proposed collection of information is necessary for the proper performance of VBA's functions, including whether the information will have practical utility; (2) the accuracy of VBA's estimate of the burden of the proposed collection of information; (3) ways to enhance the quality, utility, and clarity of the information to be collected; and (4) ways to minimize the burden of the collection of information on respondents, including through the use of automated collection techniques or the use of other forms of information technology.

Title: Declaration of Status of Dependents, VA Form 21–686c.

OMB Control Number: 2900–0043.

Type of Review: Extension of a currently approved collection.

Abstract: The form is used to obtain information to confirm marital status and existence of any dependent child(ren). The information is used by VA to determine eligibility and rate of payment for veterans and surviving spouses who are entitled to an additional allowance for dependents.

Affected Public: Individuals or households.

Estimated Annual Burden: 56,500 hours.

Estimated Average Burden per Respondent: 15 minutes.

Frequency of Response: On occasion.

Estimated Number of Respondents: 226,000.

Dated: September 28, 2010.

By direction of the Secretary.

Denise McLamb,

Program Analyst, Enterprise Records Service.

[FR Doc. 2010–24796 Filed 10–1–10; 8:45 am]

BILLING CODE 8320–01–P

DEPARTMENT OF VETERANS AFFAIRS

[OMB Control No. 2900–0116]

Proposed Information Collection (Notice to Department of Veterans Affairs of Veteran or Beneficiary Incarcerated in Penal Institution) Activity: Comment Request

AGENCY: Veterans Benefits Administration, Department of Veterans Affairs.

ACTION: Notice.

SUMMARY: The Veterans Benefits Administration (VBA) is announcing an opportunity for public comment on the proposed collection of certain information by the agency. Under the Paperwork Reduction Act (PRA) of 1995, Federal agencies are required to publish notice in the **Federal Register** concerning each proposed collection of information, including each proposed extension of a currently approved collection, and allow 60 days for public comment in response to the notice. This notice solicits comments for information needed from penal institutions regarding incarcerated VA beneficiaries.

DATES: Written comments and recommendations on the proposed collection of information should be received on or before December 3, 2010.

ADDRESSES: Submit written comments on the collection of information through Federal Docket Management System (FDMS) at *http://www.Regulations.gov* or to Nancy J. Kessinger, Veterans Benefits Administration (20M35), Department of Veterans Affairs, 810 Vermont Avenue, NW., Washington, DC 20420 or e-mail *nancy.kessinger@va.gov.* Please refer to "OMB Control No. 2900–0116" in any correspondence. During the comment period, comments may be viewed online through the FDMS.

FOR FURTHER INFORMATION CONTACT: Nancy J. Kessinger at (202) 461–9769 or FAX (202) 275–5947.

SUPPLEMENTARY INFORMATION: Under the PRA of 1995 (Pub. L. 104–13; 44 U.S.C. 3501–3521), Federal agencies must obtain approval from the Office of Management and Budget (OMB) for each collection of information they conduct or sponsor. This request for comment is being made pursuant to Section 3506(c)(2)(A) of the PRA.

With respect to the following collection of information, VBA invites comments on: (1) Whether the proposed collection of information is necessary for the proper performance of VBA's functions, including whether the information will have practical utility;

(2) the accuracy of VBA's estimate of the burden of the proposed collection of information; (3) ways to enhance the quality, utility, and clarity of the information to be collected; and (4) ways to minimize the burden of the collection of information on respondents, including through the use of automated collection techniques or the use of other forms of information technology.

Title: Notice to Department of Veterans Affairs of Veteran or Beneficiary Incarcerated in Penal Institution, VA Form 21–4193.

OMB Control Number: 2900–0116.

Type of Review: Extension of a currently approved collection.

Abstract: The data collected on VA Form 21–4193 is used to determine whether a beneficiary's VA compensation or pension rate should be reduced or terminated when he or she is incarcerated in a penal institution in excess of 60 days after conviction.

Affected Public: Federal Government, and State, Local or Tribal Government.

Estimated Annual Burden: 416 hours.

Estimated Average Burden per Respondent: 15 minutes.

Frequency of Response: One-time.

Estimated Number of Respondents: 1,664.

Dated: September 28, 2010.

By direction of the Secretary.

Denise McLamb,

Program Analyst, Enterprise Records Service.

[FR Doc. 2010–24739 Filed 10–1–10; 8:45 am]

BILLING CODE 8320–01–P

DEPARTMENT OF VETERANS AFFAIRS

[OMB Control No. 2900–0216]

Proposed Information Collection (Application for Accrued Amounts Due a Deceased Beneficiary) Activity: Comment Request

AGENCY: Veterans Benefits Administration, Department of Veterans Affairs.

ACTION: Notice.

SUMMARY: The Veterans Benefits Administration (VBA), Department of Veterans Affairs (VA), is announcing an opportunity for public comment on the proposed collection of certain information by the agency. Under the Paperwork Reduction Act (PRA) of 1995, Federal agencies are required to publish notice in the **Federal Register** concerning each proposed collection of information, including each proposed extension of a currently approved collection, and allow 60 days for public comment in response to the notice. This notice solicits comments on information needed to determine a claimant's entitlement to accrued benefits.

DATES: Written comments and recommendations on the proposed collection of information should be received on or before December 3, 2010.

ADDRESSES: Submit written comments on the collection of information through *http://www.Regulations.gov* or to Nancy J. Kessinger, Veterans Benefits Administration (20M35), Department of Veterans Affairs, 810 Vermont Avenue, NW., Washington, DC 20420 or e-mail to *nancy.kessinger@va.gov.* Please refer to "OMB Control No. 2900–0216" in any correspondence. During the comment period, comments may be viewed online through the Federal Docket Management System (FDMS) at *http://www.Regulations.gov.*

FOR FURTHER INFORMATION CONTACT: Nancy J. Kessinger at (202) 461–9769 or FAX (202) 275–5947.

SUPPLEMENTARY INFORMATION: Under the PRA of 1995 (Pub. L. 104–13; 44 U.S.C. 3501–3521), Federal agencies must obtain approval from the Office of Management and Budget (OMB) for each collection of information they conduct or sponsor. This request for comment is being made pursuant to Section 3506(c)(2)(A) of the PRA.

With respect to the following collection of information, VBA invites comments on: (1) Whether the proposed collection of information is necessary for the proper performance of VBA's functions, including whether the information will have practical utility; (2) the accuracy of VBA's estimate of the burden of the proposed collection of information; (3) ways to enhance the quality, utility, and clarity of the information to be collected; and (4) ways to minimize the burden of the collection of information on respondents, including through the use of automated collection techniques or the use of other forms of information technology.

Title: Application for Accrued Amounts Due a Deceased Beneficiary, VA Form 21–601.

OMB Control Number: 2900–0216.

Type of Review: Extension of a currently approved collection.

Abstract: The information collected on VA Form 21–601 is used to determine a claimant's entitlement to accrued benefits that was due to a deceased veteran but not paid prior to the veteran's death. Each survivor claiming a share of the accrued benefits must complete a separate VA Form 21–601; however if there are no living survivors who are entitled on the basis of relationship, accrued benefits may be payable as reimbursement to the person or persons who bore the expenses of the veteran's last illness and burial expenses.

Affected Public: Individuals or households.

Estimated Annual Burden: 2,300 hours.

Estimated Average Burden per Respondent: 30 minutes.

Frequency of Response: One time.

Estimated Number of Respondents: 4,600.

Dated: September 28, 2010.

By direction of the Secretary.

Denise McLamb,

Program Analyst, Enterprise Records Service.

[FR Doc. 2010–24741 Filed 10–1–10; 8:45 am]

BILLING CODE 8320–01–P

DEPARTMENT OF VETERANS AFFAIRS

[OMB Control No. 2900–0095]

Proposed Information Collection (Pension Claim Questionnaire for Farm Income) Activity: Comment Request

AGENCY: Veterans Benefits Administration, Department of Veterans Affairs.

ACTION: Notice.

SUMMARY: The Veterans Benefits Administration (VBA), Department of Veterans Affairs (VA), is announcing an opportunity for public comment on the proposed collection of certain information by the agency. Under the Paperwork Reduction Act (PRA) of 1995, Federal agencies are required to publish notice in the **Federal Register** concerning each proposed collection of information, including each proposed extension of a currently approved collection and allow 60 days for public comment in response to the notice. This notice solicits comments on information needed to determine net income derived from farming.

DATES: Written comments and recommendations on the proposed collection of information should be received on or before December 3, 2010.

ADDRESSES: Submit written comments on the collection of information through Federal Docket Management System (FDMS) at *http://www.Regulations.gov* or to Nancy J. Kessinger, Veterans Benefits Administration (20M35), Department of Veterans Affairs, 810 Vermont Avenue, NW., Washington, DC 20420 or e-mail *nancy.kessinger@va.gov.* Please refer to "OMB Control No. 2900–0095" in any correspondence. During the comment

period, comments may be viewed online through the FDMS.

FOR FURTHER INFORMATION CONTACT: Nancy J. Kessinger at (202) 461–9769 or FAX (202) 275–5947.

SUPPLEMENTARY INFORMATION: Under the PRA of 1995 (Pub. L. 104–13; 44 U.S.C. 3501–3521), Federal agencies must obtain approval from the Office of Management and Budget (OMB) for each collection of information they conduct or sponsor. This request for comment is being made pursuant to Section 3506(c)(2)(A) of the PRA.

With respect to the following collection of information, VBA invites comments on: (1) Whether the proposed collection of information is necessary for the proper performance of VBA's functions, including whether the information will have practical utility; (2) the accuracy of VBA's estimate of the burden of the proposed collection of information; (3) ways to enhance the quality, utility, and clarity of the information to be collected; and (4) ways to minimize the burden of the collection of information on respondents, including through the use of automated collection techniques or the use of other forms of information technology.

Title: Pension Claim Questionnaire for Farm Income, VA Form 21–4165.

OMB Control Number: 2900–0095.

Type of Review: Extension of a currently approved collection.

Abstract: VA Form 21–4165 is used to gather information necessary to determine a claimant's countable annual income and available assets due to farm operations. Farm income is not necessarily received on a weekly or monthly basis, and farm operating expenses must be considered in determining a claimant's eligibility to income-based benefits.

Affected Public: Individuals or households, and Farms.

Estimated Annual Burden: 1,038 hours.

Estimated Average Burden Per Respondent: 30 minutes.

Frequency of Response: Annually.

Estimated Number of Respondents: 2,075.

Dated: September 28, 2010.

By direction of the Secretary.

Denise McLamb,

Program Analyst, Enterprise Records Service.

[FR Doc. 2010–24742 Filed 10–1–10; 8:45 am]

BILLING CODE 8320–01–P

DEPARTMENT OF VETERANS AFFAIRS

[OMB Control No. 2900–0654]

Proposed Information Collection (Annual Certification of Veteran Status and Veteran-Relatives) Activity: Comment Request

AGENCY: Veterans Benefits Administration, Department of Veterans Affairs.

ACTION: Notice.

SUMMARY: The Veterans Benefits Administration (VBA) is announcing an opportunity for public comment on the proposed collection of certain information by the agency. Under the Paperwork Reduction Act (PRA) of 1995, Federal agencies are required to publish notice in the **Federal Register** concerning each proposed collection of information, including each proposed extension of a currently approved collection, and allow 60 days for public comment in response to the notice. This notice solicits comments on information needed to identify and properly protect VA benefit records.

DATES: Written comments and recommendations on the proposed collection of information should be received on or before December 3, 2010.

ADDRESSES: Submit written comments on the collection of information through Federal Docket Management System (FDMS) at *http://www.Regulations.gov* or to Nancy J. Kessinger, Veterans Benefits Administration (20M35), Department of Veterans Affairs, 810 Vermont Avenue, NW., Washington, DC 20420 or e-mail *nancy.kessinger@va.gov*. Please refer to "OMB Control No. 2900–0654" in any correspondence. During the comment period, comments may be viewed online through the FDMS.

FOR FURTHER INFORMATION CONTACT: Nancy J. Kessinger at (202) 461–9769 or FAX (202) 275–5947.

SUPPLEMENTARY INFORMATION: Under the PRA of 1995 (Pub. L. 104–13; 44 U.S.C. 3501–3521), Federal agencies must obtain approval from the Office of Management and Budget (OMB) for each collection of information they conduct or sponsor. This request for comment is being made pursuant to Section 3506(c)(2)(A) of the PRA.

With respect to the following collection of information, VBA invites comments on: (1) Whether the proposed collection of information is necessary for the proper performance of VBA's functions, including whether the information will have practical utility; (2) the accuracy of VBA's estimate of the burden of the proposed collection of information; (3) ways to enhance the quality, utility, and clarity of the information to be collected; and (4) ways to minimize the burden of the collection of information on respondents, including through the use of automated collection techniques or the use of other forms of information technology.

Title: Annual Certification of Veteran Status and Veteran-Relatives, VA Form 20–0344.

OMB Control Number: 2900–0654.

Type of Review: Extension of a currently approved collection.

Abstract: VBA employees, non-VBA employees in VBA space and Veteran Service Organization employees who have access to VA's benefit records complete VA Form 20–0344. These individuals are required to provide personal identifying information on themselves and any veteran relatives, in order for VA to identify and protect benefit records. VA uses the information collected to determine which benefit records require special handling to guard against fraud, conflict of interest, improper influence etc., by VA and non-VA employees.

Affected Public: Individuals or households.

Estimated Annual Burden: 5,834 hours.

Estimated Average Burden Per Respondent: 25 minutes.

Frequency of Response: Annually.

Estimated Number of Respondents: 14,000.

Dated: September 29, 2010.

By direction of the Secretary.

Denise McLamb,

Program Analyst, Enterprise Records Service.

[FR Doc. 2010–24795 Filed 10–1–10; 8:45 am]

BILLING CODE 8320–01–P

DEPARTMENT OF VETERANS AFFAIRS

[OMB Control No. 2900–0045]

Proposed Information Collection (VA Request for Determination of Reasonable Value) Activity: Comment Request

AGENCY: Veterans Benefits Administration, Department of Veterans Affairs.

ACTION: Notice.

SUMMARY: The Veterans Benefits Administration (VBA), Department of Veterans Affairs (VA), is announcing an opportunity for public comment on the proposed collection of certain information by the agency. Under the

Paperwork Reduction Act (PRA) of 1995, Federal agencies are required to publish notice in the **Federal Register** concerning each proposed collection of information, including each proposed extension of a currently approved collection, and allow 60 days for public comment in response to the notice. This notice solicits comments for information needed to determine the reasonable value of properties for guaranteed or direct home loans.

DATES: Written comments and recommendations on the proposed collection of information should be received on or before December 3, 2010.

ADDRESSES: Submit written comments on the collection of information through the Federal Docket Management System (FDMS) at *http://www.Regulations.gov* or to Nancy J. Kessinger, Veterans Benefits Administration (20M35), Department of Veterans Affairs, 810 Vermont Avenue, NW., Washington, DC 20420 or e-mail *nancy.kessinger@va.gov*. Please refer to "OMB Control No. 2900–0045" in any correspondence. During the comment period, comments may be viewed online through FDMS.

FOR FURTHER INFORMATION CONTACT: Nancy J. Kessinger at (202) 461–9769 or FAX (202) 275–5947.

SUPPLEMENTARY INFORMATION: Under the PRA of 1995 (Pub. L. 104–13; 44 U.S.C. 3501—3521), Federal agencies must obtain approval from the Office of Management and Budget (OMB) for each collection of information they conduct or sponsor. This request for comment is being made pursuant to Section 3506(c)(2)(A) of the PRA.

With respect to the following collection of information, VBA invites comments on: (1) Whether the proposed collection of information is necessary for the proper performance of VBA's functions, including whether the information will have practical utility; (2) the accuracy of VBA's estimate of the burden of the proposed collection of information; (3) ways to enhance the quality, utility, and clarity of the information to be collected; and (4) ways to minimize the burden of the collection of information on respondents, including through the use of automated collection techniques or the use of other forms of information technology.

Title: VA Request for Determination of Reasonable Value, VA Form 26–1805 and 26–1805–1.

OMB Control Number: 2900–0045.

Type of Review: Extension of a currently approved collection.

Abstract: VA Forms 26–1805 and 26–1805–1 are used to identify properties to be appraised and to make assignments to an appraiser. VA home loans cannot be guaranteed or made unless the nature and conditions of the property is suitable for dwelling purposes is determined; the loan amount to be paid by the veteran for such property for the cost of construction, repairs, or alterations does not exceed the reasonable value; or if the loan is for repair, alteration, or improvements of property, the work substantially protects or improves the basic livability of the property. VA or the lender's participating in the lender appraisal processing program issues a notice of values to notify the veteran and requester of the determination of reasonable value and any conditional requirements.

Affected Public: Individuals or households.

Estimated Annual Burden: 60,000 hours.

Estimated Average Burden Per Respondent: 12 minutes.

Frequency of Response: On occasion.

Estimated Number of Respondents: 300,000.

Dated: September 29, 2010.

By direction of the Secretary.

Denise McLamb,

Program Analyst, Enterprise Records Service.

[FR Doc. 2010–24797 Filed 10–1–10; 8:45 am]

BILLING CODE 8320–01–P

DEPARTMENT OF VETERANS AFFAIRS

[OMB Control No. 2900–0568]

Proposed Information Collection (Submission of School Catalog to the State Approving Agency) Activity: Comment Request

AGENCY: Veterans Benefits Administration, Department of Veterans Affairs.

ACTION: Notice.

SUMMARY: The Veterans Benefits Administration (VBA), Department of Veterans Affairs (VA), is announcing an opportunity for public comment on the proposed collection of certain information by the agency. Under the Paperwork Reduction Act (PRA) of 1995, Federal agencies are required to publish notice in the **Federal Register** concerning each proposed collection of information, including each proposed extension of a currently approved collection and allow 60 days for public comment in response to the notice. This notice solicits comments on information needed from accredited and nonaccredited educational institutions.

DATES: Written comments and recommendations on the proposed collection of information should be received on or before December 3, 2010.

ADDRESSES: Submit written comments on the collection of information through the Federal Docket Management System (FDMS) at *http://www.Regulations.gov;* or to Nancy J. Kessinger, Veterans Benefits Administration (20M35), Department of Veterans Affairs, 810 Vermont Avenue, NW., Washington, DC 20420 or e-mail to *nancy.kessinger@va.gov.* Please refer to "OMB Control No. 2900–0568" in any correspondence. During the comment period, comments may be viewed online through FDMS.

FOR FURTHER INFORMATION CONTACT: Nancy J. Kessinger at (202) 461–9769 or FAX (202) 275–5947.

SUPPLEMENTARY INFORMATION: Under the PRA of 1995 (Pub. L. 104–13; 44 U.S.C. 3501–3521), Federal agencies must obtain approval from the Office of Management and Budget (OMB) for each collection of information they conduct or sponsor. This request for comment is being made pursuant to Section 3506(c)(2)(A) of the PRA.

With respect to the following collection of information, VBA invites comments on: (1) Whether the proposed collection of information is necessary for the proper performance of VBA's functions, including whether the information will have practical utility; (2) the accuracy of VBA's estimate of the burden of the proposed collection of information; (3) ways to enhance the quality, utility, and clarity of the information to be collected; and (4) ways to minimize the burden of the collection of information on respondents, including through the use of automated collection techniques or the use of other forms of information technology.

Title: Submission of School Catalog to the State Approving Agency.

OMB Control Number: 2900–0568.

Type of Review: Extension of a previously approved collection.

Abstract: Accredited and nonaccredited educational institutions, with the exceptions of elementary and secondary schools, must submit copies of their catalog to State approving agency when applying for approval of a new course. State approval agencies use the catalog to determine what courses can be approved for VA training. VA pays educational assistance to veterans, persons on active duty or reservists, and eligible persons pursuing an approved program of education. Educational assistance is not payable when claimants pursue unapproved courses.

Affected Public: Not-for-profit institutions.

Estimated Annual Burden: 2,000 hours.

Estimated Average Burden Per Respondent: 15 minutes.

Frequency of Response: On Occasion.

Estimated Number of Respondents: 8,000.

Dated: September 29, 2010.

By direction of the Secretary.

Denise McLamb,

Program Analyst, Enterprise Records Service.

[FR Doc. 2010–24794 Filed 10–1–10; 8:45 am]

BILLING CODE 8320–01–P

DEPARTMENT OF VETERANS AFFAIRS

[OMB Control No. 2900–0065]

Proposed Information Collection (Request for Employment Information in Connection With Claim for Disability Benefits) Activity: Comment Request

AGENCY: Veterans Benefits Administration, Department of Veterans Affairs.

ACTION: Notice.

SUMMARY: The Veterans Benefits Administration (VBA) is announcing an opportunity for public comment on the proposed collection of certain information by the agency. Under the Paperwork Reduction Act (PRA) of 1995, Federal agencies are required to publish notice in the **Federal Register** concerning each proposed collection of information, including each proposed extension of a currently approved collection, and allow 60 days for public comment in response to the notice. This notice solicits comments on the information needed to determine a claimant's eligibility for increased disability benefits.

DATES: Written comments and recommendations on the proposed collection of information should be received on or before December 3, 2010.

ADDRESSES: Submit written comments on the collection of information through Federal Docket Management System (FDMS) at *http://www.Regulations.gov* or to Nancy J. Kessinger, Veterans Benefits Administration (20M35), Department of Veterans Affairs, 810 Vermont Avenue, NW., Washington, DC 20420 or e-mail *nancy.kessinger@va.gov.* Please refer to "OMB Control No. 2900–0065" in any correspondence. During the comment period, comments may be viewed online through the FDMS.

FOR FURTHER INFORMATION CONTACT: Nancy J. Kessinger at (202) 461–9769 or FAX (202) 275–5947.

SUPPLEMENTARY INFORMATION: Under the PRA of 1995 (Pub. L. 104–13; 44 U.S.C. 3501–3521), Federal agencies must obtain approval from the Office of Management and Budget (OMB) for each collection of information they conduct or sponsor. This request for comment is being made pursuant to Section 3506(c)(2)(A) of the PRA.

With respect to the following collection of information, VBA invites comments on: (1) Whether the proposed collection of information is necessary for the proper performance of VBA's functions, including whether the information will have practical utility; (2) the accuracy of VBA's estimate of the burden of the proposed collection of information; (3) ways to enhance the quality, utility, and clarity of the information to be collected; and (4) ways to minimize the burden of the collection of information on respondents, including through the use of automated collection techniques or the use of other forms of information technology.

Title: Request for Employment Information in Connection With Claim for Disability Benefits, VA Form 21–4192.

OMB Control Number: 2900–0065.

Type of Review: Extension of a currently approved collection.

Abstract: VA Form 21–4192 is used to request employment information from a claimant's employer. The collected data is used to determine the claimant's eligibility for increased disability benefits based on unemployability.

Affected Public: Business or other for-profit.

Estimated Annual Burden: 15,000 hours.

Estimated Average Burden per Respondent: 15 minutes.

Frequency of Response: One time.

Estimated Number of Respondents: 60,000.

Dated: September 28, 2010.

By direction of the Secretary.

Denise McLamb,

Program Analyst, Enterprise Records Service.

[FR Doc. 2010–24743 Filed 10–1–10; 8:45 am]

BILLING CODE 8320–01–P

DEPARTMENT OF VETERANS AFFAIRS

[OMB Control No. 2900–0089]

Proposed Information Collection (Statement of Dependency of Parent(s)) Activity: Comment Request

AGENCY: Veterans Benefits Administration, Department of Veterans Affairs.

ACTION: Notice.

SUMMARY: The Veterans Benefits Administration (VBA), Department of Veterans Affairs (VA), is announcing an opportunity for public comment on the proposed collection of certain information by the agency. Under the Paperwork Reduction Act (PRA) of 1995, Federal agencies are required to publish notice in the **Federal Register** concerning each proposed collection of information, including each proposed extension of a currently approved collection and allow 60 days for public comment in response to the notice. This notice solicits comments on the information needed to establish a claimant's parents' dependency.

DATES: Written comments and recommendations on the proposed collection of information should be received on or before December 3, 2010.

ADDRESSES: Submit written comments on the collection of information through Federal Docket Management System (FDMS) at *http://www.Regulations.gov* or to Nancy J. Kessinger, Veterans Benefits Administration (20M35), Department of Veterans Affairs, 810 Vermont Avenue, NW., Washington, DC 20420 or e-mail *nancy.kessinger@va.gov*. Please refer to "OMB Control No. 2900–0089" in any correspondence. During the comment period, comments may be viewed online through the FDMS.

FOR FURTHER INFORMATION CONTACT: Nancy J. Kessinger at (202) 461–9769 or FAX (202) 275–5947.

SUPPLEMENTARY INFORMATION: Under the PRA of 1995 (Pub. L. 104–13; 44 U.S.C. 3501–3521), Federal agencies must obtain approval from the Office of Management and Budget (OMB) for each collection of information they conduct or sponsor. This request for comment is being made pursuant to Section 3506(c)(2)(A) of the PRA.

With respect to the following collection of information, VBA invites comments on: (1) Whether the proposed collection of information is necessary for the proper performance of VBA's functions, including whether the information will have practical utility; (2) the accuracy of VBA's estimate of the

burden of the proposed collection of information; (3) ways to enhance the quality, utility, and clarity of the information to be collected; and (4) ways to minimize the burden of the collection of information on respondents, including through the use of automated collection techniques or the use of other forms of information technology.

Title: Statement of Dependency of Parent(s), VA Form 21–509.

OMB Control Number: 2900–0089.

Type of Review: Extension of a currently approved collection.

Abstract: Veterans receiving compensation benefits based on 30 percent or higher for service-connected injuries and depends on his or her parent(s) for support complete VA Form 21–509 to report income and dependency information. Surviving parents of deceased veterans are required to establish dependency only if they are seeking death compensation. Death compensation is payable when a veteran died on active duty or due to service-connected disabilities prior to January 1, 1957, or died between May 1, 1957 and January 1, 1972 while the veteran's waiver of U.S. Government Life Insurance was in effect. The data collected will be used to determine the dependent parent(s) eligibility for benefits.

Affected Public: Individuals or households.

Estimated Annual Burden: 4,000 hours.

Estimated Average Burden per Respondent: 30 minutes.

Frequency of Response: One-time.

Estimated Number of Respondents: 8,000.

Dated: September 28, 2010.

By direction of the Secretary.

Denise McLamb,

Program Analyst, Enterprise Records Service.

[FR Doc. 2010–24740 Filed 10–1–10; 8:45 am]

BILLING CODE 8320–01–P

DEPARTMENT OF VETERANS AFFAIRS

[OMB Control No. 2900–0474]

Proposed Information Collection (Create Payment Request for the VA Funding Fee Payment System (VA FFPS); A Computer Generated Funding Fee Receipt) Activity: Comment Request

AGENCY: Veterans Benefits Administration, Department of Veterans Affairs.

ACTION: Notice.

SUMMARY: The Veterans Benefits Administration (VBA), Department of Veterans Affairs (VA), is announcing an opportunity for public comment on the proposed collection of certain information by the agency. Under the Paperwork Reduction Act (PRA) of 1995, Federal agencies are required to publish notice in the **Federal Register** concerning each proposed collection of information, including each proposed extension of a currently approved collection, and allow 60 days for public comment in response to the notice. This notice solicits comments on information needed to determine whether funding fees for VA guaranteed loans were paid.

DATES: Written comments and recommendations on the proposed collection of information should be received on or before December 3, 2010.

ADDRESSES: Submit written comments on the collection of information through the Federal Docket Management System (FDMS) at *http://www.Regulations.gov* or to Nancy J. Kessinger, Veterans Benefits Administration (20M35), Department of Veterans Affairs, 810 Vermont Avenue, NW., Washington, DC 20420 or e-mail *nancy.kessinger@va.gov.* Please refer to "OMB Control No. 2900–0474" in any correspondence. During the comment period, comments may be viewed online through FDMS.

FOR FURTHER INFORMATION CONTACT: Nancy J. Kessinger at (202) 461–9769 or FAX (202) 275–5947.

SUPPLEMENTARY INFORMATION: Under the PRA of 1995 (Pub. L. 104–13; 44 U.S.C. 3501–3521), Federal agencies must obtain approval from the Office of Management and Budget (OMB) for each collection of information they conduct or sponsor. This request for comment is being made pursuant to Section 3506(c)(2)(A) of the PRA.

With respect to the following collection of information, VBA invites comments on: (1) Whether the proposed collection of information is necessary for the proper performance of VBA's functions, including whether the information will have practical utility; (2) the accuracy of VBA's estimate of the burden of the proposed collection of information; (3) ways to enhance the quality, utility, and clarity of the information to be collected; and (4) ways to minimize the burden of the collection of information on respondents, including through the use of automated collection techniques or the use of other forms of information technology.

Title: Create Payment Request for the VA Funding Fee Payment System (VA FFPS); A Computer Generated Funding Fee Receipt, VA Form 26–8986.

OMB Control Number: 2900–0474.

Type of Review: Extension of a currently approved collection.

Abstract: Veterans obtaining a VA-guaranteed home loan must pay a funding fee to VA before the loan can be guaranteed. The only exceptions are loans made to veterans receiving VA compensation for service-connected disabilities, (or veterans whom, but for receipt of retirement pay, would be entitled to receive compensation) and unmarried surviving spouses of veterans who died in active military service or from service-connected disability regardless of whether the spouse has his or her own eligibility.

Affected Public: Business or other for profit.

Estimated Annual Burden: 8,000 hours.

Estimated Average Burden per Respondent: 2 minutes.

Frequency of Response: One-time.

Estimated Number of Respondents: 240,000.

Dated: September 29, 2010.

By direction of the Secretary.

Denise McLamb,

Program Analyst, Enterprise Records Service.

[FR Doc. 2010–24798 Filed 10–1–10; 8:45 am]

BILLING CODE 8320–01–P

Federal Register

Monday,
October 4, 2010

Part II

Department of Housing and Urban Development

Final Fair Market Rents for Fiscal Year 2011 for the Housing Choice Voucher Program and Moderate Rehabilitation Single Room Occupancy Program; Notice

DEPARTMENT OF HOUSING AND URBAN DEVELOPMENT

[Docket No. FR–5430–N–02]

Final Fair Market Rents for Fiscal Year 2011 for the Housing Choice Voucher Program and Moderate Rehabilitation Single Room Occupancy Program

AGENCY: Office of the Assistant Secretary for Policy Development and Research, HUD.

ACTION: Notice of Final Fair Market Rents (FMRs) for Fiscal Year (FY) 2011.

SUMMARY: Section 8(c)(1) of the United States Housing Act of 1937 (USHA) requires the Secretary to publish FMRs periodically, but not less than annually, adjusted to be effective on October 1 of each year. The primary uses of FMRs are to determine payment standards for the Housing Choice Voucher program, to determine initial renewal rents for some expiring project-based Section 8 contracts, to determine initial rents for housing assistance payment (HAP) contracts in the Moderate Rehabilitation Single Room Occupancy program (Mod Rehab), and to serve as rent ceilings in the HOME program. Today's notice provides final FY 2011 FMRs for all areas that reflect the estimated 40th and 50th percentile rent levels trended to April 1, 2011. The FY 2011 FMRs are based on 2000 Census data updated with more current survey data. For FY 2011, FY 2010 FMRs are updated using 2008 American Community Survey (ACS) data, and Consumer Price Index (CPI) rent and utility indexes through the year end of 2009. HUD continues to use ACS data in different ways according to how many two-bedroom standard-quality and recent-mover sample cases are available in the FMR area or its Core-Based Statistical Area (CBSA). As proposed in the August 4, 2010, notice (75 FR 46958), this notice establishes FY 2011 Small Area FMRs for the Housing Choice Voucher program in the Dallas, TX HUD Metropolitan FMR Area (HMFA). All Public Housing Authorities (PHAs) operating in the 8-county HMFA must use the Small Area FMRs from Schedule B Addendum (listed by county and ZIP code) for the voucher program. All other programs that use FMRs will continue to use area-wide FMRs shown in Schedule B for Dallas, TX HMFA.

DATES: *Effective Date:* The FMRs published in this notice are effective on October 1, 2010.

FOR FURTHER INFORMATION CONTACT: For technical information on the methodology used to develop FMRs or a listing of all FMRs, please call the HUD USER information line at (800) 245–2691 or access the information at the following link on the HUD Web site: *http://www.huduser.org/datasets/fmr.html.* FMRs are listed at the 40th or 50th percentile in Schedule B. An asterisk before the FMR area name identifies a 50th percentile area. Any questions related to use of FMRs or voucher payment standards should be directed to the respective local HUD program staff. Questions on how to conduct FMR surveys or further methodological explanations may be addressed to Marie L. Lihn or Mark Stanton, Economic and Market Analysis Division, Office of Economic Affairs, Office of Policy Development and Research, telephone number (202) 708–0590. Persons with hearing or speech impairments may access this number through TTY by calling the toll-free Federal Information Relay Service at (800) 877–8339. (Other than the HUD USER information line and TTY numbers, telephone numbers are not toll-free.)

SUPPLEMENTARY INFORMATION:

I. Background

Section 8 of the USHA (42 U.S.C. 1437f) authorizes housing assistance to aid lower-income families in renting safe and decent housing. Housing assistance payments are limited by FMRs established by HUD for different areas. In the Housing Choice Voucher program, the FMR is the basis for determining the "payment standard amount" used to calculate the maximum monthly subsidy for an assisted family (*see* 24 CFR 982.503). In general, the FMR for an area is the amount that would be needed to pay the gross rent (shelter rent plus utilities) of privately owned, decent, and safe rental housing of a modest (non-luxury) nature with suitable amenities. In addition, all rents subsidized under the Housing Choice Voucher program must meet reasonable rent standards. The interim rule published on October 2, 2000 (65 FR 58870), established 50th percentile FMRs for certain areas.

Electronic Data Availability: This **Federal Register** notice is available electronically from the HUD Web site at *http://www.hudclips.org.* **Federal Register** notices also are available electronically from the U.S. Government Printing Office Web site, *http://www.gpoaccess.gov/fr/index.html.* Complete documentation of the methodology and data used to compute each area's Final FY 2011 FMRs is available at *http://www.huduser.org/datasets/fmr/fmrs/index.asp?data=fmr11.*

II. Procedures for the Development of FMRs

Section 8(c) of the USHA requires the Secretary of HUD to publish FMRs periodically, but not less frequently than annually. Section 8(c) states in part, as follows:

> Proposed fair market rentals for an area shall be published in the **Federal Register** with reasonable time for public comment and shall become effective upon the date of publication in final form in the **Federal Register**. Each fair market rental in effect under this subsection shall be adjusted to be effective on October 1 of each year to reflect changes—based on the most recent available data trended so the rentals will be current for the year to which they apply—of rents for existing or newly constructed rental dwelling units, as the case may be, of various sizes and types in this section.

The Department's regulations at 24 CFR part 888 provide that HUD will develop proposed FMRs, publish them for public comment, provide a public comment period of at least 30 days, analyze the comments, and publish final FMRs (*See* 24 CFR 888.115).

In addition, HUD's regulations at 24 CFR 888.113 set out procedures for HUD to assess whether areas are eligible for FMRs at the 50th percentile. Areas that currently have 50th percentile FMRs are evaluated for progress in voucher tenant deconcentration after three years in the program. Continued eligibility is determined using HUD administrative data that show levels of voucher tenant concentration. The levels of voucher holder concentration must be above 25 percent and show a decrease in concentration since the last evaluation. At least 85 percent of the voucher units in the area must be used to make this determination. For FY 2011, there were 17 areas that were designated as 50th percentile areas. None of the current 50th percentile FMR areas were evaluated this year because they have not completed three years of program participation. As listed below, 10 areas complete their three-year program period and will be evaluated to determine if they remain 50th percentile FMR areas in the proposed FY 2012 FMR publication.

FY 2010 50TH-PERCENTILE FMR AREAS NOT SLATED FOR ELIGIBILITY EVALUATION UNTIL FY 2012 FMRS

Albuquerque, NM MSA	North Point-Bradenton-Sarasota, FL MSA
Chicago-Naperville-Joliet, IL HMFA	Denver-Aurora, CO MSA
Hartford-West Hartford-East Hartford, CT HMFA	Houston-Baytown-Sugar Land, TX HMFA
Kansas City, MO-KS, HMFA	Milwaukee-Waukesha-West Allis, WI MSA
Richmond, VA HMFA	Tacoma, WA HMFA

An additional seven current 50th percentile FMR areas complete their three-year program period and will be evaluated to determine if they remain 50th percentile FMR areas in the proposed FY 2013 FMR, as shown below.

FY 2010 50TH-PERCENTILE FMR AREAS NOT SLATED FOR ELIGIBILITY EVALUATION UNTIL FY 2013 FMRS

Baltimore-Towson, MD MSA	Fort Lauderdale, FL HMFA
Grand Rapids-Wyoming, MI HMFA	New Haven-Meriden, CT HMFA
Philadelphia-Camden-Wilmington, PA-NJ-DE-MD MSA	Washington-Arlington-Alexandria, DC-VA-MD HMFA
West Palm Beach-Boca Raton, FL HMFA	

As noted in the publication of proposed FY 2011 FMRs, an additional area qualified for 50th percentile FMRs and will be eligible for review with the proposed FY 2014 FMRs. This area is Bergen-Passaic, NJ HMFA.

III. Proposed FY 2011 FMRs

On August 4, 2010 (75 FR 46958), HUD published proposed FY 2011 FMRs. As noted in the preamble to the proposed FMRs, the FMRs for FY 2011 reflect the use of both one-year and three-year 2008 ACS data to update June 2007 rent estimates for each area. In addition, the FY 2011 FMRs include all changes made to metropolitan area definitions made by the Office of Management and Budget (OMB) as of December 2009.

During the comment period, which ended September 3, 2010, HUD received 16 public comments on the proposed FY 2011 FMRs. None of the comments HUD received included the data needed to support FMR changes. Several of these comments expressed that proposed FY 2011 FMRs are incorrect for their respective market areas. One commenter noted an inconsistency in the methodology that is corrected and discussed in the following methodology section. The rest of the comments received are discussed in more detail later in this notice.

IV. FMR Methodology

The FY 2011 FMRs are based on current OMB metropolitan area definitions that were first used in the FY 2006 FMRs. The changes OMB made to the Metropolitan Area Definitions in December 2009 are incorporated. As of December 2009, there was a change in the principal cities of three metropolitan areas that resulted in a code change. These three metropolitan areas are: North Port-Bradenton-Sarasota, FL MSA, Crestview-Fort Walton Beach-Destin, FL MSA, and Steubenville-Weirton, OH–WV MSA. In Alaska, there was a name change for a nonmetropolitan borough, from Prince of Wales-Ketchikan Census Area, AK to Prince of Wales-Hyder Census Area, AK; and two other Alaskan boroughs were divided, from Skagway-Hoonah-Angoon to Skagway and Hoonah-Angoon boroughs; and from Wrangell-Petersburg to Wrangell and Petersburg boroughs. The area definitions based on 2000 Census data have the advantages of providing more relevant commuting interchange standards, and more current measures of housing market relationships than those based on 1990 Census data and used prior to the FY 2006 FMRs.

At HUD's request, the Census Bureau prepared a special publicly releasable census file that permits almost exact replication of HUD's 2000 Census Base Rent calculations, except for areas with few rental units. This data set is located on HUD's HUD USER Web site at *http://www.huduser.org/datasets/fmr/CensusRentData/*.

A. Data Sources—2000 Census and American Community Survey

As in all post-FY 2006 FMR publications, FY 2011 FMRs start with base rents generated using Census 2000 long form survey data. They are updated with American Community Survey (ACS) data and Bureau of Labor Statistics Consumer Price Index (CPI) data. FY 2011 FMRs are FY 2010 FMRs updated by replacing the CPI data used for FY 2010 FMRs with ACS 2008 survey data and updated with CPI data through the end of 2009. Specifically, the FY 2010 rent (as of date: April, 2010) is deflated to June 2007 by dividing it by 18 months of CPI data representing June 2007 through December 2008 inflation, and the usual 15 month trend factor. This June 2007 rent is the best and most recent rent estimate available using only ACS survey and eliminating all other update data. It is this rent that is updated with additional ACS data and new CPI data.

In order to preserve additional information gathered by HUD through random digit dialing (RDD) surveys, areas surveyed after June 2008 are updated separately, the details of which can be found at the Web site listed above.

B. Updates From 2007 to 2008–2008 ACS

ACS survey data continues to be applied to areas based on the type of area (CBSA, metropolitan subarea, or non-metropolitan county), the amount of survey data available, and the reliability of the survey estimates. Both one- and three-year ACS 2008 data are used to update June 2007 rents. HUD considered using the change in the three-year 2005–2007 ACS to three-year 2006–2008 ACS in place of the change from 2007 one-year ACS to 2008 one-year ACS, but the nature of the 3 year data mutes the effects of the more recent data, which HUD finds more important for achieving the objectives of the HCV program. Consequently, HUD calculates update factors using the change in ACS one-year data from 2007 to 2008. Beginning with the FY 2010 FMRs, HUD tests these rent changes for statistical significance [1]

[1] The change is considered statistically significant if $Z > 1.645$ where (see equation above) and EST_1 = ACS 2008 Estimate, EST_2 = ACS 2007 Estimate (or ACS 2006 Estimate when the change from 2006–2007 = 1), SE_1 = Standard Error of Estimate 1 and SE_2 = Standard Error of Estimate 2.

$$Z = \frac{EST_1 - EST_2}{\sqrt{\left(SE_1^2 + SE_1^2\right)}}$$

before applying them to the appropriate base rent. Any state- or metropolitan-level change that is not statistically significant is not applied. That is, the updated 2008 rent is the same as the 2007 rent if the applicable update factor does not represent a statistically significant change. HUD applied this test as a measure to minimize fluctuations in rents due to survey error. Metropolitan level rent changes are used for CBSA areas and subareas that have more than 200 standard quality cases in 2007 and 2008. All other areas are updated with state level rent changes. For subareas, State and CBSA change factors continue to be selected based on which factor brings the subarea rent closer to the CBSA-wide rent. Subareas which have 200 or more local standard quality survey observations are updated with their local area update factor.

The error measurement test and ACS-based update factor is revised from the proposed FY 2011 FMRs, in response to a comment. The commenter noted that using a z-test that compared the 2008 rent to the 2007 rent was not logical for areas where the 2007 ACS rent was never used in the update, or where the z-test last year (evaluating the change from 2006 to the 2007 ACS rent) was not statistically significant and HUD applied an ACS update factor of one. To correct this oversight, HUD revised the FMR estimation process for areas where there was no statistically significant difference between the 2006 and the 2007 ACS rent result, where the ACS update equaled one. The z-test for these areas would be applied to the difference in the rent and error measurement for 2006 compared with 2008 ACS, rather than a comparison of 2007 to 2008 ACS.

After all areas have been updated with a standard quality median rent change, local areas with estimates that reflect more than 200 one-year recent mover cases are evaluated further. If the updated rent is outside the confidence interval of the ACS recent mover estimate, the updated rent is replaced with the ACS recent mover rent estimate. In areas without 200 or more one-year ACS recent mover observations, but with 200 or more three-year ACS recent mover observations, the three year estimate [2] is used if it is statistically different from the updated 2008 rent based on the standard quality median rent change. This process creates a June 2008 rent.

C. Updates From 2008 to 2009

ACS 2008 data updates the June 2007 rents used in the FY 2010 FMRs forward by 12 months to June 2008. HUD uses six months of 2008 and 12 months of 2009 CPI rent and utilities price index data to update the June 2008 rents to the end of 2009. HUD uses local CPI data for FMR areas with at least 75 percent of their population within Class A metropolitan areas covered by local CPI data. HUD uses CPI data aggregated to Census regions for FMR areas in Class B and C size metropolitan areas and nonmetropolitan areas without local CPI update factors.

D. Updates From 2009 to 2011

HUD applies the national 1990 to 2000 average annual rent increase trend of 1.03 to end-of-2009 rents for 15 months, to derive the proposed FY 2011 FMRs. HUD will publish an additional **Federal Register** notice this fall requesting alternatives to the use of this long-term historical trend factor. HUD is considering alternatives for trend factors that include historical average annual trend factors based on shorter time periods and trends based on projections linked to other government forecasts.

The area-specific data and computations used to calculate proposed FY 2011 FMRs and FMR area definitions can be found at *http://www.huduser.org/datasets/fmr/fmrs/index.asp?data=fmr11.*

E. Large Bedroom Rents

HUD's principal FMR estimate is for two-bedroom units. This generally is the most common size of rental units, and therefore the most reliable to survey and analyze. After each decennial census, HUD calculates rent relationships between two-bedroom units and other unit sizes and uses these relationships to set FMRs for other units. This is done because it is much easier to update two-bedroom estimates and to use pre-established cost relationships with other bedroom sizes than it is to develop independent FMR estimates for each bedroom size. This was last done using 2000 Census data. A publicly releasable version of the data file used that permits derivations of rent ratios is available at *http://www.huduser.org/datasets/fmr/CensusRentData/index.html.* Rent ratio derivations are also shown in the FMR documentation system at *http://www.huduser.org/datasets/fmr/fmrs/index.asp?data=fmr11.*

The rents for three-bedroom and larger units continue to reflect HUD's policy to set higher rents for these units than would result from using normal market rents. This adjustment is intended to increase the likelihood that the largest families, who have the most difficulty in leasing units, will be successful in finding eligible program units. The adjustment adds bonuses of 8.7 percent to the unadjusted three-bedroom FMR estimates and adds 7.7 percent to the unadjusted four-bedroom FMR estimates. The FMRs for unit sizes larger than four bedrooms are calculated by adding 15 percent to the four-bedroom FMR for each extra bedroom. For example, the FMR for a five-bedroom unit is 1.15 times the four-bedroom FMR, and the FMR for a six-bedroom unit is 1.30 times the four-bedroom FMR. FMRs for single-room occupancy units are 0.75 times the zero-bedroom (efficiency) FMR.

A further adjustment was made using 2000 Census data in establishing rent ratios for areas with local bedroom-size intervals above or below what are considered to be reasonable ranges or where sample sizes are inadequate to accurately measure bedroom rent differentials. HUD's experience has shown that highly unusual bedroom ratios typically reflect inadequate sample sizes or peculiar local circumstances that HUD would not want to utilize in setting FMRs (*e.g.,* large numbers of luxury efficiency apartments that rent for more than typical one-bedroom units). Bedroom interval ranges were established based on an analysis of the range of such intervals for all areas with large enough samples to permit accurate bedroom ratio determinations. These ranges are: efficiency FMRs are constrained to fall between 0.65 and 0.83 of the two-bedroom FMR; one-bedroom FMRs must be between 0.76 and 0.90 of the two-bedroom FMR; three-bedroom FMRs must be between 1.10 and 1.34 of the two-bedroom FMR; and four-bedroom FMRs must be between 1.14 and 1.63 of the two-bedroom FMR. Bedroom rents for a given FMR area were then adjusted if the differentials between bedroom-size FMRs were inconsistent with normally observed patterns (i.e., efficiency rents were not allowed to be higher than one-bedroom rents and four-bedroom rents were not allowed to be lower than three-bedroom rents).

For low-population, nonmetropolitan counties with small census recent-mover rent samples, HUD uses census-defined county group data in determining rents for each bedroom size. This adjustment was made to protect against unrealistically high or

[2] The recent mover estimate from the three year data includes all those who moved in the most recent 24 month period. That means that no 2006 survey data are included in this three-year recent mover classification and the likelihood of having a valid (with 200 or more cases) three-year recent mover rent is lower for these estimates.

low FMRs due to insufficient sample sizes. The areas covered by this estimation method had less than the HUD standard of 200 two-bedroom census-tabulated observations.

V. Public Comments

A total of 16 public comments were received on the proposed FY 2011 FMRs. Seven of the comments filed concerned the 4.1 percent decline in FMRs for the Pittsburgh, PA HUD Metro FMR Area. According to the commenters, within the city there are high vacancy rates, high abandonment and condemnation rates and high percentages of substandard housing in the older, denser communities. A 2004 study of the city determined that 70 percent to 90 percent of the housing stock is considered below average in certain districts of the city, which is a major factor in the affordability of the City's housing market. The market for voucher holders is further constrained by refusal by landlords to accept vouchers and the changing nature of neighborhoods of choice. As a solution to this problem, it was suggested HUD institute a hold-harmless policy for FMRs; that is the FY 2011 FMRs should not be allowed to decline, but should be left at the higher level from FY 2010, at a minimum. It was also suggested that the FMR area be split into smaller areas to produce more accurate results. HUD will not institute a hold-harmless for Pittsburgh or any other FMR area. The FY 2011 FMR for the Pittsburgh, PA HUD Metro FMR Area is calculated using the most recent data available, based on local surveys from both the ACS and CPI. If smaller areas will help Public Housing Agencies (PHAs) operating the Housing Choice Voucher program within the city manage the program, these PHAs should consider applying for participation in HUD's small area FMR demonstration project. Information on the structure of the demonstration project and instructions for application will be announced in early 2011 by publication of a **Federal Register** notice.

A commenter in the Washington-Arlington-Alexandria, DC–VA–MD HUD Metro FMR Area also requested a hold harmless policy be instituted to prevent declines in FMRs. Even under the small area FMR demonstration project, FMRs will be allowed to decline from year to year. Small area FMRs used in the demonstration project will continue to include a rent floor (based on the state minimum as is currently in place); however, the methodology for calculating the current year metropolitan area rent has not been proposed to be changed from the current methodology.

There were several comments filed addressing the small area FMR demonstration project and much confusion about HUD's failure to respond to the comments filed with respect to the May 18, 2010 **Federal Register** notice (75 FR 27808). Comments on small area FMRs were received from the Montgomery County Housing Authority of Norristown, PA; the Public Housing Authorities Directors Association, and, in part, the National Association of Home Builders. Internally, all of the comments to the small area FMR demonstration project notice have been discussed and a notice with this discussion and decisions and further details on the program will be published in early 2011. Including a general discussion of the comments filed in response to the May 18, 2010 notice in this notice finalizing FY 2011 FMRs is likely to exacerbate the confusion. For this reason, the small area FMR methodology section is not included in this Notice, though it is unchanged from the proposed FY 2011 FMR publication for the Dallas, TX HUD Metro FMR Area, and may be accessed at *http://www.huduser.org/portal/datasets/fmr/fmr2011p/Preamble_FY2011P_FMRs.pdf.* One commenter noticed that the Small Area FMRs for Dallas did not incorporate the 10 dollar rounding protocol identified in the methodology and posted in the Web site. This has been corrected in this publication, so that the published Small Area FMRs that will be used for the voucher program in Dallas, TX HMFA beginning on October 1, 2010 show a 10 dollar rounding protocol instead of an earlier proposed 25 dollar protocol. These Small Area FMRs are provided in the Schedule B Addendum, which lists the FMRs by county and ZIP code. All PHAs operating in the Dallas must use these Small Area FMRs for the Housing Choice Voucher program. The area-wide FMRs for the Dallas, TX HMFA, listed in Schedule B, continue to be used for all other programs.

Another commenter questioned how the demonstration project could be considered voluntary, when it is not so for Dallas. While all other participation in the demonstration project will be voluntary and will not begin until early 2011 after discussion of all comments and further description of the program, the Dallas demonstration project and its timing reflects a court settlement between HUD and the Inclusive Communities Project, Inc. and the timing cannot be changed, nor can other aspects of the program. Therefore, the demonstration project being conducted in the Dallas, TX HUD Metropolitan FMR Area may differ in other ways (other than the start date) from what is decided for voluntary participants of the demonstration project.

The National Association of Housing and Redevelopment Officials (NAHRO) discusses eight issues in its comments to the FY 2011 FMRs, although most are reiterations of positions that NARO has expressed consistently since the publication of the FY 2006 FMRs. Foremost among those concerns is the use by HUD of metropolitan area definitions based on 2000 Census data as opposed to the area definitions from FY 2005 FMRs based on 1990 data. HUD modified the metropolitan area definitions based on rent and income relationships comparing old (FY 2005) FMR areas to new FMR areas, but NAHRO specifically opposes the inclusion of formerly nonmetropolitan counties into metropolitan areas. Under HUD's current methodology for calculating FMRs and median family income estimates, these non-metropolitan subareas would be given their own FMR and designated a HUD Metro FMR Area (HMFA) if either their rent or income was more than five percent different from the rent or income of the new area and there is sufficient Census data available to provide statistically reliable rent and income estimates. For the former nonmetropolitan counties that did not have enough data to make this comparison, HUD determined it could not dilute the FMR for the metropolitan area. Overall, HUD does not agree with the premise of the argument, that metropolitan FMR areas have been diluted by the change in the area definitions. Furthermore, NAHRO's argument does not allow for the growth and change of metropolitan areas over time. Moreover, unlike in past years where FMR base-year data was updated every 10 years with the decennial census, FMRs are updated with ACS data annually, and can be rebenchmarked using ACS data if enough recent mover observations exist for the area. ACS data is aggregated using the new area definitions. The fewer changes HUD has to these definitions, the more transparent the FMR calculation process, since it is not dependent on special tabulation of data.

The request by NAHRO to re-institute the 10 regional surveys of metropolitan and nonmetropolitan areas used for the Annual Adjustment Factors (AAFs) and the FMRs is also being denied. These 20 factors were based on longitudinal surveys from around FY 1996 to FY 2005. HUD determined, through analysis of 2000 Census data, that these

20 surveys did not improve estimates of rent changes, so HUD reverted to using CPI rent and utility surveys for the 4 Census regions. The CPI data provided better results while saving the Department the cost of the 20 surveys. Based on the analysis of the 2000 Census data, HUD concluded there was a valid statistical reason for the elimination of the 20 regional surveys. The regional AAFs are also based on the same data (CPI for rent and utilities—aggregated to the 4 Census Regions) that is used for the local AAFs.

NAHRO request that HUD publish the utility component of FMRs. HUD cannot do this because, as discussed in the methodology and emphasized here, HUD establishes FMRs based on gross rent data from the census. HUD does not collect utility data to update the FMRs. The base FMR and the ACS updates are generated using data collected on a gross rent basis. Only the CPI update is split between rent and utilities and this split, as discussed in the methodology, uses the percentage of those who pay for heat (again not utility data) to determine the percentage of utilities in the gross rent to apply the CPI utility index. HUD does not collect utility data and therefore cannot provide it.

Several of NAHRO's issues concern the adjustment for housing quality standards and suggestions for improvement of this determination for the FMRs. HUD is also concerned with adjustments for housing quality standards and will continue to evaluate this issue. At this time, however, no changes will be made.

NAHRO requests changes to the re-qualification process for 50th percentile FMRs including an automatic extension for areas that lose 50th percentile status and an unspecified change in the criteria used to evaluate the program. The automatic extension goes against the intent of the program, which is only available to a select number of areas, and any changes would require a rulemaking process. At this point HUD is focusing its efforts to expand opportunities to voucher holders through small area FMRs rather than changes to the 50th percentile FMR program.

The request for data to determine the median rent method (which HUD would not have to provide if the 2000 Census metropolitan area definitions were not modified since this data would be available through the Census Bureau's American Factfinder) has been available internally for some time. This is now posted on our Web site at *http://www.huduser.org/portal/datasets/fmr.html.*

NAHRO also comments on random digit dialing surveys (RDDs), in terms of the limited time to conduct them and the current methodology. HUD will accept RDDs conducted by areas and make revisions at any time during the fiscal year. Currently, HUD is conducting several RDDs and plans a revised Final FY2011 FMR notice following the completion of the surveys and processing of the data. Additionally, HUD is investigating ways of revising its survey methodology to include other less expensive ways to collect rent data, under a contract that will begin early next year. HUD's current survey methodology collects recent mover rents to determine if adjustments to FMRs are needed. The recent mover period has ranged from as little as 6 months to 24 months depending on the economic climate of the survey area. The fifteen-month designation for recent mover rents is the definition used in the decennial census. Under the ACS, however, the recent mover rent is a 24-month period and this is what is used most often in current RDD surveys. The current random digit dialing methodology collects enough recent-mover rents in an area to provide a statistically significant rent, which is generally 200 cases, though the results of the survey are compared to the current FMR to determine if a statistically significant difference exists. If so, the RDD survey result replaces the current FMR. Rents for stayers are also collected for purposes of comparison and further validity tests of the survey data.

A comment from Minot, ND states that this area continues to struggle with a very tight rental market, despite the increased FMRs provided from a RDD survey conducted by HUD last year. Rents continue to increase at a rapid rate. Another informal comment from Williams County, ND also shows significant rental increases. The causes of these increases are somewhat the same, and are attributed to increased jobs in oil and gas exploration, although in Minot, the Air Force base is also expanding, with estimated growth in personnel of 900 to 1,000. Small and rapidly changing markets, such as these, for which the ACS provides less timely data do require rent surveys, but it may be worthwhile for Minot to partner with Williams and other counties in the area to conduct a joint survey. Local agencies can conduct surveys at substantially less cost than HUD. Under HUD's current procedures, the timing of Minot's survey is crucial. Surveys are too expensive, even if conducted by small agencies, to be administered annually. The full extent of the expansion of the Air Force base cannot be measured until at least 6 months after it has occurred, and then the survey must limit the definition of recent movers as those moved in the past 6 months. HUD will contact Minot and Williams County to determine how and when to proceed with collecting updated rent information.

The Oklahoma City Housing Authority commented that the proposed increase in FMRs for the Oklahoma City, OK MSA is appropriate.

A comment filed by the National Association of Home Builders (NAHB) requested that HUD institute a floor to prevent any FY 2011 FMRs from declining by more than five percent, or else conduct RDD surveys of these areas. HUD considers it an inappropriate use of scarce resources to survey all areas that have FMR declines of more than 5 percent. In order to be effective, FMRs must follow the market, both up and down, in accordance with the most recent data available. HUD has attempted to mitigate the impact of annual changes, with the implementation of statistical significance testing for changes measured in annual ACS data, but HUD is committed to allowing changing market conditions to be reflected in the FMRs.

VI. Manufactured Home Space Surveys

The FMR used to establish payment standard amounts for the rental of manufactured home spaces in the Housing Choice Voucher program is 40 percent of the FMR for a two-bedroom unit. HUD will consider modification of the manufactured home space FMRs where public comments present statistically valid survey data showing the 40th percentile manufactured home space rent (including the cost of utilities) for the entire FMR area. For FY 2011, HUD received no comments or data concerning manufactured home space rents.

All approved exceptions to these rents that were in effect in FY 2010 were updated to FY 2011 using the same data used to estimate the Housing Choice Voucher program FMRs if the respective FMR area's definition remained the same. If the result of this computation was higher than 40 percent of the re-benchmarked two-bedroom rent, the exception remains and is listed in Schedule D. The FMR area definitions used for the rental of manufactured home spaces are the same as the area definitions used for the other FMRs. Areas with definitional changes that previously had exceptions to their manufactured housing space rental FMRs are requested to submit new

surveys to justify higher-than-standard space rental FMRs if they believe higher space rental allowances are needed.

VII. HUD Rental Housing Survey Guides

For the supporting data, HUD recommends the use of professionally conducted RDD telephone surveys to test the accuracy of FMRs for areas where there is a sufficient number of Section 8 units to justify the survey cost of approximately $35,000. Areas with 2,000 or more program units usually meet this cost criterion, and areas with fewer units may meet it if actual rents for two-bedroom units are significantly different from the FMRs proposed by HUD. In addition, HUD has developed a version of the RDD survey methodology for smaller, nonmetropolitan PHAs. This methodology is designed to be simple enough to be done by the PHA itself, rather than by professional survey organizations, at a cost of $5,000 or less.

PHAs in nonmetropolitan areas may, in certain circumstances, conduct surveys of groups of counties. HUD must approve all county-grouped surveys in advance. PHAs are cautioned that the resulting FMRs will not be identical for the counties surveyed. Each individual FMR area will have a separate FMR based on the relationship of rents in that area to the combined rents in the cluster of FMR areas. In addition, PHAs are advised that counties where FMRs are based on the combined rents in the cluster of FMR areas will not have their FMRs revised unless the grouped survey results show a revised FMR above the combined rent level.

PHAs that plan to use the RDD survey technique should obtain a copy of the appropriate survey guide. Larger PHAs should request HUD's survey guide entitled "Random Digit Dialing Surveys; A Guide to Assist Larger Public Housing Agencies in Preparing Fair Market Rent Comments." Smaller PHAs should obtain the guide entitled "Rental Housing Surveys: A Guide to Assist Smaller Public Housing Agencies in Preparing Fair Market Rent Comments." These guides, in Microsoft Word format, are available from HUD USER at HUD's Web site at the following address: *http://www.huduser.org/datasets/fmr.html.*

Other survey methodologies are acceptable in providing data to support comments, if the survey methodology can provide statistically reliable, unbiased estimates of the gross rent. Survey samples should preferably be randomly drawn from a complete list of rental units for the FMR area. If this is not feasible, the selected sample must be drawn to be statistically representative of the entire rental housing stock of the FMR area. Surveys must include units at all rent levels and be representative by structure type (including single-family, duplex, and other small rental properties), age of housing unit, and geographic location. The decennial census should be used as a means of verifying if a sample is representative of the FMR area's rental housing stock.

Most surveys of FMR areas cover only one- and two-bedroom units. If the survey is statistically acceptable, HUD will estimate FMRs for other bedroom sizes using ratios based on the decennial census. A PHA or contractor that cannot obtain the recommended number of sample responses after reasonable efforts should consult with HUD before abandoning its survey; in such situations, HUD may find it appropriate to relax normal sample size requirements.

HUD will consider increasing manufactured home space FMRs where public comment demonstrates that 40 percent of the two-bedroom FMR is not adequate. In order to be accepted as a basis for revising the manufactured home space FMRs, comments must include a pad rental survey of the mobile home parks in the area, identify the utilities included in each park's rental fee, and provide a copy of the applicable public housing authority's utility schedule.

VIII. Environmental Impact

This Notice involves the establishment of fair market rent schedules, which do not constitute a development decision affecting the physical condition of specific project areas or building sites. Accordingly, under 24 CFR 50.19(c)(6), this Notice is categorically excluded from environmental review under the National Environmental Policy Act of 1969 (42 U.S.C. 4321).

Accordingly, the Fair Market Rent Schedules, which will not be codified in 24 CFR part 888, are amended as follows:

Dated: September 24, 2010.

Raphael W. Bostic,

Assistant Secretary for Policy Development and Research.

Fair Market Rents for the Housing Choice Voucher Program

Schedules B and D—General Explanatory Notes

1. Geographic Coverage

a. *Metropolitan Areas*—FMRs are market-wide rent estimates that are intended to provide housing opportunities throughout the geographic area in which rental-housing units are in direct competition. The FY 2011 FMRs reflect a change in metropolitan area definitions. HUD is using the metropolitan Core Based Statistical Areas (CBSA), which are made up of one or more counties, as defined by the OMB, with some modifications. HUD is generally assigning separate FMRs to the component counties of CBSA Micropolitan Areas.

b. *Modifications to OMB Definitions*—Following OMB guidance, the estimation procedure for the FY 2011 FMRs incorporates the current OMB definitions of metropolitan areas based on the CBSA standards as implemented with 2000 Census data, but makes adjustments to the definitions to separate subparts of these areas where FMRs or median incomes would otherwise change significantly if the new area definitions were used without modification. In CBSAs where sub-areas are established, it is HUD's view that the geographic extent of the housing markets are not yet the same as the geographic extent of the CBSAs, but may become so in the future as the social and economic integration of the CBSA component areas increases. Modifications to metropolitan CBSA definitions are made according to a formula as described below.

Metropolitan area CBSAs (referred to as Metropolitan Statistical Areas or MSAs) may be modified to allow for sub-area FMRs within MSAs based on the boundaries of old FMR areas (OFAs) within the boundaries of new MSAs. (OFAs are the FMR areas defined for the FY2005 FMRs. Collectively, they include 1999 definition MSAs/PMSAs, metropolitan counties deleted from 1999 definition MSAs/PMSAs by HUD for FMR purposes, and counties and county parts outside of 1999 definition MSAs/PMSAs referred to as nonmetropolitan counties.) Sub-areas of MSAs are assigned their own FMRs when the sub-area 2000 Census Base Rent differs by at least 5 percent from the MSA 2000 Census Base Rent (*i.e.,* by at most 95 percent or at least 105 percent), or when the 2000 Census Median Family Income for the sub-area differs by at least 5 percent from the MSA 2000 Census Median Family Income. MSA sub-areas, and the remaining portions of MSAs after sub-areas have been determined, are referred to as HUD Metro FMR Areas (HMFAs) to distinguish these areas from OMB's official definition of MSAs.

The specific counties and New England towns and cities within each

state in MSAs and HMFAs are listed in Schedule B.

2. Bedroom Size Adjustments

Schedule B shows the FMRs for zero-bedroom through four-bedroom units. The FMRs for unit sizes larger than four bedrooms are calculated by adding 15 percent to the four-bedroom FMR for each extra bedroom. For example, the FMR for a five-bedroom unit is 1.15 times the four-bedroom FMR, and the FMR for a six-bedroom unit is 1.30 times the four-bedroom FMR. FMRs for single-room-occupancy (SRO) units are 0.75 times the zero-bedroom FMR.

3. Arrangement of FMR Areas and Identification of Constituent Parts

a. The FMR areas in Schedule B are listed alphabetically by metropolitan FMR area and by nonmetropolitan county within each state. The exception rents for manufactured home spaces FMRs are listed alphabetically in Schedule D.

b. The constituent counties (and New England towns and cities) included in each metropolitan FMR area are listed immediately following the listings of the FMR dollar amounts. All constituent parts of a metropolitan FMR area that are in more than one state can be identified by consulting the listings for each applicable state.

c. Two nonmetropolitan counties are listed alphabetically on each line of the nonmetropolitan county listings.

BILLING CODE 4210–67–P

SCHEDULE B - FY 2011 FINAL FAIR MARKET RENTS FOR EXISTING HOUSING PAGE 1

ALABAMA

METROPOLITAN FMR AREAS	0 BR	1 BR	2 BR	3 BR	4 BR	Counties of FMR AREA within STATE
Anniston-Oxford, AL MSA	426	471	585	773	909	Calhoun
Auburn-Opelika, AL MSA	421	502	647	851	874	Lee
Birmingham-Hoover, AL HMFA	634	705	786	997	1027	Bibb, Blount, Jefferson, St. Clair, Shelby
Chilton County, AL HMFA	398	550	612	769	881	Chilton
Columbus, GA-AL MSA	544	573	656	872	1033	Russell
Decatur, AL MSA	466	523	602	787	817	Lawrence, Morgan
Dothan, AL HMFA	414	487	552	705	806	Geneva, Houston
Florence-Muscle Shoals, AL MSA	490	493	598	762	945	Colbert, Lauderdale
Gadsden, AL MSA	386	488	593	760	785	Etowah
Henry County, AL HMFA	350	482	536	641	660	Henry
Huntsville, AL MSA	517	563	665	910	999	Limestone, Madison
Mobile, AL MSA	579	619	699	916	1081	Mobile
Montgomery, AL MSA	552	653	735	975	1287	Autauga, Elmore, Lowndes, Montgomery
Tuscaloosa, AL MSA	482	557	722	928	957	Greene, Hale, Tuscaloosa
Walker County, AL HMFA	496	497	596	744	813	Walker

NONMETROPOLITAN COUNTIES	0 BR	1 BR	2 BR	3 BR	4 BR	NONMETROPOLITAN COUNTIES	0 BR	1 BR	2 BR	3 BR	4 BR
Baldwin	534	643	764	1013	1160	Barbour	448	449	539	667	687
Bullock	397	449	550	659	710	Butler	397	449	550	659	710
Chambers	445	483	536	727	750	Cherokee	464	465	560	667	688
Choctaw	444	469	536	680	908	Clarke	348	481	536	642	942
Clay	446	448	536	662	825	Cleburne	450	451	541	663	825
Coffee	426	487	551	754	967	Conecuh	444	469	536	680	908
Coosa	435	481	536	726	815	Covington	446	447	536	731	754
Crenshaw	397	449	550	659	710	Cullman	464	478	560	753	774
Dale	414	478	536	774	939	Dallas	355	493	547	690	740
DeKalb	400	425	536	713	733	Escambia	445	451	536	668	822
Fayette	352	407	536	781	943	Franklin	349	452	536	723	941
Jackson	445	482	536	683	941	Lamar	359	445	536	716	940
Macon	397	428	551	735	759	Marengo	445	473	536	694	713
Marion	348	407	536	681	942	Marshall	472	506	571	771	849
Monroe	445	483	536	742	820	Perry	445	473	536	694	713
Pickens	359	445	536	716	940	Pike	427	460	536	688	710
Randolph	446	448	536	662	825	Sumter	359	458	536	716	940
Talladega	454	455	545	735	961	Tallapoosa	429	439	538	759	881
Washington	444	469	536	680	908	Wilcox	444	469	536	680	908
Winston	358	407	536	642	660						

ALASKA

METROPOLITAN FMR AREAS	0 BR	1 BR	2 BR	3 BR	4 BR	Counties of FMR AREA within STATE
Anchorage, AK HMFA	726	826	1036	1492	1817	Anchorage
Fairbanks, AK MSA	635	764	977	1415	1494	Fairbanks North Star
Matanuska-Susitna Borough, AK HMFA	663	772	985	1401	1701	Matanuska-Susitna

SCHEDULE B - FY 2011 FINAL FAIR MARKET RENTS FOR EXISTING HOUSING PAGE 2

ALASKA continued

NONMETROPOLITAN COUNTIES	0 BR	1 BR	2 BR	3 BR	4 BR	NONMETROPOLITAN COUNTIES	0 BR	1 BR	2 BR	3 BR	4 BR
Aleutians East	793	902	1143	1413	1456	Aleutians West	793	902	1143	1413	1456
Bethel	909	1138	1381	1652	2425	Bristol Bay	793	902	1143	1413	1456
Denali	668	824	1029	1445	1627	Dillingham	793	902	1143	1413	1456
Haines	668	824	1029	1445	1627	Hoonah-Angoon	793	902	1143	1413	1456
Juneau	809	991	1247	1685	2100	Kenai Peninsula	598	684	832	1140	1461
Ketchikan Gateway	713	910	1094	1594	1921	Kodiak Island	765	895	1178	1693	1792
Lake and Peninsula	793	902	1143	1413	1456	Nome	795	1022	1173	1416	1458
North Slope	818	957	1257	1503	1547	Northwest Arctic	793	902	1143	1413	1456
Petersburg	793	902	1143	1413	1456	Prince of Wales-Hyder	793	902	1143	1413	1456
Sitka	759	875	1044	1521	1832	Skagway	793	902	1143	1413	1456
Southeast Fairbanks	668	824	1029	1445	1627	Valdez-Cordova	668	824	1029	1445	1627
Wade Hampton	793	902	1143	1413	1456	Wrangell	793	902	1143	1413	1456
Yakutat	793	902	1143	1413	1456	Yukon-Koyukuk	793	902	1143	1413	1456

ARIZONA

METROPOLITAN FMR AREAS	0 BR	1 BR	2 BR	3 BR	4 BR	Counties of FMR AREA within STATE
Flagstaff, AZ MSA	845	1005	1136	1461	1843	Coconino
Lake Havasu City-Kingman, AZ MSA	633	697	812	1123	1253	Mohave
Phoenix-Mesa-Glendale, AZ MSA	666	776	936	1363	1596	Maricopa, Pinal
Prescott, AZ MSA	705	728	919	1339	1379	Yavapai
Tucson, AZ MSA	562	661	848	1221	1291	Pima
Yuma, AZ MSA	592	699	835	1184	1451	Yuma

NONMETROPOLITAN COUNTIES	0 BR	1 BR	2 BR	3 BR	4 BR	NONMETROPOLITAN COUNTIES	0 BR	1 BR	2 BR	3 BR	4 BR
Apache	447	547	647	897	1137	Cochise	524	607	762	1052	1293
Gila	571	669	880	1208	1244	Graham	594	640	717	991	1140
Greenlee	543	603	757	1040	1177	La Paz	609	610	732	1036	1067
Navajo	532	569	751	1012	1199	Santa Cruz	626	626	794	1158	1192

ARKANSAS

METROPOLITAN FMR AREAS	0 BR	1 BR	2 BR	3 BR	4 BR	Counties of FMR AREA within STATE
Fayetteville-Springdale-Rogers, AR HMFA	482	508	635	925	951	Benton, Madison, Washington
Fort Smith, AR-OK HMFA	399	453	564	751	818	Crawford, Sebastian
Franklin County, AR HMFA	349	456	536	679	829	Franklin
Grant County, AR HMFA	455	468	572	828	853	Grant
Hot Springs, AR MSA	419	519	646	806	831	Garland
Jonesboro, AR HMFA	488	509	587	826	851	Craighead
Little Rock-North Little Rock-Conway, AR HMFA	566	643	717	960	991	Faulkner, Lonoke, Perry, Pulaski, Saline
Memphis, TN-MS-AR HMFA	628	682	758	1010	1041	Crittenden
Pine Bluff, AR MSA	415	492	616	739	877	Cleveland, Jefferson, Lincoln
Poinsett County, AR HMFA	348	451	536	713	854	Poinsett
Texarkana, TX-Texarkana, AR MSA	510	515	634	773	841	Miller

SCHEDULE B - FY 2011 FINAL FAIR MARKET RENTS FOR EXISTING HOUSING PAGE 3

ARKANSAS continued

NONMETROPOLITAN COUNTIES	0 BR	1 BR	2 BR	3 BR	4 BR
Arkansas	409	431	536	778	800
Baxter	411	477	577	775	978
Bradley	399	405	536	665	704
Carroll	470	471	565	712	992
Clark	427	433	557	718	740
Cleburne	486	487	584	801	1028
Conway	445	459	536	738	803
Dallas	347	481	536	683	869
Drew	384	493	592	744	1038
Greene	347	484	536	784	807
Hot Spring	446	448	536	703	725
Independence	373	444	536	693	753
Jackson	361	473	536	756	780
Lafayette	423	484	556	665	795
Lee	381	430	536	714	830
Logan	348	450	536	766	858
Mississippi	377	421	551	727	877
Montgomery	415	483	608	764	787
Newton	447	448	538	695	780
Phillips	444	448	536	698	720
Polk	445	483	536	697	847
Prairie	446	447	536	672	693
St. Francis	454	471	550	776	964
Searcy	447	448	538	695	780
Sharp	446	447	536	683	705
Union	458	482	551	714	927
White	460	461	554	752	774
Yell	443	467	536	735	758

NONMETROPOLITAN COUNTIES	0 BR	1 BR	2 BR	3 BR	4 BR
Ashley	417	431	566	678	746
Boone	452	453	545	698	784
Calhoun	347	481	536	683	869
Chicot	399	405	536	665	704
Clay	431	434	536	687	731
Columbia	352	452	541	664	760
Cross	448	450	540	787	860
Desha	399	405	536	682	704
Fulton	427	428	536	704	786
Hempstead	420	470	550	659	757
Howard	410	475	536	690	713
Izard	427	428	536	704	786
Johnson	347	477	536	714	854
Lawrence	349	428	536	659	872
Little River	423	484	556	678	795
Marion	445	446	536	705	777
Monroe	446	447	536	672	693
Nevada	423	484	556	665	795
Ouachita	347	482	536	738	865
Pike	423	484	556	665	795
Pope	402	432	559	788	810
Randolph	348	436	536	641	940
Scott	445	447	536	741	940
Sevier	447	462	536	741	858
Stone	427	428	536	704	786
Van Buren	348	407	536	664	857
Woodruff	446	447	536	672	693

CALIFORNIA

METROPOLITAN FMR AREAS	0 BR	1 BR	2 BR	3 BR	4 BR	Counties of FMR AREA within STATE
Bakersfield-Delano, CA MSA	614	662	789	1140	1367	Kern
Chico, CA MSA	609	725	874	1232	1471	Butte
El Centro, CA MSA	622	703	867	1193	1520	Imperial
Fresno, CA MSA	657	724	855	1244	1340	Fresno
Hanford-Corcoran, CA MSA	655	697	810	1181	1423	Kings
Los Angeles-Long Beach, CA HMFA	973	1173	1465	1967	2367	Los Angeles
Madera-Chowchilla, CA MSA	659	691	882	1282	1322	Madera
Merced, CA MSA	591	674	819	1168	1364	Merced
Modesto, CA MSA	696	768	905	1298	1499	Stanislaus
Napa, CA MSA	969	1086	1410	1950	2215	Napa
Oakland-Fremont, CA HMFA	974	1176	1393	1889	2339	Alameda, Contra Costa
Orange County, CA HMFA	1175	1327	1584	2241	2580	Orange

SCHEDULE B - FY 2011 FINAL FAIR MARKET RENTS FOR EXISTING HOUSING PAGE 4

CALIFORNIA continued

METROPOLITAN FMR AREAS	0 BR	1 BR	2 BR	3 BR	4 BR	Counties of FMR AREA within STATE
Oxnard-Thousand Oaks-Ventura, CA MSA	1087	1200	1527	2188	2503	Ventura
Redding, CA MSA	599	698	849	1239	1493	Shasta
Riverside-San Bernardino-Ontario, CA MSA	882	970	1144	1610	1877	Riverside, San Bernardino
Sacramento--Arden-Arcade--Roseville, CA HMFA	757	861	1050	1515	1737	El Dorado, Placer, Sacramento
Salinas, CA MSA	845	951	1092	1543	1616	Monterey
San Benito County, CA HMFA	847	1147	1276	1808	2238	San Benito
San Diego-Carlsbad-San Marcos, CA MSA	1004	1149	1406	1999	2470	San Diego
San Francisco, CA HMFA	1191	1465	1833	2447	2586	Marin, San Francisco, San Mateo
San Jose-Sunnyvale-Santa Clara, CA HMFA	1222	1416	1702	2447	2694	Santa Clara
San Luis Obispo-Paso Robles, CA MSA	826	977	1190	1734	1784	San Luis Obispo
Santa Barbara-Santa Maria-Goleta, CA MSA	978	1091	1225	1613	1841	Santa Barbara
Santa Cruz-Watsonville, CA MSA	1125	1327	1730	2489	2566	Santa Cruz
Santa Rosa-Petaluma, CA MSA	842	1024	1293	1835	2145	Sonoma
Stockton, CA MSA	656	748	922	1266	1594	San Joaquin
Vallejo-Fairfield, CA MSA	1023	1101	1263	1771	2181	Solano
Visalia-Porterville, CA MSA	541	605	703	1005	1033	Tulare
Yolo, CA HMFA	821	869	1062	1547	1646	Yolo
Yuba City, CA MSA	564	636	782	1138	1218	Sutter, Yuba

NONMETROPOLITAN COUNTIES	0 BR	1 BR	2 BR	3 BR	4 BR	NONMETROPOLITAN COUNTIES	0 BR	1 BR	2 BR	3 BR	4 BR
Alpine	658	738	941	1342	1381	Amador	710	833	1093	1588	1636
Calaveras	725	726	873	1273	1404	Colusa	660	663	862	1113	1513
Del Norte	648	656	849	1236	1274	Glenn	566	581	764	994	1021
Humboldt	602	705	927	1329	1472	Inyo	596	624	812	1183	1395
Lake	595	697	908	1316	1465	Lassen	577	677	889	1293	1332
Mariposa	658	738	941	1342	1381	Mendocino	663	818	994	1357	1743
Modoc	572	632	827	1178	1223	Mono	775	934	1193	1634	2096
Nevada	745	870	1146	1655	2014	Plumas	590	691	910	1328	1598
Sierra	696	812	1071	1518	1879	Siskiyou	514	617	789	1123	1157
Tehama	538	611	798	1159	1393	Trinity	583	612	803	1102	1222
Tuolumne	640	761	983	1359	1400						

COLORADO

METROPOLITAN FMR AREAS	0 BR	1 BR	2 BR	3 BR	4 BR	Counties of FMR AREA within STATE
Boulder, CO MSA	758	878	1102	1607	1926	Boulder
Colorado Springs, CO HMFA	546	612	773	1103	1305	El Paso
*Denver-Aurora-Broomfield, CO MSA	698	796	1007	1430	1667	Adams, Arapahoe, Broomfield, Clear Creek, Denver, Douglas, Elbert, Gilpin, Jefferson, Park
Fort Collins-Loveland, CO MSA	584	700	849	1236	1441	Larimer
Grand Junction, CO MSA	594	596	715	1041	1258	Mesa
Greeley, CO MSA	550	583	713	1040	1227	Weld
Pueblo, CO MSA	500	527	692	907	1026	Pueblo
Teller County, CO HMFA	560	654	861	1254	1510	Teller

SCHEDULE B - FY 2011 FINAL FAIR MARKET RENTS FOR EXISTING HOUSING PAGE 5

COLORADO continued

NONMETROPOLITAN COUNTIES	0 BR	1 BR	2 BR	3 BR	4 BR
Alamosa	434	537	596	810	1047
Baca	456	535	596	849	916
Chaffee	445	561	683	995	1025
Conejos	456	535	596	849	916
Crowley	474	490	596	781	960
Delta	523	534	629	863	889
Eagle	885	1034	1360	1711	2336
Garfield	907	1033	1145	1413	1455
Gunnison	549	603	784	1085	1377
Huerfano	456	535	596	849	916
Kiowa	474	490	596	781	960
Lake	669	844	1019	1269	1788
Las Animas	405	538	596	768	793
Logan	467	468	596	776	898
Moffat	545	595	747	979	1312
Montrose	450	590	684	908	1125
Otero	465	491	596	825	850
Phillips	474	490	596	781	960
Prowers	457	536	596	808	1048
Rio Grande	457	535	596	865	918
Saguache	456	535	596	849	916
San Miguel	720	865	1105	1611	1660
Summit	774	910	1189	1693	2087
Yuma	474	490	596	781	960

NONMETROPOLITAN COUNTIES	0 BR	1 BR	2 BR	3 BR	4 BR
Archuleta	534	628	790	961	1240
Bent	474	490	596	781	960
Cheyenne	474	490	596	781	960
Costilla	456	535	596	849	916
Custer	475	556	732	1025	1179
Dolores	534	626	724	959	1237
Fremont	423	506	649	931	1068
Grand	531	606	770	1120	1154
Hinsdale	669	844	1019	1269	1788
Jackson	595	687	763	984	1187
Kit Carson	474	490	596	781	960
La Plata	586	715	818	1148	1306
Lincoln	474	490	596	781	960
Mineral	669	844	1019	1269	1788
Montezuma	468	547	632	755	1008
Morgan	508	550	613	817	986
Ouray	669	844	1019	1269	1788
Pitkin	935	1093	1438	1997	2525
Rio Blanco	595	687	763	984	1187
Routt	690	816	1061	1269	1863
San Juan	534	626	724	959	1237
Sedgwick	474	490	596	781	960
Washington	474	490	596	781	960

CONNECTICUT

METROPOLITAN FMR AREAS	0 BR	1 BR	2 BR	3 BR	4 BR	Components of FMR AREA within STATE
Bridgeport, CT HMFA	838	1083	1291	1543	1873	Fairfield County towns of Bridgeport town, Easton town, Fairfield town, Monroe town, Shelton town, Stratford town, Trumbull town
Colchester-Lebanon, CT HMFA	733	860	1129	1350	1393	New London County towns of Colchester town, Lebanon town
Danbury, CT HMFA	1039	1262	1601	1916	2376	Fairfield County towns of Bethel town, Brookfield town, Danbury town, New Fairfield town, Newtown town, Redding town, Ridgefield town, Sherman town
*Hartford-West Hartford-East Hartford, CT HMFA	760	910	1113	1337	1659	Hartford County towns of Avon town, Berlin town, Bloomfield town, Bristol town, Burlington town, Canton town, East Granby town, East Hartford town, East Windsor town, Enfield town, Farmington town, Glastonbury town, Granby town, Hartford town, Hartland town, Manchester town, Marlborough town, New Britain town, Newington town, Plainville town, Rocky Hill town, Simsbury town, Southington town, South Windsor town, Suffield town, West Hartford town, Wethersfield town, Windsor town, Windsor Locks town

SCHEDULE B - FY 2011 FINAL FAIR MARKET RENTS FOR EXISTING HOUSING PAGE 6

CONNECTICUT continued

METROPOLITAN FMR AREAS	0 BR	1 BR	2 BR	3 BR	4 BR	Components of FMR AREA within STATE
						Middlesex County towns of Chester town, Cromwell town, Durham town, East Haddam town, East Hampton town, Haddam town, Middlefield town, Middletown town, Portland town Tolland County towns of Andover town, Bolton town, Columbia town, Coventry town, Ellington town, Hebron town, Mansfield town, Somers town, Stafford town, Tolland town, Union town, Vernon town, Willington town
Milford-Ansonia-Seymour, CT HMFA	913	1058	1184	1507	1655	New Haven County towns of Ansonia town, Beacon Falls town, Derby town, Milford town, Oxford town, Seymour town
*New Haven-Meriden, CT HMFA	910	1032	1246	1491	1705	New Haven County towns of Bethany town, Branford town, Cheshire town, East Haven town, Guilford town, Hamden town, Madison town, Meriden town, New Haven town, North Branford town, North Haven town, Orange town, Wallingford town, West Haven town, Woodbridge town
Norwich-New London, CT HMFA	733	870	1007	1233	1361	New London County towns of Bozrah town, East Lyme town, Franklin town, Griswold town, Groton town, Ledyard town, Lisbon town, Lyme town, Montville town, New London town, North Stonington town, Norwich town, Old Lyme town, Preston town, Salem town, Sprague town, Stonington town, Voluntown town, Waterford town
Southern Middlesex County, CT HMFA	862	908	1155	1482	1690	Middlesex County towns of Clinton town, Deep River town, Essex town, Killingworth town, Old Saybrook town, Westbrook town
Stamford-Norwalk, CT HMFA	1190	1449	1811	2360	2851	Fairfield County towns of Darien town, Greenwich town, New Canaan town, Norwalk town, Stamford town, Weston town, Westport town, Wilton town
Waterbury, CT HMFA	618	800	951	1138	1185	New Haven County towns of Middlebury town, Naugatuck town, Prospect town, Southbury town, Waterbury town, Wolcott town

NONMETROPOLITAN COUNTIES	0 BR	1 BR	2 BR	3 BR	4 BR	Towns within nonmetropolitan counties
Litchfield County, CT	662	862	1018	1307	1470	Barkhamsted town, Bethlehem town, Bridgewater town, Canaan town, Colebrook town, Cornwall town, Goshen town, Harwinton town, Kent town, Litchfield town, Morris town, New Hartford town, New Milford town, Norfolk town, North Canaan town, Plymouth town, Roxbury town, Salisbury town, Sharon town, Thomaston town, Torrington town, Warren town, Washington town, Watertown town, Winchester town, Woodbury town
Windham County, CT	611	740	891	1121	1189	Ashford town, Brooklyn town, Canterbury town, Chaplin town, Eastford town, Hampton town, Killingly town, Plainfield town, Pomfret town, Putnam town, Scotland town, Sterling town, Thompson town, Windham town, Woodstock town

DELAWARE

METROPOLITAN FMR AREAS	0 BR	1 BR	2 BR	3 BR	4 BR	Counties of FMR AREA within STATE
Dover, DE MSA	674	733	812	1062	1426	Kent

SCHEDULE B - FY 2011 FINAL FAIR MARKET RENTS FOR EXISTING HOUSING PAGE 7

DELAWARE continued

METROPOLITAN FMR AREAS	0 BR	1 BR	2 BR	3 BR	4 BR	Counties of FMR AREA within STATE
*Philadelphia-Camden-Wilmington, PA-NJ-DE-MD MSA..	789	900	1077	1317	1589	New Castle

NONMETROPOLITAN COUNTIES	0 BR	1 BR	2 BR	3 BR	4 BR
Sussex	620	675	750	1026	1056

DISTRICT OF COLUMBIA

METROPOLITAN FMR AREAS	0 BR	1 BR	2 BR	3 BR	4 BR	Counties of FMR AREA within STATE
*Washington-Arlington-Alexandria, DC-VA-MD HMFA...	1131	1289	1461	1885	2466	District of Columbia

FLORIDA

METROPOLITAN FMR AREAS	0 BR	1 BR	2 BR	3 BR	4 BR	Counties of FMR AREA within STATE
Baker County, FL HMFA	387	536	596	871	895	Baker
Cape Coral-Fort Myers, FL MSA	810	874	996	1354	1393	Lee
Crestview-Fort Walton Beach-Destin, FL MSA	648	759	854	1246	1368	Okaloosa
Deltona-Daytona Beach-Ormond Beach, FL MSA	645	754	938	1213	1248	Volusia
*Fort Lauderdale, FL HMFA	956	1069	1285	1777	2256	Broward
Gainesville, FL MSA	656	723	824	1205	1242	Alachua, Gilchrist
Jacksonville, FL HMFA	685	779	907	1138	1304	Clay, Duval, Nassau, St. Johns
Lakeland-Winter Haven, FL MSA	674	744	857	1087	1275	Polk
Miami-Miami Beach-Kendall, FL HMFA	862	976	1184	1514	1770	Miami-Dade
Naples-Marco Island, FL MSA	909	1042	1173	1458	1518	Collier
*North Port-Bradenton-Sarasota, FL MSA	843	923	1111	1419	1559	Manatee, Sarasota
Ocala, FL MSA	648	667	783	1028	1059	Marion
Orlando-Kissimmee-Sanford, FL MSA	795	865	988	1237	1456	Lake, Orange, Osceola, Seminole
Palm Bay-Melbourne-Titusville, FL MSA	629	770	907	1222	1362	Brevard
Palm Coast, FL MSA	692	798	1004	1406	1499	Flagler
Panama City-Lynn Haven-Panama City Beach, FL MSA..	668	705	807	1114	1240	Bay
Pensacola-Ferry Pass-Brent, FL MSA	654	712	790	1145	1385	Escambia, Santa Rosa
Port St. Lucie, FL MSA	754	756	958	1266	1305	Martin, St. Lucie
Punta Gorda, FL MSA	676	708	918	1340	1613	Charlotte
Sebastian-Vero Beach, FL MSA	621	750	956	1190	1225	Indian River
Tallahassee, FL HMFA	680	756	933	1245	1281	Gadsden, Jefferson, Leon
Tampa-St. Petersburg-Clearwater, FL MSA	714	792	958	1214	1466	Hernando, Hillsborough, Pasco, Pinellas
Wakulla County, FL HMFA	639	694	772	1015	1047	Wakulla
*West Palm Beach-Boca Raton, FL HMFA	944	1106	1306	1847	1903	Palm Beach

NONMETROPOLITAN COUNTIES	0 BR	1 BR	2 BR	3 BR	4 BR	NONMETROPOLITAN COUNTIES	0 BR	1 BR	2 BR	3 BR	4 BR
Bradford	418	580	643	797	822	Calhoun	539	540	647	815	930
Citrus	577	627	694	1007	1212	Columbia	503	581	687	857	1205
DeSoto	567	580	682	822	846	Dixie	492	537	596	744	830
Franklin	538	540	647	815	927	Glades	596	635	722	882	941
Gulf	539	540	647	815	930	Hamilton	492	537	596	744	830
Hardee	567	615	682	837	860	Hendry	542	648	722	868	1071

SCHEDULE B - FY 2011 FINAL FAIR MARKET RENTS FOR EXISTING HOUSING PAGE 8

FLORIDA continued

NONMETROPOLITAN COUNTIES	0 BR	1 BR	2 BR	3 BR	4 BR	NONMETROPOLITAN COUNTIES	0 BR	1 BR	2 BR	3 BR	4 BR
Highlands	612	615	736	952	1138	Holmes	514	546	620	807	847
Jackson	417	535	596	738	861	Lafayette	492	537	596	744	830
Levy	501	537	604	771	794	Liberty	539	540	647	815	930
Madison	539	540	647	815	930	Monroe	900	1096	1350	1964	2103
Okeechobee	609	631	734	989	1018	Putnam	510	553	614	737	759
Sumter	493	536	596	783	1047	Suwannee	395	538	596	751	823
Taylor	548	594	661	791	812	Union	501	576	647	856	883
Walton	603	621	727	899	925	Washington	397	451	596	854	879

GEORGIA

METROPOLITAN FMR AREAS	0 BR	1 BR	2 BR	3 BR	4 BR	Counties of FMR AREA within STATE
Albany, GA MSA	509	544	638	856	884	Baker, Dougherty, Lee, Terrell, Worth
Athens-Clarke County, GA MSA	545	606	760	1012	1044	Clarke, Madison, Oconee, Oglethorpe
Atlanta-Sandy Springs-Marietta, GA HMFA	731	792	881	1072	1170	Barrow, Bartow, Carroll, Cherokee, Clayton, Cobb, Coweta, Dawson, DeKalb, Douglas, Fayette, Forsyth, Fulton, Gwinnett, Heard, Henry, Jasper, Newton, Paulding, Pickens, Pike, Rockdale, Spalding, Walton
Augusta-Richmond County, GA-SC MSA	516	560	629	842	886	Burke, Columbia, McDuffie, Richmond
Brunswick, GA MSA	511	555	616	878	1082	Brantley, Glynn, McIntosh
Butts County, GA HMFA	406	543	627	915	1089	Butts
Chattanooga, TN-GA MSA	577	610	718	884	1039	Catoosa, Dade, Walker
Columbus, GA-AL MSA	544	573	656	872	1033	Chattahoochee, Harris, Marion, Muscogee
Dalton, GA HMFA	521	566	626	774	798	Whitfield
Gainesville, GA MSA	711	746	860	1056	1225	Hall
Haralson County, GA HMFA	451	473	542	789	956	Haralson
Hinesville-Fort Stewart, GA HMFA	515	559	623	877	997	Liberty
Lamar County, GA HMFA	475	477	572	754	1004	Lamar
Long County, GA HMFA	460	499	555	760	784	Long
Macon, GA MSA	536	581	646	797	830	Bibb, Crawford, Jones, Twiggs
Meriwether County, GA HMFA	465	471	561	677	697	Meriwether
Monroe County, GA HMFA	516	561	622	745	770	Monroe
Murray County, GA HMFA	488	527	587	702	723	Murray
Rome, GA MSA	492	501	647	794	820	Floyd
Savannah, GA MSA	668	723	805	1068	1103	Bryan, Chatham, Effingham
Valdosta, GA MSA	526	527	634	860	886	Brooks, Echols, Lanier, Lowndes
Warner Robins, GA MSA	582	593	704	1022	1175	Houston

NONMETROPOLITAN COUNTIES	0 BR	1 BR	2 BR	3 BR	4 BR	NONMETROPOLITAN COUNTIES	0 BR	1 BR	2 BR	3 BR	4 BR
Appling	449	488	542	661	681	Atkinson	450	470	542	691	786
Bacon	450	470	542	691	786	Baldwin	423	509	632	755	778
Banks	469	508	563	684	972	Ben Hill	356	458	547	662	680
Berrien	444	446	542	672	692	Bleckley	380	444	542	671	769
Bulloch	499	517	612	734	754	Calhoun	450	488	542	695	854
Camden	556	558	672	978	1179	Candler	449	488	542	661	681
Charlton	450	470	542	691	786	Chattooga	353	432	542	650	946

SCHEDULE B - FY 2011 FINAL FAIR MARKET RENTS FOR EXISTING HOUSING PAGE 9

GEORGIA continued

NONMETROPOLITAN COUNTIES	0 BR	1 BR	2 BR	3 BR	4 BR
Clay	450	488	542	695	854
Coffee	449	464	542	675	825
Cook	450	460	542	737	953
Decatur	402	467	615	736	817
Dooly	450	466	542	683	922
Elbert	450	470	542	681	702
Evans	449	488	542	661	681
Franklin	469	508	563	684	972
Glascock	389	411	542	649	762
Grady	352	487	542	751	777
Habersham	534	537	643	770	1128
Hart	450	488	542	647	950
Jackson	558	606	674	819	1069
Jefferson	389	433	542	649	762
Johnson	408	500	557	720	751
Lincoln	450	470	542	681	702
Macon	450	466	542	683	922
Mitchell	353	448	542	650	902
Morgan	487	488	602	721	742
Pierce	450	470	542	691	786
Pulaski	411	480	542	789	828
Quitman	450	488	542	695	854
Randolph	450	488	542	695	854
Screven	389	411	542	649	762
Stephens	361	502	557	667	688
Sumter	424	476	585	700	1028
Taliaferro	450	470	542	681	702
Taylor	450	466	542	683	922
Thomas	497	539	599	769	1051
Toombs	352	488	542	755	836
Treutlen	411	480	542	725	829
Turner	450	477	542	687	838
Upson	382	517	588	703	724
Warren	450	470	542	681	702
Wayne	388	439	542	715	951
Wheeler	411	480	542	725	829
Wilcox	411	480	542	725	829
Wilkinson	408	500	557	720	751

NONMETROPOLITAN COUNTIES	0 BR	1 BR	2 BR	3 BR	4 BR
Clinch	450	470	542	691	786
Colquitt	451	487	542	649	816
Crisp	450	454	542	685	706
Dodge	428	429	542	725	746
Early	450	488	542	695	854
Emanuel	354	411	542	661	844
Fannin	367	510	565	676	811
Gilmer	531	575	641	845	1021
Gordon	531	535	687	822	848
Greene	450	470	542	681	702
Hancock	450	470	542	681	702
Irwin	450	477	542	687	838
Jeff Davis	449	488	542	661	681
Jenkins	389	411	542	649	762
Laurens	450	489	542	728	883
Lumpkin	475	617	733	990	1097
Miller	418	486	542	679	809
Montgomery	411	480	542	725	829
Peach	490	492	593	849	892
Polk	444	494	603	743	768
Putnam	409	413	542	788	810
Rabun	533	553	642	828	998
Schley	450	466	542	683	922
Seminole	418	486	542	679	809
Stewart	450	488	542	695	854
Talbot	519	520	627	772	795
Tattnall	451	487	542	715	782
Telfair	411	480	542	725	829
Tift	472	512	567	724	837
Towns	533	553	642	824	998
Troup	519	525	658	832	859
Union	533	553	642	824	998
Ware	449	485	542	694	728
Washington	389	446	542	662	762
Webster	450	466	542	683	922
White	474	591	657	829	998
Wilkes	450	470	542	681	702

HAWAII

METROPOLITAN FMR AREAS	0 BR	1 BR	2 BR	3 BR	4 BR	Counties of FMR AREA within STATE
Honolulu, HI MSA	1190	1396	1702	2470	2764	Honolulu

HAWAII continued

NONMETROPOLITAN COUNTIES	0 BR	1 BR	2 BR	3 BR	4 BR
Hawaii	850	1020	1145	1614	1769
Kauai	980	1104	1454	1825	1986
Kalawao	1021	1177	1383	1748	1990
Maui	1255	1391	1617	2164	2317

IDAHO

METROPOLITAN FMR AREAS	0 BR	1 BR	2 BR	3 BR	4 BR	Counties of FMR AREA within STATE
Boise City-Nampa, ID HMFA	502	595	702	1021	1085	Ada, Boise, Canyon, Owyhee
Coeur d'Alene, ID MSA	570	615	740	1076	1203	Kootenai
Gem County, ID HMFA	505	612	680	989	1017	Gem
Idaho Falls, ID MSA	484	510	651	893	1120	Bonneville, Jefferson
Lewiston, ID-WA MSA	504	523	655	930	1133	Nez Perce
Logan, UT-ID MSA	502	542	677	908	1121	Franklin
Pocatello, ID MSA	416	484	624	902	1057	Bannock, Power

NONMETROPOLITAN COUNTIES	0 BR	1 BR	2 BR	3 BR	4 BR
Adams	487	507	639	865	1031
Benewah	559	569	715	1022	1053
Blaine	809	879	976	1386	1711
Boundary	559	569	715	1022	1053
Camas	496	543	677	892	955
Cassia	496	543	677	892	955
Clearwater	496	512	635	916	1057
Elmore	422	492	647	820	1005
Gooding	496	543	677	892	955
Jerome	496	543	677	892	955
Lemhi	464	496	634	896	1065
Lincoln	496	543	677	892	955
Minidoka	386	508	596	789	812
Payette	419	504	641	812	1060
Teton	464	496	634	896	1065
Valley	487	507	639	865	1031
Bear Lake	416	479	613	871	1028
Bingham	420	465	596	820	847
Bonner	566	593	728	1030	1061
Butte	464	496	634	896	1065
Caribou	416	479	613	871	1028
Clark	464	496	634	896	1065
Custer	464	496	634	896	1065
Fremont	464	496	634	896	1065
Idaho	484	518	683	817	966
Latah	498	520	628	916	1059
Lewis	496	512	635	916	1057
Madison	463	464	596	865	942
Oneida	416	479	613	871	1028
Shoshone	493	494	596	785	831
Twin Falls	448	544	689	888	1051
Washington	487	507	639	865	1031

ILLINOIS

METROPOLITAN FMR AREAS	0 BR	1 BR	2 BR	3 BR	4 BR	Counties of FMR AREA within STATE
Bloomington-Normal, IL MSA	521	575	726	971	1214	McLean
Bond County, IL HMFA	417	446	579	842	990	Bond
Cape Girardeau-Jackson, MO-IL MSA	404	460	601	777	955	Alexander
Champaign-Urbana, IL MSA	498	606	713	895	1229	Champaign, Ford, Piatt
*Chicago-Joliet-Naperville, IL HMFA	790	904	1016	1242	1403	Cook, DuPage, Kane, Lake, McHenry, Will
Danville, IL MSA	393	470	605	724	768	Vermilion
Davenport-Moline-Rock Island, IA-IL MSA	476	531	669	853	889	Henry, Mercer, Rock Island
DeKalb County, IL HMFA	579	654	859	1114	1367	DeKalb
Decatur, IL MSA	412	490	622	829	855	Macon

SCHEDULE B - FY 2011 FINAL FAIR MARKET RENTS FOR EXISTING HOUSING PAGE 11

ILLINOIS continued

METROPOLITAN FMR AREAS	0 BR	1 BR	2 BR	3 BR	4 BR	Counties of FMR AREA within STATE
Grundy County, IL HMFA	583	683	895	1127	1517	Grundy
Kankakee-Bradley, IL MSA	505	550	725	940	1008	Kankakee
Kendall County, IL HMFA	805	806	969	1362	1476	Kendall
Macoupin County, IL HMFA	541	542	652	812	841	Macoupin
Peoria, IL MSA	458	542	675	869	987	Marshall, Peoria, Stark, Tazewell, Woodford
Rockford, IL MSA	503	567	718	939	967	Boone, Winnebago
Springfield, IL MSA	442	519	671	876	978	Menard, Sangamon
St. Louis, MO-IL HMFA	589	639	794	1023	1070	Calhoun, Clinton, Jersey, Madison, Monroe, St. Clair

NONMETROPOLITAN COUNTIES	0 BR	1 BR	2 BR	3 BR	4 BR	NONMETROPOLITAN COUNTIES	0 BR	1 BR	2 BR	3 BR	4 BR
Adams	370	440	569	739	763	Brown	369	448	569	760	783
Bureau	402	467	617	760	834	Carroll	432	488	615	766	788
Cass	450	452	569	723	745	Christian	372	476	569	735	860
Clark	368	514	569	828	855	Clay	373	465	569	760	781
Coles	393	503	605	853	1062	Crawford	371	438	569	748	785
Cumberland	394	490	592	788	1038	De Witt	468	469	572	747	874
Douglas	384	482	592	842	868	Edgar	370	433	569	716	737
Edwards	464	472	569	749	826	Effingham	500	501	603	762	805
Fayette	472	485	569	787	812	Franklin	368	452	569	706	998
Fulton	395	472	569	728	902	Gallatin	464	472	569	749	826
Greene	391	436	572	725	761	Hamilton	464	472	569	749	826
Hancock	475	476	569	684	707	Hardin	464	472	569	749	826
Henderson	393	459	569	719	859	Iroquois	423	470	569	716	839
Jackson	385	470	592	806	1003	Jasper	369	458	569	749	770
Jefferson	485	498	594	747	770	Jo Daviess	447	479	569	758	782
Johnson	464	472	569	749	826	Knox	392	458	603	801	826
La Salle	470	507	668	843	1084	Lawrence	369	432	569	757	781
Lee	409	503	604	806	939	Livingston	422	518	651	777	809
Logan	488	489	585	803	921	McDonough	384	452	569	729	954
Marion	415	476	569	728	801	Mason	369	468	569	799	824
Massac	473	474	569	828	855	Montgomery	473	474	569	682	845
Morgan	401	466	614	762	827	Moultrie	380	449	584	736	894
Ogle	484	517	677	886	946	Perry	369	483	569	687	883
Pike	369	451	569	765	788	Pope	464	472	569	749	826
Pulaski	464	472	569	749	826	Putnam	385	450	592	748	818
Randolph	370	432	569	754	925	Richland	424	513	569	784	938
Saline	370	477	569	770	998	Schuyler	369	451	569	765	788
Scott	391	436	572	725	761	Shelby	472	473	569	741	839
Stephenson	427	499	658	787	812	Union	473	475	569	698	867
Wabash	464	472	569	749	826	Warren	370	433	569	710	810
Washington	394	451	569	731	753	Wayne	369	448	569	724	745
White	464	472	569	749	826	Whiteside	435	513	632	782	804
Williamson	372	434	569	820	845						

SCHEDULE B - FY 2011 FINAL FAIR MARKET RENTS FOR EXISTING HOUSING PAGE 12

INDIANA

METROPOLITAN FMR AREAS	0 BR	1 BR	2 BR	3 BR	4 BR	Counties of FMR AREA within STATE
Anderson, IN MSA	573	573	689	886	923	Madison
Bloomington, IN HMFA	487	564	688	978	1010	Monroe
Carroll County, IN HMFA	416	489	641	844	869	Carroll
Cincinnati-Middleton, OH-KY-IN HMFA	490	581	752	1007	1045	Dearborn, Franklin, Ohio
Columbus, IN MSA	661	662	795	975	1043	Bartholomew
Elkhart-Goshen, IN MSA	546	608	752	945	990	Elkhart
Evansville, IN-KY HMFA	441	515	640	790	858	Posey, Vanderburgh, Warrick
Fort Wayne, IN MSA	460	489	611	762	783	Allen, Wells, Whitley
Gary, IN HMFA	536	668	815	974	1005	Lake, Newton, Porter
Gibson County, IN HMFA	497	498	596	762	1048	Gibson
Greene County, IN HMFA	462	464	596	865	894	Greene
Indianapolis, IN HMFA	553	641	761	985	1042	Boone, Brown, Hamilton, Hancock, Hendricks, Johnson, Marion, Morgan, Shelby
Jasper County, IN HMFA	593	595	739	964	993	Jasper
Kokomo, IN MSA	551	557	707	901	928	Howard, Tipton
Lafayette, IN HMFA	546	646	793	1032	1181	Benton, Tippecanoe
Louisville, KY-IN HMFA	506	585	694	970	1030	Clark, Floyd, Harrison
Michigan City-La Porte, IN MSA	472	545	692	919	945	LaPorte
Muncie, IN MSA	565	577	698	940	987	Delaware
Owen County, IN HMFA	507	509	610	772	1071	Owen
Putnam County, IN HMFA	563	564	679	811	915	Putnam
South Bend-Mishawaka, IN HMFA	542	602	725	930	958	St. Joseph
Sullivan County, IN HMFA	386	453	596	713	734	Sullivan
Terre Haute, IN HMFA	422	481	619	763	878	Clay, Vermillion, Vigo
Washington County, IN HMFA	454	507	596	733	976	Washington

NONMETROPOLITAN COUNTIES	0 BR	1 BR	2 BR	3 BR	4 BR	NONMETROPOLITAN COUNTIES	0 BR	1 BR	2 BR	3 BR	4 BR
Adams	495	537	596	780	920	Blackford	505	507	608	773	836
Cass	429	463	608	775	799	Clinton	525	556	680	849	891
Crawford	425	485	596	737	781	Daviess	495	498	596	775	951
Decatur	570	572	687	890	918	DeKalb	485	519	659	906	931
Dubois	397	477	611	834	858	Fayette	404	499	620	821	844
Fountain	438	526	596	797	834	Fulton	505	524	608	858	885
Grant	517	518	626	790	921	Henry	536	539	645	829	928
Huntington	462	550	650	811	982	Jackson	553	554	674	866	1051
Jay	387	474	596	808	833	Jefferson	438	470	619	741	917
Jennings	426	503	657	796	1095	Knox	414	472	596	738	921
Kosciusko	448	523	687	874	1017	LaGrange	544	545	654	788	875
Lawrence	428	505	659	788	811	Marshall	467	539	669	882	909
Martin	425	468	596	734	858	Miami	387	455	596	868	936
Montgomery	436	513	653	889	936	Noble	580	582	699	835	859
Orange	385	452	596	750	818	Parke	496	498	596	751	945
Perry	387	454	596	774	799	Pike	387	457	596	771	796
Pulaski	509	510	614	815	841	Randolph	495	496	596	850	877
Ripley	563	564	680	819	937	Rush	534	535	643	770	844
Scott	445	498	630	814	942	Spencer	387	457	596	771	796

SCHEDULE B - FY 2011 FINAL FAIR MARKET RENTS FOR EXISTING HOUSING PAGE 13

INDIANA continued

NONMETROPOLITAN COUNTIES	0 BR	1 BR	2 BR	3 BR	4 BR	NONMETROPOLITAN COUNTIES	0 BR	1 BR	2 BR	3 BR	4 BR
Starke	511	539	617	816	858	Steuben	494	563	740	892	918
Switzerland	465	505	664	831	927	Union	418	510	644	802	828
Wabash	389	454	596	815	928	Warren	420	516	646	795	922
Wayne	422	496	622	844	870	White	448	619	687	821	1160

IOWA

METROPOLITAN FMR AREAS	0 BR	1 BR	2 BR	3 BR	4 BR	Counties of FMR AREA within STATE
Ames, IA MSA	568	599	740	1059	1253	Story
Benton County, IA HMFA	360	425	555	691	925	Benton
Bremer County, IA HMFA	365	450	560	670	906	Bremer
Cedar Rapids, IA HMFA	436	507	668	947	1075	Linn
Davenport-Moline-Rock Island, IA-IL MSA	476	531	669	853	889	Scott
Des Moines-West Des Moines, IA MSA	508	606	739	947	1055	Dallas, Guthrie, Madison, Polk, Warren
Dubuque, IA MSA	417	449	590	793	864	Dubuque
Iowa City, IA HMFA	496	592	746	1087	1272	Johnson
Jones County, IA HMFA	462	463	555	778	802	Jones
Omaha-Council Bluffs, NE-IA HMFA	527	599	747	997	1026	Harrison, Mills, Pottawattamie
Sioux City, IA-NE-SD MSA	435	511	671	845	870	Woodbury
Washington County, IA HMFA	367	442	562	717	862	Washington
Waterloo-Cedar Falls, IA HMFA	419	515	616	756	926	Black Hawk, Grundy

NONMETROPOLITAN COUNTIES	0 BR	1 BR	2 BR	3 BR	4 BR	NONMETROPOLITAN COUNTIES	0 BR	1 BR	2 BR	3 BR	4 BR
Adair	379	422	555	677	757	Adams	379	422	555	677	757
Allamakee	393	433	555	719	765	Appanoose	360	421	555	701	768
Audubon	415	426	555	730	764	Boone	415	500	637	829	892
Buchanan	461	462	555	716	735	Buena Vista	432	437	572	686	788
Butler	393	433	555	719	765	Calhoun	440	441	555	713	746
Carroll	376	439	579	691	712	Cass	415	506	636	780	840
Cedar	393	434	572	740	800	Cerro Gordo	420	467	614	763	784
Cherokee	415	426	555	730	764	Chickasaw	393	433	555	719	765
Clarke	379	433	569	681	759	Clay	360	421	555	674	844
Clayton	393	433	555	719	765	Clinton	360	422	555	708	808
Crawford	415	438	555	730	764	Davis	379	422	555	677	757
Decatur	379	422	555	677	757	Delaware	393	434	572	740	800
Des Moines	430	470	596	749	844	Dickinson	360	444	555	702	973
Emmet	390	421	555	679	798	Fayette	393	433	555	719	765
Floyd	390	421	555	694	715	Franklin	401	441	555	709	744
Fremont	415	506	636	780	840	Greene	415	426	555	730	764
Hamilton	431	432	555	699	731	Hancock	401	441	555	709	744
Hardin	475	477	571	683	726	Henry	468	470	562	804	828
Howard	393	433	555	719	765	Humboldt	440	441	555	713	746
Ida	415	426	555	730	764	Iowa	430	455	564	738	761
Jackson	393	434	572	740	800	Jasper	432	472	620	789	823

SCHEDULE B - FY 2011 FINAL FAIR MARKET RENTS FOR EXISTING HOUSING PAGE 14

IOWA continued

NONMETROPOLITAN COUNTIES	0 BR	1 BR	2 BR	3 BR	4 BR
Jefferson	464	472	558	703	854
Kossuth	401	441	555	709	744
Louisa	426	477	589	762	806
Lyon	390	421	555	679	798
Marion	415	509	636	785	808
Mitchell	401	441	555	709	744
Monroe	379	422	555	677	757
Muscatine	423	523	650	800	863
Osceola	390	421	555	679	798
Palo Alto	390	421	555	679	798
Pocahontas	440	441	555	713	746
Ringgold	379	422	555	677	757
Shelby	415	506	636	780	840
Tama	430	455	564	738	761
Union	379	422	555	677	757
Wapello	396	460	607	724	755
Webster	422	430	558	772	797
Winneshiek	361	422	555	721	977
Wright	440	441	555	713	746

NONMETROPOLITAN COUNTIES	0 BR	1 BR	2 BR	3 BR	4 BR
Keokuk	379	422	555	677	757
Lee	405	471	555	704	724
Lucas	379	422	555	677	757
Mahaska	410	466	593	710	938
Marshall	424	492	614	790	906
Monona	415	426	555	730	764
Montgomery	415	506	636	780	840
O'Brien	390	421	555	679	798
Page	359	422	555	662	682
Plymouth	460	461	555	748	770
Poweshiek	387	451	594	759	782
Sac	415	426	555	730	764
Sioux	451	457	555	750	772
Taylor	379	422	555	677	757
Van Buren	379	422	555	677	757
Wayne	379	422	555	677	757
Winnebago	401	441	555	709	744
Worth	401	441	555	709	744

KANSAS

METROPOLITAN FMR AREAS	0 BR	1 BR	2 BR	3 BR	4 BR	Counties of FMR AREA within STATE
Franklin County, KS HMFA	539	540	669	852	911	Franklin
*Kansas City, MO-KS HMFA	610	733	842	1139	1198	Johnson, Leavenworth, Linn, Miami, Wyandotte
Lawrence, KS MSA	570	586	753	1099	1322	Douglas
Manhattan, KS MSA	442	509	618	860	1011	Geary, Pottawatomie, Riley
St. Joseph, MO-KS MSA	392	484	602	758	899	Doniphan
Sumner County, KS HMFA	373	438	576	775	902	Sumner
Topeka, KS MSA	500	544	666	844	888	Jackson, Jefferson, Osage, Shawnee, Wabaunsee
Wichita, KS HMFA	424	475	624	798	897	Butler, Harvey, Sedgwick

NONMETROPOLITAN COUNTIES	0 BR	1 BR	2 BR	3 BR	4 BR
Allen	433	438	575	762	829
Atchison	454	506	620	903	1089
Barton	373	450	575	764	990
Brown	454	506	620	903	1089
Chautauqua	416	462	575	741	806
Cheyenne	431	437	575	736	757
Clay	448	492	605	776	956
Coffey	401	438	575	731	754
Cowley	384	470	575	729	750
Decatur	431	437	575	736	757

NONMETROPOLITAN COUNTIES	0 BR	1 BR	2 BR	3 BR	4 BR
Anderson	416	462	575	741	806
Barber	374	440	575	749	883
Bourbon	417	443	575	831	936
Chase	401	438	575	731	754
Cherokee	480	497	575	805	988
Clark	501	506	616	750	822
Cloud	449	457	578	759	784
Comanche	374	440	575	749	883
Crawford	410	480	631	850	948
Dickinson	374	436	575	692	853

SCHEDULE B - FY 2011 FINAL FAIR MARKET RENTS FOR EXISTING HOUSING PAGE 15

KANSAS continued

NONMETROPOLITAN COUNTIES	0 BR	1 BR	2 BR	3 BR	4 BR
Edwards	374	440	575	749	883
Ellis	414	469	617	853	893
Finney	509	509	657	798	1010
Gove	431	437	575	736	757
Grant	501	506	616	750	822
Greeley	501	506	616	750	822
Hamilton	501	506	616	750	822
Haskell	501	506	616	750	822
Jewell	449	457	578	759	784
Kingman	374	440	575	749	883
Labette	374	447	575	779	802
Lincoln	449	457	578	759	784
Lyon	374	438	575	768	909
Marion	401	438	575	731	754
Meade	501	506	616	750	822
Montgomery	412	460	575	707	880
Morton	501	506	616	750	822
Neosho	373	448	575	684	1006
Norton	431	437	575	736	757
Ottawa	449	457	578	759	784
Phillips	431	437	575	736	757
Rawlins	431	437	575	736	757
Republic	449	457	578	759	784
Rooks	431	437	575	736	757
Russell	431	437	575	736	757
Scott	501	506	616	750	822
Sheridan	431	437	575	736	757
Smith	431	437	575	736	757
Stanton	501	506	616	750	822
Thomas	428	436	575	731	753
Wallace	431	437	575	736	757
Wichita	501	506	616	750	822
Woodson	416	462	575	741	806

NONMETROPOLITAN COUNTIES	0 BR	1 BR	2 BR	3 BR	4 BR
Elk	416	462	575	741	806
Ellsworth	449	457	578	759	784
Ford	529	530	638	785	839
Graham	431	437	575	736	757
Gray	501	506	616	750	822
Greenwood	401	438	575	731	754
Harper	374	440	575	749	883
Hodgeman	501	506	616	750	822
Kearny	501	506	616	750	822
Kiowa	374	440	575	749	883
Lane	501	506	616	750	822
Logan	431	437	575	736	757
McPherson	478	480	575	753	774
Marshall	448	492	605	776	956
Mitchell	449	457	578	759	784
Morris	448	492	605	776	956
Nemaha	454	506	620	903	1089
Ness	501	506	616	750	822
Osborne	431	437	575	736	757
Pawnee	374	440	575	749	883
Pratt	374	438	575	745	879
Reno	412	459	602	825	849
Rice	418	456	577	765	789
Rush	374	440	575	749	883
Saline	478	480	631	840	866
Seward	434	534	617	758	918
Sherman	423	437	575	722	744
Stafford	374	440	575	749	883
Stevens	501	506	616	750	822
Trego	431	437	575	736	757
Washington	449	457	578	759	784
Wilson	415	461	575	739	804

KENTUCKY

METROPOLITAN FMR AREAS	0 BR	1 BR	2 BR	3 BR	4 BR	Counties of FMR AREA within STATE
Bowling Green, KY MSA	460	550	669	892	1051	Edmonson, Warren
Cincinnati-Middleton, OH-KY-IN HMFA	490	581	752	1007	1045	Boone, Bracken, Campbell, Gallatin, Kenton, Pendleton
Clarksville, TN-KY HMFA	549	571	663	959	987	Christian, Trigg
Elizabethtown, KY MSA	425	473	571	813	1000	Hardin, Larue
Evansville, IN-KY HMFA	441	515	640	790	858	Henderson, Webster
Grant County, KY HMFA	464	560	713	878	983	Grant

SCHEDULE B - FY 2011 FINAL FAIR MARKET RENTS FOR EXISTING HOUSING PAGE 16

KENTUCKY continued

METROPOLITAN FMR AREAS	0 BR	1 BR	2 BR	3 BR	4 BR	Counties of FMR AREA within STATE
Huntington-Ashland, WV-KY-OH MSA	420	496	596	735	759	Boyd, Greenup
Lexington-Fayette, KY MSA	477	573	707	950	980	Bourbon, Clark, Fayette, Jessamine, Scott, Woodford
Louisville, KY-IN HMFA	506	585	694	970	1030	Bullitt, Henry, Jefferson, Oldham, Spencer, Trimble
Meade County, KY HMFA	481	483	578	742	831	Meade
Nelson County, KY HMFA	412	497	601	876	947	Nelson
Owensboro, KY MSA	414	461	606	841	890	Daviess, Hancock, McLean
Shelby County, KY HMFA	575	576	696	916	943	Shelby

NONMETROPOLITAN COUNTIES	0 BR	1 BR	2 BR	3 BR	4 BR	NONMETROPOLITAN COUNTIES	0 BR	1 BR	2 BR	3 BR	4 BR
Adair	384	426	506	617	688	Allen	331	430	506	676	874
Anderson	487	521	688	995	1186	Ballard	415	458	565	724	816
Barren	349	408	529	660	726	Bath	396	428	529	661	683
Bell	332	454	506	604	741	Boyle	424	470	617	739	763
Breathitt	420	441	506	629	657	Breckinridge	413	415	534	714	736
Butler	453	537	653	859	884	Caldwell	420	421	506	641	728
Calloway	503	504	606	747	1064	Carlisle	415	458	565	724	816
Carroll	497	498	619	818	889	Carter	330	439	509	606	686
Casey	384	426	506	617	688	Clay	328	454	506	604	622
Clinton	384	426	506	617	688	Crittenden	420	421	506	661	750
Cumberland	384	426	506	617	688	Elliott	442	443	534	679	802
Estill	420	421	506	647	852	Fleming	396	428	529	661	683
Floyd	383	430	506	664	765	Franklin	500	530	697	945	972
Fulton	415	458	565	724	816	Garrard	426	476	572	683	1002
Graves	406	408	506	604	737	Grayson	421	422	506	660	774
Green	381	422	506	612	683	Harlan	419	451	506	622	787
Harrison	435	437	571	749	773	Hart	376	411	506	646	752
Hickman	415	458	565	724	816	Hopkins	419	420	506	635	888
Jackson	419	441	506	612	630	Johnson	330	431	506	690	709
Knott	420	441	506	633	657	Knox	331	400	506	713	738
Laurel	420	455	506	621	850	Lawrence	328	383	506	676	696
Lee	420	441	506	633	657	Leslie	420	441	506	633	657
Letcher	420	441	506	629	657	Lewis	396	428	529	661	683
Lincoln	365	500	554	663	876	Livingston	419	420	506	651	739
Logan	447	485	540	739	819	Lyon	493	502	595	772	800
McCracken	379	477	586	786	810	McCreary	420	454	506	652	669
Madison	434	461	590	832	976	Magoffin	420	424	506	623	651
Marion	413	415	534	714	736	Marshall	453	455	548	714	929
Martin	420	424	506	623	651	Mason	341	436	527	769	883
Menifee	396	428	529	661	683	Mercer	461	491	557	734	863
Metcalfe	376	411	506	646	752	Monroe	376	411	506	646	752
Montgomery	406	473	624	744	768	Morgan	396	428	529	661	683
Muhlenberg	417	418	506	643	660	Nicholas	518	519	679	832	917
Ohio	418	444	506	671	737	Owen	553	631	720	969	1262

SCHEDULE B - FY 2011 FINAL FAIR MARKET RENTS FOR EXISTING HOUSING PAGE 17

KENTUCKY continued

NONMETROPOLITAN COUNTIES	0 BR	1 BR	2 BR	3 BR	4 BR
Owsley	420	441	506	633	657
Pike	429	430	518	622	640
Pulaski	359	398	506	624	661
Rockcastle	419	441	506	612	630
Russell	384	426	506	617	688
Taylor	333	455	506	652	857
Union	446	447	539	656	690
Wayne	331	404	506	656	676
Wolfe	420	441	506	633	657

NONMETROPOLITAN COUNTIES	0 BR	1 BR	2 BR	3 BR	4 BR
Perry	420	442	506	605	742
Powell	383	483	591	707	729
Robertson	396	428	529	661	683
Rowan	445	494	549	689	711
Simpson	453	532	699	869	895
Todd	493	502	595	772	800
Washington	413	415	534	714	736
Whitley	386	407	536	640	659

LOUISIANA

METROPOLITAN FMR AREAS	0 BR	1 BR	2 BR	3 BR	4 BR	Counties of FMR AREA within STATE
Alexandria, LA MSA	493	533	635	826	850	Grant, Rapides
Baton Rouge, LA HMFA	638	694	801	1021	1123	Ascension, East Baton Rouge, East Feliciana, Livingston, Pointe Coupee, St. Helena, West Baton Rouge, West Feliciana
Houma-Bayou Cane-Thibodaux, LA MSA	546	550	683	897	1022	Lafourche, Terrebonne
Iberville Parish, LA HMFA	499	500	602	815	840	Iberville
Lafayette, LA MSA	570	654	725	930	1180	Lafayette, St. Martin
Lake Charles, LA MSA	533	601	731	902	1270	Calcasieu, Cameron
Monroe, LA MSA	484	548	681	904	932	Ouachita, Union
New Orleans-Metairie-Kenner, LA MSA	767	850	994	1276	1319	Jefferson, Orleans, Plaquemines, St. Bernard, St. Charles, St. John the Baptist, St. Tammany
Shreveport-Bossier City, LA MSA	552	635	742	942	971	Bossier, Caddo, De Soto

NONMETROPOLITAN COUNTIES	0 BR	1 BR	2 BR	3 BR	4 BR
Acadia	455	455	554	700	803
Assumption	520	522	627	765	786
Beauregard	473	485	571	831	1000
Caldwell	437	467	554	701	782
Claiborne	510	519	614	734	803
East Carroll	437	467	554	701	782
Franklin	437	467	554	701	782
Jackson	437	467	554	701	782
La Salle	420	453	554	702	849
Madison	437	467	554	701	782
Natchitoches	533	535	641	768	992
Richland	437	467	554	701	782
St. James	531	620	760	933	961
St. Mary	504	513	617	806	832
Tensas	437	467	554	701	782
Vernon	454	500	554	804	960
Webster	447	448	566	763	787
Winn	460	499	554	699	744

NONMETROPOLITAN COUNTIES	0 BR	1 BR	2 BR	3 BR	4 BR
Allen	459	461	554	805	894
Avoyelles	358	488	554	754	901
Bienville	510	519	614	734	803
Catahoula	420	453	554	702	849
Concordia	420	453	554	718	849
Evangeline	458	460	554	710	730
Iberia	526	539	636	785	916
Jefferson Davis	460	461	554	701	720
Lincoln	547	564	657	855	883
Morehouse	471	473	588	705	763
Red River	510	519	614	734	803
Sabine	510	519	614	734	803
St. Landry	362	434	554	748	796
Tangipahoa	481	559	703	842	1000
Vermilion	461	462	554	760	786
Washington	460	464	554	738	760
West Carroll	437	467	554	701	782

SCHEDULE B - FY 2011 FINAL FAIR MARKET RENTS FOR EXISTING HOUSING PAGE 18

MAINE

METROPOLITAN FMR AREAS	0 BR	1 BR	2 BR	3 BR	4 BR	Components of FMR AREA within STATE
Bangor, ME HMFA	548	639	815	1036	1170	Penobscot County towns of Bangor city, Brewer city, Eddington town, Glenburn town, Hampden town, Hermon town, Holden town, Kenduskeag town, Milford town, Old Town city, Orono town, Orrington town, Penobscot Indian Island Reservation, Veazie town
Cumberland County, ME (part) HMFA	597	713	919	1097	1406	Cumberland County towns of Baldwin town, Bridgton town, Brunswick town, Harpswell town, Harrison town, Naples town, New Gloucester town, Pownal town, Sebago town
Lewiston-Auburn, ME MSA	451	565	691	875	969	Androscoggin County towns of Auburn city, Durham town, Greene town, Leeds town, Lewiston city, Lisbon town, Livermore town, Livermore Falls town, Mechanic Falls town, Minot town, Poland town, Sabattus town, Turner town, Wales town
Penobscot County, ME (part) HMFA	559	561	674	843	1033	Penobscot County towns of Alton town, Argyle UT, Bradford town, Bradley town, Burlington town, Carmel town, Carroll plantation, Charleston town, Chester town, Clifton town, Corinna town, Corinth town, Dexter town, Dixmont town, Drew plantation, East Central Penobscot UT, East Millinocket town, Edinburg town, Enfield town, Etna town, Exeter town, Garland town, Greenbush town, Howland town, Hudson town, Kingman UT, Lagrange town, Lakeville town, Lee town, Levant town, Lincoln town, Lowell town, Mattawamkeag town, Maxfield town, Medway town, Millinocket town, Mount Chase town, Newburgh town, Newport town, North Penobscot UT, Passadumkeag town, Patten town, Plymouth town, Prentiss UT, Seboeis plantation, Springfield town, Stacyville town, Stetson town, Twombly UT, Webster plantation, Whitney UT, Winn town, Woodville town
Portland, ME HMFA	729	865	1121	1412	1513	Cumberland County towns of Cape Elizabeth town, Casco town, Cumberland town, Falmouth town, Freeport town, Frye Island town, Gorham town, Gray town, Long Island town, North Yarmouth town, Portland city, Raymond town, Scarborough town, South Portland city, Standish town, Westbrook city, Windham town, Yarmouth town York County towns of Buxton town, Hollis town, Limington town, Old Orchard Beach town
Sagadahoc County, ME HMFA	721	722	866	1045	1500	Sagadahoc County towns of Arrowsic town, Bath city, Bowdoin town, Bowdoinham town, Georgetown town, Perkins UT, Phippsburg town, Richmond town, Topsham town, West Bath town, Woolwich town
York County, ME (part) HMFA	659	685	871	1042	1138	York County towns of Acton town, Alfred town, Arundel town, Biddeford city, Cornish town, Dayton town, Kennebunk town, Kennebunkport town, Lebanon town, Limerick town, Lyman town, Newfield town, North Berwick town, Ogunquit town, Parsonsfield town, Saco city, Sanford town, Shapleigh town, Waterboro town, Wells town
York-Kittery-South Berwick, ME HMFA	847	852	1022	1488	1622	York County towns of Berwick town, Eliot town, Kittery town, South Berwick town, York town

SCHEDULE B - FY 2011 FINAL FAIR MARKET RENTS FOR EXISTING HOUSING PAGE 19

MAINE continued

NONMETROPOLITAN COUNTIES	0 BR	1 BR	2 BR	3 BR	4 BR	Towns within nonmetropolitan counties
Aroostook County, ME	426	525	629	821	905	Allagash town, Amity town, Ashland town, Bancroft town, Blaine town, Bridgewater town, Caribou city, Cary plantation, Castle Hill town, Caswell town, Central Aroostook UT, Chapman town, Connor UT, Crystal town, Cyr plantation, Dyer Brook town, Eagle Lake town, Easton town, Fort Fairfield town, Fort Kent town, Frenchville town, Garfield plantation, Glenwood plantation, Grand Isle town, Hamlin town, Hammond town, Haynesville town, Hersey town, Hodgdon town, Houlton town, Island Falls town, Limestone town, Linneus town, Littleton town, Ludlow town, Macwahoc plantation, Madawaska town, Mapleton town, Mars Hill town, Masardis town, Merrill town, Monticello town, Moro plantation, Nashville plantation, New Canada town, New Limerick town, New Sweden town, Northwest Aroostook UT, Oakfield town, Orient town, Oxbow plantation, Penobscot Indian Island Reservation, Perham town, Portage Lake town, Presque Isle city, Reed plantation, St. Agatha town, St. Francis town, St. John plantation, Sherman town, Smyrna town, South Aroostook UT, Square Lake UT, Stockholm town, Van Buren town, Wade town, Wallagrass town, Washburn town, Westfield town, Westmanland town, Weston town, Winterville plantation, Woodland town
Franklin County, ME	528	570	694	829	1076	Avon town, Carrabassett Valley town, Carthage town, Chesterville town, Coplin plantation, Dallas plantation, East Central Franklin UT, Eustis town, Farmington town, Industry town, Jay town, Kingfield town, Madrid town, New Sharon town, New Vineyard town, North Franklin UT, Phillips town, Rangeley town, Rangeley plantation, Sandy River plantation, South Franklin UT, Strong town, Temple town, Weld town, West Central Franklin UT, Wilton town, Wyman UT
Hancock County, ME	577	665	774	1090	1122	Amherst town, Aurora town, Bar Harbor town, Blue Hill town, Brooklin town, Brooksville town, Bucksport town, Castine town, Central Hancock UT, Cranberry Isles town, Dedham town, Deer Isle town, Eastbrook town, East Hancock UT, Ellsworth city, Franklin town, Frenchboro town, Gouldsboro town, Great Pond town, Hancock town, Lamoine town, Mariaville town, Mount Desert town, Northwest Hancock UT, Orland town, Osborn town, Otis town, Penobscot town, Sedgwick town, Sorrento town, Southwest Harbor town, Stonington town, Sullivan town, Surry town, Swans Island town, Tremont town, Trenton town, Verona town, Waltham town, Winter Harbor town
Kennebec County, ME	457	548	682	931	994	Albion town, Augusta city, Belgrade town, Benton town, Chelsea town, China town, Clinton town, Farmingdale town, Fayette town, Gardiner city, Hallowell city, Litchfield town, Manchester town, Monmouth town, Mount Vernon town, Oakland town, Pittston town, Randolph town, Readfield town,

SCHEDULE B - FY 2011 FINAL FAIR MARKET RENTS FOR EXISTING HOUSING PAGE 20

MAINE continued

NONMETROPOLITAN COUNTIES	0 BR	1 BR	2 BR	3 BR	4 BR	Towns within nonmetropolitan counties
						Rome town, Sidney town, Unity UT, Vassalboro town, Vienna town, Waterville city, Wayne town, West Gardiner town, Windsor town, Winslow town, Winthrop town
Knox County, ME	523	691	789	1068	1232	Appleton town, Camden town, Criehaven UT, Cushing town, Friendship town, Hope town, Isle au Haut town, Matinicus Isle plantation, North Haven town, Owls Head town, Rockland city, Rockport town, St. George town, South Thomaston town, Thomaston town, Union town, Vinalhaven town, Warren town, Washington town
Lincoln County, ME	631	678	818	988	1018	Alna town, Boothbay town, Boothbay Harbor town, Bremen town, Bristol town, Damariscotta town, Dresden town, Edgecomb town, Hibberts gore, Jefferson town, Monhegan plantation, Newcastle town, Nobleboro town, Somerville town, South Bristol town, Southport town, Waldoboro town, Westport town, Whitefield town, Wiscasset town
Oxford County, ME	441	586	675	899	1127	Andover town, Bethel town, Brownfield town, Buckfield town, Byron town, Canton town, Denmark town, Dixfield town, Fryeburg town, Gilead town, Greenwood town, Hanover town, Hartford town, Hebron town, Hiram town, Lincoln plantation, Lovell town, Magalloway plantation, Mexico town, Milton UT, Newry town, North Oxford UT, Norway town, Otisfield town, Oxford town, Paris town, Peru town, Porter town, Roxbury town, Rumford town, South Oxford UT, Stoneham town, Stow town, Sumner town, Sweden town, Upton town, Waterford town, West Paris town, Woodstock town
Piscataquis County, ME	548	625	773	981	1050	Abbot town, Atkinson town, Beaver Cove town, Blanchard UT, Bowerbank town, Brownville town, Dover-Foxcroft town, Greenville town, Guilford town, Kingsbury plantation, Lake View plantation, Medford town, Milo town, Monson town, Northeast Piscataquis UT, Northwest Piscataquis UT, Parkman town, Sangerville town, Sebec town, Shirley town, Southeast Piscataquis UT, Wellington town, Willimantic town
Somerset County, ME	439	545	646	912	967	Anson town, Athens town, Bingham town, Brighton plantation, Cambridge town, Canaan town, Caratunk town, Central Somerset UT, Cornville town, Dennistown plantation, Detroit town, Embden town, Fairfield town, Harmony town, Hartland town, Highland plantation, Jackman town, Madison town, Mercer town, Moose River town, Moscow town, New Portland town, Norridgewock town, Northeast Somerset UT, Northwest Somerset UT, Palmyra town, Pittsfield town, Pleasant Ridge plantation, Ripley town, St. Albans town, Seboomook Lake UT, Skowhegan town, Smithfield town, Solon town, Starks town, The Forks plantation, West Forks plantation
Waldo County, ME	615	660	796	976	1038	Belfast city, Belmont town, Brooks town, Burnham town, Frankfort town, Freedom town, Islesboro town, Jackson town, Knox town, Liberty town, Lincolnville town, Monroe town, Montville town, Morrill town, Northport town, Palermo town, Prospect town, Searsmont town, Searsport town,

SCHEDULE B - FY 2011 FINAL FAIR MARKET RENTS FOR EXISTING HOUSING PAGE 21

MAINE continued

NONMETROPOLITAN COUNTIES	0 BR	1 BR	2 BR	3 BR	4 BR	Towns within nonmetropolitan counties
Washington County, ME	528	571	681	844	920	Stockton Springs town, Swanville town, Thorndike town, Troy town, Unity town, Waldo town, Winterport town Addison town, Alexander town, Baileyville town, Baring plantation, Beals town, Beddington town, Calais city, Centerville town, Charlotte town, Cherryfield town, Codyville plantation, Columbia town, Columbia Falls town, Cooper town, Crawford town, Cutler town, Danforth town, Deblois town, Dennysville town, East Central Washington UT, East Machias town, Eastport city, Grand Lake Stream plantation, Harrington town, Jonesboro town, Jonesport town, Lubec town, Machias town, Machiasport town, Marshfield town, Meddybemps town, Milbridge town, Northfield town, North Washington UT, Passamaquoddy Indian Township Reservation, Passamaquoddy Pleasant Point Reservation, Pembroke town, Perry town, Princeton town, Robbinston town, Roque Bluffs town, Steuben town, Talmadge town, Topsfield town, Vanceboro town, Waite town, Wesley town, Whiting town, Whitneyville town

MARYLAND

METROPOLITAN FMR AREAS	0 BR	1 BR	2 BR	3 BR	4 BR	Counties of FMR AREA within STATE
*Baltimore-Towson, MD HMFA	931	1052	1263	1622	2003	Anne Arundel, Baltimore, Carroll, Harford, Howard, Queen Anne's, Baltimore city
Columbia city, MD HMFA	1352	1406	1631	2217	2582	Columbia city
Cumberland, MD-WV MSA	425	514	603	813	949	Allegany
Hagerstown, MD HMFA	568	651	833	1202	1240	Washington
*Philadelphia-Camden-Wilmington, PA-NJ-DE-MD MSA	789	900	1077	1317	1589	Cecil
Salisbury, MD HMFA	603	751	882	1093	1253	Wicomico
Somerset County, MD HMFA	595	633	745	922	1211	Somerset
*Washington-Arlington-Alexandria, DC-VA-MD HMFA	1131	1289	1461	1885	2466	Calvert, Charles, Frederick, Montgomery, Prince George's

NONMETROPOLITAN COUNTIES	0 BR	1 BR	2 BR	3 BR	4 BR
Caroline	676	699	817	1105	1135
Garrett	424	526	653	842	1117
St. Mary's	854	886	1154	1516	1996
Worcester	725	753	873	1275	1357

NONMETROPOLITAN COUNTIES	0 BR	1 BR	2 BR	3 BR	4 BR
Dorchester	509	612	779	1051	1081
Kent	760	761	916	1124	1509
Talbot	791	793	954	1291	1363

MASSACHUSETTS

METROPOLITAN FMR AREAS	0 BR	1 BR	2 BR	3 BR	4 BR	Components of FMR AREA within STATE
Barnstable Town, MA MSA	784	918	1208	1441	1487	Barnstable County towns of Barnstable Town city, Bourne town, Brewster town, Chatham town, Dennis town, Eastham town, Falmouth town, Harwich town, Mashpee town, Orleans town, Provincetown town, Sandwich town, Truro town, Wellfleet town,

SCHEDULE B - FY 2011 FINAL FAIR MARKET RENTS FOR EXISTING HOUSING PAGE 22

MASSACHUSETTS continued

METROPOLITAN FMR AREAS	0 BR	1 BR	2 BR	3 BR	4 BR	Components of FMR AREA within STATE
						Yarmouth town
Berkshire County, MA (part) HMFA.....	622	699	806	1103	1135	Berkshire County towns of Alford town, Becket town, Clarksburg town, Egremont town, Florida town, Great Barrington town, Hancock town, Monterey town, Mount Washington town, New Ashford town, New Marlborough town, North Adams city, Otis town, Peru town, Sandisfield town, Savoy town, Sheffield town, Tyringham town, Washington town, West Stockbridge town, Williamstown town, Windsor town
Boston-Cambridge-Quincy, MA-NH HMFA.....	1083	1149	1349	1613	1773	Essex County towns of Amesbury town, Beverly city, Danvers town, Essex town, Gloucester city, Hamilton town, Ipswich town, Lynn city, Lynnfield town, Manchester-by-the-Sea town, Marblehead town, Middleton town, Nahant town, Newbury town, Newburyport city, Peabody city, Rockport town, Rowley town, Salem city, Salisbury town, Saugus town, Swampscott town, Topsfield town, Wenham town Middlesex County towns of Acton town, Arlington town, Ashby town, Ashland town, Ayer town, Bedford town, Belmont town, Boxborough town, Burlington town, Cambridge city, Carlisle town, Concord town, Everett city, Framingham town, Holliston town, Hopkinton town, Hudson town, Lexington town, Lincoln town, Littleton town, Malden city, Marlborough city, Maynard town, Medford city, Melrose city, Natick town, Newton city, North Reading town, Reading town, Sherborn town, Shirley town, Somerville city, Stoneham town, Stow town, Sudbury town, Townsend town, Wakefield town, Waltham city, Watertown city, Wayland town, Weston town, Wilmington town, Winchester town, Woburn city Norfolk County towns of Bellingham town, Braintree town, Brookline town, Canton town, Cohasset town, Dedham town, Dover town, Foxborough town, Franklin city, Holbrook town, Medfield town, Medway town, Millis town, Milton town, Needham town, Norfolk town, Norwood town, Plainville town, Quincy city, Randolph town, Sharon town, Stoughton town, Walpole town, Wellesley town, Westwood town, Weymouth town, Wrentham town Plymouth County towns of Carver town, Duxbury town, Hanover town, Hingham town, Hull town, Kingston town, Marshfield town, Norwell town, Pembroke town, Plymouth town, Rockland town, Scituate town, Wareham town Suffolk County towns of Boston city, Chelsea city, Revere city, Winthrop town
Brockton, MA HMFA.....	985	1025	1291	1544	1935	Norfolk County towns of Avon town Plymouth County towns of Abington town, Bridgewater town, Brockton city, East Bridgewater town, Halifax town, Hanson town, Lakeville town, Marion town, Mattapoisett town, Middleborough town, Plympton town, Rochester town, West Bridgewater town, Whitman town
Eastern Worcester County, MA HMFA.....	721	806	1061	1268	1862	Worcester County towns of Berlin town, Blackstone town, Bolton town, Harvard town, Hopedale town, Lancaster town,

SCHEDULE B - FY 2011 FINAL FAIR MARKET RENTS FOR EXISTING HOUSING PAGE 23

MASSACHUSETTS continued

METROPOLITAN FMR AREAS	0 BR	1 BR	2 BR	3 BR	4 BR	Components of FMR AREA within STATE
						Mendon town, Milford town, Millville town, Southborough town, Upton town
Easton-Raynham, MA HMFA	853	1131	1315	1573	2274	Bristol County towns of Easton town, Raynham town
Fitchburg-Leominster, MA HMFA	702	807	1012	1239	1346	Worcester County towns of Ashburnham town, Fitchburg city, Gardner city, Leominster city, Lunenburg town, Templeton town, Westminster town, Winchendon town
Franklin County, MA (part) HMFA	626	730	905	1207	1458	Franklin County towns of Ashfield town, Bernardston town, Buckland town, Charlemont town, Colrain town, Conway town, Deerfield town, Erving town, Gill town, Greenfield town, Hawley town, Heath town, Leverett town, Leyden town, Monroe town, Montague town, New Salem town, Northfield town, Orange town, Rowe town, Shelburne town, Shutesbury town, Warwick town, Wendell town, Whately town
Lawrence, MA-NH HMFA	769	978	1183	1413	1456	Essex County towns of Andover town, Boxford town, Georgetown town, Groveland town, Haverhill city, Lawrence city, Merrimac town, Methuen city, North Andover town, West Newbury town
Lowell, MA HMFA	852	1020	1311	1565	1717	Middlesex County towns of Billerica town, Chelmsford town, Dracut town, Dunstable town, Groton town, Lowell city, Pepperell town, Tewksbury town, Tyngsborough town, Westford town
New Bedford, MA HMFA	596	764	874	1047	1412	Bristol County towns of Acushnet town, Dartmouth town, Fairhaven town, Freetown town, New Bedford city
Pittsfield, MA HMFA	587	685	850	1092	1125	Berkshire County towns of Adams town, Cheshire town, Dalton town, Hinsdale town, Lanesborough town, Lee town, Lenox town, Pittsfield city, Richmond town, Stockbridge town
Providence-Fall River, RI-MA HMFA	762	848	977	1168	1440	Bristol County towns of Attleboro city, Fall River city, North Attleborough town, Rehoboth town, Seekonk town, Somerset town, Swansea town, Westport town
Springfield, MA HMFA	588	699	888	1063	1233	Franklin County towns of Sunderland town Hampden County towns of Agawam city, Blandford town, Brimfield town, Chester town, Chicopee city, East Longmeadow town, Granville town, Hampden town, Holland town, Holyoke city, Longmeadow town, Ludlow town, Monson town, Montgomery town, Palmer town, Russell town, Southwick town, Springfield city, Tolland town, Wales town, Westfield city, West Springfield town, Wilbraham town Hampshire County towns of Amherst town, Belchertown town, Chesterfield town, Cummington town, Easthampton city, Goshen town, Granby town, Hadley town, Hatfield town, Huntington town, Middlefield town, Northampton city, Pelham town, Plainfield town, Southampton town, South Hadley town, Ware town, Westhampton town, Williamsburg town, Worthington town
Taunton-Mansfield-Norton, MA HMFA	737	930	1135	1393	1503	Bristol County towns of Berkley town, Dighton town, Mansfield town, Norton town, Taunton city
Western Worcester County, MA HMFA	567	780	874	1043	1340	Worcester County towns of Athol town, Hardwick town, Hubbardston town, New Braintree town, Petersham town, Phillipston town, Royalston town, Warren town
Worcester, MA HMFA	704	810	986	1179	1250	Worcester County towns of Auburn town, Barre town,

SCHEDULE B - FY 2011 FINAL FAIR MARKET RENTS FOR EXISTING HOUSING PAGE 24

MASSACHUSETTS continued

METROPOLITAN FMR AREAS	0 BR	1 BR	2 BR	3 BR	4 BR	Components of FMR AREA within STATE
						Boylston town, Brookfield town, Charlton town, Clinton town, Douglas town, Dudley town, East Brookfield town, Grafton town, Holden town, Leicester town, Millbury town, Northborough town, Northbridge town, North Brookfield town, Oakham town, Oxford town, Paxton town, Princeton town, Rutland town, Shrewsbury town, Southbridge town, Spencer town, Sterling town, Sturbridge town, Sutton town, Uxbridge town, Webster town, Westborough town, West Boylston town, West Brookfield town, Worcester city

NONMETROPOLITAN COUNTIES	0 BR	1 BR	2 BR	3 BR	4 BR	Towns within nonmetropolitan counties
Dukes County, MA	941	1194	1422	1699	1752	Aquinnah town, Chilmark town, Edgartown town, Gosnold town, Oak Bluffs town, Tisbury town, West Tisbury town
Nantucket County, MA	1102	1525	1693	2025	2086	Nantucket town

MICHIGAN

METROPOLITAN FMR AREAS	0 BR	1 BR	2 BR	3 BR	4 BR	Counties of FMR AREA within STATE
Ann Arbor, MI MSA	647	725	882	1110	1142	Washtenaw
Barry County, MI HMFA	435	549	671	967	1064	Barry
Battle Creek, MI MSA	485	556	681	829	854	Calhoun
Bay City, MI MSA	447	500	608	812	835	Bay
Cass County, MI HMFA	486	555	614	814	945	Cass
Detroit-Warren-Livonia, MI HMFA	594	676	809	968	997	Lapeer, Macomb, Oakland, St. Clair, Wayne
Flint, MI MSA	495	523	628	778	803	Genesee
*Grand Rapids-Wyoming, MI HMFA	567	606	730	931	976	Kent
Holland-Grand Haven, MI MSA	609	619	743	1028	1110	Ottawa
Ionia County, MI HMFA	464	538	656	785	874	Ionia
Jackson, MI MSA	506	565	674	838	863	Jackson
Kalamazoo-Portage, MI MSA	523	558	678	901	940	Kalamazoo, Van Buren
Lansing-East Lansing, MI MSA	551	599	741	939	1018	Clinton, Eaton, Ingham
Livingston County, MI HMFA	720	759	893	1288	1567	Livingston
Monroe, MI MSA	643	645	776	1013	1116	Monroe
Muskegon-Norton Shores, MI MSA	451	470	611	808	831	Muskegon
Newaygo County, MI HMFA	511	540	617	835	859	Newaygo
Niles-Benton Harbor, MI MSA	475	532	649	794	1018	Berrien
Saginaw-Saginaw Township North, MI MSA	468	535	676	810	832	Saginaw

NONMETROPOLITAN COUNTIES	0 BR	1 BR	2 BR	3 BR	4 BR	NONMETROPOLITAN COUNTIES	0 BR	1 BR	2 BR	3 BR	4 BR
Alcona	420	486	595	801	848	Alger	393	499	595	734	826
Allegan	484	584	700	877	941	Alpena	470	534	595	822	909
Antrim	503	504	608	845	1066	Arenac	473	499	595	796	881
Baraga	393	499	595	734	826	Benzie	622	623	755	943	970
Branch	482	515	677	812	835	Charlevoix	528	571	633	910	939
Cheboygan	415	482	595	799	840	Chippewa	387	482	595	721	808

SCHEDULE B - FY 2011 FINAL FAIR MARKET RENTS FOR EXISTING HOUSING PAGE 25

MICHIGAN continued

NONMETROPOLITAN COUNTIES	0 BR	1 BR	2 BR	3 BR	4 BR
Clare	436	453	595	801	826
Delta	412	491	595	783	830
Emmet	442	544	678	914	967
Gogebic	411	491	595	728	865
Gratiot	496	497	595	793	886
Houghton	423	495	595	774	887
Iosco	486	515	595	865	898
Isabella	494	534	595	856	935
Keweenaw	411	491	595	728	865
Leelanau	622	623	755	943	970
Luce	411	502	595	781	851
Manistee	464	480	630	754	845
Mason	387	455	595	779	856
Menominee	494	496	595	785	1047
Missaukee	447	537	633	832	914
Montmorency	410	476	595	784	829
Ogemaw	458	481	595	769	850
Osceola	494	495	595	815	1026
Otsego	475	555	730	875	920
Roscommon	494	496	595	773	951
Sanilac	496	534	595	838	861
Shiawassee	415	510	635	874	975
Wexford	406	536	625	827	911

NONMETROPOLITAN COUNTIES	0 BR	1 BR	2 BR	3 BR	4 BR
Crawford	411	477	595	785	831
Dickinson	387	470	595	718	978
Gladwin	473	499	595	796	881
Grand Traverse	637	638	800	1047	1080
Hillsdale	407	501	597	839	918
Huron	494	497	595	789	958
Iron	411	491	595	728	865
Kalkaska	499	542	602	731	754
Lake	456	498	595	779	937
Lenawee	450	565	693	884	965
Mackinac	387	481	595	718	782
Marquette	386	500	595	749	813
Mecosta	424	505	611	812	1071
Midland	472	538	663	914	976
Montcalm	449	520	595	803	828
Oceana	431	499	595	720	768
Ontonagon	411	491	595	728	865
Oscoda	420	486	595	801	848
Presque Isle	420	486	595	801	848
St. Joseph	480	535	631	779	873
Schoolcraft	411	502	595	781	851
Tuscola	418	478	606	727	870

MINNESOTA

METROPOLITAN FMR AREAS	0 BR	1 BR	2 BR	3 BR	4 BR	Counties of FMR AREA within STATE
Duluth, MN-WI MSA	416	507	639	803	1022	Carlton, St. Louis
Fargo, ND-MN MSA	405	481	612	883	1021	Clay
Grand Forks, ND-MN MSA	418	525	644	816	1109	Polk
La Crosse, WI-MN MSA	421	492	648	860	1056	Houston
Mankato-North Mankato, MN MSA	511	595	691	964	1118	Blue Earth, Nicollet
Minneapolis-St. Paul-Bloomington, MN-WI MSA	646	761	924	1210	1359	Anoka, Carver, Chisago, Dakota, Hennepin, Isanti, Ramsey, Scott, Sherburne, Washington, Wright
Rochester, MN HMFA	618	660	867	1124	1174	Dodge, Olmsted
St. Cloud, MN MSA	509	560	671	949	1102	Benton, Stearns
Wabasha County, MN HMFA	423	471	604	756	1061	Wabasha

NONMETROPOLITAN COUNTIES	0 BR	1 BR	2 BR	3 BR	4 BR
Aitkin	427	501	659	822	890
Beltrami	414	489	622	855	1092
Brown	441	502	603	722	742
Chippewa	457	496	596	713	735
Cook	387	491	596	747	769

NONMETROPOLITAN COUNTIES	0 BR	1 BR	2 BR	3 BR	4 BR
Becker	386	458	596	746	775
Big Stone	386	470	596	762	788
Cass	387	495	596	752	774
Clearwater	417	470	596	752	1045
Cottonwood	436	477	596	760	795

MINNESOTA continued

NONMETROPOLITAN COUNTIES	0 BR	1 BR	2 BR	3 BR	4 BR
Crow Wing	441	515	680	872	1020
Faribault	436	477	596	760	795
Freeborn	387	453	596	710	937
Grant	386	470	596	762	788
Itasca	404	499	622	753	883
Kanabec	458	537	706	881	952
Kittson	392	470	596	759	889
Lac qui Parle	457	496	596	713	735
Lake of the Woods	417	470	596	752	1045
Lincoln	457	496	596	713	735
McLeod	554	555	688	985	1017
Marshall	392	470	596	759	889
Meeker	478	530	615	804	827
Morrison	399	475	614	734	1078
Murray	436	477	596	760	795
Norman	392	470	596	759	889
Pennington	389	458	596	753	822
Pipestone	436	477	596	760	795
Red Lake	392	470	596	759	889
Renville	478	499	615	804	827
Rock	436	477	596	760	795
Sibley	478	499	615	804	827
Stevens	387	486	596	718	970
Todd	430	483	597	721	958
Wadena	430	483	597	721	958
Watonwan	436	477	596	760	795
Winona	435	514	670	926	1175

NONMETROPOLITAN COUNTIES	0 BR	1 BR	2 BR	3 BR	4 BR
Douglas	420	500	629	911	997
Fillmore	410	494	616	804	1008
Goodhue	476	559	734	934	1011
Hubbard	417	470	596	752	1045
Jackson	436	477	596	760	795
Kandiyohi	480	492	611	823	849
Koochiching	387	495	596	752	774
Lake	387	491	596	747	769
Le Sueur	530	547	658	916	945
Lyon	455	511	628	783	806
Mahnomen	417	470	596	752	1045
Martin	494	495	596	865	892
Mille Lacs	494	508	669	829	921
Mower	399	467	596	740	763
Nobles	392	491	596	791	815
Otter Tail	389	462	596	727	749
Pine	478	518	669	874	902
Pope	386	470	596	762	788
Redwood	457	496	596	713	735
Rice	580	606	797	952	1107
Roseau	387	460	596	743	870
Steele	464	563	711	894	1166
Swift	386	470	596	762	788
Traverse	386	470	596	762	788
Waseca	427	501	659	788	824
Wilkin	386	470	596	762	788
Yellow Medicine	457	496	596	713	735

MISSISSIPPI

METROPOLITAN FMR AREAS	0 BR	1 BR	2 BR	3 BR	4 BR	Counties of FMR AREA within STATE
Gulfport-Biloxi, MS MSA	732	776	906	1181	1213	Hancock, Harrison, Stone
Hattiesburg, MS MSA	495	564	671	977	1009	Forrest, Lamar, Perry
Jackson, MS HMFA	583	659	764	919	947	Copiah, Hinds, Madison, Rankin
Marshall County, MS HMFA	393	491	606	885	912	Marshall
Memphis, TN-MS-AR HMFA	628	682	758	1010	1041	DeSoto
Pascagoula, MS MSA	628	719	863	1188	1275	George, Jackson
Simpson County, MS HMFA	501	529	605	725	1047	Simpson
Tate County, MS HMFA	500	579	644	902	1131	Tate
Tunica County, MS HMFA	496	597	765	919	1127	Tunica

SCHEDULE B - FY 2011 FINAL FAIR MARKET RENTS FOR EXISTING HOUSING PAGE 27

MISSISSIPPI continued

NONMETROPOLITAN COUNTIES	0 BR	1 BR	2 BR	3 BR	4 BR
Adams	397	550	610	731	1047
Amite	460	517	576	696	791
Benton	524	586	650	780	801
Calhoun	472	487	576	772	967
Chickasaw	435	535	626	750	788
Claiborne	479	480	576	722	847
Clay	478	479	576	839	866
Covington	479	480	576	722	847
Greene	437	468	576	752	792
Holmes	486	562	626	749	784
Issaquena	486	562	626	749	784
Jasper	453	489	576	692	737
Jefferson Davis	479	480	576	722	847
Kemper	478	532	611	800	827
Lauderdale	485	543	637	875	903
Leake	453	489	576	692	737
Leflore	374	438	576	765	900
Lowndes	503	516	605	879	906
Monroe	478	509	576	721	771
Neshoba	373	503	576	685	1007
Noxubee	484	502	584	800	853
Panola	373	517	576	690	795
Pike	478	518	576	758	782
Prentiss	374	436	576	691	711
Scott	479	509	576	689	743
Smith	453	489	576	692	737
Tallahatchie	389	436	576	764	800
Tishomingo	374	487	576	723	748
Walthall	460	517	576	696	791
Washington	397	517	610	792	968
Webster	472	487	576	772	967
Winston	435	535	626	750	788
Yazoo	477	506	576	688	711

NONMETROPOLITAN COUNTIES	0 BR	1 BR	2 BR	3 BR	4 BR
Alcorn	479	516	576	800	1013
Attala	472	487	576	772	967
Bolivar	469	530	610	731	1072
Carroll	389	436	576	764	800
Choctaw	472	487	576	772	967
Clarke	478	532	611	800	827
Coahoma	490	506	668	798	1173
Franklin	460	517	576	696	791
Grenada	449	492	576	811	965
Humphreys	389	436	576	764	800
Itawamba	373	509	576	761	899
Jefferson	479	480	576	722	847
Jones	389	452	576	759	783
Lafayette	515	609	751	900	926
Lawrence	479	480	576	722	847
Lee	523	545	629	859	968
Lincoln	420	518	576	790	1011
Marion	453	514	576	756	861
Montgomery	472	487	576	772	967
Newton	478	532	611	800	827
Oktibbeha	458	556	677	882	908
Pearl River	566	567	679	829	1169
Pontotoc	478	479	576	783	806
Quitman	469	502	592	709	889
Sharkey	486	562	626	749	784
Sunflower	418	514	576	821	847
Tippah	478	520	576	750	934
Union	391	543	602	721	872
Warren	585	642	717	857	883
Wayne	437	468	576	752	792
Wilkinson	460	517	576	696	791
Yalobusha	472	487	576	772	967

MISSOURI

METROPOLITAN FMR AREAS	0 BR	1 BR	2 BR	3 BR	4 BR	Counties of FMR AREA within STATE
Bates County, MO HMFA	376	443	578	812	838	Bates
Calloway County, MO HMFA	462	467	590	806	830	Callaway
Cape Girardeau-Jackson, MO-IL MSA	404	460	601	777	955	Bollinger, Cape Girardeau
Columbia, MO MSA	448	536	666	970	1082	Boone, Howard
Dallas County, MO HMFA	352	457	541	738	762	Dallas
Jefferson City, MO HMFA	417	458	595	843	937	Cole, Osage

SCHEDULE B - FY 2011 FINAL FAIR MARKET RENTS FOR EXISTING HOUSING PAGE 28

MISSOURI continued

METROPOLITAN FMR AREAS	0 BR	1 BR	2 BR	3 BR	4 BR	Counties of FMR AREA within STATE
Joplin, MO MSA	391	469	598	761	783	Jasper, Newton
*Kansas City, MO-KS HMFA	610	733	842	1139	1198	Caldwell, Cass, Clay, Clinton, Jackson, Lafayette, Platte, Ray
McDonald County, MO HMFA	433	434	544	774	799	McDonald
Moniteau County, MO HMFA	357	417	550	665	887	Moniteau
Polk County, MO HMFA	359	419	551	803	921	Polk
Springfield, MO HMFA	394	465	594	846	967	Christian, Greene, Webster
St. Joseph, MO-KS MSA	392	484	602	758	899	Andrew, Buchanan, DeKalb
St. Louis, MO-IL HMFA	589	639	794	1023	1070	Sullivan city part of Crawford, Franklin, Jefferson, Lincoln, St. Charles, St. Louis, Warren, St. Louis city
Washington County, MO HMFA	421	490	550	724	807	Washington

NONMETROPOLITAN COUNTIES	0 BR	1 BR	2 BR	3 BR	4 BR	NONMETROPOLITAN COUNTIES	0 BR	1 BR	2 BR	3 BR	4 BR
Adair	392	455	600	788	871	Atchison	434	435	541	674	834
Audrain	448	450	541	683	867	Barry	353	445	541	705	729
Barton	352	444	541	655	719	Benton	352	419	541	750	778
Butler	447	448	541	750	802	Camden	496	503	618	900	926
Carroll	473	474	599	751	839	Carter	448	450	541	752	808
Cedar	352	419	541	750	778	Chariton	473	474	599	751	839
Clark	398	410	541	669	789	Cooper	432	454	591	788	918
Crawford	352	446	541	720	949	Dade	415	438	575	736	795
Daviess	434	435	541	674	834	Dent	405	440	541	714	907
Douglas	399	448	541	716	829	Dunklin	419	456	541	691	772
Gasconade	384	418	541	677	862	Gentry	434	435	541	674	834
Grundy	434	435	541	674	834	Harrison	434	435	541	674	834
Henry	392	455	600	720	742	Hickory	352	419	541	750	778
Holt	434	435	541	674	834	Howell	372	427	541	671	949
Iron	398	447	588	751	870	Johnson	476	507	615	822	925
Knox	398	410	541	669	789	Laclede	444	445	541	708	928
Lawrence	448	450	541	736	849	Lewis	398	410	541	669	789
Linn	398	410	541	669	789	Livingston	425	426	541	723	946
Macon	437	439	541	648	696	Madison	398	447	588	751	870
Maries	405	440	541	714	907	Marion	357	415	548	713	733
Mercer	434	435	541	674	834	Miller	452	453	541	722	753
Mississippi	379	412	541	714	823	Monroe	357	417	550	707	727
Montgomery	357	417	550	707	727	Morgan	460	461	554	752	876
New Madrid	385	443	541	722	743	Nodaway	480	482	599	716	836
Oregon	399	448	541	716	829	Ozark	399	448	541	716	829
Pemiscot	353	413	541	680	700	Perry	403	439	575	689	1011
Pettis	474	475	615	767	919	Phelps	402	433	543	751	925
Pike	352	411	542	709	775	Pulaski	466	503	559	812	889
Putnam	398	410	541	669	789	Ralls	357	417	550	707	727
Randolph	367	431	564	715	735	Reynolds	448	450	541	752	808

SCHEDULE B - FY 2011 FINAL FAIR MARKET RENTS FOR EXISTING HOUSING PAGE 29

MISSOURI continued

NONMETROPOLITAN COUNTIES	0 BR	1 BR	2 BR	3 BR	4 BR
Ripley	448	450	541	752	808
Ste. Genevieve	398	447	588	751	870
Saline	361	423	556	721	846
Scotland	398	410	541	669	789
Shannon	399	448	541	716	829
Stoddard	419	436	541	737	797
Sullivan	398	410	541	669	789
Texas	427	450	541	745	858
Wayne	448	450	541	752	808
Wright	397	415	541	683	703
St. Clair	352	419	541	750	778
St. Francois	470	473	568	793	825
Schuyler	398	410	541	669	789
Scott	450	451	565	705	833
Shelby	398	410	541	669	789
Stone	401	467	617	809	890
Taney	514	516	651	777	988
Vernon	377	449	543	760	784
Worth	434	435	541	674	834

MONTANA

METROPOLITAN FMR AREAS	0 BR	1 BR	2 BR	3 BR	4 BR	Counties of FMR AREA within STATE
Billings, MT MSA	451	536	693	935	1125	Carbon, Yellowstone
Great Falls, MT MSA	411	495	635	859	1034	Cascade
Missoula, MT MSA	533	614	775	1004	1202	Missoula

NONMETROPOLITAN COUNTIES	0 BR	1 BR	2 BR	3 BR	4 BR
Beaverhead	498	581	763	987	1196
Blaine	403	481	609	812	927
Carter	484	502	596	803	855
Custer	389	539	596	868	898
Dawson	484	502	596	803	855
Fallon	484	502	596	803	855
Flathead	449	552	693	980	1202
Garfield	484	502	596	803	855
Golden Valley	484	502	596	803	855
Hill	387	477	596	859	912
Judith Basin	403	481	609	812	927
Lewis and Clark	479	548	684	993	1025
Lincoln	430	528	660	913	1024
Madison	498	581	763	987	1196
Mineral	533	603	757	970	1161
Park	475	554	728	871	1151
Phillips	484	502	596	803	855
Powder River	484	502	596	803	855
Prairie	484	502	596	803	855
Richland	484	502	596	803	855
Rosebud	443	460	596	735	784
Sheridan	484	502	596	803	855
Stillwater	484	502	596	803	855
Teton	403	481	609	812	927
Big Horn	445	462	596	738	787
Broadwater	445	510	648	876	941
Chouteau	403	481	609	812	927
Daniels	484	502	596	803	855
Deer Lodge	445	510	648	876	941
Fergus	434	453	596	722	769
Gallatin	508	604	786	1049	1377
Glacier	403	481	609	812	927
Granite	445	510	648	876	941
Jefferson	445	510	648	876	941
Lake	529	531	644	868	935
Liberty	403	481	609	812	927
McCone	484	502	596	803	855
Meagher	498	581	763	987	1196
Musselshell	484	502	596	803	855
Petroleum	484	502	596	803	855
Pondera	403	481	609	812	927
Powell	445	510	648	876	941
Ravalli	505	550	706	925	1094
Roosevelt	484	502	596	803	855
Sanders	430	528	660	913	1024
Silver Bow	436	469	603	788	862
Sweet Grass	484	502	596	803	855
Toole	403	481	609	812	927

SCHEDULE B - FY 2011 FINAL FAIR MARKET RENTS FOR EXISTING HOUSING PAGE 30

MONTANA continued

NONMETROPOLITAN COUNTIES	0 BR	1 BR	2 BR	3 BR	4 BR
Treasure	484	502	596	803	855
Wheatland	484	502	596	803	855
Valley	484	502	596	803	855
Wibaux	484	502	596	803	855

NEBRASKA

METROPOLITAN FMR AREAS	0 BR	1 BR	2 BR	3 BR	4 BR	Counties of FMR AREA within STATE
Lincoln, NE HMFA	463	520	661	927	1124	Lancaster
Omaha-Council Bluffs, NE-IA HMFA	527	599	747	997	1026	Cass, Douglas, Sarpy, Washington
Saunders County, NE HMFA	567	570	684	997	1027	Saunders
Seward County, NE HMFA	362	446	558	742	941	Seward
Sioux City, IA-NE-SD MSA	435	511	671	845	870	Dakota, Dixon

NONMETROPOLITAN COUNTIES	0 BR	1 BR	2 BR	3 BR	4 BR
Adams	389	454	597	755	777
Arthur	421	487	558	737	759
Blaine	466	467	561	693	808
Box Butte	417	424	558	730	868
Brown	417	424	558	724	868
Burt	464	465	558	699	722
Cedar	464	465	558	699	722
Cherry	417	424	558	724	868
Clay	393	460	605	774	898
Cuming	464	465	558	699	722
Dawes	361	425	558	668	831
Deuel	417	424	558	724	868
Dundy	421	487	558	737	759
Franklin	393	460	605	774	898
Furnas	421	487	558	737	759
Garden	417	424	558	724	868
Gosper	421	487	558	737	759
Greeley	466	467	561	693	808
Hamilton	466	467	561	693	808
Hayes	421	487	558	737	759
Holt	417	424	558	724	868
Howard	466	467	561	693	808
Johnson	463	464	558	708	742
Keith	421	487	558	737	759
Kimball	417	424	558	724	868
Lincoln	408	459	584	716	902
Loup	466	467	561	693	808
Madison	413	436	573	781	806
Morrill	417	424	558	724	868
Nemaha	463	464	558	708	742
Antelope	464	465	558	699	722
Banner	417	424	558	724	868
Boone	464	465	558	699	722
Boyd	417	424	558	724	868
Buffalo	420	492	647	880	1023
Butler	463	464	558	708	742
Chase	421	487	558	737	759
Cheyenne	417	424	558	724	868
Colfax	464	465	558	699	722
Custer	466	467	561	693	808
Dawson	482	523	582	708	730
Dodge	443	519	682	814	994
Fillmore	463	464	558	708	742
Frontier	421	487	558	737	759
Gage	464	465	558	681	701
Garfield	466	467	561	693	808
Grant	421	487	558	737	759
Hall	472	473	593	741	959
Harlan	393	460	605	774	898
Hitchcock	421	487	558	737	759
Hooker	421	487	558	737	759
Jefferson	463	464	558	708	742
Kearney	393	460	605	774	898
Keya Paha	417	424	558	724	868
Knox	464	465	558	699	722
Logan	421	487	558	737	759
McPherson	421	487	558	737	759
Merrick	466	467	561	693	808
Nance	464	465	558	699	722
Nuckolls	393	460	605	774	898

NEBRASKA continued

NONMETROPOLITAN COUNTIES	0 BR	1 BR	2 BR	3 BR	4 BR
Otoe	463	465	558	691	725
Perkins	421	487	558	737	759
Pierce	464	465	558	699	722
Polk	463	464	558	708	742
Richardson	463	464	558	708	742
Saline	493	520	594	726	750
Sheridan	417	424	558	724	868
Sioux	417	424	558	724	868
Thayer	463	464	558	708	742
Thurston	464	465	558	699	722
Wayne	464	465	558	699	722
Wheeler	466	467	561	693	808

NONMETROPOLITAN COUNTIES	0 BR	1 BR	2 BR	3 BR	4 BR
Pawnee	463	464	558	708	742
Phelps	393	460	605	774	898
Platte	464	465	558	814	838
Red Willow	386	503	558	812	837
Rock	417	424	558	724	868
Scotts Bluff	463	464	558	711	938
Sherman	466	467	561	693	808
Stanton	464	465	558	699	722
Thomas	421	487	558	737	759
Valley	466	467	561	693	808
Webster	393	460	605	774	898
York	393	465	608	738	886

NEVADA

METROPOLITAN FMR AREAS	0 BR	1 BR	2 BR	3 BR	4 BR	Counties of FMR AREA within STATE
Carson City, NV MSA	611	736	887	1292	1558	Carson
Las Vegas-Paradise, NV MSA	770	907	1067	1483	1785	Clark
Reno-Sparks, NV MSA	592	708	875	1271	1537	Storey, Washoe

NONMETROPOLITAN COUNTIES	0 BR	1 BR	2 BR	3 BR	4 BR
Churchill	659	661	830	1050	1233
Elko	594	646	838	1044	1344
Eureka	517	597	762	1012	1119
Lander	517	597	762	1012	1119
Lyon	546	614	808	1177	1213
Nye	462	642	713	1039	1070
White Pine	517	597	762	1012	1119

NONMETROPOLITAN COUNTIES	0 BR	1 BR	2 BR	3 BR	4 BR
Douglas	690	849	1031	1435	1591
Esmeralda	517	597	762	1012	1119
Humboldt	521	611	802	960	988
Lincoln	517	597	762	1012	1119
Mineral	517	597	762	1012	1119
Pershing	517	597	762	1012	1119

NEW HAMPSHIRE

METROPOLITAN FMR AREAS	0 BR	1 BR	2 BR	3 BR	4 BR	Components of FMR AREA within STATE
Boston-Cambridge-Quincy, MA-NH HMFA	1083	1149	1349	1613	1773	Rockingham County towns of Seabrook town, South Hampton town
Hillsborough County, NH (part) HMFA	749	761	999	1456	1754	Hillsborough County towns of Antrim town, Bennington town, Deering town, Francestown town, Greenfield town, Hancock town, Hillsborough town, Lyndeborough town, New Boston town, Peterborough town, Sharon town, Temple town, Windsor town
Lawrence, MA-NH HMFA	769	978	1183	1413	1456	Rockingham County towns of Atkinson town, Chester town, Danville town, Derry town, Fremont town, Hampstead town, Kingston town, Newton town, Plaistow town, Raymond town, Salem town, Sandown town, Windham town
Manchester, NH HMFA	721	885	1059	1266	1304	Hillsborough County towns of Bedford town, Goffstown town, Manchester city, Weare town

SCHEDULE B - FY 2011 FINAL FAIR MARKET RENTS FOR EXISTING HOUSING PAGE 32

NEW HAMPSHIRE continued

METROPOLITAN FMR AREAS	0 BR	1 BR	2 BR	3 BR	4 BR	Components of FMR AREA within STATE
Nashua, NH HMFA	798	939	1174	1570	1680	Hillsborough County towns of Amherst town, Brookline town, Greenville town, Hollis town, Hudson town, Litchfield town, Mason town, Merrimack town, Milford town, Mont Vernon town, Nashua city, New Ipswich town, Pelham town, Wilton town
Portsmouth-Rochester, NH HMFA	699	826	1030	1360	1534	Rockingham County towns of Brentwood town, East Kingston town, Epping town, Exeter town, Greenland town, Hampton town, Hampton Falls town, Kensington town, New Castle town, Newfields town, Newington town, Newmarket town, North Hampton town, Portsmouth city, Rye town, Stratham town Strafford County towns of Barrington town, Dover city, Durham town, Farmington town, Lee town, Madbury town, Middleton town, Milton town, New Durham town, Rochester city, Rollinsford town, Somersworth city, Strafford town
Western Rockingham County, NH HMFA	910	911	1096	1449	1494	Rockingham County towns of Auburn town, Candia town, Deerfield town, Londonderry town, Northwood town, Nottingham town

NONMETROPOLITAN COUNTIES	0 BR	1 BR	2 BR	3 BR	4 BR	Towns within nonmetropolitan counties
Belknap County, NH	591	727	908	1199	1541	Alton town, Barnstead town, Belmont town, Center Harbor town, Gilford town, Gilmanton town, Laconia city, Meredith town, New Hampton town, Sanbornton town, Tilton town
Carroll County, NH	654	691	911	1239	1521	Albany town, Bartlett town, Brookfield town, Chatham town, Conway town, Eaton town, Effingham town, Freedom town, Hale's location, Hart's Location town, Jackson town, Madison town, Moultonborough town, Ossipee town, Sandwich town, Tamworth town, Tuftonboro town, Wakefield town, Wolfeboro town
Cheshire County, NH	725	774	970	1170	1424	Alstead town, Chesterfield town, Dublin town, Fitzwilliam town, Gilsum town, Harrisville town, Hinsdale town, Jaffrey town, Keene city, Marlborough town, Marlow town, Nelson town, Richmond town, Rindge town, Roxbury town, Stoddard town, Sullivan town, Surry town, Swanzey town, Troy town, Walpole town, Westmoreland town, Winchester town
Coos County, NH	425	556	653	916	1028	Atkinson and Gilmanton Academy grant, Beans grant, Beans purchase, Berlin city, Cambridge township, Carroll town, Chandlers purchase, Clarksville town, Colebrook town, Columbia town, Crawfords purchase, Cutts grant, Dalton town, Dixs grant, Dixville township, Dummer town, Errol town, Ervings location, Gorham town, Greens grant, Hadleys purchase, Jefferson town, Kilkenny township, Lancaster town, Low and Burbanks grant, Martins location, Milan town, Millsfield township, Northumberland town, Odell township, Pinkhams grant, Pittsburg town, Randolph town, Sargents purchase, Second College grant, Shelburne town, Stark town, Stewartstown town, Stratford town, Success township,

NEW HAMPSHIRE continued

NONMETROPOLITAN COUNTIES	0 BR	1 BR	2 BR	3 BR	4 BR	Towns within nonmetropolitan counties
						Thompson and Meserves purchase, Wentworth location, Whitefield town
Grafton County, NH	644	709	898	1208	1273	Alexandria town, Ashland town, Bath town, Benton town, Bethlehem town, Bridgewater town, Bristol town, Campton town, Canaan town, Dorchester town, Easton town, Ellsworth town, Enfield town, Franconia town, Grafton town, Groton town, Hanover town, Haverhill town, Hebron town, Holderness town, Landaff town, Lebanon city, Lincoln town, Lisbon town, Littleton town, Livermore town, Lyman town, Lyme town, Monroe town, Orange town, Orford town, Piermont town, Plymouth town, Rumney town, Sugar Hill town, Thornton town, Warren town, Waterville Valley town, Wentworth town, Woodstock town
Merrimack County, NH	646	764	997	1231	1578	Allenstown town, Andover town, Boscawen town, Bow town, Bradford town, Canterbury town, Chichester town, Concord city, Danbury town, Dunbarton town, Epsom town, Franklin city, Henniker town, Hill town, Hooksett town, Hopkinton town, Loudon town, Newbury town, New London town, Northfield town, Pembroke town, Pittsfield town, Salisbury town, Sutton town, Warner town, Webster town, Wilmot town
Sullivan County, NH	547	663	844	1144	1236	Acworth town, Charlestown town, Claremont city, Cornish town, Croydon town, Goshen town, Grantham town, Langdon town, Lempster town, Newport town, Plainfield town, Springfield town, Sunapee town, Unity town, Washington town

NEW JERSEY

METROPOLITAN FMR AREAS	0 BR	1 BR	2 BR	3 BR	4 BR	Counties of FMR AREA within STATE
Atlantic City-Hammonton, NJ MSA	837	922	1100	1395	1564	Atlantic
*Bergen-Passaic, NJ HMFA	1195	1307	1494	1884	2281	Bergen, Passaic
Jersey City, NJ HMFA	976	1031	1203	1458	1570	Hudson
Middlesex-Somerset-Hunterdon, NJ HMFA	1188	1232	1449	1818	2145	Hunterdon, Middlesex, Somerset
Monmouth-Ocean, NJ HMFA	949	1097	1339	1745	1893	Monmouth, Ocean
Newark, NJ HMFA	883	1079	1233	1476	1632	Essex, Morris, Sussex, Union
Ocean City, NJ MSA	739	754	949	1243	1280	Cape May
*Philadelphia-Camden-Wilmington, PA-NJ-DE-MD MSA	789	900	1077	1317	1589	Burlington, Camden, Gloucester, Salem
Trenton-Ewing, NJ MSA	885	1018	1224	1463	1641	Mercer
Vineland-Millville-Bridgeton, NJ MSA	799	802	1010	1227	1293	Cumberland
Warren County, NJ HMFA	794	888	1039	1244	1280	Warren

NEW MEXICO

METROPOLITAN FMR AREAS	0 BR	1 BR	2 BR	3 BR	4 BR	Counties of FMR AREA within STATE
*Albuquerque, NM MSA	546	642	811	1181	1416	Bernalillo, Sandoval, Torrance, Valencia
Farmington, NM MSA	499	528	636	841	948	San Juan
Las Cruces, NM MSA	483	520	580	800	889	Dona Ana

SCHEDULE B - FY 2011 FINAL FAIR MARKET RENTS FOR EXISTING HOUSING PAGE 34

NEW MEXICO continued

METROPOLITAN FMR AREAS	0 BR	1 BR	2 BR	3 BR	4 BR	Counties of FMR AREA within STATE
Santa Fe, NM MSA	646	801	974	1275	1524	Santa Fe

NONMETROPOLITAN COUNTIES	0 BR	1 BR	2 BR	3 BR	4 BR	NONMETROPOLITAN COUNTIES	0 BR	1 BR	2 BR	3 BR	4 BR
Catron	391	440	527	768	791	Chaves	421	423	540	706	728
Cibola	439	473	527	766	832	Colfax	466	498	560	707	735
Curry	438	454	527	714	928	De Baca	438	451	527	711	865
Eddy	352	448	527	707	859	Grant	423	490	557	785	807
Guadalupe	516	523	623	782	816	Harding	438	451	527	711	865
Hidalgo	391	440	527	768	791	Lea	436	475	527	693	730
Lincoln	412	519	632	796	1110	Los Alamos	656	764	1003	1204	1240
Luna	437	475	527	672	807	McKinley	416	489	643	768	995
Mora	516	523	623	782	816	Otero	403	476	527	770	928
Quay	438	451	527	711	865	Rio Arriba	471	480	567	734	814
Roosevelt	437	448	527	730	903	San Miguel	441	475	585	777	903
Sierra	341	425	527	770	926	Socorro	438	440	527	631	894
Taos	627	681	754	903	930	Union	438	451	527	711	865

NEW YORK

METROPOLITAN FMR AREAS	0 BR	1 BR	2 BR	3 BR	4 BR	Counties of FMR AREA within STATE
Albany-Schenectady-Troy, NY MSA	711	737	900	1077	1177	Albany, Rensselaer, Saratoga, Schenectady, Schoharie
Binghamton, NY MSA	596	599	716	934	1096	Broome, Tioga
Buffalo-Niagara Falls, NY MSA	603	605	726	898	992	Erie, Niagara
Elmira, NY MSA	653	655	786	1010	1052	Chemung
Glens Falls, NY MSA	620	656	825	1041	1172	Warren, Washington
Ithaca, NY MSA	789	811	950	1150	1192	Tompkins
Kingston, NY MSA	764	828	992	1257	1561	Ulster
Nassau-Suffolk, NY HMFA	1218	1407	1661	2204	2402	Nassau, Suffolk
New York, NY HMFA	1166	1261	1403	1726	1941	Bronx, Kings, New York, Putnam, Queens, Richmond, Rockland
Poughkeepsie-Newburgh-Middletown, NY MSA	803	944	1156	1417	1510	Dutchess, Orange
Rochester, NY MSA	595	658	804	966	1023	Livingston, Monroe, Ontario, Orleans, Wayne
Syracuse, NY MSA	634	636	766	980	1062	Madison, Onondaga, Oswego
Utica-Rome, NY MSA	617	618	744	912	1036	Herkimer, Oneida
Westchester County, NY Statutory Exception Area	1125	1342	1561	1883	2321	Westchester

NONMETROPOLITAN COUNTIES	0 BR	1 BR	2 BR	3 BR	4 BR	NONMETROPOLITAN COUNTIES	0 BR	1 BR	2 BR	3 BR	4 BR
Allegany	568	571	684	852	1047	Cattaraugus	577	578	696	915	1050
Cayuga	619	620	744	990	1149	Chautauqua	584	587	704	908	992
Chenango	581	585	701	883	1231	Clinton	656	659	790	1003	1304
Columbia	716	731	862	1041	1110	Cortland	625	627	765	972	1193
Delaware	588	591	709	876	1154	Essex	618	620	744	990	1076
Franklin	566	567	678	871	963	Fulton	485	592	748	895	951
Genesee	676	677	814	1009	1142	Greene	619	668	814	1058	1153
Hamilton	623	625	750	935	1083	Jefferson	644	646	776	1000	1051

SCHEDULE B - FY 2011 FINAL FAIR MARKET RENTS FOR EXISTING HOUSING PAGE 35

NEW YORK continued

NONMETROPOLITAN COUNTIES	0 BR	1 BR	2 BR	3 BR	4 BR	NONMETROPOLITAN COUNTIES	0 BR	1 BR	2 BR	3 BR	4 BR
Lewis	575	578	693	867	967	Montgomery	575	617	693	877	949
Otsego	609	624	733	974	1013	St. Lawrence	575	577	694	879	960
Schuyler	627	630	755	1006	1040	Seneca	664	666	798	1050	1329
Steuben	612	613	737	946	1044	Sullivan	632	700	899	1076	1260
Wyoming	594	610	716	1042	1138	Yates	611	619	735	952	980

NORTH CAROLINA

METROPOLITAN FMR AREAS	0 BR	1 BR	2 BR	3 BR	4 BR	Counties of FMR AREA within STATE
Anson County, NC HMFA	496	533	596	838	884	Anson
Asheville, NC HMFA	504	589	672	900	1180	Buncombe, Henderson, Madison
Burlington, NC MSA	627	649	756	1027	1058	Alamance
Charlotte-Gastonia-Rock Hill, NC-SC HMFA	681	738	819	1032	1201	Cabarrus, Gaston, Mecklenburg, Union
Durham-Chapel Hill, NC HMFA	547	750	841	1099	1185	Chatham, Durham, Orange
Fayetteville, NC HMFA	571	618	690	980	1159	Cumberland
Goldsboro, NC MSA	441	524	613	767	1026	Wayne
Greene County, NC HMFA	495	496	596	842	870	Greene
Greensboro-High Point, NC HMFA	535	611	681	863	923	Guilford, Randolph
Greenville, NC HMFA	509	528	651	902	932	Pitt
Haywood County, NC HMFA	515	516	644	834	1079	Haywood
Hickory-Lenoir-Morganton, NC MSA	517	543	624	801	932	Alexander, Burke, Caldwell, Catawba
Hoke County, NC HMFA	529	575	637	872	1063	Hoke
Jacksonville, NC MSA	523	560	629	883	1037	Onslow
Pender County, NC HMFA	523	526	632	831	854	Pender
Person County, NC HMFA	524	526	634	757	868	Person
Raleigh-Cary, NC MSA	695	779	867	1090	1129	Franklin, Johnston, Wake
Rockingham County, NC HMFA	476	503	596	740	763	Rockingham
Rocky Mount, NC MSA	388	468	596	740	762	Edgecombe, Nash
Virginia Beach-Norfolk-Newport News, VA-NC MSA	800	834	965	1319	1590	Currituck
Wilmington, NC HMFA	602	664	802	1124	1156	Brunswick, New Hanover
Winston-Salem, NC MSA	491	559	648	883	1038	Davie, Forsyth, Stokes, Yadkin

NONMETROPOLITAN COUNTIES	0 BR	1 BR	2 BR	3 BR	4 BR	NONMETROPOLITAN COUNTIES	0 BR	1 BR	2 BR	3 BR	4 BR
Alleghany	443	520	596	782	806	Ashe	493	495	596	788	932
Avery	451	558	659	788	931	Beaufort	388	506	596	718	738
Bertie	408	518	596	713	735	Bladen	387	470	596	868	938
Camden	434	566	668	902	925	Carteret	536	537	645	939	1131
Caswell	491	492	602	736	768	Cherokee	387	502	596	866	1044
Chowan	434	566	668	902	925	Clay	495	497	596	782	911
Cleveland	576	577	694	914	1026	Columbus	417	537	596	714	735
Craven	491	560	642	865	1081	Dare	664	665	816	1079	1110
Davidson	504	505	609	794	907	Duplin	495	535	596	754	777
Gates	434	566	668	902	925	Graham	495	497	596	782	911
Granville	540	542	651	812	966	Halifax	388	538	596	758	870
Harnett	500	543	602	813	1057	Hertford	388	535	596	782	804

SCHEDULE B - FY 2011 FINAL FAIR MARKET RENTS FOR EXISTING HOUSING PAGE 36

NORTH CAROLINA continued

NONMETROPOLITAN COUNTIES	0 BR	1 BR	2 BR	3 BR	4 BR
Hyde	434	566	668	902	925
Jackson	508	526	626	822	848
Lee	429	587	662	814	1162
Lincoln	409	565	629	760	781
Macon	445	483	623	757	1093
Mitchell	451	558	659	788	931
Moore	539	540	680	978	1193
Pamlico	399	507	596	750	772
Perquimans	434	566	668	902	925
Richmond	429	537	596	749	772
Rowan	557	604	670	956	1021
Sampson	495	505	596	828	1049
Stanly	456	492	602	820	892
Swain	495	497	596	782	911
Tyrrell	434	566	668	902	925
Warren	498	500	599	732	753
Watauga	488	595	749	911	1176
Wilson	553	554	672	804	853

NONMETROPOLITAN COUNTIES	0 BR	1 BR	2 BR	3 BR	4 BR
Iredell	590	595	712	943	1231
Jones	495	535	640	886	1126
Lenoir	451	454	596	712	1023
McDowell	422	503	650	803	826
Martin	495	525	596	772	794
Montgomery	494	536	596	743	1047
Northampton	389	525	596	758	780
Pasquotank	430	555	660	958	987
Polk	544	545	669	836	862
Robeson	425	514	596	715	796
Rutherford	531	533	652	780	804
Scotland	485	486	616	748	933
Surry	445	536	596	796	819
Transylvania	495	688	762	962	1014
Vance	494	495	596	714	736
Washington	409	552	629	755	775
Wilkes	436	499	596	765	796
Yancey	493	495	596	712	733

NORTH DAKOTA

METROPOLITAN FMR AREAS	0 BR	1 BR	2 BR	3 BR	4 BR	Counties of FMR AREA within STATE
Bismarck, ND MSA	455	477	593	859	883	Burleigh, Morton
Fargo, ND-MN MSA	405	481	612	883	1021	Cass
Grand Forks, ND-MN MSA	418	525	644	816	1109	Grand Forks

NONMETROPOLITAN COUNTIES	0 BR	1 BR	2 BR	3 BR	4 BR
Adams	382	444	545	722	754
Benson	446	448	545	752	948
Bottineau	414	454	565	796	867
Burke	414	454	565	796	867
Dickey	446	448	545	752	948
Dunn	382	444	545	722	754
Emmons	414	454	565	796	867
Golden Valley	382	444	545	722	754
Griggs	446	448	545	752	948
Kidder	414	454	565	796	867
Logan	414	454	565	796	867
McIntosh	414	454	565	796	867
McLean	414	454	565	796	867
Mountrail	414	454	565	796	867
Oliver	382	444	545	722	754

NONMETROPOLITAN COUNTIES	0 BR	1 BR	2 BR	3 BR	4 BR
Barnes	452	455	545	762	958
Billings	382	444	545	722	754
Bowman	382	444	545	722	754
Cavalier	446	448	545	752	948
Divide	382	444	545	722	754
Eddy	446	448	545	752	948
Foster	446	448	545	752	948
Grant	382	444	545	722	754
Hettinger	382	444	545	722	754
LaMoure	446	448	545	752	948
McHenry	414	454	565	796	867
McKenzie	382	444	545	722	754
Mercer	382	444	545	722	754
Nelson	421	523	624	844	937
Pembina	421	523	624	844	937

SCHEDULE B - FY 2011 FINAL FAIR MARKET RENTS FOR EXISTING HOUSING PAGE 37

NORTH DAKOTA continued

NONMETROPOLITAN COUNTIES	0 BR	1 BR	2 BR	3 BR	4 BR
Pierce	414	454	565	796	867
Ransom	446	448	545	752	948
Richland	368	442	560	727	863
Sargent	446	448	545	752	948
Sioux	382	444	545	722	754
Stark	387	471	545	793	958
Stutsman	453	455	545	755	958
Traill	421	523	624	844	937
Ward	422	525	646	892	1059
Williams	355	433	545	718	761

NONMETROPOLITAN COUNTIES	0 BR	1 BR	2 BR	3 BR	4 BR
Ramsey	403	414	545	679	859
Renville	414	454	565	796	867
Rolette	414	454	565	796	867
Sheridan	414	454	565	796	867
Slope	382	444	545	722	754
Steele	421	523	624	844	937
Towner	446	448	545	752	948
Walsh	421	523	624	844	937
Wells	446	448	545	752	948

OHIO

METROPOLITAN FMR AREAS	0 BR	1 BR	2 BR	3 BR	4 BR	Counties of FMR AREA within STATE
Akron, OH MSA	498	582	745	948	977	Portage, Summit
Brown County, OH HMFA	448	470	620	800	964	Brown
Canton-Massillon, OH MSA	448	497	628	793	840	Carroll, Stark
Cincinnati-Middleton, OH-KY-IN HMFA	490	581	752	1007	1045	Butler, Clermont, Hamilton, Warren
Cleveland-Elyria-Mentor, OH MSA	515	598	720	923	981	Cuyahoga, Geauga, Lake, Lorain, Medina
Columbus, OH HMFA	530	616	779	980	1065	Delaware, Fairfield, Franklin, Licking, Madison, Morrow, Pickaway
Dayton, OH HMFA	508	580	714	961	1147	Greene, Miami, Montgomery
Huntington-Ashland, WV-KY-OH MSA	420	496	596	735	759	Lawrence
Lima, OH MSA	489	495	613	756	776	Allen
Mansfield, OH MSA	402	491	619	803	836	Richland
Parkersburg-Marietta-Vienna, WV-OH MSA	435	465	596	791	854	Washington
Preble County, OH HMFA	533	550	667	864	895	Preble
Sandusky, OH MSA	441	532	679	886	932	Erie
Springfield, OH MSA	493	548	660	853	1096	Clark
Steubenville-Weirton, OH-WV MSA	395	483	596	744	808	Jefferson
Toledo, OH MSA	470	523	647	835	910	Fulton, Lucas, Ottawa, Wood
Union County, OH HMFA	642	644	773	925	954	Union
Wheeling, WV-OH MSA	387	467	596	749	874	Belmont
Youngstown-Warren-Boardman, OH HMFA	462	519	627	789	851	Mahoning, Trumbull

NONMETROPOLITAN COUNTIES	0 BR	1 BR	2 BR	3 BR	4 BR
Adams	485	503	596	790	834
Ashtabula	432	508	647	822	958
Auglaize	438	471	617	802	824
Clinton	464	573	635	925	1086
Coshocton	415	500	596	771	879
Darke	387	495	596	793	817
Fayette	479	551	673	810	1081
Guernsey	419	517	596	787	809
Hardin	495	538	596	747	979
Henry	408	501	606	780	804

NONMETROPOLITAN COUNTIES	0 BR	1 BR	2 BR	3 BR	4 BR
Ashland	422	503	652	841	865
Athens	496	539	598	769	800
Champaign	417	509	642	792	851
Columbiana	478	504	609	753	915
Crawford	492	499	596	768	840
Defiance	452	517	628	792	965
Gallia	405	538	596	758	995
Hancock	447	523	678	922	979
Harrison	398	474	596	763	785
Highland	495	496	596	803	829

SCHEDULE B - FY 2011 FINAL FAIR MARKET RENTS FOR EXISTING HOUSING PAGE 38

OHIO continued

NONMETROPOLITAN COUNTIES	0 BR	1 BR	2 BR	3 BR	4 BR	NONMETROPOLITAN COUNTIES	0 BR	1 BR	2 BR	3 BR	4 BR
Hocking	386	538	596	850	875	Holmes	495	496	596	786	834
Huron	438	530	648	899	989	Jackson	505	508	608	729	751
Knox	527	531	637	815	934	Logan	543	549	653	821	848
Marion	432	545	666	844	1028	Meigs	495	537	596	817	841
Mercer	389	505	596	803	827	Monroe	495	496	596	732	818
Morgan	495	496	596	732	818	Muskingum	483	495	596	763	963
Noble	495	496	596	732	818	Paulding	438	479	596	778	802
Perry	495	496	596	746	767	Pike	389	500	598	716	745
Putnam	418	463	610	757	789	Ross	451	511	596	737	846
Sandusky	531	543	639	794	868	Scioto	477	499	596	783	936
Seneca	441	463	598	751	774	Shelby	497	508	661	825	914
Tuscarawas	400	468	617	781	805	Van Wert	387	464	596	725	749
Vinton	434	537	596	816	1016	Wayne	445	553	681	814	890
Williams	494	501	621	822	909	Wyandot	495	496	596	817	842

OKLAHOMA

METROPOLITAN FMR AREAS	0 BR	1 BR	2 BR	3 BR	4 BR	Counties of FMR AREA within STATE
Fort Smith, AR-OK HMFA	399	453	564	751	818	Sequoyah
Grady County, OK HMFA	407	453	564	763	876	Grady
Lawton, OK MSA	456	492	619	904	1088	Comanche
Le Flore County, OK HMFA	381	444	564	698	854	Le Flore
Lincoln County, OK HMFA	466	468	564	743	766	Lincoln
Oklahoma City, OK HMFA	529	577	701	946	1014	Canadian, Cleveland, Logan, McClain, Oklahoma
Okmulgee County, OK HMFA	381	428	564	765	813	Okmulgee
Pawnee County, OK HMFA	471	485	564	731	752	Pawnee
Tulsa, OK HMFA	518	563	688	909	938	Creek, Osage, Rogers, Tulsa, Wagoner

NONMETROPOLITAN COUNTIES	0 BR	1 BR	2 BR	3 BR	4 BR	NONMETROPOLITAN COUNTIES	0 BR	1 BR	2 BR	3 BR	4 BR
Adair	470	472	564	673	693	Alfalfa	470	486	564	766	790
Atoka	408	457	564	733	856	Beaver	470	486	564	766	790
Beckham	469	508	564	738	989	Blaine	470	486	564	766	790
Bryan	458	460	564	729	869	Caddo	388	429	564	675	844
Carter	497	530	600	746	799	Cherokee	455	490	567	712	819
Choctaw	466	505	564	800	823	Cimarron	470	486	564	766	790
Coal	408	457	564	733	856	Cotton	428	463	584	845	989
Craig	381	445	585	701	1028	Custer	435	437	564	807	831
Delaware	405	456	564	757	781	Dewey	470	486	564	766	790
Ellis	470	486	564	766	790	Garfield	464	488	587	813	836
Garvin	365	426	564	741	904	Grant	470	486	564	766	790
Greer	437	453	564	758	794	Harmon	437	453	564	758	794
Harper	470	486	564	766	790	Haskell	367	440	564	710	778
Hughes	456	519	619	789	811	Jackson	388	503	565	793	817
Jefferson	428	463	584	845	989	Johnston	408	457	564	733	856

SCHEDULE B - FY 2011 FINAL FAIR MARKET RENTS FOR EXISTING HOUSING PAGE 39

OKLAHOMA continued

NONMETROPOLITAN COUNTIES	0 BR	1 BR	2 BR	3 BR	4 BR
Kay	383	474	589	813	841
Kiowa	437	453	564	758	794
Love	408	457	564	733	856
McIntosh	417	472	565	707	802
Marshall	408	457	564	733	856
Murray	470	471	564	758	971
Noble	411	478	575	799	823
Okfuskee	456	519	619	789	811
Payne	498	571	700	991	1021
Pontotoc	396	443	564	769	793
Pushmataha	367	440	564	710	778
Seminole	366	452	564	677	698
Texas	439	525	592	749	896
Washington	466	467	569	797	877
Woods	418	448	564	820	845

NONMETROPOLITAN COUNTIES	0 BR	1 BR	2 BR	3 BR	4 BR
Kingfisher	470	486	564	792	815
Latimer	367	440	564	710	778
McCurtain	366	427	564	732	756
Major	470	486	564	766	790
Mayes	366	508	564	706	807
Muskogee	427	502	596	754	833
Nowata	430	455	564	752	849
Ottawa	471	472	564	769	793
Pittsburg	385	449	592	745	909
Pottawatomie	490	556	619	784	910
Roger Mills	437	453	564	758	794
Stephens	369	428	564	770	795
Tillman	428	463	584	845	989
Washita	437	453	564	758	794
Woodward	391	457	564	703	725

OREGON

METROPOLITAN FMR AREAS	0 BR	1 BR	2 BR	3 BR	4 BR	Counties of FMR AREA within STATE
Bend, OR MSA	572	664	792	1154	1190	Deschutes
Corvallis, OR MSA	537	651	811	1178	1355	Benton
Eugene-Springfield, OR MSA	523	634	803	1123	1250	Lane
Medford, OR MSA	529	629	790	1149	1183	Jackson
Portland-Vancouver-Hillsboro, OR-WA MSA	675	783	905	1318	1583	Clackamas, Columbia, Multnomah, Washington, Yamhill
Salem, OR MSA	536	595	712	1035	1248	Marion, Polk

NONMETROPOLITAN COUNTIES	0 BR	1 BR	2 BR	3 BR	4 BR
Baker	419	488	644	937	965
Coos	458	555	704	934	1076
Curry	517	595	702	1026	1238
Gilliam	485	568	686	930	1087
Harney	434	505	635	878	933
Jefferson	538	573	649	944	1062
Klamath	432	506	645	902	1002
Lincoln	538	614	783	1085	1225
Malheur	459	524	638	923	949
Sherman	485	568	686	930	1087
Umatilla	450	513	656	921	1027
Wallowa	426	496	655	937	1007
Wheeler	485	568	686	930	1087

NONMETROPOLITAN COUNTIES	0 BR	1 BR	2 BR	3 BR	4 BR
Clatsop	474	589	728	1053	1086
Crook	451	580	694	939	1099
Douglas	447	532	687	932	1153
Grant	485	568	686	930	1087
Hood River	487	602	750	1067	1101
Josephine	521	597	722	1027	1139
Lake	434	505	635	878	933
Linn	514	623	777	1071	1326
Morrow	485	568	686	930	1087
Tillamook	498	595	765	1069	1102
Union	430	501	661	964	992
Wasco	499	559	696	989	1224

SCHEDULE B - FY 2011 FINAL FAIR MARKET RENTS FOR EXISTING HOUSING PAGE 40

PENNSYLVANIA

METROPOLITAN FMR AREAS	0 BR	1 BR	2 BR	3 BR	4 BR	Counties of FMR AREA within STATE
Allentown-Bethlehem-Easton, PA HMFA	631	768	909	1176	1244	Carbon, Lehigh, Northampton
Altoona, PA MSA	471	516	624	817	844	Blair
Armstrong County, PA HMFA	488	531	587	751	986	Armstrong
Erie, PA MSA	465	525	678	811	922	Erie
Harrisburg-Carlisle, PA MSA	549	627	790	997	1033	Cumberland, Dauphin, Perry
Johnstown, PA MSA	470	478	587	739	846	Cambria
Lancaster, PA MSA	564	669	824	1046	1098	Lancaster
Lebanon, PA MSA	450	537	692	939	968	Lebanon
*Philadelphia-Camden-Wilmington, PA-NJ-DE-MD MSA	789	900	1077	1317	1589	Bucks, Chester, Delaware, Montgomery, Philadelphia
Pike County, PA HMFA	837	871	1009	1366	1673	Pike
Pittsburgh, PA HMFA	533	585	700	870	939	Allegheny, Beaver, Butler, Fayette, Washington, Westmoreland
Reading, PA MSA	557	622	767	1025	1058	Berks
Scranton--Wilkes-Barre, PA MSA	474	566	679	861	909	Lackawanna, Luzerne, Wyoming
Sharon, PA HMFA	492	514	627	768	844	Mercer
State College, PA MSA	645	719	847	1012	1044	Centre
Williamsport, PA MSA	456	524	631	829	852	Lycoming
York-Hanover, PA MSA	517	594	754	911	944	York

NONMETROPOLITAN COUNTIES	0 BR	1 BR	2 BR	3 BR	4 BR	NONMETROPOLITAN COUNTIES	0 BR	1 BR	2 BR	3 BR	4 BR
Adams	551	602	720	969	1075	Bedford	447	508	587	701	932
Bradford	382	512	587	734	899	Cameron	491	509	589	781	840
Clarion	488	530	587	749	783	Clearfield	447	494	587	842	993
Clinton	530	531	640	766	787	Columbia	473	519	632	808	958
Crawford	467	518	587	779	890	Elk	489	511	587	761	920
Forest	489	519	587	761	782	Franklin	457	519	655	862	1057
Fulton	392	499	587	724	846	Greene	487	519	587	701	722
Huntingdon	382	473	587	758	781	Indiana	523	544	629	751	821
Jefferson	399	494	587	777	801	Juniata	452	489	589	800	826
Lawrence	426	557	655	783	920	McKean	492	518	591	792	852
Mifflin	413	478	587	762	954	Monroe	600	740	925	1181	1322
Montour	525	602	693	829	855	Northumberland	403	526	587	727	753
Potter	488	529	587	778	800	Schuylkill	391	510	587	733	806
Snyder	408	536	630	788	851	Somerset	488	488	587	721	763
Sullivan	387	519	595	746	888	Susquehanna	477	519	608	731	806
Tioga	503	552	614	807	862	Union	563	587	678	891	959
Venango	451	492	587	741	841	Warren	382	490	587	762	807
Wayne	570	573	720	899	1014						

RHODE ISLAND

METROPOLITAN FMR AREAS	0 BR	1 BR	2 BR	3 BR	4 BR	Components of FMR AREA within STATE
Newport-Middleton-Portsmouth, RI HMFA	822	1003	1240	1684	2176	Newport County towns of Middletown town, Newport city, Portsmouth town
Providence-Fall River, RI-MA HMFA	762	848	977	1168	1440	Bristol County towns of Barrington town, Bristol town, Warren town

SCHEDULE B - FY 2011 FINAL FAIR MARKET RENTS FOR EXISTING HOUSING PAGE 41

RHODE ISLAND continued

METROPOLITAN FMR AREAS	0 BR	1 BR	2 BR	3 BR	4 BR	Components of FMR AREA within STATE
						Kent County towns of Coventry town, East Greenwich town, Warwick city, West Greenwich town, West Warwick town Newport County towns of Jamestown town, Little Compton town, Tiverton town Providence County towns of Burrillville town, Central Falls city, Cranston city, Cumberland town, East Providence city, Foster town, Glocester town, Johnston town, Lincoln town, North Providence town, North Smithfield town, Pawtucket city, Providence city, Scituate town, Smithfield town, Woonsocket city Washington County towns of Charlestown town, Exeter town, Narragansett town, North Kingstown town, Richmond town, South Kingstown town
Westerly-Hopkinton-New Shoreham, RI HMFA.....	697	876	1025	1225	1599	Washington County towns of Hopkinton town, New Shoreham town, Westerly town

SOUTH CAROLINA

METROPOLITAN FMR AREAS	0 BR	1 BR	2 BR	3 BR	4 BR	Counties of FMR AREA within STATE
Anderson, SC MSA.....	426	554	629	796	819	Anderson
Augusta-Richmond County, GA-SC MSA.....	516	560	629	842	886	Aiken, Edgefield
Charleston-North Charleston-Summerville, SC MSA...	667	739	836	1089	1268	Berkeley, Charleston, Dorchester
Charlotte-Gastonia-Rock Hill, NC-SC HMFA.....	681	738	819	1032	1201	York
Columbia, SC HMFA.....	612	666	743	918	947	Calhoun, Fairfield, Lexington, Richland, Saluda
Darlington County, SC HMFA.....	368	472	567	681	734	Darlington
Florence, SC HMFA.....	440	495	573	688	863	Florence
Greenville-Mauldin-Easley, SC MSA.....	529	574	639	843	867	Greenville, Pickens
Kershaw County, SC HMFA.....	415	522	642	807	937	Kershaw
Laurens County, SC HMFA.....	504	548	607	767	895	Laurens
Myrtle Beach-North Myrtle Beach-Conway, SC MSA....	630	693	809	967	1171	Horry
Spartanburg, SC MSA.....	546	565	660	830	855	Spartanburg
Sumter, SC MSA.....	489	531	588	756	800	Sumter

NONMETROPOLITAN COUNTIES	0 BR	1 BR	2 BR	3 BR	4 BR	NONMETROPOLITAN COUNTIES	0 BR	1 BR	2 BR	3 BR	4 BR
Abbeville.....	367	510	567	688	709	Allendale.....	472	510	567	704	910
Bamberg.....	471	472	567	756	778	Barnwell.....	469	494	567	683	883
Beaufort.....	667	803	908	1107	1176	Cherokee.....	465	466	568	680	721
Chester.....	487	488	585	699	743	Chesterfield.....	401	500	567	678	995
Clarendon.....	494	495	594	712	811	Colleton.....	368	459	567	802	823
Dillon.....	471	479	567	709	778	Georgetown.....	555	556	670	868	1048
Greenwood.....	499	522	600	871	898	Hampton.....	471	480	567	699	793
Jasper.....	520	565	629	750	851	Lancaster.....	384	484	567	780	858
Lee.....	387	475	567	697	873	McCormick.....	476	499	573	792	818
Marion.....	468	469	567	688	707	Marlboro.....	471	472	567	715	848
Newberry.....	469	510	567	721	887	Oconee.....	372	436	572	709	1007
Orangeburg.....	471	510	567	704	873	Union.....	471	472	567	783	879

SCHEDULE B - FY 2011 FINAL FAIR MARKET RENTS FOR EXISTING HOUSING PAGE 42

SOUTH CAROLINA continued

NONMETROPOLITAN COUNTIES	0 BR	1 BR	2 BR	3 BR	4 BR
Williamsburg	494	495	594	712	811

SOUTH DAKOTA

METROPOLITAN FMR AREAS	0 BR	1 BR	2 BR	3 BR	4 BR	Counties of FMR AREA within STATE
Meade County, SD HMFA	360	430	556	808	902	Meade
Rapid City, SD HMFA	507	592	745	986	1014	Pennington
Sioux City, IA-NE-SD MSA	435	511	671	845	870	Union
Sioux Falls, SD MSA	517	543	694	906	1003	Lincoln, McCook, Minnehaha, Turner

NONMETROPOLITAN COUNTIES	0 BR	1 BR	2 BR	3 BR	4 BR	NONMETROPOLITAN COUNTIES	0 BR	1 BR	2 BR	3 BR	4 BR
Aurora	356	414	545	698	746	Beadle	453	455	545	793	899
Bennett	411	427	545	729	811	Bon Homme	356	414	545	698	746
Brookings	355	446	548	773	963	Brown	399	427	563	714	849
Brule	356	414	545	698	746	Buffalo	356	414	545	698	746
Butte	411	427	545	729	811	Campbell	396	415	545	719	855
Charles Mix	356	414	545	698	746	Clark	365	424	545	737	869
Clay	415	442	581	801	1020	Codington	403	470	619	800	914
Corson	411	427	545	729	811	Custer	411	427	545	729	811
Davison	375	440	578	742	797	Day	396	415	545	719	855
Deuel	365	424	545	737	869	Dewey	411	427	545	729	811
Douglas	356	414	545	698	746	Edmunds	396	415	545	719	855
Fall River	404	421	553	717	798	Faulk	396	415	545	719	855
Grant	365	424	545	737	869	Gregory	356	414	545	698	746
Haakon	411	427	545	729	811	Hamlin	365	424	545	737	869
Hand	396	415	545	719	855	Hanson	356	414	545	698	746
Harding	411	427	545	729	811	Hughes	363	455	562	705	727
Hutchinson	356	414	545	698	746	Hyde	356	414	545	698	746
Jackson	411	427	545	729	811	Jerauld	396	415	545	719	855
Jones	411	427	545	729	811	Kingsbury	365	424	545	737	869
Lake	365	424	545	737	869	Lawrence	385	468	576	802	857
Lyman	356	414	545	698	746	McPherson	396	415	545	719	855
Marshall	396	415	545	719	855	Mellette	411	427	545	729	811
Miner	365	424	545	737	869	Moody	365	424	545	737	869
Perkins	411	427	545	729	811	Potter	411	427	545	729	811
Roberts	396	415	545	719	855	Sanborn	356	414	545	698	746
Shannon	411	427	545	729	811	Spink	396	415	545	719	855
Stanley	356	414	545	698	746	Sully	356	414	545	698	746
Todd	411	427	545	729	811	Tripp	356	414	545	698	746
Walworth	396	415	545	719	855	Yankton	383	454	590	773	795
Ziebach	411	427	545	729	811						

SCHEDULE B - FY 2011 FINAL FAIR MARKET RENTS FOR EXISTING HOUSING PAGE 43

TENNESSEE

METROPOLITAN FMR AREAS	0 BR	1 BR	2 BR	3 BR	4 BR	Counties of FMR AREA within STATE
Chattanooga, TN-GA MSA	577	610	718	884	1039	Hamilton, Marion, Sequatchie
Clarksville, TN-KY HMFA	549	571	663	959	987	Montgomery
Cleveland, TN MSA	472	482	621	779	990	Bradley, Polk
Hickman County, TN HMFA	373	519	575	838	864	Hickman
Jackson, TN MSA	508	554	700	937	963	Chester, Madison
Johnson City, TN MSA	393	475	589	732	912	Carter, Unicoi, Washington
Kingsport-Bristol-Bristol, TN-VA MSA	440	473	588	788	942	Hawkins, Sullivan
Knoxville, TN MSA	512	588	709	950	981	Anderson, Blount, Knox, Loudon, Union
Macon County, TN HMFA	360	438	554	660	733	Macon
Memphis, TN-MS-AR HMFA	628	682	758	1010	1041	Fayette, Shelby, Tipton
Morristown, TN MSA	461	463	556	729	822	Grainger, Hamblen, Jefferson
Nashville-Davidson--Murfreesboro--Franklin, TN MSA	627	716	823	1067	1099	Cannon, Cheatham, Davidson, Dickson, Robertson, Rutherford, Sumner, Trousdale, Williamson, Wilson
Smith County, TN HMFA	479	480	575	767	792	Smith
Stewart County, TN HMFA	360	469	554	756	779	Stewart

NONMETROPOLITAN COUNTIES	0 BR	1 BR	2 BR	3 BR	4 BR	NONMETROPOLITAN COUNTIES	0 BR	1 BR	2 BR	3 BR	4 BR
Bedford	442	541	680	851	877	Benton	426	427	540	667	733
Bledsoe	353	443	540	709	731	Campbell	448	450	540	696	828
Carroll	447	448	540	666	744	Claiborne	351	448	540	723	810
Clay	437	438	540	701	721	Cocke	352	435	540	647	881
Coffee	484	485	582	789	862	Crockett	449	487	540	704	727
Cumberland	447	448	540	766	947	Decatur	404	444	540	694	790
DeKalb	448	450	540	779	805	Dyer	365	429	562	749	818
Fentress	437	438	540	701	721	Franklin	371	445	572	832	1002
Gibson	442	453	540	678	750	Giles	381	448	591	711	732
Greene	350	442	540	732	752	Grundy	353	443	540	709	731
Hancock	448	449	540	691	832	Hardeman	390	484	540	731	948
Hardin	395	441	540	716	738	Haywood	454	470	615	735	807
Henderson	378	501	585	697	719	Henry	353	413	544	651	792
Houston	426	427	540	667	733	Humphreys	449	486	540	770	795
Jackson	437	438	540	701	721	Johnson	350	435	540	724	759
Lake	401	449	540	701	743	Lauderdale	474	475	572	695	718
Lawrence	372	417	540	668	762	Lewis	362	421	543	692	712
Lincoln	448	449	540	660	679	McMinn	476	478	574	687	915
McNairy	351	413	540	780	803	Marshall	437	464	608	731	917
Maury	466	581	717	913	940	Meigs	353	443	540	709	731
Monroe	427	428	543	649	829	Moore	475	476	569	751	775
Morgan	446	447	540	676	787	Obion	370	447	540	712	751
Overton	352	443	540	660	679	Perry	362	421	543	692	712
Pickett	437	438	540	701	721	Putnam	450	451	562	809	868
Rhea	350	432	540	717	738	Roane	475	490	569	761	781
Scott	448	457	540	715	951	Sevier	541	586	661	795	1161
Van Buren	437	438	540	701	721	Warren	438	443	570	764	909

SCHEDULE B - FY 2011 FINAL FAIR MARKET RENTS FOR EXISTING HOUSING PAGE 44

TENNESSEE continued

NONMETROPOLITAN COUNTIES	0 BR	1 BR	2 BR	3 BR	4 BR
Wayne	362	421	543	692	712
White	404	411	540	764	784
Weakley	392	482	540	790	952

TEXAS

METROPOLITAN FMR AREAS	0 BR	1 BR	2 BR	3 BR	4 BR	Counties of FMR AREA within STATE
Abilene, TX MSA	490	515	650	846	1071	Callahan, Jones, Taylor
Amarillo, TX MSA	500	541	676	932	1044	Armstrong, Carson, Potter, Randall
Aransas County, TX HMFA	447	554	660	962	991	Aransas
Atascosa County, TX HMFA	406	472	623	787	810	Atascosa
Austin County, TX HMFA	595	597	718	953	983	Austin
Austin-Round Rock-San Marcos, TX MSA	694	791	963	1296	1476	Bastrop, Caldwell, Hays, Travis, Williamson
Beaumont-Port Arthur, TX MSA	519	583	697	864	896	Hardin, Jefferson, Orange
Brazoria County, TX HMFA	585	652	749	1033	1109	Brazoria
Brownsville-Harlingen, TX MSA	457	528	605	748	845	Cameron
Calhoun County, TX HMFA	423	501	642	809	1083	Calhoun
College Station-Bryan, TX MSA	610	690	843	1068	1101	Brazos, Burleson, Robertson
Corpus Christi, TX HMFA	645	663	823	1130	1231	Nueces, San Patricio
***Dallas, TX HMFA	666	738	891	1160	1372	Collin, Dallas, Delta, Denton, Ellis, Hunt, Kaufman, Rockwall
El Paso, TX MSA	488	523	623	893	1060	El Paso
Fort Worth-Arlington, TX HMFA	673	716	871	1164	1289	Johnson, Parker, Tarrant
*Houston-Baytown-Sugar Land, TX HMFA	690	767	931	1241	1560	Chambers, Fort Bend, Galveston, Harris, Liberty, Montgomery, San Jacinto, Waller
Kendall County, TX HMFA	749	750	902	1313	1584	Kendall
Killeen-Temple-Fort Hood, TX HMFA	533	589	749	1090	1313	Bell, Coryell
Lampasas County, TX HMFA	387	493	595	868	1017	Lampasas
Laredo, TX MSA	514	563	674	881	1154	Webb
Longview, TX HMFA	546	574	659	902	928	Gregg, Upshur
Lubbock, TX MSA	473	577	728	1031	1064	Crosby, Lubbock
McAllen-Edinburg-Mission, TX MSA	509	560	660	791	909	Hidalgo
Medina County, TX HMFA	552	613	721	862	1049	Medina
Midland, TX MSA	588	637	838	1221	1446	Midland
Odessa, TX MSA	534	566	742	1069	1242	Ector
Rusk County, TX HMFA	509	510	612	733	754	Rusk
San Angelo, TX MSA	464	535	682	975	1066	Irion, Tom Green
San Antonio-New Braunfels, TX HMFA	613	682	842	1086	1319	Bandera, Bexar, Comal, Guadalupe, Wilson
Sherman-Denison, TX MSA	602	634	745	979	1132	Grayson
Texarkana, TX-Texarkana, AR MSA	510	515	634	773	841	Bowie
Tyler, TX MSA	546	641	722	989	1081	Smith
Victoria, TX HMFA	490	564	722	899	1064	Goliad, Victoria
Waco, TX MSA	596	597	742	929	959	McLennan
Wichita Falls, TX MSA	538	565	673	945	972	Archer, Clay, Wichita
Wise County, TX HMFA	555	557	669	817	909	Wise

NONMETROPOLITAN COUNTIES	0 BR	1 BR	2 BR	3 BR	4 BR
Anderson	531	556	641	844	1106
Angelina	508	578	647	837	864
Baylor	403	478	595	758	900
Andrews	493	507	595	797	890
Bailey	459	511	595	774	981
Bee	495	496	595	799	895

***: FMR areas designated by 3 asterisks (***) are part of the Small Area Demonstration Program and will use the FMRs found on Schedule B Addendum for operating the Section 8 voucher program. For all other programs area-wide FMRs should be used.

SCHEDULE B - FY 2011 FINAL FAIR MARKET RENTS FOR EXISTING HOUSING PAGE 45

TEXAS continued

NONMETROPOLITAN COUNTIES	0 BR	1 BR	2 BR	3 BR	4 BR
Blanco	473	508	642	843	966
Bosque	494	495	595	723	866
Briscoe	484	487	595	793	818
Brown	474	515	649	825	947
Camp	498	499	613	837	863
Castro	484	487	595	793	818
Childress	484	487	595	793	818
Coke	465	535	681	980	1068
Collingsworth	484	487	595	793	818
Comanche	482	517	612	779	850
Cooke	548	550	693	855	881
Crane	493	522	595	772	917
Culberson	493	522	595	772	917
Dawson	491	493	595	768	793
DeWitt	440	456	595	777	841
Dimmit	488	490	595	810	960
Duval	411	516	595	793	844
Edwards	488	490	595	810	960
Falls	392	535	602	768	797
Fayette	491	558	675	838	863
Floyd	459	511	595	774	981
Franklin	446	513	619	758	912
Frio	478	587	714	904	1075
Garza	459	511	595	774	981
Glasscock	491	493	595	768	793
Gray	460	461	595	747	771
Hale	400	506	595	729	814
Hamilton	473	508	642	843	966
Hardeman	403	478	595	758	900
Hartley	484	487	595	793	818
Hemphill	484	487	595	793	818
Hill	387	537	595	843	919
Hood	593	643	715	945	1254
Houston	573	615	690	826	894
Hudspeth	493	522	595	772	917
Jack	403	478	595	758	900
Jasper	494	496	595	736	851
Jim Hogg	494	531	595	850	947
Karnes	441	455	595	779	843
Kent	459	461	595	851	924
Kimble	491	493	595	768	793
Kinney	488	490	595	810	960

NONMETROPOLITAN COUNTIES	0 BR	1 BR	2 BR	3 BR	4 BR
Borden	491	493	595	768	793
Brewster	433	452	595	712	771
Brooks	494	531	595	850	947
Burnet	484	567	745	937	964
Cass	388	536	595	817	962
Cherokee	484	530	595	796	828
Cochran	459	511	595	774	981
Coleman	473	508	642	843	966
Colorado	475	525	595	786	808
Concho	491	493	595	768	793
Cottle	403	478	595	758	900
Crockett	491	493	595	768	793
Dallam	444	487	642	767	787
Deaf Smith	387	493	595	865	985
Dickens	459	511	595	774	981
Donley	484	487	595	793	818
Eastland	482	517	612	779	850
Erath	480	521	650	793	817
Fannin	516	520	620	773	796
Fisher	459	461	595	851	924
Foard	403	478	595	758	900
Freestone	392	535	602	787	811
Gaines	494	527	595	772	925
Gillespie	503	588	773	1071	1102
Gonzales	408	465	595	865	891
Grimes	528	579	645	840	865
Hall	484	487	595	793	818
Hansford	484	487	595	793	818
Harrison	477	480	632	817	841
Haskell	459	461	595	851	924
Henderson	484	501	659	864	891
Hockley	464	493	595	826	851
Hopkins	444	513	626	794	1099
Howard	493	497	595	835	859
Hutchinson	498	499	598	716	890
Jackson	387	501	595	725	1047
Jeff Davis	493	522	595	772	917
Jim Wells	398	535	595	791	816
Kenedy	494	531	595	850	947
Kerr	598	647	728	939	968
King	459	511	595	774	981
Kleberg	509	545	612	894	1077

SCHEDULE B - FY 2011 FINAL FAIR MARKET RENTS FOR EXISTING HOUSING PAGE 46

TEXAS continued

NONMETROPOLITAN COUNTIES	0 BR	1 BR	2 BR	3 BR	4 BR
Knox	403	478	595	758	900
Lamb	459	511	595	774	981
Lavaca	475	525	595	786	808
Leon	528	579	645	840	865
Lipscomb	484	487	595	793	818
Llano	615	619	814	974	1003
Lynn	459	511	595	774	981
McMullen	411	516	595	793	844
Marion	498	499	613	837	863
Mason	491	493	595	768	793
Maverick	496	497	595	865	891
Milam	387	478	595	770	818
Mitchell	459	461	595	851	924
Moore	420	516	595	866	892
Motley	459	511	595	774	981
Navarro	557	567	685	832	859
Nolan	462	463	595	767	1042
Oldham	484	487	595	793	818
Panola	495	536	595	724	1045
Pecos	491	536	595	721	873
Presidio	493	522	595	772	917
Reagan	491	493	595	768	793
Red River	446	513	619	758	912
Refugio	411	516	595	793	844
Runnels	491	493	595	768	793
San Augustine	493	494	595	774	1042
Schleicher	491	493	595	768	793
Shackelford	459	461	595	851	924
Sherman	484	487	595	793	818
Starr	494	538	595	868	1048
Sterling	491	493	595	768	793
Sutton	491	493	595	768	793
Terrell	493	522	595	772	917
Throckmorton	459	461	595	851	924
Trinity	573	615	690	826	894
Upton	491	493	595	768	793
Val Verde	423	507	598	744	867
Walker	589	629	761	979	1268
Washington	565	642	711	998	1030
Wheeler	484	487	595	793	818
Willacy	494	536	595	866	964
Wood	447	451	595	867	1043

NONMETROPOLITAN COUNTIES	0 BR	1 BR	2 BR	3 BR	4 BR
Lamar	447	517	649	818	914
La Salle	488	490	595	810	960
Lee	477	542	602	824	849
Limestone	387	538	595	762	788
Live Oak	411	516	595	793	844
Loving	493	522	595	772	917
McCulloch	494	496	595	866	894
Madison	528	579	645	840	865
Martin	491	493	595	768	793
Matagorda	387	509	595	867	1045
Menard	491	493	595	768	793
Mills	473	508	642	843	966
Montague	450	575	641	809	1124
Morris	446	513	619	758	912
Nacogdoches	482	604	712	850	1165
Newton	493	494	595	774	1042
Ochiltree	484	487	595	831	856
Palo Pinto	504	505	626	865	889
Parmer	484	487	595	793	818
Polk	494	501	595	712	733
Rains	501	503	625	843	868
Real	488	490	595	810	960
Reeves	494	527	595	763	925
Roberts	484	487	595	793	818
Sabine	493	494	595	774	1042
San Saba	473	508	642	843	966
Scurry	393	465	595	866	951
Shelby	494	496	595	855	1042
Somervell	482	517	612	782	850
Stephens	443	452	595	819	890
Stonewall	459	461	595	851	924
Swisher	484	487	595	793	818
Terry	458	510	595	782	979
Titus	466	552	655	787	1150
Tyler	494	495	595	766	992
Uvalde	388	528	595	775	1043
Van Zandt	525	528	645	902	928
Ward	494	500	595	741	880
Wharton	477	536	595	787	811
Wilbarger	386	461	595	764	852
Winkler	493	522	595	772	917
Yoakum	459	511	595	774	981

SCHEDULE B - FY 2011 FINAL FAIR MARKET RENTS FOR EXISTING HOUSING PAGE 47

TEXAS continued

NONMETROPOLITAN COUNTIES	0 BR	1 BR	2 BR	3 BR	4 BR
Young	388	452	595	755	878
Zavala	488	490	595	810	960
Zapata	494	531	595	850	947

UTAH

METROPOLITAN FMR AREAS	0 BR	1 BR	2 BR	3 BR	4 BR	Counties of FMR AREA within STATE
Logan, UT-ID MSA	502	542	677	908	1121	Cache
Ogden-Clearfield, UT MSA	518	623	767	1055	1247	Davis, Morgan, Weber
Provo-Orem, UT MSA	556	612	715	1040	1253	Juab, Utah
Salt Lake City, UT HMFA	630	685	826	1162	1353	Salt Lake
St. George, UT MSA	573	600	713	1037	1166	Washington
Summit County, UT HMFA	695	966	1073	1502	1882	Summit
Tooele County, UT HMFA	544	610	725	916	1270	Tooele

NONMETROPOLITAN COUNTIES	0 BR	1 BR	2 BR	3 BR	4 BR
Beaver	548	550	672	952	1013
Carbon	495	496	596	783	919
Duchesne	678	737	817	1055	1435
Garfield	548	550	672	952	1013
Iron	503	531	611	890	1074
Millard	548	550	672	952	1013
Rich	511	542	678	911	1106
Sanpete	548	550	672	952	1013
Uintah	584	635	704	924	1040
Wayne	548	550	672	952	1013
Box Elder	426	522	658	870	1012
Daggett	507	551	611	792	1074
Emery	507	551	611	792	1074
Grand	508	553	613	790	1076
Kane	548	550	672	952	1011
Piute	548	550	672	952	1013
San Juan	507	551	611	792	1074
Sevier	548	550	672	952	1013
Wasatch	567	663	873	1043	1253

VERMONT

METROPOLITAN FMR AREAS	0 BR	1 BR	2 BR	3 BR	4 BR	Components of FMR AREA within STATE
Burlington-South Burlington, VT MSA	862	954	1197	1532	1718	Chittenden County towns of Bolton town, Buels gore, Burlington city, Charlotte town, Colchester town, Essex town, Hinesburg town, Huntington town, Jericho town, Milton town, Richmond town, St. George town, Shelburne town, South Burlington city, Underhill town, Westford town, Williston town, Winooski city Franklin County towns of Bakersfield town, Berkshire town, Enosburg town, Fairfax town, Fairfield town, Fletcher town, Franklin town, Georgia town, Highgate town, Montgomery town, Richford town, St. Albans city, St. Albans town, Sheldon town, Swanton town Grand Isle County towns of Alburg town, Grand Isle town, Isle La Motte town, North Hero town, South Hero town

SCHEDULE B - FY 2011 FINAL FAIR MARKET RENTS FOR EXISTING HOUSING PAGE 48

VERMONT continued

NONMETROPOLITAN COUNTIES	0 BR	1 BR	2 BR	3 BR	4 BR	Towns within nonmetropolitan counties
Addison County, VT	621	777	935	1230	1640	Addison town, Bridport town, Bristol town, Cornwall town, Ferrisburg town, Goshen town, Granville town, Hancock town, Leicester town, Lincoln town, Middlebury town, Monkton town, New Haven town, Orwell town, Panton town, Ripton town, Salisbury town, Shoreham town, Starksboro town, Vergennes city, Waltham town, Weybridge town, Whiting town
Bennington County, VT	620	777	904	1178	1384	Arlington town, Bennington town, Dorset town, Glastenbury town, Landgrove town, Manchester town, Peru town, Pownal town, Readsboro town, Rupert town, Sandgate town, Searsburg town, Shaftsbury town, Stamford town, Sunderland town, Winhall town, Woodford town
Caledonia County, VT	585	608	763	966	1000	Barnet town, Burke town, Danville town, Groton town, Hardwick town, Kirby town, Lyndon town, Newark town, Peacham town, Ryegate town, St. Johnsbury town, Sheffield town, Stannard town, Sutton town, Walden town, Waterford town, Wheelock town
Essex County, VT	605	679	825	1052	1233	Averill town, Avery's gore, Bloomfield town, Brighton town, Brunswick town, Canaan town, Concord town, East Haven town, Ferdinand town, Granby town, Guildhall town, Lemington town, Lewis town, Lunenburg town, Maidstone town, Norton town, Victory town, Warner's grant, Warren's gore
Lamoille County, VT	611	734	855	1191	1501	Belvidere town, Cambridge town, Eden town, Elmore town, Hyde Park town, Johnson town, Morristown town, Stowe town, Waterville town, Wolcott town
Orange County, VT	653	738	859	1196	1233	Bradford town, Braintree town, Brookfield town, Chelsea town, Corinth town, Fairlee town, Newbury town, Orange town, Randolph town, Strafford town, Thetford town, Topsham town, Tunbridge town, Vershire town, Washington town, West Fairlee town, Williamstown town
Orleans County, VT	441	609	681	860	1081	Albany town, Barton town, Brownington town, Charleston town, Coventry town, Craftsbury town, Derby town, Glover town, Greensboro town, Holland town, Irasburg town, Jay town, Lowell town, Morgan town, Newport city, Newport town, Troy town, Westfield town, Westmore town
Rutland County, VT	559	732	851	1125	1440	Benson town, Brandon town, Castleton town, Chittenden town, Clarendon town, Danby town, Fair Haven town, Hubbardton town, Ira town, Killington town, Mendon town, Middletown Springs town, Mount Holly town, Mount Tabor town, Pawlet town, Pittsfield town, Pittsford town, Poultney town, Proctor town, Rutland city, Rutland town, Shrewsbury town, Sudbury town, Tinmouth town, Wallingford town, Wells town, West Haven town, West Rutland town
Washington County, VT	615	720	901	1217	1362	Barre city, Barre town, Berlin town, Cabot town, Calais town, Duxbury town, East Montpelier town, Fayston town, Marshfield town, Middlesex town, Montpelier city, Moretown town, Northfield town, Plainfield town, Roxbury town, Waitsfield town, Warren town, Waterbury town, Woodbury town, Worcester town
Windham County, VT	729	759	998	1206	1244	Athens town, Brattleboro town, Brookline town, Dover town,

SCHEDULE B - FY 2011 FINAL FAIR MARKET RENTS FOR EXISTING HOUSING PAGE 49

VERMONT continued

NONMETROPOLITAN COUNTIES	0 BR	1 BR	2 BR	3 BR	4 BR	Towns within nonmetropolitan counties
						Dummerston town, Grafton town, Guilford town, Halifax town, Jamaica town, Londonderry town, Marlboro town, Newfane town, Putney town, Rockingham town, Somerset town, Stratton town, Townshend town, Vernon town, Wardsboro town, Westminster town, Whitingham town, Wilmington town, Windham town
Windsor County, VT	686	768	904	1230	1464	Andover town, Baltimore town, Barnard town, Bethel town, Bridgewater town, Cavendish town, Chester town, Hartford town, Hartland town, Ludlow town, Norwich town, Plymouth town, Pomfret town, Reading town, Rochester town, Royalton town, Sharon town, Springfield town, Stockbridge town, Weathersfield town, Weston town, West Windsor town, Windsor town, Woodstock town

VIRGINIA

METROPOLITAN FMR AREAS	0 BR	1 BR	2 BR	3 BR	4 BR	Counties of FMR AREA within STATE
Blacksburg-Christiansburg-Radford, VA HMFA	573	627	702	963	1233	Montgomery, Radford city
Charlottesville, VA MSA	654	787	931	1207	1335	Albemarle, Fluvanna, Greene, Nelson, Charlottesville city
Danville, VA MSA	416	478	617	769	826	Pittsylvania, Danville city
Franklin County, VA HMFA	382	457	588	703	749	Franklin
Giles County, VA HMFA	383	496	588	750	1034	Giles
Harrisonburg, VA MSA	528	586	713	999	1026	Rockingham, Harrisonburg city
Kingsport-Bristol-Bristol, TN-VA MSA	440	473	588	788	942	Scott, Washington, Bristol city
Louisa County, VA HMFA	639	725	826	988	1017	Louisa
Lynchburg, VA MSA	528	542	653	805	899	Amherst, Appomattox, Bedford, Campbell, Bedford city, Lynchburg city
Pulaski County, VA HMFA	446	472	588	843	906	Pulaski
*Richmond, VA HMFA	791	857	958	1278	1526	Amelia, Caroline, Charles, Chesterfield, Cumberland, Dinwiddie, Goochland, Hanover, Henrico, King and Queen, King William, New Kent, Powhatan, Prince George, Sussex, Colonial Heights city, Hopewell city, Petersburg city, Richmond city
Roanoke, VA HMFA	524	558	721	915	999	Botetourt, Craig, Roanoke, Roanoke city, Salem city
Virginia Beach-Norfolk-Newport News, VA-NC MSA	800	834	965	1319	1590	Gloucester, Isle of Wight, James, Mathews, Surry, York, Chesapeake city, Hampton city, Newport News city, Norfolk city, Poquoson city, Portsmouth city, Suffolk city, Virginia Beach city, Williamsburg city
Warren County, VA HMFA	587	683	850	1195	1232	Warren
*Washington-Arlington-Alexandria, DC-VA-MD HMFA	1131	1289	1461	1885	2466	Arlington, Clarke, Fairfax, Fauquier, Loudoun, Prince William, Spotsylvania, Stafford, Alexandria city, Fairfax city, Falls Church city, Fredericksburg city, Manassas city, Manassas Park city
Winchester, VA-WV MSA	568	590	778	1074	1105	Frederick, Winchester city

VIRGINIA continued

NONMETROPOLITAN COUNTIES	0 BR	1 BR	2 BR	3 BR	4 BR
Accomack	402	550	619	752	926
Augusta	513	528	689	985	1133
Bland	490	507	588	750	833
Buchanan	490	507	588	750	833
Carroll	489	530	588	705	784
Culpeper	659	671	794	1027	1091
Essex	473	584	719	979	1009
Grayson	490	507	588	750	833
Halifax	382	531	588	790	1033
Highland	504	524	651	898	1085
Lancaster	472	581	708	871	937
Lunenburg	506	523	609	759	1051
Mecklenburg	385	481	593	728	970
Northampton	472	581	708	862	937
Nottoway	489	528	588	835	956
Page	400	467	613	791	815
Prince Edward	571	572	688	824	1102
Richmond	472	581	708	862	937
Russell	383	508	588	720	742
Smyth	486	528	588	747	967
Tazewell	490	491	588	755	854
Wise	489	499	588	765	964
Buena Vista city	470	528	588	856	1031
Covington city	382	490	588	714	745
Franklin city	426	589	653	808	1149
Lexington city	470	528	588	856	1031
Norton city	489	499	588	765	964
Waynesboro city	513	528	689	985	1133

NONMETROPOLITAN COUNTIES	0 BR	1 BR	2 BR	3 BR	4 BR
Alleghany	382	490	588	714	745
Bath	504	524	651	898	1085
Brunswick	506	523	609	759	1051
Buckingham	489	528	588	756	956
Charlotte	489	528	588	756	956
Dickenson	490	524	588	767	789
Floyd	541	588	652	907	1148
Greensville	507	550	610	737	915
Henry	453	472	588	754	864
King George	666	667	802	1166	1201
Lee	381	460	588	756	800
Madison	519	580	700	969	1000
Middlesex	472	581	708	862	937
Northumberland	472	581	708	862	937
Orange	471	647	721	1049	1265
Patrick	487	531	588	729	750
Rappahannock	519	580	700	969	1000
Rockbridge	470	528	588	856	1031
Shenandoah	484	519	634	846	937
Southampton	426	589	653	808	1149
Westmoreland	478	583	736	1010	1040
Wythe	382	484	588	771	1034
Clifton Forge city	382	490	588	714	745
Emporia city	507	550	610	737	915
Galax city	489	530	588	705	784
Martinsville city	453	472	588	754	864
Staunton city	513	528	689	985	1133

WASHINGTON

METROPOLITAN FMR AREAS	0 BR	1 BR	2 BR	3 BR	4 BR	Counties of FMR AREA within STATE
Bellingham, WA MSA	612	676	848	1237	1394	Whatcom
Bremerton-Silverdale, WA MSA	667	748	921	1318	1440	Kitsap
Kennewick-Pasco-Richland, WA MSA	539	588	738	998	1182	Benton, Franklin
Lewiston, ID-WA MSA	504	523	655	930	1133	Asotin
Longview, WA MSA	480	603	700	1020	1163	Cowlitz
Mount Vernon-Anacortes, WA MSA	614	760	943	1290	1610	Skagit
Olympia, WA MSA	628	705	901	1308	1582	Thurston
Portland-Vancouver-Hillsboro, OR-WA MSA	675	783	905	1318	1583	Clark, Skamania
Seattle-Bellevue, WA HMFA	857	977	1176	1662	2030	King, Snohomish
Spokane, WA MSA	474	555	731	1004	1138	Spokane
*Tacoma, WA HMFA	699	816	1018	1483	1669	Pierce
Wenatchee-East Wenatchee, WA MSA	558	591	747	1008	1160	Chelan, Douglas

SCHEDULE B - FY 2011 FINAL FAIR MARKET RENTS FOR EXISTING HOUSING PAGE 51

WASHINGTON continued

METROPOLITAN FMR AREAS	0 BR	1 BR	2 BR	3 BR	4 BR	Counties of FMR AREA within STATE
Yakima, WA MSA	515	604	782	1030	1086	Yakima

NONMETROPOLITAN COUNTIES	0 BR	1 BR	2 BR	3 BR	4 BR	NONMETROPOLITAN COUNTIES	0 BR	1 BR	2 BR	3 BR	4 BR
Adams	434	518	664	891	919	Clallam	548	607	789	1153	1188
Columbia	448	523	690	932	1112	Ferry	434	514	664	891	919
Garfield	448	523	690	932	1112	Grant	443	526	681	920	945
Grays Harbor	450	527	693	976	1003	Island	805	807	974	1417	1710
Jefferson	561	688	841	1223	1258	Kittitas	502	585	771	1033	1072
Klickitat	581	589	700	983	1012	Lewis	485	620	745	995	1041
Lincoln	434	514	664	891	919	Mason	546	642	770	1052	1246
Okanogan	486	585	688	941	1036	Pacific	476	513	672	953	991
Pend Oreille	434	514	664	891	919	San Juan	686	738	912	1311	1601
Stevens	432	520	664	910	993	Wahkiakum	483	600	701	1021	1171
Walla Walla	448	523	690	992	1023	Whitman	485	534	693	978	1198

WEST VIRGINIA

METROPOLITAN FMR AREAS	0 BR	1 BR	2 BR	3 BR	4 BR	Counties of FMR AREA within STATE
Boone County, WV HMFA	342	444	526	651	721	Boone
Charleston, WV HMFA	454	495	619	789	812	Clay, Kanawha, Lincoln, Putnam
Cumberland, MD-WV MSA	425	514	603	813	949	Mineral
Huntington-Ashland, WV-KY-OH MSA	420	496	596	735	759	Cabell, Wayne
Jefferson County, WV HMFA	526	709	808	1180	1420	Jefferson
Martinsburg, WV HMFA	525	592	711	951	1141	Berkeley, Morgan
Morgantown, WV MSA	476	495	586	760	901	Monongalia, Preston
Parkersburg-Marietta-Vienna, WV-OH MSA	435	465	596	791	854	Pleasants, Wirt, Wood
Steubenville-Weirton, OH-WV MSA	395	483	596	744	808	Brooke, Hancock
Wheeling, WV-OH MSA	387	467	596	749	874	Marshall, Ohio
Winchester, VA-WV MSA	568	590	778	1074	1105	Hampshire

NONMETROPOLITAN COUNTIES	0 BR	1 BR	2 BR	3 BR	4 BR	NONMETROPOLITAN COUNTIES	0 BR	1 BR	2 BR	3 BR	4 BR
Barbour	405	422	526	689	725	Braxton	405	422	526	689	725
Calhoun	383	456	554	720	827	Doddridge	362	462	545	656	776
Fayette	438	439	526	651	700	Gilmer	405	422	526	689	725
Grant	459	530	595	779	967	Greenbrier	418	476	526	632	832
Hardy	459	530	595	779	967	Harrison	451	452	543	680	760
Jackson	383	456	554	720	827	Lewis	414	449	526	660	679
Logan	367	446	526	646	664	McDowell	439	454	526	717	912
Marion	374	479	575	688	838	Mason	437	446	526	666	712
Mercer	437	453	526	711	901	Mingo	342	461	526	663	861
Monroe	437	474	526	655	678	Nicholas	437	474	526	669	732
Pendleton	458	528	596	778	965	Pocahontas	437	454	526	644	764
Raleigh	443	471	531	678	698	Randolph	413	414	534	689	709

SCHEDULE B - FY 2011 FINAL FAIR MARKET RENTS FOR EXISTING HOUSING PAGE 52

WEST VIRGINIA continued

NONMETROPOLITAN COUNTIES	0 BR	1 BR	2 BR	3 BR	4 BR	NONMETROPOLITAN COUNTIES	0 BR	1 BR	2 BR	3 BR	4 BR
Ritchie	383	456	554	720	827	Roane	383	456	554	720	827
Summers	437	474	526	655	678	Taylor	362	462	545	653	776
Tucker	405	422	526	689	725	Tyler	383	456	554	720	827
Upshur	342	427	526	706	729	Webster	437	454	526	644	764
Wetzel	343	468	526	670	762	Wyoming	439	454	526	717	912

WISCONSIN

METROPOLITAN FMR AREAS	0 BR	1 BR	2 BR	3 BR	4 BR	Counties of FMR AREA within STATE
Appleton, WI MSA	539	554	687	991	1019	Calumet, Outagamie
Columbia County, WI HMFA	512	598	787	1062	1096	Columbia
Duluth, MN-WI MSA	416	507	639	803	1022	Douglas
Eau Claire, WI MSA	425	508	635	860	896	Chippewa, Eau Claire
Fond du Lac, WI MSA	514	551	663	871	945	Fond du Lac
Green Bay, WI HMFA	529	542	682	959	988	Brown, Kewaunee
Iowa County, WI HMFA	493	575	757	905	930	Iowa
Janesville, WI MSA	505	590	735	962	990	Rock
Kenosha County, WI HMFA	653	680	844	1161	1335	Kenosha
La Crosse, WI-MN MSA	421	492	648	860	1056	La Crosse
Madison, WI HMFA	595	742	877	1177	1458	Dane
*Milwaukee-Waukesha-West Allis, WI MSA	608	725	866	1091	1124	Milwaukee, Ozaukee, Washington, Waukesha
Minneapolis-St. Paul-Bloomington, MN-WI MSA	646	761	924	1210	1359	Pierce, St. Croix
Oconto County, WI HMFA	443	537	596	772	804	Oconto
Oshkosh-Neenah, WI MSA	477	561	664	871	1129	Winnebago
Racine, WI MSA	518	606	760	945	1037	Racine
Sheboygan, WI MSA	428	550	649	802	985	Sheboygan
Wausau, WI MSA	425	530	654	873	965	Marathon

NONMETROPOLITAN COUNTIES	0 BR	1 BR	2 BR	3 BR	4 BR	NONMETROPOLITAN COUNTIES	0 BR	1 BR	2 BR	3 BR	4 BR
Adams	453	497	614	799	824	Ashland	460	462	596	758	1026
Barron	396	499	596	760	783	Bayfield	407	475	596	763	791
Buffalo	418	475	607	770	803	Burnett	407	475	596	763	791
Clark	385	455	596	815	839	Crawford	495	530	596	740	911
Dodge	599	600	723	915	988	Door	441	564	679	912	1023
Dunn	457	493	619	903	927	Florence	399	481	596	758	796
Forest	453	497	614	799	824	Grant	495	496	596	772	1046
Green	440	474	622	790	922	Green Lake	448	514	596	780	952
Iron	407	475	596	763	791	Jackson	418	475	607	770	803
Jefferson	515	603	794	951	1199	Juneau	396	488	609	801	826
Lafayette	440	464	596	763	855	Langlade	495	496	596	786	857
Lincoln	496	498	596	868	895	Manitowoc	400	469	617	738	918
Marinette	496	536	596	781	805	Marquette	463	519	631	813	902
Menominee	463	519	631	813	902	Monroe	413	482	635	806	880
Oneida	448	490	643	822	1132	Pepin	418	475	607	770	803

SCHEDULE B - FY 2011 FINAL FAIR MARKET RENTS FOR EXISTING HOUSING PAGE 53

WISCONSIN continued

NONMETROPOLITAN COUNTIES	0 BR	1 BR	2 BR	3 BR	4 BR	NONMETROPOLITAN COUNTIES	0 BR	1 BR	2 BR	3 BR	4 BR
Polk	457	534	702	863	891	Portage	525	532	635	841	865
Price	407	475	596	763	791	Richland	419	468	596	764	789
Rusk	407	475	596	763	791	Sauk	455	604	693	931	961
Sawyer	407	479	596	763	791	Shawano	410	484	596	744	855
Taylor	407	475	596	763	791	Trempealeau	468	470	596	814	839
Vernon	473	476	596	753	821	Vilas	453	497	614	836	861
Walworth	530	624	813	1015	1047	Washburn	407	475	596	763	791
Waupaca	406	510	620	810	834	Waushara	463	519	631	813	902
Wood	399	490	607	739	809						

WYOMING

METROPOLITAN FMR AREAS	0 BR	1 BR	2 BR	3 BR	4 BR	Counties of FMR AREA within STATE
Casper, WY MSA	466	510	645	938	1131	Natrona
Cheyenne, WY MSA	556	586	743	1011	1302	Laramie

NONMETROPOLITAN COUNTIES	0 BR	1 BR	2 BR	3 BR	4 BR	NONMETROPOLITAN COUNTIES	0 BR	1 BR	2 BR	3 BR	4 BR
Albany	506	580	736	1011	1070	Big Horn	502	525	628	820	981
Campbell	563	606	679	919	1002	Carbon	392	468	602	754	917
Converse	388	479	596	813	1048	Crook	502	525	628	820	981
Fremont	496	499	634	794	1012	Goshen	493	495	596	735	1011
Hot Springs	502	525	628	820	981	Johnson	503	524	646	820	981
Lincoln	554	586	667	890	1054	Niobrara	502	525	628	820	981
Park	470	540	635	798	1051	Platte	502	525	628	820	981
Sheridan	504	544	668	854	1043	Sublette	558	587	681	891	1056
Sweetwater	465	565	709	991	1029	Teton	863	962	1210	1595	1642
Uinta	482	608	693	947	1123	Washakie	502	525	628	820	981
Weston	502	525	628	820	981						

GUAM

NONMETROPOLITAN COUNTIES	0 BR	1 BR	2 BR	3 BR	4 BR	NONMETROPOLITAN COUNTIES	0 BR	1 BR	2 BR	3 BR	4 BR
Pacific Islands	781	838	1023	1491	1782						

PUERTO RICO

METROPOLITAN FMR AREAS	0 BR	1 BR	2 BR	3 BR	4 BR	Counties of FMR AREA within STATE
Aguadilla-Isabela-San Sebastián, PR MSA	364	396	439	564	632	Aguada, Aguadilla, Añasco, Isabela, Lares, Moca, Rincón, San Sebastián
Arecibo, PR HMFA	384	417	463	632	740	Arecibo, Camuy, Hatillo
Barranquitas-Aibonito-Quebradillas, PR HMFA	378	408	454	578	664	Aibonito, Barranquitas, Ciales, Maunabo, Orocovis, Quebradillas
Caguas, PR HMFA	422	456	508	704	848	Caguas, Cayey, Cidra, Gurabo, San Lorenzo

SCHEDULE B - FY 2011 FINAL FAIR MARKET RENTS FOR EXISTING HOUSING PAGE 54

PUERTO RICO continued

METROPOLITAN FMR AREAS	0 BR	1 BR	2 BR	3 BR	4 BR	Counties of FMR AREA within STATE
Fajardo, PR MSA	437	476	528	768	926	Ceiba, Fajardo, Luquillo
Guayama, PR MSA	385	416	463	657	814	Arroyo, Guayama, Patillas
Mayagüez, PR MSA	413	448	498	595	822	Hormigueros, Mayagüez
Ponce, PR MSA	446	484	536	745	849	Juana Díaz, Ponce, Villalba
San Germán-Cabo Rojo, PR MSA	360	374	433	566	611	Cabo Rojo, Lajas, Sabana Grande, San Germán
San Juan-Guaynabo, PR HMFA	463	502	558	739	874	Aguas Buenas, Barceloneta, Bayamón, Canóvanas, Carolina, Cataño, Comerío, Corozal, Dorado, Florida, Guaynabo, Humacao, Juncos, Las Piedras, Loíza, Manatí, Morovis, Naguabo, Naranjito, Río Grande, San Juan, Toa Alta, Toa Baja, Trujillo Alto, Vega Alta, Vega Baja, Yabucoa
Yauco, PR MSA	356	376	428	539	687	Guánica, Guayanilla, Peñuelas, Yauco

NONMETROPOLITAN COUNTIES	0 BR	1 BR	2 BR	3 BR	4 BR	NONMETROPOLITAN COUNTIES	0 BR	1 BR	2 BR	3 BR	4 BR
Adjuntas	355	384	428	586	636	Coamo	355	384	428	586	636
Culebra	355	384	428	586	636	Jayuya	355	384	428	586	636
Las Marías	355	384	428	586	636	Maricao	355	384	428	586	636
Salinas	355	384	428	586	636	Santa Isabel	355	384	428	586	636
Utuado	355	384	428	586	636	Vieques	355	384	428	586	636

VIRGIN ISLANDS

NONMETROPOLITAN COUNTIES	0 BR	1 BR	2 BR	3 BR	4 BR	NONMETROPOLITAN COUNTIES	0 BR	1 BR	2 BR	3 BR	4 BR
St. Croix	571	595	721	901	1030	St. John	649	775	998	1237	1292
St. Thomas	649	775	998	1237	1292						

Note1: The FMRs for unit sizes larger than 4 BRs are calculated by adding 15% to the 4 BR FMR for each extra bedroom.
Note2: 50th percentile FMRs are indicated by an * before the FMR Area name.

09/20/2010

Schedule B: Addendum:

Small Area Rents for Dallas, TX HMFA

County	ZIP	0 BR	1 BR	2 BR	3 BR	4 BR
Collin County	**75002**	**870**	**960**	**1,160**	**1,510**	**1,790**
	75009	820	900	1,090	1,420	1,680
	75013	820	900	1,090	1,420	1,680
	75023	970	1,080	1,300	1,690	2,000
	75024	950	1,050	1,270	1,650	1,960
	75025	890	980	1,190	1,550	1,830
	75034	790	880	1,060	1,380	1,630
	75035	820	900	1,090	1,420	1,680
	75048	680	750	910	1,180	1,400
	75069	670	740	890	1,160	1,370
	75070	790	870	1,050	1,370	1,620
	75071	820	900	1,090	1,420	1,680
	75074	810	890	1,080	1,410	1,660
	75075	820	900	1,090	1,420	1,680
	75078	820	900	1,090	1,420	1,680
	75080	850	930	1,130	1,470	1,740
	75082	810	890	1,080	1,410	1,660
	75093	910	1,000	1,210	1,580	1,860
	75094	820	900	1,090	1,420	1,680
	75098	700	780	940	1,220	1,450
	75121	820	900	1,090	1,420	1,680
	75164	820	900	1,090	1,420	1,680
	75166	820	900	1,090	1,420	1,680
	75173	820	900	1,090	1,420	1,680
	75189	690	760	920	1,200	1,420
	75248	790	870	1,050	1,370	1,620
	75252	700	780	940	1,220	1,450
	75287	760	840	1,020	1,330	1,570
	75407	820	900	1,090	1,420	1,680
	75409	820	900	1,090	1,420	1,680
	75424	820	900	1,090	1,420	1,680
	75442	800	880	1,070	1,390	1,650
	75452	660	730	880	1,150	1,360
	75454	820	900	1,090	1,420	1,680
	75491	820	900	1,090	1,420	1,680
	75495	820	900	1,090	1,420	1,680
Dallas County	**75001**	**840**	**930**	**1,120**	**1,460**	**1,730**
	75006	730	810	980	1,280	1,510
	75007	860	950	1,150	1,500	1,770
	75019	970	1,080	1,300	1,690	2,000
	75038	740	820	990	1,290	1,530
	75039	970	1,070	1,290	1,680	1,990
	75040	730	800	970	1,260	1,490
	75041	630	690	840	1,090	1,290
	75042	630	690	840	1,090	1,290

75043	710	790	950	1,240	1,460
75044	840	930	1,120	1,460	1,730
75047	670	740	890	1,160	1,370
75048	680	750	910	1,180	1,400
75050	670	740	890	1,160	1,370
75051	590	650	790	1,030	1,220
75052	750	830	1,000	1,300	1,540
75060	660	730	880	1,150	1,360
75061	640	710	860	1,120	1,330
75062	700	780	940	1,220	1,450
75063	880	970	1,170	1,520	1,800
75080	850	930	1,130	1,470	1,740
75081	820	900	1,090	1,420	1,680
75082	810	890	1,080	1,410	1,660
75088	680	750	910	1,180	1,400
75089	670	740	900	1,170	1,390
75098	700	780	940	1,220	1,450
75104	770	850	1,030	1,340	1,590
75115	700	780	940	1,220	1,450
75116	720	790	960	1,250	1,480
75125	610	680	820	1,070	1,260
75134	680	750	910	1,180	1,400
75137	850	930	1,130	1,470	1,740
75141	670	740	890	1,160	1,370
75146	690	760	920	1,200	1,420
75149	680	750	910	1,180	1,400
75150	730	800	970	1,260	1,490
75154	710	790	950	1,240	1,460
75159	670	740	890	1,160	1,370
75172	670	740	890	1,160	1,370
75180	650	720	870	1,130	1,340
75181	670	740	890	1,160	1,370
75182	670	740	890	1,160	1,370
75201	1,010	1,120	1,350	1,760	2,080
75202	670	740	890	1,160	1,370
75203	480	530	640	830	990
75204	790	880	1,060	1,380	1,630
75205	930	1,030	1,240	1,610	1,910
75206	700	780	940	1,220	1,450
75207	670	740	890	1,160	1,370
75208	530	590	710	920	1,090
75209	650	720	870	1,130	1,340
75210	480	530	640	830	990
75211	580	640	770	1,000	1,190
75212	480	530	640	830	990
75214	680	750	910	1,180	1,400
75215	440	490	590	770	910
75216	540	600	720	940	1,110
75217	590	650	790	1,030	1,220
75218	720	790	960	1,250	1,480

	75219	640	700	850	1,110	1,310
	75220	580	640	770	1,000	1,190
	75221	670	740	890	1,160	1,370
	75223	550	610	740	960	1,140
	75224	540	600	720	940	1,110
	75225	1,010	1,120	1,350	1,760	2,080
	75226	920	1,020	1,230	1,600	1,900
	75227	600	660	800	1,040	1,230
	75228	610	670	810	1,050	1,250
	75229	640	710	860	1,120	1,330
	75230	690	760	920	1,200	1,420
	75231	550	610	740	960	1,140
	75232	520	580	700	910	1,080
	75233	640	710	860	1,120	1,330
	75234	720	790	960	1,250	1,480
	75235	600	660	800	1,040	1,230
	75236	650	720	870	1,130	1,340
	75237	590	650	790	1,030	1,220
	75238	610	680	820	1,070	1,260
	75240	730	800	970	1,260	1,490
	75241	580	640	770	1,000	1,190
	75242	670	740	890	1,160	1,370
	75243	670	740	890	1,160	1,370
	75244	740	820	990	1,290	1,530
	75246	500	550	670	870	1,030
	75247	670	740	890	1,160	1,370
	75248	790	870	1,050	1,370	1,620
	75249	670	740	890	1,160	1,370
	75251	670	740	890	1,160	1,370
	75252	700	780	940	1,220	1,450
	75253	580	650	780	1,020	1,200
	75254	670	740	890	1,160	1,370
Delta County	**75415**	**440**	**490**	**590**	**770**	**910**
	75432	440	490	590	770	910
	75448	440	490	590	770	910
	75450	440	490	590	770	910
	75469	440	490	590	770	910
Denton County	**75007**	**860**	**950**	**1,150**	**1,500**	**1,770**
	75009	820	900	1,090	1,420	1,680
	75010	910	1,010	1,220	1,590	1,880
	75022	740	820	990	1,290	1,530
	75028	740	820	990	1,290	1,530
	75034	790	880	1,060	1,380	1,630
	75056	1,000	1,100	1,330	1,730	2,050
	75057	790	880	1,060	1,380	1,630
	75065	740	820	990	1,290	1,530
	75067	790	880	1,060	1,380	1,630
	75068	740	820	990	1,290	1,530

	75077	740	820	990	1,290	1,530
	75078	820	900	1,090	1,420	1,680
	75093	910	1,000	1,210	1,580	1,860
	75287	760	840	1,020	1,330	1,570
	76052	650	720	870	1,130	1,340
	76201	600	660	800	1,040	1,230
	76204	740	820	990	1,290	1,530
	76205	700	780	940	1,220	1,450
	76207	710	790	950	1,240	1,460
	76208	740	820	990	1,290	1,530
	76209	740	820	990	1,290	1,530
	76210	740	820	990	1,290	1,530
	76226	740	820	990	1,290	1,530
	76227	740	820	990	1,290	1,530
	76234	520	570	690	900	1,060
	76247	740	820	990	1,290	1,530
	76249	740	820	990	1,290	1,530
	76258	740	820	990	1,290	1,530
	76259	740	820	990	1,290	1,530
	76262	730	810	980	1,280	1,510
	76266	740	820	990	1,290	1,530
	76272	740	820	990	1,290	1,530
Ellis County	**75101**	**610**	**670**	**810**	**1,050**	**1,250**
	75119	580	640	770	1,000	1,190
	75120	610	670	810	1,050	1,250
	75125	610	680	820	1,070	1,260
	75152	610	670	810	1,050	1,250
	75154	710	790	950	1,240	1,460
	75165	640	700	850	1,110	1,310
	75167	610	670	810	1,050	1,250
	76041	610	670	810	1,050	1,250
	76050	570	630	760	990	1,170
	76055	610	670	810	1,050	1,250
	76064	610	670	810	1,050	1,250
	76065	610	670	810	1,050	1,250
	76084	580	640	770	1,000	1,190
	76651	610	670	810	1,050	1,250
	76670	610	670	810	1,050	1,250
Hunt County	**75135**	**500**	**550**	**670**	**870**	**1,030**
	75169	510	560	680	890	1,050
	75189	690	760	920	1,200	1,420
	75401	490	540	650	850	1,000
	75402	580	650	780	1,020	1,200
	75422	500	550	670	870	1,030
	75423	500	550	670	870	1,030
	75428	450	500	600	780	920
	75442	800	880	1,070	1,390	1,650
	75449	500	550	670	870	1,030

	75452	660	730	880	1,150	1,360
	75453	500	550	670	870	1,030
	75474	500	550	670	870	1,030
	75496	500	550	670	870	1,030
Kaufman County	**75114**	**560**	**620**	**750**	**980**	**1,160**
	75126	560	620	750	980	1,160
	75142	560	620	750	980	1,160
	75143	560	620	750	980	1,160
	75147	560	620	750	980	1,160
	75156	560	620	750	980	1,160
	75157	560	620	750	980	1,160
	75158	560	620	750	980	1,160
	75159	670	740	890	1,160	1,370
	75160	580	650	780	1,020	1,200
	75161	560	620	750	980	1,160
	75169	510	560	680	890	1,050
Rockwall County	**75032**	**730**	**810**	**980**	**1,280**	**1,510**
	75087	700	780	940	1,220	1,450
	75088	680	750	910	1,180	1,400
	75089	670	740	900	1,170	1,390
	75098	700	780	940	1,220	1,450
	75132	730	810	980	1,280	1,510
	75189	690	760	920	1,200	1,420

SCHEDULE D - FY 2011 FAIR MARKET RENTS FOR MANUFACTURED HOME SPACES IN THE SECTION 8 HOUSING CHOICE VOUCHER PROGRAM

State	Area Name	Space Rent
California	Los Angeles-Long Beach, CA HUD Metro FMR A	$648
	Orange County, CA HUD Metro FMR Area	$787
	Riverside-San Bernardino-Ontario, CA MSA	$509
	San Diego-Carlsbad-San Marcos, CA MSA	$795
	Santa Rosa-Petaluma, CA MSA	$689
	Vallejo-Fairfield, CA MSA	$554
Colorado	Boulder, CO MSA	$445
Maryland	St. Mary's County	$480
Oregon	Bend, OR MSA	$347
	Salem, OR MSA	$472
Pennsylvania	Adams County	$535
Washington	Olympia, WA MSA	$580
	Seattle-Bellevue, WA HUD Metro FMR Area	$639
West Virginia	Logan County	$435
	McDowell County	$435
	Mercer County	$435
	Mingo County	$435
	Wyoming County	$435

[FR Doc. 2010–24465 Filed 9–28–10; 11:15 am]

BILLING CODE 4210–67–C

Reader Aids

Federal Register

Vol. 75, No. 191

Monday, October 4, 2010

CUSTOMER SERVICE AND INFORMATION

Federal Register/Code of Federal Regulations	
General Information, indexes and other finding aids	**202–741–6000**
Laws	**741–6000**
Presidential Documents	
Executive orders and proclamations	**741–6000**
The United States Government Manual	**741–6000**
Other Services	
Electronic and on-line services (voice)	**741–6020**
Privacy Act Compilation	**741–6064**
Public Laws Update Service (numbers, dates, etc.)	**741–6043**
TTY for the deaf-and-hard-of-hearing	**741–6086**

ELECTRONIC RESEARCH

World Wide Web

Full text of the daily Federal Register, CFR and other publications is located at: **http://www.gpoaccess.gov/nara/index.html**

Federal Register information and research tools, including Public Inspection List, indexes, and links to GPO Access are located at: **http://www.archives.gov/federal__register**

E-mail

FEDREGTOC-L (Federal Register Table of Contents LISTSERV) is an open e-mail service that provides subscribers with a digital form of the Federal Register Table of Contents. The digital form of the Federal Register Table of Contents includes HTML and PDF links to the full text of each document.

To join or leave, go to **http://listserv.access.gpo.gov** and select *Online mailing list archives, FEDREGTOC-L, Join or leave the list (or change settings);* then follow the instructions.

PENS (Public Law Electronic Notification Service) is an e-mail service that notifies subscribers of recently enacted laws.

To subscribe, go to **http://listserv.gsa.gov/archives/publaws-l.html** and select *Join or leave the list (or change settings);* then follow the instructions.

FEDREGTOC-L and **PENS** are mailing lists only. We cannot respond to specific inquiries.

Reference questions. Send questions and comments about the Federal Register system to: **fedreg.info@nara.gov**

The Federal Register staff cannot interpret specific documents or regulations.

Reminders. Effective January 1, 2009, the Reminders, including Rules Going Into Effect and Comments Due Next Week, no longer appear in the Reader Aids section of the Federal Register. This information can be found online at **http://www.regulations.gov.**

CFR Checklist. Effective January 1, 2009, the CFR Checklist no longer appears in the Federal Register. This information can be found online at **http://bookstore.gpo.gov/.**

FEDERAL REGISTER PAGES AND DATE, OCTOBER

60567–61034 1
61034–61320 4

CFR PARTS AFFECTED DURING OCTOBER

At the end of each month, the Office of the Federal Register publishes separately a List of CFR Sections Affected (LSA), which lists parts and sections affected by documents published since the revision date of each title.

3 CFR

Executive Orders:
13553 60567
Administrative Orders:
Memorandums:
Memorandum of September 29, 2010 61033

5 CFR

870 60573
Proposed Rules:
831 60643
841 60643
842 60643

7 CFR

Proposed Rules:
1217 ..... 61002, 61025

9 CFR

77 60586

12 CFR

25 61035
228 61035
345 61035
563e 61035
Proposed Rules:
704 60651

13 CFR

123 60588

14 CFR

39 ..... 60602, 60604, 60608, 60611, 60614, 61046
Proposed Rules:
39 ..... 60655, 60659, 60661, 60665, 60667, 60669, 61114

15 CFR

902 60868

17 CFR

241 60616
243 61050

18 CFR

806 60617
808 60617

19 CFR

Proposed Rules:
210 60671

22 CFR

Proposed Rules:
62 60674

30 CFR

201 61051
202 61051
203 61051
204 61051
206 61051
207 61051
208 61051
210 61051
212 61051
217 61051
218 61051
219 61051
220 61051
227 61051
228 61051
229 61051
241 61051
243 61051
290 61051
1201 61051
1202 61051
1203 61051
1204 61051
1206 61051
1207 61051
1208 61051
1210 61051
1212 61051
1217 61051
1218 61051
1219 61051
1220 61051
1227 61051
1228 61051
1229 61051
1241 61051
1243 61051
1290 61051

33 CFR

117 61094
165 ..... 61096, 61099

37 CFR

Proposed Rules:
201 61116

40 CFR

52 60623
261 60632
Proposed Rules:
81 60680
261 60689

42 CFR

412 60640
413 60640
415 60640
424 60640
440 60640
441 60640
482 60640
485 60640
489 60640

47 CFR

79.....61101

48 CFR

Proposed Rules:
216.....60690
252.....60690

50 CFR

660.....60868, 61102
Proposed Rules:
21.....60691
217.....60694
660.....60709

LIST OF PUBLIC LAWS

This is a continuing list of public bills from the current session of Congress which have become Federal laws. It may be used in conjunction with "P L U S" (Public Laws Update Service) on 202–741–6043. This list is also available online at *http://www.archives.gov/federal-register/laws.html*.

The text of laws is not published in the **Federal Register** but may be ordered in "slip law" (individual pamphlet) form from the Superintendent of Documents, U.S. Government Printing Office, Washington, DC 20402 (phone, 202–512–1808). The text will also be made available on the Internet from GPO Access at *http://www.gpoaccess.gov/plaws/index.html*. Some laws may not yet be available.

H.R. 5297/P.L. 111–240

Small Business Jobs Act of 2010 (Sept. 27, 2010; 124 Stat. 2504)

Last List September 29, 2010

Public Laws Electronic Notification Service (PENS)

PENS is a free electronic mail notification service of newly enacted public laws. To subscribe, go to *http://listserv.gsa.gov/archives/publaws-l.html*

Note: This service is strictly for E-mail notification of new laws. The text of laws is not available through this service. **PENS** cannot respond to specific inquiries sent to this address.