Federal Register

10–19–10 Tuesday
Vol. 75 No. 201 Oct. 19, 2010

Pages 64111–64614

The **FEDERAL REGISTER** (ISSN 0097–6326) is published daily, Monday through Friday, except official holidays, by the Office of the Federal Register, National Archives and Records Administration, Washington, DC 20408, under the Federal Register Act (44 U.S.C. Ch. 15) and the regulations of the Administrative Committee of the Federal Register (1 CFR Ch. I). The Superintendent of Documents, U.S. Government Printing Office, Washington, DC 20402 is the exclusive distributor of the official edition. Periodicals postage is paid at Washington, DC.

The **FEDERAL REGISTER** provides a uniform system for making available to the public regulations and legal notices issued by Federal agencies. These include Presidential proclamations and Executive Orders, Federal agency documents having general applicability and legal effect, documents required to be published by act of Congress, and other Federal agency documents of public interest.

Documents are on file for public inspection in the Office of the Federal Register the day before they are published, unless the issuing agency requests earlier filing. For a list of documents currently on file for public inspection, see *www.federalregister.gov.*

The seal of the National Archives and Records Administration authenticates the Federal Register as the official serial publication established under the Federal Register Act. Under 44 U.S.C. 1507, the contents of the **Federal Register** shall be judicially noticed.

The **Federal Register** is published in paper and on 24x microfiche. It is also available online at no charge as one of the databases on GPO Access, a service of the U.S. Government Printing Office.

The online edition of the **Federal Register**, *www.gpoaccess.gov/nara,* available through GPO Access, is issued under the authority of the Administrative Committee of the Federal Register as the official legal equivalent of the paper and microfiche editions (44 U.S.C. 4101 and 1 CFR 5.10). It is updated by 6 a.m. each day the **Federal Register** is published and includes both text and graphics from Volume 59, Number 1 (January 2, 1994) forward.

For more information about GPO Access, contact the GPO Access User Support Team, call toll free 1-888-293-6498; DC area 202-512-1530; fax at 202-512-1262; or via e-mail at *gpoaccess@gpo.gov.* The Support Team is available between 7:00 a.m. and 9:00 p.m. Eastern Time, Monday–Friday, except official holidays.

The annual subscription price for the **Federal Register** paper edition is $749 plus postage, or $808, plus postage, for a combined **Federal Register, Federal Register** Index and List of CFR Sections Affected (LSA) subscription; the microfiche edition of the **Federal Register** including the **Federal Register** Index and LSA is $165, plus postage. Six month subscriptions are available for one-half the annual rate. The prevailing postal rates will be applied to orders according to the delivery method requested. The price of a single copy of the daily **Federal Register,** including postage, is based on the number of pages: $11 for an issue containing less than 200 pages; $22 for an issue containing 200 to 400 pages; and $33 for an issue containing more than 400 pages. Single issues of the microfiche edition may be purchased for $3 per copy, including postage. Remit check or money order, made payable to the Superintendent of Documents, or charge to your GPO Deposit Account, VISA, MasterCard, American Express, or Discover. Mail to: U.S. Government Printing Office—New Orders, P.O. Box 979050, St. Louis, MO 63197-9000; or call toll free 1-866-512-1800, DC area 202-512-1800; or go to the U.S. Government Online Bookstore site, see *bookstore.gpo.gov.*

There are no restrictions on the republication of material appearing in the **Federal Register.**

How To Cite This Publication: Use the volume number and the page number. Example: 75 FR 12345.

Postmaster: Send address changes to the Superintendent of Documents, Federal Register, U.S. Government Printing Office, Washington, DC 20402, along with the entire mailing label from the last issue received.

SUBSCRIPTIONS AND COPIES

PUBLIC

Subscriptions:

Paper or fiche	**202–512–1800**
Assistance with public subscriptions	**202–512–1806**
General online information	**202–512–1530; 1–888–293–6498**

Single copies/back copies:

Paper or fiche	**202–512–1800**
Assistance with public single copies	**1–866–512–1800 (Toll-Free)**

FEDERAL AGENCIES

Subscriptions:

Paper or fiche	**202–741–6005**
Assistance with Federal agency subscriptions	**202–741–6005**

FEDERAL REGISTER WORKSHOP

THE FEDERAL REGISTER: WHAT IT IS AND HOW TO USE IT

FOR: Any person who uses the Federal Register and Code of Federal Regulations.

WHO: Sponsored by the Office of the Federal Register.

WHAT: Free public briefings (approximately 3 hours) to present:

1. The regulatory process, with a focus on the Federal Register system and the public's role in the development of regulations.
2. The relationship between the Federal Register and Code of Federal Regulations.
3. The important elements of typical Federal Register documents.
4. An introduction to the finding aids of the FR/CFR system.

WHY: To provide the public with access to information necessary to research Federal agency regulations which directly affect them. There will be no discussion of specific agency regulations.

WHEN: Tuesday, November 9, 2010
9 a.m.–12:30 p.m.

WHERE: Office of the Federal Register
Conference Room, Suite 700
800 North Capitol Street, NW.
Washington, DC 20002

RESERVATIONS: (202) 741–6008

Printed on recycled paper.

Contents

Federal Register

Vol. 75, No. 201

Tuesday, October 19, 2010

Agriculture Department
See Forest Service

Alcohol, Tobacco, Firearms, and Explosives Bureau
NOTICES
Agency Information Collection Activities; Proposals, Submissions, and Approvals:
Application for Tax Exempt Transfer and Registration of Firearm, 64353–64354
Application for Tax-Exempt Transfer of Firearm and Registration to Special (Occupational) Taxpayer, 64355
Federal Firearms License (FFL) RENEWAL Application, 64355–64356
NFA Special Tax Renewal Registration and Return, etc., 64354
User-Limited Permit (Explosives), 64356

Bonneville Power Administration
NOTICES
Records Of Decisions:
Shepherds Flat Wind Project; Offer of Conditional Commitment for Loan Guarantee, and Electrical Interconnection; Revision, 64296–64301

Bureau of Ocean Energy Management, Regulation and Enforcement

NOTICES
Agency Information Collection Activities; Proposals, Submissions, and Approvals:
Increased Safety Measures for Energy Development on OCS NTL, 64348–64349

Centers for Disease Control and Prevention
NOTICES
Components for Evaluation of Direct-Reading Monitors for Gases and Vapors and Addendum, 64309–64310

Children and Families Administration
NOTICES
Meetings:
National Commission on Children and Disasters, 64311

Coast Guard
RULES
Bulk Solid Hazardous Materials:
Harmonization with the International Maritime Solid Bulk Cargoes Code, 64586–64609
Safety Zones:
Brandon Road Lock and Dam to Lake Michigan, etc., Chicago, IL, 64147–64148
NOTICES
Meetings:
Interagency Coordinating Committee on Oil Pollution Research, 64321–64322

Commerce Department
See Foreign-Trade Zones Board
See Industry and Security Bureau
See International Trade Administration
See National Institute of Standards and Technology
See National Oceanic and Atmospheric Administration
NOTICES
Agency Information Collection Activities; Proposals, Submissions, and Approvals:
Applications and Reporting Requirements for Incidental Take of Marine Mammals by Specified Activities, etc., 64245–64246
Highly Migratory Species Dealer Reporting Family of Forms, 64246
NTIA/FCC Web-Based Frequency Coordination System, 64245

Education Department
NOTICES
Agency Information Collection Activities; Proposals, Submissions, and Approvals, 64295–64296

Energy Department
See Bonneville Power Administration
See Federal Energy Regulatory Commission
PROPOSED RULES
Energy Conservation Programs:
Certification, Compliance, and Enforcement for Consumer Products and Commercial and Industrial Equipment, 64173
NOTICES
Records Of Decisions:
Shepherds Flat Wind Project; Offer of Conditional Commitment for Loan Guarantee, and Electrical Interconnection; Revision, 64296–64301

Environmental Protection Agency
RULES
Approvals of Implementation Plans:
Nitrogen Oxides Reasonably Available Control Technology; Wisconsin, 64155–64162
Determinations of Attainment (for PM10):
Eagle River PM10 Nonattainment Area, Alaska, 64162–64165
PROPOSED RULES
Approvals and Promulgations of Air Quality Implementation Plans:
Texas; Revisions to Rules and Regulations for Control of Air Pollution; Permitting of Grandfathered and Electing Electric Generating Facilities, 64235–64241
Determinations of Attainment (for PM10):
Eagle River PM10 Nonattainment Area, Alaska, 64241–64242
Source Specific Federal Implementation Plans:
Navajo Nation; Best Available Retrofit Technology for Four Corners Power Plant, 64221–64235
NOTICES
Regional Project Waivers of Section 1605 (Buy American) of 2009 American Recovery and Reinvestment Act:
City of Lowell, MA, 64308–64309

Executive Office of the President
See Presidential Documents
See Trade Representative, Office of United States

Federal Aviation Administration
RULES
Airworthiness Directives:
Cessna Aircraft Co. (Cessna) Models 336, 337, 337A (USAF 02B), 337B, M337B (USAF 02A), etc. Airplanes, 64111–64120
NOTICES
Approvals of Noise Compatibility Programs:
Chicago Executive Airport, Prospect Heights and Wheeling, IL, 64393–64394

Federal Deposit Insurance Corporation
PROPOSED RULES
Dodd–Frank Wall Street Reform and Consumer Protection Act:
Implementation of Certain Orderly Liquidation Authority Provisions, 64173–64182

Federal Emergency Management Agency
RULES
Final Flood Elevation Determinations, 64165–64171
NOTICES
Major Disasters and Related Determinations:
Arizona, 64320–64321

Federal Energy Regulatory Commission
NOTICES
Agency Information Collection Activities; Proposals, Submissions, and Approvals:
Extension, 64301–64303
Applications for Transfer of Licenses, Substitution of Relicense Applicant, and Soliciting Comments, etc.:
Vermont Marble Power, Division of Omya Inc; Central Vermont Public Service Corp., 64303
Environmental Assessments; Availability, etc.:
Northeast Upgrade Project, etc.; Public Scoping Meetings, 64303–64306
Institutions of Proceedings and Refund Effective Dates:
Shell Energy North America (US), LP, 64306
Meetings; Sunshine Act, 64306–64307
Revised Statements of Operating Conditions:
ECOP Gas Co., LLC, 64307–64308

Federal Highway Administration
NOTICES
Buy America Waivers, 64394
Solicitations For Participation:
Value Pricing Pilot Program (Fiscal Years 2010 and 2011), 64397–64403

Federal Motor Carrier Safety Administration
NOTICES
Qualification of Drivers; Exemption Applications:
Diabetes Mellitus, 64394–64396
Vision, 64396–64397

Food and Drug Administration
NOTICES
Determinations that Drugs were Not Withdrawn from Sale for Reasons of Safety or Effectiveness:
BUSPAR (Buspirone Hydrochloride) Tablets, 10 Milligrams, 15 Milligrams, and 30 Milligrams, 64310–64311
Meetings:
Endocrinologic and Metabolic Drugs Advisory Committee, 64313–64314
Oncologic Drugs Advisory Committee, 64314
Product Development Program for Interventions in Patients with Severe Bleeding Due to Trauma, etc.; Public Workshop, 64314–64315

Foreign-Trade Zones Board
NOTICES
Approvals for Manufacturing Authority:
Foreign-Trade Zone 196; ATC Logistics and Electronics, Fort Worth, TX, 64248
Approvals for Processing Authority:
Foreign-Trade Zones 73 and 74; Belts Corp. (Kitting of Liquor Gift Sets), Elkridge and Baltimore, MD, 64248–64249
Reorganizations/Expansions under Alternative Site Framework:
Foreign-Trade Zone 196, Fort Worth, TX, 64276

Forest Service
NOTICES
Environmental Impact Statements; Availability, etc.:
Tollgate Fuels Reduction Project; Umatilla National Forest, Walla Walla Ranger District, OR, 64243–64244
Meetings:
Wrangell–Petersburg Resource Advisory Committee, 64244–64245

Geological Survey
NOTICES
Agency Information Collection Activities; Proposals, Submissions, and Approvals:
Consolidated Consumers' Report, 64349–64350

Health and Human Services Department
See Centers for Disease Control and Prevention
See Children and Families Administration
See Food and Drug Administration
See Health Resources and Services Administration
See National Institutes of Health

Health Resources and Services Administration
NOTICES
Meetings:
Advisory Committee on Interdisciplinary, Community-Based Linkages, 64317
Advisory Committee on Training in Primary Care Medicine and Dentistry, 64318
National Advisory Council on Nurse Education and Practice, 64318

Homeland Security Department
See Coast Guard
See Federal Emergency Management Agency
See U.S. Customs and Border Protection

Housing and Urban Development Department
NOTICES
Formula Allocations and Program Requirements:
Neighborhood Stabilization Program Formula Grants, 64322–64348

Industry and Security Bureau
NOTICES
Meetings:
Information Systems Technical Advisory Committee; Partially Closed, 64258–64259

Interior Department
See Bureau of Ocean Energy Management, Regulation and Enforcement
See Geological Survey
See Land Management Bureau
See National Park Service

Internal Revenue Service
RULES
Hybrid Retirement Plans, 64123–64147
PROPOSED RULES
Additional Rules Regarding Hybrid Retirement Plans, 64197–64216
NOTICES
Privacy Act; Systems of Records, 64403–64409

International Trade Administration
NOTICES
Antidumping Duty Orders:
Certain Hot-Rolled Flat-Rolled Carbon-Quality Steel Products from Brazil; Correction, 64246–64247
Extensions of Final Results of Antidumping Duty Administrative and New-Shipper Reviews:
Freshwater Crawfish Tail Meat from People's Republic of China, 64249–64250
Extensions of Time Limits for Preliminary Results of First Administrative Reviews of Antidumping Duty Orders:
Small Diameter Graphite Electrodes from People's Republic of China, 64250
Final Antidumping Duty Administrative Reviews:
Certain Welded Carbon Steel Pipe and Tube from Turkey, 64250–64252
Final Results of 2008–2009 Antidumping Duty Administrative Reviews:
Certain Polyester Staple Fiber from Republic of Korea, 64252–64254
Final Results of Antidumping Duty Administrative Reviews:
Certain Hot-Rolled Flat-Rolled Carbon Quality Steel Products from Brazil, 64254–64257
Preliminary Results of Antidumping Duty Administrative Reviews:
Certain New Pneumatic Off-the-Road Tires from People's Republic of China, 64259–64268
Preliminary Results of Countervailing Duty Administrative Reviews:
New Pneumatic Off-the-Road Tires from People's Republic of China, 64268–64276

International Trade Commission
NOTICES
Meetings:
Global Supply Chains; Seventh Update Special Topic; Economic Effects of Significant U.S. Import Restraints, 64351–64352

Justice Department
See Alcohol, Tobacco, Firearms, and Explosives Bureau
NOTICES
Lodging of Consent Decrees:
United States and State of Louisiana v. ConocoPhillips Co. and Sasol North America Inc., 64352–64353
United States v. Rutgers Organics Corp., 64353

Labor Department
See Mine Safety and Health Administration
See Occupational Safety and Health Administration

Land Management Bureau
NOTICES
Environmental Impact Statements; Availability, etc.:
NextLight Renewable Power, LLC; Silver State Solar Project, 64350–64351

Mine Safety and Health Administration
PROPOSED RULES
Lowering Miners' Exposure to Respirable Coal Mine Dust Including Continuous Personal Dust Monitors, 64412–64506

National Aeronautics and Space Administration
NOTICES
Agency Information Collection Activities; Proposals, Submissions, and Approvals, 64356–64357

National Institute of Standards and Technology
NOTICES
Meetings:
Cloud Computing Forum and Workshop II, 64258

National Institutes of Health
NOTICES
Meetings:
Center for Scientific Review, 64316–64317
National Eye Institute, 64311
National Institute of Diabetes and Digestive and Kidney Diseases, 64317
National Institute of Neurological Disorders and Stroke, 64315–64316
NTP Board of Scientific Counselors, 64311–64313

National Oceanic and Atmospheric Administration
RULES
Fisheries of Caribbean, Gulf of Mexico, and South Atlantic:
Reef Fish Fishery of Gulf of Mexico; Closure of 2010 Gulf of Mexico Commercial Sector for Greater Amberjack, 64171–64172
Fisheries of the Exclusive Economic Zone Off Alaska:
Pollock in Statistical Area 610 of Gulf of Alaska, 64172
PROPOSED RULES
Taking and Importing Marine Mammals:
Military Training Activities Conducted Within the Gulf of Alaska Temporary Maritime Activities Area, 64508–64583
NOTICES
Applications:
Research on Marine Mammals, 64247–64248
Endangered and Threatened Wildlife and Plants:
Proposed Listing Determinations for Three Distinct Population Segments of Atlantic Sturgeon in Northeast Region, 64249
Takes of Marine Mammals Incidental to Specified Activities:
Navy Training Conducted at Silver Strand Training Complex, San Diego Bay, 64276–64295

National Park Service
RULES
General Regulation; National Park System, 64148–64155

National Science Foundation
NOTICES
Agency Information Collection Activities; Proposals, Submissions, and Approvals, 64357–64359

Nuclear Regulatory Commission
NOTICES
Applications and Amendments to Facility Operating Licenses Involving No Significant Hazards Considerations, 64359–64366
Meetings:
Advisory Committee on Reactor Safeguards, 64366–64367
Meetings; Sunshine Act, 64367

Occupational Safety and Health Administration
PROPOSED RULES
Interpretation of Provisions for Feasible Administrative or Engineering Controls of Occupational Noise, 64216–64221

Office of United States Trade Representative
See Trade Representative, Office of United States

Presidential Documents
PROCLAMATIONS
Special Observances:
Italian American Heritage and Culture Month (Proc. 8585), 64611–64614

Securities and Exchange Commission
RULES
Forms N–CSR and N–SAR in Connection with 2010 Comprehensive Iran Sanctions, Accountability, and Divestment Act:
Technical Amendments, 64120–64123
PROPOSED RULES
Issuer Review of Assets in Offerings of Asset-Backed Securities, 64182–64197
NOTICES
Self-Regulatory Organizations; Proposed Rule Changes:
BATS Exchange, Inc., 64387–64388
Chicago Board Options Exchange, Inc., 64371–64372
Municipal Securities Rulemaking Board, 64372–64375
NASDAQ Stock Market LLC, 64370–64371, 64375–64387
NYSE Amex LLC, 64368–64370

Small Business Administration
NOTICES
Major Disaster Declarations:
Illinois; Amendment (2), 64367–64368
Meetings:
North Florida District Advisory Council, 64368

Social Security Administration
NOTICES
Requests For Comments:
Proposed Recommendations to Social Security Administration for Occupational Information System (OIS) Development Planning, 64389–64390

State Department
NOTICES
Meetings:
Shipping Coordinating Committee, 64390

Surface Transportation Board
NOTICES
Abandonment Exemptions:
Norfolk Southern Railway Co., Polk County, IA, 64392–64393

Trade Representative, Office of United States
NOTICES
North American Free Trade Agreement:
Invitation for Applications for Inclusion on Chapter 19 Roster, 64390–64392

Transportation Department
See Federal Aviation Administration
See Federal Highway Administration
See Federal Motor Carrier Safety Administration
See Surface Transportation Board

Treasury Department
See Internal Revenue Service
RULES
Privacy Act; Implementation, 64147
NOTICES
Agency Information Collection Activities; Proposals, Submissions, and Approvals, 64403

U.S. Customs and Border Protection
NOTICES
Final Determinations:
Fairplay Legacy Electric Vehicles, 64318–64320

Separate Parts In This Issue

Part II
Labor Department, Mine Safety and Health Administration, 64412–64506

Part III
Commerce Department, National Oceanic and Atmospheric Administration, 64508–64583

Part IV
Homeland Security Department, Coast Guard, 64586–64609

Part V
Presidential Documents, 64611–64614

Reader Aids

Consult the Reader Aids section at the end of this page for phone numbers, online resources, finding aids, reminders, and notice of recently enacted public laws.

To subscribe to the Federal Register Table of Contents LISTSERV electronic mailing list, go to http://listserv.access.gpo.gov and select Online mailing list archives, FEDREGTOC-L, Join or leave the list (or change settings); then follow the instructions.

CFR PARTS AFFECTED IN THIS ISSUE

A cumulative list of the parts affected this month can be found in the Reader Aids section at the end of this issue.

3 CFR

Proclamations:

8585 64613

10 CFR

Proposed Rules:

429 64173
430 64173
431 64173

12 CFR

Proposed Rules:

380 64173

14 CFR

39 64111

17 CFR

249 64120
274 64120

Proposed Rules:

229 64182
230 64182
240 64182
249 64182

26 CFR

1 64123

Proposed Rules:

1 64197

29 CFR

Proposed Rules:

1910 64216
1926 64216

30 CFR

Proposed Rules:

70 64412
71 64412
72 64412
75 64412
90 64412

31 CFR

1 64147

33 CFR

165 64147

36 CFR

2 64148

40 CFR

52 64155
81 64162

Proposed Rules:

49 64221
52 64235
81 64241

44 CFR

67 64165

46 CFR

97 64586
148 64586

50 CFR

622 64171
679 64172

Proposed Rules:

218 64508

Rules and Regulations

Federal Register

Vol. 75, No. 201

Tuesday, October 19, 2010

This section of the FEDERAL REGISTER contains regulatory documents having general applicability and legal effect, most of which are keyed to and codified in the Code of Federal Regulations, which is published under 50 titles pursuant to 44 U.S.C. 1510.

The Code of Federal Regulations is sold by the Superintendent of Documents. Prices of new books are listed in the first FEDERAL REGISTER issue of each week.

DEPARTMENT OF TRANSPORTATION

Federal Aviation Administration

14 CFR Part 39

[Docket No. FAA–2010–1013; Directorate Identifier 2010–CE–048–AD; Amendment 39–16478; AD 2010–21–18]

RIN 2120–AA64

Airworthiness Directives; Cessna Aircraft Company (Cessna) Models 336, 337, 337A (USAF 02B), 337B, M337B (USAF 02A), T337B, 337C, T337C, 337D, T337D, 337E, T337E, 337F, T337F, 337G, T337G, 337H, P337H, T337H, T337H–SP, F337E, FT337E, F337F, FT337F, F337G, FT337GP, F337H, and FT337HP Airplanes

AGENCY: Federal Aviation Administration (FAA), DOT.

ACTION: Final rule; request for comments.

SUMMARY: We are adopting a new airworthiness directive (AD) for the products listed above. This AD requires inspecting the wings for internal and external damage, repairing any damage found, installing an operational limitation placard in the cockpit, adding limitations to the flight manual supplement, and reporting the results of the inspection to the FAA if damage is found. This AD was prompted by a wing overload failure and by reports of cracks in the upper wing skins on certain Cessna airplanes that are or have ever been modified by Aviation Enterprises Supplemental Type Certificate (STC) SA02055AT, SA02056AT, SA02307AT, or SA02308AT. We are issuing this AD to detect and correct damage in the wings and to prevent overload failure of the wing due to the installation of the STCs. Damage in the wing or overload failure of the wing could result in structural failure of the wing, which could result in loss of control.

DATES: This AD is effective November 3, 2010.

We must receive comments on this AD by December 3, 2010.

ADDRESSES: You may send comments by any of the following methods:

- *Federal eRulemaking Portal:* Go to *http://www.regulations.gov.* Follow the instructions for submitting comments.
- *Fax:* 202–493–2251.
- *Mail:* U.S. Department of Transportation, Docket Operations, M–30, West Building Ground Floor, Room W12–140, 1200 New Jersey Avenue, SE., Washington, DC 20590.
- *Hand Delivery:* U.S. Department of Transportation, Docket Operations, M–30, West Building Ground Floor, Room W12–140, 1200 New Jersey Avenue, SE., Washington, DC 20590, between 9 a.m. and 5 p.m., Monday through Friday, except Federal holidays.

Examining the AD Docket

You may examine the AD docket on the Internet at *http://www.regulations.gov;* or in person at the Docket Management Facility between 9 a.m. and 5 p.m., Monday through Friday, except Federal holidays. The AD docket contains this AD, the regulatory evaluation, any comments received, and other information. The street address for the Docket Office (*phone:* 800–647–5527) is in the **ADDRESSES** section. Comments will be available in the AD docket shortly after receipt.

FOR FURTHER INFORMATION CONTACT: William O. Herderich, Aerospace Engineer, FAA, Atlanta Aircraft Certification Office, 1701 Columbia Avenue, College Park, Georgia 30337; *phone:* (404) 474–5547; *fax:* (404) 474–5605; *e-mail: William.O.Herderich@faa.gov.*

SUPPLEMENTARY INFORMATION:

Discussion

In September 2000, we were notified of structural wing damage to a Cessna Model T337G airplane equipped with Aviation Enterprises wing extensions STC SA02055AT. The damage was described as starting with loose and working (smoking) rivets in the upper surface of the wing, progressing to buckling of the skins just outboard of the fuel tank access covers, loose wing extensions, and finally cracking in the wing skins. Based on discussions with the STC holder at that time, we believed that the damage to the airplane was the result of operation from unimproved airstrips and was an isolated event. In response to this event, Aviation Enterprises issued Wing Extension Service Letter AE 01–11–00. This letter recommended installing a placard on the instrument panel advising the pilot of weight and airspeed limitations and notes that landing on unpaved runways is not recommended. No further action was taken at this time.

About ten years later, in February 2010, we received a report of an accident involving a Cessna Model 337 airplane modified with Aviation Enterprises wing extensions STC SA02055AT (along with Aviation Enterprises STC SA01094AT winglets). Investigation of the incident revealed cracks in the upper wing skins just outboard of the fuel tank access covers near wing station (WSTA) 150. The cracks were on both wings of the airplane and covered by repair patches. The wing skin cracks matched the description of those found in the September 2000 incident.

In response to these problems and without determining that there was an unsafe condition under 14 CFR part 39, we issued Special Airworthiness Information Bulletin (SAIB) CE–10–20. This SAIB recommended that Cessna Model 336 and 337 series airplanes equipped with wingtip extensions have a one-time inspection for internal and external damage from WSTA 23 to the wing tip within the next 100 hours time-in-service. The SAIB listed focused inspection areas based on the previously reported damage. The SAIB also contained a request for the inspection results to be sent to the FAA if damage was found.

As a result of the inspection report request in the SAIB, one report was received. In this report, it was stated that the damage to the airplane included loose and working (smoking) rivets in the upper surface of the wing, buckling of the upper surface skins and stringers just outboard of the fuel tanks access covers, and cracking in the wing skins. There was also an upper surface skin buckle near WSTA 60 near the boom. The cracks on this airplane match those found from both previously referenced incidents. In all reported cases, the skin cracks occurred in the wing skin under and just outboard of the wing tank access cover. However, the location of the cracks on this aircraft was at WSTA

177, further outboard than the previously noted airplanes, because this airplane had additional extended range fuel tanks.

Further inspection revealed additional damage on the airplane that appeared to be a result of the installation of the wing extension modification. There was damage to the left and right WSTA 222 ribs, which had been torn, from the aft lightening hole to the lower surface and was bent down to allow installation of the wing extension fuel line. The fuel line appeared to be chafing on the torn metal. Also, extra holes drilled through the spar cap were found at several span-wise locations that were consistent with the stall fence attachments. These holes had been tapped (threaded) and were left open with no fastener installed. One of the holes was located so close to the edge of the spar cap, it was breaking out of the edge and was also located immediately adjacent to a fastener for the fuel tank access cover. Also found was the lack of nuts used for the wing extension attaching screws. It appeared that the holes in the substructure (skins, ribs, and spars) were tapped (threaded) to accept screws, rather than use nuts. Several access holes were also found cut into the lower surface of the skin that had no reinforcement.

The FAA reviewed information from the accident investigation, a number of service difficulty reports (SDRs), and data submitted by Aviation Enterprises for demonstrating compliance to the airworthiness standards. Based on the investigation, the FAA determined that Aviation Enterprises may not have adequately substantiated the wing structure for the increased limit and ultimate loads resulting from the wing extension. We also determined that weight, airspeed, ballast, and "g" limit restrictions need to be placed on these airplanes to allow them to operate within the minimum margins of safety.

These conditions, if not corrected, could result in structural failure of the wing, which could result in loss of control.

FAA's Determination

We are issuing this AD because we evaluated all the relevant information and determined the unsafe condition described previously is likely to exist or develop in other products of the same type design.

AD Requirements

This AD requires inspecting the wings for internal and external damage, repairing any damage found, installing an operational limitation placard in the cockpit, and adding limitations to the flight manual supplement. The AD also requires reporting the results of the inspection to the FAA if damage is found.

FAA's Justification and Determination of the Effective Date

An unsafe condition exists that requires the immediate adoption of this AD. The FAA has found that the risk to the flying public justifies waiving notice and comment prior to adoption of this rule because cracks in the wings and potential for wing overload could result in structural failure of the wing, which could result in loss of control.

Therefore, we find that notice and opportunity for prior public comment are impracticable and that good cause exists for making this amendment effective in less than 30 days.

Comments Invited

This AD is a final rule that involves requirements affecting flight safety and was not preceded by notice and an opportunity for public comment. However, we invite you to send any written data, views, or arguments about this AD. Send your comments to an address listed under the **ADDRESSES** section. Include the docket number FAA–2010–1013 and Directorate Identifier 2010–CE–048–AD at the beginning of your comments. We specifically invite comments on the overall regulatory, economic, environmental, and energy aspects of this AD. We will consider all comments received by the closing date and may amend this AD because of those comments.

We will post all comments we receive, without change, to *http://www.regulations.gov,* including any personal information you provide. We will also post a report summarizing each substantive verbal contact we receive about this AD.

Costs of Compliance

We estimate that this AD affects 12 airplanes of U.S. registry.

We estimate the following costs to comply with this AD:

ESTIMATED COSTS

Action	Labor cost	Parts cost	Cost per product	Cost on U.S. operators
Inspection of the wing for damage	20 work-hours × $85 per hour = $1,700 per inspection cycle.	Not applicable	$1,700 per inspection cycle.	$20,400 per inspection cycle.
Installing a placard in the cockpit	4 work-hours × $85 per hour = $340	Not applicable	$340	$4,080.
Modifying the Limitations section of the Aviation Enterprises Aircraft Flight Manual Supplement.	4 work-hours × $85 per hour = $340	Not applicable	$340	$4,080.

We estimate the following costs to do any necessary repairs that will be required based on the results of the inspection. The cost for repair may vary from as little as replacing a bolt to as much as replacing a wing. We have no way of determining the number of aircraft that will need these repairs and the extent of the repair necessary. Below are estimates of some possible necessary repairs:

ON-CONDITION COSTS

Action	Labor cost	Parts cost
Install reinforcements around wing access holes cutouts, 2 per hole, 6 holes per airplane.	12 work-hours × $85 per hour = $1,020	$50.
Replace upper outboard wing skins, 13 per side, 2 sides per airplane.	26 work-hours × $85 per hour = $2,210	$100 per side × 2 sides = $200.
Replace upper surface outboard stringers, 6 stringers per airplane.	2 work-hours per stringer, 6 stringers per airplane = 12 work-hours × $85 per hour = $1,020.	$100.

ON-CONDITION COSTS—Continued

Action	Labor cost	Parts cost
Replace screws with aviation standard fasteners with nuts/collars in cleaned up holes, 20 screws per side, 2 sides per airplane.	40 work-hours × $85 per hour = $3,400	$50.
Spar repair (possible splice replacement and repairing 4 holes).	20 work-hours per repair per location × $85 per hour = $1,700.	$100 per location.
Repair torn WSTA 222 Rib	5 work-hours per side, 2 sides per airplane = 10 work-hours × $85 per hour = $850.	$50.

Authority for This Rulemaking

Title 49 of the United States Code specifies the FAA's authority to issue rules on aviation safety. Subtitle I, section 106, describes the authority of the FAA Administrator. "Subtitle VII: Aviation Programs" describes in more detail the scope of the Agency's authority.

We are issuing this rulemaking under the authority described in Subtitle VII, Part A, Subpart III, Section 44701: "General requirements." Under that section, Congress charges the FAA with promoting safe flight of civil aircraft in air commerce by prescribing regulations for practices, methods, and procedures the Administrator finds necessary for safety in air commerce. This regulation is within the scope of that authority because it addresses an unsafe condition that is likely to exist or develop on products identified in this rulemaking action.

Regulatory Findings

This AD will not have federalism implications under Executive Order 13132. This AD will not have a substantial direct effect on the States, on the relationship between the national government and the States, or on the distribution of power and responsibilities among the various levels of government.

For the reasons discussed above, I certify that this AD:

(1) Is not a "significant regulatory action" under Executive Order 12866,

(2) Is not a "significant rule" under DOT Regulatory Policies and Procedures (44 FR 11034, February 26, 1979),

(3) Will not affect intrastate aviation in Alaska, and

(4) Will not have a significant economic impact, positive or negative, on a substantial number of small entities under the criteria of the Regulatory Flexibility Act.

List of Subjects in 14 CFR Part 39

Air transportation, Aircraft, Aviation safety, Safety.

Adoption of the Amendment

■ Accordingly, under the authority delegated to me by the Administrator, the FAA amends 14 CFR part 39 as follows:

PART 39—AIRWORTHINESS DIRECTIVES

■ 1. The authority citation for part 39 continues to read as follows:

Authority: 49 U.S.C. 106(g), 40113, 44701.

§ 39.13 [Amended]

■ 2. The FAA amends § 39.13 by adding the following new airworthiness directive (AD):

2010–21–18 Cessna Aircraft Company: Amendment 39–16478; Docket No. FAA–2010–1013; Directorate Identifier 2010–CE–048–AD.

Effective Date

(a) This AD is effective November 3, 2010.

Affected ADs

(b) None.

Applicability

(c) This AD applies to Cessna Aircraft Company (Cessna) Models 336, 337, 337A (USAF 02B), 337B, M337B (USAF 02A), T337B, 337C, T337C, 337D, T337D, 337E, T337E, 337F, T337F, 337G, T337G, 337H, P337H, T337H, T337H–SP, F 337E, FT337E, F 337F, FT337F, F 337G, FT337GP, F337H, and FT337HP airplanes, all serial numbers, that:

(1) Are certificated in any category; and

(2) Are or have ever been modified by Aviation Enterprises Supplemental Type Certificate (STC) SA02055AT, SA02056AT, SA02307AT, or SA02308AT.

Subject

(d) Joint Aircraft System Component (JASC)/Air Transport Association (ATA) of America Code 57; Wings.

Unsafe Condition

(e) This AD was prompted by a wing overload failure and by reports of cracks in the upper wing skins on certain Cessna airplanes that are now or have ever been modified by Aviation Enterprises STC SA02055AT, SA02056AT, SA02307AT, or SA02308AT. We are issuing this AD to detect and correct damage in the wings and to prevent overload failure of the wing due to the installation of the STCs. Damage in the wing or overload failure of the wing could result in structural failure of the wing, which could result in loss of control.

Compliance

(f) Comply with this AD within the compliance times specified, unless already done.

Required Actions

(g) Before further flight after November 3, 2010 (the effective date of this AD), do a general and focused inspection of the wing for internal and external damage from wing station (WSTA) 23 to the wing tip. Repetitively thereafter inspect every 100 hours time-in-service (TIS) or every 12 calendar months, whichever occurs first, for as long as any of the STCs specified in paragraph (c) of this AD are installed. If at any time the STCs are permanently removed, one final inspection is required following removal. Do the inspections following Appendix 1 of this AD.

(h) Anytime severe and/or extreme turbulence is encountered during flight, before the next flight, do a focused inspection of the wing for damage following steps 1, 2, 3, 4, 7, and 10 in Appendix 1 of this AD. Also inspect for signs of distress in the upper front spar in the area around WSTA 177. The definition of severe and extreme turbulence can be found in Table 7–1–9 of the FAA Aeronautical Information Manual (AIM). You may obtain a copy of the FAA AIM at *http://www.faa.gov/air_traffic/publications/atpubs/aim/*.

(i) For airplanes specified in paragraph (c) of this AD that are modified by STC SA02055AT or SA02308AT (wing extensions with fuel provisions), before further flight after November 3, 2010 (the effective date of this AD), do the following:

(1) Incorporate the information from Appendix 2 of this AD into the Limitations section of the Aviation Enterprises Aircraft Manual Supplement.

(2) Fabricate a placard (using at least ⅛-inch letters) with the following words and install the placard on the instrument panel within the pilot's clear view: "MTOW=4,700 LBS. MAINTAIN AT LEAST 12 GAL OF FUEL IN EACH WING TIP FOR AIRPLANE WEIGHTS ABOVE 3,300 LBS."

(j) For airplanes specified in paragraph (c) of this AD that are modified by STC SA02056AT or SA02307AT (wing extensions with no fuel provisions), before further flight after November 3, 2010 (the effective date of this AD), do the following:

(1) Incorporate the information from Appendix 3 of this AD into the Limitations

section of the Aviation Enterprises Aircraft Manual Supplement.

(2) Fabricate a placard (using at least ⅛-inch letters) with the following words and install the placard on the instrument panel within the pilot's clear view: "MTOW=4,000 LBS, MAX MANEUVER=2.5 G, Va=100 KCAS, Vno=105 KCAS, Vne=135 KCAS. OPERATION RESTRICTED TO VFR"

(k) Before further flight after each inspection required in paragraphs (g) and (h) of this AD where damage or signs of distress are found, repair all damaged and distressed parts following FAA Advisory Circular (AC) 43.13–1B. You may obtain a copy of AC 43.13–1B at *http://rgl.faa.gov/.*

(l) Within 10 days after each inspection required in paragraphs (g) and (h) of this AD in which damage or distress is found, send a report to the FAA at the address specified in paragraph (o) of this AD. Include as much information as possible, including the "N" number, model number, serial number, list of STC modifications, TIS on the aircraft and wing extension, description of the damage (location, length, orientation, parts cracked, sketches, etc.), and if possible, pictures of the damage.

(m) For all airplanes specified in paragraph (c) of this AD that have STC SA02055AT, SA02056AT, SA02307AT, or SA02308AT permanently removed, do one final inspection as specified in paragraph (g) of this AD, take corrective actions as specified in paragraph (k) of this AD, report the results as specified in paragraph (l) of this AD, and remove the flight limitations specified in paragraphs (i) and (j) of the AD. No further action is required.

Alternative Methods of Compliance (AMOCs)

(n)(1) The Manager, FAA, Atlanta Aircraft Certification Office (ACO) has the authority to approve AMOCs for this AD, if requested using the procedures found in 14 CFR 39.19. In accordance with 14 CFR 39.19, send your request to your principal inspector or local Flight Standards District Office, as appropriate. If sending information directly to the manager of the ACO, send it to the attention of the person identified in the Related Information section of this AD.

(2) Before using any approved AMOC, notify your Principal Maintenance Inspector or Principal Avionics Inspector, as appropriate, or lacking a principal inspector, notify your local Flight Standards District Office.

Related Information

(o) For more information about this AD, contact William O. Herderich, Aerospace Engineer, FAA, Atlanta Aircraft Certification Office (ACO), 1701 Columbia Avenue, College Park, Georgia 30337; *phone:* (404) 474–5547; *fax:* (404) 474–5605; *e-mail: William.O.Herderich@faa.gov.*

Appendix 1 to AD 2010–21–18—General and Focused Inspection Procedures

Perform a general and focused inspection of the wing for internal and external damage from wing station (WSTA) 23 to the wing tip. The general inspection must be performed in accordance with 14 CFR 43.15(c), using a checklist that includes at least the scope and detail of the items contained in Appendix D of 14 CFR part 43. The focused inspection must include the items listed below. Remove all wing access panels to conduct the inspections. Do theses inspections following the manufacturer's service information (Cessna Maintenance/Service Manuals) and any other appropriate guidance, such as FAA Advisory Circular (AC) 43.13–1B Acceptable Methods, Techniques, and Practices—Aircraft Inspection and Repair. AC 43.13–1B can be found at *http://rgl.faa.gov/.*

Focused inspection items to look for:

(1) Wrinkles in upper wing skins, from the outboard edge on the fuel tank access covers (WSTA 150 or 177) to the WSTA 222 (*See* View B, Figure 3).

(2) Wrinkles in the upper wing skins from WSTA 55 to 66, adjacent to the booms (*See* View E, Figure 6).

(3) Cracking of the upper wing skins. Pay particular attention to any wrinkles, the radius between stiffeners at WSTA 150 (under fuel tank covers), and unreinforced access holes (*See* View B, Figure 3).

(4) Working (smoking) rivets outboard of the wing tank access covers.

(5) Fasteners with less than two diameters edge distance.

(6) Fasteners with less than four diameters center to center spacing.

(7) Looseness of attachments of the tip extension to the wing and wing tip to wing extension when pushing up and down on the tip.

(8) Any signs of distress along both front and rear spars, particularly in the area around WSTA 177.

(9) Inspect under any repairs to the upper skins, particularly in the area just outboard of the fuel tank access covers as these may be covering up existing damage.

(10) Inter-rivet buckling of the stringers attached to the upper surface skin, outboard of the fuel tank access covers (*See* View F, Figure 7).

(11) Inspect rib at WSTA 222 for damage. Trimming of the rib may have been done to allow installation of fuel lines (*See* View A, Figure 2). Repair in accordance with AC 43.13–1B, Chapter 4, paragraph 4–58(g) and Figure 4–14, or by using another FAA-approved method that restores equivalent strength of the wing rib.

Appendix 1 to AD 2010–21–18—General and Focused Inspection Procedures (Continued)

(1) Inspect and identify screws, installed in tapped (threaded) holes in metal substructure, used to attach wing tips, stall fences, fuel and electrical components, and access doors. For tapped holes, remove fastener and open up the diameter to provide a smooth bore hole, for the smallest oversize fastener, using close tolerance holes noted in AC 43.13–1B, paragraph 7–39 or other FAA-approved scheme. Maintain minimum 2 x fastener diameter edge distance and 4 x fastener diameter center to center spacing. Select and install new, equivalent strength or stronger, fasteners with nuts/collars in accordance with AC 43.13–1B, Chapter 7 and AC 43.13–2B, paragraph 108 or other FAA-approved repair. New fasteners must not have threads in bearing against the sides of the holes.

(2) Inspect wing skins for unreinforced cutouts. (*See* View C, Figure 4).

(3) Inspect the upper spar cap horizontal flanges for open holes (*See* View D, Figure 5).

BILLING CODE 4910–13–P

Appendix 1 to AD 2010-21-18 (Continued)

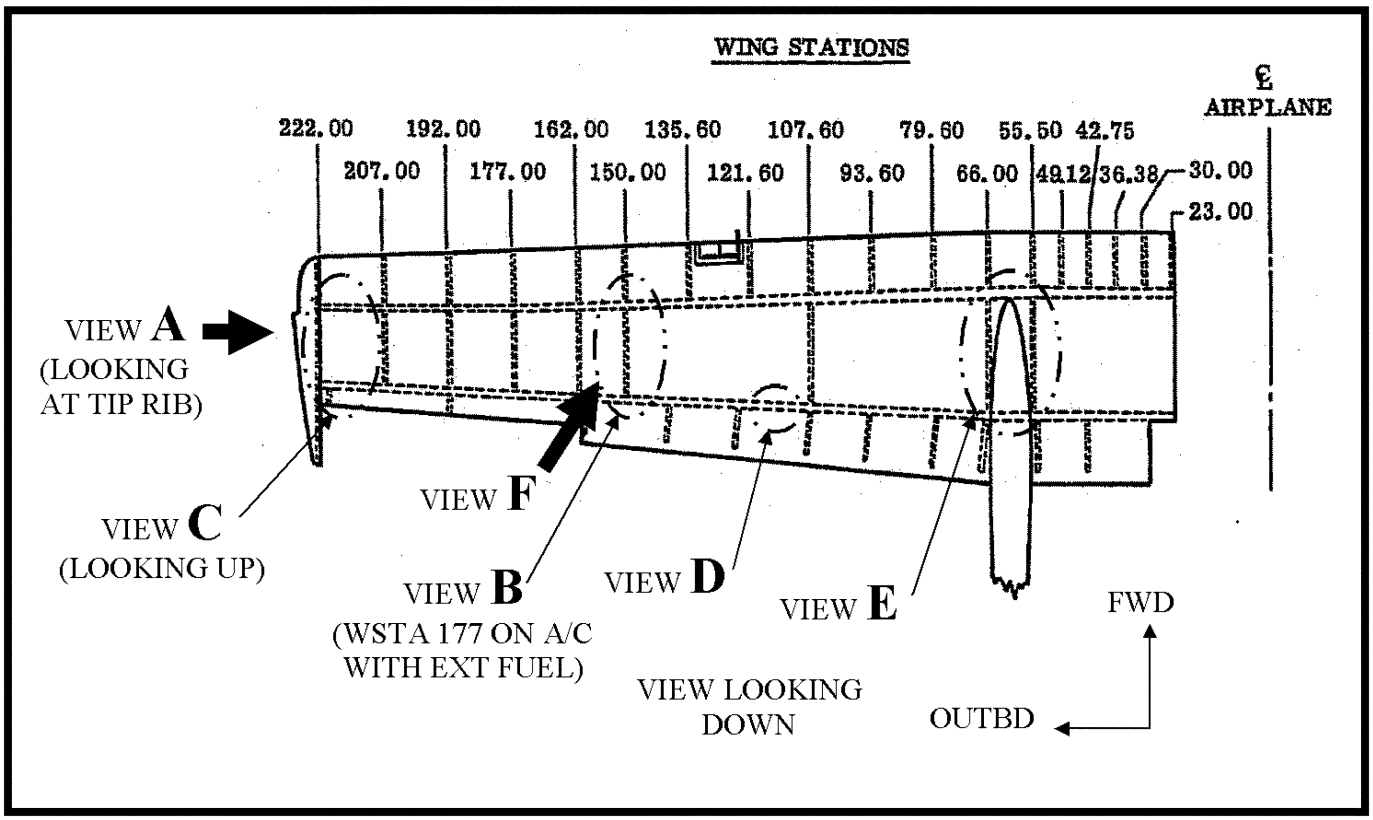

Figure 1

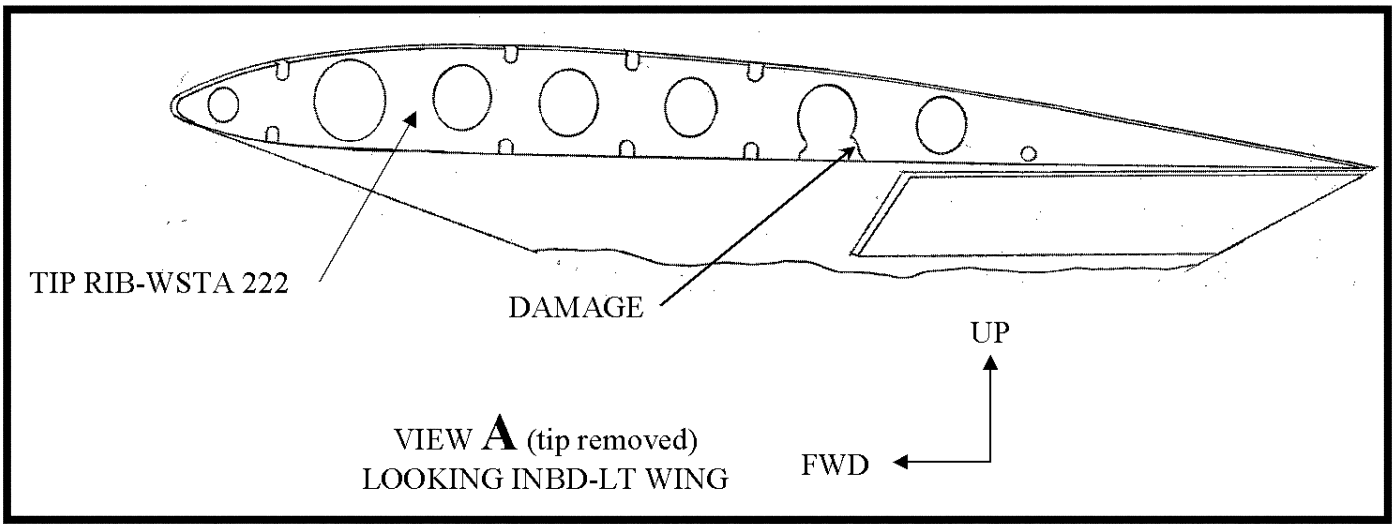

Figure 2

Appendix 1 to AD 2010-21-18 (Continued)

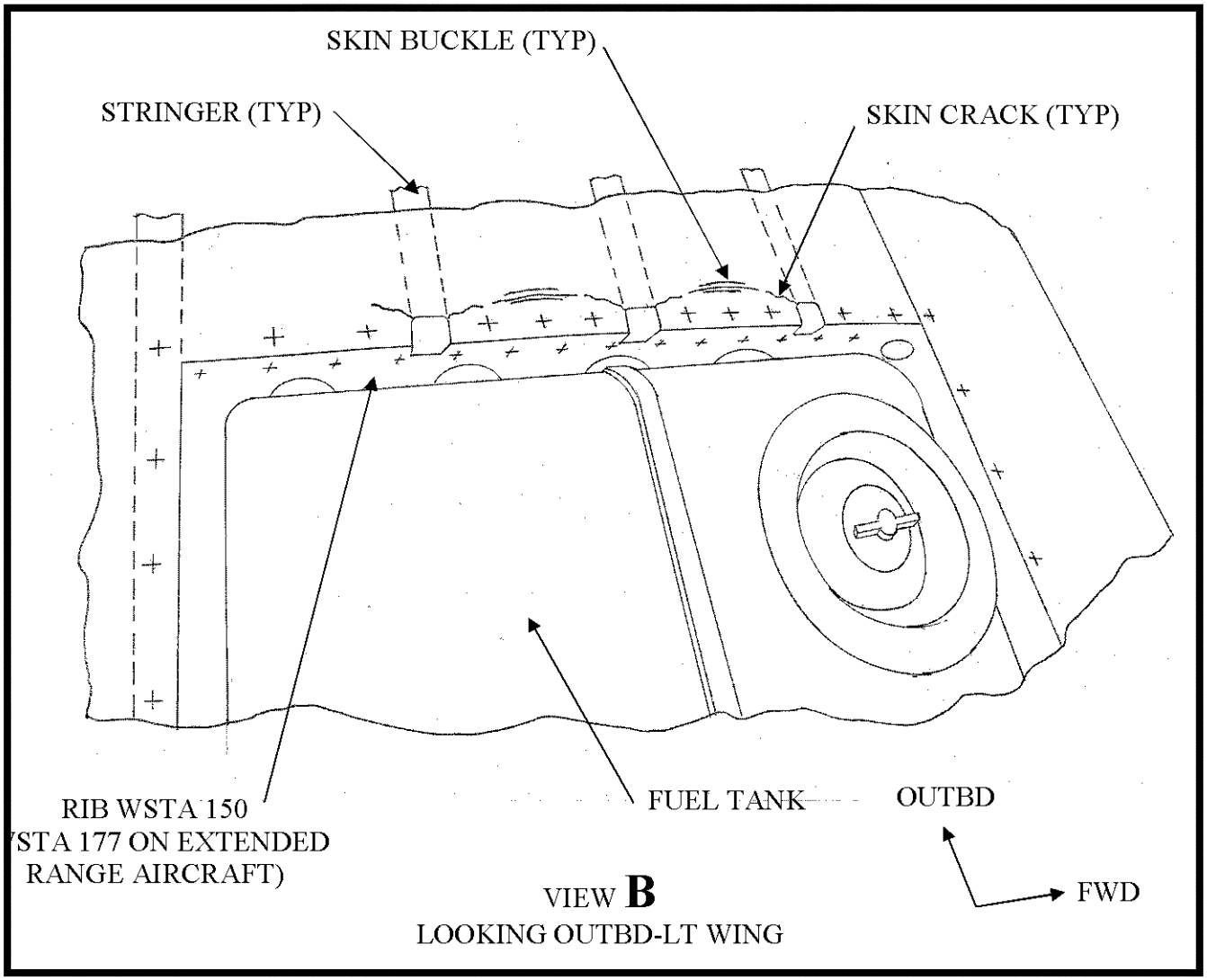

Figure 3

Appendix 1 to AD 2010-21-18 (Continued)

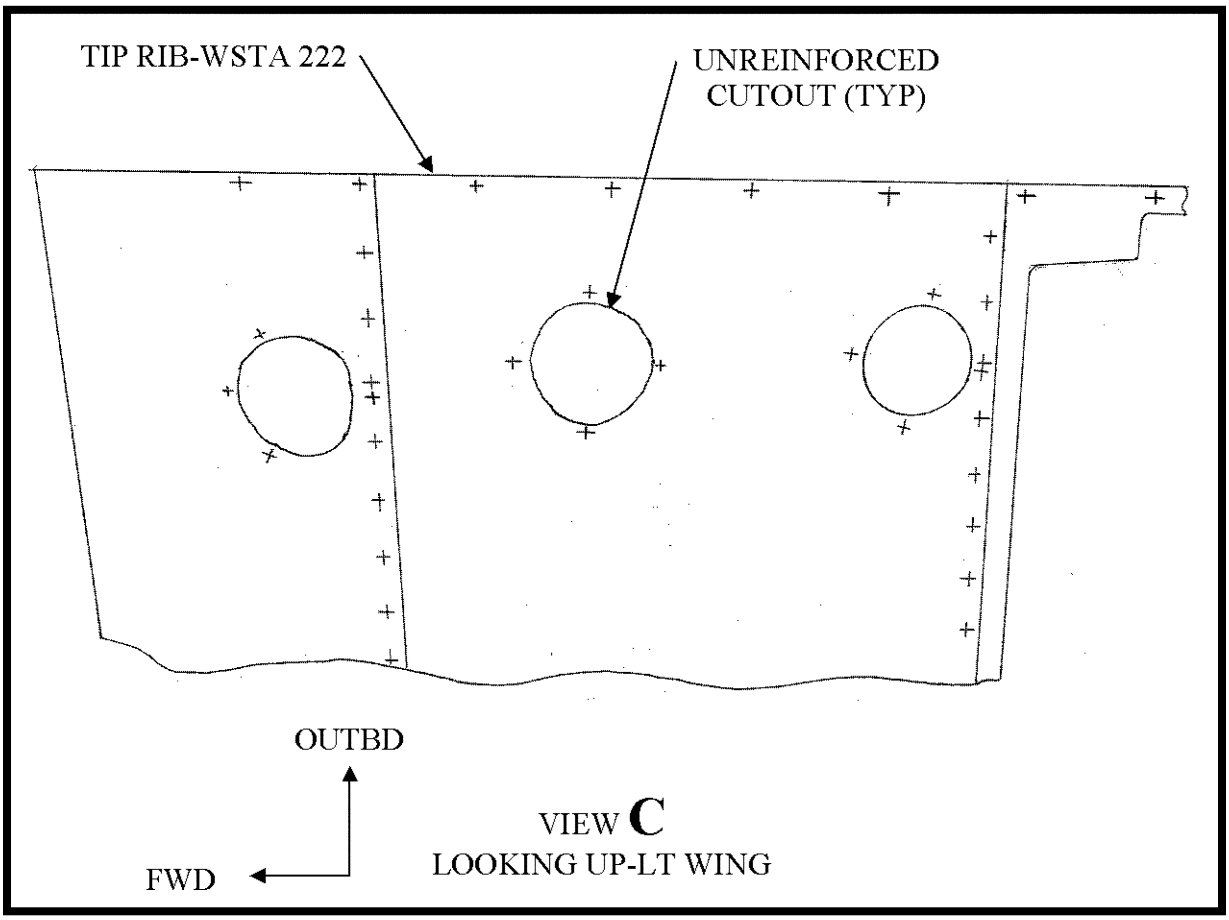

Figure 4

Appendix 1 to AD 2010-21-18 (Continued)

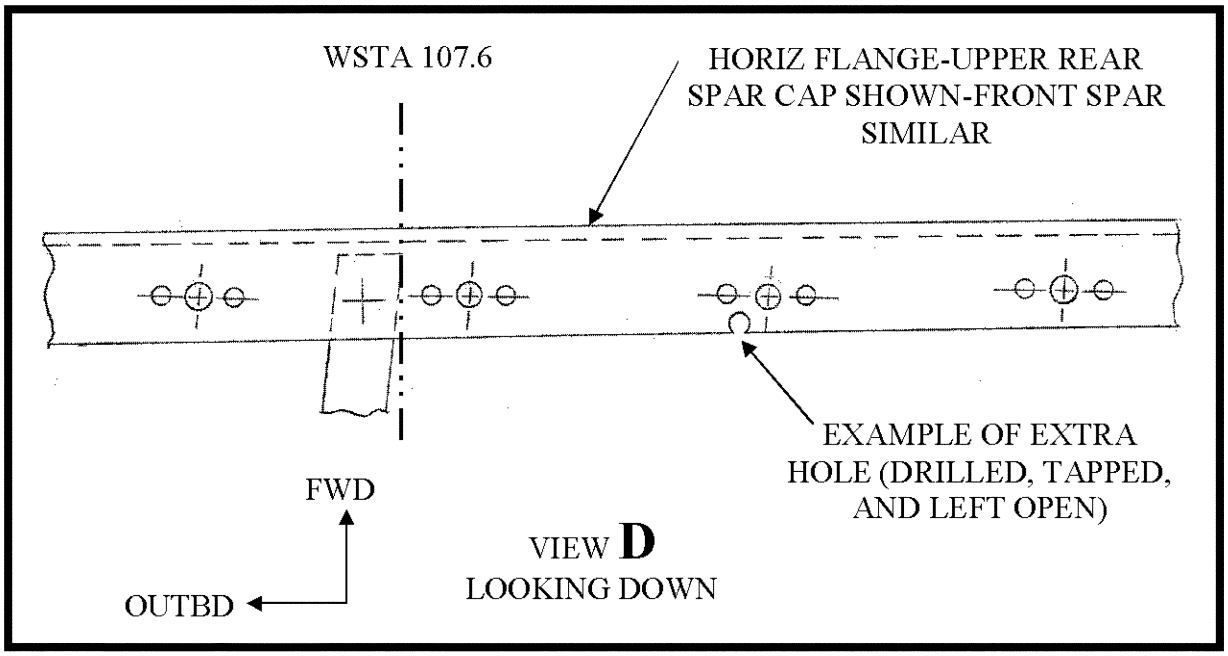

Figure 5

Appendix 1 to AD 2010-21-18 (Continued)

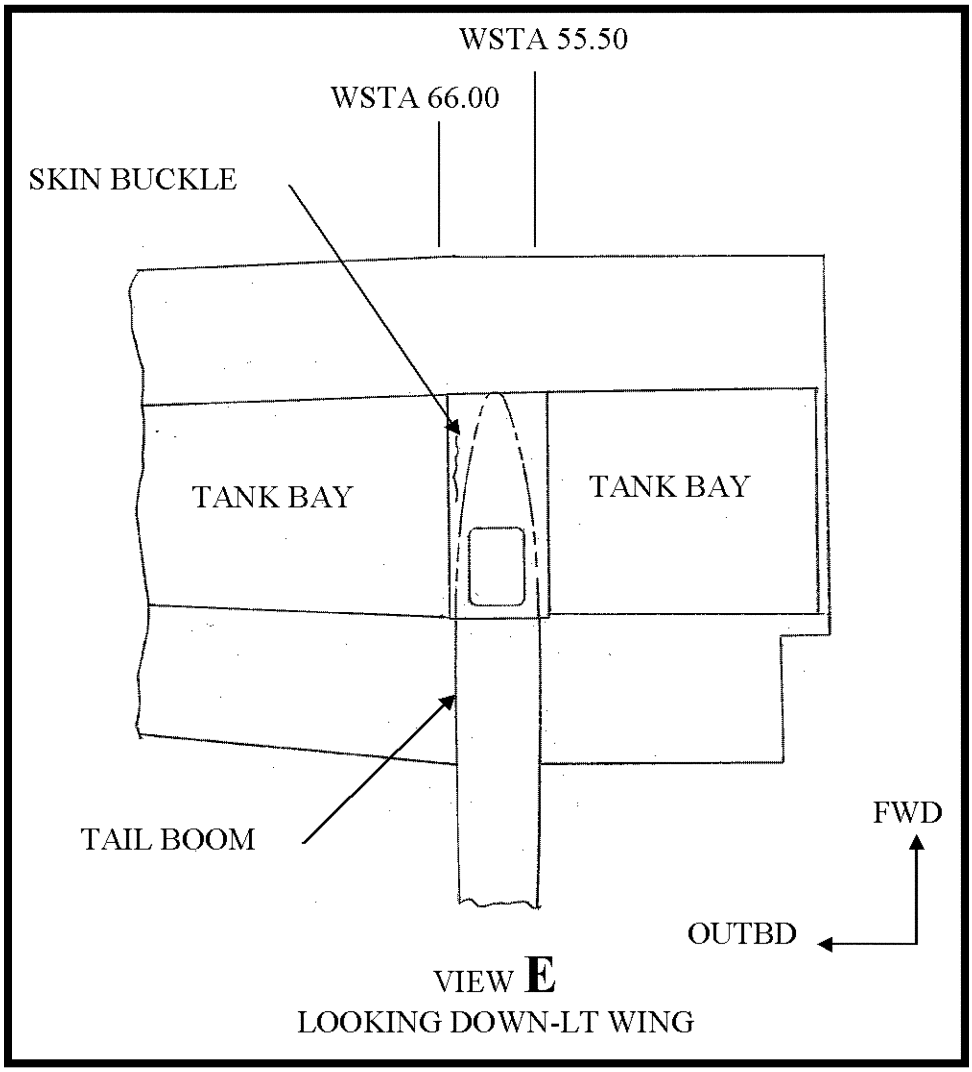

Figure 6

Appendix 1 to AD 2010-21-18 (Continued)

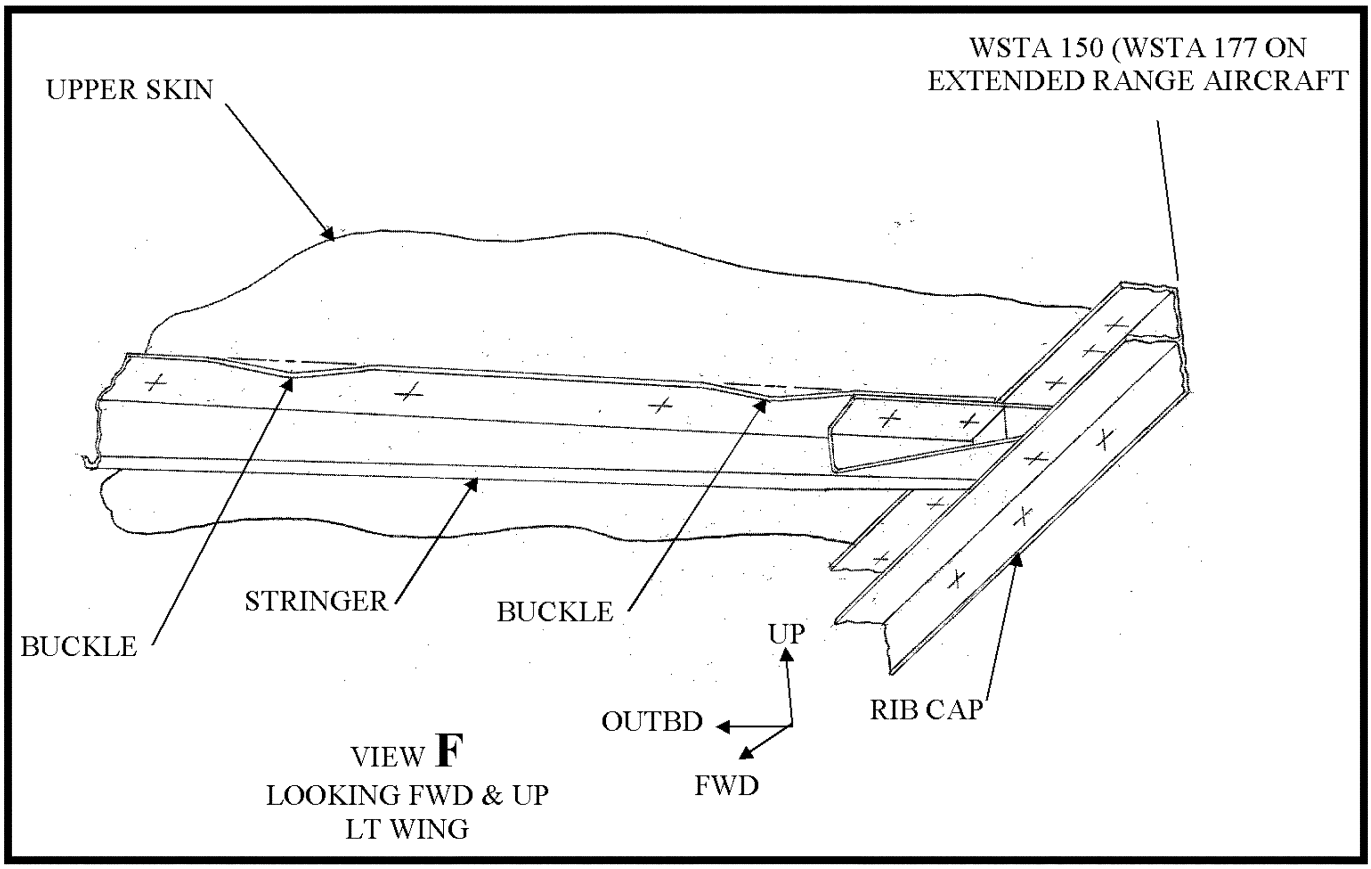

Figure 7

BILLING CODE 4910–13–C

Appendix 2 to AD 2010–21–18—Airworthiness Limitations for the Aviation Enterprises Aircraft Manual Supplement

(1) Limit the airplane MTOW to 4,700 LBS.

(2) For airplane weights above 3,300 LBS, at least 12 gallons of fuel must be maintained in each wing tip.

Appendix 3 to AD 2010–21–18—Airworthiness Limitations for the Aviation Enterprises Aircraft Manual Supplement

(1) Limit the MTOW to 4,000 LBS.
(2) Limit the max maneuver to 2.5 G.
(3) Limit Va to 100 KCAS.
(4) Vno to 105 KCAS.
(5) Limit Vne to 135 KCAS.
(6) Limit operation to VFR only.

Issued in Kansas City, Missouri, on October 4, 2010.

Christina L. Marsh,

Acting Manager, Small Airplane Directorate, Aircraft Certification Service.

[FR Doc. 2010–25434 Filed 10–18–10; 8:45 am]

BILLING CODE 4910–13–P

SECURITIES AND EXCHANGE COMMISSION

17 CFR Parts 249 and 274

[Release Nos. 34–63087; IC–29461]

Technical Amendments to Forms N–CSR and N–SAR in Connection With the Comprehensive Iran Sanctions, Accountability, and Divestment Act of 2010

AGENCY: Securities and Exchange Commission.

ACTION: Final rule; technical amendments.

SUMMARY: The Securities and Exchange Commission is adopting technical amendments to Forms N–CSR and N–SAR under the Securities Exchange Act of 1934 and the Investment Company Act of 1940 in connection with amendments to Section 13(c) of the Investment Company Act that were included in the Comprehensive Iran Sanctions, Accountability, and Divestment Act of 2010.

DATES: *Effective Date:* October 19, 2010.

FOR FURTHER INFORMATION CONTACT: Kieran G. Brown, Senior Counsel, Office of Disclosure Regulation, Division of Investment Management, at (202) 551–6784, Securities and Exchange Commission, 100 F Street, NE., Washington, DC 20549–5720.

SUPPLEMENTARY INFORMATION: The Securities and Exchange Commission ("Commission") is adopting technical amendments to Form N–CSR [1] and Form N–SAR [2] under the Securities Exchange Act of 1934 ("Exchange Act") [3] and the Investment Company Act of 1940 ("Investment Company Act").[4]

I. Discussion

On July 1, 2010, the President signed the Comprehensive Iran Sanctions, Accountability, and Divestment Act of 2010 ("Iran Divestment Act") into law.[5] Among other things, the Iran

[1] 17 CFR 249.331 and 274.128.
[2] 17 CFR 249.330 and 274.101.
[3] 15 U.S.C. 78a *et seq.*
[4] 15 U.S.C. 80a–1 *et seq.*
[5] Pub. L. 111–195, 124 Stat. 1312 (2010).

Divestment Act amended Section 13(c) of the Investment Company Act[6] to provide that no person may bring any civil, criminal, or administrative action against any registered investment company, or any employee, officer, director, or investment adviser of the investment company, based solely upon the investment company divesting from, or avoiding investing in, securities issued by persons that the investment company determines, using credible information that is available to the public, engage in certain investment activities in Iran.[7] Section 13(c)(2)(B) of the Investment Company Act provides that this limitation on actions does not apply to a registered investment company, or any of its employees, officers, directors, or investment advisers, unless the investment company makes disclosures about the divestments in accordance with regulations prescribed by the Commission.[8] To that end, the Iran Divestment Act requires that we issue, not later than 120 days after enactment, any revisions we determine to be necessary to the regulations requiring disclosure by each registered investment company that divests itself of securities in accordance with Section 13(c) of the Investment Company Act to include divestments of securities in accordance with the amendments added by the Iran Divestment Act.[9]

Under our current regulations, each registered investment company that divests itself of securities in accordance with Section 13(c) of the Investment Company Act is required to disclose the divestment on the next Form N–CSR or Form N–SAR that it files following the divestment. Management investment companies are required to provide the disclosure on Form N–CSR, pursuant to Item 6(b) of the form, and unit investment trusts are required to provide the disclosure on Form N–SAR, pursuant to Item 133 of the form.[10]

These form items were originally adopted to implement the Sudan Accountability and Divestment Act of 2007 ("Sudan Divestment Act"), which limits civil, criminal, and administrative actions that may be brought against a registered investment company that divests from securities of issuers that conduct or have direct investments in certain business operations in Sudan, provided that the investment company makes disclosures in accordance with regulations prescribed by the Commission.[11] As a result, each item contains a termination provision that is based on the termination of the relevant provisions of the Sudan Divestment Act. Moreover, the instructions to the items contain references to the Sudan Divestment Act. Specifically, Instruction 1 to Item 6(b) of Form N–CSR and the Instruction to Item 133 of Form N–SAR each include a statement that Section 13(c) of the Investment Company Act was added by the Sudan Divestment Act. In addition, the heading to the Instruction to Item 133 of Form N–SAR includes a reference to the Sudan Divestment Act.

The requirements of Item 6(b) of Form N–CSR and Item 133 of Form N–SAR apply to divestment of securities in accordance with Section 13(c) of the Investment Company Act. Therefore, we have determined that the items are broad enough to apply to disclosure of divestment of securities in accordance with the amendments to Section 13(c) added by the Iran Divestment Act without substantive revision. However, we have determined that it is appropriate to make technical revisions that remove the references to the Sudan Divestment Act from the forms and require disclosure of a Section 13(c) divestment to specify whether it is undertaken pursuant to the Sudan Divestment Act or the Iran Divestment Act.

Specifically, in accordance with the Iran Divestment Act, we are amending our forms to delete the references to the Sudan Divestment Act from Instruction 1 to Item 6(b) of Form N–CSR, the Instruction to Item 133 of Form N–SAR, and the heading to the Instruction to Item 133 of Form N–SAR. We are also amending the termination provisions in Item 6(b) of Form N–CSR and Item 133 of Form N–SAR to eliminate the references to termination of the Sudan Divestment Act and to provide, more generically, that the disclosure requirements terminate one year after the first date on which all statutory provisions that underlie Section 13(c) of the Investment Company Act (*i.e.,* the provisions of both the Sudan Divestment Act and the Iran Divestment Act) have terminated. Finally, we are amending Item 6(b) of Form N–CSR and Item 133 of Form N–SAR to require that any registrant that divests itself of securities in accordance with Section 13(c) of the Investment Company Act must disclose the name of the statute that added the provision of Section 13(c) in accordance with which the securities were divested (*i.e.,* the "Sudan Accountability and Divestment Act" or the "Comprehensive Iran Sanctions, Accountability, and Divestment Act").[12] We are adding this requirement so that it will be clear from the disclosure which provision of Section 13(c) is being relied upon in connection with the divestment.

II. Procedural and Other Matters

Under the Administrative Procedure Act ("APA"), notice and public comment procedures are not required when an agency, for good cause, finds "that notice and public procedure thereon are impracticable, unnecessary, or contrary to the public interest."[13] As discussed in this document, because no substantive revisions to our forms requiring Section 13(c) divestment disclosure are necessary to conform them to Section 203(b) of the Iran Divestment Act, the Commission believes that good cause exists to dispense with a public notice and comment period for these amendments. We have determined that only technical revisions to our forms are appropriate to make the existing forms consistent with the Iran Divestment Act. The technical amendments to Forms N–CSR and N–SAR remove references to the Sudan Divestment Act from Item 6(b) of Form N–CSR and Item 133 of Form N–SAR. The technical amendments also require that any registrant that divests itself of securities in accordance with Section 13(c) of the Investment Company Act must disclose the name of the statute under which the securities were divested. Because these revisions merely revise Item 6(b) of Form N–CSR

[6] 15 U.S.C. 80a–13(c).

[7] Section 203(a) of the Iran Divestment Act [to be codified at 15 U.S.C. 80a–13(c)(1)(B)].

[8] 15 U.S.C. 80a–13(c)(2)(B).

[9] Section 203(b) of the Iran Divestment Act.

[10] Item 6(b) of Form N–CSR; Item 133 of Form N–SAR. The regulations require disclosure of information that will identify the securities divested and the magnitude of the divestment, including the issuer's name; exchange ticker symbol; Committee on Uniform Securities Identification Procedures ("CUSIP") number; total number of shares or, for debt securities, principal amount divested; and dates that the securities were divested. Item 6(b)(1)–(5) of Form N–CSR; Items 133.A–E of Form N–SAR. In addition, if the registered investment company continues to hold any securities of the divested issuer, it is required to disclose the exchange ticker symbol; CUSIP number; and total number of shares or, for debt securities, principal amount of such securities, held on the date of filing. Item 6(b)(6) of Form N–CSR; Item 133.F of Form N–SAR. While a registered investment company is not required to include disclosure under the relevant Item, the limitation on actions provided in Section 13(c) does not apply with respect to a divestment that is not disclosed. Instruction 1 to Item 6(b) of Form N–CSR; Instruction to Item 133 of Form N–SAR.

[11] Sudan Accountability and Divestment Act of 2007, Pub. L. 110–174, 121 Stat. 2516 (2007); Investment Company Act Release No. 28254 (Apr. 24, 2008) [73 FR 23328, 23328 (Apr. 30, 2008)] (adoption of Item 6(b) of Form N–CSR and Item 133 of Form N–SAR).

[12] Item 6(b)(7) of Form N–CSR; Item 133.G. of Form N–SAR.

[13] 5 U.S.C. 553(b)(B).

and Item 133 of Form N–SAR to make them consistent with a newly enacted statute, Section 203 of the Iran Divestment Act, the Commission finds that the amendments are technical in nature and that publishing the amendments for comment is unnecessary.[14]

Publication of a substantive rule not less than 30 days before its effective date is required by the APA except as otherwise provided by the agency for good cause.[15] For the same reasons described above with respect to notice and opportunity for comment, the Commission finds that there is good cause for making the technical amendments to each of the forms effective on the date of publication in the **Federal Register**.

The form amendments contain "collection of information" requirements within the meaning of the Paperwork Reduction Act of 1995 ("PRA").[16] The titles for the collections of information are "Form N–CSR under the Investment Company Act of 1940 and Securities Exchange Act of 1934, Certified Shareholder Report," and "Form N–SAR under the Investment Company Act of 1940, Semi-Annual Report for Registered Investment Companies." Form N–CSR (OMB Control No. 3235–0570) under the Exchange Act and the Investment Company Act is used by registered management investment companies filing certified shareholder reports. Form N–SAR (OMB Control No. 3235–0330) under the Exchange Act and the Investment Company Act is used by registered investment companies to file periodic reports with the Commission. An agency may not conduct or sponsor, and a person is not required to respond to, a collection of information unless it displays a currently valid OMB control number.

We do not believe that the technical amendments necessitate an increase in the current PRA burden estimates for Form N–CSR and Form N–SAR. When the forms were originally amended to implement the Sudan Divestment Act, we estimated that approximately 15% of all registered investment companies had an objective of investing internationally.[17] We also conservatively assumed that every investment company portfolio that had an international investment strategy would disclose a divestment in accordance with the Sudan Divestment Act on each semi-annual filing, for a total of approximately 1,000 such filings per year.[18] Since then, however, it appears that there have been less than ten total filings by investment companies disclosing a divestment in accordance with the Sudan Divestment Act.[19] Based on this experience, we do not believe that it is appropriate to adjust our existing estimate upwards to reflect additional filings for divestments in accordance with the Iran Divestment Act.

We also do not believe that the technical amendments necessitate a decrease in the current PRA burden estimates for Form N–CSR and Form N–SAR. Because we do not know the extent to which divestments in accordance with the Iran Divestment Act will occur, we believe that it is appropriate to maintain a conservative assumption that each Form N–CSR and N–SAR filing by an international portfolio will have a disclosure either with respect to the Sudan Divestment Act or the Iran Divestment Act. In addition, any decrease in the estimates would be insignificant relative to the total current PRA burden estimates for Form N–CSR and Form N–SAR because the estimated current PRA burden for the Section 13(c) disclosure is itself insignificant relative to the total burden estimates for these forms, *i.e.,* 510 hours (out of a total burden of 138,662.5 hours, or 0.37%)[20] for Form N–CSR and 10 hours (out of a total burden of 107,213 hours, or 0.01%)[21] for Form N–SAR.

Section 23(a)(2) of the Exchange Act[22] requires us, when adopting rules under the Exchange Act, to consider the impact that any new rule would have on competition. Section 23(a)(2) also prohibits us from adopting any rule that would impose a burden on competition not necessary or appropriate in furtherance of the purposes of the Exchange Act. In addition, Section 3(f) of the Exchange Act[23] requires the Commission, when engaging in rulemaking that requires it to consider or determine whether an action is necessary or appropriate in the public interest, to consider, in addition to the protection of investors, whether the action will promote efficiency, competition, and capital formation. Section 2(c) of the Investment Company Act[24] requires the Commission, when engaging in rulemaking that requires it to consider or determine whether an action is consistent with the public interest, to consider, in addition to the protection of investors, whether the action will promote efficiency, competition, and capital formation. Because the amendments are technical in nature, we do not anticipate that any competitive advantages or disadvantages would be created. We do not expect that the amendments, as technical amendments, will have an effect on efficiency, competition, or capital formation. Moreover, the Commission is taking this action to make Forms N–CSR and N–SAR consistent with the Iran Divestment Act. Thus, any costs and benefits and other economic effects resulting from these amendments are mandated under the Act.

III. Statutory Authority

The Commission is adopting amendments to Form N–SAR and Form N–CSR pursuant to authority set forth in Section 203(b) of the Comprehensive Iran Sanctions, Accountability, and Divestment Act of 2010 and Sections 10(b), 13, 15(d), 23(a), and 36 of the Exchange Act [15 U.S.C. 78j(b), 78m, 78o(d), 78w(a), and 78mm], and Sections 8, 13(c), 24(a), 30, and 38 of the Investment Company Act [15 U.S.C. 80a–8, 80a–13(c), 80a–24(a), 80a–29, and 80a–37].

List of Subjects

17 CFR Part 249

Reporting and recordkeeping requirements, Securities.

17 CFR Part 274

Investment companies, Reporting and recordkeeping requirements, Securities.

Text of Form Amendments

■ For the reasons set out in the preamble, the Commission amends Title 17, Chapter II, of the Code of Federal Regulations as follows.

[14] This finding also satisfies the requirements of 5 U.S.C. 808(2) (if a federal agency finds that notice and public comment are "impractical, unnecessary or contrary to the public interest," a rule "shall take effect at such time as the federal agency promulgating the rule determines"), allowing the amendments to become effective notwithstanding the requirement of 5 U.S.C. 801.

The amendments do not require analysis under the Regulatory Flexibility Act. *See* 5 U.S.C. 601(2) (for purposes of Regulatory Flexibility Act analysis, the term "rule" means any rule for which the agency publishes a general notice of proposed rulemaking).

[15] 5 U.S.C. 553(d).

[16] 44 U.S.C. 3501 *et seq.*

[17] Investment Company Act Release No. 28254, *supra* note 11, at 23330.

[18] *See id.* (6,743 annual and semi-annual filings on Form N–CSR × 15% of filings on Form N–CSR) + (90 filings on Form N–SAR × 15% of filings on Form N–SAR) = 1,025 filings.

[19] Based on the Commission staff's review of filings made with the Commission.

[20] Investment Company Act Release No. 28254, *supra* note 11, at 23330.

[21] *Id.*

[22] 15 U.S.C. 78w(a)(2).

[23] 15 U.S.C. 78c(f).

[24] 15 U.S.C. 80a–2(c).

PART 249—FORMS, SECURITIES EXCHANGE ACT OF 1934

■ 1. The authority citation for part 249 continues to read in part as follows:

Authority: 15 U.S.C. 78a *et seq.* and 7201 *et seq.;* and 18 U.S.C. 1350, unless otherwise noted.

* * * * *

PART 274—FORMS PRESCRIBED UNDER THE INVESTMENT COMPANY ACT OF 1940

■ 2. The authority citation for part 274 continues to read in part as follows:

Authority: 15 U.S.C. 77f, 77g, 77h, 77j, 77s, 78c(b), 78*l,* 78m, 78n, 78o(d), 80a–8, 80a–24, 80a–26, and 80a–29, unless otherwise noted.

* * * * *

■ 3. Form N–SAR (referenced in §§ 249.330 and 274.101) is amended by:
■ a. In paragraph E. of Item 133, deleting the word "and";
■ b. In paragraph F. of Item 133, revising "filing." to read "filing; and";
■ c. Adding new paragraph G. to Item 133;
■ d. Revising the sentence immediately following new paragraph G. to Item 133;
■ e. In the heading to the Instruction to Item 133, deleting the phrase "in Accordance with the Sudan Accountability and Divestment Act of 2007"; and
■ f. In the first sentence of the Instruction to Item 133, deleting the phrase ", which was added by the Sudan Accountability and Divestment Act of 2007". The addition and revision read as follows:

Note: The text of Form N–SAR does not, and these amendments will not, appear in the Code of Federal Regulations.

Form N–SAR

* * * * *

133. * * *

G. Name of the statute that added the provision of Section 13(c) in accordance with which the securities were divested.

This item 133 shall terminate one year after the first date on which all statutory provisions that underlie Section 13(c) of the Investment Company Act of 1940 have terminated.

* * * * *

■ 4. Form N–CSR (referenced in §§ 249.331 and 274.128) is amended by:
■ a. In paragraph (b)(5) of Item 6, deleting the word "and";
■ b. In paragraph (b)(6) of Item 6, revising "filing." to read "filing; and";
■ c. Adding new paragraph (7) to Item 6(b);
■ d. Revising the sentence immediately following new paragraph (7) to Item 6(b); and
■ e. In Instruction 1 to paragraph (b) of Item 6, deleting the phrase ", which was added by the Sudan Accountability and Divestment Act of 2007".

The addition and revision read as follows:

Note: The text of Form N–CSR does not, and these amendments will not, appear in the Code of Federal Regulations.

Form N–CSR

* * * * *

Item 6. Investments.

(a) * * *
(b) * * *
(7) Name of the statute that added the provision of Section 13(c) in accordance with which the securities were divested.

This Item 6(b) shall terminate one year after the first date on which all statutory provisions that underlie Section 13(c) of the Investment Company Act of 1940 have terminated.

* * * * *

By the Commission.

October 13, 2010.

Elizabeth M. Murphy,

Secretary.

[FR Doc. 2010–26206 Filed 10–18–10; 8:45 am]

BILLING CODE 8011–01–P

DEPARTMENT OF THE TREASURY

Internal Revenue Service

26 CFR Part 1

[TD 9505]

RIN 1545–BG36

Hybrid Retirement Plans

AGENCY: Internal Revenue Service (IRS), Treasury.

ACTION: Final Regulations.

SUMMARY: This document contains final regulations providing guidance relating to certain provisions of the Internal Revenue Code (Code) that apply to hybrid defined benefit pension plans. These regulations provide guidance on changes made by the Pension Protection Act of 2006, as amended by the Worker, Retiree, and Employer Recovery Act of 2008. These regulations affect sponsors, administrators, participants, and beneficiaries of hybrid defined benefit pension plans.

DATES: *Effective Date:* These regulations are effective on October 19, 2010.

Applicability Date: These regulations generally apply to plan years that begin on or after January 1, 2011. However, see the "Effective/Applicability Dates" section in this preamble for additional information regarding the applicability of these regulations.

FOR FURTHER INFORMATION CONTACT: Neil S. Sandhu, Lauson C. Green, or Linda S. F. Marshall at (202) 622–6090 (not a toll-free number).

SUPPLEMENTARY INFORMATION:

Background

This document contains amendments to the Income Tax Regulations (26 CFR part 1) under sections 411(a)(13) and 411(b)(5) of the Code. Generally, a defined benefit pension plan must satisfy the minimum vesting standards of section 411(a) and the accrual requirements of section 411(b) in order to be qualified under section 401(a) of the Code. Sections 411(a)(13) and 411(b)(5), which modify the minimum vesting standards of section 411(a) and the accrual requirements of section 411(b), were added to the Code by section 701(b) of the Pension Protection Act of 2006, Public Law 109–280 (120 Stat. 780 (2006)) (PPA '06). Sections 411(a)(13) and 411(b)(5), as well as certain effective date provisions related to these sections, were subsequently amended by the Worker, Retiree, and Employer Recovery Act of 2008, Public Law 110–458 (122 Stat. 5092 (2008)) (WRERA '08).

Section 411(a)(13)(A) provides that an applicable defined benefit plan (which is defined in section 411(a)(13)(C)) is not treated as failing to meet either (i) the requirements of section 411(a)(2) (subject to a special vesting rule in section 411(a)(13)(B) with respect to benefits derived from employer contributions) or (ii) the requirements of section 411(a)(11), 411(c), or 417(e), with respect to accrued benefits derived from employer contributions, merely because the present value of the accrued benefit (or any portion thereof) of any participant is, under the terms of the plan, equal to the amount expressed as the balance of a hypothetical account or as an accumulated percentage of the participant's final average compensation. Section 411(a)(13)(B) requires an applicable defined benefit plan to provide that an employee who has completed at least 3 years of service has a nonforfeitable right to 100 percent of the employee's accrued benefit derived from employer contributions.

Under section 411(a)(13)(C)(i), an applicable defined benefit plan is defined as a defined benefit plan under which the accrued benefit (or any portion thereof) of a participant is calculated as the balance of a hypothetical account maintained for the participant or as an accumulated percentage of the participant's final

average compensation. Under section 411(a)(13)(C)(ii), the Secretary of the Treasury is to issue regulations which include in the definition of an applicable defined benefit plan any defined benefit plan (or portion of such a plan) which has an effect similar to a plan described in section 411(a)(13)(C)(i).

Section 411(b)(1)(H)(i) provides that a defined benefit plan fails to comply with section 411(b) if, under the plan, an employee's benefit accrual is ceased, or the rate of an employee's benefit accrual is reduced, because of the attainment of any age. Section 411(b)(5), which was added to the Code by section 701(b)(1) of PPA '06, provides additional rules related to section 411(b)(1)(H)(i). Section 411(b)(5)(A) generally provides that a plan is not treated as failing to meet the requirements of section 411(b)(1)(H)(i) if a participant's accrued benefit, as determined as of any date under the terms of the plan, would be equal to or greater than that of any similarly situated, younger individual who is or could be a participant. For this purpose, section 411(b)(5)(A)(iv) provides that the accrued benefit may, under the terms of the plan, be expressed as an annuity payable at normal retirement age, the balance of a hypothetical account, or the current value of the accumulated percentage of the employee's final average compensation. Section 411(b)(5)(G) provides that, for purposes of section 411(b)(5), any reference to the accrued benefit of a participant refers to the participant's benefit accrued to date.

Section 411(b)(5)(B) imposes certain requirements on an applicable defined benefit plan in order for the plan to satisfy section 411(b)(1)(H). Section 411(b)(5)(B)(i) provides that such a plan is treated as failing to meet the requirements of section 411(b)(1)(H) if the terms of the plan provide for an interest credit (or an equivalent amount) for any plan year at a rate that is greater than a market rate of return. Under section 411(b)(5)(B)(i)(I), a plan is not treated as having an above-market rate merely because the plan provides for a reasonable minimum guaranteed rate of return or for a rate of return that is equal to the greater of a fixed or variable rate of return. Section 411(b)(5)(B)(i)(II) provides that an applicable defined benefit plan is treated as failing to meet the requirements of section 411(b)(1)(H) unless the plan provides that an interest credit (or an equivalent amount) of less than zero can in no event result in the account balance or similar amount being less than the aggregate amount of contributions credited to the account. Section 411(b)(5)(B)(i)(III) authorizes the Secretary of the Treasury to provide by regulation for rules governing the calculation of a market rate of return for purposes of section 411(b)(5)(B)(i)(I) and for permissible methods of crediting interest to the account (including fixed or variable interest rates) resulting in effective rates of return meeting the requirements of section 411(b)(5)(B)(i)(I).

Section 411(b)(5)(B)(ii), (iii), and (iv) contains additional requirements that apply if, after June 29, 2005, an applicable plan amendment is adopted. Section 411(b)(5)(B)(v)(I) defines an applicable plan amendment as an amendment to a defined benefit plan which has the effect of converting the plan to an applicable defined benefit plan. Under section 411(b)(5)(B)(ii), if, after June 29, 2005, an applicable plan amendment is adopted, the plan is treated as failing to meet the requirements of section 411(b)(1)(H) unless the requirements of section 411(b)(5)(B)(iii) are met with respect to each individual who was a participant in the plan immediately before the adoption of the amendment. Section 411(b)(5)(B)(iii) specifies that, subject to section 411(b)(5)(B)(iv), the requirements of section 411(b)(5)(B)(iii) are met with respect to any participant if the accrued benefit of the participant under the terms of the plan as in effect after the amendment is not less than the sum of: (I) The participant's accrued benefit for years of service before the effective date of the amendment, determined under the terms of the plan as in effect before the amendment; plus (II) the participant's accrued benefit for years of service after the effective date of the amendment, determined under the terms of the plan as in effect after the amendment. Section 411(b)(5)(B)(iv) provides that, for purposes of section 411(b)(5)(B)(iii)(I), the plan must credit the participant's account or similar amount with the amount of any early retirement benefit or retirement-type subsidy for the plan year in which the participant retires if, as of such time, the participant has met the age, years of service, and other requirements under the plan for entitlement to such benefit or subsidy.

Section 411(b)(5)(B)(v) sets forth certain provisions related to an applicable plan amendment. Section 411(b)(5)(B)(v)(II) provides that if the benefits under two or more defined benefit plans of an employer are coordinated in such a manner as to have the effect of adoption of an applicable plan amendment, the plan sponsor is treated as having adopted an applicable plan amendment as of the date the coordination begins. Section 411(b)(5)(B)(v)(III) directs the Secretary of the Treasury to issue regulations to prevent the avoidance of the purposes of section 411(b)(5)(B) through the use of two or more plan amendments rather than a single amendment.

Section 411(b)(5)(B)(vi) provides special rules for determining benefits upon termination of an applicable defined benefit plan. Under section 411(b)(5)(B)(vi)(I), an applicable defined benefit plan is not treated as satisfying the requirements of section 411(b)(5)(B)(i) (regarding permissible interest crediting rates) unless the plan provides that, upon plan termination, if the interest crediting rate under the plan is a variable rate, the rate of interest used to determine accrued benefits under the plan is equal to the average of the rates of interest used under the plan during the 5-year period ending on the termination date. In addition, under section 411(b)(5)(B)(vi)(II), the plan must provide that, upon plan termination, the interest rate and mortality table used to determine the amount of any benefit under the plan payable in the form of an annuity payable at normal retirement age is the rate and table specified under the plan for this purpose as of the termination date, except that if the interest rate is a variable rate, the rate used is the average of the rates used under the plan during the 5-year period ending on the termination date.

Section 411(b)(5)(C) provides that a plan is not treated as failing to meet the requirements of section 411(b)(1)(H)(i) solely because the plan provides offsets against benefits under the plan to the extent the offsets are otherwise allowable in applying the requirements of section 401(a). Section 411(b)(5)(D) provides that a plan is not treated as failing to meet the requirements of section 411(b)(1)(H) solely because the plan provides a disparity in contributions or benefits with respect to which the requirements of section 401(l) (relating to permitted disparity for Social Security benefits and related matters) are met.

Section 411(b)(5)(E) provides that a plan is not treated as failing to meet the requirements of section 411(b)(1)(H) solely because the plan provides for indexing of accrued benefits under the plan. Under section 411(b)(5)(E)(iii), indexing means the periodic adjustment of the accrued benefit by means of the application of a recognized investment index or methodology. Section 411(b)(5)(E)(ii) requires that, except in the case of a variable annuity, the indexing not result in a smaller benefit

than the accrued benefit determined without regard to the indexing.

Section 701(a) of PPA '06 added provisions to the Employee Retirement Income Security Act of 1974, Public Law 93–406 (88 Stat. 829 (1974)) (ERISA), that are parallel to sections 411(a)(13) and 411(b)(5) of the Code. The guidance provided in these regulations with respect to the Code also applies for purposes of the parallel amendments to ERISA made by section 701(a) of PPA '06.[1]

Section 701(c) of PPA '06 added provisions to the Age Discrimination in Employment Act of 1967, Public Law 90–202 (81 Stat. 602 (1967)) (ADEA), that are parallel to section 411(b)(5) of the Code. Executive Order 12067 requires all Federal departments and agencies to advise and offer to consult with the Equal Employment Opportunity Commission (EEOC) during the development of any proposed rules, regulations, policies, procedures, or orders concerning equal employment opportunity. The Treasury Department and the IRS have consulted with the EEOC prior to the issuance of these regulations.

Section 701(d) of PPA '06 provides that nothing in the amendments made by section 701 should be construed to create an inference concerning the treatment of applicable defined benefit plans or conversions of plans into applicable defined benefit plans under section 411(b)(1)(H), or concerning the determination of whether an applicable defined benefit plan fails to meet the requirements of section 411(a)(2), 411(c), or 417(e), as in effect before such amendments, solely because the present value of the accrued benefit (or any portion thereof) of any participant is, under the terms of the plan, equal to the amount expressed as the balance of a hypothetical account or as an accumulated percentage of the participant's final average compensation.

Section 701(e) of PPA '06 sets forth the effective date provisions with respect to amendments made by section 701 of PPA '06. Section 701(e)(1) specifies that the amendments made by section 701 generally apply to periods beginning on or after June 29, 2005. Thus, the age discrimination safe harbors under section 411(b)(5)(A) and section 411(b)(5)(E) are effective for periods beginning on or after June 29, 2005. Section 701(e)(2) provides that the special present value rules of section 411(a)(13)(A) are effective for distributions made after August 17, 2006 (the date PPA '06 was enacted).

Under section 701(e) of PPA '06, the 3-year vesting rule under section 411(a)(13)(B) is generally effective for years beginning after December 31, 2007, for a plan in existence on June 29, 2005, while, pursuant to the amendments made by section 107(c) of WRERA '08, this vesting rule is generally effective for plan years ending on or after June 29, 2005, for a plan not in existence on June 29, 2005. The market rate of return limitation under section 411(b)(5)(B)(i) is generally effective for years beginning after December 31, 2007, for a plan in existence on June 29, 2005, while the limitation is generally effective for periods beginning on or after June 29, 2005, for a plan not in existence on June 29, 2005. Section 701(e)(4) of PPA '06 contains special effective date provisions for collectively bargained plans that modify these effective dates.

Under section 701(e)(5) of PPA '06, as amended by WRERA '08, sections 411(b)(5)(B)(ii), (iii), and (iv) apply to a conversion amendment that is adopted on or after, and takes effect on or after, June 29, 2005.

Under section 701(e)(6) of PPA '06, as added by WRERA '08, the 3-year vesting rule under section 411(a)(13)(B) does not apply to a participant who does not have an hour of service after the date the 3-year vesting rule would otherwise be effective.

Section 702 of PPA '06 provides for regulations to be prescribed by August 16, 2007, addressing the application of rules set forth in section 701 of PPA '06 where the conversion of a defined benefit pension plan into an applicable defined benefit plan is made with respect to a group of employees who become employees by reason of a merger, acquisition, or similar transaction.

Under section 1107 of PPA '06, a plan sponsor is permitted to delay adopting a plan amendment pursuant to statutory provisions under PPA '06 (or pursuant to any regulation issued under PPA '06) until the last day of the first plan year beginning on or after January 1, 2009 (January 1, 2011, in the case of governmental plans). As described in Rev. Proc. 2007–44 (2007–28 IRB 54), this amendment deadline applies to both interim and discretionary amendments that are made pursuant to PPA '06 statutory provisions or any regulation issued under PPA '06. *See* § 601.601(d)(2)(ii)(*b*).

Section 1107 of PPA '06 also permits certain amendments to reduce or eliminate section 411(d)(6) protected benefits. Except to the extent permitted under section 1107 of PPA '06 (or under another statutory provision, including section 411(d)(6) and §§ 1.411(d)–3 and 1.411(d)–4), section 411(d)(6) prohibits a plan amendment that decreases a participant's accrued benefits or that has the effect of eliminating or reducing an early retirement benefit or retirement-type subsidy, or eliminating an optional form of benefit, with respect to benefits attributable to service before the amendment. However, an amendment that eliminates or decreases benefits that have not yet accrued does not violate section 411(d)(6), provided that the amendment is adopted and effective before the benefits accrue. If section 1107 of PPA '06 applies to an amendment of a plan, section 1107 provides that the plan does not fail to meet the requirements of section 411(d)(6) by reason of such amendment, except as provided by the Secretary of the Treasury.

Proposed regulations (EE–184–86) under sections 411(b)(1)(H) and 411(b)(2) were published by the Treasury Department and the IRS in the **Federal Register** on April 11, 1988 (53 FR 11876), as part of a package of regulations that also included proposed regulations under sections 410(a), 411(a)(2), 411(a)(8), and 411(c) (relating to the maximum age for participation, vesting, normal retirement age, and actuarial adjustments after normal retirement age, respectively).[2]

Notice 96–8 (1996–1 CB 359), see § 601.601(d)(2)(ii)(*b*), described the application of sections 411 and 417(e) to a single-sum distribution under a cash balance plan where interest credits under the plan are frontloaded (that is, where the right to future interest credits with respect to an employee's hypothetical account balance is not conditioned upon future service and thus accrues at the same time that the benefits attributable to a hypothetical allocation to the account accrue). Under the analysis set forth in Notice 96–8, in order to comply with sections 411(a) and 417(e) in calculating the amount of

[1] Under section 101 of Reorganization Plan No. 4 of 1978 (43 FR 47713), the Secretary of the Treasury has interpretive jurisdiction over the subject matter addressed by these regulations for purposes of ERISA, as well as the Code.

[2] On December 11, 2002, the Treasury Department and the IRS issued proposed regulations regarding the age discrimination requirements of section 411(b)(1)(H) that specifically addressed cash balance plans as part of a package of regulations that also addressed section 401(a)(4) nondiscrimination cross-testing rules applicable to cash balance plans (67 FR 76123). The 2002 proposed regulations were intended to replace the 1988 proposed regulations. In Ann. 2003–22 (2003–1 CB 847), see § 601.601(d)(2)(ii)(*b*), the Treasury Department and the IRS announced the withdrawal of the 2002 proposed regulations under section 401(a)(4), and in Ann. 2004–57 (2004–2 CB 15), see § 601.601(d)(2)(ii)(*b*), the Treasury Department and the IRS announced the withdrawal of the 2002 proposed regulations relating to age discrimination.

a single-sum distribution under a cash balance plan, the balance of an employee's hypothetical account must be projected to normal retirement age and converted to an annuity under the terms of the plan, and then the employee must be paid at least the present value of the projected annuity, determined in accordance with section 417(e). Under that analysis, where a cash balance plan provides frontloaded interest credits using an interest rate that is higher than the section 417(e) applicable interest rate, payment of a single-sum distribution equal to the current hypothetical account balance as a complete distribution of the employee's accrued benefit may result in a violation of section 417(e) or a forfeiture in violation of section 411(a). In addition, Notice 96–8 proposed a safe harbor which provided that, if frontloaded interest credits are provided under a plan at a rate no greater than the sum of identified standard indices and associated margins, no violation of section 411(a) or 417(e) would result if the employee's entire accrued benefit were to be distributed in the form of a single-sum distribution equal to the employee's hypothetical account balance, provided the plan uses appropriate annuity conversion factors. Since the issuance of Notice 96–8, four Federal appellate courts have followed the analysis set out in the Notice: *Esden* v. *Bank of Boston,* 229 F.3d 154 (2d Cir. 2000), *cert. dismissed,* 531 U.S. 1061 (2001); *West* v. *AK Steel Corp. Ret. Accumulation Pension Plan,* 484 F.3d 395 (6th Cir. 2007), *cert. denied,* 129 S. Ct. 895 (2009); *Berger* v. *Xerox Corp. Ret. Income Guarantee Plan,* 338 F.3d 755 (7th Cir. 2003), *reh'g and reh'g en banc denied,* No. 02–3674, 2003 U.S. App. LEXIS 19374 (7th Cir. Sept. 15, 2003); *Lyons* v. *Georgia-Pacific Salaried Employees Ret. Plan,* 221 F.3d 1235 (11th Cir. 2000), *cert. denied,* 532 U.S. 967 (2001).

Notice 2007–6 (2007–1 CB 272), *see* § 601.601(d)(2)(ii)(*b*), provides transitional guidance with respect to certain requirements of sections 411(a)(13) and 411(b)(5) and section 701(b) of PPA '06. Notice 2007–6 includes certain special definitions, including: Accumulated benefit, which is defined as a participant's benefit accrued to date under a plan; lump sum-based plan, which is defined as a defined benefit plan under the terms of which the accumulated benefit of a participant is expressed as the balance of a hypothetical account maintained for the participant or as the current value of the accumulated percentage of the participant's final average compensation; and statutory hybrid plan, which is defined as a lump sum-based plan or a plan which has an effect similar to a lump sum-based plan. Notice 2007–6 provides guidance on a number of issues, including a rule under which a plan that provides for indexed benefits described in section 411(b)(5)(E) is a statutory hybrid plan (because it has an effect similar to a lump sum-based plan), unless the plan either solely provides for post-retirement adjustment of the amounts payable to a participant or is a variable annuity plan under which the assumed interest rate used to determine adjustments is at least 5 percent. Notice 2007–6 provides a safe harbor for applying the rules set forth in section 701 of PPA '06 where the conversion of a defined benefit pension plan into an applicable defined benefit plan is made with respect to a group of employees who become employees by reason of a merger, acquisition, or similar transaction. This transitional guidance, along with the other guidance provided in Part III of Notice 2007–6, applies pending the issuance of further guidance and, thus, does not apply for periods to which these final regulations apply.

Proposed regulations (REG–104946–07) under sections 411(a)(13) and 411(b)(5) (2007 proposed regulations) were published by the Treasury Department and the IRS in the **Federal Register** on December 28, 2007 (72 FR 73680). The Treasury Department and the IRS received written comments on the 2007 proposed regulations and a public hearing was held on June 6, 2008.

Announcement 2009–82 (2009–48 IRB 720) and Notice 2009–97 (2009–52 IRB 972), *see* § 601.601(d)(2)(ii)(*b*), announced certain expected relief with respect to the requirements of section 411(b)(5). In particular, Announcement 2009–82 stated that the rules in the regulations specifying permissible market rates of return are not expected to go into effect before the first plan year that begins on or after January 1, 2011. In addition, Notice 2009–97 stated that, once final regulations under sections 411(a)(13) and 411(b)(5) are issued, it is expected that relief from the requirements of section 411(d)(6) will be granted for a plan amendment that eliminates or reduces a section 411(d)(6) protected benefit, provided that the amendment is adopted by the last day of the first plan year that begins on or after January 1, 2010, and the elimination or reduction is made only to the extent necessary to enable the plan to meet the requirements of section 411(b)(5).[3] Notice 2009–97 also extended the deadline for amending cash balance and other applicable defined benefit plans, within the meaning of section 411(a)(13)(C), to meet the requirements of section 411(a)(13) (other than section 411(a)(13)(A)) and section 411(b)(5), relating to vesting and other special rules applicable to these plans. Under Notice 2009–97, the deadline for these amendments is the last day of the first plan year that begins on or after January 1, 2010.

After consideration of the comments received in response to the 2007 proposed regulations, these final regulations generally adopt the provisions of the 2007 proposed regulations with certain modifications as described under the heading "Explanation of Provisions." In addition, the Treasury Department and the IRS are issuing proposed regulations (2010 proposed regulations) that address certain issues under sections 411(a)(13) and 411(b)(5) that have not been addressed in these final regulations (and that are generally indicated as "RESERVED" in these final regulations), and that also address a related issue under section 411(b)(1). The 2010 proposed regulations are being issued at the same time as these final regulations.

Explanation of Provisions

Overview

In general, these final regulations incorporate the transitional guidance provided under Notice 2007–6 as well as the provisions of the 2007 proposed regulations. The regulations adopt the terminology used in the proposed regulations (such as "statutory hybrid benefit formula" and "lump sum-based benefit formula") to take into account situations where plans provide more than one benefit formula. These regulations also provide additional guidance with respect to sections 411(a)(13) and 411(b)(5), taking into account comments received in response to the 2007 proposed regulations and also reflecting the enactment of WRERA '08.

I. Section 411(a)(13): Applicable Definitions, Relief of Section 411(a)(13)(A), and Special Vesting Rules for Applicable Defined Benefit Plans

A. Definitions

The regulations under section 411(a)(13) contain certain definitions

[3] However, see footnote 6 in the preamble to the 2010 proposed regulations described in the next paragraph.

that apply both for purposes of the regulations under section 411(a)(13) and the regulations under section 411(b)(5). Section 411(b)(5)(G) provides that, for purposes of section 411(b)(5), any reference to the accrued benefit means the benefit accrued to date. The final regulations refer to this as the "accumulated benefit", which is distinct from the participant's accrued benefit under section 411(a)(7) (an annuity beginning at normal retirement age that is actuarially equivalent to the participant's accumulated benefit). As in the 2007 proposed regulations, the regulations use the term "statutory hybrid plan" to refer to an applicable defined benefit plan described in section 411(a)(13)(C). Under the regulations, a statutory hybrid plan is a defined benefit plan that contains a statutory hybrid benefit formula, and a "statutory hybrid benefit formula" is a benefit formula that is either a lump sum-based benefit formula or a formula that has an effect similar to a lump sum-based benefit formula.

The regulations define a "lump sum-based benefit formula" as a benefit formula used to determine all or any part of a participant's accumulated benefit under which the accumulated benefit provided under the formula is expressed as the current balance of a hypothetical account maintained for the participant or as the current value of the accumulated percentage of the participant's final average compensation. The final regulations adopt the rules of the 2007 proposed regulations whereby the determination as to whether a benefit formula is a lump sum-based benefit formula is made based on how the accumulated benefit of a participant is expressed under the terms of the plan, and does not depend on whether the plan provides an optional form of benefit in the form of a single-sum payment. Similarly, a formula does not fail to be a lump sum-based benefit formula merely because the plan's terms state that the participant's accrued benefit is an annuity at normal retirement age that is actuarially equivalent to the balance of a hypothetical account maintained for the participant.

The preamble to the 2007 proposed regulations asked for comments on plan formulas that calculate benefits as the current value of an accumulated percentage of the participant's final average compensation (often referred to as "pension equity plans" or "PEPs"). Commenters indicated that some of these plans never credit interest, directly or indirectly, some explicitly credit interest after cessation of PEP accruals, and some do not credit interest explicitly but provide for specific amounts to be payable after cessation of accruals (both immediately and at future dates) based on actuarial equivalence using specified actuarial factors applied after cessation of accruals.

In response to these comments, the final regulations clarify that a benefit formula is expressed as the balance of a hypothetical account maintained for the participant if it is expressed as a current single-sum dollar amount. A lump sum-based benefit formula that credits interest is subject to the market rate of return rules, so that in any case in which a PEP formula provides for interest credits after cessation of PEP accruals, the interest credits are subject to the market rate of return rules.

The 2007 proposed regulations contained a rule whereby a benefit formula would not have been treated as a lump sum-based benefit formula with respect to a participant merely because the participant is entitled to a benefit that is not less than the benefit properly attributable to after-tax employee contributions. In response to comments received that this rule be broadened, the final regulations provide that the benefit properly attributable to after-tax employee contributions, rollover contributions, and other similar employee contributions is disregarded when determining whether a benefit formula is a lump sum-based benefit formula with respect to a participant. Thus, for example, a plan is not a statutory hybrid plan with a lump sum-based benefit formula with respect to a participant merely because the plan provides that the participant's benefit is equal to the sum-of or greater-of the benefit properly attributable to employee contributions and the benefit under a traditional defined benefit formula.

The regulations provide that a benefit is not properly attributable to employee contributions if such contributions are credited with interest at a rate that exceeds a reasonable rate of interest or if the conversion factors used to calculate the benefit based on such employee contributions are not actuarially reasonable. The regulations clarify that section 411(c) merely provides an example of an acceptable methodology for purposes of determining the benefit that is properly attributable to employee contributions.

The 2007 proposed regulations provided that a benefit formula under a defined benefit plan has an effect similar to a lump sum-based benefit formula if the formula provides that a participant's accumulated benefit payable at normal retirement age (or at benefit commencement, if later) is expressed as a benefit that includes periodic adjustments (including a formula that provides for indexed benefits described in section 411(b)(5)(E)) that are reasonably expected to result in a smaller annual benefit at normal retirement age (or at benefit commencement, if later) for the participant, when compared to a similarly situated, younger individual who is or could be a participant in the plan. A number of commenters suggested that the rule in the 2007 proposed regulations was too broad generally and also suggested that certain types of plans, such as plans described in section 411(b)(5)(E), be exempted entirely. However, the Treasury Department and the IRS believe that a key purpose of sections 411(a)(13) and 411(b)(5) is to address defined benefit plan formulas where younger participants receive a larger annual benefit at normal retirement age when compared to similarly situated, older participants. Therefore, the final regulations do not significantly narrow the definition of a benefit formula that has an effect similar to a lump sum-based benefit formula.

The regulations clarify that a benefit formula under a defined benefit plan has an effect similar to a lump sum-based benefit formula if the formula provides that a participant's accumulated benefit is expressed as a benefit that includes adjustments (including a formula that provides for indexed benefits described in section 411(b)(5)(E)) for a future period and the total dollar amount of the adjustments is reasonably expected to be smaller for the participant, when compared to a similarly situated, younger individual who is or could be a participant in the plan. Thus, a formula that provides that a participant's accumulated benefit is expressed as a benefit that includes the right to periodic adjustments is treated as having an effect similar to a lump sum-based benefit formula based on a comparison of the expected total dollar amount of the adjustments through benefit commencement, rather than the expected total accumulated benefit after application of these adjustments.

As in the 2007 proposed regulations, the regulations provide that a benefit formula under a plan has an effect similar to a lump sum-based benefit formula where the right to future adjustments accrues at the same time as the benefit that is subject to those adjustments. In addition, the regulations provide that a benefit formula that does not include adjustments is nevertheless treated as a formula with an effect similar to a lump sum-based benefit formula where benefits are adjusted

pursuant to a pattern of repeated plan amendments and the total dollar amount of those adjustments is reasonably expected to be smaller for the participant than for any similarly situated, younger individual who is or could be a participant. *See* § 1.411(d)–4, A–1(c)(1).

Like the 2007 proposed regulations, the regulations provide that certain benefits are disregarded when determining whether a benefit formula has an effect similar to a lump sum-based benefit formula. For example, the regulations provide that, for purposes of determining whether a benefit formula has an effect similar to a lump sum-based benefit formula, indexing that applies to adjust benefits after the annuity starting date (for example, cost-of-living increases) is disregarded. In addition, benefits properly attributable to certain employee contributions that are disregarded for purposes of determining whether a participant is treated as having a lump-sum based benefit formula are also disregarded for purposes of determining whether a formula has an effect similar to a lump sum-based benefit formula.

The regulations include an example that illustrates that a defined benefit formula is not treated as a statutory hybrid benefit formula merely because the formula provides for actuarial increases after normal retirement age. This is because actuarial increases after normal retirement age do not provide smaller adjustments for older participants when compared to similarly situated, younger participants.

The 2007 proposed regulations provided that variable annuity benefit formulas with assumed interest rates (sometimes referred to as "hurdle rates") of at least 5 percent are not treated as having an effect similar to a lump sum-based benefit formula. A number of commenters requested that the regulations extend this rule to variable annuity plans with lower hurdle rates. However, plans with lower hurdle rates are more likely to provide positive adjustments for future periods than plans with higher hurdle rates and, as a result, younger participants are more likely to receive a meaningfully larger total dollar amount of adjustments than older participants under these plans. The Treasury Department and the IRS are concerned that exempting these plans would mean that participants would lose the protections afforded to participants in statutory hybrid plans (including 3-year vesting and conversion protection). Therefore, the final regulations retain the rule whereby adjustments under a variable annuity do not have an effect similar to a lump sum-based benefit formula if the assumed interest rate used to determine the adjustments is 5 percent or higher. Such an annuity does not have an effect similar to a lump sum-based benefit formula even if post-annuity starting date adjustments are made using a specified assumed interest rate that is less than 5 percent.

B. Relief Under Section 411(a)(13)(A)

The regulations reflect new section 411(a)(13)(A) by providing that a statutory hybrid plan is not treated as failing to meet the requirements of section 411(a)(2), or, with respect to the participant's accrued benefit derived from employer contributions, the requirements of sections 411(a)(11), 411(c), or 417(e), merely because the plan provides that the present value of benefits as determined under a lump sum-based benefit formula is equal to the then-current balance of the hypothetical account maintained for the participant or the then-current value of the accumulated percentage of the participant's final average compensation under that formula. However, section 411(a)(13) does not alter the definition of the accrued benefit under section 411(a)(7)(A) (which generally defines the participant's accrued benefit as the annual benefit commencing at normal retirement age), nor does it alter the definition of the normal retirement benefit under section 411(a)(9) (which generally defines the participant's normal retirement benefit as the benefit under the plan commencing at normal retirement age).

Section 411(a)(13)(A) applies only with respect to a benefit provided under a lump sum-based benefit formula. A statutory hybrid plan that provides benefits under a benefit formula that is a statutory hybrid benefit formula other than a lump sum-based benefit formula (such as a plan that provides for indexing as described in section 411(b)(5)(E)) must comply with the present value rules of section 417(e) with respect to an optional form of benefit that is subject to the requirements of section 417(e).

The regulations do not provide guidance as to how section 411(a)(13)(A) applies with respect to payments that are not made in the form of a single-sum distribution of the hypothetical account balance or accumulated percentage of final average compensation, such as payments made in the form of an annuity. That issue is being addressed in the 2010 proposed regulations.

C. Special Vesting Rules for Applicable Defined Benefit Plans

Pursuant to section 411(a)(13)(B), the regulations provide that, in the case of a participant whose accrued benefit (or any portion thereof) under a defined benefit plan is determined under a statutory hybrid benefit formula, the plan is treated as failing to satisfy the requirements of section 411(a)(2) unless the plan provides that the participant has a nonforfeitable right to 100 percent of the participant's accrued benefit derived from employer contributions if the participant has 3 or more years of service. As in the 2007 proposed regulations, the final regulations provide that this requirement applies on a participant-by-participant basis and applies to the participant's entire benefit derived from employer contributions under a statutory hybrid plan (not just the portion of the participant's benefit that is determined under a statutory hybrid benefit formula). Furthermore, the regulations retain the rule under which, if a participant is entitled to the greater of two (or more) benefit amounts under a plan, where each amount is determined under a different benefit formula (including a benefit determined pursuant to an offset among formulas within the plan or a benefit determined as the greater of a protected benefit under section 411(d)(6) and another benefit amount), at least one of which is a benefit calculated under a statutory hybrid benefit formula, the 3-year vesting requirement applies to that participant's entire accrued benefit under the plan even if the participant's benefit under the statutory hybrid benefit formula is ultimately smaller than under the other formula.

The 2007 proposed regulations requested comments regarding the application of the 3-year vesting requirement to a floor plan that is not a statutory hybrid plan but that is part of a floor-offset arrangement with an independent plan that is a statutory hybrid plan. A number of commenters suggested that the 3-year vesting requirement should apply on a plan-by-plan basis, without regard to whether a plan is part of a floor-offset arrangement. In contrast, one commenter suggested that the 3-year vesting requirement should apply to both plans that are part of a floor-offset arrangement even if only one of the plans is a statutory hybrid plan, because the commenter felt that determining the amount of the offset in an arrangement involving plans with different vesting schedules would be inherently difficult. However, this concern is mitigated because, in the view of the Treasury

Department and the IRS, a floor-offset arrangement where the benefit payable under a floor plan is reduced by the benefit payable under an independent plan is only permissible if the arrangement limits the offset to amounts that are vested under the independent plan.[4] Therefore, the regulations retain the rule whereby the 3-year vesting requirement is limited to plans that contain a statutory hybrid benefit formula and provide an example illustrating this rule with respect to a floor-offset arrangement where the benefit payable under a floor plan that does not include a statutory hybrid benefit formula is reduced by the vested accrued benefit payable under an independent plan that includes a statutory hybrid benefit formula.

II. Section 411(b)(5): Safe Harbor for Age Discrimination, Conversion Protection, and Market Rate of Return Limitation

A. Safe Harbor for Age Discrimination

The regulations reflect new section 411(b)(5)(A), which provides that a plan is not treated as failing to meet the requirements of section 411(b)(1)(H)(i) with respect to certain benefit formulas if, as determined as of any date, a participant's accumulated benefit expressed under one of those formulas would not be less than any similarly situated, younger participant's accumulated benefit expressed under the same formula. A plan that does not satisfy this test is required to satisfy the general age discrimination rule of section 411(b)(1)(H)(i).

As in the 2007 proposed regulations, the regulations provide that the safe harbor standard under section 411(b)(5)(A) is available only where a participant's accumulated benefit under the terms of the plan is expressed as an annuity payable at normal retirement age (or current age, if later), the current balance of a hypothetical account, or the current value of the accumulated percentage of the employee's final average compensation. For this purpose, if the accumulated benefit of a participant is expressed as an annuity payable at normal retirement age (or current age, if later) under the plan terms, then the comparison of benefits is made using such an annuity. Similarly, if the accumulated benefit of a participant is expressed under the plan terms as the current balance of a hypothetical account or the current value of an accumulated percentage of the participant's final average compensation, then the comparison of benefits is made using the current balance of a hypothetical account or the current value of the accumulated percentage of the participant's final average compensation, respectively.

The regulations require a comparison of the accumulated benefit of each possible participant in the plan to the accumulated benefit of each other similarly situated, younger individual who is or could be a participant in the plan. For this purpose, as in the 2007 proposed regulations, the regulations provide that an individual is similarly situated to another individual if the individual is identical to that other individual in every respect that is relevant in determining a participant's benefit under the plan (including, but not limited to, period of service, compensation, position, date of hire, work history, and any other respect) except for age. In determining whether an individual is similarly situated to another individual, any characteristic that is relevant for determining benefits under the plan and that is based directly or indirectly on age is disregarded. For example, if a particular benefit formula applies to a participant on account of the participant's age, an individual to whom the benefit formula does not apply and who is identical to a participant in all respects other than age is similarly situated to the participant. By contrast, an individual is not similarly situated to a participant if a different benefit formula applies to the individual and the application of the different formula is based neither directly nor indirectly on age. For example, if the benefit formula under a plan is changed from one type to another for employees hired after the effective date of the change, employees hired after the relevant date would not be similarly situated with employees hired before that date because the benefit formula for new hires is not based directly nor indirectly on age.

The comparison of accumulated benefits is made without regard to any subsidized portion of any early retirement benefit that is included in a participant's accumulated benefit. For this purpose, the subsidized portion of an early retirement benefit is the retirement-type subsidy within the meaning of § 1.411(d)–3(g)(6) that is contingent on a participant's severance from employment and commencement of benefits before normal retirement age.

In addition, like the 2007 proposed regulations, the regulations provide that the safe harbor is generally not available with respect to a participant if the benefit of any similarly situated, younger individual is expressed in a different form than the participant's benefit. Thus, for example, the safe harbor is not available for comparing the accumulated benefit of a participant expressed as an annuity at normal retirement age with the accumulated benefit of a similarly situated, younger participant expressed as the current balance of a hypothetical account.

Like the 2007 proposed regulations, the regulations generally permit a plan that provides the sum-of or the greater-of benefits that are expressed in two or more different forms of benefit to satisfy the safe harbor if the plan would separately satisfy the safe harbor for each separate form of benefit. For purposes of the safe harbor comparisons involving greater-of and sum-of benefit formulas, the 2007 proposed regulations contained a rule where a similarly situated, younger participant would be treated as having an accumulated benefit of zero under a benefit formula that does not apply to the participant. While the sum-of and greater-of provisions are organized differently in these regulations, the regulations effectively retain this rule because sum-of and greater-of formulas are eligible for the safe harbor even where older participants receive benefits expressed in a different form than the benefits of similarly situated, younger participants, as long as younger participants are not entitled to benefits expressed in a different form than the benefits of similarly situated, older participants.

Several commenters requested that the regulations clarify that the safe harbor is also available to plans that allow older participants to choose, at the time a new statutory hybrid benefit formula goes into effect, whether to receive a benefit under the statutory hybrid benefit formula or under the pre-existing traditional defined benefit formula. In response to such comments, the regulations adopt similar rules as the sum-of and greater-of rules for plans that provide participants with the choice of benefits that are expressed in two or more different forms.

As part of the sum-of, greater-of, and choice-of rules, the regulations reflect the fact that the sum of benefits expressed in two or more forms is never less than the greater of the same benefits and that the greater of benefits expressed in two or more forms is never less than the choice of the same benefits. As a result, the regulations provide that in order for the safe harbor to be available with respect to a participant who is provided with the greater of benefits expressed in two or more different forms, the plan must not provide any similarly situated, younger participant with the sum of the same

[4] *See* Rev. Rul. 76–259 (1976–2 CB 111), *see* § 601.601(d)(2)(ii)(*b*).

benefits. Similarly, the regulations provide that in order for the safe harbor to be available with respect to a participant who is provided with the choice of benefits expressed in two or more different forms, the plan must not provide any similarly situated, younger participant with either the sum of or the greater of the same benefits. In addition, in order for the safe harbor to be available, the plan cannot provide for any other relationship between benefits expressed in different forms other than sum-of, greater-of, or choice-of benefits.

The regulations reflect new section 411(b)(5)(C), which provides that a plan is not treated as failing to meet the requirements of section 411(b)(1)(H) solely because the plan provides offsets of benefits under the plan to the extent such offsets are allowable in applying the requirements under section 401 and the applicable requirements of ERISA and ADEA. The regulations incorporate the provisions of section 411(b)(5)(D) (relating to permitted disparity under section 401(l)) without providing additional guidance. These rules are unchanged from the 2007 proposed regulations.

The regulations contain a number of new examples that illustrate the application of the safe harbor under various fact patterns. One of these examples illustrates that the safe harbor is not satisfied in the case of a plan that contains a suspension of benefits provision that reduces or eliminates interest credits for participants who continue in service after normal retirement age.

The regulations also reflect new section 411(b)(5)(E), which provides for the disregard of certain indexing of benefits for purposes of the age discrimination rules of section 411(b)(1)(H). As in the 2007 proposed regulations, the regulations limit the disregard of indexing to formulas under defined benefit plans other than lump sum-based formulas. In addition, the regulations clarify that the disregard of indexing is limited to situations in which the extent of the indexing for a participant would not be less than the indexing applicable to a similarly situated, younger participant. Thus, the disregard of indexing is only available if the indexing is neither terminated nor reduced on account of the attainment of any age.

Section 411(b)(5)(E) requires that the indexing be accomplished by application of a recognized investment index or methodology. The 2007 proposed regulations limited a recognized investment index or methodology to an eligible cost-of-living index as described in § 1.401(a)(9)–6, A–14(b), the rate of return on the aggregate assets of the plan, or the rate of return on the annuity contract for the employee issued by an insurance company licensed under the laws of a State. The final regulations expand the list of what constitutes a recognized index or methodology by treating any rate of return that satisfies the market rate of return rules under these regulations as a recognized index or methodology.

As under the 2007 proposed regulations, the section 411(b)(5)(E)(ii) protection against loss ("no-loss") requirement for an indexed plan (which requires that the indexing not result in a smaller accrued benefit than if no indexing had applied) is implemented under the final regulations by applying the "preservation of capital" rule of section 411(b)(5)(B)(i)(II) to indexed plans. (The preservation of capital rule is discussed in section II. C. of this preamble.) The final regulations clarify that variable annuity benefit formulas (as defined in the regulations) are exempt from the no-loss and preservation of capital rules.

B. Conversion Protection

The regulations provide guidance on the new conversion protections under section 411(b)(5)(B)(ii), (iii), and (iv) which is similar to the 2007 proposed regulations. Under the regulations, a participant whose benefits are affected by a conversion amendment that was both adopted and effective on or after June 29, 2005, must generally be provided with a benefit after the conversion that is at least equal to the sum of the benefits accrued through the date of the conversion and benefits earned after the conversion, with no permitted interaction between these two portions. This assures participants that there will be no "wear-away" as a result of a conversion, both with respect to the participant's accrued benefits and any early retirement subsidy to which the participant is entitled based on the pre-conversion benefits.

The 2007 proposed regulations included an alternative mechanism under which a plan could provide for the establishment of an opening hypothetical account balance or opening accumulated percentage of the participant's final average compensation as part of the conversion and keep separate track of (1) the benefit attributable to the opening hypothetical account balance (including interest credits attributable thereto) or attributable to the opening accumulated percentage of the participant's final average compensation and (2) the benefit attributable to post-conversion service under the post-conversion benefit formula. Comments on this rule were favorable and it is retained under the final regulations. A variety of examples illustrating application of the alternative are included in the regulations. Under this alternative, when a participant commences benefits, it must be determined whether the benefit attributable to the opening hypothetical account or attributable to the opening accumulated percentage that is payable in the particular optional form of benefit selected is greater than or equal to the benefit accrued under the plan prior to the date of conversion and that was payable in the same generalized optional form of benefit (within the meaning of § 1.411(d)–3(g)(8)) at the same annuity starting date. If the benefit attributable to the opening hypothetical account balance or opening accumulated percentage is greater, then the plan must provide that such benefit is paid in lieu of the pre-conversion benefit, in addition to the benefit attributable to post-conversion service under the post-conversion benefit formula. If the benefit attributable to the opening hypothetical account balance or opening accumulated percentage is less, then the plan must provide that such benefit will be increased sufficiently to provide the pre-conversion benefit, in addition to the benefit attributable to post-conversion service under the post-conversion benefit formula.

As in the 2007 proposed regulations, the final regulations provide under this alternative that, if an optional form of benefit is available on the annuity starting date with respect to the benefit attributable to the opening hypothetical account balance or opening accumulated percentage, but no optional form (such as a single-sum distribution) within the same generalized optional form of benefit was available at that annuity starting date under the terms of a plan as in effect immediately prior to the effective date of the conversion amendment, then the comparison must still be made by assuming that the pre-conversion plan had such an optional form of benefit.

The preamble to the 2007 proposed regulations asked for comments on another alternative means of satisfying the conversion requirements that would involve establishing an opening hypothetical account balance, but would not require a comparison of benefits at the annuity starting date if certain requirements are met. Comments on this alternative were favorable, but some commenters requested that the alternative only be available where there was sufficient protection to ensure that

participants' benefits would not be less than would apply under the rules in the 2007 proposed regulations. While these final regulations do not permit this additional alternative, it is included in the 2010 proposed regulations.

The regulations also provide guidance that is unchanged from the 2007 proposed regulations on what constitutes a conversion amendment under section 411(b)(5)(B)(v). Under the final regulations, whether an amendment is a conversion amendment is determined on a participant-by-participant basis. The regulations provide that an amendment (including multiple amendments) is a conversion amendment with respect to a participant if it meets two criteria: (1) The amendment reduces or eliminates the benefits that, but for the amendment, the participant would have accrued after the effective date of the amendment under a benefit formula that is not a statutory hybrid benefit formula and under which the participant was accruing benefits prior to the amendment; and (2) after the effective date of the amendment, all or a portion of the participant's benefit accruals under the plan are determined under a statutory hybrid benefit formula.

The regulations clarify that only amendments that reduce or eliminate accrued benefits described in section 411(a)(7), or retirement-type subsidies described in section 411(d)(6)(B)(i), that would otherwise accrue as a result of future service are treated as amendments that reduce or eliminate the participant's benefits that would have accrued after the effective date of the amendment under a benefit formula that is not a statutory hybrid benefit formula. As under the 2007 proposed regulations, a plan is treated as having been amended for this purpose if, under the terms of the plan, a change in the conditions of a participant's employment results in a reduction or elimination of the benefits that the participant would have accrued in the future under a benefit formula that is not a statutory hybrid benefit formula (for example, a job transfer from an operating division covered by a non-statutory hybrid defined benefit plan to an operating division that is covered by a formula expressed as the balance of a hypothetical account). However, in the absence of coordination between the formulas, the special requirements for conversion amendments typically will be satisfied automatically.

A number of commenters recommended that the effective date of a conversion amendment generally be the date accruals begin under a statutory hybrid benefit formula, rather than the date that future accruals are reduced under the non-statutory hybrid benefit formula. Several commenters suggested that, if this recommendation was not implemented generally, it should nevertheless apply at the effective date of an amendment which provides participants with the greater of benefits under the prior formula and a statutory hybrid benefit formula for a period of time before benefit accruals cease under the prior formula, especially if the amendment applies to a subgroup of existing older, long service employees. However, some comments expressed concern that such a change in the proposed definition of the effective date of a conversion amendment would allow plans to delay the statutory anti-wearaway protections by adding a less valuable cash balance benefit for the grandfathered group at a date, even though "the effect of converting" (within the meaning of section 411(b)(5)(B)(v)(I)) their traditional benefit into a cash balance benefit would occur for them at the later date when their benefit accruals cease under the prior formula.

The Treasury Department and the IRS are concerned that the requested change in the proposed rule would circumvent a key purpose behind the conversion protection requirements by allowing for a delayed wear-away that would occur at the time accruals cease under the prior formula. For example, if a plan were generally converted to a cash balance plan, but the plan were to provide for some class of participants, such as participants who are age 55 or older, to receive the greater of accruals under the prior formula or the new cash balance formula for a period of 5 years, the change requested in the comments would define the effective date of the conversion amendment for all participants to be the date the cash balance formula went into effect (rather than applying a participant by participant rule). As a result, 5 years after the cash balance formula went into effect, the hypothetical account balance for these older participants could provide benefits that are less than the frozen amount under the prior formula, a circumstance that would produce no additional accruals for some period of time after the end of the 5-year period. Therefore, the approach suggested by these comments would allow the type of wear-away the statute was intended to prevent. Accordingly, like the 2007 proposed regulations, the regulations adopt a rule whereby the effective date of a conversion amendment is, with respect to a participant, the date as of which the reduction occurs in the benefits that the participant would have accrued after the effective date of the amendment under a benefit formula that is not a statutory hybrid benefit formula. In accordance with section 411(d)(6), the regulations provide that the date future benefit accruals are reduced cannot be earlier than the date of adoption of the conversion amendment.

The regulations provide rules, similar to those in the 2007 proposed regulations, prohibiting the avoidance of the conversion protections through the use of multiple plans or multiple employers. Under these rules, an employer is treated as having adopted a conversion amendment if the employer adopts an amendment under which a participant's benefits under a plan that is not a statutory hybrid plan are coordinated with a separate plan that is a statutory hybrid plan, such as through a reduction (offset) of the benefit under the plan that is not a statutory hybrid plan. In addition, if an employee's employer changes as a result of a merger, acquisition, or other transaction described in § 1.410(b)–2(f), then the employee's old and new employers would be treated as a single employer for this purpose. Thus, for example, in an acquisition, if the buyer adopts an amendment to its statutory hybrid plan under which a participant's benefits under the seller's plan (that is not a statutory hybrid plan) are coordinated with benefits under the buyer's plan, such as through a reduction (offset) of the buyer's plan benefits, the seller and buyer would be treated as a single employer and as having adopted a conversion amendment. However, if there is no coordination between the plans, there is no conversion amendment.

The regulations retain the rule from the 2007 proposed regulations under which a conversion amendment also includes multiple amendments that result in a conversion amendment, even if the amendments would not be conversion amendments individually. If an amendment to provide a benefit under a statutory hybrid benefit formula is adopted within 3 years after adoption of an amendment to reduce benefits under a non-statutory hybrid benefit formula, then those amendments would be consolidated in determining whether a conversion amendment has been adopted. In the case of an amendment to provide a benefit under a statutory hybrid benefit formula that is adopted more than 3 years after adoption of an amendment to reduce non-statutory hybrid benefit formula benefits, there is a presumption that the amendments are not consolidated unless the facts and circumstances indicate that adoption of an amendment to provide a benefit

under a statutory hybrid benefit formula was intended at the time of the reduction in the non-statutory hybrid benefit formula benefits.

A number of commenters expressed concern that the interaction between employee transfers and the conversion protection effective date provisions was unclear under the 2007 proposed regulations. In response to such comments, the regulations clarify that a conversion amendment must be both adopted on or after June 29, 2005, and be effective on or after June 29, 2005, in order for the conversion protection provisions to apply to such amendment. Therefore, if a transfer provision was adopted before June 29, 2005, an employee transfer is not treated as part of a conversion amendment to which the conversion protection provisions apply, even if the transfer occurs on or after June 29, 2005.

C. Market Rate of Return Limitation

The regulations reflect the rule in section 411(b)(5)(B)(i)(I) under which a statutory hybrid plan is treated as failing to satisfy section 411(b)(1)(H) if it provides an interest crediting rate with respect to benefits determined under a statutory hybrid benefit formula that is in excess of a market rate of return. Several commenters suggested that the definition of interest crediting rate in the 2007 proposed regulations be revised to exclude not only adjustments conditioned on current service but also adjustments made as a result of past and imputed service as well as ad hoc adjustments. In response to the comments, the regulations expand the exclusions from the definition of interest credit to also exclude adjustments made as a result of imputed service, as well as certain one-time adjustments.

The final regulations provide that an interest credit generally means any increase or decrease for a period to a participant's accumulated benefit under a statutory hybrid benefit formula, under the terms of the plan at the beginning of the period, that is calculated by applying a rate of interest or rate of return (including a rate of increase or decrease under an index) to the participant's accumulated benefit (or a portion thereof) as of the beginning of the period, to the extent the increase or decrease is not conditioned on current service and is not made on account of imputed service; as well as any other increase for a period to a participant's accumulated benefit under a statutory hybrid benefit formula, under the terms of the plan at the beginning of the period, to the extent the increase is not conditioned on current service and is not made on account of imputed service.

Under the regulations, notwithstanding the general rule described in the previous paragraph, an increase to a participant's accumulated benefit is not treated as an interest credit to the extent the increase is made as a result of a plan amendment providing for a one-time adjustment to the participant's accumulated benefit. However, a pattern of repeated plan amendments each of which provides for a one-time adjustment to a participant's accumulated benefit will cause such adjustments to be treated as provided on a permanent basis under the terms of the plan.

The interest crediting rate for a period with respect to a participant generally equals the total amount of interest credits for the period divided by the participant's accumulated benefit at the beginning of the period.

Under the regulations, a principal credit means any increase to a participant's accumulated benefit under a statutory hybrid benefit formula that is not an interest credit. As a result, a principal credit includes an increase to a participant's accumulated benefit to the extent the increase is conditioned on current service or made on account of imputed service. Thus, for example, even if the plan denominates an increase to a hypothetical account balance as an interest credit, the increase is treated as a principal credit to the extent the increase is conditioned on current service. Similarly, a principal credit includes an increase to the current value of an accumulated percentage of the participant's final average compensation. For indexed benefits, a principal credit includes an increase to the participant's accrued benefit other than an increase provided by indexing. In addition, pursuant to the rule set forth earlier, a principal credit generally includes an increase to a participant's accumulated benefit to the extent the increase is made as a result of a plan amendment providing for a one-time adjustment to the participant's accumulated benefit. Thus, for example, a principal credit includes an opening hypothetical account balance or opening accumulated percentage of the participant's final average compensation.

Consistent with the requirement under § 1.401–1(b)(1)(i) that a pension plan provide definitely determinable benefits, a plan that credits interest must specify how the plan determines interest credits and must specify how and when interest credits are credited. Under the regulations, a plan must determine the plan's interest crediting rate that will apply for each plan year (or portion of a plan year) using one of two permitted methods—either using the applicable periodic interest crediting rate that applies over the current period or, for certain rates, using the rate that applied in a specified lookback month with respect to a stability period. For this purpose, the plan's lookback month and stability period must satisfy the rules for selecting the lookback month and stability period under § 1.417(e)–1(d)(4). However, the stability period and lookback month need not be the same as those used under the plan for purposes of section 417(e)(3).

In addition, the regulations require interest credits under a plan to be provided on an annual or more frequent periodic basis and also require interest credits for each period to be credited as of the end of the period. If, under a plan, interest is credited more frequently than annually (for example, daily, monthly or quarterly) based on one of the permissible annual interest rates, then the plan does not provide an above market rate of return if the periodic interest credits are provided under an interest crediting rate that is no greater than a pro rata portion of the applicable annual interest crediting rate. However, the regulations provide a special rule whereby a plan that credits interest daily based on one of these annual rates may credit interest at a rate which is 1/360th of the applicable annual rate (instead of 1/365th) without violating the general rule of the preceding sentence. In addition, the regulations provide that interest credits based on one of these annual rates are not treated as creating an effective rate of return in excess of a market rate of return merely because an otherwise permissible interest crediting rate for a plan year is compounded more frequently than annually. Thus, for example, if a plan's terms provide for interest to be credited monthly and for the interest crediting rate to be equal to the interest rate on long-term investment grade corporate bonds and the applicable annual rate on these bonds for the plan year is 6 percent, then the accumulated benefit at the beginning of each month could be increased as a result of interest credits by as much as 0.5 percent per month during the plan year without resulting in an interest crediting rate that is in excess of a market rate of return. These rules are similar to those in the 2007 proposed regulations.

The 2007 proposed regulations provided that an interest crediting rate is not in excess of a market rate of return if it is always less than a particular interest crediting rate that meets the

market rate of return limitation. A number of commenters suggested that this rule be revised to clarify that rates that may sometimes equal but are never greater than another permissible rate are also permissible. In response to these comments, the final regulations provide that an interest crediting rate is not in excess of a market rate of return if it can never be in excess of a particular rate that meets the market rate of return limitation. Thus, a rate that is a percentage (no greater than 100 percent) of a particular rate that meets the market rate of return limitation is not in excess of a market rate of return and a rate that is a fixed amount less than a particular rate that meets the market rate of return limitation is also not in excess of a market rate of return. Similarly, an interest crediting rate is not in excess of a market rate of return if it always equals the lesser of two or more rates where at least one of the rates meets the market rate of return limitation.

In addition, the regulations clarify that a statutory hybrid plan does not provide an effective interest crediting rate that is in excess of a market rate of return merely because the plan determines an interest credit by applying different rates to different predetermined portions of the accumulated benefit, provided each rate would separately satisfy the market rate of return limitations if the rate applied to the entire accumulated benefit. Thus, under this rule, statutory hybrid plans may, in effect, provide participants with rates that are a blend of two or more rates and may also apply different rates to portions of the benefit attributable to different principal credits. However, as in the 2007 proposed regulations, the final regulations provide that interest credits that are determined by applying the greater of two or more rates generally exceed a market rate of return except under certain limited circumstances.

The regulations provide that an interest crediting rate for a plan year is not in excess of a market rate of return if it is based on the rate of interest provided under one of several specified indices. Like the 2007 proposed regulations, these rates include the rate of interest on long-term investment grade corporate bonds (as described in section 412(b)(5)(B)(ii)(II) prior to amendment by PPA '06 for plan years beginning before January 1, 2008, and the third segment rate used under section 430(h) for subsequent plan years), the interest rate on 30-year Treasury securities, the interest rates on shorter term Treasuries with the associated margins that were safe harbor rates described in Notice 96–8, as well as certain cost-of-living indices. Several commenters on the 2007 proposed regulations suggested that this list be expanded to also include all of the interest rates permissible under section 417(e). The Treasury Department and the IRS agree with this suggestion and, as a result, the regulations expand the list of safe-harbor rates to include the first and second segment rates, as defined in either section 417(e) or 430(h) and whether calculated with or without regard to the transition rules of section 417(e)(3) or 430(h)(2)(G).

The regulations provide that an interest crediting rate based on a specified index must be adjusted on at least an annual basis. These rates are market yields to maturity on outstanding bonds and, as a result, these rates do not reflect defaults nor do these rates reflect the change in the market value of an outstanding bond as a result of future changes in the interest rate environment or in a bond issuer's risk profile. Because the interest rate does not reflect the change in the market value of an outstanding bond when an issuer becomes higher risk or the bond goes into default, the bonds have been limited to investment grade bonds in the top three quality levels where the risk of default is relatively small.

The regulations also set forth certain interest crediting rates that satisfy the statutory market rate of return requirement but that are not safe harbor rates. The regulations provide that, in the case of indexed benefits as described in section 411(b)(5)(E), an interest crediting rate equal to the actual rate of return on the aggregate assets of the plan, including both positive returns and negative returns, is not in excess of a market rate of return if the plan's assets are diversified so as to minimize the volatility of returns. The regulations further provide that this requirement that plan assets be diversified so as to minimize the volatility of returns does not require greater diversification than is required under section 404(a)(1)(C) of Title I of the Employee Retirement Income Security Act of 1974, Public Law 93–406 (88 Stat. 829 (1974)) with respect to defined benefit pension plans. Furthermore, the regulations provide that the rate of return on the annuity contract for the employee issued by an insurance company licensed under the laws of a State is not in excess of a market rate of return, subject to an anti-abuse rule. The 2010 proposed regulations provide that certain additional interest crediting rates satisfy the market rate of return limitation.

The regulations reflect the preservation of capital rule in section 411(b)(5)(B)(i)(II) that requires a statutory hybrid plan to provide that interest credits will not result in a hypothetical account balance (or similar amount) being less than the aggregate amount of the hypothetical allocations. Under the 2007 proposed regulations, this requirement applied at the participant's annuity starting date. In addition, the 2007 proposed regulations provided that the combination of this preservation of capital protection with a rate of return that otherwise satisfies the market rate of return limitation will not result in an effective interest crediting rate that is in excess of a market rate of return. Responses to these rules were favorable and they are retained in these regulations. Hypothetical allocations are referred to as principal credits in the regulations, as described earlier in this preamble. The regulations clarify that the preservation of capital requirement applies to all principal credits that were credited under the plan as of the annuity starting date, including principal credits that were credited before the statutory effective date of the preservation of capital requirement under section 411(b)(5)(b)(i)(II).

These regulations do not address section 411(b)(5)(B)(vi), which requires that a plan's provisions reflect special rules applicable upon plan termination. These plan termination rules are addressed in the 2010 proposed regulations.

Section 123 of WRERA '08 amended ADEA to provide that, in the case of a governmental plan that is described in the first sentence of section 414(d) of the Code,[5] a rate of return or a method of crediting interest established pursuant to any provision of Federal, State, or local law is treated as a market rate of return for certain purposes under ADEA as long as such rate or method does not violate any other requirement of ADEA. No changes have been made to these regulations as a result of section 123 of WRERA '08 because that provision does not amend the Internal Revenue Code.

III. Section 411(d)(6): Changes in a Plan's Interest Crediting Rate

The 2007 proposed regulations provided that, to the extent that benefits have accrued under the terms of a statutory hybrid plan that entitle the participant to future interest credits, an amendment to the plan to change the interest crediting rate for such interest credits violates section 411(d)(6) if the revised rate under any circumstances

[5] A governmental plan in the first sentence of section 414(d) means a plan that is established and maintained for its employees by the Government of the United States, by the government of any State or political subdivision thereof, or by an agency or instrumentality of any of the foregoing.

could result in a lower interest crediting rate as of any date after the applicable amendment date of the amendment changing the interest crediting rate. Several commenters on the 2007 proposed regulations requested clarification of this rule. In particular, one commenter noted that there are several circumstances in which an amendment that results in a lower interest credit for a particular period after amendment than would have been provided for the same period under the old rate may not result in a reduction under section 411(d)(6), such as where the plan's aggregate interest credits after the applicable amendment date but before the period at issue exceeded the interest credits that would have been provided under the old rate or where the plan was also amended to increase benefits under other provisions, such as providing for larger principal credits than were provided before the change in interest crediting rates.

In response to these comments, the regulations clarify that the right to interest credits in the future that are not conditioned on future service constitutes a section 411(d)(6) protected benefit. Thus, to the extent that benefits have accrued under the terms of a statutory hybrid plan that entitle the participant to future interest credits, an amendment to the plan to change the interest crediting rate must comply with section 411(d)(6) if the revised rate under any circumstances could result in interest credits that are smaller as of any date after the applicable amendment date of the plan amendment than the interest credits that would have been provided without regard to the amendment.

The regulations retain the rule in the 2007 proposed regulations under which a plan is not treated as providing smaller interest credits in the future for purposes of section 411(d)(6) merely because of an amendment that changes the plan's interest crediting rate with respect to future interest credits from one of the safe harbor market rates of interest (for example, a rate based on an eligible cost-of-living index or a rate based on Treasury bonds with the margins specified in the regulations) to the rate of interest on long-term investment grade corporate bonds (the third segment rate under section 417(e) or 430(h)), if certain requirements are satisfied. Under this rule, the change in the interest crediting rates would not result in a reduction in accrued benefits in violation of section 411(d)(6) because it is expected that an interest crediting rate that equals the third segment rate would not provide smaller interest credits as of any date after the applicable amendment date than the prior safe harbor interest crediting rate, except in rare and unusual circumstances. This special rule is only available if the change applies to interest credits to be credited after the effective date of the amendment, the effective date of the amendment is at least 30 days after adoption and, on the effective date of the amendment, the new interest crediting rate is not lower than the interest crediting rate that would have applied in the absence of the amendment.

The 2010 proposed regulations provide additional guidance with respect to the market rate of return requirements where a plan is amended to change its interest crediting rate in the absence of the application of a special rule under section 411(d)(6). In such a case, in order to satisfy section 411(d)(6), a participant's benefit can never be less than the pre-amendment benefit increased for periods after the amendment using the pre-amendment interest crediting rate, thereby effectively requiring a minimum interest crediting rate.

Effective/Applicability Dates

The regulations reflect the statutory effective dates set forth in section 701(e) of PPA '06. Pursuant to section 701(e)(1) of PPA '06, the amendments made by section 701 of PPA '06 are generally effective for periods beginning on or after June 29, 2005. However, sections 701(e)(2) through 701(e)(6) of PPA '06, as amended by WRERA '08, set forth a number of special effective/applicability date rules that are described earlier in the Background section of the preamble of these regulations.

In addition, these regulations reflect the delayed effective date for collectively bargained plans as set forth in section 701(e)(4) of PPA '06. This rule delays the effective date for section 411(b)(5)(B)(i) with respect to a collectively bargained plan maintained pursuant to one or more collective bargaining agreements between employee representatives and one or more employers ratified on or before August 17, 2006.

The 2007 proposed regulations included a rule for determining whether a plan was collectively bargained if a collective bargaining agreement applies to some, but not all, of the plan participants. Under that rule, a plan would be considered a collectively bargained plan if at least 25 percent of the participants in the plan are members of collective bargaining units for which the benefit levels under the plan are specified under the collective bargaining agreement. The same proposed rule was included in proposed regulations under section 436 (REG–113891–07, 72 FR 50544) and, in response to comments, this rule was modified in final regulations under section 436 (TD 9467, 74 FR 53004). Rather than repeat the rule, these regulations incorporate by reference the rule under the final section 436 regulations.

These regulations generally apply to plan years that begin on or after January 1, 2011. However, § 1.411(b)(5)–1(d)(1)(iii), (d)(1)(vi), and (d)(6)(i), which provide that the regulations set forth the exclusive list of interest crediting rates and combinations of interest crediting rates that satisfy the market rate of return requirement under section 411(b)(5), apply to plan years that begin on or after January 1, 2012. For plan years that begin before January 1, 2012, statutory hybrid plans may utilize a rate that is permissible under these final regulations or the 2010 proposed regulations for purposes of satisfying the statutory market rate of return requirement. In addition, certain paragraphs which are reserved in these regulations (at § 1.411(a)(13)–1(b)(2), (b)(3), and (b)(4) and § 1.411(b)(5)–1(c)(3)(iii), (d)(1)(iv)(D), (d)(2)(ii), (d)(4)(iv), (d)(5)(iv), (d)(6)(ii), (d)(6)(iii), (e)(2), (e)(3)(iii), and (e)(4)) are addressed in proposed regulations that are being published at the same time as these regulations and those paragraphs are proposed to apply to plan years that begin on or after January 1, 2012.

The regulations provide that a benefit formula is not treated as having an effect similar to a lump sum-based benefit formula with respect to a participant who does not have an hour of service after the regulatory effective date. In addition, the regulations provide that, with respect to a conversion amendment, where the effective date of the conversion amendment (as defined in the regulations) is on or after the statutory effective date, the conversion protection requirements in the regulations apply only to a participant who has an hour of service on or after the regulatory effective date. As a result, participants who have an hour of service on or after the regulatory effective date must be provided with the minimum benefit required under the regulations beginning as of the effective date of a conversion amendment (as defined in the regulations), even if the effective date of the conversion amendment is before the regulatory effective date.

For periods after the statutory effective date and before the regulatory effective date, the relief of sections 411(a)(13) and 411(b)(5) applies and the

requirements of sections 411(a)(13) and 411(b)(5) must be satisfied. During the periods set forth in the preceding sentence, a plan is permitted to rely on the provisions of these regulations for purposes of applying the relief and satisfying the requirements of sections 411(a)(13) and 411(b)(5). Further, for periods after the statutory effective date and before the regulatory effective date, a plan is permitted to rely on the provisions of the 2010 proposed regulations, the 2007 proposed regulations, and Notice 2007–6 for purposes of applying the relief and satisfying the requirements of sections 411(a)(13) and 411(b)(5).

These regulations should not be construed to create any inference concerning the applicable law prior to the effective dates of sections 411(a)(13) and 411(b)(5). See also section 701(d) of PPA '06. In addition, these regulations should not be construed to create any inference concerning sections 411(a)(13) and 411(b)(5) prior to the effective date of the regulations.

Special Analyses

It has been determined that these regulations are not a significant regulatory action as defined in Executive Order 12866. Therefore, a regulatory assessment is not required. It also has been determined that section 553(b) of the Administrative Procedure Act (5 U.S.C. chapter 5) does not apply to these final regulations and, because the regulation does not impose a collection of information on small entities, the Regulatory Flexibility Act (5 U.S.C. chapter 6) does not apply. Pursuant to section 7805(f) of the Code, the proposed regulations preceding these final regulations were submitted to the Chief Counsel for Advocacy of the Small Business Administration for comment on its impact on small business.

Drafting Information

The principal authors of these regulations are Neil S. Sandhu, Lauson C. Green, and Linda S. F. Marshall, Office of Division Counsel/Associate Chief Counsel (Tax Exempt and Government Entities). However, other personnel from the IRS and the Treasury Department participated in the development of these regulations.

List of Subjects in 26 CFR Part 1

Income taxes, Reporting and recordkeeping requirements.

Adoption of Amendments to the Regulations

■ Accordingly, 26 CFR part 1 is amended as follows:

PART 1—INCOME TAXES

■ **Paragraph 1.** The authority citation for part 1 is amended by adding the following entries:

Authority: 26 U.S.C. 7805 * * *.

Section 1.411(a)(13)–1 also issued under 26 U.S.C. 411(a)(13).

Section 1.411(b)(5)–1 also issued under 26 U.S.C. 411(b)(5).

* * * * *

■ **Par. 2.** Section 1.411(a)(13)–1 is added to read as follows:

§ 1.411(a)(13)–1 Statutory hybrid plans.

(a) *In general.* This section sets forth certain rules that apply to statutory hybrid plans under section 411(a)(13). Paragraph (b) of this section describes special rules for certain statutory hybrid plans that determine benefits under a lump sum-based benefit formula. Paragraph (c) of this section describes the vesting requirement for statutory hybrid plans. Paragraphs (d) and (e) of this section contain definitions and effective/applicability dates, respectively.

(b) *Calculation of benefit by reference to hypothetical account balance or accumulated percentage*—(1) *Payment of a current balance or current value under a lump sum-based benefit formula.* Pursuant to section 411(a)(13)(A), a statutory hybrid plan that determines any portion of a participant's benefits under a lump sum-based benefit formula is not treated as failing to meet the following requirements solely because, with respect to benefits determined under that formula, the present value of those benefits is, under the terms of the plan, equal to the then-current balance of the hypothetical account maintained for the participant or to the then-current value of the accumulated percentage of the participant's final average compensation under that formula—

(i) Section 411(a)(2); or

(ii) With respect to the participant's accrued benefit derived from employer contributions, section 411(a)(11), 411(c), or 417(e).

(2) *Requirements that lump sum-based benefit formula must satisfy to obtain relief.* [Reserved].

(3) *Alternative forms of distribution under a lump sum-based benefit formula.* [Reserved].

(4) *Rules of application.* [Reserved].

(c) *Three-year vesting requirement*—(1) *In general.* Pursuant to section 411(a)(13)(B), if any portion of the participant's accrued benefit under a defined benefit plan is determined under a statutory hybrid benefit formula, the plan is treated as failing to satisfy the requirements of section 411(a)(2) unless the plan provides that the participant has a nonforfeitable right to 100 percent of the participant's accrued benefit if the participant has three or more years of service. Thus, this 3-year vesting requirement applies with respect to the entire accrued benefit of a participant under a defined benefit plan even if only a portion of the participant's accrued benefit under the plan is determined under a statutory hybrid benefit formula. Similarly, if the participant's accrued benefit under a defined benefit plan is, under the plan's terms, the larger of two (or more) benefit amounts, where each amount is determined under a different benefit formula (including a benefit determined pursuant to an offset among formulas within the plan or a benefit determined as the greater of a protected benefit under section 411(d)(6) and another benefit amount) and at least one of those formulas is a statutory hybrid benefit formula, the participant's entire accrued benefit under the defined benefit plan is subject to the 3-year vesting rule of section 411(a)(13)(B) and this paragraph (c). The rule described in the preceding sentence applies even if the larger benefit is ultimately the benefit determined under a formula that is not a statutory hybrid benefit formula.

(2) *Examples.* The provisions of this paragraph (c) are illustrated by the following examples:

Example 1. Employer M sponsors Plan X, a defined benefit plan under which each participant's accrued benefit is equal to the sum of the benefit provided under two benefit formulas. The first benefit formula is a statutory hybrid benefit formula, and the second formula is not. Because a portion of each participant's accrued benefit provided under Plan X is determined under a statutory hybrid benefit formula, the 3-year vesting requirement described in paragraph (c)(1) of this section applies to each participant's entire accrued benefit provided under Plan X.

Example 2. The facts are the same as in *Example 1,* except that the benefit formulas described in *Example 1* only apply to participants for service performed in Division A of Employer M and a different benefit formula applies to participants for service performed in Division B of Employer M. Pursuant to the terms of Plan X, the accrued benefit of a participant attributable to service performed in Division B is based on a benefit formula that is not a statutory hybrid benefit formula. Therefore, the 3-year vesting requirement described in paragraph (c)(1) of this section does not apply to a participant with an accrued benefit under Plan X if the participant's benefit is solely attributable to service performed in Division B.

Example 3. Employer N sponsors defined benefit Plan Y, an independent plan that provides benefits based solely on a lump sum-based benefit formula, and defined

benefit Plan Z, which provides benefits based on a formula which is not a statutory hybrid benefit formula, but which is a floor plan that provides for the benefits payable to a participant under Plan Z to be reduced by the amount of the vested accrued benefit payable under Plan Y. The formula under Plan Y is a statutory hybrid benefit formula. Accordingly, Plan Y is subject to the 3-year vesting requirement described in paragraph (c)(1) of this section. The formula provided under Plan Z, even taking into account the offset for vested accrued benefits under Plan Y, is not a statutory hybrid benefit formula. Therefore, Plan Z is not subject to the 3-year vesting requirement in paragraph (c)(1) of this section.

(d) *Definitions*—(1) *In general.* The definitions in this paragraph (d) apply for purposes of this section.

(2) *Accumulated benefit.* A participant's accumulated benefit at any date means the participant's benefit, as expressed under the terms of the plan, accrued to that date. For this purpose, if a participant's benefit is expressed under the terms of the plan as the current balance of a hypothetical account or the current value of an accumulated percentage of the participant's final average compensation, the participant's accumulated benefit is expressed in that manner regardless of how the plan defines the participant's accrued benefit. Thus, for example, the accumulated benefit of a participant may be expressed under the terms of the plan as either the current balance of a hypothetical account or the current value of an accumulated percentage of the participant's final average compensation, even if the plan defines the participant's accrued benefit as an annuity beginning at normal retirement age that is actuarially equivalent to that balance or value.

(3) *Lump sum-based benefit formula*—(i) *In general.* A lump sum-based benefit formula means a benefit formula used to determine all or any part of a participant's accumulated benefit under a defined benefit plan under which the accumulated benefit provided under the formula is expressed as the current balance of a hypothetical account maintained for the participant or as the current value of an accumulated percentage of the participant's final average compensation. A benefit formula is expressed as the current balance of a hypothetical account maintained for the participant if it is expressed as a current single-sum dollar amount. Whether a benefit formula is a lump sum-based benefit formula is determined based on how the accumulated benefit of a participant is expressed under the terms of the plan, and does not depend on whether the plan provides an optional form of benefit in the form of a single-sum payment.

(ii) *Exception for employee contributions.* For purposes of the definition of a lump sum-based benefit formula in paragraph (d)(3)(i) of this section, the benefit properly attributable to after-tax employee contributions, rollover contributions from eligible retirement plans under section 402(c)(8), and other similar employee contributions (such as repayments of distributions pursuant to section 411(a)(7)(C) and employee contributions that are pickup contributions pursuant to section 414(h)(2)) is disregarded. However, a benefit is not properly attributable to contributions described in this paragraph (d)(3)(ii) if the contributions are credited with interest at a rate that exceeds a reasonable rate of interest or if the conversion factors used to calculate such benefit are not actuarially reasonable. See section 411(c) for an example of a calculation of a benefit that is properly attributable to employee contributions.

(4) *Statutory hybrid benefit formula*—(i) *In general.* A statutory hybrid benefit formula means a benefit formula that is either a lump sum-based benefit formula or a formula that is not a lump sum-based benefit formula but that has an effect similar to a lump sum-based benefit formula.

(ii) *Effect similar to a lump sum-based benefit formula*—(A) *In general.* Except as provided in paragraphs (d)(4)(ii)(B) through (D) of this section, a benefit formula under a defined benefit plan that is not a lump sum-based benefit formula has an effect similar to a lump sum-based benefit formula if the formula provides that a participant's accumulated benefit is expressed as a benefit that includes the right to adjustments (including a formula that provides for indexed benefits under § 1.411(b)(5)–1(b)(2)) for a future period and the total dollar amount of those adjustments is reasonably expected to be smaller for the participant than for a similarly situated, younger individual (within the meaning of § 1.411(b)(5)–1(b)(5)) who is or could be a participant in the plan. A benefit formula that does not include adjustments for any future period is treated as a formula with an effect similar to a lump sum-based benefit formula if the formula would be described in the preceding sentence except for the fact that the adjustments are provided pursuant to a pattern of repeated plan amendments. *See* § 1.411(d)–4, A–1(c)(1).

(B) *Exception for post-retirement benefit adjustments.* Post-annuity starting date adjustments in the amount payable to a participant (such as cost-of-living increases) are disregarded in determining whether a benefit formula under a defined benefit plan has an effect similar to a lump sum-based benefit formula.

(C) *Exception for certain variable annuity benefit formulas.* If the assumed interest rate used for purposes of the adjustment of amounts payable to a participant under a variable annuity benefit formula is 5 percent or higher, then the variable annuity benefit formula is not treated as being reasonably expected to provide a smaller total dollar amount of future adjustments for the participant than for a similarly situated, younger individual who is or could be a participant in the plan, and thus such a variable annuity benefit formula does not have an effect similar to a lump sum-based benefit formula.

(D) *Exception for employee contributions.* Benefits that are disregarded under paragraph (d)(3)(ii) of this section (benefits properly attributable to certain employee contributions) are also disregarded for purposes of determining whether a benefit formula has an effect similar to a lump sum-based benefit formula.

(5) *Statutory hybrid plan.* A statutory hybrid plan means a defined benefit plan that contains a statutory hybrid benefit formula.

(6) *Variable annuity benefit formula.* A variable annuity benefit formula means any benefit formula under a defined benefit plan which provides that the amount payable is periodically adjusted by reference to the difference between the rate of return on plan assets (or specified market indices) and a specified assumed interest rate.

(e) *Effective/applicability date*—(1) *Statutory effective/applicability date*—(i) *In general.* Except as provided in paragraphs (e)(1)(ii) and (e)(1)(iii) of this section, section 411(a)(13) applies for periods beginning on or after June 29, 2005.

(ii) *Calculation of benefits.* Section 411(a)(13)(A) applies to distributions made after August 17, 2006.

(iii) *Vesting*—(A) *Plans in existence on June 29, 2005*—(*1*) *General rule.* In the case of a plan that is in existence on June 29, 2005 (regardless of whether the plan is a statutory hybrid plan on that date), section 411(a)(13)(B) applies to plan years that begin on or after January 1, 2008.

(*2*) *Exception for plan sponsor election. See* § 1.411(b)(5)–1(f)(1)(iii)(A)(*2*) for a special election for early application of section 411(a)(13)(B).

(B) *Plans not in existence on June 29, 2005.* In the case of a plan not in existence on June 29, 2005, section 411(a)(13)(B) applies to plan years that end on or after June 29, 2005.

(C) *Collectively bargained plans.* Notwithstanding paragraphs (e)(1)(iii)(A) and (B) of this section, in the case of a collectively bargained plan maintained pursuant to one or more collective bargaining agreements between employee representatives and one or more employers ratified on or before August 17, 2006, the requirements of section 411(a)(13)(B) do not apply to plan years that begin before the earlier of—

(*1*) The later of—

(*i*) The date on which the last of those collective bargaining agreements terminates (determined without regard to any extension thereof on or after August 17, 2006); or

(*ii*) January 1, 2008; or

(*2*) January 1, 2010.

(D) *Treatment of plans with both collectively bargained and non-collectively bargained employees.* In the case of a plan with respect to which a collective bargaining agreement applies to some, but not all, of the plan participants, the plan is considered a collectively bargained plan for purposes of paragraph (e)(1)(iii)(C) of this section if it is considered a collectively bargained plan under the rules of § 1.436–1(a)(5)(ii)(B).

(E) *Hour of service required.* Section 411(a)(13)(B) does not apply to a participant who does not have an hour of service after section 411(a)(13)(B) but would otherwise apply to the participant under the rules of paragraph (e)(1)(iii)(A), (B), or (C) of this section.

(2) *Effective/applicability date of regulations*—(i) *In general.* Except as provided in paragraph (e)(2)(ii) of this section, this section applies to plan years that begin on or after January 1, 2011. For the periods after the statutory effective date set forth in paragraph (e)(1) of this section and before the regulatory effective date set forth in the preceding sentence, the relief of section 411(a)(13)(A) applies and the 3-year vesting requirement of section 411(a)(13)(B) must be satisfied. During these periods, a plan is permitted to rely on the provisions of this section for purposes of applying the relief of section 411(a)(13)(A) and satisfying the requirements of section 411(a)(13)(B).

(ii) *Special effective date.* [Reserved].

(iii) *Hour of service required.* A benefit formula is not treated as having an effect similar to a lump sum-based benefit formula under paragraph (d)(4)(ii) of this section with respect to a participant who does not have an hour of service after the regulatory effective date set forth in paragraph (e)(2)(i) of this section.

■ **Par. 3.** Section 1.411(b)(5)–1 is added to read as follows:

§ 1.411(b)(5)–1 Reduction in rate of benefit accrual under a defined benefit plan.

(a) *In general*—(1) *Organization of regulation.* This section sets forth certain rules for determining whether a reduction occurs in the rate of benefit accrual under a defined benefit plan because of the attainment of any age for purposes of section 411(b)(1)(H)(i). Paragraph (b) of this section describes safe harbors for certain plan designs (including statutory hybrid plans) that are deemed to satisfy the age discrimination rules under section 411(b)(1)(H). Paragraph (c) of this section describes rules relating to statutory hybrid plan conversion amendments. Paragraph (d) of this section describes rules restricting interest credits (or equivalent amounts) under a statutory hybrid plan to a market rate of return. Paragraph (e) of this section contains additional rules related to market rates of return. Paragraph (f) of this section contains effective/applicability dates.

(2) *Definitions.* The definitions of accumulated benefit, lump sum-based benefit formula, statutory hybrid benefit formula, statutory hybrid plan, and variable annuity benefit formula in § 1.411(a)(13)–1(d) apply for purposes of this section.

(b) *Safe harbors for certain plan designs*—(1) *Accumulated benefit testing*—(i) *In general.* Pursuant to section 411(b)(5)(A), and subject to paragraph (b)(1)(ii) of this section, a plan is not treated as failing to meet the requirements of section 411(b)(1)(H)(i) with respect to an individual who is or could be a participant if, as of any date, the accumulated benefit of the individual would not be less than the accumulated benefit of any similarly situated, younger individual who is or could be a participant. Thus, this test involves a comparison of the accumulated benefit of an individual who is or could be a participant in the plan with the accumulated benefit of each similarly situated, younger individual who is or could be a participant in the plan. See paragraph (b)(5) of this section for rules regarding whether a younger individual who is or could be a participant is similarly situated to a participant. The comparison described in this paragraph (b)(1)(i) is based on any one of the following benefit measures, each of which is referred to as a *safe-harbor formula measure:*

(A) The annuity payable at normal retirement age (or current age, if later) if the accumulated benefit of the participant under the terms of the plan is an annuity payable at normal retirement age (or current age, if later).

(B) The current balance of a hypothetical account maintained for the participant if the accumulated benefit of the participant under the terms of the plan is a balance of a hypothetical account.

(C) The current value of an accumulated percentage of the participant's final average compensation if the accumulated benefit of the participant under the terms of the plan is an accumulated percentage of final average compensation.

(ii) *Benefit formulas for comparison*—(A) *In general.* Except as provided in paragraphs (b)(1)(ii)(B), (C), and (D) of this section, the safe harbor provided by section 411(b)(5)(A) and paragraph (b)(1)(i) of this section is available only with respect to an individual if the individual's accumulated benefit under the plan is expressed in terms of only one safe-harbor formula measure and no similarly situated, younger individual who is or could be a participant has an accumulated benefit that is expressed in terms of any measure other than that same safe-harbor formula measure. Thus, for example, if a plan provides that the accumulated benefit of participants who are age 55 or over is expressed under the terms of the plan as a life annuity payable at normal retirement age (or current age if later) as described in paragraph (b)(1)(i)(A) of this section and the plan provides that the accumulated benefit of participants who are younger than age 55 is expressed as the current balance of a hypothetical account as described in paragraph (b)(1)(i)(B) of this section, then the safe harbor described in section 411(b)(5)(A) and paragraph (b)(1)(i) of this section does not apply to individuals who are or could be participants who are age 55 or over.

(B) *Sum-of benefit formulas.* If a plan provides that a participant's accumulated benefit is expressed as the sum of benefits determined in terms of two or more benefit formulas, each of which is expressed in terms of a different safe-harbor formula measure, then the plan is deemed to satisfy paragraph (b)(1)(i) of this section with respect to an individual who is or could be a participant, provided that the plan satisfies the comparison described in paragraph (b)(1)(i) of this section separately for benefits determined in terms of each safe-harbor formula measure and no accumulated benefit of a similarly situated, younger individual

who is or could be a participant is expressed other than as—

(*1*) The sum of benefits under two or more benefit formulas, each of which is expressed in terms of one of those same safe-harbor formula measures as is used for the participant's "sum-of" benefit;

(*2*) The greater of benefits under two or more benefit formulas, each of which is expressed in terms of any one of those same safe-harbor formula measures;

(*3*) The choice of benefits under two or more benefit formulas, each of which is expressed in terms of any one of those same safe-harbor formula measures; or

(*4*) A benefit that is determined in terms of only one of those same safe-harbor formula measures.

(C) *Greater-of benefit formulas.* If a plan provides that a participant's accumulated benefit is expressed as the greater of benefits under two or more benefit formulas, each of which is determined in terms of a different safe-harbor formula measure, then the plan is deemed to satisfy paragraph (b)(1)(i) of this section with respect to an individual who is or could be a participant, provided that the plan satisfies the comparison described in paragraph (b)(1)(i) of this section separately for benefits determined in terms of each safe-harbor formula measure and no accumulated benefit of a similarly situated, younger individual who is or could be a participant is expressed other than as—

(*1*) The greater of benefits determined under two or more benefit formulas, each of which is expressed in terms of one of those same safe-harbor formula measures as is used for the participant's "greater-of" benefit;

(*2*) The choice of benefits determined under two or more benefit formulas, each of which is expressed in terms of one of those same safe-harbor formula measures; or

(*3*) A benefit that is determined in terms of only one of those same safe-harbor formula measures.

(D) *Choice-of benefit formulas.* If a plan provides that a participant's accumulated benefit is determined pursuant to a choice by the participant between benefits determined in terms of two or more different safe-harbor formula measures, then the plan is deemed to satisfy paragraph (b)(1)(i) of this section with respect to an individual who is or could be a participant, provided that the plan satisfies the comparison described in paragraph (b)(1)(i) of this section separately for benefits determined in terms of each safe-harbor formula measure and no accumulated benefit of a similarly situated, younger individual who is or could be a participant is expressed other than as—

(*1*) The choice of benefits determined under two or more benefit formulas, each of which is expressed in terms of one of those same safe-harbor formula measures as is used for the participant's "choice-of" benefit; or

(*2*) A benefit that is determined in terms of only one of those same safe-harbor formula measures.

(iii) *Disregard of certain subsidized benefits.* For purposes of paragraph (b)(1)(i) of this section, any subsidized portion of any early retirement benefit that is included in a participant's accumulated benefit is disregarded. For this purpose, the subsidized portion of an early retirement benefit is the retirement-type subsidy within the meaning of § 1.411(d)–3(g)(6) that is contingent on a participant's severance from employment and commencement of benefits before normal retirement age.

(iv) *Examples.* The provisions of this paragraph (b)(1) are illustrated by the following examples:

Example 1. (i) *Facts relating to formulas described in paragraph (b)(1)(i)(A) of this section.* Employer X maintains a defined benefit plan that provides a straight life annuity payable commencing at normal retirement age (which is age 65) equal to 1 percent of the participant's highest 3 consecutive years' compensation times years of service and provides for suspension of benefits as permitted under section 411(a)(3)(B). In the case of a participant whose service continues after normal retirement age, the amount payable is the greater of (i) the benefit payable at normal retirement age, and for each year thereafter, actuarially increased to account for delayed commencement, and (ii) the retirement benefit determined under the formula at the date the employee's service ceases (calculated by including years of service and increases in compensation after normal retirement age).

(ii) *Conclusion.* Under these facts, the plan formula is a formula described in paragraph (b)(1)(i)(A) of this section. The formula is not a statutory hybrid benefit formula merely because the plan formula includes a benefit that is based on the participant's benefit at normal retirement age (and each year thereafter) that is actuarially increased for commencement after attainment of normal retirement age. In addition, the plan formula would satisfy the comparison under paragraph (b)(1)(i) of this section for each individual who is or could be a participant because, as of any date (including any date after normal retirement age), the accumulated benefit of the individual would not be less than the accumulated benefit of any similarly situated, younger individual who is or could be a participant.

Example 2. (i) *Facts relating to formulas described in paragraph (b)(1)(i)(B) of this section.* Employer Y maintains a defined benefit plan that expresses each participant's accumulated benefit as the balance of a hypothetical account. Under the formula, the hypothetical account balance of each participant is credited monthly with interest at a specified rate and the hypothetical account balance of each employee who is a participant is also credited with a pay credit under the plan equal to 7 percent of the participant's compensation for the month.

(ii) *Conclusion.* The plan formula is a lump sum-based benefit formula described in paragraph (b)(1)(i)(B) of this section and the formula would satisfy the comparison under paragraph (b)(1)(i) of this section for each individual who is or could be a participant because, as of any date, the hypothetical account balance of the individual would not be less than the hypothetical account balance of any similarly situated, younger individual who is or could be a participant.

Example 3. (i) *Facts where plan suspends interest credits after normal retirement age.* The facts are the same as in *Example 2* except that the plan provides for suspension of benefits as permitted under section 411(a)(3)(B). Pursuant to the plan's suspension of benefits provision, the plan provides for interest credits to cease during service after normal retirement age or for the amount of the interest credits during this service to be reduced to reflect principal credits credited.

(ii) *Conclusion.* The plan does not satisfy the safe harbor in paragraph (b)(1)(i) of this section. Applying the rule of paragraph (b)(1)(i) of this section, the plan formula would fail to satisfy the safe harbor comparison under paragraph (b)(1)(i) of this section with respect to an individual whose benefits have been suspended because, as of any date after attainment of normal retirement age, the hypothetical account balance of this individual would be less than the hypothetical account balance of one or more similarly situated individuals who have not attained normal retirement age.

Example 4. (i) *Facts providing greater-of benefits as described in paragraph (b)(1)(ii)(C) of this section.* Employer Z sponsors a defined benefit plan that provides an accumulated benefit expressed as a straight life annuity commencing at the plan's normal retirement age (age 65), based on a percentage of average annual compensation times the participant's years of service. On November 2, 2011, the plan is amended effective as of January 1, 2012, to provide participants who have attained age 55 by January 1, 2012, with a benefit that is the greater of the benefit under the average annual compensation formula and a benefit that is based on the balance of a hypothetical account, which provides for annual pay credits of a specified percentage of the participant's compensation and annual interest credits based on the third segment rate.

(ii) *Conclusion where plan provides greater-of benefits to older participants.* The plan satisfies the safe harbor of paragraph (b)(1)(i) of this section with respect to all individuals who are or could be participants. Pursuant to the rules of paragraph (b)(1)(ii)(C) of this section, the plan satisfies the safe harbor with respect to individuals who have attained age 55 by January 1, 2012, because (A) with respect to the benefit described in

paragraph (b)(1)(i)(A) of this section (the benefit based on average annual compensation, disregarding the benefit based on the balance of a hypothetical account), the accumulated benefit for any individual who is or could be a participant and who is at least age 55 on January 1, 2012, would in no event be less than the accumulated benefit for a similarly situated, younger individual who is or could be participant and who has not yet attained age 55 by January 1, 2012, (B) with respect to the benefit described in paragraph (b)(1)(i)(B) of this section (the benefit based on the balance of a hypothetical account, disregarding the benefit based on average annual compensation), the accumulated benefit for any individual who is or could be a participant and who is at least age 55 on January 1, 2012, would in no event be less than the accumulated benefit for a similarly situated, younger individual who is or could be a participant and who has not yet attained age 55 by January 1, 2012, and (C) the benefit of any individual who is or could be a participant who has not yet attained age 55 by January 1, 2012, is only expressed as an annuity payable at normal retirement age as described in paragraph (b)(1)(i)(A) of this section, and this safe-harbor formula measure applies also to participants who have attained age 55 by January 1, 2012. Furthermore, the plan satisfies the safe harbor with respect to individuals who have not yet attained age 55 by January 1, 2012, because the benefit of these individuals satisfies the general rule of paragraph (b)(1)(ii)(A) of this section.

(iii) *Conclusion where plan provides greater-of benefits only to younger participants.* If, instead of the facts in paragraph (i) of this *Example 4,* the plan had been amended to provide only participants who have not yet attained age 55 by January 1, 2012, with a benefit that is the greater of the benefit under the average annual compensation formula and a benefit that is based on the balance of a hypothetical account then, the safe harbor would not be satisfied with respect to individuals who have attained age 55 by January 1, 2012. Under paragraph (b)(1)(ii)(A) of this section, except as provided in paragraphs (b)(1)(ii)(B), (C), and (D) of this section, the safe harbor of paragraph (b)(1)(i) of this section is available only with respect to individuals over age 55, whose benefit is expressed in terms of only one safe-harbor formula measure, if no similarly situated, younger individual has an accumulated benefit that is expressed in terms of any measure other than that same safe-harbor formula measure. This is not the case under these facts. The greater-of rule of paragraph (b)(1)(ii)(C) of this section would not apply to individuals who have attained age 55 because the accumulated benefits of these individuals is not equal to the greater of benefits under two or more benefit formulas.

Example 5. (i) *Facts where plan provides choice-of benefits to older participants.* The facts are the same as in paragraph (i) of *Example 4,* except that for service after December 31, 2011, the amendment permits participants who have attained age 55 by January 1, 2012, to choose between benefits under the average annual compensation benefit formula or benefits under the hypothetical account balance formula (but, if a participant chooses the hypothetical account balance formula, his or her benefit under the plan is in no event to be less than the benefit determined under the average annual compensation benefit formula for service before January 1, 2012), while other participants receive benefits solely under the hypothetical account balance formula (but individuals who are participants on December 31, 2011, are in no event to receive less than the benefit determined under the average annual compensation benefit formula for service before January 1, 2012).

(ii) *Conclusion where plan provides choice to older participants.* The plan satisfies the safe harbor with respect to all individuals who are or could be participants. Pursuant to the rule of paragraph (b)(1)(ii)(D) of this section, the plan satisfies the safe harbor of paragraph (b)(1)(i) of this section with respect to individuals who have attained age 55 by January 1, 2012, and, pursuant to the rule of paragraph (b)(1)(ii)(A), the plan satisfies the safe harbor with respect to individuals who have not yet attained 55 by January 1, 2012.

(iii) *Conclusion where plan provides choice-of benefits to older workers and greater-of benefits to younger participants.* If, in addition to the facts in paragraph (i) of this *Example 5,* the plan were also to provide participants who had not yet attained age 55 by January 1, 2012, the greater of the benefits under the average annual compensation benefit formula or the benefits under the hypothetical account balance formula, then pursuant to the rules of paragraph (b)(1)(ii)(A) and (D) of this section, the safe harbor would not be satisfied with respect to participants who have attained age 55 by January 1, 2012.

(2) *Indexed benefits*—(i) *In general.* Except as provided in paragraph (b)(2)(iii) of this section, pursuant to section 411(b)(5)(E) and this paragraph (b)(2)(i), a defined benefit plan is not treated as failing to meet the requirements of section 411(b)(1)(H) with respect to a participant solely because a benefit formula (other than a lump sum-based benefit formula) under the plan provides for the periodic adjustment of the participant's accrued benefit under the plan by means of the application of a recognized index or methodology. For purpose of the preceding sentence, a rate that does not exceed a market rate of return, as defined in paragraph (d) of this section, is deemed to be a recognized index or methodology. However, such a plan must satisfy the qualification requirements otherwise applicable to statutory hybrid plans, including the requirements of § 1.411(a)(13)–1(c) (relating to minimum vesting standards) and paragraph (c) of this section (relating to plan conversion amendments).

(ii) *Similarly situated participant test.* Paragraph (b)(2)(i) of this section does not apply unless the aggregate adjustments made to a participant's accrued benefit under the plan (determined as a percentage of the unadjusted accrued benefit) in a period would not be less than the aggregate adjustments for any similarly situated, younger participant. This test requires a comparison, for each period, of the aggregate adjustments for each individual who is or could be a participant in the plan for the period with the aggregate adjustments of each other similarly situated, younger individual who is or could be a participant in the plan for that period. See paragraph (b)(5) of this section for rules regarding whether each younger individual who is or could be a participant is similarly situated to a participant.

(iii) *Protection against loss*—(A) *In general.* Paragraph (b)(2)(i) of this section does not apply unless the plan satisfies section 411(b)(5)(E)(ii) and paragraph (d)(2) of this section (relating to preservation of capital).

(B) *Exception for variable annuity benefit formulas.* The requirement to satisfy section 411(b)(5)(B)(i)(II), as set forth in paragraph (d)(2) of this section, as well as section 411(b)(5)(E)(ii), as set forth in this paragraph (b)(2)(iii), does not apply in the case of a benefit provided under a variable annuity benefit formula as defined in § 1.411(a)(13)–1(d)(6).

(3) *Certain offsets permitted.* A plan is not treated as failing to meet the requirements of section 411(b)(1)(H) solely because the plan provides offsets against benefits under the plan to the extent the offsets are allowable in applying the requirements of section 401(a) and the applicable requirements of the Employee Retirement Income Security Act of 1974, Public Law 93–406 (88 Stat. 829 (1974)), and the Age Discrimination in Employment Act of 1967, Public Law 90–202 (81 Stat. 602 (1967)).

(4) *Permitted disparities in plan contributions or benefits.* A plan is not treated as failing to meet the requirements of section 411(b)(1)(H) solely because the plan provides a disparity in contributions or benefits with respect to which the requirements of section 401(l) are met.

(5) *Definition of similarly situated.* For purposes of paragraphs (b)(1) and (b)(2) of this section, an individual is similarly situated to another individual if the individual is identical to that other individual in every respect that is relevant in determining a participant's benefit under the plan (including period of service, compensation, position, date of hire, work history, and any other

respect) except for age. In determining whether an individual is similarly situated to another individual, any characteristic that is relevant for determining benefits under the plan and that is based directly or indirectly on age is disregarded. For example, if a particular benefit formula applies to a participant on account of the participant's age, an individual to whom the benefit formula does not apply and who is identical to the participant in all other respects is similarly situated to the participant. By contrast, an individual is not similarly situated to a participant if a different benefit formula applies to the individual and the application of the different formula is not based directly or indirectly on age.

(c) *Special rules for plan conversion amendments*—(1) *In general.* Pursuant to section 411(b)(5)(B)(ii), (iii), and (iv), if there is a conversion amendment within the meaning of paragraph (c)(4) of this section with respect to a defined benefit plan, then the plan is treated as failing to meet the requirements of section 411(b)(1)(H) unless the plan, after the amendment, satisfies the requirements of paragraph (c)(2) of this section.

(2) *Separate calculation of post-conversion benefit*—(i) *In general.* A statutory hybrid plan satisfies the requirements of this paragraph (c)(2) if the plan provides that, in the case of an individual who was a participant in the plan immediately before the date of adoption of the conversion amendment, the participant's benefit at any subsequent annuity starting date is not less than the sum of—

(A) The participant's section 411(d)(6) protected benefit (as defined in § 1.411(d)–3(g)(14)) with respect to service before the effective date of the conversion amendment, determined under the terms of the plan as in effect immediately before the effective date of the conversion amendment; and

(B) The participant's section 411(d)(6) protected benefit with respect to service on and after the effective date of the conversion amendment, determined under the terms of the plan as in effect after the effective date of the conversion amendment.

(ii) *Rules of application.* For purposes of this paragraph (c)(2), except as provided in paragraph (c)(3) of this section, the benefits under paragraphs (c)(2)(i)(A) and (c)(2)(i)(B) of this section must each be determined in the same manner as if they were provided under separate plans that are independent of each other (for example, without any benefit offsets), and, except to the extent permitted under § 1.411(d)–3 or § 1.411(d)–4 (or other applicable law), each optional form of payment provided under the terms of the plan with respect to a participant's section 411(d)(6) protected benefit as in effect before the conversion amendment must be available thereafter to the extent of the plan's benefits for service prior to the effective date of the conversion amendment.

(3) *Establishment of opening hypothetical account balance or opening accumulated percentage*—(i) *In general.* Provided that the requirements of paragraph (c)(3)(ii) or (c)(3)(iii) of this section are satisfied, a statutory hybrid plan under which an opening hypothetical account balance or opening accumulated percentage of the participant's final average compensation is established as of the effective date of the conversion amendment does not fail to satisfy the requirements of paragraph (c)(2) of this section merely because benefits attributable to that opening hypothetical account balance or opening accumulated percentage (that is, benefits that are not described in paragraph (c)(2)(i)(B) of this section) are substituted for benefits described in paragraph (c)(2)(i)(A) of this section.

(ii) *Comparison of benefits at annuity starting date*—(A) *Testing requirement.* The requirements of this paragraph (c)(3)(ii) are satisfied with respect to an optional form of benefit payable at an annuity starting date only if the plan provides that the amount of the benefit payable in that optional form under the lump sum-based benefit formula that is attributable to the opening hypothetical account balance or opening accumulated percentage as described in paragraph (c)(3)(i) of this section is not less than the benefit under the comparable optional form of benefit under paragraph (c)(2)(i)(A) of this section. To satisfy this requirement, if the benefit under the optional form attributable to the opening hypothetical account balance or opening accumulated percentage is less than the benefit under the comparable optional form of benefit described in paragraph (c)(2)(i)(A) of this section, then the benefit attributable to the opening hypothetical account balance or opening accumulated percentage must be increased to the extent necessary to provide the minimum benefit described in this paragraph (c)(3)(ii). Thus, if a plan is using the option under this paragraph (c)(3)(ii) to satisfy paragraph (c)(2) of this section with respect to a participant, the participant must receive a benefit equal to not less than the sum of—

(*1*) The benefit described in paragraph (c)(2)(i)(B) of this section; and

(*2*) The greater of—

(*i*) The benefit attributable to the opening hypothetical account balance or attributable to the opening accumulated percentage of the participant's final average compensation as described in this paragraph (c)(3)(ii); or

(*ii*) The benefit described in paragraph (c)(2)(i)(A) of this section.

(B) *Comparable optional form of benefit.* If there was an optional form of benefit within the same generalized optional form of benefit (within the meaning of § 1.411(d)–3(g)(8)) that would have been available to the participant at that annuity starting date under the terms of the plan as in effect immediately before the effective date of the conversion amendment, then that optional form of benefit is the comparable optional form of benefit.

(C) *Special rule for new post-conversion optional forms of benefit.* If an optional form of benefit is available on the annuity starting date with respect to the benefit attributable to the opening hypothetical account balance or opening accumulated percentage, but no optional form within the same generalized optional form of benefit (within the meaning of § 1.411(d)–3(g)(8)) was available at that annuity starting date under the terms of the plan as in effect immediately prior to the effective date of the conversion amendment, then, for purposes of this paragraph (c)(3)(ii), the plan is treated as if such an optional form of benefit were available immediately prior to the effective date of the conversion amendment for purposes of this paragraph (c)(3)(ii). Thus, for example, if a single-sum optional form of payment is not available under the plan terms applicable to the accrued benefit described in paragraph (c)(2)(i)(A) of this section, but a single-sum optional form of payment is available with respect to the benefit attributable to the opening hypothetical account balance or opening accumulated percentage as of the annuity starting date, then, for purposes of this paragraph (c)(3)(ii), the plan is treated as if a single sum (which satisfies the requirements of section 417(e)(3)) were available under the terms of the plan as in effect immediately prior to the effective date of the conversion amendment.

(iii) *Comparison of benefits at effective date of conversion amendment.* [Reserved].

(4) *Conversion amendment*—(i) *In general.* An amendment is a conversion amendment that is subject to the requirements of this paragraph (c) with respect to a participant if—

(A) The amendment reduces or eliminates the benefits that, but for the amendment, the participant would have

accrued after the effective date of the amendment under a benefit formula that is not a statutory hybrid benefit formula (and under which the participant was accruing benefits prior to the amendment); and

(B) After the effective date of the amendment, all or a portion of the participant's benefit accruals under the plan are determined under a statutory hybrid benefit formula.

(ii) *Rules of application*—(A) *In general.* Paragraphs (c)(4)(iii), (iv), and (v) of this section describe special rules that treat certain arrangements as conversion amendments. The rules described in those paragraphs apply both separately and in combination. Thus, for example, in an acquisition described in § 1.410(b)–2(f), if the buyer adopts an amendment under which a participant's benefits under the seller's plan that is not a statutory hybrid plan are coordinated with a separate plan of the buyer that is a statutory hybrid plan, such as through an offset of the participant's benefit under the buyer's plan by the participant's benefit under the seller's plan, the seller and buyer are treated as a single employer under paragraph (c)(4)(iv) of this section and they are treated as having adopted a conversion amendment under paragraph (c)(4)(iii) of this section. However, pursuant to paragraph (c)(4)(iii) of this section, if there is no coordination between the two plans, there is no conversion amendment.

(B) *Covered amendments.* Only amendments that eliminate or reduce accrued benefits described in section 411(a)(7), or a retirement-type subsidy described in section 411(d)(6)(B)(i), that would otherwise accrue as a result of future service are treated as amendments described in paragraph (c)(4)(i)(A) of this section.

(C) *Operation of plan terms treated as covered amendment.* If, under the terms of a plan, a change in the conditions of a participant's employment results in a reduction of the participant's benefits that would have accrued in the future under a benefit formula that is not a statutory hybrid benefit formula, the plan is treated for purposes of this paragraph (c)(4) as if such plan terms constitute an amendment that reduces the participant's benefits that would have accrued after the effective date of the change under a benefit formula that is not a statutory hybrid benefit formula. Thus, for example, if a participant transfers from an operating division that is covered by a non-statutory hybrid benefit formula to an operating division that is covered by a statutory hybrid benefit formula, there has been a conversion amendment and the effective date of the conversion amendment is the date of the transfer. For purposes of applying the effective date rule of paragraph (f)(1)(ii) of this section, the date that the relevant plan terms were adopted is treated as the adoption date of the amendment.

(iii) *Multiple plans.* An employer is treated as having adopted a conversion amendment if the employer adopts an amendment under which a participant's benefits under a plan that is not a statutory hybrid plan are coordinated with a separate plan that is a statutory hybrid plan, such as through a reduction (offset) of the benefit under the plan that is not a statutory hybrid plan.

(iv) *Multiple employers.* If the employer of an employee changes as a result of a transaction described in § 1.410(b)–2(f), then the two employers are treated as a single employer for purposes of this paragraph (c)(4).

(v) *Multiple amendments*—(A) *In general*—(*1*) *General rule.* For purposes of this paragraph (c)(4), a conversion amendment includes multiple amendments that result in a conversion amendment even if the amendments are not conversion amendments individually. For example, an employer is treated as having adopted a conversion amendment if the employer first adopts an amendment described in paragraph (c)(4)(i)(A) of this section and, at a later date, adopts an amendment that adds a benefit under a statutory hybrid benefit formula as described in paragraph (c)(4)(i)(B) of this section, if they are consolidated under paragraph (c)(4)(v)(A)(*2*) of this section.

(*2*) *Delay between plan amendments.* In determining whether a conversion amendment has been adopted, an amendment to provide a benefit under a statutory hybrid benefit formula is consolidated with a prior amendment to reduce non-statutory hybrid benefit formula benefits if the amendment providing benefits under a statutory hybrid benefit formula is adopted within three years after adoption of the amendment reducing non-statutory hybrid benefit formula benefits. Thus, the later adoption of the statutory hybrid benefit formula will cause the earlier amendment to be treated as part of a conversion amendment. In the case of an amendment to provide a benefit under a statutory hybrid benefit formula that is adopted more than three years after adoption of an amendment to reduce benefits under a non-statutory hybrid benefit formula, there is a presumption that the amendments are not consolidated unless the facts and circumstances indicate that adoption of the amendment to provide a benefit under a statutory hybrid benefit formula was intended at the time of reduction in the non-statutory hybrid benefit formula.

(B) *Multiple conversion amendments.* If an employer adopts multiple amendments reducing benefits described in paragraph (c)(4)(i)(A) of this section, each amendment is treated as a separate conversion amendment, provided that paragraph (c)(4)(i)(B) of this section is applicable at the time of the amendment (taking into account the rules of this paragraph (c)(4)).

(vi) *Effective date of a conversion amendment.* The effective date of a conversion amendment is, with respect to a participant, the date as of which the reduction of the participant's benefits described in paragraph (c)(4)(i)(A) of this section occurs. In accordance with section 411(d)(6), the date of a reduction of those benefits cannot be earlier than the date of adoption of the conversion amendment.

(5) *Examples.* The following examples illustrate the application of this paragraph (c):

Example 1. (i) *Facts where plan does not establish opening hypothetical account balance for participants and participant elects life annuity at normal retirement age.* Employer N sponsors Plan E, a defined benefit plan that provides an accumulated benefit, payable as a straight life annuity commencing at age 65 (which is Plan E's normal retirement age), based on a percentage of highest average compensation times the participant's years of service. Plan E permits any participant who has had a severance from employment to elect payment in the following optional forms of benefit (with spousal consent if applicable), with any payment not made in a straight life annuity converted to an equivalent form based on reasonable actuarial assumptions: A straight life annuity; and a 50 percent, 75 percent, or 100 percent joint and survivor annuity. The payment of benefits may commence at any time after attainment of age 55, with an actuarial reduction if the commencement is before normal retirement age. In addition, the plan offers a single-sum payment after attainment of age 55 equal to the present value of the normal retirement benefit using the applicable interest rate and mortality table under section 417(e)(3) in effect under the terms of the plan on the annuity starting date.

(ii) *Facts relating to the conversion amendment.* On January 1, 2012, Plan E is amended to eliminate future accruals under the highest average compensation benefit formula and to base future benefit accruals under a hypothetical account balance formula. For service on or after January 1, 2012, each participant's hypothetical account balance is credited monthly with a pay credit equal to a specified percentage of the participant's compensation during the month and also with interest based on the third segment rate described in section

430(h)(2)(C)(iii). With respect to benefits under the hypothetical account balance attributable to service on and after January 1, 2012, a participant is permitted to elect (with spousal consent if applicable) payment in the same generalized optional forms of benefit (even though different actuarial factors apply) as under the terms of the plan in effect before January 1, 2012, and also as a single-sum distribution. The plan provides for the benefit attributable to service before January 1, 2012, to be determined under the terms of the plan as in effect immediately before the effective date of the amendment, and the benefit attributable to service on and after January 1, 2012, to be determined separately, under the terms of the plan as in effect after the effective date of the amendment, with neither benefit offsetting the other in any manner. Thus, each participant's benefit is equal to the sum of the benefit attributable to service before January 1, 2012 (to be determined under the terms of the plan as in effect immediately before the effective date of the amendment), plus the benefit attributable to the participant's hypothetical account balance.

(iii) *Facts relating to an affected participant.* Participant A is age 62 on January 1, 2012. On December 31, 2011, A's benefit for years of service before January 1, 2012, payable as a straight life annuity commencing at A's normal retirement age (age 65), which is January 1, 2015, is $1,000 per month. On January 1, 2015, when Participant A has a severance from employment, the then-current hypothetical account balance, with pay credits and interest from January 1, 2012, to January 1, 2015, is $11,000. Using the conversion factors applicable under the plan on January 1, 2015, that balance is equivalent to a straight life annuity of $100 per month commencing on January 1, 2015. This benefit is in addition to the benefit attributable to service before January 1, 2012. Participant A elects (with spousal consent) a straight life annuity of $1,100 per month commencing January 1, 2015.

(iv) *Conclusion.* Participant A's benefit satisfies the requirements of paragraph (c) of this section because Participant A's benefit is not less than the sum of Participant A's section 411(d)(6) protected benefit (as defined in § 1.411(d)–3(g)(14)) with respect to service before the effective date of the conversion amendment, determined under the terms of the plan as in effect immediately before the effective date of the amendment, and Participant A's section 411(d)(6) protected benefit with respect to service on and after the effective date of the conversion amendment, determined under the terms of the plan as in effect after the effective date of the amendment.

Example 2. (i) *Facts involving plan's establishment of opening hypothetical account balance and payment of pre-conversion accumulated benefit in life annuity at normal retirement age.* Except as indicated in this *Example 2,* the facts are the same as the facts under paragraph (i) of *Example 1.*

(ii) *Facts relating to the conversion amendment.* On January 1, 2012, Plan E is amended to eliminate future accruals under the highest average compensation benefit formula and to provide future benefit accruals under a hypothetical account balance formula. An opening hypothetical account balance is established for each participant, and, under the plan's terms, that balance is equal to the present value of the participant's accumulated benefit on December 31, 2011 (payable as a straight life annuity at normal retirement age or immediately, if later), using the applicable interest rate and applicable mortality table under section 417(e)(3) on January 1, 2012. Under Plan E, the account based on this opening hypothetical account balance is maintained as a separate account from the account for accruals on or after January 1, 2012. The hypothetical account balance maintained for each participant for accruals on or after January 1, 2012, is credited monthly with a pay credit equal to a specified percentage of the participant's compensation during the month. A participant's hypothetical account balance (including both of the separate accounts) is credited monthly with interest based on the third segment rate described in section 430(h)(2)(C)(iii).

(iii) *Facts relating to optional forms of benefit.* Following severance from employment and attainment of age 55, a participant is permitted to elect (with spousal consent, if applicable) payment in the same generalized optional forms of benefit as under the plan in effect prior to January 1, 2012, with the amount payable calculated based on the hypothetical account balance on the annuity starting date and the applicable interest rate and applicable mortality table on the annuity starting date. The single-sum distribution is equal to the hypothetical account balance.

(iv) *Facts relating to conversion protection.* The plan provides that, as of a participant's annuity starting date, the plan will determine whether the benefit attributable to the opening hypothetical account payable in the particular optional form of benefit selected is equal to or greater than the benefit accrued under the plan through the date of conversion and payable in the same generalized optional form of benefit with the same annuity starting date. If the benefit attributable to the opening hypothetical account balance is equal to or greater than the pre-conversion benefit, the plan provides that such benefit is paid in lieu of the pre-conversion benefit, together with the benefit attributable to post-conversion pay-based principal credits. If the benefit attributable to the opening hypothetical account balance is less than the pre-conversion benefit, the plan provides that such benefit is increased sufficiently to provide the pre-conversion benefit, together with the benefit attributable to post-conversion pay-based principal credits.

(v) *Facts relating to an affected participant.* On January 1, 2012, the opening hypothetical account balance established for Participant A is $80,000, which is the present value of Participant A's straight life annuity of $1,000 per month commencing at January 1, 2015, using the applicable interest rate and applicable mortality table under section 417(e)(3) in effect on January 1, 2012. On January 1, 2012, the applicable interest rate for Participant A is equivalent to a level rate of 5.5 percent. Thereafter, Participant A's hypothetical account balance for subsequent accruals is credited monthly with a pay credit equal to a specified percentage of the participant's compensation during the month. In addition, Participant A's hypothetical account balance (including both of the separate accounts) is credited monthly with interest based on the third segment rate described in section 430(h)(2)(C)(iii).

(vi) *Facts relating to calculation of the participant's benefit.* Participant A has a severance from employment on January 1, 2015 at age 65, and elects (with spousal consent) a straight life annuity commencing January 1, 2015. On January 1, 2015, the opening hypothetical account balance, with interest credits from January 1, 2012, to January 1, 2015, has become $95,000, which, using the conversion factors under the plan on January 1, 2015, is equivalent to a straight life annuity of $1,005 per month commencing on January 1, 2015 (which is greater than the $1,000 a month payable at age 65 under the terms of the plan in effect before January 1, 2012). This benefit is in addition to the benefit determined using the hypothetical account balance for service after January 1, 2012.

(vii) *Conclusion.* The benefit satisfies the requirements of paragraph (c)(3)(ii)(A) of this section with respect to Participant A because A's benefit is not less than the sum of (A) the greater of Participant A's benefits attributable to the opening hypothetical account balance and A's section 411(d)(6) protected benefit (as defined in § 1.411(d)–3(g)(14)) with respect to service before the effective date of the conversion amendment, determined under the terms of the plan as in effect immediately before the effective date of the amendment, and (B) Participant A's section 411(d)(6) protected benefit with respect to service on and after the effective date of the conversion amendment, determined under the terms of the plan as in effect after the effective date of the amendment.

Example 3. (i) *Facts involving a subsequent decrease in interest rates.* The facts are the same as in *Example 2,* except that, because of a decrease in bond rates after January 1, 2012, and before January 1, 2015, the rate of interest credited in that period averages less than 5.5 percent, and, on January 1, 2015, the effective applicable interest rate under section 417(e)(3) under the plan's terms is 4.7 percent. As a result, Participant A's opening hypothetical account balance plus attributable interest credits has increased to only $87,000 on January 1, 2015, and, using the conversion factors under the plan on January 1, 2015, is equivalent to a straight life annuity commencing on January 1, 2015, of $775 per month. Under the terms of Plan E, the benefit attributable to A's opening account balance is increased so that A's straight life annuity commencing on January 1, 2015, is $1,000 per month. This benefit is in addition to the benefit attributable to the hypothetical account balance for service after January 1, 2012.

(ii) *Conclusion.* The benefit satisfies the requirements of paragraph (c)(3)(ii)(A) of this section with respect to Participant A because A's benefit is not less than the sum of—

(A) The greater of A's benefits attributable to the opening hypothetical account balance and A's section 411(d)(6) protected benefit (as defined in § 1.411(d)–3(g)(14)) with respect to service before the effective date of the conversion amendment, determined under the terms of the plan as in effect immediately before the effective date of the amendment; and

(B) A's section 411(d)(6) protected benefit with respect to service on and after the effective date of the conversion amendment, determined under the terms of the plan as in effect after the effective date of the amendment.

Example 4. (i) *Facts involving payment of a subsidized early retirement benefit.* The facts are the same as in *Example 2,* except that under the terms of Plan E on December 31, 2011, a participant who retires before age 65 and after age 55 with 30 years of service has only a 3 percent per year actuarial reduction. Participant A has a severance from employment on January 1, 2013, when A is age 63 and has 30 years of service. On January 1, 2013, A's opening hypothetical account balance, with interest from January 1, 2012, to January 1, 2013, has become $86,000, which, using the conversion factors under the plan (as amended) on January 1, 2013, is equivalent to a straight life annuity commencing on January 1, 2013, of $850 per month.

(ii) *Facts relating to calculation of the participant's benefit.* Under the terms of Plan E on December 31, 2011, Participant A is entitled to a straight life annuity commencing on January 1, 2013, equal to at least $940 per month ($1,000 reduced by 3 percent for each of the 2 years that A's benefits commence before normal retirement age). Under the terms of Plan E, the benefit attributable to A's opening account balance is increased so that A is entitled to a straight life annuity of $940 per month commencing on January 1, 2015. This benefit is in addition to the benefit determined using the hypothetical account balance for service after January 1, 2012.

(iii) *Conclusion.* The benefit satisfies the requirements of paragraph (c)(3)(ii)(A) of this section with respect to Participant A because A's benefit is not less than the sum of—

(A) The greater of Participant A's benefits attributable to the opening hypothetical account balance (increased by attributable interest credits) and A's section 411(d)(6) protected benefit (as defined in § 1.411(d)–3(g)(14)) with respect to service before the effective date of the conversion amendment, determined under the terms of the plan as in effect immediately before the effective date of the amendment; and

(B) Participant A's section 411(d)(6) protected benefit with respect to service on and after the effective date of the conversion amendment, determined under the terms of the plan as in effect after the effective date of the amendment.

Example 5. (i) *Facts involving addition of a single-sum payment option.* The facts are the same as in *Example 2,* except that, before January 1, 2012, Plan E did not offer payment in a single-sum distribution for amounts in excess of $5,000. Plan E, as amended on January 1, 2012, offers payment in any of the available annuity distribution forms commencing at any time following severance from employment as were provided under Plan E before January 1, 2012. In addition, Plan E, as amended on January 1, 2012, offers payment in the form of a single sum attributable to service before January 1, 2012, which is the greater of the opening hypothetical account balance (increased by attributable interest credits) or a single-sum distribution of the straight life annuity payable at age 65 using the same actuarial factors as are used for mandatory cashouts for amounts equal to $5,000 or less under the terms of the plan on December 31, 2011. Participant B is age 40 on January 1, 2012, and B's opening hypothetical account balance (increased by attributable interest credits) is $33,000 (which is the present value, using the conversion factors under the plan (as amended) on January 1, 2012, of Participant B's straight life annuity of $1,000 per month commencing at January 1, 2037, which is when B will be age 65). Participant B has a severance from employment on January 1, 2015, and elects (with spousal consent) an immediate single-sum distribution. Participant B's opening hypothetical account balance (increased by attributable interest) on January 1, 2015, is $45,000. The present value, on January 1, 2015, of Participant B's benefit of $1,000 per month, commencing immediately using the actuarial factors for mandatory cashouts under the terms of the plan on December 31, 2011, would result in a single-sum payment of $44,750. Participant B is paid a single-sum distribution equal to the sum of $45,000 plus an amount equal to B's January 1, 2015, hypothetical account balance for benefit accruals for service after January 1, 2012.

(ii) *Conclusion.* Because, under Plan E, Participant B is entitled to the sum of—

(A) The greater of the $45,000 opening hypothetical account balance (increased by attributable interest credits) and $44,750 (present value of the benefit with respect to service prior to January 1, 2012, using the actuarial factors for mandatory cashout distributions under the terms of the plan on December 31, 2011); and

(B) An amount equal to B's hypothetical account balance for benefit accruals for service after January 1, 2012, the benefit satisfies the requirements of paragraph (c)(3)(ii)(A) of this section with respect to Participant B. If Participant B's hypothetical account balance under Plan E was instead less than $44,750 on January 1, 2015, Participant B would be entitled to a single-sum payment equal to the sum of $44,750 and an amount equal to B's hypothetical account balance for benefit accruals for service after January 1, 2012.

Example 6. (i) *Facts involving addition of new annuity optional form of benefit.* The facts are the same as in *Example 2,* except that, after December 31, 2011, and before January 1, 2015, Plan E is amended to offer payment in a 5-, 10-, or 15-year term certain and life annuity, using the same actuarial assumptions that apply for other optional forms of distribution. When Participant A has a severance from employment on January 1, 2015, A elects (with spousal consent) a 5-year term certain and life annuity commencing immediately equal to $935 per month. Application of the same actuarial assumptions to Participant A's benefit of $1,000 per month (under Plan E as in effect on December 31, 2011), commencing immediately on January 1, 2015, would result in a 5-year term certain and life annuity commencing immediately equal to $955 per month. Under the terms of Plan E, the benefit attributable to A's opening account balance is increased so that, using the conversion factors under the plan (as amended) on January 1, 2015, A's opening hypothetical account balance (increased by attributable interest credits) produces a 5-year term certain and life annuity commencing immediately equal to $955 per month commencing on January 1, 2015. This benefit is in addition to the benefit determined using the January 1, 2015, hypothetical account balance for service after January 1, 2012.

(ii) *Conclusion.* This benefit satisfies the requirements of paragraph (c)(3)(ii)(A) of this section with respect to Participant A.

Example 7. (i) *Facts involving addition of distribution option before age 55.* The facts are the same as in *Example 5,* except that Participant B (age 43) elects (with spousal consent) a straight life annuity commencing immediately on January 1, 2015. Under Plan E, the straight life annuity attributable to Participant B's opening hypothetical account balance at age 43 is $221 per month. Application of the same actuarial assumptions to Participant B's benefit of $1,000 per month commencing at age 65 (under Plan E as in effect on December 31, 2011) would result in a straight life annuity commencing immediately on January 1, 2015, equal to $219 per month.

(ii) *Conclusion.* Because, under its terms, Plan E provides that Participant B is entitled to an amount not less than the present value (using the same actuarial assumptions as apply on January 1, 2015, in converting the $45,000 hypothetical account balance attributable to the opening hypothetical account balance to the $221 straight life annuity) of Participant B's straight life annuity of $1,000 per month commencing at age 65, and the $221 straight life annuity is in addition to the benefit accruals for service after January 1, 2012, payment of the $221 monthly annuity would satisfy the requirements of paragraph (c)(3)(ii)(A) of this section with respect to Participant B.

(d) *Market rate of return*—(1) *In general*—(i) *Basic test.* Subject to the rules of paragraph (e) of this section, a statutory hybrid plan satisfies the requirements of section 411(b)(1)(H) and this paragraph (d) only if, for any plan year, the interest crediting rate with respect to benefits determined under a statutory hybrid benefit formula is not greater than a market rate of return.

(ii) *Definitions relating to market rate of return*—(A) *Interest credit.* Subject to other rules in this paragraph (d), an interest credit for purposes of this paragraph (d) and section 411(b)(5)(B) means the following adjustments to a participant's accumulated benefit under a statutory hybrid benefit formula, to the extent not conditioned on current

service and not made on account of imputed service (as defined in § 1.401(a)(4)–11(d)(3)(ii)(B))—

(*1*) Any increase or decrease for a period, under the terms of the plan at the beginning of the period, that is calculated by applying a rate of interest or rate of return (including a rate of increase or decrease under an index) to the participant's accumulated benefit (or a portion thereof) as of the beginning of the period; and

(*2*) Any other increase for a period, under the terms of the plan at the beginning of the period.

(B) *Treatment of plan amendments.* An increase to a participant's accumulated benefit is not treated as an interest credit to the extent the increase is made as a result of a plan amendment providing for a one-time adjustment to the participant's accumulated benefit. However, a pattern of repeated plan amendments each of which provides for a one-time adjustment to a participant's accumulated benefit will cause such adjustments to be treated as provided on a permanent basis under the terms of the plan. *See* § 1.411(d)–4, A–1(c)(1).

(C) *Interest crediting rate.* Except as otherwise provided in this paragraph (d), the interest crediting rate, or effective rate of return, for a period with respect to a participant equals the total amount of interest credits for the period divided by the participant's accumulated benefit at the beginning of the period.

(D) *Principal credit.* For purposes of this paragraph (d), a principal credit means any increase to a participant's accumulated benefit under a statutory hybrid benefit formula that is not an interest credit. Thus, for example, a principal credit includes an increase to a participant's accumulated benefit to the extent the increase is conditioned on current service or made on account of imputed service. As a result, a principal credit includes an increase to the value of an accumulated percentage of the participant's final average compensation. For indexed benefits described in paragraph (b)(2) of this section, a principal credit includes an increase to the participant's accrued benefit other than an increase provided by indexing. In addition, pursuant to the rule in paragraph (d)(1)(ii)(B) of this section, a principal credit generally includes an increase to a participant's accumulated benefit to the extent the increase is made as a result of a plan amendment providing for a one-time adjustment to the participant's accumulated benefit. As a result, a principal credit includes an opening hypothetical account balance or opening accumulated percentage of the participant's final average compensation, as described in paragraph (c)(3) of this section.

(iii) *Market rate of return for single rates.* Except as is otherwise provided in this paragraph (d)(1), an interest crediting rate is not in excess of a market rate of return only if the plan terms provide that the interest credit for each plan year is determined using one of the following specified interest crediting rates:

(A) The interest rate on long-term investment grade corporate bonds (as described in paragraph (d)(3) of this section).

(B) An interest rate that, under paragraph (d)(4) of this section, is deemed to be not in excess of the interest rate described in paragraph (d)(3) of this section.

(C) A rate of return that, under paragraph (d)(5) of this section, is not in excess of a market rate of return.

(iv) *Timing and other rules related to interest crediting rate*—(A) *In general.* A plan that provides interest credits must specify how the plan determines interest credits and must specify how and when interest credits are credited. The plan must specify the method for determining interest credits in accordance with the requirements of paragraph (d)(1)(iv)(B) of this section, the frequency of interest crediting in accordance with the requirements of paragraph (d)(1)(iv)(C) of this section, and the treatment of interest credits on distributed amounts, as well as other debits and credits during the period, in accordance with the rules of paragraph (d)(1)(iv)(D) of this section. See paragraph (e) of this section for additional rules that apply to changes in the interest crediting rate.

(B) *Methods to determine interest credits.* A plan that is using any specified interest crediting rate can determine interest credits for each current interest crediting period based on the effective periodic interest crediting rate that applies over the period. Alternatively, a plan that is using one of the interest crediting rates described in paragraph (d)(3) or (d)(4) of this section can determine interest credits for a stability period based on the interest crediting rate for a specified lookback month with respect to that stability period. For purposes of the preceding sentence, the stability period and lookback month must satisfy the rules for selecting the stability period and lookback month under § 1.417(e)–1(d)(4), although the interest crediting rate can be any one of the rates in paragraph (d)(3) or (d)(4) of this section and the stability period and lookback month need not be the same as those used under the plan for purposes of section 417(e)(3).

(C) *Frequency of interest crediting.* Interest credits under a plan must be provided on an annual or more frequent periodic basis and interest credits for each interest crediting period must be credited as of the end of the period. If a plan provides for the crediting of interest more frequently than annually (for example, daily, monthly or quarterly) based on one of the annual interest rates described in paragraph (d)(3) or (d)(4) of this section, then the plan generally provides an above market rate of return unless each periodic interest credit is determined using an interest crediting rate that is no greater than a pro rata portion of the applicable annual interest crediting rate. However, a plan that credits interest daily based on one of the annual interest rates described in paragraph (d)(3) or (d)(4) of this section is not treated as providing an above market rate of return merely because the plan determines each daily interest credit using a daily interest crediting rate that is 1/360 of the applicable annual interest crediting rate. In addition, interest credits determined, under the terms of a plan, based on one of the annual interest rates described in paragraph (d)(3) or (d)(4) of this section are not treated as creating an effective rate of return that is in excess of a market rate of return merely because an otherwise permissible interest crediting rate for a plan year is compounded more frequently than annually. Thus, for example, if a plan's terms provide for interest to be credited monthly and for the interest crediting rate to be equal to the interest rate on long-term investment grade corporate bonds (as described in paragraph (d)(3) of this section) and the applicable annual rate on these bonds for the plan year is 6 percent, then the accumulated benefit at the beginning of each month could be increased as a result of interest credits by as much as 0.5 percent per month during the plan year without resulting in an interest crediting rate that is in excess of a market rate of return.

(D) *Debits and credits during the interest crediting period.* [Reserved].

(v) *Lesser rates.* An interest crediting rate is not in excess of a market rate of return if the rate can never be in excess of a particular rate that is described in paragraph (d)(1)(iii) of this section. Thus, for example, an interest crediting rate that always equals the rate described in paragraph (d)(3) of this section minus 200 basis points is not in excess of a market rate of return because it can never be in excess of the rate described in paragraph (d)(3) of this section. Similarly, an interest crediting

rate that always equals the lesser of the yield on 30-year Treasury bonds and a fixed 6 percent interest rate is not in excess of a market rate of return because it can never be in excess of the yield on 30-year Treasury bonds.

(vi) *Greater-of rates.* If a statutory hybrid plan determines an interest credit by applying the greater of 2 or more different rates to the accumulated benefit, the effective interest crediting rate is not in excess of a market rate of return only if each of the different rates would separately satisfy the requirements of this paragraph (d) and the requirements of paragraph (d)(6) of this section are also satisfied.

(vii) *Blended rates.* A statutory hybrid plan does not provide an effective interest crediting rate that is in excess of a market rate of return merely because the plan determines an interest credit by applying different rates to different predetermined portions of the accumulated benefit, provided each rate would separately satisfy the requirements of this paragraph (d) if the rate applied to the entire accumulated benefit.

(2) *Preservation of capital requirement*—(i) *General rule.* A statutory hybrid plan satisfies the requirements of section 411(b)(1)(H) only if the plan provides that the participant's benefit under the statutory hybrid benefit formula determined as of the participant's annuity starting date is no less than the benefit based on the sum of all principal credits (as described in paragraph (d)(1)(ii)(D) of this section) credited under the plan to the participant as of that date (including principal credits that were credited before the applicable statutory effective date of paragraph (f)(1) of this section).

(ii) *Application to multiple annuity starting dates.* [Reserved].

(iii) *Exception for variable annuity benefit formulas. See* paragraph (b)(2)(iii)(B) of this section for an exception to this paragraph (d)(2).

(3) *Long-term investment grade corporate bonds.* For purposes of this paragraph (d), the rate of interest on long-term investment grade corporate bonds means the third segment rate described in section 417(e)(3)(D) or 430(h)(2)(C)(iii) (determined with or without regard to the transition rules of section 417(e)(3)(D)(ii) or 430(h)(2)(G)). However, for plan years beginning prior to January 1, 2008, the rate of interest on long-term investment grade corporate bonds means the rate described in section 412(b)(5)(B)(ii)(II) prior to amendment by the Pension Protection Act of 2006, Public Law 109–280 (120 Stat. 780) (PPA '06).

(4) *Safe harbor rates of interest*—(i) *In general.* This paragraph (d)(4) identifies interest rates that are deemed to be not in excess of the interest rate described in paragraph (d)(3) of this section. The Commissioner may, in guidance of general applicability, specify additional interest crediting rates that are deemed to be not in excess of the rate described in paragraph (d)(3) of this section. See § 601.601(d)(2)(ii)(*b*).

(ii) *Rates based on bonds with margins*—(A) *In general.* An interest crediting rate is deemed to be not in excess of the interest rate described in paragraph (d)(3) of this section if the rate is equal to the sum of any of the following rates of interest for bonds and the associated margin for that interest rate:

Interest rate bond index	Associated margin
The discount rate on 3-month Treasury Bills	175 basis points.
The discount rate on 12-month or shorter Treasury Bills	150 basis points.
The yield on 1-year Treasury Constant Maturities	100 basis points.
The yield on 3-year or shorter Treasury bonds	50 basis points.
The yield on 7-year or shorter Treasury bonds	25 basis points.
The yield on 30-year or shorter Treasury bonds	0 basis points.
The first segment rate	0 basis points.
The second segment rate	0 basis points.

(B) *Rule of application.* For purposes of this paragraph (d)(4), the first and second segment rates mean the first and second segment rates described in section 417(e)(3)(D) or 430(h)(2)(C), determined with or without regard to the transition rules of section 417(e)(3)(D)(ii) or 430(h)(2)(G).

(iii) *Eligible cost-of-living indices.* An interest crediting rate is deemed to be not in excess of the interest rate described in paragraph (d)(3) of this section if the rate is adjusted no less frequently than annually and is equal to the rate of increase with respect to an eligible cost-of-living index described in § 1.401(a)(9)–6, A–14(b), except that, for purposes of this paragraph (d)(4)(iii), the eligible cost-of-living index described in § 1.401(a)(9)–6, A–14(b)(2) is increased by 300 basis points.

(iv) *Fixed rate of interest.* [Reserved].

(5) *Other rates of return*—(i) *General rule.* This paragraph (d)(5) sets forth additional methods for determining an interest crediting rate that is not in excess of a market rate of return.

(ii) *Actual rate of return on plan assets.* In the case of indexed benefits described in paragraph (b)(2) of this section, an interest crediting rate equal to the actual rate of return on the aggregate assets of the plan, including both positive returns and negative returns, is not in excess of a market rate of return if the plan's assets are diversified so as to minimize the volatility of returns. This requirement that plan assets be diversified so as to minimize the volatility of returns does not require greater diversification than is required under section 404(a)(1)(C) of Title I of the Employee Retirement Income Security Act of 1974, Public Law 93–406 (88 Stat. 829 (1974)) with respect to defined benefit pension plans.

(iii) *Annuity contract rates.* The rate of return on the annuity contract for the employee issued by an insurance company licensed under the laws of a State is not in excess of a market rate of return. However, this paragraph (d)(5)(iii) does not apply if the Commissioner determines that the annuity contract has been structured to provide an interest crediting rate that is in excess of a market rate of return.

(iv) *Rate of return on certain RICs.* [Reserved].

(6) *Combinations of rates of return*—(i) *In general.* A plan that determines interest credits based, in whole or in part, on the greater of two or more different interest crediting rates provides an effective interest crediting rate in excess of a market rate of return unless the combination of rates is described in paragraph (d)(6)(ii), (d)(6)(iii), (e)(3)(iii), or (e)(4) of this section. However, a plan is not treated as providing the greater of two or more interest crediting rates merely because the plan satisfies the requirements of paragraph (d)(2) of this section. In addition, a plan is not treated as providing the greater of two or more interest crediting rates merely because a

rate of return described in paragraph (d)(5)(iii) of this section is itself based on the greater of two or more rates.

(ii) *Annual or more frequent floor applied to bond-based rates.* [Reserved].

(iii) *Cumulative floor applied to equity-based or bond-based rates.* [Reserved].

(e) *Other rules regarding market rates of return*—(1) *In general.* This paragraph (e) sets forth additional rules regarding the application of the market rate of return requirement with respect to benefits determined under a statutory hybrid benefit formula.

(2) *Plan termination.* [Reserved].

(3) *Rules relating to section 411(d)(6)*—(i) *General rule.* The right to interest credits in the future that are not conditioned on future service constitutes a section 411(d)(6) protected benefit (as defined in § 1.411(d)–3(g)(14)). Thus, to the extent that benefits have accrued under the terms of a statutory hybrid plan that entitle the participant to future interest credits, an amendment to the plan to change the interest crediting rate must satisfy section 411(d)(6) if the revised rate under any circumstances could result in interest credits that are smaller as of any date after the applicable amendment date (within the meaning of § 1.411(d)–3(g)(4)) than the interest credits that would be provided without regard to the amendment. For additional rules, see § 1.411(d)–3(b). Paragraphs (e)(3)(ii) and (e)(3)(iii) of this section set forth special rules that apply regarding the interaction of section 411(d)(6) and changes to a plan's interest crediting rate. The Commissioner may, in guidance of general applicability, prescribe additional rules regarding the interaction of section 411(d)(6) and section 411(b)(5), including changes to a plan's interest crediting rate. See § 601.601(d)(2)(ii)(*b*).

(ii) *Adoption of long-term investment grade corporate bond rate.* For purposes of applying section 411(d)(6) and this paragraph (e) to an amendment to change to the interest crediting rate described in paragraph (d)(3) of this section, a plan is not treated as providing interest credits that are smaller as of any date after the applicable amendment date than the interest credits that would be provided using an interest crediting rate described in paragraph (d)(4) of this section merely because the plan credits interest after the applicable amendment date using the interest crediting rate described in paragraph (d)(3) of this section, provided—

(A) The amendment only applies to interest credits to be credited after the effective date of the amendment;

(B) The effective date of the amendment is at least 30 days after adoption of the amendment; and

(C) On the effective date of the amendment, the new interest crediting rate is not lower than the interest crediting rate that would have applied in the absence of the amendment.

(iii) *Coordination of section 411(d)(6) and market rate of return limitation.* [Reserved].

(4) *Actuarial increases after normal retirement age.* [Reserved].

(f) *Effective/applicability date*—(1) *Statutory effective/applicability dates*—(i) *In general.* Except as provided in paragraph (f)(1)(iii) of this section, section 411(b)(5) applies for periods beginning on or after June 29, 2005.

(ii) *Conversion amendments.* The requirements of section 411(b)(5)(B)(ii), 411(b)(5)(B)(iii), and 411(b)(5)(B)(iv) apply to a conversion amendment (as defined in paragraph (c)(4) of this section) that both is adopted on or after June 29, 2005, and takes effect on or after June 29, 2005.

(iii) *Market rate of return*—(A) *Plans in existence on June 29, 2005*—(*1*) *In general.* In the case of a plan that was in existence on June 29, 2005 (regardless of whether the plan was a statutory hybrid plan on that date), section 411(b)(5)(B)(i) applies to plan years that begin on or after January 1, 2008.

(*2*) *Exception for plan sponsor election.* Notwithstanding paragraph (f)(1)(iii)(A)(*1*) of this section, a plan sponsor of a plan that was in existence on June 29, 2005 (regardless of whether the plan was a statutory hybrid plan on that date) may elect to have the requirements of section 411(a)(13)(B) and section 411(b)(5)(B)(i) apply for any period on or after June 29, 2005, and before the first plan year beginning after December 31, 2007. In accordance with section 1107 of the PPA '06, an employer is permitted to adopt an amendment to make this election as late as the last day of the first plan year that begins on or after January 1, 2009 (January 1, 2011, in the case of a governmental plan as defined in section 414(d)) if the plan operates in accordance with the election.

(B) *Plans not in existence on June 29, 2005.* In the case of a plan not in existence on June 29, 2005, section 411(b)(5)(B)(i) applies to the plan on and after the later of June 29, 2005, and the date the plan becomes a statutory hybrid plan.

(iv) *Collectively bargained plans*—(A) *In general.* Notwithstanding paragraph (f)(1)(iii) of this section, in the case of a collectively bargained plan maintained pursuant to one or more collective bargaining agreements between employee representatives and one or more employers ratified on or before August 17, 2006, the requirements of section 411(b)(5)(B)(i) do not apply to plan years that begin before the earlier of—

(*1*) The later of—

(*i*) The date on which the last of those collective bargaining agreements terminates (determined without regard to any extension thereof on or after August 17, 2006); or

(*ii*) January 1, 2008; or

(*2*) January 1, 2010.

(B) *Treatment of plans with both collectively bargained and non-collectively bargained employees.* In the case of a plan with respect to which a collective bargaining agreement applies to some, but not all, of the plan participants, the plan is considered a collectively bargained plan for purposes of this paragraph (f)(1)(iv) if it is considered a collectively bargained plan under the rules of § 1.436–1(a)(5)(ii)(B).

(2) *Effective/applicability date of regulations*—(i) *In general*—(A) *General effective date.* Except as provided in paragraph (f)(2)(i)(B) of this section, this section applies to plan years that begin on or after January 1, 2011.

(B) *Special effective date.* Paragraphs (d)(1)(iii), (d)(1)(vi), and (d)(6)(i) of this section apply to plan years that begin on or after January 1, 2012.

(ii) *Conversion amendments.* With respect to a conversion amendment (within the meaning of paragraph (c)(4) of this section), where the effective date of the conversion amendment (as defined in paragraph (c)(4)(vi) of this section) is on or after the statutory effective date set forth in paragraph (f)(1)(ii) of this section, the requirements of paragraph (c)(2) of this section apply only to a participant who has an hour of service on or after the regulatory effective date set forth in paragraph (f)(2)(i) of this section.

(iii) *Reliance before regulatory effective date.* For the periods after the statutory effective date set forth in paragraph (f)(1) of this section and before the regulatory effective date set forth in paragraph (f)(2)(i) of this section, the safe harbor and other relief of section 411(b)(5) applies and the market rate of return and other requirements of section 411(b)(5) must be satisfied. During these periods, a plan is permitted to rely on the provisions of this section for purposes of applying the

relief and satisfying the requirements of section 411(b)(5).

Steven T. Miller,

Deputy Commissioner for Services and Enforcement.

Approved: September 17, 2010.

Michael F. Mundaca,

Assistant Secretary of the Treasury for Tax Policy.

[FR Doc. 2010–25941 Filed 10–18–10; 8:45 am]

BILLING CODE 4830–01–P

DEPARTMENT OF THE TREASURY

Office of the Secretary

31 CFR Part 1

Privacy Act; Implementation

AGENCY: Office of the Secretary, Treasury.

ACTION: Final rule.

SUMMARY: The Department of the Treasury is adopting, without change, an interim rule that amended its regulations on the Privacy Act of 1974, as Amended, by removing three Privacy Act systems of records from this part, revising the title of the one remaining Privacy Act system of records relating to the functions of the Alcohol and Tobacco Tax and Trade Bureau, and retaining the Privacy Act exemptions for TTB's one remaining system of records.

DATES: *Effective Date:* October 19, 2010.

FOR FURTHER INFORMATION CONTACT: Karen Welch, Regulations and Rulings Division, Alcohol and Tobacco Tax and Trade Bureau (202–453–2046) or *Karen.Welch@ttb.gov*.

SUPPLEMENTARY INFORMATION: Effective January 24, 2003, the Homeland Security Act of 2002 divided the Bureau of Alcohol, Tobacco and Firearms (ATF) into two new Agencies, the Alcohol and Tobacco Tax and Trade Bureau (TTB) and the Bureau of Alcohol, Tobacco, Firearms and Explosives (ATFE) in the Department of Justice. ATFE oversees Federal firearms, explosives, and arson laws and programs, and administers laws pertaining to alcohol and tobacco smuggling and diversion. TTB is responsible for administering chapters 51 (relating to distilled spirits, wine, and beer) and 52 (relating to tobacco products and cigarette papers and tubes) of title 26 U.S.C., the Internal Revenue Code of 1986, as amended (IRC). TTB also administers sections 4181 and 4182 (relating to the excise tax on firearms and ammunition) of the IRC and title 27 of the U.S.C. (relating to alcohol).

After the organizational change, TTB conducted a review of its records to determine which records are Privacy Act systems of records. The review determined that one of the six ATF systems of records still existed within TTB, and five of ATF's six systems of records could be removed from the Department of the Treasury's Privacy Act systems of records inventory. As a result of this review, on September 2, 2008, the Department of the Treasury published in the **Federal Register** at 73 FR 51344 a notice of systems of records for the one system currently in TTB's inventory, "Treasury/TTB .001–Regulatory Enforcement Record System."

The changes in organization and in TTB's inventory of systems of records also required changes to the Department of the Treasury's regulations in 31 CFR part 1. On September 2, 2008, the Department of the Treasury published in the **Federal Register** (73 FR 51218) an interim rule amending 31 CFR 1.20 and 1.36 by revising the title of the Bureau from "Bureau of Alcohol, Tobacco and Firearms" to "Alcohol and Tobacco Tax and Trade Bureau," by removing three Privacy Act systems of records from the 31 CFR 1.36, by renaming the one remaining system of records, and by retaining the prior exemption from certain provisions of the Privacy Act pursuant to 5 U.S.C. 552a(k)(2) for the one remaining, renamed system of records.

The interim rule also invited the submission of public comments on the regulatory amendments, prior to the comment period closing on October 2, 2008. The Department did not receive any comments on the interim rule. Accordingly, we have determined that it is appropriate to adopt that interim rule as a final rule without change.

In accordance with Executive Order 12866, it has been determined that this final rule is not a "significant regulatory action" and, therefore, does not require a Regulatory Impact Analysis. The regulation will not have a substantial direct effect on the States, on the relationship between the national Government and the States, or on the distribution of power and responsibilities among the various levels of government. Therefore, it has been determined that this final rule does not have federalism implications under Executive Order 13132.

Because no notice of proposed rulemaking is required, the provisions of the Regulatory Flexibility Act (5 U.S.C. 601 *et seq.*) do not apply.

List of Subjects in 31 CFR Part 1

Freedom of Information; Privacy.

The Regulatory Amendment

■ For the reasons discussed in the preamble, the interim rule amending 31 CFR part 1, published in the **Federal Register** at 73 FR 51218 on September 2, 2008, is adopted as a final rule without change.

Dated: September 28, 2010.

Melissa Hartman,

Deputy Assistant Secretary for Privacy, Transparency, and Records.

[FR Doc. 2010–26326 Filed 10–18–10; 8:45 am]

BILLING CODE 4810–31–P

DEPARTMENT OF HOMELAND SECURITY

Coast Guard

33 CFR Part 165

[Docket No. USCG–2010–0950]

Safety Zone, Brandon Road Lock and Dam to Lake Michigan Including Des Plaines River, Chicago Sanitary and Ship Canal, Chicago River, and Calumet-Saganashkee Channel, Chicago, IL

AGENCY: Coast Guard, DHS.

ACTION: Notice of enforcement of regulation.

SUMMARY: The Coast Guard will enforce a segment of the Safety Zone; Brandon Road Lock and Dam to Lake Michigan including Des Plaines River, Chicago Ship and Sanitary Canal, Chicago River, Calumet-Saganashkee Channel on all waters of the Chicago Sanitary and Ship Canal between Mile Marker 291.0 and Mile Marker 296.1 from 4 p.m. on October 19, 2010 to 12 p.m. on October 20, 2010 and from 4 p.m. on October 20, 2010 to 10 a.m. on October 21, 2010. This action is necessary to protect the waterways, waterway users, and vessels from hazards associated with intensive fish sampling efforts in the Lockport pool to be conducted by the Illinois Department of Natural Resources (IDNR). These sampling efforts will include the setting of nets throughout this portion of the Chicago Sanitary and Ship Canal. The purpose of this sampling is to provide essential information in connection with efforts to control the spread of aquatic nuisance species that might devastate the waters of the Chicago Sanitary and Ship Canal.

During the enforcement period, entry into, transiting, mooring, laying-up or anchoring within the enforced area of this safety zone by any person or vessel is prohibited unless authorized by the Captain of the Port, Sector Lake

Michigan, or his or her designated representative.

DATES: The regulations in 33 CFR 165.T09–0166 will be enforced from 4 p.m. on October 19, 2010 to 12 p.m. on October 20, 2010 and from 4 p.m. on October 20, 2010 to 10 a.m. on October 21, 2010.

FOR FURTHER INFORMATION CONTACT: If you have questions on this notice, call or e-mail CDR Tim Cummins, Deputy Prevention Division, Ninth Coast Guard District, telephone 216–902–6045, e-mail address *Timothy.M.Cummins@uscg.mil.*

SUPPLEMENTARY INFORMATION: The Coast Guard will enforce Safety Zone, Brandon Road Lock and Dam to Lake Michigan including Des Plaines River, Chicago Sanitary and Ship Canal, Chicago River, Calumet-Saganashkee Channel, Chicago, IL listed in 33 CFR 165.T09–0166(a)(2), on all waters of the Chicago Sanitary and Ship Canal between Mile Marker 291.0 and Mile Marker 296.1 from 4 p.m. on October 19, 2010 to 12 p.m. on October 20, 2010 and then again from 4 p.m. on October 20, 2010 to 10 a.m. on October 21, 2010.

This enforcement action is necessary because the Captain of the Port, Sector Lake Michigan has determined that the IDNR fish sampling effort poses risks to life and property. Specifically, there will be congested waterways and the extensive placement of nets throughout the portion of the Chicago Sanitary and Ship Canal between Mile Marker 291.0 and Mile Marker 296.1. The combination of vessel traffic, nets, and electric current in the water makes the control of vessels through the impacted portion of the Chicago Sanitary and Ship Canal necessary to prevent injury and property loss.

In accordance with the general regulations in § 165.23 of this part, entry into, transiting, mooring, laying up, or anchoring within the enforced area of this safety zone by any person or vessel is prohibited unless authorized by the Captain of the Port, Sector Lake Michigan, or his or her designated representative.

This notice is issued under authority of 33 CFR 165.T09–0166 and 5 U.S.C. 552(a). In addition to this notice in the **Federal Register**, the Captain of the Port, Sector Lake Michigan, will also provide notice through other means, which may include but are not limited to Broadcast Notice to Mariners, Local Notice to Mariners, local news media, distribution in leaflet form, and on-scene oral notice. Additionally, the Captain of the Port, Sector Lake Michigan, may notify representatives from the maritime industry through telephonic and e-mail notifications.

Dated: October 5, 2010.

L. Barndt,

Captain, U.S. Coast Guard, Captain of the Port, Sector Lake Michigan.

[FR Doc. 2010–26213 Filed 10–18–10; 8:45 am]

BILLING CODE 9110–04–P

DEPARTMENT OF THE INTERIOR

National Park Service

36 CFR Part 2

RIN 1024–AD91

General Regulation: National Park System

AGENCY: National Park Service, Interior.

ACTION: Interim rule with request for comments.

SUMMARY: The National Park Service (NPS) is issuing this interim general rule governing demonstrations and the sale and distribution of printed matter for most of the National Park System as well as request for comments. This rule revises the definition of what constitutes a demonstration and exempts individuals and small groups from the requirement to obtain a permit for demonstrations and the sale or distribution of printed matter, consistent with the decisions in the *Boardley* v. *Department of the Interior* litigation. This rule also refines how applications are processed and prohibits the harassment of visitors and obstruction of public passageways.

DATES:

Effective Date: October 19, 2010.

Comment Date: Comments must be received by December 20, 2010.

ADDRESSES: You may submit comments, identified by the number 1024–ADXX, by any of the following methods:

—*Federal Rulemaking Portal: http://www.regulations.gov.* Follow the instructions for submitting comments.

—*Mail:* National Park Service, Attn. Special Park Uses Program Manager, 1849 C St., NW., MS–3122, Washington, DC 20240.

All submissions received must include the agency name and RIN 1024–ADXX. For additional information see "Public Participation" under **SUPPLEMENTARY INFORMATION** below.

FOR FURTHER INFORMATION CONTACT: Lee Dickinson, Special Park Use Program Manager, 1849 C St., NW., Washington, DC., 20240 (202) 208–4206.

SUPPLEMENTARY INFORMATION:

Background

The NPS Organic Act, 16 U.S.C. 1, created the NPS to "promote and regulate the use of Federal areas known as national parks," and charged it with the following "fundamental purpose": "to conserve the scenery and the natural and historic objects and the wild life therein and to provide for the enjoyment of the same in such manner and by such means as will leave them unimpaired for future generations." In 1978, Congress enacted 16 U.S.C. 1a–1, which provides that all of the units of the National Park System

> * * * though distinct in character, are united through their inter-related purposes and resources into one national park system as cumulative expressions of a single national heritage; that, individually and collectively, these areas derive increased national dignity and recognition of their superlative environmental quality through their inclusion jointly with each other in one national park system preserved and managed for the benefit and inspiration of all the people of the United States. * * *

Congress also empowered the Secretary of the Interior, at 16 U.S.C. 3, to

> * * * make and publish such rules and regulations as he may deem necessary or proper for the use and management of the parks.

The National Park System currently consists of 392 park units. It covers more than 84 million acres and is located in every state (except Delaware), the District of Columbia, American Samoa, Guam, Puerto Rico, and the Virgin Islands. This area equals 131,753 square miles, which is larger than the total areas of the states of Pennsylvania, Tennessee and Virginia. These park units are located in a wide range of environments as diverse as the United States itself. They include urban areas, from the Town of Harpers Ferry to New York City; oceans, lakes, swamps and rivers; mountainous areas that go up in height to the 20,320-foot Mount McKinley; caves, canyons, cliffs, and karst; deserts, forests, and grasslands; and areas throughout the Nation's reach, from Buck Island Reef National Monument in the Caribbean, to War in the Pacific National Historical Park in Guam, to Gates of the Arctic National Park and Preserve above the Arctic Circle.

The size of these park units also varies tremendously. The largest National Park is Wrangell-St. Elias National Park and National Preserve, Alaska, at 13.2 million acres. Yellowstone National Park is 2,219,790 acres. The smallest unit of the National Park System is Thaddeus Kosciuszko National Memorial, Pennsylvania, at 0.02 acres. As detailed in the *NPS*

Overview (October, 2009), the National Park System is also habitat for 378 threatened or endangered species, has more than 100 million items in museum collections, has 1.5 million archaeological sites, and has 27,000 historic and prehistoric structures. The National Park System also has a physical infrastructure that includes 21,000 buildings, 17,000 miles of trails, 10,000 miles of paved and unpaved roads, 5,000 housing units, 22,000 campgrounds and picnic areas, 1,600 waste water treatment systems, and 1,400 water treatment systems.

About one-third of the units of the National Park System—such as Great Smoky Mountains National Park, Tennessee; Grand Canyon National Park, Arizona; Everglades National Park, Florida; and Hawaii Volcanoes National Parks, Hawaii—preserve nature's many and varied gifts to the Nation. The other two-thirds of the units of the National Park System recognize benchmarks of human history in America. These units protect elements of great native cultures, far older than European exploration and settlement; present battle sites from the Revolutionary and Civil Wars—including the key surrender fields of both great conflicts; embrace Thomas Edison's New Jersey laboratories where he and his staff led a technological revolution more dramatic even than the coming of the computer age; and more. These historical park units reflect the development of both art and industry in America, along with landmarks of social and political change.

As a broader understanding of history took hold, the National Park System eventually grew to include the historic homes of civil rights, political, and corporate leaders, and the lands of the poor, struggling to build lives for themselves on a Nebraska homestead claim or in an urban community. It now embraces the birthplace, church, and grave of Dr. Martin Luther King at Martin Luther King, Jr. National Historical Site, Georgia; the birth of jazz at New Orleans Jazz National Historical Park, Louisiana; the flowering of a literary giant at the Eugene O'Neill National Historical Site, California; and the artistic grace of a great sculptor's studios at Saint-Gaudens National Historical Site, New Hampshire. Because of the lessons they help us remember, the National Park System also includes the Japanese American World War II internment camp in the desert at Manzanar National Historical Site, California, as well as Andersonville National Historical Site, Georgia, one of the very bleakest of the Civil War prison sites.

Very large numbers of people annually visit the National Park System. According to the National Park Service's 2009 *Statistical Abstract,* there were 285,578,941 visits to the National Park System in 2009. The National Park System offers visitors not only visual, educational, and recreational experiences but also inspirational, contemplative, and spiritual experiences. For neighboring Native Americans, Rainbow Bridge National Monument, Utah, is considered a sacred religious site, such that the Park Service asks visitors to respect these long-standing beliefs by volunteering not to approach or walk under the bridge.

Equally important, the National Park System has traditionally offered visitors the opportunity to engage in demonstration activity and the sale and distribution of printed matter. In that regard, the NPS general regulations found at 36 CFR 2.51 and 2.52, applicable for all parks not subject to 36 CFR 7.96(g), have governed such activities since 1983. Enacted

> * * * to protect the natural and cultural resources of the parks and to protect visitors and property within the parks, [these NPS general regulations] intended effect * * * is to impose on those activities that involve First Amendment consideration only those narrow restrictions that are necessary to protect park resources and to ensure the management of park areas for public enjoyment. (48 FR 30252, 30272)

Among other things, these two NPS regulations required the submission of a permit application for public assemblies and meetings and the sale and distribution of printed materials, established criteria for how parks designate areas available for such activities, established criteria for how the NPS will act on an application including that it do so "without unreasonable delay," provided that parks may impose permit conditions reasonably consistent with protection and use of the park area, imposed a limitation on how long a permit may be issued (although allowing extensions), and provided the grounds for revoking a permit.

On August 6, 2010, the U.S. Court of Appeals for the District of Columbia Circuit issued its decision in *Boardley* v. *Department of the Interior,* No. 09–5176, 2010 U.S. App. LEXIS 16302 (DC Cir. August 6, 2010), which stemmed from a demonstration and leaflet distribution incident at Mount Rushmore National Memorial for which a permit was issued by NPS. Recognizing that no party had proposed to sever the regulations and leave part of them intact, the Court of Appeals held the regulations unconstitutional in their entirety, based on the system-wide lack of an exception from the permit requirement for individual and small group activity in the NPS-designated free speech areas. In an earlier decision, the U.S. District Court for the District of Columbia had found fault with the regulatory definition of a demonstration. Consistent with these judicial decisions, and in order to avoid a regulatory vacuum that could impact the NPS conservation mandate and the use of park areas by the public, the NPS is issuing this interim general rule governing demonstrations and the sale and distribution of printed matter for most of the National Park System. Certain parks in the NPS's National Capital Region are instead subject to special regulations found at 36 CFR 7.96, which were not at issue in the *Boardley* litigation.

While retaining the park superintendent's ability to designate available areas as well as the permit requirement for large groups, the NPS regulatory changes include the following: narrowing the definition of what constitutes a demonstration; creating a small group permit exception; detailing how the NPS is to address small non-permit groups that seek the same park area; refining how applications are to be processed, including that the NPS is to respond within ten days after receipt of a complete and fully executed application; and prohibiting the harassment of visitors by physical touch or by obstruction of building entranceways, sidewalks, and other public passageways. Consistent with evolving First Amendment jurisprudence, the NPS rule is intended to protect the natural and cultural resources of the National Park System and to protect visitors and property within the parks by imposing on these activities only the most limited restrictions necessary to accomplish those goals.

Rule Analysis

Narrowing the Definition of a Demonstration at 36 CFR 2.51

In the first phase of the *Boardley* v. *Department of the Interior* litigation, the District Court held that, because 36 CFR 2.51(a)'s phrase "public expression of views" could apply to visitors just wearing baseball caps, T-shirts or tattoos, it was not narrowly tailored, overbroad, and impermissibly vague. The District Court also indicated that the Director's memorandum dated October 24, 2007, that further defined the phrase, could pose a problem as to the scope of the agency's discretion.

Boardley v. *Department of the Interior* 605 F.Supp.2d 8, 15–16 (D.D.C. 2009).

The NPS has not applied its regulations in an impermissible manner, nor does it have any interest in applying them in an impermissible way. Accordingly the NPS did not appeal the District Court's decision. Instead, the NPS issued a clarifying memorandum dated August 3, 2009, that directed that the terms "public expressions of views" under 36 CFR 2.51 and "demonstrations" under 36 CFR 7.96(g), which have traditionally been used interchangeably, shall both be considered to mean "public assemblies, meetings, gatherings, demonstrations, picketing, speechmaking, marching, holding vigils or religious services engaged in by one or more persons, the conduct of which has the effect or propensity to draw a crowd or onlookers." The memorandum also directed that the terms "do not apply to casual park use by visitors or tourists which does not have an intent or propensity to attract a crowd or onlookers."

Consistent with the District Court's decision regarding what constitutes a demonstration, and the NPS memorandum dated August 3, 2009, this rule more narrowly limits the definition of a demonstration, and makes explicit that the term includes demonstrations, picketing, speechmaking, marching, holding vigils or religious services and all other like forms of conduct which involve the communication or expression of views or grievances, engaged in by one or more persons, the conduct of which is reasonably likely to draw a crowd or onlookers. This rule at 36 CFR 2.51(a) also makes explicit that the term does not include casual park use by visitors or tourists that is not reasonably likely to attract a crowd or onlookers. This language is similar to the definition of a demonstration in the special regulations for the NPS's National Capital Region, 36 CFR 7.96(g)(1)(i), which has been in effect since 1983 and has been implemented without difficulty.

Application of the NPS's narrowed definition of a demonstration thus excludes visitors who merely have tattoos or are wearing baseball caps, T-shirts, or other articles of clothing that convey a message; or visitors whose vehicles merely display bumper stickers. By limiting the definition of what constitutes a demonstration, and by explicitly excluding casual park use by visitors or tourists which is not reasonably likely to attract a crowd or onlookers—such as when scout leaders or teachers engage in discussions with their charges—the NPS believes that the rule comports with the First Amendment and is narrowly tailored to serve significant government interests. Finally, since such demonstrations involve personal expressive activity, and parks are not mere billboard venues, unattended signage or displays continue not to be allowed.

Creating a Small Group Permit Exception at 36 CFR 2.51 and 2.52

In its *Boardley* decision, the Court of Appeals held that the NPS regulations properly were content neutral and did not vest government officials with overly broad discretion, and that a three to ten day deadline for a government official to act on an application was reasonable. However, it held the regulations unconstitutional because they lacked a small group permit exception, on a system-wide basis.

Equally important, the Court of Appeals recognized that the NPS had valid and substantial interests in protecting parks' natural and cultural resources, protecting park facilities from damage, avoiding overcrowding of park locations, minimizing interference with park activities, and preserving peace and tranquility in parks. *Boardley* v. *Department of the Interior,* 2010 U.S. App. LEXIS 16302 *26–27 (DC Cir. August 6, 2010).

Focusing on the "free speech areas" designated by parks under 36 CFR 2.51(e) and 2.52(e), the Court of Appeals determined that the NPS regulations' application to small groups and the lone individual was not sufficiently "narrowly tailored," because most individuals and small groups who engage in free speech do not pose problems, and because the NPS regulations did not leave open ample alternatives for communication. The Court of Appeals suggested that there were other means of achieving its interests, such as promulgating separate regulations for different types of national parks, or prohibiting certain types of public conduct, or drafting distinct regulations for different types of park areas such as wilderness, visitor centers, and parking lots.

The Court of Appeals stated that "it is the prerogative of the agency (or Congress) to decide whether to rewrite the regulations to apply only to large groups, and to decide where to draw that line." *Boardley* v. *Department of the Interior,* 2010 U.S. App. LEXIS 16302 *42–43 (DC Cir. August 6, 2010). Given the NPS's statutory obligations and its important responsibilities to protect and properly manage park resources and protect park visitors, the NPS believes that it is necessary to have regulations that govern demonstrations and the sale or distribution of printed matter. But, consistent with the Court of Appeals' decision as to small groups, the NPS has written this rule so that permits are generally required only of groups that involve more than 25 people. The NPS believes that creating a permit exception for groups of 25 or fewer people engaging in demonstrations or the sale or distribution of printed matter in NPS-designated available areas is reasonable. This is identical to the small group permit exception for groups of 25 or fewer people that has been contained in the NPS's special regulations for the National Capital Region at 36 CFR 7.96(g)(2)(i) since 1983.

Accordingly, under this rule at 36 CFR 2.51(b)(1) and 2.52(b)(1), demonstrations and the sale or the distribution of printed matter by 25 or fewer persons may be conducted without a permit in the available areas designated at 36 CFR 2.51(c).

Pursuant to this rule at 36 CFR 2.51(b)(1)(i)–(ii) and 2.52(b)(1)(i)–(ii), this small group permit exception is contingent upon the other conditions required for the issuance of a permit being met: the group must not be merely an extension of another group already availing itself of the 25-person maximum; and the activity must not unreasonably interfere with other demonstrations, special events, or NPS program activities. This, too, is similar to the NPS's special regulations for the National Capital Region at 36 CFR 7.96(g)(2)(i).

For individuals and small groups who take advantage of the permit exception, this rule provides at 36 CFR 2.51(b)(1)(iii) and 36 CFR 2.52(b)(1)(iii) that their activities may include the use of hand-carried signs, but not stages, platforms, or structures. Small groups have a myriad of other ways to communicate their views, such as discussions, speeches, leaflets, and hand-carried signs. The NPS believes that the unregulated presence of stages, platforms, and structures would negatively impact park resources and park visitors. In those situations, the NPS will continue to require a permit, which allows the park superintendent to consider and assess the nature of the proposed equipment and allows the park to impose content neutral, site-specific and reasonably appropriate park resource and safety conditions.

This rule at 2.51(b)(1)(iv) and 2.52(b)(1)(iv) also requests that the organizer submit reasonable advance notice of the proposed event to the park superintendent, including whether the organizer has reason to believe there may be an attempt to disrupt, protest, or

prevent the event. The advance notice provision is intended to afford at least some opportunity for the park to consider whether additional special public safety and resource protection measures may be needed. Failure to provide advance notice is *not* grounds to prohibit the activity. Advance notice is not a substitute for actual physical presence or a permit, and does not reserve a particular designated area for the organizer. The NPS requests comments as to whether such notice should be made mandatory in future regulations.

Because some park units' designated available areas may be too small to physically accommodate 25 persons, the NPS rule at 36 CFR 2.51(b)(3) and 2.52(b)(3), provides that a park may reduce the 25-person maximum for the small group permit exception for a designated area. This may occur, however, only if a 25-person group cannot be reasonably physically accommodated in the designated area and only if approved by the regional director in writing, which shall be made available at the superintendent's office and by public notice under 36 CFR 1.7.

We also expect that some designated available areas, such as those near a park visitor center, may be very sought-after venues that more than one group may seek to use at the same time. In order to ensure public safety and provide a fair and content-neutral accommodation to such groups, the NPS rule at 36 CFR 2.51(b)(4) and 2.52(b)(4) provides that if two (or more) groups taking advantage of the small group permit exception seek the same designated area at the same time, and the area cannot reasonably accommodate both groups, the park will, whenever possible, direct the later-arriving group to relocate to another nearby available designated area. As discussed above, advance notice will not give a later-arriving group priority over an earlier-arriving group. The rule thus gives activities under permit a preferred right to the designated area, and if the area cannot accommodate two activities, the groups availing themselves of the small group permit exception will, whenever possible, be relocated to a nearby available designated area. For this reason, persons or groups that would otherwise qualify for this exception may wish to apply for and receive a permit in order to ensure that they have priority for use of the designated area.

The NPS's ability to consider the physical dimensions of the designated available areas as well as the safety of the small group and other park visitors is important, especially in the event of a disruptive counter-demonstration. NPS may consider a threat of violence as a permissible ground for a time, place, and manner limitation. "When the choice is between an abbreviated march or a bloodbath, government must have some leeway to make adjustments necessary for the protection of participants, innocent onlookers, and others in the vicinity." *Christian Knights of the Ku Klux Klan Invisible Empire, Inc.* v. *District of Columbia,* 972 F.2d 365, 374 (DC Cir. 1992).

Other Changes in the NPS Rule

This rule at 36 CFR 2.51(d) and 2.52(c) incorporates the various application questions found in the earlier 2.51(b) and 2.52(b), with one additional provision: The application will also ask whether there is any reason to believe that there will be an attempt to disrupt, protest, or prevent the event. Such application information is critical in helping the NPS to assess the need for additional public safety measures as it attempts to facilitate the applicant's activity. It has been a standard question asked in NPS Application Form 10–930 for many years, and the NPS wants to make explicit the importance of obtaining this information.

The rule also provides that applications should not be submitted and will not be accepted more than one year before the proposed event (including set-up time), and that applications submitted earlier will be returned. This is consistent with long-standing NPS administrative practice. As detailed in 73 FR 46217 (2008), this one year time frame allows applicants to be better able to determine the proposed activity's true size and scope, and allows the NPS to be better able to determine whether it can be reasonably accommodated, while also allowing a fair and equal opportunity to use parkland.

This rule has been simplified, with various cross-indexing and subheading captions, so that it may be more understandable. For example, the rule at 36 CFR 2.51(h) and 2.52(g) standardizes the maximum duration of a permit to 14 consecutive days, a change from just 7 days in the prior 36 CFR 2.51(g), but consistent with the prior 36 CFR 2.52(g). The rule still allows a permit to be extended upon submission of a new application.

This rule at 36 CFR 2.51(c)(1)(i)–(v) also consolidates the regulatory criteria earlier found at 2.51(e)(1)–(5) and 2.52(e)(1)–(5), governing when the NPS may determine an area is available for demonstrations and the sale or distribution of printed matter. Parks that authorize special events under 36 CFR 2.50 should consider those special event areas to also be available for demonstrations and the sale and distribution of printed matter.

This rule at 36 CFR 2.51(c)(1)(vi) also creates one additional regulatory criterion for the NPS to consider in deciding which areas to designate as available for demonstrations and the sale or distribution of printed matter: Whether such activities would be incompatible with the nature and traditional use of the particular park area involved. This additional factor is consistent with the Court of Appeals decision in *Boardley,* which stated that:

> Presumably, many national parks include areas—even large areas, such as a vast wilderness preserve—which never have been dedicated to free expression and public assembly, would be clearly incompatible with such use, and would therefore be classified as nonpublic forums. But at the same time, many national parks undoubtedly include areas that meet the definition of traditional public forums.

Boardley v. *Department of the Interior,* 2010 U.S. App. LEXIS 16302 *12–13 (DC Cir. August 6, 2010) (citations omitted). While traditional public forums may exist in some parks, by designating certain areas as available for demonstrations and the sale or distribution of printed matter, NPS does not intend to define those designated available areas as public forums for purposes of First Amendment analysis.

This rule at 36 CFR 2.52(a) also defines what constitutes "printed matter." This definition simply codifies, with minor modifications, a definition already provided in the preamble to the 1983 final regulation. 48 FR 30272 (June 30, 1983).

This rule, at 36 CFR 2.51(e) and 2.52(d), also directs that the superintendent shall issue a permit within ten days of receipt of a fully executed application that includes all of the requested information and is submitted within one year of the proposed event. The text of the earlier NPS regulations required park action "without unreasonable delay," which the NPS later modified to two business days following another Circuit's decision. However, the Court of Appeals in *Boardley* found that the other Circuit's decision was no longer persuasive due to a subsequent Supreme Court decision, and that "it had no trouble finding deadlines between three and ten days to be reasonable." *Boardley* v. *Department of the Interior,* 2010 U.S. App. LEXIS 16302 *23 (DC Cir. August 6, 2010).

Harassment and Obstruction

This rule, at 36 CFR 2.31(a)(4)–(5), also creates two additional public conduct regulations that prohibit harassment and obstruction. The harassment of park visitors with physical contact was earlier prohibited at 36 CFR 2.52(h), and the NPS believes that such public conduct regulations are critical to help protect park resources, programs, and visitors. These regulations are also consistent with the Court of Appeals decision in *Boardley,* which recognized that the government could achieve its legitimate interests by narrowly tailored public conduct regulations: "Instead of subjecting individuals and small groups to a prior restraint on speech, the NPS could simply prohibit and punish conduct that harasses park visitors, interferes with official programs, or creates security or accessibility hazards." *Boardley,* 2010 U.S. App. LEXIS 16302 at *40 (DC Cir. August 6, 2010).

Compliance With Other Laws, Executive Orders, and Department Policy

Effective Date

Pursuant to 5 U.S.C. 553(d)(3) and 318 DM 4.7 B(1)(ii), this rule is effective immediately, so that, following the issuance of the mandate by the Court of Appeals in *Boardley,* the NPS may continue to perform its duties under the NPS Organic Act, consistent with the First Amendment, by properly managing federal parkland while allowing activities associated with demonstrations and the sale and distribution of printed matter.

Regulatory Planning and Review (Executive Order 12866)

This document is a significant rule and the Office of Management and Budget has reviewed this rule under Executive Order 12866. This rule:

(1) Will not have an effect of $100 million or more on the economy. It will not adversely affect in a material way the economy, productivity, competition, jobs, the environment, public health or safety, or State, local, or tribal governments or communities.

(2) Will not create a serious inconsistency or otherwise interfere with an action taken or planned by another agency. The rule only affects management and operations of National Park Service areas outside the National Capital Region.

(3) Does not alter the budgetary effects of entitlements, grants, user fees, or loan programs or the rights or obligations of their recipients.

(4) Does raise novel legal or policy issues. The rule modifies existing NPS regulations to be consistent with recent federal court decisions.

Regulatory Flexibility Act (5 U.S.C. 601 et seq.)

The Department of the Interior certifies that this document will not have a significant economic effect on a substantial number of small entities under the Regulatory Flexibility Act.

The rule expands opportunities for individuals and organizations to engage in small group demonstrations and the sale or distribution of printed matter for which no permit need be issued. Other organizations with interest in the rule will not be effected economically.

Small Business Regulatory Enforcement Fairness Act (5 U.S.C. 804 (2))

This rule is not a major rule under the Small Business Regulatory Enforcement Fairness Act. This rule:

a. Does not have an annual effect on the economy of $100 million or more.

b. Will not cause a major increase in costs or prices for consumers, individual industries, Federal, State, or local government agencies, or geographic regions.

c. Does not have significant adverse effects on competition, employment, investment, productivity, innovation, or the ability of U.S.-based enterprises to compete with foreign-based enterprises.

Unfunded Mandates Reform Act (2 U.S.C. 1531 et seq.)

This rule does not impose an unfunded mandate on State, local, or tribal governments or the private sector of more than $100 million per year. The rule does not have a significant or unique effect on State, local, or tribal governments or the private sector. A statement containing the information required by the Unfunded Mandates Reform Act is not required.

Takings (Executive Order 12630)

Under the criteria in Executive Order 12630, this rule does not have significant takings implications. It pertains specifically to operation and management of locations outside the NPS–National Capital Region. A takings implication assessment is not required.

Federalism (Executive Order 13132)

In accordance with Executive Order 13132, the rule does not have sufficient federalism implications to warrant the preparation of summary impact statement. A Federalism summary impact statement is not required.

Civil Justice Reform (Executive Order 12988)

This rule complies with the requirements of Executive Order 12988. Specifically, this rule:

(a) Meets the criteria of section 3(a) requiring that all regulations be reviewed to eliminate errors and ambiguity and be written to minimize litigation; and

(b) Meets the criteria of section 3(b)(2) requiring that all regulations be written in clear language and contain clear legal standards.

Consultation With Indian tribes (Executive Order 13175)

Under the criteria in Executive Order 13175, we have evaluated this rule and determined that it has no potential effects on federally recognized Indian tribes. The rule only applies to management and operation of NPS areas outside the National Capital Region.

Paperwork Reduction Act

The Office of Management and Budget has approved the information collections in this rule and has assigned control number 1024–0026 expiring on June 30, 2013. The information collection activities are necessary for the public to obtain benefits in the form of special park use permits.

National Environmental Policy Act of 1969

This rule does not constitute a major Federal action significantly affecting the quality of the human environment. It is a modification of existing NPS regulations as required by a decision of the Court of Appeals. Moreover, a detailed statement under the National Environmental Policy Act of 1969 (NEPA) is not required because the rule is covered by a categorical exclusion. We have determined that the proposed rule is categorically excluded under 516 DM 12.5(A)(10) as it is a modification of existing NPS regulations that does not increase public use to the extent of compromising the nature and character of the area or causing physical damage to it. Further, the rule will not result in the introduction of incompatible uses which might compromise the nature and characteristics of the area or cause physical damage to it. Finally, the rule will not cause conflict with adjacent ownerships or land uses, or cause a nuisance to adjacent owners or occupants.

We have also determined that the rule does not involve any of the extraordinary circumstances listed in 43 CFR 46.215 that would require further analysis under NEPA.

Information Quality Act (Pub. L. 106–554)

In developing this rule we did not conduct or use a study, experiment, or survey requiring peer review under the Information Quality Act.

Effects on the Energy Supply (Executive Order 13211)

This rule is not a significant energy action under the definition in Executive Order 13211. A Statement of Energy Effects is not required.

Clarity of This Regulation

We are required by Executive Orders 12866 and 12988 and by the Presidential Memorandum of June 1, 1998, to write all rules in plain language. This means that each rule we publish must:

(a) Be logically organized;

(b) Use the active voice to address readers directly;

(c) Use clear language rather than jargon;

(d) Be divided into short sections and sentences; and

(e) Use lists and tables wherever possible.

If you feel that we have not met these requirements, send us comments by one of the methods listed in the **ADDRESSES** section. To help us better revise the rule, your comments should be as specific as possible. For example, you should tell us the numbers of the sections or paragraphs that are unclearly written, which sections or sentences are too long, the sections where you feel lists or tables would be useful, etc.

Public Participation

Pursuant to 5 U.S.C. 553, good cause exists both to publish this interim rule without prior public notice and comment and for this rule to become effective immediately, following the issuance of the mandate by the Court of Appeals in *Boardley* v. *Department of the Interior.* This allows the NPS to continue to perform its duties under the NPS Organic Act, consistent with the First Amendment: to properly manage federal parkland while allowing activities associated with demonstrations and the sale and distribution of printed matter. As explained above, the Court of Appeals found that the rules at 2.51 and 2.52 were unconstitutional in their entirety. Thus, to ensure that no regulatory vacuum exists, it is necessary to promulgate these rules without advance notice and comment, and it would be impracticable and contrary to the public interest to delay their effective date. And as explained above, these changes adopt some provisions already included within the special regulations for the NPS's National Capital Region, which were the result of notice and comment rulemakings. Although the interim rule is effective immediately, NPS still requests public comments on this rule. Comments will be accepted for 60 days. NPS will review all comments received, and at the conclusion of the comment period will determine whether revisions to this interim rule are warranted.

All submissions must include the agency name and docket number or Regulatory Information Number (RIN) for this rulemaking. All comments received will be posted without change to *http://www.regulations.gov.*

Docket: For access to the docket to read background documents or comments received, go to *http://www.regulations.gov* and enter "1024–ADXX" in the "Keyword or ID" search box.

Public Availability of Comments

Before including your address, phone number, e-mail address, or other personal identifying information in your comment, you should be aware that your entire comment including your personal identifying information may be made publicly available at any time. While you can ask us in your comment to withhold your personal identifying information from public review, we cannot guarantee that we will be able to do so.

List of Subjects in 36 CFR Part 2

Environmental protection, National parks, Reporting and recordkeeping requirements.

■ In consideration of the foregoing, the National Park Service amends 36 CFR part 2 as set forth below:

PART 2—RESOURCE PROTECTION, PUBLIC USE AND RECREATION

■ 1. The authority citation for part 2 continues to read as follows:

Authority: 16 U.S.C. 1, 3, 9a, 462(k).

■ 2. In § 2.31 add paragraphs (a)(4) and (a)(5), to read as follows:

§ 2.31 Trespassing, tampering, vandalism, harassment, obstruction.

(a) * * *

(4) *Harassment.* Intentional or reckless harassment of park visitors with physical contact.

(5) *Obstruction.* Intentional or reckless obstruction of any sidewalk, trail, highway, building entranceway, railroad track, or public utility right-of-way, or other public passage, whether alone or with others. The mere gathering of persons to hear a speaker communicate, or simply being a member of such a gathering, does not constitute obstruction. An official may make a reasonable request or order that one or more persons move in order to prevent obstruction of a public passage, and refusal of such an order constitutes obstruction.

* * * * *

■ 3. Section 2.51 is revised to read as follows:

§ 2.51 Demonstrations.

(a) *Demonstrations.* The term "demonstrations" includes demonstrations, picketing, speechmaking, marching, holding vigils or religious services, and all other like forms of conduct that involve the communication or expression of views or grievances, engaged in by one or more persons, the conduct of which is reasonably likely to attract a crowd or onlookers. This term does not include casual park use by visitors or tourists that is not reasonably likely to attract a crowd or onlookers.

(b) *Permits and the small group permit exception.* Demonstrations are allowed within park areas designated as available under paragraph (c)(2) of this section, when the superintendent has issued a permit for the activity, except that:

(1) Demonstrations involving 25 persons or fewer may be held without a permit within designated park areas, provided that:

(i) None of the reasons for denying a permit that are set out in paragraph (f) of this section are present;

(ii) The group is not merely an extension of another group already availing itself of the small group permit exception under this provision;

(iii) They will not unreasonably interfere with other permitted demonstrations and special events, or park program activities; and

(iv) Hand-carried signs may be used, but stages, platforms, or structures may not be used.

(2) While it is not mandatory, the organizer is requested to provide reasonable notice of the proposed event to the park superintendent, including whether there is any reason to believe that there may be an attempt to disrupt, protest, or prevent the activity.

(3) The 25-person maximum for the small group permit exception may be reduced for a designated available area, but only if:

(i) A written determination that a 25-person group cannot be reasonably physically accommodated within that area is approved by the regional director; and

(ii) The written determination is made available at the office of the

superintendent and by public notice under § 1.7 of this chapter.

(4) In the event that two or more groups taking advantage of the small group permit exception seek to use the same designated available area at the same time, and the area cannot reasonably accommodate multiple occupancy, the superintendent will, whenever possible, direct the later-arriving group to relocate to another nearby designated available area.

(c) *Designated available park areas.* (1) Locations may be designated as available for demonstrations under this section, and for the sale or distribution of printed matter under § 2.52, only if these activities would not:

(i) Cause injury or damage to park resources;

(ii) Unreasonably impair the atmosphere of peace and tranquility maintained in wilderness, natural, historic, or commemorative zones;

(iii) Unreasonably interfere with interpretive, visitor service, or other program activities, or with the administrative activities of the National Park Service;

(iv) Substantially impair the operation of public use facilities or services of National Park Service concessioners, holders of commercial use authorizations, or contractors;

(v) Present a clear and present danger to the public health and safety; or

(vi) Be incompatible with the nature and traditional use of the particular park area involved.

(2) The superintendent must designate on a map, which must be available in the office of the superintendent and by public notice under § 1.7 of this chapter, the locations designated as available for demonstrations and the sale or distribution of printed matter.

(d) *Application for permit.* A permit application must provide:

(1) The name of the applicant or the name of the organization (if any);

(2) The date, time, duration, nature, and place of the proposed event;

(3) An estimate of the number of persons expected to attend;

(4) A statement of equipment and facilities to be used;

(5) Whether there is any reason to believe that there will be an attempt to disrupt, protest, or prevent the event; and

(6) Any other information required by the permit application form.

(e) The superintendant must not accept an application more than one year before the proposed event (including time required for set-up); applications received more than a year in advance will be returned to the applicant.

(f) *Processing the application.* The superintendent must issue a permit within ten days of receiving a complete and fully executed application unless:

(1) The superintendant has granted or will grant a prior application for a permit for the same time and place, and the activities authorized by that permit do not reasonably allow multiple occupancy of that particular area;

(2) It reasonably appears that the event will present a clear and present danger to public health or safety;

(3) The event is of such nature or duration that it cannot reasonably be accommodated in the particular location applied for, considering such things as damage to park resources or facilities, impairment of a protected area's atmosphere of peace and tranquility, interference with program activities, or impairment of public use facilities;

(4) The location applied for has not been designated as available under paragraph (c)(2) of this section;

(5) The application was submitted more than one year before the proposed event (including set-up); or

(6) The activity would constitute a violation of an applicable law or regulation.

(g) *Written denial of permit.* If a permit is denied, the superintendant will inform the applicant in writing of the denial and the reasons for it.

(h) *Permit conditions.* The permit may contain conditions reasonably consistent with the requirements of public health and safety, protection of park resources, and the use of the park area for the purposes for which it was established. It may also contain reasonable limitations on the equipment used and the time and area within which the event is allowed.

(i) *Permit duration.* (1) Permits may be issued for a maximum of 14 consecutive days.

(2) A permit may be extended for up to 14 days, but a new application must be submitted for each extension requested.

(3) The extension may be denied if another applicant has requested use of the same location and the location cannot reasonably accommodate multiple occupancy.

(j) *Violation prohibited.* Violation of these regulations or the terms of the permit is prohibited.

(k) *Permit revocation, termination of small group exception.* (1) The superintendent may revoke a permit for any violation of its terms and conditions.

(2) The superintendent may revoke a permit, or order a small group permit exception activity to cease, when any of the conditions listed in paragraph (f) of this section exist.

(3) The superintendent will make the revocation or order to cease in writing, with the reasons clearly set forth. In emergency circumstances the superintendent will make an immediate verbal revocation or order to cease, followed by written confirmation within 72 hours.

■ 4. Section 2.52 is revised to read as follows:

§ 2.52 Sale or distribution of printed matter.

(a) *Printed Matter.* The term "printed matter" means message-bearing textual printed material such as books, pamphlets, magazines, and leaflets, provided that it is not solely commercial advertising.

(b) *Permits and the small group permit exception.* The sale or distribution of printed matter is allowed within park areas designated as available under § 2.51(c)(2) when the superintendent has issued a permit for the activity, except that:

(1) Sale or distribution activity by 25 persons or fewer may be conducted without a permit within designated park areas, provided that:

(i) None of the reasons for denying a permit that are set out in paragraph (e) of this section are present; and

(ii) The group is not merely an extension of another group already availing itself of the small group permit exception under this provision;

(iii) The sale or distribution will not unreasonably interfere with other permitted demonstrations and special events, or program activities; and

(iv) Hand-carried signs may be used, but stages, platforms, or structures may not be used.

(2) While it is not mandatory, the organizer is requested to provide reasonable notice of the proposed event to the park superintendent, including whether there is any reason to believe that there may be an attempt to disrupt, protest, or prevent the activity.

(3) The 25-person maximum for the small group permit exception may be reduced for a designated available area, but only if:

(i) A written determination that a 25-person group cannot be reasonably physically accommodated within that area is approved by the regional director; and

(ii) The written determination is made available at the office of the superintendent and by public notice under § 1.7 of this chapter.

(4) In the event that two or more groups taking advantage of the small-group permit exception seek the same

designated available area at the same time, and the area cannot reasonably accommodate multiple occupancy, the superintendent will, whenever possible, direct the later-arriving group to relocate to another nearby designated available area.

(c) *Application for permit.* An application must provide:

(1) The name of the applicant or the name of the organization (if any);

(2) The date, time, duration, nature, and place of the proposed event;

(3) An estimate of the number of persons expected to attend;

(4) A statement of equipment and facilities to be used;

(5) Whether there is any reason to believe that there will be an attempt to disrupt, protest, or prevent the event; and

(6) Any other information required by the permit application form.

(d) The superintendant must not accept an application more than one year before the proposed event (including time required for set-up); applications received more than a year in advance will be returned to the applicant.

(e) *Processing the application.* The superintendent must issue a permit within ten days of receiving a complete and fully executed application unless:

(1) The superintendant has granted or will grant a prior application for a permit for the same time and place, and the activities authorized by that permit do not reasonably allow multiple occupancy of the particular area;

(2) It reasonably appears that the sale or distribution will present a clear and present danger to the public health and safety;

(3) The number of persons engaged in the sale or distribution exceeds the number that can reasonably be accommodated in the particular location applied for, considering such things as damage to park resources or facilities, impairment of a protected area's atmosphere of peace and tranquility, interference with program activities, or impairment of public use facilities;

(4) The location applied for has not been designated as available under § 2.51(c)(2);

(5) The application was submitted more than one year before the proposed event (including set-up); or

(6) The activity would constitute a violation of an applicable law or regulation.

(f) *Written denial of permit.* If a permit is denied, the superintendant will inform the applicant in writing of the denial and the reasons for it.

(g) *Permit conditions.* The permit may contain conditions reasonably consistent with the requirements of public health and safety, protection of park resources, and the use of the park area for the purposes for which it was established.

(h) *Permit duration.* (1) Permits may be issued for a maximum of 14 consecutive days.

(2) A permit may be extended for up to 14 days, but a new application must be submitted for each extension requested.

(3) The extension may be denied if another applicant has requested use of the same location and the location cannot reasonably accommodate multiple occupancy.

(i) *Misrepresentation.* It is prohibited for persons engaged in the sale or distribution of printed matter under this section to misrepresent the purposes or affiliations of those engaged in the sale or distribution, or to misrepresent whether the printed matter is available without cost or donation.

(j) *Violation prohibited.* Violation of these regulations or the terms of the permit is prohibited.

(k) *Permit revocation, termination of small group exception.* (1) The superintendent may revoke a permit for any violation of its terms and conditions.

(2) The superintendent may revoke a permit, or order a small group permit exception activity to cease, when any of the conditions listed in paragraph (e) of this section exist.

(3) The superintendent will make the revocation or order to cease in writing, with the reasons clearly set forth. In emergency circumstances the superintendent will make an immediate verbal revocation or order to cease, followed by written confirmation within 72 hours.

Dated: October 1, 2010.

Will Shafroth,

Assistant Secretary for Fish and Wildlife and Parks.

[FR Doc. 2010–26392 Filed 10–15–10; 4:15 pm]

BILLING CODE 4312–52–P

ENVIRONMENTAL PROTECTION AGENCY

40 CFR Part 52

[EPA–R05–OAR–2007–0587; EPA–R05–OAR–2009–0732; FRL–9205–8]

Approval of Implementation Plans of Wisconsin: Nitrogen Oxides Reasonably Available Control Technology

AGENCY: Environmental Protection Agency (EPA).

ACTION: Final rule.

SUMMARY: EPA is approving revisions to the Wisconsin State Implementation Plan (SIP) submitted on June 12, 2007 and on September 14, 2009. These revisions incorporate provisions related to the implementation of nitrogen oxides (NO_X) Reasonably Available Control Technology (RACT) for major sources in the Milwaukee-Racine and Sheboygan County ozone nonattainment areas. EPA is approving SIP revisions that address the NO_X RACT requirements found in the Clean Air Act (CAA). EPA is also approving other miscellaneous rule changes that affect NO_X regulations that were previously adopted and approved into the SIP.

DATES: This final rule is effective November 18, 2010.

ADDRESSES: EPA has established the following dockets for this action: Docket ID Nos. EPA–R05–OAR–2007–0587 and EPA–R05–OAR–2009–0732. All documents in the docket are listed on the *http://www.regulations.gov* Web site. Although listed in the index, some information is not publicly available, *i.e.,* Confidential Business Information (CBI) or other information whose disclosure is restricted by statute. Certain other material, such as copyrighted material, is not placed on the Internet and will be publicly available only in hard copy form. Publicly available docket materials are available either electronically in *http://www.regulations.gov* or in hard copy at the Environmental Protection Agency, Region 5, Air and Radiation Division, 77 West Jackson Boulevard, Chicago, Illinois 60604. This facility is open from 8:30 a.m. to 4:30 p.m., Monday through Friday, excluding federal holidays. We recommend that you telephone Douglas Aburano, Environmental Engineer, at (312) 353–6960, before visiting the Region 5 office.

FOR FURTHER INFORMATION CONTACT: Douglas Aburano, Environmental Engineer, Attainment Planning and Maintenance Section, Air Programs Branch (AR–18J), Environmental Protection Agency, Region 5, 77 West Jackson Boulevard, Chicago, Illinois 60604, (312) 353–6960, *aburano.douglas@epa.gov.*

SUPPLEMENTARY INFORMATION: Throughout this document whenever "we," "us," or "our" is used, we mean EPA. This supplementary information section is arranged as follows:

Table of Contents

I. What is the background for this rule?
II. What comments did we receive on the proposed rule?

III. What actions is EPA taking?
IV. Statutory and Executive Order Reviews

I. What is the background for this rule?

The CAA amendments of 1990 introduced the requirement for existing major stationary sources of NO_X in nonattainment areas that are classified as moderate or above to install and operate NO_X RACT. Specifically, section 182(b)(2) of the CAA requires states to adopt RACT for all major sources of VOC in ozone nonattainment areas classified as moderate or above, and section 182(f) requires that the RACT provisions for VOC also apply to major stationary sources of NO_X. "RACT" is defined as the lowest emission limitation that a particular source is capable of meeting by the application of control technology that is reasonably available considering technological and economic feasibility (44 FR 53762).

Section 302 of the CAA defines a major stationary source as any facility which has the potential to emit 100 tons per year of any air pollutant. For serious ozone nonattainment areas, a major source is defined by section 182(c) as a source that has the potential to emit 50 tons of NO_X per year. For severe ozone nonattainment areas, a major source is defined by section 182(d) as a source that has the potential to emit 25 tons per year.

The requirements for NO_X RACT can be waived under section 182(f) of the CAA. See EPA memorandum dated December 16, 1993, from John Seitz, Director, Office of Air Quality Planning and Standards to Air Division Directors entitled, "Guideline for Determining the Applicability of Nitrogen Oxide Requirements Under Section 182(f)." Waivers can be granted if the Administrator determines that any one of the following tests is met:

1. In any area, the net air quality benefits are greater in the absence of NO_X reductions from the sources concerned;
2. In nonattainment areas not within an ozone transport region, additional NO_X reductions would not contribute to ozone attainment in the area; or
3. In nonattainment areas within an ozone transport region, additional NO_X reductions would not produce net ozone air quality benefits in the transport region.

Wisconsin received a NO_X RACT waiver under the 1-hour ozone standard on January 26, 1996 and, therefore, was not required to adopt NO_X RACT regulations for that standard. However, there are areas in Wisconsin that are nonattainment for the 1997 8-hour ozone standard. These areas were designated nonattainment on June 15, 2004 (69 FR 23947). Because Wisconsin does not have a waiver for the NO_X requirements for the 1997 8-hour ozone standard, NO_X RACT rules are required in the areas that are classified as moderate or above.

Since the only areas in Wisconsin that are required to adopt NO_X RACT are classified as moderate for the 1997 8-hour ozone standard, the rules that have been adopted only need to address sources with the potential to emit 100 tons per year. The NO_X RACT rules were to have been submitted by September 15, 2006.

On June 12, 2007, Wisconsin submitted rules and supporting material for addressing the NO_X RACT requirements. The Wisconsin Department of Natural Resources (WDNR) held a public hearing for these rules on March 15, 2007. WDNR also provided a comment period that was announced on February 2, 2007, and ended on March 19, 2007.

On September 14, 2009, Wisconsin submitted a supplemental SIP revision and additional supporting material for addressing the NO_X RACT requirements. WDNR held a public hearing for these rules on December 5, 2008, and also provided a comment period that was announced on October 30, 2008, and ended on December 10, 2008.

On March 24, 2010, EPA proposed to approve Wisconsin's submittals as meeting the section 182(f) requirements for NO_X RACT. 75 FR 14116. In the same action, EPA also proposed to approve other non-RACT NO_X rules that Wisconsin submitted for approval into the SIP. These non-RACT rules that Wisconsin submitted for approval were primarily miscellaneous changes to the NO_X rules that were approved into the SIP to meet Reasonable Further Progress requirements for the 1990 1-hour ozone standard. The primary background for today's actions is contained in EPA's March 24, 2010, proposal to approve Wisconsin's NO_X RACT submittal.

II. What comments did we receive on the proposed rule?

EPA provided a 30-day review and comment period. The comment period closed on April 12, 2010. During the comment period, we received comments from three individuals. These comments are summarized and addressed below.

Comment 1

A commenter notes that the correct reference in the Wisconsin Administrative Code for the "Clean Air Interstate Rule (CAIR) equals RACT" provision is not 428.25(3), as identified in the proposal to approve the Wisconsin NO_X RACT rules published on March 24, 2010 (75 FR 14116), but rather it is 428.25(2).

Response 1

EPA recognizes this typographical error and will correct the reference in this final approval. EPA is, however, not rulemaking on the CAIR equals RACT provisions at this time. See discussion under Comment 2.

Comment 2

A commenter claims that the EPA's CAIR equals RACT determination found in the "Phase 2 of the Final Rule To Implement the 8-Hour Ozone National Ambient Air Quality Standard—Notice of Reconsideration" (72 FR 31730), "is not mere "guidance"; it was and is a rule that is binding on EPA." The commenter goes on to state that, "The D.C. Circuit's remand of CAIR did nothing to impair the continued applicability of the CAIR=RACT rule."

The commenter, therefore, opposes EPA's decision to not rulemake on Wisconsin's rule 428.25(2) and suggests that EPA should instead promptly approve that provision as part of Wisconsin's NO_X RACT SIP.

Response 2

The D.C. Circuit remanded CAIR to EPA and, because there is uncertainty regarding the rule that will replace CAIR, it is not appropriate to move forward with the approval of this portion of Wisconsin's NO_X RACT rule. We should, however, point out that this is not a disapproval of rule 428.25(2). We are merely deferring making a decision now and will revisit rule 428.25(2) once EPA promulgates a rule that replaces CAIR.

On July 6, 2010, EPA Administrator Lisa P. Jackson signed a proposed replacement rule for CAIR. In the event that this CAIR replacement rule is finalized, Wisconsin's rule 428.25(2) must reference and conform to the new rule.

Comment 3

The commenter asserts that EPA has a well-known and longstanding definition of RACT, citing various **Federal Registers** and a memorandum from Roger Stelow, Assistant Administrator of Air and Waste Management, United States Environmental Protection Agency, to Regional Administrators (December 9, 1979). The definition of RACT that the commenter cites is, "the lowest emission limitation that *a particular source* is capable of meeting by the application of control technology that is reasonably available considering technological and

economic feasibility." (emphasis added). The commenter uses this point as the basis for stating that, "RACT must apply to each individual source, based on the technological feasibility and cost of control at that source."

Response 3

While we do not disagree with the cited definition of RACT, we do not view RACT as a program that should necessarily be evaluated on a facility-by-facility basis. The Nitrogen Oxides Supplement to the General Preamble for the Implementation of Title I of the Clean Air Act Amendments of 1990 speaks to this very issue. *See* section 4.2 *General Definition of RACT* (57 FR 55624):

> The EPA has defined RACT as the lowest emission limitation that a particular source is capable of meeting by the application of control technology that is reasonably available considering technological and economic feasibility (44 FR 53762; September 17, 1979). Although EPA has historically recommended source-category-wide presumptive RACT limits, and plans to continue that practice, decisions on RACT may be made on a case-by-case basis* * *

The emission limits found in Wisconsin's rule NR 428.22 "Emission limitation requirements" are source-category wide limits that EPA has traditionally accepted and approved, and there is no requirement for RACT to be evaluated on a facility-by-facility basis other than as an exception to the general rule.

Comment 4

The commenter points out that, "RACT must be applied to sources within the non-attainment area."

Response 4

We agree with this comment and we would respond that the RACT requirements apply in the nonattainment area.

Comment 5

The commenter states that, "Other states are also requiring much lower emission rates than proposed in DNR's draft rule. For example, Texas adopted rules in 2001 that require coal-fired power plants to achieve the following emission rates:

- 0.033 lb/MMBtu in the Dallas/Ft. Worth area on a 24-hour average.
- 0.050 lb/MMBtu on a 30-day average for wall fired units in the Houston/Galveston area.
- 0.045 lb/MMBtu on a 30-day average for tangential-fired units.

30 Tex. Admin. Code Section 117.106."

Response 5

We do not dispute that these limits are lower than the 0.10–0.18 lb/mmBtu limits on a 30-day average for coal-fired units that Wisconsin has adopted. It should, however, be recognized that Texas adopted these NO_X limits for attainment purposes. Reductions necessary for attainment will vary from nonattainment area to nonattainment area and will often require greater reductions than RACT level reductions. Texas recognizes that the limits the commenter pointed to are more stringent than RACT levels. The rule immediately preceding the citation provided by the commenter, 30 Tex. Admin. Code Code Section 117.105, "Emission Specifications for Reasonably Available Control Technology (RACT)," contains Texas' emission limits adopted to meet RACT. The RACT limits adopted by Texas for coal-fired units are in the 0.38–0.43 lb/mmBtu range on a 24-hour rolling average basis. While not directly comparable to the Wisconsin limits, because of the difference in averaging time, the Texas RACT limits are clearly much less stringent than the Texas limits the commenter pointed to which have been adopted for attainment purposes.

RACT limits are not meant to be the lowest achievable emission rates. The Nitrogen Oxides Supplement to the General Preamble for the Implementation of Title I of the Clean Air Act Amendments of 1990 addresses the issue of an acceptable emission limit. *See* section 4.6 *RACT for Certain Electric Utility Boilers* (57 FR 55626), "The EPA expects States, to the extent practicable, to demonstrate that the variety of emission controls adopted are consistent with the most effective level of combustion modification reasonably available for its individual affected sources." Presumptive limits (emission rates expressed in a lb/mm Btu basis) were listed for various utility boilers in this section:

- 0.45 for tangentially fired, coal burning,
- 0.50 for dry bottom wall fired (other than cell burner), coal burning,
- 0.20 for tangentially fired, gas/oil burning, and
- 0.30 for wall fired, gas/oil burning.

These limits were based on combustion modifications, the control technology that was deemed reasonably available at the time. Add-on controls like selective catalytic reduction (SCR) and selective non-catalytic reduction (SNCR) capable of achieving greater NO_X reductions than the presumptive NO_X limits were also evaluated but EPA chose to not base the presumptive limits on these controls and EPA chose to not set the limits at a lower point at that time.

To take into account the time that has passed since EPA set presumptive NO_X RACT limits for utility coal-fired boilers and other NO_X RACT technology guidance documents EPA issued in the mid-1990s, Wisconsin evaluated various control technologies on a source category-by-source category basis to determine what control level and emission limits are reasonably available today. Wisconsin re-evaluated coal-fired boiler limits and generally found that emission limits based on add-on control technology like selective catalytic reduction and selective non-catalytic reduction are now reasonably available. While Wisconsin did not adopt limits based on the lowest achievable emission rates based on these technologies, Wisconsin did adopt limits considered to be reasonably available based on capabilities and problems that are general to utility coal-fired boilers in Wisconsin.

Wisconsin also evaluated the cost-effectiveness of the control technologies on which the NO_X RACT limits were based. As described in the March 16, 1994, memorandum, "Cost-Effective Nitrogen Oxides (NO_X) Reasonably Available Control Technology (RACT)" from E. Kent Berry, Acting Director of EPA's Air Quality Management Division, "NO_X technologies with a cost-effectiveness range that overlaps the $160 to $1,300 range should, at minimum, be considered by States in the development of their NO_X RACT requirements." WDNR took the $1,300/ton figure and grew this out to the 2005 equivalent of roughly $2,000/ton using the consumer price index. WDNR took the additional step to increase the reasonable cost-effectiveness of controls upwards to $2,500/ton for evaluating RACT based on several considerations. The WDNR found $2,500/ton to be consistent with costs considered under NO_X RACT programs in other states including the NO_X RACT developed by Illinois concurrently with the Wisconsin rules. The WDNR also found $2,500/ton cost-effectiveness to encompass top-tier NO_X controls of selective catalytic reduction for most coal fire boilers, which is the largest source category of NO_X emissions affected by the rules. Applying this level of cost-effectiveness across the other affected source categories achieves comparability of RACT controls in a manner consistent with the 1994 memorandum.

In its evaluation of RACT for sources in Wisconsin, WDNR examined various control technologies that can reduce NO_X emissions and determined what is

reasonably achievable given the availability of these technologies, the type of source, the level of control that is generally achievable, and the costs associated with achieving the reductions associated with the technology.

EPA reviewed the method used by Wisconsin to update RACT limits for the 1997 8-hour ozone standard and found it to be appropriate. Therefore, EPA is approving the NO_X RACT limits adopted by Wisconsin.

Comment 6

The commenter indicates that SCR is capable of achieving emissions reductions from coal-fired power plants. Therefore, NO_X RACT emission rates should be lower than the limits adopted in Wisconsin's NO_X RACT rules.

Response 6

We do not dispute the fact that SCR is capable of achieving NO_X emission rates lower than the NO_X RACT limits adopted by Wisconsin. The question is whether or not Wisconsin appropriately evaluated emission limits and the costs associated with such controls on the affected facilities and arrived at limits suitable for NO_X RACT. We believe Wisconsin referred to the appropriate EPA guidance and set the limits in accordance with this guidance. *See* response to Comment 5 above.

Comment 7

The commenter suggests that the compliance margin used by Wisconsin should not have been used to calculate the emission limits for the sources subject to the NO_X RACT rules. The commenter states that, "There are two reasons that the compliance margin is unnecessary. First, there is a compliance margin built in to the existing rate limitations. By assuming a lower than 90% emissions control efficiency (some as low as 46%) for SCR technology, the rule already provides significant leeway for achieving a cost-effective emission rate * * * Second, the multi-unit and multi-facility averaging provided for in the Rule provides an additional cushion for facilities that are unable to meet the emission limitations."

Response 7

Wisconsin has adopted definitive NO_X limits for the various types of electric generating units in the nonattainment area. In its evaluation of the adopted limits, the State followed the applicable EPA guidance. *See* Response 5. The limits that the State has adopted are at an acceptable level.

Comment 8

The commenter states that, "RACT is a measure intended to improve local air quality * * * Thus, each plant affected by RACT must be required to reduce pollution locally, and may not be allowed to trade in pollution reductions in other areas to justify continued high emission by certain plants."

Response 8

We agree that NO_X RACT is a measure intended to improve local air quality (*i.e.,* the air quality within the nonattainment areas). We do not agree that sources subject to Wisconsin's NO_X RACT rules should not be allowed to comply through an averaging program within the nonattainment areas. Wisconsin's NO_X RACT averaging provisions do not allow sources outside of the moderate nonattainment areas to participate in this averaging program. This ensures that the reductions of NO_X will occur in the nonattainment areas where these reductions are needed.

The Nitrogen Oxides Supplement to the General Preamble for the Implementation of Title I of the Clean Air Act Amendments of 1990 clearly anticipates and even encourages states to adopt averaging plans as a compliance option. *See* section 4.6 *RACT for Certain Electric Utility Boilers:* "EPA believes that the above emission rates are appropriate for application to groups of boil[ers] on an areawide average, Btu-weighted basis" and "* * * EPA encourages States to structure their RACT requirements to inherently incorporate an emissions averaging concept (*i.e.,* installing more stringent controls on some units in exchange for lesser controls on others). Therefore, in the interest of simplifying State RACT determinations and enhancing the ability of States to adopt market-based trading systems for NO_X, the State may allow individual owners/operators in the nonattainment area (or, alternatively, Statewide within an ozone transport region) to have emission limits which result in greater or lesser emission reductions so long as the areawide emission rates described above are met on a Btu-weighted basis." *See* 57 FR 55625. Allowing emissions averaging to meet the NO_X RACT rules makes sense for reducing ozone in the nonattainment area in a cost-effective way without compromising the environmental benefit of these reductions. Moreover, Wisconsin has enhanced the environmental benefit of the State's NO_X RACT rules by requiring an additional 10% reduction of emissions from those sources that are complying with the NO_X RACT requirements by using the multi-facility averaging compliance provisions.

Comment 9

The commenter also states that multi-facility averaging threatens environmental justice. The commenter points out that NO_X is a precursor not only to ozone but to fine particulates ($PM_{2.5}$) and that EPA has recently promulgated a new NO_2 standard. The commenter adds that because of the multi-facility averaging provisions, Wisconsin Energy is allowed to put greater controls on its Pleasant Prairie facility, located in Kenosha County, that will, in effect, reduce the need for additional reductions at its Valley Plant located in downtown Milwaukee where, the commenter asserts, greater environmental protection is warranted.

Response 9

The commenter states that the Valley Power Plant is located in the City of Milwaukee and that, because of compliance options in the rule that allow multi-facility averaging, the Valley Power Plant has the option of averaging its emission with other power plants that would make more significant reductions of NO_X.

Emissions from the Valley Power Plant do not impact any community greater than any other power plants affected by this rule. The compliance option allowing emissions averaging does not disproportionately impact any group of people in any area. The rule is required to reduce ozone precursors and the rule accomplishes this. Everyone in the Milwaukee-Racine and Sheboygan nonattainment areas, as well as downwind areas, will be breathing cleaner air because of the NO_X reductions required by this rule. The compliance option of multi-facility averaging allows companies to make reductions within their own fleet of facilities, which would result in lower emissions than simply complying with the general provisions of the rule to meet the NO_X RACT requirements (*See* response to Comment 8), due to the additional 10% emissions reduction requirement for facilities using the multi-facility averaging provisions as the compliance option. There will be no increases of emissions from the Valley Power Plant, which seems to be of particular concern to the commenter. The facility has, in fact, seen emissions reductions from new combustion modifications that have been installed as a result of this rule.

Other than the fact that add-on controls are being placed on the Pleasant Prairie Power Plant that are not being placed on the Valley Power Plant,

it is unclear why the commenter believes there is a case of environmental injustice. Table 1 shows the ozone design values for various monitors in the southeast portion of Wisconsin. All of the monitors are meeting the 1997 8-hour ozone standard of 0.08 ppm. In fact, all of the monitors in Wisconsin are currently meeting the 1997 8-hour ozone standard. The monitor that is closest to the Valley Plant, the 16th St. Health Center monitor, has the lowest monitored ozone values in the southeast Wisconsin area. It is roughly 1.1 miles to the south-southwest of the Valley Plant, the plant of greatest concern to the commenter. For comparison, the monitor closest to the Pleasant Prairie Plant has the highest values recorded in the southeast Wisconsin area. The monitoring data do not indicate that ozone is a problem in the immediate vicinity of the Valley Power Plant and that greater controls should be placed on the Valley Power Plant.

It is not always the case that reductions will benefit the immediate area where they are made. It is, however, clear that ozone and its precursors tend to travel from south to north along the Lake Michigan shoreline in Wisconsin. The high levels of ozone monitored in Kenosha County at the Pleasant Prairie monitor are most likely due in part to emissions from sources in the Chicago area. Similarly, if reductions are made at the Pleasant Prairie Power Plant, the benefits will be experienced downwind in the Milwaukee area (*i.e.,* near the Valley Power Plant). Similarly, reductions made at the Valley Power Plant will likely reduce ozone downwind. The nearest monitor that would be able to verify this is the WDNR's Regional Headquarters (WDNR SER HQTRS) monitor that is roughly 2.2 miles to the north-northeast of the Valley Power Plant.

TABLE 1

Monitor	2004–2006 Design value (ppm)	2005–2007 Design value (ppm)	2006–2008 Design value (ppm)	2007–2009 Design value (ppm)
Pleasant Prairie	0.083	0.085	0.078	0.076
Health Center	0.068	0.070	0.063	0.064
WDNR SER HQTRS	0.074	0.077	0.068	0.068

The commenter also raises NO_2 levels as a concern. As the commenter states in the comment submitted, "The Milwaukee County design value for 2007–2009 is 47 ppb or 89 μg/m³." However, 47 ppb is well below the National Ambient Air Quality Standard (NAAQS) for NO_2, which is 100 ppb. The NAAQS are established to protect human health and the environment. With this in mind, monitors to determine if areas are meeting or violating the NAAQS are required in and around areas where people live, and these monitors are usually placed at ground-level where people are breathing the ambient air.

The commenter claims to have modeled a violation of the NO_2 standard, but the commenter's modeling technique is flawed. The commenter takes NO_2 emissions concentrations from the Valley Power Plant stack and adds them to background concentrations to get a modeled ambient concentration that shows a violation of the NO_2 NAAQS. First, the emissions data that the commenter uses are outdated (from 1998–2000) and these data fail to reflect controls added since that time, the same controls the commenter mentions in a separate part of its comments. The controls that were added to the Valley Power Plant in 2008 are low NO_X burners, which reduced NO_X emissions by roughly 45%. Second, adding a source's estimated emissions concentrations to background concentration for comparison does not accurately reflect the source's contribution to ground-level NO_2 levels for comparison to a NAAQS. It is inaccurate to use a facility's modeled stack emissions and to add this figure to a background concentration for comparison to a NAAQS, because a facility's stack emissions are at a much higher concentration than what a monitor would record at ground level. Because of dispersion and other chemical reactions that take place in the atmosphere, monitored levels of NO_2 at ground level are much lower than the levels the commenter used in their "modeled" violation of the NO_2 NAAQS. This also explains why the actual monitored values (47 ppb) are less than half of the NO_2 NAAQS (100 ppb) where the commenter claims to have modeled a violation. Because the Milwaukee-Racine area is meeting both the ozone and NO_2 standards, the health of all people within this area is protected with respect to these pollutants.

It is true that the Milwaukee area is in violation of the $PM_{2.5}$ standard. As is the case with ozone, however, the formation of $PM_{2.5}$ as a secondary pollutant resulting from the NO_X emissions from the Valley Power Plant is more likely to impact communities farther downwind than communities in the immediate vicinity. Conversely, the emissions and/or emissions reductions from other power plants upwind of the Milwaukee area (*e.g.,* the Pleasant Prairie Power Plant) are likely to have more of an impact on the communities around the Valley Power Plant. Finally, because the Milwaukee area has been designated as nonattainment for $PM_{2.5}$, Wisconsin is required to develop a plan to reduce emissions of $PM_{2.5}$ precursors to bring the area into attainment with the $PM_{2.5}$ standard. If reductions are needed from the Valley Power Plant, they will be included in the $PM_{2.5}$ attainment demonstration that will be submitted to EPA for approval. Such a demonstration would constitute a separate and distinct rulemaking process than the evaluation of the NO_X RACT rules that we are approving today for purposes of attainment and maintenance of the 1997 8-hour ozone standard.

Comment 10

The commenter states that, "U.S. EPA Should Not Adopt DNR's Reasonable Cost of Control Value of $2,500/ton."

Response 10

EPA has never established a brightline dollars per ton amount as RACT. RACT determinations are not solely based on a dollars per ton of NO_X reduced. RACT determinations take various factors into account. As described in the March 16, 1994, memorandum, "Cost-Effective Nitrogen Oxides (NO_X) Reasonably Available Control Technology (RACT)" from E. Kent Berry, Acting Director of EPA's Air Quality Management Division, "NO_X technologies with a cost-effectiveness range that overlaps the $160 to $1,300 range should, at a minimum, be considered by States in the development of their NO_X RACT requirements." WDNR took the $1,300/ton figure and grew this out to the 2005

equivalent of roughly $2,000/ton using the consumer price index. WDNR took the additional step to increase the cost-effectiveness to $2,500/ton as a reasonable measure for evaluating various controls that would constitute RACT. In its evaluation of RACT for sources in Wisconsin, WDNR examined various control technologies that can reduce NO_X emissions and determined what is reasonably achievable given the availability of these technologies, the type of source, the level of reduction that is generally achievable, and the costs associated with achieving the reductions associated with the technology.

We believe that Wisconsin established significantly stringent limits using the $2,500/ton cost-effectiveness in its evaluation process. Again, we would stress that the dollar per ton factor should be weighed in combination with the actual limits adopted by a state to determine RACT levels. In this case, the NO_X limits that have been adopted are deemed sufficient to meet RACT when considered with the dollar per ton cost-effectiveness used to evaluate the controls assumed to determine the actual limits.

Comment 11

The commenter states that Wisconsin proposed to require sources to perform combustion tuning as part of the State's NO_X RACT requirements. These provisions were removed from the rules that were adopted in final by Wisconsin. The commenter suggests that combustion tuning should be a required part of a RACT determination for any steam generator.

Response 11

WDNR proposed that sources should participate in combustion tuning, since it provides energy and environmental benefits. However, the provisions of the proposed rule dealing with combustion tuning were controversial, because they were viewed by some as overly prescriptive and requiring unnecessary recordkeeping. Considering the comments from the industrial sector in Wisconsin, WDNR dropped combustion tuning requirements from the NO_X RACT rule. This provision would not have accounted for very large emission reductions, because it would have applied to smaller sources and some of the reductions will be achieved through voluntary combustion tuning.

Comment 12

The commenter contends that the Valley Power Plant, located in downtown Milwaukee, causes or contributes to violations of the 1-hour NO_2 NAAQS of 100 parts per billion (ppb) published in the **Federal Register** on February 19, 2010. *See* 75 FR 6474.

Response 12

As the commenter points out, the most current (2007–2009) data available show the Milwaukee area is well below the 100 ppb NO_2 NAAQS with a monitored value of 47 ppb. The purpose of the NO_X RACT rules, as set forth in section 182(f) of the CAA, is to help areas attain and maintain the ozone standard. The NO_X RACT rules do not address the protection of any other NAAQS. If additional NO_X reductions are needed to attain or maintain any other NAAQS, additional measures will be adopted for those NAAQS.

There is no monitored violation of the NO_2 NAAQS. If there was a monitored violation of the NO_2 NAAQS, controls to address a NO_2 nonattainment problem would be dealt with through a separate NO_2 SIP requirement.

EPA Conclusions Resulting From the Public Comments

After considering all public comments received and our responses to those comments, we conclude that no issues have been raised that would cause us to alter the conclusions set forth in the March 24, 2010, proposed rule.

III. What actions is EPA taking?

After reviewing Wisconsin's NO_X RACT SIP submittal, EPA has determined that it meets the criteria set forth in section 182(f) of the CAA. EPA has received comments on the proposed approval of the NO_X RACT rules and, after evaluating these comments, has determined that no changes to the proposed approval made on March 24, 2010 (75 FR 14116) are necessary. Therefore, EPA is approving the NO_X RACT SIP submittal for the Milwaukee-Racine and Sheboygan County 1997 8-hour ozone nonattainment areas. EPA is not, however, rulemaking on Wisconsin NR 428.25(2). EPA will reconsider this portion of the Wisconsin NO_X RACT rules after EPA has finalized a replacement rule for the remanded CAIR.

Non-RACT Portion of June 12, 2007 and September 14, 2009 Submittals

We are also approving miscellaneous changes to other NO_X rules previously approved into the SIP for ozone attainment purposes. These non-RACT NO_X rules, originally approved into Wisconsin's SIP on November 13, 2001 (66 FR 56931), were submitted as part of Wisconsin's reasonable further progress SIP for the 1990 1-hour ozone standard. A description of the rules and the miscellaneous changes being made to those rules can be found in the March 24, 2010, proposed approval (75 FR 14116). The changes clarify the intent of the existing rules and correct typographical errors.

IV. Statutory and Executive Order Reviews

Under the CAA, the Administrator is required to approve a SIP submission that complies with the provisions of the CAA and applicable Federal regulations. 42 U.S.C. 7410(k); 40 CFR 52.02(a). Thus, in reviewing SIP submissions, EPA's role is to approve state choices, provided that they meet the criteria of the CAA. Accordingly, this action merely approves state law as meeting Federal requirements and does not impose additional requirements beyond those imposed by state law. For that reason, this action:

- Is not a "significant regulatory action" subject to review by the Office of Management and Budget under Executive Order 12866 (58 FR 51735, October 4, 1993);
- Does not impose an information collection burden under the provisions of the Paperwork Reduction Act (44 U.S.C. 3501 *et seq.*);
- Is certified as not having a significant economic impact on a substantial number of small entities under the Regulatory Flexibility Act (5 U.S.C. 601 *et seq.*);
- Does not contain any unfunded mandate or significantly or uniquely affect small governments, as described in the Unfunded Mandates Reform Act of 1995 (Pub. L. 104–4);
- Does not have Federalism implications as specified in Executive Order 13132 (64 FR 43255, August 10, 1999);
- Is not an economically significant regulatory action based on health or safety risks subject to Executive Order 13045 (62 FR 19885, April 23, 1997);
- Is not a significant regulatory action subject to Executive Order 13211 (66 FR 28355, May 22, 2001);
- Is not subject to requirements of Section 12(d) of the National Technology Transfer and Advancement Act of 1995 (15 U.S.C. 272 note) because application of those requirements would be inconsistent with the CAA; and
- Does not provide EPA with the discretionary authority to address, as appropriate, disproportionate human health or environmental effects, using practicable and legally permissible methods, under Executive Order 12898 (59 FR 7629, February 16, 1994).

In addition, this rule does not have tribal implications as specified by Executive Order 13175 (65 FR 67249,

November 9, 2000), because the SIP is not approved to apply in Indian country located in the state, and EPA notes that it will not impose substantial direct costs on tribal governments or preempt tribal law.

The Congressional Review Act, 5 U.S.C. 801 *et seq.,* as added by the Small Business Regulatory Enforcement Fairness Act of 1996, generally provides that before a rule may take effect, the agency promulgating the rule must submit a rule report, which includes a copy of the rule, to each House of the Congress and to the Comptroller General of the United States. EPA will submit a report containing this action and other required information to the U.S. Senate, the U.S. House of Representatives, and the Comptroller General of the United States prior to publication of the rule in the **Federal Register.** A major rule cannot take effect until 60 days after it is published in the **Federal Register.** This action is not a "major rule" as defined by 5 U.S.C. 804(2). Under section 307(b)(1) of the Clean Air Act, petitions for judicial review of this action must be filed in the United States Court of Appeals for the appropriate circuit by December 20, 2010. Filing a petition for reconsideration by the Administrator of this final rule does not affect the finality of this action for the purposes of judicial review nor does it extend the time within which a petition for judicial review may be filed, and shall not postpone the effectiveness of such rule or action. This action may not be challenged later in proceedings to enforce its requirements. (*See* section 307(b)(2).)

List of Subjects in 40 CFR Part 52

Environmental protection, Air pollution control, Incorporation by reference, Intergovernmental relations, Nitrogen oxides, Ozone, Volatile organic compounds.

Dated: September 14, 2010.

Bharat Mathur,

Acting Regional Administrator, Region 5.

■ 40 CFR part 52 is amended as follows:

PART 52—[AMENDED]

■ 1. The authority citation for part 52 continues to read as follows:

Authority: 42 U.S.C. 7401 *et seq.*

Subpart YY—Wisconsin

■ 2. Section 52.2570 is amended by adding paragraph (c)(122) to read as follows:

§ 52.2570 Identification of plan.

* * * * *

(c) * * *

(122) On June 12, 2007, the Wisconsin Department of Natural Resources submitted a State Implementation Plan revision request for the state's nitrogen oxides (NO_X) reasonably available control technology (RACT) rules. This request was supplemented on September 14, 2009. The state adopted NO_X RACT rules to satisfy section 182(f) of the Clean Air Act for the Milwaukee-Racine and Sheboygan County areas that were designated as nonattainment for the 1997 8-hour ozone standard and classified as moderate under that standard.

(i) Incorporation by reference. The following sections of the Wisconsin Administrative Code are incorporated by reference:

(A) NR 428.02 Definitions.

(1) NR 428.02(7e) "Maximum theoretical emissions" published in the Wisconsin Administrative Register, on August 30, 2009, No. 644, effective September 1, 2009.

(2) NR 428.02(7m)"Process heater" as published in the Wisconsin Administrative Register, on July 30, 2007, No. 619, effective August 1, 2007.

(B) NR 428.04 Requirements and performance standards for new or modified sources.

(1) NR 428.04(1) and NR 428.04(3)(b) as published in the Wisconsin Administrative Register, on August 30, 2009, No. 644, effective September 1, 2009.

(2) NR 428.04(2)(h)1. and NR 428.04(2)(h)2. as published in the Wisconsin Administrative Register, on July 30, 2007, No. 619, effective August 1, 2007.

(C) NR 428.05 Requirements and performance standards for existing sources.

(1) NR 428.05(1) and NR 428.05(4)(b)2. as published in the Wisconsin Administrative Register, on August 30, 2009, No. 644, effective September 1, 2009.

(2) NR 428.05(3)(e)1. to 4. as published in the Wisconsin Administrative Register, on July 30, 2007, No. 619, effective August 1, 2007.

(D) NR 428.07 General Requirements. NR 428.07(intro.), NR 428.07(1)(a), NR428.07(1)(b)1., NR 428.07(1)(b)3., NR 428.07(3), NR 428.07(4)(c) as published in the Wisconsin Administrative Register, on August 30, 2009, No. 644, effective September 1, 2009.

(E) NR 428.08 Specific provisions for monitoring NO_X and heat input for the purpose of calculating NO_X emissions. NR 428.08(title), NR 428.08(2)(title) and NR 428.08(2)(f) as published in the Wisconsin Administrative Register, on August 30, 2009, No. 644, effective September 1, 2009.

(F) NR 428.09 Quarterly reports. NR 428.09(2)(a) as published in the Wisconsin Administrative Register, on August 30, 2009, No. 644, effective September 1, 2009.

(G) NR 428.12 Alternative monitoring, recordkeeping. NR 428.12 as published in the Wisconsin Administrative Register, on August 30, 2009, No. 644, effective September 1, 2009.

(H) NR 428.20 Applicability and purpose.

(1) NR 428.20(1) as published in the Wisconsin Administrative Register, on August 30, 2009, No. 644, effective September 1, 2009.

(2) NR 428.20(2) as published in the Wisconsin Administrative Register, on July 30, 2007, No. 619, effective August 1, 2007.

(I) NR 428.21 Emissions unit exemptions. NR 428.21 as published in the Wisconsin Administrative Register, on July 30, 2007, No. 619, effective August 1, 2007.

(J) NR 428.22 Emission limitation requirements.

(1) NR 428.22(1)(intro), NR 428.22(1)(a) to (c), NR 428.22(1)(e) to (i), NR 428.22(2)(a) to (b) as published in the Wisconsin Administrative Register, on July 30, 2007, No. 619, effective August 1, 2007.

(2) NR 428.22(1)(d) and NR 428.22(2)(intro) as published in the Wisconsin Administrative Register on August 30, 2009, No. 644, effective September 1, 2009.

(K) NR 428.23 Demonstrating compliance with mission limitations.

(1) NR 428.23(intro), NR 428.23(1)(a), NR 428(1)(b)2. to 8., and NR 428.23(2) as published in the Wisconsin Administrative Register, on July 30, 2007, No. 619, effective August 1, 2007.

(2) NR 428.23(1)(b)1. and NR 428.23(1)(b)9. as published in the Wisconsin Administrative Register on August 30, 2009, No. 644, effective September 1, 2009.

(L) NR 428.24 Recordkeeping and reporting.

(1) NR 428.24(1)(intro), NR 428.24(1)(a), NR 428.24(1)(b)1. to 3., and NR 428.24(2) to (4) as published in the Wisconsin Administrative Register, on July 30, 2007, No. 619, effective August 1, 2007.

(2) NR 428.24(1)(b)(intro) as published in the Wisconsin Administrative Register on August 30, 2009, No. 644, effective September 1, 2009.

(M) NR 428.25 Alternative compliance methods and approaches.

(1) NR 428.25(1)(intro), NR 428.25(1)(a)1.b., NR 428.25(1)(a)2. to 4.,

NR 428.25(1)(b) to (d), NR 428.25(2), NR 428.25(3)(a), and NR 428.25(3)(c) as published in the Wisconsin Administrative Register, on July 30, 2007, No. 619, effective August 1, 2007.

(2) NR 428.25(1)(a)1.a. and c. and (3)(b) as published in the Wisconsin Administrative Register on August 30, 2009, No. 644, effective September 1, 2009.

(N) NR 428.26 Utility reliability waiver. NR 428.26 as published in the Wisconsin Administrative Register, on July 30, 2007, No. 619, effective August 1, 2007.

(ii) Additional material.

(A) NR 484.04 Code of federal regulations appendices. NR 428.04(13), (15m), (16m), (21m), (26m)(bm), (26m)(d) and (27) as published in the Wisconsin Administrative Register, on July 30, 2007, No. 619, effective August 1, 2007.

[FR Doc. 2010–26256 Filed 10–18–10; 8:45 am]

BILLING CODE 6560–50–P

ENVIRONMENTAL PROTECTION AGENCY

40 CFR Part 81

[Docket EPA–R10–OAR–2010–0433; FRL–9214–7]

Determination of Attainment for PM_{10}: Eagle River PM_{10} Nonattainment Area, AK

AGENCY: Environmental Protection Agency (EPA).

ACTION: Direct final rule.

SUMMARY: EPA has determined that the Eagle River nonattainment area in Alaska attained the National Ambient Air Quality Standard (NAAQS) for particulate matter with an aerodynamic diameter of less than or equal to a nominal ten micrometers (PM_{10}) as of December 31, 1994.

DATES: This rule is effective on December 20, 2010, without further notice, unless EPA receives adverse comment by November 18, 2010. If EPA receives adverse comment, we will publish a timely withdrawal in the **Federal Register** informing the public that the rule will not take effect.

ADDRESSES: Submit your comments, identified by Docket ID No. EPA–R10–OAR–2010–0433, by any of the following methods:

- *http://www.regulations.gov:* Follow the on-line instructions for submitting comments.
- *E-mail: vaupel.claudia@epa.gov.*
- *Mail:* Claudia Vergnani Vaupel, EPA Region 10, Office of Air, Waste and Toxics, AWT–107, 1200 Sixth Avenue, Suite 900, Seattle, WA 98101.
- *Hand Delivery/Courier:* EPA Region 10, 1200 Sixth Avenue, Suite 900, Seattle, WA 98101. Attention: Claudia Vergnani Vaupel, Office of Air, Waste and Toxics, AWT–107. Such deliveries are only accepted during normal hours of operation, and special arrangements should be made for deliveries of boxed information.

Instructions: Direct your comments to Docket ID No. EPA–R10–OAR–2010–0433. EPA's policy is that all comments received will be included in the public docket without change and may be made available online at *http://www.regulations.gov,* including any personal information provided, unless the comment includes information claimed to be Confidential Business Information (CBI) or other information whose disclosure is restricted by statute. Do not submit information that you consider to be CBI or otherwise protected through *http://www.regulations.gov* or e-mail. The *http://www.regulations.gov* Web site is an "anonymous access" system, which means EPA will not know your identity or contact information unless you provide it in the body of your comment. If you send an e-mail comment directly to EPA without going through *http://www.regulations.gov* your e-mail address will be automatically captured and included as part of the comment that is placed in the public docket and made available on the Internet. If you submit an electronic comment, EPA recommends that you include your name and other contact information in the body of your comment and with any disk or CD–ROM you submit. If EPA cannot read your comment due to technical difficulties and cannot contact you for clarification, EPA may not be able to consider your comment. Electronic files should avoid the use of special characters, any form of encryption, and be free of any defects or viruses.

Docket: All documents in the docket are listed in the *http://www.regulations.gov* index. Although listed in the index, some information is not publicly available, e.g., CBI or other information whose disclosure is restricted by statute. Certain other material, such as copyrighted material, is not placed on the Internet and will be publicly available only in hard copy. Publicly available docket materials are available either electronically in *http://www.regulations.gov* or in hard copy during normal business hours at the Office of Air, Waste and Toxics, EPA Region 10, 1200 Sixth Avenue, Seattle, WA 98101.

FOR FURTHER INFORMATION CONTACT: Claudia Vergnani Vaupel at telephone number: (206) 553–6121, e-mail address: *vaupel.claudia@epa.gov,* or the above EPA, Region 10 address.

SUPPLEMENTARY INFORMATION: Throughout this document wherever "we", "us" or "our" are used, we mean EPA. Information is organized as follows:

Table of Comments

I. Background
- A. PM^{10} Standard
- B. The Eagle River PM_{10} Nonattainment Area
- C. Attainment Date for the Eagle River PM^{10} Nonattainment Area
- D. PM^{10} Planning in the Eagle River PM_{10} Nonattainment Area

II. Attainment Determination
- A. What are the requirements for attainment determinations?
- B. What do the air quality data show as of the December 31, 1994 attainment date?
- C. What do more recent air quality data show?

III. EPA's Final Action

IV. Statutory and Executive Order Reviews

I. Background

A. PM_{10} Standard

The NAAQS are levels for certain ambient air pollutants set by EPA to protect public health and welfare. PM_{10}, or particulate matter with an aerodynamic diameter less than or equal to a nominal 10 micrometers, is among the ambient air pollutants for which EPA has established health-based standards. On July 1, 1987 (52 FR 24634), EPA promulgated two primary standards for PM_{10}: A 24-hour standard of 150 micrograms per cubic meter ($\mu g/m^3$) and an annual PM_{10} standard of 50 $\mu g/m^3$. EPA also promulgated secondary PM_{10} standards that were identical to the primary standards.

Effective December 18, 2006, EPA revoked the annual PM_{10} standard but retained the 24-hour PM_{10} standard. 71 FR 61144 (October 17, 2006). The 24-hour PM_{10} standard is attained when the expected number of days per calendar year with a 24-hour concentration above 154 $\mu g/m^3$, as determined in accordance with 40 CFR part 50, appendix K, is equal to or less than one.[1] 40 CFR 50.6 and 40 CFR part 50, appendix K.

[1] An exceedance is defined as a daily value that is above the level of the 24-hour standard (150 $\mu g/m^3$) after rounding to the nearest 10 $\mu g/m^3$ (i.e. values ending in 5 or greater are to be rounded up). Thus, a recorded value of 154 $\mu g/m^3$ would not be an exceedance since it would be rounded to 150μ/m^3 whereas a recorded value of 155 $\mu g/m^3$ would be an exceedance since it would be rounded to 160 μ/m^3. See 40 CFR part 50, appendix K, section 1.0.

B. The Eagle River PM_{10} Nonattainment Area

On August 7, 1987 (52 FR 29383), EPA identified a number of areas across the country as PM_{10} "Group I" areas of concern, that is, areas with a 95% or greater likelihood of violating the PM_{10} NAAQS and requiring substantial planning efforts. The Eagle River PM_{10} nonattainment area was identified as a Group I area of concern.

Areas meeting the requirements of section 107(d)(4)(B) were designated nonattainment for PM_{10} by operation of law and classified "moderate" upon enactment of the 1990 Clean Air Act Amendments. See generally 42 U.S.C. 7407(d)(4)(B). These areas included all former Group I PM_{10} planning areas identified in 52 FR 29383 (August 7, 1987), and further clarified in 55 FR 45799 (October 31, 1990), and any other areas violating the NAAQS for PM_{10} prior to January 1, 1989. A **Federal Register** notice announcing the areas designated nonattainment for PM_{10} upon enactment of the 1990 Clean Air Act Amendments, known as "initial" PM_{10} nonattainment areas, was published on March 15, 1991 (56 FR 11101). The Eagle River PM_{10} nonattainment area was one of these initial moderate PM_{10} nonattainment areas.

C. Attainment Date for the Eagle River PM_{10} Nonattainment Area

All initial moderate PM_{10} nonattainment areas had the same applicable attainment date of December 31, 1994. States containing initial moderate PM_{10} nonattainment areas were required to develop and submit to EPA by November 15, 1991, a state implementation plan (SIP) revision providing implementation of reasonably available control measures (RACM), including reasonably available control technology (RACT), and a demonstration of whether attainment of the PM_{10} NAAQS by the December 31, 1994, attainment date was practicable. See section 189(a).

D. PM_{10} Planning in the Eagle River PM_{10} Nonattainment Area

After the Eagle River PM_{10} nonattainment area was designated nonattainment for PM_{10}, the Alaska Department of Environmental Conservation (ADEC) began in the early 1990s to prepare the technical elements needed to bring the area into attainment and meet the planning requirements of title I of the CAA. Based on these technical products ADEC, developed and implemented control measures on PM_{10} sources in the Eagle River PM_{10} nonattainment area. The State submitted these control measures to EPA on October 15, 1991, as a moderate PM_{10} nonattainment SIP revision under section 189(a) of the Act. The control strategy focused on implementing road surfacing and paving projects to reduce fugitive dust from paved and unpaved streets and windblown dust. EPA took final action to approve the State's moderate PM_{10} SIP on August 13, 1993. See 58 FR 43084.

II. Attainment Determination

A. What are the requirements for attainment determinations?

Generally, EPA determines whether an area's air quality is meeting the PM_{10} NAAQS based upon complete, quality-assured data gathered at established state and local air monitoring stations (SLAMS) and national air monitoring stations (NAMS) in the nonattainment areas and entered into the EPA Air Quality System (AQS). Data from air monitors operated by state/local/tribal agencies in compliance with EPA monitoring requirements must be submitted to AQS. EPA relies primarily on data in AQS when determining the attainment status of an area. See 40 CFR 50.6; 40 CFR part 50, appendix J; 40 CFR part 53; 40 CFR part 58, appendix A. EPA will also consider air quality data from other air monitoring stations in the nonattainment area provided that the stations meet the Federal monitoring requirements for SLAMS, including the quality assurance and quality control criteria in 40 CFR part 58, appendix A. 40 CFR 58.14 (2006) and 58.20 (2007);[2] 71 FR 61236, 61242 (October 17, 2006). All valid data are reviewed to determine the area's air quality status in accordance with 40 CFR part 50, appendix K.

Attainment of the 24-hour PM_{10} standard is determined by calculating the expected number of exceedances of the standard in a year. The 24-hour standard is attained when the expected number of days per calendar year with a 24-hour concentration above 154 $\mu g/m^3$, as determined in accordance with 40 CFR part 50, appendix K, is less than or equal to one. Generally, three consecutive years of air quality data are required to show attainment of the 24-hour PM_{10} standard. See 40 CFR part 50 and appendix K.

B. What do the air quality data show as of the December 31, 1994 attainment date?

Because the Eagle River PM_{10} nonattainment area has a December 31, 1994, attainment date, our determination of whether or not the area attained the standard is based on 1992, 1993 and 1994 complete quality-assured data for the area. During that period, the State of Alaska operated two PM_{10} SLAMS monitoring sites within the Eagle River nonattainment area: the Parkgate site and the Baronoff site. Both monitoring sites met EPA SLAMS network design and siting requirements set forth at 40 CFR part 58, appendices D and E. The Parkgate site began operation in 1985 and continues to operate. The Baronoff site began operating in May of 1992 and ceased operation in 1996.

Parkgate Site

Our review of complete quality-assured air quality data from the Parkgate site for the period from January 1, 1992 through December 31, 1994, shows that one 24-hour PM_{10} value, reported on September 16, 1992, exceeded the level of the 24-hour standard.[3] This 24-hour value was flagged by ADEC in AQS as a special event due to a volcanic eruption. Under EPA's 1994 guidance,[4] data may be excluded from regulatory determinations related to exceedances or violations of the NAAQS if it is adequately demonstrated that a special event caused the exceedance or violation. EPA concurred on this exceedance as a special event in a letter to ADEC on May 24, 1995. Consequently, this value is excluded from expected exceedance calculations. Because there was no other recorded exceedance of the 24-hour PM_{10} standard during calendar years 1992–1994, the expected PM_{10} exceedance rate for the 1992–1994 period at the Parkgate site is 0.0. Therefore, the Parkgate site has demonstrated attainment for the 24-hour PM_{10}

[2] EPA promulgated amendments to the ambient air monitoring regulations in 40 CFR parts 53 and 58 on October 17, 2006. *See* 71 FR 61236. The requirements for Special Purpose Monitors were revised and moved from 40 CFR 58.14 to 40 CFR 58.20.

[3] To meet data completeness criteria, missing data in the first quarter of 1994 was substituted according to EPA guidance. See "PM_{10} SIP Development Guideline" (EPA–450/2–86–001, June 1987), "Guideline on Exceptions to Data Requirements for Determining Attainment of Particulate Matter Standards" (EPA–450 4–87–005, April 1987), and the data completeness discussion in the Memorandum from Chris Hall entitled "Eagle River PM_{10} Attainment Determination," (October 5, 2010).

[4] "Guideline on the Identification and Handling of Ambient Air Quality Data Affected by Special Events or Special Conditions" (EPA–454/D–94–001, September, 1994).

NAAQS as of the attainment date of December 31, 1994.

Additionally, we evaluated expected exceedances for the three-year period prior to and after the attainment date. Because other than the September 1992 special event, no other exceedance was recorded during calendar years 1991 through 1997, the Parkgate site has also demonstrated attainment of the 24-hour PM_{10} NAAQS for calendar years 1991–1993, 1993–1995, 1994–1996, and 1995–1997.

Baronoff Monitoring Site

EPA also reviewed the data from the Baronoff site, the other SLAMS site in the Eagle River PM_{10} nonattainment area that was operating during the 1992–1994 period. Because this monitor began operating on May 27, 1992, and did not operate for one full quarter during the 1992–1994 period, the data from this monitor cannot be used for making a determination of attainment for the 1992–1994 period.[5] Even so, we can evaluate whether the data from this monitor show that the Eagle River PM_{10} nonattainment area failed to attain for the 1992–1994 period. Although the Baronoff site recorded three exceedances of the 24-hour PM_{10} NAAQS in the 1992–1994 period (all in 1992), these values were flagged by ADEC as special events due to a volcanic eruption. EPA concurred on the flagged exceedances in a May 24, 1995, letter to ADEC and thus these values are excluded from the expected exceedance calculations. Outside of these flagged exceedances there has been no other exceedance of the 24-hour PM_{10} standard at the Baronoff site from May 27, 1992 through December 31, 1994 (nor through October 1, 1996, when the monitor ceased operation). We therefore conclude that data from the Baronoff site does not show the Eagle River PM_{10} nonattainment area failed to attain the PM_{10} standard by the December 31, 1994, attainment date.[6]

C. What does more recent air quality data show?

Although the attainment date for the Eagle River PM_{10} nonattainment area is December 31, 1994, and the air quality data used to determine attainment by that date includes all data collected in calendar years 1992, 1993, and 1994, EPA has also reviewed the air quality data collected at the State monitoring sites from January 1992 through the most recent available data in AQS. The Parkgate site recorded one exceedance of the standard in each of the years 2007 and 2009. These exceedances were timely flagged by ADEC as exceptional events due to high winds and will be evaluated by EPA under the Exceptional Events Rule and addressed in a separate action.[7] Under the Exceptional Events Rule, EPA may exclude data from regulatory determinations related to exceedances or violations of the NAAQS if it is adequately demonstrated that an exceptional event caused the exceedance or violation. 40 CFR 50.1, 50.14. If in the future EPA determines, after notice-and-comment rulemaking, that the area is no longer attaining the PM_{10} NAAQS, EPA will publish such determination in the **Federal Register.**

III. EPA's Final Action

EPA is determining that the Eagle River area has attained the PM_{10} standard based on the three years of complete, quality-assured data as of the attainment date of December 31, 1994. For the period from 1992–1994, the expected exceedance rate of 0.0 for the Parkgate site is equal to or less than the expected exceedance rate of 1.0 that is allowed under the PM_{10} NAAQS. Because complete quality-assured data for this period show an expected exceedance rate equal to or below the PM_{10} standard, EPA concludes that the area has met the standard. EPA therefore determines that the Eagle River nonattainment area has attained the 24-hour PM_{10} NAAQS as of the December 31, 1994, attainment date.

IV. Statutory and Executive Order Reviews

Under the Clean Air Act, the Administrator is required to approve a SIP submission that complies with the provisions of the Act and applicable Federal regulations. 42 U.S.C. 7410(k); 40 CFR 52.02(a). Thus, in reviewing SIP submissions, EPA's role is to approve state choices, provided that they meet the criteria of the Clean Air Act. Accordingly, this action merely approves state law as meeting Federal requirements and does not impose additional requirements beyond those imposed by state law. For that reason, this action:

- Is not a "significant regulatory action" subject to review by the Office of Management and Budget under Executive Order 12866 (58 FR 51735, October 4, 1993);
- Does not impose an information collection burden under the provisions of the Paperwork Reduction Act (44 U.S.C. 3501 *et seq.*);
- Is certified as not having a significant economic impact on a substantial number of small entities under the Regulatory Flexibility Act (5 U.S.C. 601 *et seq.*);
- Does not contain any unfunded mandate or significantly or uniquely affect small governments, as described in the Unfunded Mandates Reform Act of 1995 (Pub. L. 104–4);
- Does not have Federalism implications as specified in Executive Order 13132 (64 FR 43255, August 10, 1999);
- Is not an economically significant regulatory action based on health or safety risks subject to Executive Order 13045 (62 FR 19885, April 23, 1997);
- Is not a significant regulatory action subject to Executive Order 13211 (66 FR 28355, May 22, 2001);
- Is not subject to requirements of Section 12(d) of the National Technology Transfer and Advancement Act of 1995 (15 U.S.C. 272 note) because application of those requirements would be inconsistent with the Clean Air Act; and
- Does not provide EPA with the discretionary authority to address, as appropriate, disproportionate human health or environmental effects, using practicable and legally permissible methods, under Executive Order 12898 (59 FR 7629, February 16, 1994).

In addition, this rule does not have tribal implications as specified by Executive Order 13175 (65 FR 67249, November 9, 2000), because the SIP is not approved to apply in Indian country located in the state, and EPA notes that it will not impose substantial direct costs on tribal governments or preempt tribal law.

The Congressional Review Act, 5 U.S.C. 801 *et seq.,* as added by the Small Business Regulatory Enforcement Fairness Act of 1996, generally provides that before a rule may take effect, the agency promulgating the rule must submit a rule report, which includes a copy of the rule, to each House of the Congress and to the Comptroller General of the United States. EPA will submit a report containing this action and other required information to the U.S. Senate, the U.S. House of Representatives, and the Comptroller General of the United States prior to publication of the rule in the **Federal Register.** A major rule cannot take effect until 60 days after it is published in the **Federal Register.** This action is not a "major rule" as defined by 5 U.S.C. 804(2).

[5] Because data for the 1st quarter 1992 was less than 50% complete, the substitution guidance used for the Parkgate site was not used for this site.

[6] Based on the available data, the site does not show a violation of the 24-hour PM_{10} NAAQS. See 40 CFR part 50, appendix K, section 2.3(c).

[7] Note that ADEC has recently advised EPA of an exceedance in September 2010 that they also intend to flag as a high wind exceptional event.

Under section 307(b)(1) of the Clean Air Act, petitions for judicial review of this action must be filed in the United States Court of Appeals for the appropriate circuit by December 20, 2010. Filing a petition for reconsideration by the Administrator of this final rule does not affect the finality of this action for the purposes of judicial review nor does it extend the time within which a petition for judicial review may be filed, and shall not postpone the effectiveness of such rule or action. Parties with objections to this direct final rule are encouraged to file a comment in response to the parallel notice of proposed rulemaking for this action published in the proposed rules section of today's **Federal Register,** rather than file an immediate petition for judicial review of this direct final rule, so that EPA can withdraw this direct final rule and address the comment in the proposed rulemaking. This action may not be challenged later in proceedings to enforce its requirements. See section 307(b)(2).

List of Subjects in 40 CFR Part 81

Environmental protection, Air pollution control, Intergovernmental relations, Particulate matter, Reporting and recordkeeping requirements.

Dated: October 7, 2010.

Dennis J. McLerran,

Regional Administrator, Region 10.

[FR Doc. 2010–26258 Filed 10–18–10; 8:45 am]

BILLING CODE 6560–50–P

DEPARTMENT OF HOMELAND SECURITY

Federal Emergency Management Agency

44 CFR Part 67

[Docket ID FEMA–2010–0003]

Final Flood Elevation Determinations

AGENCY: Federal Emergency Management Agency, DHS.

ACTION: Final rule.

SUMMARY: Base (1% annual-chance) Flood Elevations (BFEs) and modified BFEs are made final for the communities listed below. The BFEs and modified BFEs are the basis for the floodplain management measures that each community is required either to adopt or to show evidence of being already in effect in order to qualify or remain qualified for participation in the National Flood Insurance Program (NFIP).

DATES: The date of issuance of the Flood Insurance Rate Map (FIRM) showing BFEs and modified BFEs for each community. This date may be obtained by contacting the office where the maps are available for inspection as indicated in the table below.

ADDRESSES: The final BFEs for each community are available for inspection at the office of the Chief Executive Officer of each community. The respective addresses are listed in the table below.

FOR FURTHER INFORMATION CONTACT: Roy E. Wright, Deputy Director, Risk Analysis Division, Federal Insurance and Mitigation Administration, Federal Emergency Management Agency, 500 C Street, SW., Washington, DC 20472, (202) 646–3461, or (e-mail) *roy.e.wright@dhs.gov.*

SUPPLEMENTARY INFORMATION: The Federal Emergency Management Agency (FEMA) makes the final determinations listed below for the modified BFEs for each community listed. These modified elevations have been published in newspapers of local circulation and ninety (90) days have elapsed since that publication. The Deputy Federal Insurance and Mitigation Administrator has resolved any appeals resulting from this notification.

This final rule is issued in accordance with section 110 of the Flood Disaster Protection Act of 1973, 42 U.S.C. 4104, and 44 CFR part 67. FEMA has developed criteria for floodplain management in floodprone areas in accordance with 44 CFR part 60.

Interested lessees and owners of real property are encouraged to review the proof Flood Insurance Study and FIRM available at the address cited below for each community. The BFEs and modified BFEs are made final in the communities listed below. Elevations at selected locations in each community are shown.

National Environmental Policy Act. This final rule is categorically excluded from the requirements of 44 CFR part 10, Environmental Consideration. An environmental impact assessment has not been prepared.

Regulatory Flexibility Act. As flood elevation determinations are not within the scope of the Regulatory Flexibility Act, 5 U.S.C. 601–612, a regulatory flexibility analysis is not required.

Regulatory Classification. This final rule is not a significant regulatory action under the criteria of section 3(f) of Executive Order 12866 of September 30, 1993, Regulatory Planning and Review, 58 FR 51735.

Executive Order 13132, Federalism. This final rule involves no policies that have federalism implications under Executive Order 13132.

Executive Order 12988, Civil Justice Reform. This final rule meets the applicable standards of Executive Order 12988.

List of Subjects in 44 CFR Part 67

Administrative practice and procedure, Flood insurance, Reporting and recordkeeping requirements.

■ Accordingly, 44 CFR part 67 is amended as follows:

PART 67—[AMENDED]

■ 1. The authority citation for part 67 continues to read as follows:

Authority: 42 U.S.C. 4001 *et seq.;* Reorganization Plan No. 3 of 1978, 3 CFR, 1978 Comp., p. 329; E.O. 12127, 44 FR 19367, 3 CFR, 1979 Comp., p. 376.

§ 67.11 [Amended]

■ 2. The tables published under the authority of § 67.11 are amended as follows:

Flooding source(s)	Location of referenced elevation	* Elevation in feet (NGVD) + Elevation in feet (NAVD) # Depth in feet above ground ∧ Elevation in meters (MSL) Modified	Communities affected
Marion County, Alabama, and Incorporated Areas Docket No.: FEMA–B–1041			
Unnamed Tributary to Reddy Creek.	At the confluence with Reedy Creek	+458	Town of Gu-Win.

Flooding source(s)	Location of referenced elevation	* Elevation in feet (NGVD) + Elevation in feet (NAVD) # Depth in feet above ground ∧ Elevation in meters (MSL) Modified	Communities affected
	Approximately 1,825 feet upstream of the confluence with Reedy Creek.	+459	

* National Geodetic Vertical Datum.
+ North American Vertical Datum.
# Depth in feet above ground.
∧ Mean Sea Level, rounded to the nearest 0.1 meter.

ADDRESSES

Town of Gu-Win
Maps are available for inspection at 4835 U.S. Route 43, Gu-Win, AL 35563.

Cowley County, Kansas, and Incorporated Areas
Docket No.: FEMA–B–1016

Black Crook Creek	Approximately 0.38 mile upstream of Simpson Avenue	+1154	City of Winfield, Unincorporated Areas of Cowley County.
	Approximately 0.16 mile upstream of 152nd Street	+1244	
Black Crook Creek Tributary 1	Approximately 0.36 mile downstream of 101st Road	+1120	Unincorporated Areas of Cowley County.
	Approximately 0.91 mile upstream of 103rd Road	+1188	
Black Crook Creek Tributary 2	At the confluence with Black Crook Creek	+1132	City of Winfield, Unincorporated Areas of Cowley County.
	Approximately 350 feet upstream of K–360	+1183	

* National Geodetic Vertical Datum.
+ North American Vertical Datum.
# Depth in feet above ground.
∧ Mean Sea Level, rounded to the nearest 0.1 meter.

ADDRESSES

City of Winfield
Maps are available for inspection at the City Office, 200 East 9th Avenue, Winfield, KS 67156.

Unincorporated Areas of Cowley County
Maps are available for inspection at the Cowley County Office, 311 East 9th Avenue, Winfield, KS 67156.

Edmonson County, Kentucky, and Incorporated Areas
Docket No.: FEMA–B–1074

Alexander Creek (backwater effects from Green River).	From the confluence with the Green River to approximately 240 feet upstream of the confluence with Alexander Creek Tributary 3.	+446	Unincorporated Areas of Edmonson County.
Bear Creek (backwater effects from Green River).	From the confluence with the Green River to approximately 3.8 miles upstream of the confluence with the Green River.	+438	Unincorporated Areas of Edmonson County.
Beaverdam Creek South (backwater effects from Green River).	From the confluence with the Green River to approximately 3.4 miles upstream of the confluence with the Green River.	+449	City of Brownsville, Unincorporated Areas of Edmonson County.
Beaverdam Creek Tributary 6 (backwater effects from Green River).	From the confluence with Beaverdam Creek South to approximately 1,400 feet upstream of the confluence with Beaverdam Creek South.	+449	City of Brownsville, Unincorporated Areas of Edmonson County.
Brier Creek (backwater effects from Nolin Lake).	From the confluence with Nolin Lake to approximately 0.6 mile upstream of the confluence with Nolin Lake.	+560	Unincorporated Areas of Edmonson County.
Bylew Creek (backwater effects from Green River).	From the confluence with the Nolin River to approximately 1.2 miles upstream of the confluence with the Nolin River.	+455	Unincorporated Areas of Edmonson County.
Dog Creek (backwater effects from Nolin Lake).	From the county boundary to approximately 0.6 mile upstream of the confluence with Dog Creek Tributary 1.	+560	Unincorporated Areas of Edmonson County.
Green River	At the confluence with Bear Creek	+438	City of Brownsville, Unincorporated Areas of Edmonson County.
	Approximately 3.4 miles upstream of the confluence with Ugly Creek.	+480	
Green River Tributary 4 (backwater effects from Green River).	From the confluence with the Green River to approximately 0.6 mile upstream of the confluence with the Green River.	+445	Unincorporated Areas of Edmonson County.

Flooding source(s)	Location of referenced elevation	* Elevation in feet (NGVD) + Elevation in feet (NAVD) # Depth in feet above ground ∧ Elevation in meters (MSL) Modified	Communities affected
Honey Creek (backwater effects from Green River).	From the confluence with the Green River to approximately 1.6 miles upstream of the confluence with the Green River.	+443	Unincorporated Areas of Edmonson County.
Indian Creek (backwater effects from Green River).	From the confluence with the Green River to approximately 0.9 mile upstream of the confluence with ther Green River.	+452	City of Brownsville, Unincorporated Areas of Edmonson County.
Laurel Branch (backwater effects from Green River).	From the confluence with Beaverdam Creek South to approximately 0.5 mile upstream of the confluence with Beaverdam Creek South.	+449	City of Brownsville.
Little Beaverdam Creek (backwater effects from Green River).	From the confluence with the Green River to approximately 1 mile upstream of the confluence with Sally Branch.	+442	Unincorporated Areas of Edmonson County.
Nolin Lake	Entire shoreline within Edmonson County	+560	Unincorporated Areas of Edmonson County.
Nolin River (backwater effects from Green River).	From the confluence with the Green River to approximately 0.8 mile upstream of the confluence with Bylew Creek.	+455	Unincorporated Areas of Edmonson County.
Sally Branch (backwater effects from Green River).	From the confluence with Little Beaverdam Creek to approximately 0.6 mile upstream of the confluence with Little Beaverdam Creek.	+442	Unincorporated Areas of Edmonson County.
Ugly Creek (backwater effects from Green River).	From the confluence with the Green River to approximately 1.1 miles upstream of the confluence with the Green River.	+477	Unincorporated Areas of Edmonson County.
Wolf Creek (backwater effects from Nolin Lake).	From the confluence with Dog Creek to approximately 1 mile upstream of the confluence with Dog Creek.	+560	Unincorporated Areas of Edmonson County.

* National Geodetic Vertical Datum.
+ North American Vertical Datum.
# Depth in feet above ground.
∧ Mean Sea Level, rounded to the nearest 0.1 meter.

ADDRESSES

City of Brownsville

Maps are available for inspection at 121 Washington Street, Brownsville, KY 42210.

Unincorporated Areas of Edmonson County

Maps are available for inspection at 108 North Main Street, Brownsville, KY 42210.

Luna County, New Mexico, and Incorporated Areas
Docket No.: FEMA–B–1065

Mimbres River	Approximately 2.1 miles upstream of State Road 549 Southeast.	+4151	Unincorporated Areas of Luna County.
	Approximately 1,500 feet downstream of I–10	+4282	

* National Geodetic Vertical Datum.
+ North American Vertical Datum.
# Depth in feet above ground.
∧ Mean Sea Level, rounded to the nearest 0.1 meter.

ADDRESSES

Unincorporated Areas of Luna County

Maps are available for inspection at 201 East Cody Street, Deming, NM 88030.

Washington County, Rhode Island (All Jurisdictions)
Docket No.: FEMA–B–1075

Mattatuxet River	At the confluence with the Pettaquamscutt River	+10	Town of North Kingstown.
	At the downstream side of the Gilbert Stuart Dam	+10	
Narragansett Bay (Mill Creek)	From a point approximately 500 feet northwest of the intersection of Asqah Drive and Camp Avenue, extending northeast to Quonset Road and following the unnamed tributary to Mill Creek, to a point approximately 600 feet east of the intersection of Camp Avenue and Gateway Road.	+12	Town of North Kingstown.
Pawcatuck River	Approximately 70 feet upstream of Ashaway Road (State Route 3).	+33	Town of Hopkinton, Town of Richmond.
	Approximately 1,518 feet upstream of Biscuit City Road	+89	
Pettaquamscutt River	At the Town of North Kingstown/ South Kingstown/Narragansett corporate limits (approximately 5,060 feet upstream of Bridgetown Road).	+10	Town of North Kingstown.

Flooding source(s)	Location of referenced elevation	* Elevation in feet (NGVD) + Elevation in feet (NAVD) # Depth in feet above ground ∧ Elevation in meters (MSL) Modified	Communities affected
Tomaquag Brook	At the confluence with the Mattatuxet River At the confluence with the Pawcatuck River Approximately 1,210 feet downstream of Chase Hill Road	+10 +35 +35	Town of Hopkinton.

* National Geodetic Vertical Datum.
+ North American Vertical Datum.
# Depth in feet above ground.
∧ Mean Sea Level, rounded to the nearest 0.1 meter.

ADDRESSES

Town of Hopkinton
Maps are available for inspection at the Town Hall, 1 Town House Road, Hopkinton, RI 028330.

Town of North Kingstown
Maps are available for inspection at the Department of Public Works and Engineering, 2050 Davisville Road, North Kingstown, RI 02852.

Town of Richmond
Maps are available for inspection at the Richmond Town Hall, 5 Richmond Townhouse Road, Wyoming, RI 02898.

Spink County, South Dakota, and Incorporated Areas
Docket No.: FEMA–B–1069

James River	Approximately 2.8 miles upstream of 188th Street Approximately 7,920 feet downstream of 149th Street	+1253 +1275	Unincorporated Areas of Spink County.

* National Geodetic Vertical Datum.
+ North American Vertical Datum.
# Depth in feet above ground.
∧ Mean Sea Level, rounded to the nearest 0.1 meter.

ADDRESSES

Unincorporated Areas of Spink County
Maps are available for inspection at 210 East 7th Avenue, Redfield, SD 57469.

Houston County, Tennessee, and Incorporated Areas
Docket No.: FEMA–B–1066

Tennessee River	Houston County boundary (approximately at River Mile 74.3). Houston County boundary (approximately at River Mile 82.5).	+375 +375	Unincorporated Areas of Houston County.

* National Geodetic Vertical Datum.
+ North American Vertical Datum.
# Depth in feet above ground.
∧ Mean Sea Level, rounded to the nearest 0.1 meter.

ADDRESSES

Unincorporated Areas of Houston County
Maps are available for inspection at 31 East Main Street, 101 Courthouse, Erin, TN 37061.

Macon County, Tennessee, and Incorporated Areas
Docket No.: FEMA–B–1047

Salt Lick Creek	Approximately 1,624 feet upstream of State Route 151 Approximately 1,965 feet upstream of State Route 151	+778 +778	Unincorporated Areas of Macon County.

* National Geodetic Vertical Datum.
+ North American Vertical Datum.
# Depth in feet above ground.
∧ Mean Sea Level, rounded to the nearest 0.1 meter.

ADDRESSES

Unincorporated Areas of Macon County
Maps are available for inspection at 201 County Courthouse, Lafayette, TN 37083.

Stewart County, Tennessee, and Incorporated Areas
Docket No.: FEMA–B–1065

Tennessee River	At the Houston County boundary (approximately at River Mile 74.2).	+375	Unincorporated Areas of Stewart County.

Flooding source(s)	Location of referenced elevation	* Elevation in feet (NGVD) + Elevation in feet (NAVD) # Depth in feet above ground ∧ Elevation in meters (MSL) Modified	Communities affected
	At the State of Kentucky/State of Tennessee boundary (approximately at River Mile 49.2).	+375	

* National Geodetic Vertical Datum.
+ North American Vertical Datum.
# Depth in feet above ground.
∧ Mean Sea Level, rounded to the nearest 0.1 meter.

ADDRESSES

Unincorporated Areas of Stewart County

Maps are available for inspection at 226 Lakeview Drive, Dover, TN 37058.

Bowie County, Texas, and Incorporated Areas
Docket No.: FEMA–B–1034

Days Creek	Approximately 4,910 feet downstream of Loop 151	+255	Unincorporated Areas of Bowie County.
	Approximately 1,480 feet upstream of Lubbock Street	+273	
No Name Creek	Approximately 1,015 feet upstream of Lakeridge Drive	+281	Unincorporated Areas of Bowie County.
	Approximately 1,273 feet downstream of Lakeridge Drive	+290	
Unnamed Tributary of Day's Creek.	At the confluence with Unnamed Tributary and Days Creek.	+259	Unincorporated Areas of Bowie County.
	Approximately 2,663 feet upstream of the confluence with Days Creek.	+261	

* National Geodetic Vertical Datum.
+ North American Vertical Datum.
# Depth in feet above ground.
∧ Mean Sea Level, rounded to the nearest 0.1 meter.

ADDRESSES

Unincorporated Areas of Bowie County

Maps are available for inspection at the Bowie County Courthouse, 710 James Bowie Drive, New Boston, TX 75570.

Goliad County, Texas, and Incorporated Areas
Docket Nos.: FEMA–B–7774 and FEMA–B–1060

Maddox Branch	Approximately 65 feet upstream of Fulcord Street	+142	City of Goliad.
	Approximately 1,550 feet upstream of U.S. Route 183	+199	
San Antonio River	Approximately 600 feet upstream of the confluence with Maddox Branch.	+142	City of Goliad, Unincorporated Areas of Goliad County.
	Approximately 1,300 feet upstream of South San Patricio Street.	+147	
Southwest City Drain	Approximately 950 feet downstream of Fannin Street	+147	City of Goliad.
	Approximately 150 feet upstream of West Oak Street	+199	
Sparrow Branch	Approximately 475 feet downstream of Hord Street	+146	City of Goliad.
	Approximately 825 feet upstream of Sunset Avenue	+199	

* National Geodetic Vertical Datum.
+ North American Vertical Datum.
# Depth in feet above ground.
∧ Mean Sea Level, rounded to the nearest 0.1 meter.

ADDRESSES

City of Goliad

Maps are available for inspection at 152 West End Street, Goliad, TX 77963.

Unincorporated Areas of Goliad County

Maps are available for inspection at 127 North Courthouse Square, Goliad, TX 77963.

Karnes County, Texas, and Incorporated Areas
Docket Nos.: FEMA–B–7774 and FEMA–B–1061

Escondido Creek	Approximately 700 feet downstream of the confluence with Nichols Creek.	+258	City of Kenedy, Unincorporated Areas of Karnes County.
	Approximately 450 feet upstream of the confluence with Panther Creek.	+274	

Flooding source(s)	Location of referenced elevation	* Elevation in feet (NGVD) + Elevation in feet (NAVD) # Depth in feet above ground ∧ Elevation in meters (MSL) Modified	Communities affected
Marcelinas Creek	Approximately 730 feet upstream of the confluence with Tributary 1 to Marcelinas Creek Watershed.	+300	City of Falls City, Unincorporated Areas of Karnes County.
	Approximately 830 feet upstream of the confluence with Tributary 8 to Marcelinas Creek Watershed.	+307	
Nichols Creek	Approximately 265 feet downstream of South 2nd Street	+269	City of Kenedy.
Ojo de Agua Creek	Approximately 1,050 feet downstream of FM 81	+262	Town of Runge, Unincorporated Areas of Karnes County.
	Approximately 860 feet upstream of the confluence with Tributary 9 to Ojo de Agua Watershed.	+287	
San Antonio River	Approximately 460 feet downstream of the confluence with Marcelinas Creek.	+300	City of Falls City, Unincorporated Areas of Karnes County.
	Approximately 1,440 feet downstream of the confluence with Tributary 199 to Lower San Antonio River Watershed.	+304	

* National Geodetic Vertical Datum.
+ North American Vertical Datum.
# Depth in feet above ground.
∧ Mean Sea Level, rounded to the nearest 0.1 meter.

ADDRESSES

City of Falls City
Maps are available for inspection at 208 North Irvin Street, Falls City, TX 78113.

City of Kenedy
Maps are available for inspection at 303 West Main Street, Kenedy, TX 78119.

Town of Runge.
Maps are available for inspection at 109 North Helena, Runge, TX 78151.

Unincorporated Areas of Karnes County
Maps are available for inspection at the Karnes County Courthouse, 101 North Panna Maria, Karnes City, TX 78118.

Upshur County, Texas, and Incorporated Areas
Docket No.: FEMA–B–1066

Victory Branch	Approximately 680 feet downstream of Salt Water Road	+315	Unincorporated Areas of Upshur County.
	Approximately 650 feet downstream of Salt Water Road	+315	

* National Geodetic Vertical Datum.
+ North American Vertical Datum.
# Depth in feet above ground.
∧ Mean Sea Level, rounded to the nearest 0.1 meter.

ADDRESSES

Unincorporated Areas of Upshur County
Maps are available for inspection at the Upshur County Courthouse, 100 West Tyler Street, Gilmer, TX 75644.

(Catalog of Federal Domestic Assistance No. 97.022, "Flood Insurance.")

Dated: October 14, 2010.

Edward L. Connor,

Acting Federal Insurance and Mitigation Administrator, Department of Homeland Security, Federal Emergency Management Agency.

[FR Doc. 2010–26311 Filed 10–18–10; 8:45 am]

BILLING CODE 9110–12–P

DEPARTMENT OF COMMERCE

National Oceanic and Atmospheric Administration

50 CFR Part 622

[Docket No. 040205043–4043–01]

RIN 0648–XY49

Fisheries of the Caribbean, Gulf of Mexico, and South Atlantic; Reef Fish Fishery of the Gulf of Mexico; Closure of the 2010 Gulf of Mexico Commercial Sector for Greater Amberjack

AGENCY: National Marine Fisheries Service (NMFS), National Oceanic and Atmospheric Administration (NOAA), Commerce.

ACTION: Temporary rule; closure.

SUMMARY: NMFS closes the commercial sector for greater amberjack in the exclusive economic zone (EEZ) of the Gulf of Mexico (Gulf). NMFS has determined that the commercial greater amberjack quota will have been reached by October 28, 2010. This closure is necessary to prevent overfishing of Gulf greater amberjack.

DATES: Closure is effective 12:01 a.m., local time, October 28, 2010, until 12:01 a.m., local time, on January 1, 2011.

FOR FURTHER INFORMATION CONTACT: Catherine Bruger, telephone 727–551–5727, fax 727–824–5308, e-mail *Catherine.Bruger@noaa.gov.*

SUPPLEMENTARY INFORMATION: The reef fish fishery of the Gulf of Mexico is managed under the Fishery Management Plan for the Reef Fish Resources of the Gulf of Mexico (FMP). The FMP was prepared by the Gulf of Mexico Fishery Management Council and is implemented under the authority of the Magnuson-Stevens Fishery Conservation and Management Act (Magnuson-Stevens Act) by regulations at 50 CFR part 622. The regulations set the commercial quota for greater amberjack in the Gulf at 503,000 lb (228,157 kg), round weight, however in 2009, the commercial quota was exceeded by 129,928 lb (58,934 kg), and, therefore, a reduced quota of 373,072 lb (169,222 kg) was implemented for the 2010 fishing year.

Background

Constraining harvest to the quota is crucial to meeting the legal requirements to prevent and end overfishing and rebuild greater amberjack in the Gulf. On August 4, 2008, new fishing regulations were implemented by NMFS (73 FR 38139) to reduce the harvest and discard of greater amberjack in the Gulf reef fish fishery. Regulatory changes for commercial greater amberjack included implementing a quota of 503,000 lb (228,157 kg), round weight and accountability measures.

The accountability measures state, as described in § 622.49(a)(1)(i), when the applicable commercial quota is reached, or projected to be reached, the Assistant Administrator for Fisheries, NOAA (AA), will close the commercial sector of greater amberjack for the remainder of the fishing year. If despite such closure, commercial landings exceed the quota, the AA will reduce the quota the year following an overage by the amount of the overage of the prior fishing year.

NMFS published a temporary rule on June 22, 2010 (75 FR 35335) to implement the 2010 accountability measures for Gulf greater amberjack, including a reduced 2010 commercial quota and an estimated season length for the 2010 recreational sector. In 2009, the commercial sector of greater amberjack was closed on November 7, when the commercial quota of 503,000 lb (228,157 kg) was determined to be reached. Finalized 2009 commercial landings data determined the commercial quota was exceeded by 25.8 percent, or 129,928 lb (58,934 kg). Therefore, in accordance with the accountability measures, the reduced 2010 commercial quota for Gulf greater amberjack is 373,072 lb (169,222 kg).

Under 50 CFR 622.43(a), NMFS is required to close harvest for a species or species group when the quota for that species or species group is reached, or is projected to be reached, by filing a notification to that effect with the Office of the Federal Register. Based on current statistics, NMFS has determined that the available commercial quota of 373,072 lb (169,222 kg), round weight for greater amberjack will be reached on or before October 28, 2010. Accordingly, NMFS is closing commercial harvest of greater amberjack in the Gulf EEZ from 12:01 a.m., local time, on October 28, 2010, until 12:01 a.m., local time, on January 1, 2011. The operator of a vessel with a valid commercial vessel permit for Gulf reef fish having greater amberjack aboard must have landed and bartered, traded, or sold such greater amberjack prior to 12:01 a.m., local time, October 28, 2010.

During the closure, all harvest or possession of greater amberjack in or from the Gulf of Mexico EEZ, and the sale or purchase of greater amberjack taken from the EEZ is prohibited. The prohibition on sale or purchase does not apply to sale or purchase of greater amberjack that were harvested, landed ashore, and sold prior to 12:01 a.m., local time, October 28, 2010, and were held in cold storage by a dealer or processor. In addition to the Gulf EEZ closure, a person on board a vessel for which a commercial vessel permit for Gulf reef fish has been issued must comply with these closure provisions regardless of where the Gulf greater amberjack are harvested, i.e., in state or Federal waters. This closure is intended to prevent overfishing of Gulf greater amberjack and increase the likelihood that the 2010 quota will not be exceeded.

Classification

This action responds to the best available information recently obtained from the fishery. The AA finds good cause to waive the requirement to provide prior notice and opportunity for public comment pursuant to the authority set forth at 5 U.S.C. 553(b)(3)(B). Such procedures would be unnecessary because the rule implementing the quota and the associated requirement for closure of commercial harvest when the quota is reached or projected to be reached already has been subject to notice and comment, and all that remains is to notify the public of the closure.

Providing prior notice and opportunity for public comment on this action would be contrary to the public interest because any delay in the closure of commercial harvest could result in the commercial quota for greater amberjack being exceeded, which in turn, would trigger the accountability measure for greater amberjack. The accountability measure would require NMFS to reduce the quota for the following year by the amount of the quota overage from the prior fishing year. Reducing the quota the following year would produce additional adverse economic impacts for Gulf reef fish fishermen. There is a need to implement this measure in a timely fashion to prevent a quota overrun of the commercial greater amberjack sector, given the capacity of the fishing fleet to harvest the quota quickly.

For the aforementioned reasons, the AA also finds good cause to waive the

30-day delay in the effectiveness of this action under 5 U.S.C. 553(d)(3).

This action is taken under 50 CFR 622.43(a) and is exempt from review under Executive Order 12866.

Authority: 16 U.S.C. 1801 *et seq.*

Dated: October 14, 2010.

Emily H. Menashes,

Acting Director, Office of Sustainable Fisheries, National Marine Fisheries Service.

[FR Doc. 2010–26284 Filed 10–14–10; 4:15 pm]

BILLING CODE 3510–22–P

DEPARTMENT OF COMMERCE

National Oceanic and Atmospheric Administration

50 CFR Part 679

[Docket No. 0910131362–0087–02]

RIN 0648–XZ81

Fisheries of the Exclusive Economic Zone Off Alaska; Pollock in Statistical Area 610 of the Gulf of Alaska

AGENCY: National Marine Fisheries Service (NMFS), National Oceanic and Atmospheric Administration (NOAA), Commerce.

ACTION: Temporary rule; modification of a closure.

SUMMARY: NMFS is opening directed fishing for pollock in Statistical Area 610 of the Gulf of Alaska (GOA) for 72 hours. This action is necessary to fully use the 2010 total allowable catch (TAC) of pollock specified for Statistical Area 610 of the GOA.

DATES: Effective 1200 hrs, Alaska local time (A.l.t.), October 14, 2010, through 1200 hrs, A.l.t., October 17, 2010. Comments must be received at the following address no later than 4:30 p.m., A.l.t., October 29, 2010.

ADDRESSES: Send comments to Sue Salveson, Assistant Regional Administrator, Sustainable Fisheries Division, Alaska Region, NMFS, Attn: Ellen Sebastian. You may submit comments, identified by 0648–XZ81, by any one of the following methods:

- *Electronic Submissions:* Submit all electronic public comments via the Federal eRulemaking Portal Web site at *http://www.regulations.gov.*
- *Mail:* P.O. Box 21668, Juneau, AK 99802.
- *Fax:* (907) 586–7557.
- *Hand delivery to the Federal Building:* 709 West 9th Street, Room 420A, Juneau, AK.

All comments received are a part of the public record and will generally be posted to *http://www.regulations.gov* without change. All Personal Identifying Information (*e.g.,* name, address) voluntarily submitted by the commenter may be publicly accessible. Do not submit Confidential Business Information or otherwise sensitive or protected information.

NMFS will accept anonymous comments (enter N/A in the required fields, if you wish to remain anonymous). Attachments to electronic comments will be accepted in Microsoft Word, Excel, WordPerfect, or Adobe portable document file (pdf) formats only.

FOR FURTHER INFORMATION CONTACT: Josh Keaton, 907–586–7228.

SUPPLEMENTARY INFORMATION: NMFS manages the groundfish fishery in the GOA exclusive economic zone according to the Fishery Management Plan for Groundfish of the Gulf of Alaska (FMP) prepared by the North Pacific Fishery Management Council under authority of the Magnuson-Stevens Fishery Conservation and Management Act. Regulations governing fishing by U.S. vessels in accordance with the FMP appear at subpart H of 50 CFR part 600 and 50 CFR part 679.

NMFS closed the directed fishery for pollock in Statistical Area 610 of the GOA under § 679.20(d)(1)(iii) on October 9, 2010 (publication in the **Federal Register** pending).

NMFS has determined that approximately 900 metric tons of pollock remain in the directed fishing allowance. Therefore, in accordance with § 679.25(a)(1)(i), (a)(2)(i)(C), and (a)(2)(iii)(D), and to fully utilize the 2010 TAC of pollock in Statistical Area 610, NMFS is terminating the previous closure and is reopening directed fishing for pollock in Statistical Area 610 of the GOA. This will enhance the socioeconomic well-being of harvesters dependent upon pollock in this area. The Administrator, Alaska Region (Regional Administrator) considered the following factors in reaching this decision: (1) The current catch of pollock by the GOA trawl sector and, (2) the harvest capacity and stated intent on future harvesting patterns of vessels participating in this fishery.

In accordance with § 679.20(d)(1)(iii), the Regional Administrator finds that this directed fishing allowance will be reached after 72 hours. Consequently, NMFS is prohibiting directed fishing for pollock in Statistical Area 610 of the GOA effective 1200 hrs, A.l.t., October 17, 2010.

Classification

This action responds to the best available information recently obtained from the fishery. The Assistant Administrator for Fisheries, NOAA (AA), finds good cause to waive the requirement to provide prior notice and opportunity for public comment pursuant to the authority set forth at 5 U.S.C. 553(b)(B) as such requirement is impracticable and contrary to the public interest. This requirement is impracticable and contrary to the public interest as it would prevent NMFS from responding to the most recent fisheries data in a timely fashion and would delay the opening of pollock in Statistical Area 610 of the GOA. NMFS was unable to publish a notice providing time for public comment because the most recent, relevant data only became available as of October 13, 2010.

The AA also finds good cause to waive the 30-day delay in the effective date of this action under 5 U.S.C. 553(d)(3). This finding is based upon the reasons provided above for waiver of prior notice and opportunity for public comment.

Without this inseason adjustment, NMFS could not allow the fishery for pollock in Statistical Area 610 of the GOA to be harvested in an expedient manner and in accordance with the regulatory schedule. Under § 679.25(c)(2), interested persons are invited to submit written comments on this action to the above address until October 29, 2010.

This action is required by § 679.20 and § 679.25 and is exempt from review under Executive Order 12866.

Authority: 16 U.S.C. 1801 *et seq.*

Dated: October 14, 2010.

Emily H. Menashes,

Acting Director, Office of Sustainable Fisheries, National Marine Fisheries Service.

[FR Doc. 2010–26274 Filed 10–14–10; 4:15 pm]

BILLING CODE 3510–22–P

Proposed Rules

Federal Register

Vol. 75, No. 201

Tuesday, October 19, 2010

This section of the FEDERAL REGISTER contains notices to the public of the proposed issuance of rules and regulations. The purpose of these notices is to give interested persons an opportunity to participate in the rule making prior to the adoption of the final rules.

DEPARTMENT OF ENERGY

10 CFR Parts 429, 430 and 431

[Docket No. EERE–2010–BT–CE–0014]

RIN 1904–AC23

Energy Conservation Program: Certification, Compliance, and Enforcement for Consumer Products and Commercial and Industrial Equipment

AGENCY: Office of Energy Efficiency and Renewable Energy, Department of Energy.

ACTION: Proposed rule; extension of comment period.

SUMMARY: This document announces an extension of the time period for submitting written comments on the notice of proposed rulemaking, regarding the Energy Conservation Program: Certification, Compliance, and Enforcement for Consumer Products and Commercial and Industrial Equipment. The comment period is extended to October 29, 2010.

DATES: The comment period for the proposed rule published on September 16, 2010 (75 FR 56796) is extended to October 29, 2010.

ADDRESSES: Interested persons are encouraged to submit comments using the Federal eRulemaking Portal at *http://www.regulations.gov.* Follow the instructions for submitting comments. Alternatively, interested persons may submit comments, identified by docket number EERE–2010–BT–CE–0014, by any of the following methods:

- *E-mail: CCE–2010–BT–CE–0014@ee.doe.gov.* Include EERE–2010–BT–CE–0014 in the subject line of the message.
- *Mail:* Ms. Brenda Edwards, U.S. Department of Energy, Building Technologies Program, Mailstop EE–2J, Revisions to Energy Efficiency Enforcement Regulations, EERE–2010–BT–CE–0014, 1000 Independence Avenue, SW., Washington, DC 20585–0121. Phone: (202) 586–2945. Please submit one signed paper original.
- *Hand Delivery/Courier:* Ms. Brenda Edwards, U.S. Department of Energy, Building Technologies Program, 6th Floor, 950 L'Enfant Plaza, SW., Washington, DC 20024. Phone: (202) 586–2945. Please submit one signed paper original.

Instructions: All submissions received must include the agency name and docket number or RIN for this rulemaking. Note that all comments received will be posted without change, including any personal information provided.

Docket: For access to the docket to read background documents, or comments received, go to the Federal eRulemaking Portal at *http://www.regulations.gov.*

FOR FURTHER INFORMATION CONTACT: Ashley Armstrong, 202–586–6590, e-mail: *Ashley.Armstrong@ee.doe.gov,* or Celia Sher, Esq., 202–287–6122, e-mail: *Celia.Sher@hq.doe.gov.*

SUPPLEMENTARY INFORMATION: The U.S. Department of Energy (DOE) proposed revisions to its existing certification, compliance, and enforcement regulations for certain consumer products and commercial and industrial equipment covered under the Energy Policy and Conservation Act of 1975, as amended (EPCA or the "Act"), in a notice of proposed rulemaking (NOPR) published in the **Federal Register** on September 16, 2010. 75 FR 56796. These regulations provide for sampling plans used in determining compliance with existing standards, manufacturer submission of compliance statements and certification reports to DOE, maintenance of compliance records by manufacturers, and the availability of enforcement actions for improper certification or noncompliance with an applicable standard. The NOPR informed interested parties that DOE would accept written comments through October 18, 2010.

The Air-Conditioning, Heating, and Refrigeration Institute (AHRI) requested an extension of the time to submit comments. In its request, AHRI stated that the additional time is necessary for AHRI and its members to properly respond to the questions and issues raised in the proposed rule given the potential impact of the proposed rule on the air conditioning, heating and refrigeration industry.

Based on AHRI's request and the number of questions and issues raised during the public meeting, DOE believes that extending the comment period to allow additional time for interested parties to submit comments is appropriate. Therefore, DOE is extending the comment period until October 29, 2010 to provide interested parties additional time to prepare and submit comments. DOE will accept comments received no later than October 29, 2010 and will not consider any further extensions to the comment period.

Issued in Washington, DC, on October 13, 2010.

Cathy Zoi,

Assistant Secretary, Energy Efficiency and Renewable Energy.

[FR Doc. 2010–26230 Filed 10–18–10; 8:45 am]

BILLING CODE 6450–01–P

FEDERAL DEPOSIT INSURANCE CORPORATION

12 CFR Part 380

Notice of Proposed Rulemaking Implementing Certain Orderly Liquidation Authority Provisions of the Dodd-Frank Wall Street Reform and Consumer Protection Act

AGENCY: Federal Deposit Insurance Corporation (FDIC).

ACTION: Notice of proposed rulemaking.

SUMMARY: The FDIC is proposing a rule ("Proposed Rule "), with request for comments, which would implement certain provisions of its authority to resolve covered financial companies under Title II of the Dodd-Frank Wall Street Reform and Consumer Protection Act (the "Dodd-Frank Act") (July 21, 2010). The FDIC's intent in issuing this Proposed Rule is to provide greater clarity and certainty about how key components of this authority will be implemented and to ensure that the liquidation process under Title II reflects the Dodd-Frank Act's mandate of transparency in the liquidation of failing systemic financial companies.

DATES: Written comments on the Proposed Rule and questions on that rule must be received by the FDIC not later than November 18, 2010. Written responses to the additional questions posed by the FDIC must be received by the FDIC not later than January 18, 2011.

ADDRESSES: You may submit comments by any of the following methods:

- *Agency Web Site: http:www.fdic.gov/regulations/laws/federal.* Follow instructions for submitting comments on the Agency Web Site.
- *E-mail: Comments@FDIC.gov.* Include "Orderly Liquidation" in the subject line of the message.
- *Mail:* Robert E. Feldman, Executive Secretary, Attention: Comments, Federal Deposit Insurance Corporation, 550 17th Street, NW., Washington, DC 20429.
- *Hand Delivery/Courier:* Guard station at the rear of the 550 17th Street Building (located on F Street) on business days between 7 a.m. and 5 p.m. (EDT).
- *Federal eRulemaking Portal: http://www.regulations.gov.* Follow the instructions for submitting comments.
- *Public Inspection:* All comments received will be posted without change to *http://www.fdic.gov/regulations/laws/federal* including any personal information provided. Paper copies of public comments may be ordered from the Public Information Center by telephone at (877) 275–3342 or (703) 562–2200.

FOR FURTHER INFORMATION CONTACT: Michael Krimminger, Office of the Chairman, 202–898–8950; R. Penfield Starke, Legal Division, 703–562–2422; Federal Deposit Insurance Corporation, 550 17th Street, NW., Washington, DC 20429.

SUPPLEMENTARY INFORMATION:

I. Background

Prior to the enactment of the Dodd-Frank Act, Public Law 111–203, 12 U.S.C. 5301 *et seq.,* on July 21, 2010, there was no common or adequate statutory scheme for the orderly liquidation of a financial company whose failure could adversely affect the financial stability of the United States. Instead, insured depository institutions were subject to an FDIC-administered receivership under applicable provisions of the Federal Deposit Insurance Act ("FDI Act"), insurance companies were subject to insolvency proceedings under individual State's laws, registered brokers and dealers were subject to the U.S. Bankruptcy Code and proceedings under the Securities Investor Protection Act, and other companies (including the parent holding company of one or more insured depository institutions or other financial companies) were eligible to be a debtor under the U.S. Bankruptcy Code. These disparate insolvency regimes were found to be inadequate to effectively address the actual or potential failure of a financial company that could adversely affect economic conditions or financial stability in the United States. In such a case, financial support for the company sometimes was the only viable option available for the Federal government to avoid or mitigate serious adverse effects on economic conditions and financial stability that could result from the company's failure.

With the enactment of the Dodd-Frank Act, Federal regulators have the tools to resolve a failing financial company that poses a significant risk to the financial stability of the United States. The receivership process established under Title II of the Dodd-Frank Act provides for an orderly liquidation of such a "covered financial company" in a way that addresses the concerns and interests of legitimate creditors while also protecting broader economic and taxpayer interests.

Appointment of Receiver

Title II of the Dodd-Frank Act provides a process for the appointment of the FDIC as receiver of a failing financial company that poses significant risk to the financial stability of the United States (a "covered financial company"). Under this process, certain designated Federal regulatory agencies must recommend to the Secretary of the Treasury (the "Secretary") that the Secretary, after consultation with the President, make a determination that grounds exist to appoint the FDIC as receiver of the company. The Federal Reserve Board and the Securities and Exchange Commission will make the recommendation if the company or its largest U.S. subsidiary is a broker or a dealer; the Federal Reserve Board and the Director of the Federal Insurance Office will make the recommendation if the company or its largest subsidiary is an insurance company; and the Federal Reserve Board and the FDIC will make the recommendation in all other cases. This procedure is similar to that which is applied to systemic risk determinations under section 13 of the FDI Act (12 U.S.C. 1823(c)(4)).

The Dodd-Frank Act requires that recommendations to the Secretary include an evaluation of whether the covered financial company is in default or in danger of default, a description of the effect that the company's default would have on the financial stability of the United States, and an evaluation of why a case under the Bankruptcy Code would not be appropriate. In determining whether the FDIC should be appointed as receiver, the Secretary must make specific findings in support, including: that the company is in default or in danger of default; that the failure of the company and its resolution under otherwise applicable Federal or State law would have serious adverse effects on financial stability in the United States; no viable private sector alternative is available; any effect on the claims or interests of creditors, counterparties, and shareholders is appropriate; any action under the liquidation authority will avoid or mitigate such adverse effects taking into consideration the effectiveness of the action in mitigating the potential adverse effects on the financial system, cost to the general fund of the Treasury, and the potential to increase excessive risk taking; a Federal regulatory agency has ordered the company to convert all of its convertible debt instruments that are subject to regulatory order; and the company satisfies the definition of a financial company under the law.

If the Secretary makes the recommended determination and the board of directors (or similar governing body) of the company acquiesces or consents to the appointment, then the FDIC's appointment as receiver is effective immediately. If the company's governing body does not acquiesce or consent, the Dodd-Frank Act provides for immediate judicial review by the United States District Court for the District of Columbia of whether the Secretary's determinations that the covered financial company is in default or danger of default and that it meets the definition of financial company under Title II are arbitrary and capricious.[1] If the court upholds the Secretary's determination, it will issue an order authorizing the Secretary to appoint the FDIC as receiver.[2] If the court fails to act within twenty-four hours of receiving the petition, then the appointment of the receiver takes effect by operation of law.

Orderly Liquidation

Title II of the Dodd-Frank Act (entitled "Orderly Liquidation Authority") also defines the policy goals of the liquidation proceedings and provides the powers and duties of the FDIC as receiver for a covered financial

[1] The immediate judicial review required by the Dodd-Frank Act contrasts with the analogous provisions in the National Bank Act (12 U.S.C. 191(b)), the Home Owner's Loan Act (12 U.S.C. 1464(c)(2)(B)), and the Federal Deposit Insurance Act (12 U.S.C. 1821(c)(7)). Each of these statutes permits judicial review of the appointment of the receiver, but only after the appointment has taken effect.

[2] If the court overrules the Secretary's determination, the Secretary is provided the opportunity to amend and refile the petition immediately. The Dodd-Frank Act includes appeal provisions, but does not provide for a stay of the actions taken by the receiver after its appointment.

company. Section 204(a)[3] succinctly summarizes those policy goals as the liquidation of "failing financial companies that pose a significant risk to the financial stability of the United States in a manner that mitigates such risk and minimizes moral hazard." The statute goes on to say that "creditors and shareholders will bear the losses of the financial company" and the FDIC is instructed to liquidate the covered financial company in a manner that maximizes the value of the company's assets, minimizes losses, mitigates risk, and minimizes moral hazard. *See* sections 204(a) and 210(a)(9)(E). Fundamentally, a liquidation under the Dodd-Frank Act is a liquidation of the company that imposes the losses on its creditors and shareholders. Not only is the FDIC prohibited from taking an equity interest in or becoming a shareholder of a covered financial company or any covered subsidiary, but other provisions of the Dodd-Frank Act bar any Federal government bail-out of a covered financial company. *See* section 210(h)(3)(B). In this way, the statute will prevent any future taxpayer bailout by providing a liquidation process that will prevent a disorderly collapse, while ensuring that taxpayers bear none of the costs.

Similarly, management, directors, and third parties who are responsible for the company's failing financial condition will be held accountable. The FDIC must remove any management and members of the board of directors of the company who are responsible for the failing condition of the covered financial company. *See* section 206.

While ensuring that creditors bear the losses of the company's failure under a specific claims priority, Title II incorporates procedural and other protections for creditors to ensure that they are treated fairly. For example, creditors can file a claim with the receiver and, if dissatisfied with the decision, may file a case in U.S. district court in which no deference is given to the receiver's decision. *See* section 210(a)(2)–(4). Once claims are proven, the FDIC has the authority to make interim payments to the creditors, consistent with the priority for payment of their allowed claims, as it does in resolutions of insured depository institutions. This accelerated or advance dividend authority, provided in section 210(a)(7), is a valuable tool to provide payments to creditors and lessen the economic and financial impact of the liquidation. In addition, creditors also are guaranteed that they will receive no less than the amount they would have received if the covered financial company had been liquidated under Chapter 7 of the Bankruptcy Code. *See* section 210(a)(7)(B) and (d)(2)(B). Shareholders of a covered financial company will not receive payment until after all other claims are fully paid. *See* section 210(b)(1). This helps ensure that the priority of payments will be enforced.

Parties who are familiar with the liquidation of insured depository institutions under the FDI Act or the liquidation of companies under the Bankruptcy Code will recognize many parallel provisions in Title II. Some provisions are drawn from analogous provisions of the Bankruptcy Code in order to clarify and supplement the authority that the FDIC normally exercises in a bank receivership. The provisions of Title II governing the claims process (including the availability of judicial review of claims disallowed by the receiver), the termination or repudiation of contracts, and the treatment of qualified financial contracts are modeled after the FDI Act, while provisions that empower the FDIC to avoid and recover fraudulent transfers, preferential transfers, and unauthorized transfers of property by the covered financial company are drawn from Bankruptcy Code provisions. The rules of Title II governing the setoff of mutual debt provide equivalent protections to those under the Bankruptcy Code.

The liquidation rules of Title II are designed to create parity in the treatment of creditors with the Bankruptcy Code and other normally applicable insolvency laws. This is reflected in the direct mandate in section 209 of the Dodd-Frank Act to "to seek to harmonize applicable rules and regulations promulgated under this section with the insolvency laws that would otherwise apply to a covered financial company." One of the goals of the Proposed Rule would be to begin the implementation of this mandate in certain key areas. Of particular significance is § 380.2 of the Proposed Rule, which clarifies that the authority to make additional payments to certain creditors will never be used to provide additional payments, beyond those appropriate under the defined priority of payments, to shareholders, subordinated debt holders, and bondholders. The FDIC, in this Proposed Rule, is proposing that the creditors of the covered financial company will never meet the statutory criteria for receiving such additional payments.

Fundamental to an orderly liquidation of a covered financial company is the ability to continue key operations, services, and transactions that will maximize the value of the firm's assets and avoid a disorderly collapse in the market place. The FDIC has long had authority under the Federal Deposit Insurance Act to continue operations after the closing of failed insured banks if necessary to maximize the value of the assets in order to achieve the "least costly" resolution or to prevent "serious adverse effects on economic conditions or financial stability." 12 U.S.C. 1821(d) and 1823(c). Under the Dodd-Frank Act, the corresponding ability to continue key operations, services, and transactions is accomplished, in part, through authority for the FDIC to charter a bridge financial company. The bridge financial company is a completely new entity that will not be saddled with the shareholders, debt, senior executives or bad assets and operations that contributed to the failure of the covered financial company or that would impede an orderly liquidation. Shareholders, debt holders, and creditors will receive "haircuts" based on a clear priority of payment set out in section 210(b). As in prior bridge banks used in the resolution of large insured depository institutions, however, the bridge financial company authority will allow the FDIC to stabilize the key operations of the covered financial company by continuing valuable, systemically important operations.

This authority is an important tool for the elimination of "too big to fail" because it provides the FDIC with the authority to prevent a disorderly collapse, while ensuring that bail-outs of failing companies will not occur. However, overly broad application of this authority could lead creditors to assume that they will be protected and impair the needed market discipline. For this reason, it is essential that the FDIC clarify that certain categories of creditors will never receive additional payments under this authority, that all unsecured and under-secured creditors of the failed company should expect that they will incur losses, and that the statutory standards for application of this authority will be rigorously applied in the liquidation of a covered financial company.

To emphasize that all unsecured creditors should expect to absorb losses along with other creditors, the Proposed Rule clarifies the narrow circumstances under which creditors could receive any additional payments or credit amounts under Sections 210(b)(4), (d)(4), or (h)(5)(E). Under the Proposed Rule, such payments or credit amounts could be

[3] Unless the context requires otherwise, all section references are to the Dodd-Frank Act.

provided to a creditor only if the FDIC Board of Directors, by a recorded vote, determines that the payments or credits are necessary and meet the requirements of Sections 210(b)(4), (d)(4), or (h)(5)(E), as applicable. The Proposed Rule further provides that the authority of the Board to make this decision cannot be delegated to management or staff of the FDIC. By requiring a vote by the Board, the Proposed Rule will require a decision on the record and ensure that the governing body of the FDIC has made a specific determination that such payments are necessary to the essential operations of the receivership or bridge financial company, to maximize the value of the assets or returns from sale, or to minimize losses.

Assets and operations that are necessary to maximize the value in the liquidation or prevent a disorderly collapse can be continued seamlessly through the bridge financial company. This is supported by the clear statutory provisions that contracts transferred to the bridge financial company cannot be terminated simply because they are assumed by the bridge financial company. *See* section 210(c)(10). As in the FDI Act, the FDIC has the authority to require contracting parties to continue to perform under their contracts if the contracts are needed to continue operations transferred to the bridge. Under the Dodd-Frank Act, the contracting parties must continue to perform so long as the bridge company continues to perform. In contrast to the Bankruptcy Code, the FDIC under the Dodd-Frank Act can similarly require parties to financial market contracts to continue to perform so long as statutory notice of the transfer is provided within one business day after the FDIC is appointed as receiver. This is an important tool to allow the FDIC to maximize the value of the failed company's assets and operations and to avoid market destabilization. This authority will help preserve the value of the company by allowing continuation of critical business operations. If financial market contracts are transferred to the bridge company, it also can prevent the immediate and disorderly liquidation of collateral during a period of market distress. This cannot be done under the Bankruptcy Code. The absence of funding for continuing valuable contracts and the rights of counterparties under the Bankruptcy Code to immediately terminate those contracts resulted in a loss of billions of dollars in market value to the bankruptcy estate in the Lehman insolvency.[4]

The bridge financial company arrangement will provide a timely, efficient, and effective means for preserving value in an orderly liquidation and avoiding a destabilizing and disorderly collapse. While the covered financial company's board of directors and the most senior management responsible for its failure will be replaced, as required by section 204(a)(2), operations would be continued by the covered financial company's employees under the strategic direction of the FDIC and contractors employed by the FDIC to help oversee those operations. Section 380.2 of the Proposed Rule addresses the treatment of these employees.

To achieve these goals, the FDIC is given broad authority under the Dodd-Frank Act to operate or liquidate the business, sell the assets, and resolve the liabilities of a covered financial company immediately after its appointment as receiver or as soon as conditions make this appropriate. This authority will enable the FDIC to act immediately to sell assets of the covered financial company to another entity or, if that is not possible, to an FDIC-created bridge financial company while maintaining critical functions. In receiverships of insured depository institutions, the ability to act quickly and decisively has been found to reduce losses to the deposit insurance funds while maintaining key banking services for depositors and businesses, and it is expected to be equally crucial in resolving non-bank financial firms under the Dodd-Frank Act.

A vital element in a prompt sale to other private sector companies or the continuation of essential operations in the bridge financial company is the availability of funding for those operations. The liquidity available under the Dodd-Frank Act will allow both sales at better value and a more orderly liquidation. The Act provides that the FDIC may borrow funds from the Department of the Treasury to provide liquidity for the operations of the receivership and the bridge financial company. *See* sections 204(d) and 210(n). The bridge financial company also can access debtor-in-possession financing as needed. Once the new bridge financial company's operations have stabilized as the market recognizes that it has adequate funding and will continue key operations, the FDIC would move as expeditiously as possible to sell operations and assets back into the private sector.

Extensive pre-planning is essential for the effective use of these powers. Advance planning will improve the likelihood that the assets or operations of a failed financial company can be sold immediately or shortly after creation of the bridge financial company to other private sector companies. This should be an expected product of the advance planning mandates of the Dodd-Frank Act. Those mandates will require both regulators and senior management of large, complex financial companies to focus more intently on enhancing the resiliency and resolvability of the companies' operations. This, in turn, will improve the efficiency and speed at which those operations can be transferred to other private companies and both greatly enhance the effectiveness of crisis management and reduce the extent of governmental intervention in the resolution of any future crisis.

Such advance planning, a well-developed resolution plan, and access to the supporting information needed to undertake such planning has been a critical component of the FDIC's ability to smoothly resolve failing banks. This critical issue is addressed in the Dodd-Frank Act in provisions that grant the FDIC back-up examination authority and require the largest companies to submit so-called "living wills" or resolution plans that will facilitate a rapid and orderly resolution of the company under the Bankruptcy Code. *See* section 165(d). An essential part of such plans will be to describe how this process can be accomplished without posing systemic risk to the public and the financial system. If the company cannot submit a credible resolution plan, the statute permits the FDIC and the Federal Reserve to jointly impose increasingly stringent requirements that, ultimately, can lead to divestiture of assets or operations identified by the FDIC and the Federal Reserve to facilitate an orderly resolution. The FDIC and the Federal Reserve will jointly adopt a rule to implement the resolution plan requirements of the Dodd-Frank Act. The availability of adequate information and the establishment of feasible resolution plans are all the more critical because the largest covered financial companies operate globally and their liquidation will necessarily involve coordination among regulators around the world.

To strengthen the foundation for effective resolutions, the FDIC also will promulgate other rules and provide additional guidance in consultation with the members of the Financial

[4] Examiner's Report, pg. 725, *http://lehmanreport.jenner.com/VOLUME%202.pdf.*

Stability Oversight Council to ensure a credible liquidation process that realizes the goal of ending "too big to fail" while enhancing market discipline.

This highlights another key component of preparedness: the necessity of advance planning with other potentially affected regulators internationally. The Dodd-Frank Act's framework for an orderly liquidation provides the United States with the vital elements to prevent contagion in any future crisis, while closing the firms and making the creditors and shareholders bear the losses. For this process to work most efficiently, however, it is essential that legal and policy reforms are adopted in key foreign jurisdictions so that the cross-border operations of the covered financial company can be liquidated consistently, cooperatively, and in a manner that maximizes their value and minimizes the costs and negative effects on the financial system. The key reforms involve recognition in the foreign legal and regulatory systems where the FDIC would control the company's assets and operations; and that the FDIC would have the authority, subject to appropriate assurances that the FDIC will meet ongoing commitments, to continue the covered financial company's operations to facilitate an orderly wind-down of the company. Through the framework provided by the Dodd-Frank Act, the FDIC is working to facilitate these reforms and is engaged with foreign regulators in the work required to improve cooperation and ensure a much better process is implemented in any future liquidation involving a cross-border company.

II. The Proposed Rule

Section 209 of the Dodd-Frank Act authorizes the FDIC, in consultation with the Financial Stability Oversight Council, to prescribe such rules and regulations as the FDIC considers necessary or appropriate to implement Title II. Section 209 also provides that, to the extent possible, the FDIC shall seek to harmonize such rules and regulations with the insolvency laws that would otherwise apply to a covered financial company. The purpose of the Proposed Rule is to provide guidance on certain key issues in order to provide clarity and certainty to the financial industry and to ensure that the liquidation process under Title II reflects the Dodd-Frank Act's mandate of transparency in the liquidation of failing systemic financial companies. In this notice of proposed rulemaking, the FDIC also is posing broad and specific questions to solicit public comment on potential additional issues that may require clarification in a broader notice of proposed rulemaking in the future.

The Proposed Rule addresses discrete issues within the following broad areas:

(1) The priority of payment to creditors (by defining categories of creditors who shall not receive any additional payments under section 210(b)(4), (d)(4), and (h)(5)(E));

(2) The authority to continue operations by paying for services provided by employees and others (by clarifying the payment for services rendered under personal services contracts);

(3) The treatment of creditors (by clarifying the measure of damages for contingent claims); and

(4) The application of proceeds from the liquidation of subsidiaries (by reiterating the current treatment under corporate and insolvency law that remaining shareholder value is paid to the shareholders of any subsidiary).

Section-by-Section Analysis

Definitions. Section 380.1 of the Proposed Rule provides that the terms "bridge financial company," "Corporation," "covered financial company," "covered subsidiary," "insurance company," and "subsidiary" would have the same meanings as in the Dodd-Frank Act.

Treatment of Similarly Situated Creditors. The Dodd-Frank Act permits the FDIC to pay certain creditors of a receivership more than similarly situated creditors if it is necessary to: (1) "Maximize the value of the assets"; (2) initiate and continue operations "essential to implementation of the receivership and any bridge financial company"; (3) "maximize the present value return from the sale or other disposition of the assets"; or (4) "minimize the amount of any loss" on sale or other disposition. The appropriate comparison for any additional payments received by some, but not all, creditors similarly situated is the amount that the creditors should have received under the priority of expenses and unsecured claims defined in Section 210(b) and other applicable law. In addition, the Dodd-Frank Act requires that all creditors of a class must receive no less than what they would have received in a case under Chapter 7 of the Bankruptcy Code. *See* section 210(d)(2)(B).

These provisions parallel authority the FDIC has long had under the Federal Deposit Insurance Act to continue operations after the closing of failed insured banks if necessary to maximize the value of the assets in order to achieve the "least costly" resolution or to prevent "serious adverse effects on economic conditions or financial stability." 12 U.S.C. 1821(d) and 1823(c). As is well illustrated by comparisons with some liquidations under the Bankruptcy Code, the inability to continue potentially valuable business operations can seriously impair the recoveries of creditors and increase the costs of the insolvency. In bank resolutions under the "least costly" requirement of the Federal Deposit Insurance Act, many institutions purchasing failed bank operations have paid a premium to acquire all deposits because of the recognized value attributable to acquiring ongoing depositor relationships. In those cases, the sale of all deposits to the acquiring institutions has maximized recoveries and minimized losses consistent with the "least costly" requirement.

The ability to maintain essential operations under the Dodd-Frank Act would be expected to similarly minimize losses and maximize recoveries in any liquidation, while avoiding a disorderly collapse. Examples of operations that may be essential to the implementation of the receivership or a bridge financial company include the payment of utility and other service contracts and contracts with companies that provide payments processing services. These and other contracts will allow the bridge company to preserve and maximize the value of the bridge financial company's assets and operations to the benefit of creditors, while preventing a disorderly and more costly collapse.

To clarify the application of these provisions and to ensure that certain categories of creditors cannot expect additional payments, § 380.2 of the Proposed Rule would define certain categories of creditors who never satisfy this requirement. Specifically, this section would put creditors of a potential covered financial company on notice that bond holders of such an entity that hold certain unsecured senior debt with a term of more than 360 days will not receive additional payments compared to other general creditors such as general trade creditors or any general or senior liability of the covered financial company, nor will exceptions be made for favorable treatment of holders of subordinated debt, shareholders or other equity holders. The rule focuses on long-term unsecured senior debt (*i.e.,* debt maturing more than 360 days after issuance) in order to distinguish bondholders from commercial lenders or other providers of financing who have made lines of credit available to the covered financial company that are

essential for its continued operation and orderly liquidation.

The treatment of long-term unsecured senior debt under the Proposed Rule is consistent with the existing treatment of such debt in bank receiverships. The FDIC has long had the authority to make additional payments to certain creditors after the closing of an insured bank under the Federal Deposit Insurance Act, 12 U.S.C. 1821(i)(3), where it will maximize recoveries and is consistent with the "least costly" resolution requirement or is necessary to prevent "serious adverse effects on economic conditions or financial stability." 12 U.S.C. 1821(d) and 1823(c). In applying this authority, the FDIC has not made additional payments to shareholders, subordinated debt, or long-term senior debt holders of banks placed into receivership because such payments would not have helped maximize recoveries or contribute to the orderly liquidation of the failed banks. This experience supports the conclusion that the Proposed Rule appropriately clarifies that shareholders, subordinated debt, or long-term senior debt holders of future non-bank financial institutions resolved under the Dodd-Frank Act should never receive additional payments under the authority of Sections 210(b)(4), (d)(4), or (h)(5)(E).

While the Proposed Rule would distinguish between long-term unsecured senior debt and shorter term unsecured debt, this distinction does not mean that shorter term debt will be provided with additional payments under sections 210(b)(4), (d)(4) or (h)(5)(E) of the Dodd-Frank Act. As general creditors, such debt holders normally will receive the amount established and due under section 210(b)(1), or other priorities of payment specified by law. While they may receive additional payments under the Proposed Rule, this will be evaluated on a case-by-case basis and will only occur when such payments meet all of the statutory requirements.

A major driver of the financial crisis and the panic experienced by the market in 2008 was in part due to an overreliance by many market participants on funding through short-term, secured transactions in the repurchase agreement market using volatile, illiquid collateral, such as mortgage-backed securities. In applying its powers under the Dodd-Frank Act, the FDIC must exercise a great deal of caution in valuing such collateral and will review the transaction to ensure it is not under-collateralized. Under applicable law, if the creditor is under-secured due to a drop in the value of such collateral, the unsecured portion of the claim will be paid as a general creditor claim. In contrast, if the collateral consists of U.S. Treasury securities or other government securities as collateral, the FDIC will value these obligations at par.

This provision must also be considered in concert with the express provisions of section 203(c)(3)(A)(vi). This subsection requires a report to Congress not later than 60 days after appointment of the FDIC as receiver for a covered financial company specifying "the identity of any claimant that is treated in a manner different from other similarly situated claimants," the amount of any payments and the reason for such action. In addition, the FDIC must post this information on a Web site maintained by the FDIC. These reports must be updated "on a timely basis" and no less frequently than quarterly. This information will provide other creditors with full information about such payments in a timely fashion that will permit them to file a claim asserting any challenges to the payments. The Dodd-Frank Act also includes the power to "claw-back" or recoup some or all of any additional payments made to creditors if the proceeds of the sale of the covered financial company's assets are insufficient to repay any monies drawn by the FDIC from Treasury during the liquidation. 12 U.S.C. 5390(o)(1)(D). This provision underscores the importance of a strict application of the authority provided in sections 210(b)(4), (d)(4), and (h)(5)(E) of the Dodd-Frank Act and will help ensure that if there is any shortfall in proceeds of sale of the assets the institution's creditors will be assessed before the industry as a whole. Most importantly, under no circumstances in a Dodd-Frank liquidation will taxpayers ever be exposed to loss.

The Proposed Rule would expressly distinguish between ongoing credit relationships with lenders who have provided lines of credit that are necessary for maintaining ongoing operations. Under section 210(c)(13)(D) of the Dodd-Frank Act, the FDIC can enforce lines of credit to the covered financial company and agree to repay the lender under the credit agreement. In some cases such lines of credit may be an integral part of key operations and be essential to help the FDIC maximize the value of the failed company's assets and operations. In such cases, it may be more efficient to continue such lines of credit and, if appropriate, reduce the demands for funding from the Orderly Liquidation Fund.

Personal Services Agreements. Section 380.3 of the Proposed Rule concerns personal services agreements, which would include, without limitation, collective bargaining agreements. Like other contracts with the covered financial company, a personal services agreement would be subject to repudiation by the receiver if the agreement is determined to be burdensome and its repudiation would promote the orderly liquidation of the company. Prior to determining whether to repudiate, however, the FDIC as receiver may need to utilize the services of employees who have a personal services agreement with the covered financial company. The Proposed Rule would provide that if the FDIC accepts services from employees during the receivership or any period where some or all of the operations of the covered financial company are continued by a bridge financial company, those employees would be paid according to the terms and conditions of their personal service agreement and such payments would be treated as an administrative expense of the receiver. The acceptance of services from the employees by the FDIC as receiver (or by a bridge financial company) would not impair the receiver's ability subsequently to repudiate a personal services agreement.[5] The Proposed Rule also would make clear that a personal service agreement would not continue to apply to employees in connection with a sale or transfer of a subsidiary or the transfer of certain operations or assets of the covered financial company unless the acquiring party expressly agrees to assume the personal service agreement. Likewise, the transfer would not be predicated on such assumption. Subparagraph (e) of § 380.3 would make clear that the provision for payment of employees would not apply to senior executives or directors of the covered financial company,[6] nor would it impair the ability of the receiver to recover compensation previously paid to senior executives or directors under section 210(s) of the Dodd-Frank Act. The definition of "senior executive" in this section substantially follows the

[5] In this regard, the Proposed Rule is consistent with the Federal Deposit Insurance Act regarding the treatment of personal service contracts (*see* 12 U.S.C. 1821(e)(7)).

[6] Section 213(d) of the Dodd-Frank Act requires the FDIC and the Board of Governors of the Federal Reserve System, after consultation with the Financial Stability Oversight Council, to prescribe, inter alia, "rules, regulations, or guidelines to further define the term "senior executive" for the purposes of that section, relating to the imposition of prohibitions on the participation of certain persons in the conduct of the affairs of a financial company. In the future, the FDIC would expect to conform the definition of "senior executive" in § 380.1 of the Proposed Rule to the definition that is adopted in the regulation that is adopted pursuant to section 213(d).

definition of "executive officer" in Regulation O of the Board of Governors of the Federal Reserve System (12 CFR 215.2). This definition is commonly understood and accepted.

Contingent Obligations. Section 380.4 of the Proposed Rule would recognize that contingent obligations are provable under the Dodd-Frank Act. *See* section 201(a)(4), defining the term "claim" to include a right of payment that is contingent, and section 210(c)(3)(E), providing for damages for repudiation of a contingent obligation in the form of a guarantee, letter of credit, loan commitment, or similar credit obligation. The Proposed Rule would apply to contingent obligations consisting of a guarantee, letter of credit, loan commitment, or similar credit obligation that becomes due and payable upon the occurrence of a specified future event. For an obligation to be considered contingent, the future event (i) cannot occur by the mere passage of time (*i.e.,* the arrival of a certain date on the calendar); (ii) cannot be made to occur (or not) by either party; and (iii) cannot have occurred as of the date of the appointment of the receiver. In addition, the FDIC holds the view that an obligation in the form of a guarantee or letter of credit is no longer contingent if the principal obligor (*i.e.,* the party whose obligation is backed by the guarantee or letter of credit) becomes insolvent or is the subject of insolvency proceedings.

Paragraph (b) of § 380.4 would recognize that contingent claims may be provable against the receiver. Thus, for example, where a guarantee or letter of credit becomes due and payable after the appointment of the receiver, the receiver will not disallow a claim solely because the obligation was contingent as of the date of the appointment of the receiver.

Paragraph (c) of § 380.4 would implement section 210(c)(3)(E), which authorizes the FDIC to promulgate rules and regulations providing that damages for repudiation of a contingent guarantee, letter of credit, loan commitment, or similar credit obligation shall be measured based upon the likelihood that such contingent obligation would become fixed and the probable magnitude of the claim.

Insurance Company Subsidiaries. Section 380.5 of the Proposed Rule would provide that where the FDIC acts as receiver for a direct or indirect subsidiary of an insurance company that is not an insured depository institution or an insurance company itself, the value realized from the liquidation or other resolution of the subsidiary will be distributed according to the priority of expenses and unsecured claims set forth in section 210(b)(1) of the Dodd-Frank Act. In order to clarify that such value will be available to the policyholders of the parent insurance company to the extent required by the applicable State laws and regulations, the Proposed Rule would expressly recognize the requirement that the receiver remit all proceeds due to the parent insurance company in accordance with the order of priority set forth in section 210(b)(1).

Liens on Insurance Company Assets. Section 380.6 of the Proposed Rule would limit the ability of the FDIC to take liens on insurance company assets and assets of the insurance company's covered subsidiaries, under certain circumstances after the FDIC has been appointed receiver. Section 204 of the Dodd-Frank Act permits the FDIC to provide funding for the orderly liquidation of covered financial companies and covered subsidiaries that the FDIC determines, in its discretion, are necessary or appropriate by, among other things, making loans, acquiring debt, purchasing assets or guaranteeing them against loss, assuming or guaranteeing obligations, making payments, or entering into certain transactions. In particular, pursuant to section 204(d)(4), the FDIC is authorized to take liens "on any or all assets of the covered financial company or any covered subsidiary, including a first priority lien on all unencumbered assets of the covered financial company or any covered subsidiary to secure repayment of any transactions conducted under this subsection."

Section 203(e) provides that, in general, if an insurance company is a covered financial company the liquidation or rehabilitation of such insurance company shall be conducted as provided under the laws and requirements of the State, either by the appropriate State regulatory agency, or by the FDIC if such regulatory agency has not filed the appropriate judicial action in the appropriate State court within sixty (60) days of the date of the determination that such insurance company satisfied the requirements for appointment of a receiver under section 202(a). However, a subsidiary or affiliate (including a parent entity) of an insurance company, where such subsidiary or affiliate is not itself an insurance company, will be subject to orderly liquidation under Title II without regard to State law.

The FDIC recognizes that the orderly liquidation of a covered financial company that is a covered subsidiary of, or an affiliate of, an insurance company should not unnecessarily interfere with the liquidation or rehabilitation of the insurance company under applicable State law, and that the interests of the policy holders in the assets of the insurance company should be respected. Accordingly, the FDIC is proposing that it will avoid taking a lien on some or all of the assets of a covered financial company that is an insurance company or a covered subsidiary or affiliate of an insurance company unless it makes a determination, in its sole discretion, that taking such a lien is necessary for the orderly liquidation of the company (or subsidiary or affiliate) and will not unduly impede or delay the liquidation or rehabilitation of such insurance company, or the recoveries by its policyholders. Subsection (b) of § 380.6 makes clear that no restriction on taking a lien on assets of a covered financial company or any covered subsidiary or affiliate would limit or restrict the ability of the FDIC or the receiver to take a lien on such assets in connection with the sale of such entities or any of their assets on a financed basis to secure any financing being provided in connection with such sale.

IV. Request for Comments

The FDIC requests comments on all aspects of the Proposed Rule. All comments and responses to the following questions on the Proposed Rule must be received by the FDIC not later than November 18, 2010. The FDIC specifically requests comments on the following specific questions:

1. Should "long-term senior debt" be defined in reference to a specific term, such as 270 or 360 days or some different term, or should it be defined through a functional definition?

2. Is the description of "partially funded, revolving or other open lines of credit" adequately descriptive? Is there a more effective definition that could be used? If so, what and how is it more effective?

3. Should there be further limits to additional payments or credit amounts that can be provided to shorter term general creditors? Are there further limits that should be applied to ensure that any such payments maximize value, minimize losses, or are to initiate and continue operations essential to the implementation of the receivership or any bridge financial company? If so, what limits should be applied consistent with other applicable provisions of law?

4. Under the Proposed Rule, the FDIC's Board of Directors must determine to make additional payments or credit amounts available to shorter term general creditors only if such payments or credits meet the standards

specified in 12 U.S.C. 5390(b)(4), (d)(4), and (h)(5)(E). Should additional requirements be imposed on this decision-making process for the Board? Should a super-majority be required?

5. Under the Dodd-Frank Act, secured creditors will be paid in full up to the extent of the pledged collateral and the proposed rule specifies that direct obligations of, or that are fully guaranteed by, the United States or any agency of the United States shall be valued for such purposes at par value. How should other collateral be valued in determining whether a creditor is fully secured or partially secured?

6. During periods of market disruption, the liquidation value of collateral may decline precipitously. Since creditors are normally held to a duty of commercially reasonable disposition of collateral [Uniform Commercial Code], should the FDIC adopt a rule governing valuation of collateral other than United States or agency collateral? Would a valuation based on a rolling average prices, weighted by the volume of sales during the month preceding the appointment of the receiver, provide more certainty to valuation of other collateral? Would that help reduce the incentives to quickly liquidate collateral in a crisis?

7. Are changes necessary to the provisions of proposed Section 380.3 through 380.6? What other specific issues addressed in these sections should be addressed in the proposed rule or in future proposed rules?

In addition, the FDIC specifically requests responses to the following questions. Written responses to the specific questions posed by the FDIC must be received by the FDIC not later than January 18, 2011.

1. What other specific areas relating to the FDIC's orderly liquidation authority under Title II would benefit from additional rulemaking?

2. Section 209 of the Dodd-Frank Act requires the FDIC, "[t]o the extent possible," "to harmonize applicable rules and regulations promulgated under this section with the insolvency laws that would otherwise apply to a covered financial company." What are the key areas of Title II that may require additional rules or regulations in order to harmonize them with otherwise applicable insolvency laws? In your answer, please specify the source of insolvency laws to which you are making reference.

3. With the exception of the special provisions governing the liquidation of covered brokers and dealers (*see* section 205), are there different types of covered financial companies that require different rules and regulations in the application of the FDIC's powers and duties?

4. Section 210 specifies the powers and duties of the FDIC acting as receiver under Title II. Are regulations necessary to define how these specific powers should be applied in the liquidation of a covered company?

5. Should the FDIC adopt regulations to define how claims against the covered financial company and the receiver are determined under section 210(a)(2)? What specific elements of this process require clarification?

6. Should the FDIC adopt regulations governing the avoidable transfer provisions of section 210(a)(11)? What are the most important issues to address for the fraudulent transfer provisions? What are the most important issues to address for the preferential transfers provisions? How should these issues be addressed?

7. What are the key issues that should be addressed to clarify the application of the setoff provisions in section 210(a)(12)? How should these issues be addressed?

8. Do the provisions governing the priority of payments of expenses and claims in section 210(b) and other sections require clarification? If so, what are the key issues to clarify in any regulation?

9. Section 210(b)(4), (d)(4), and (h)(5)(E) address potential payments to creditors "similarly situated" that are addressed in this Proposed Rule. Are there additional issues on the application of this provision, or related provisions, that require clarification in a regulation?

10. Section 210(h) provides the FDIC with authority to charter a bridge financial company to facilitate the liquidation of a covered financial company. What issues surrounding the chartering, operation, and termination of a bridge company would benefit from a regulation? How should those issues be addressed?

11. Regarding actual direct compensatory damages for the repudiation of a contingent obligation in the form of a guarantee, letter of credit, loan commitment, or similar credit obligation, should the Proposed Rule be amended to specifically provide a method for determining the estimated value of the claim? In addition to the statutory considerations in valuation, including the likelihood that the contingent claim would become fixed and its probable magnitude, what other factors are appropriate? If so, what methods for determining such estimated value would be appropriate? Should the regulation provide more detail on when a claim is contingent?

12. Are the provisions of the Dodd-Frank Act relating to the classification of claims as administrative expenses of the receiver sufficiently clear, or is additional rulemaking necessary to clarify such classification?

13. Should the Proposed Rule's definition of "long-term senior debt" be clarified or amended?

V. Regulatory Analysis and Procedure

A. Paperwork Reduction Act

The Proposed Rule would establish internal rules and procedures for the liquidation of a failed systemically important financial company. It would not involve any new collections of information pursuant to the Paperwork Reduction Act (44 U.S.C. 3501 *et seq.*). Consequently, no information collection has been submitted to the Office of Management and Budget for review.

B. Regulatory Flexibility Act

The Regulatory Flexibility Act requires an agency that is issuing a final rule to prepare and make available a regulatory flexibility analysis that describes the impact of the final rule on small entities. (5 U.S.C. 603(a)). The Regulatory Flexibility Act provides that an agency is not required to prepare and publish a regulatory flexibility analysis if the agency certifies that the final rule will not have a significant impact on a substantial number of small entities.

Pursuant to section 605(b) of the Regulatory Flexibility Act, the FDIC certifies that the Proposed Rule will not have a significant impact on a substantial number of small entities. The Proposed Rule would clarify rules and procedures for the liquidation of a failed systemically important financial company, which will provide internal guidance to FDIC personnel performing the liquidation of such a company and will address any uncertainty in the financial system as to how the orderly liquidation of such a company would operate. As such, the Proposed Rule would not impose a regulatory burden on entities of any size and does not significantly impact small entities.

C. The Treasury and General Government Appropriations Act, 1999—Assessment of Federal Regulations and Policies on Families

The FDIC has determined that the Proposed Rule will not affect family well-being within the meaning of section 654 of the Treasury and General Government Appropriations Act, enacted as part of the Omnibus Consolidated and Emergency Supplemental Appropriations Act of 1999 (Pub. L. 105–277, 112 Stat. 2681).

E. Plain Language

Section 722 of the Gramm-Leach-Bliley Act (Pub. L. 106–102, 113 Stat. 1338, 1471), requires the Federal banking agencies to use plain language in all proposed and final rules published after January 1, 2000. The FDIC has sought to present the Proposed Rule in a simple and straightforward manner. The FDIC invites comments on whether the Proposed Rule is clearly stated and effectively organized and how the FDIC might make the final rule on this subject matter easier to understand.

List of Subjects in 12 CFR Part 380

Holding companies, Insurance companies.

For the reasons stated above, the Board of Directors of the Federal Deposit Insurance Corporation proposes to amend title 12 of the Code of Federal Regulations by adding new part 380 to read as follows:

PART 380—ORDERLY LIQUIDATION AUTHORITY

Sec.
380.1 Definitions.
380.2 Treatment of similarly situated claimants.
380.3 Treatment of personal service agreements.
380.4 Provability of claims based on contingent obligations.
380.5 Treatment of covered financial companies that are subsidiaries of insurance companies.
380.6 Limitation on liens on assets of covered financial companies that are insurance companies or covered subsidiaries of insurance companies.

Authority: 12 U.S.C. 5301 *et seq.*

§ 380.1 Definitions.

As used in this part, the terms "bridge financial company," "Corporation," "covered financial company," "covered subsidiary," "insurance company," and "subsidiary" have the same meanings as in the Dodd-Frank Wall Street Reform and Consumer Protection Act (12 U.S.C. 5301 *et seq.*).

§ 380.2 Treatment of similarly situated claimants.

(a) For the purposes of this section, the term "long-term senior debt" means senior debt issued by the covered financial company to bondholders or other creditors that has a term of more than 360 days. It does not include partially funded, revolving or other open lines of credit that are necessary to continuing operations essential to the receivership or any bridge financial company, nor to any contracts to extend credit enforced by the receiver under 12 U.S.C. 5390(c)(13)(D).

(b) In applying any provision of the Act permitting the Corporation to exercise its discretion, upon appropriate determination, to make payments or credit amounts, pursuant to 12 U.S.C. 5390(b)(4), (d)(4), or (h)(5)(E) to or for some creditors but not others similarly situated at the same level of payment priority, the Corporation shall not exercise such authority in a manner that would result in the following recovering more than the amount established and due under 12 U.S.C. 5390(b)(1), or other priorities of payment specified by law:

(1) Holders of long-term senior debt who have a claim entitled to priority of payment at the level set out under 12 U.S.C. 5390(b)(1)(E);

(2) Holders of subordinated debt who have a claim entitled to priority of payment at the level set out under 12 U.S.C. 5390(b)(1)(F);

(3) Shareholders, members, general partners, limited partners, or other persons who have a claim entitled to priority of payment at the level set out under 12 U.S.C. 5390(b)(1)(H); or

(4) Other holders of claims entitled to priority of payment at the level set out under 12 U.S.C. 5390(b)(1)(E) unless the Corporation, through a vote of the members of the Board of Directors then serving and in its sole discretion, specifically determines that additional payments or credit amounts to such holders are necessary and meet all of the requirements under 12 U.S.C. 5390(b)(4), (d)(4), or (h)(5)(E), as applicable. The authority of the Board to make the foregoing determination cannot be delegated.

(c) Proven claims secured by a legally valid and enforceable or perfected security interest or security entitlement in any property or other assets of the covered financial company shall be paid or satisfied in full to the extent of such collateral, but any portion of such claim which exceeds an amount equal to the fair market value of such property or other assets shall be treated as an unsecured claim and paid in accordance with the priorities established in 12 U.S.C. 5390(b) and otherwise applicable provisions. Proven claims secured by such security interests or security entitlements in securities that are direct obligations of, or that are fully guaranteed by, the United States or any agency of the United States shall be valued for such purposes at par value.

§ 380.3 Treatment of personal service agreements.

(a) *Definitions.* (1) The term "personal service agreement" means a written agreement between an employee and a covered financial company, covered subsidiary or a bridge financial company setting forth the terms of employment. This term also includes an agreement between any group or class of employees and a covered financial company, covered subsidiary or a bridge financial company, including, without limitation, a collective bargaining agreement.

(2) The term "senior executive" means for purposes of this section, any person who participates or has authority to participate (other than in the capacity of a director) in major policymaking functions of the company, whether or not: the person has an official title; the title designates the officer an assistant; or the person is serving without salary or other compensation. The chairman of the board, the president, every vice president, the secretary, and the treasurer or chief financial officer, general partner and manager of a company are considered executive officers, unless the person is excluded, by liquidation of the board of directors, the bylaws, the operating agreement or the partnership agreement of the company, from participation (other than in the capacity of a director) in major policymaking functions of the company, and the person does not actually participate therein.

(b)(1) If before repudiation or disaffirmance of a personal service agreement, the Corporation as receiver of a covered financial company, or the Corporation as receiver of a bridge financial company accepts performance of services rendered under such agreement, then:

(i) The terms and conditions of such agreement shall apply to the performance of such services; and

(ii) Any payments for the services accepted by the Corporation as receiver shall be treated as an administrative expense of the receiver.

(2) If a bridge financial company accepts performance of services rendered under such agreement, then the terms and conditions of such agreement shall apply to the performance of such services.

(c) No party acquiring a covered financial company or any operational unit, subsidiary or assets thereof from the Corporation as receiver or from any bridge financial company shall be bound by a personal service agreement unless the acquiring party expressly assumes the personal services agreement.

(d) The acceptance by the Corporation as receiver for a covered financial company, by any bridge financial company or the Corporation as receiver of a bridge financial company of services subject to a personal service agreement shall not limit or impair the

authority of the Corporation as receiver to disaffirm or repudiate any personal service agreement in the manner provided for the disaffirmance or repudiation of any agreement under 12 U.S.C. 5390.

(e) Paragraph (b) of this section shall not apply to any personal service agreement with any senior executive or director of the covered financial company or covered subsidiary, nor shall it in any way limit or impair the ability of the receiver to recover compensation from any senior executive or director of a failed financial company under 12 U.S.C. 5390.

§ 380.4 Provability of claims based on contingent obligations.

(a) This section only applies to contingent obligations of the covered financial company consisting of a guarantee, letter of credit, loan commitment, or similar credit obligation that becomes due and payable upon the occurrence of a specified future event (other than the mere passage of time), which:

(1) Is not under the control of either the covered financial company or the party to whom the obligation is owed; and

(2) Has not occurred as of the date of the appointment of the receiver.

(b) A claim based on a contingent obligation of the covered financial company may be provable against the receiver notwithstanding the obligation not having become due and payable as of the date of the appointment of the receiver.

(c) If the receiver repudiates a guarantee, letter of credit, loan commitment, or similar credit obligation that is contingent as of the date of the receiver's appointment, the actual direct compensatory damages for repudiation shall be no less than the estimated value of the claim as of the date the Corporation was appointed receiver of the covered financial company, as such value is measured based upon the likelihood that such contingent claim would become fixed and the probable magnitude thereof.

§ 380.5 Treatment of covered financial companies that are subsidiaries of insurance companies.

The Corporation shall distribute the value realized from the liquidation, transfer, sale or other disposition of the direct or indirect subsidiaries of an insurance company, that are not themselves insurance companies, solely in accordance with the order of priorities set forth in 12 U.S.C. 5390(b)(1).

§ 380.6 Limitation on liens on assets of covered financial companies that are insurance companies or covered subsidiaries of insurance companies.

(a) In the event that the Corporation makes funds available to a covered financial company that is an insurance company or is a covered subsidiary or affiliate of an insurance company or enters into any other transaction with respect to such covered entity under 12 U.S.C. 5384(d), the Corporation will exercise its right to take liens on some or all assets of such covered entities to secure repayment of any such transactions only when the Corporation, in its sole discretion, determines that:

(1) Taking such lien is necessary for the orderly liquidation of the entity; and

(2) Taking such lien will not either unduly impede or delay the liquidation or rehabilitation of such insurance company, or the recovery by its policyholders.

(b) This section shall not be construed to restrict or impair the ability of the Corporation to take a lien on any or all of the assets of any covered financial company or covered subsidiary or affiliate in order to secure financing provided by the Corporation or the receiver in connection with the sale or transfer of the covered financial company or covered subsidiary or affiliate or any or all of the assets of such covered entity.

Dated at Washington, DC, this 8th day of October, 2010.

By order of the Board of Directors.

Roberte E. Feldman,

Executive Secretary, Federal Deposit Insurance Corporation.

[FR Doc. 2010–26049 Filed 10–18–10; 8:45 am]

BILLING CODE 6714–01–P

SECURITIES AND EXCHANGE COMMISSION

17 CFR Parts 229, 230, 240, and 249

[Release Nos. 33–9150, 34–63091; File No. S7–26–10]

RIN 3235–AK76

Issuer Review of Assets in Offerings of Asset-Backed Securities

AGENCY: Securities and Exchange Commission.

ACTION: Proposed rule.

SUMMARY: We are proposing new requirements in order to implement Section 945 and a portion of Section 932 of the Dodd-Frank Wall Street Reform and Consumer Protection Act of 2010 (the "Act"). First, we are proposing a new rule under the Securities Act of 1933 to require any issuer registering the offer and sale of an asset-backed security ("ABS") to perform a review of the assets underlying the ABS. We also are proposing amendments to Item 1111 of Regulation AB that would require an ABS issuer to disclose the nature of its review of the assets and the findings and conclusions of the issuer's review of the assets. If the issuer has engaged a third party for purposes of reviewing the assets, we propose to require that the issuer disclose the third-party's findings and conclusions. We also are proposing to require that an issuer or underwriter of an ABS offering file a new form to include certain disclosure relating to third-party due diligence providers, to implement Section 15E(s)(4)(A) of the Securities Exchange Act of 1934, a new provision added by Section 932 of the Act.

DATES: Comments should be received on or before November 15, 2010.

ADDRESSES: Comments may be submitted by any of the following methods:

Electronic Comments

- Use the Commission's Internet comment form (*http://www.sec.gov/rules/proposed.shtml*); or
- Send an e-mail to *rule-comments@sec.gov.* Please include File Number S7–26–10 on the subject line; or
- Use the Federal eRulemaking Portal (*http://www.regulations.gov*). Follow the instructions for submitting comments.

Paper Comments

- Send paper comments in triplicate to Elizabeth M. Murphy, Secretary, Securities and Exchange Commission, 100 F Street, NE., Washington, DC 20549–1090.

All submissions should refer to File Number S7–26–10. This file number should be included on the subject line if e-mail is used. To help us process and review your comments more efficiently, please use only one method. The Commission will post all comments on the Commission's Internet Web site (*http://www.sec.gov/rules/proposed.shtml*). Comments are also available for Web site viewing and printing in the Commission's Public Reference Room, 100 F Street, NE., Washington, DC 20549, on official business days between the hours of 10 a.m. and 3 p.m. All comments received will be posted without change; we do not edit personal identifying information from submissions. You should submit only information that you wish to make available publicly.

FOR FURTHER INFORMATION CONTACT: Eduardo Aleman, Special Counsel, Division of Corporation Finance, at (202) 551–3430, U.S. Securities and Exchange Commission, 100 F Street, NE., Washington, DC 20549.

SUPPLEMENTARY INFORMATION: We are proposing amendments to Item 1111 [1] of Regulation AB [2] (a subpart of Regulation S–K). We also are proposing to add Rule 193 [3] under the Securities Act of 1933 [4] (the "Securities Act") and Rule 15Ga–2 [5] and Form ABS–15G [6] under the Securities Exchange Act of 1934 (the "Exchange Act").[7]

I. Background

This release is one of several we are required to issue to implement provisions of the Act.[8] This release proposes a new rule and certain amendments to implement Section 7(d) of the Securities Act,[9] which was added by Section 945 of the Act. In addition, we are proposing a new rule and form to implement Section 15E(s)(4)(A) of the Exchange Act,[10] which was added by Section 932 of the Act.

Section 945 of the Act amends Section 7 of the Securities Act to require the Commission to issue rules relating to the registration statement required to be filed by an issuer of ABS. Pursuant to new Section 7(d), the Commission must issue rules to require that an issuer of an ABS perform a review of the assets underlying the ABS, and disclose the nature of such review.[11] Section 7(d) requires that we adopt these rules not later than 180 days after enactment.

Section 932 of the Act adds new Section 15E(s)(4)(A) of the Exchange Act, which also relates to the review of assets underlying an ABS. Section 15E(s)(4)(A) requires an issuer or underwriter of any ABS to make publicly available the findings and conclusions of any third-party due diligence report obtained by the issuer or underwriter.[12] Because the substance of new Section 7(d) of the Securities Act is related to new Section 15E(s)(4)(A) of the Exchange Act, we are considering both provisions added by the Act together.

II. Proposed Rules

A. Proposed Requirement That an ABS Issuer Perform a Review of the Assets

We are proposing new Rule 193 under the Securities Act to require issuers of ABS to perform a review of the assets underlying registered ABS offerings.[13] This rule would implement Securities Act Section 7(d)(1),[14] as added by Section 945 of the Act.

1. Application of the Proposed Rule

Section 7(d)(1) relates to an asset-backed security, as defined in new Section 3(a)(77) of the Exchange Act.[15] This new statutory definition ("Exchange Act-ABS") is broader than the definition of "asset-backed security" in Regulation AB [16] and includes securities typically offered and sold in private transactions. Nevertheless, we have concluded that the review requirements mandated by Section 7(d)(1) apply only to registered offerings of ABS because Section 7(d)(1) requires the Commission to issue rules "relating to the registration statement." Therefore, the rule we are proposing today that would require an ABS issuer to perform a review of the assets applies to issuers of ABS in registered offerings and not issuers of ABS in unregistered offerings.

2. New Securities Act Rule 193

Rule 193 would require an issuer to perform a review of the assets underlying an ABS in a transaction that will be registered under the Securities Act. Rule 193 would not specify the level or type of review an issuer is required to perform.[17] We expect that the issuer's level and type of review of the assets may vary depending on the circumstances. For example, the level or type of review may vary among different asset classes. While proposed Rule 193 would not require a particular level or type of review, we note that, if adopted, required responsive disclosure would describe the level and type of review. We believe the disclosure requirements below will give investors an ability to evaluate the level and adequacy of the issuer's review of the assets.

Rule 193 would not specify the type or level of review an issuer is required to perform or require that a review be designed in any particular manner, although as set out below, we are requesting comment on whether and, if so, how the Commission should specify the nature of the review.[18] We believe that the nature of review may vary depending on numerous circumstances and factors which could include, for example, the nature of the assets being securitized and the degree of continuing involvement by the sponsor. For

[1] 17 CFR 229.1111.

[2] 17 CFR 229.1100 through 17 CFR 229.1123.

[3] 17 CFR 230.193.

[4] 15 U.S.C. 77a *et seq.*

[5] 17 CFR 240.15Ga–2.

[6] 17 CFR 249.ABS–15G.

[7] 15 U.S.C. 78a *et seq.*

[8] Public Law 111–203, 124 Stat. 1376 (July 21, 2010).

[9] 15 U.S.C. 77g(d).

[10] 15 U.S.C. 78o–7(s)(4)(A).

[11] We note that recently adopted amendments to a safe harbor rule by the Federal Deposit Insurance Corporation require, in residential mortgage-backed securities offerings, sponsors to disclose a third-party diligence report on compliance with origination standards and the representations and warranties made with respect to the assets. *See Treatment by the Federal Deposit Insurance Corporation as Conservator or Receiver of Financial Assets Transferred by an Insured Depository Institution in Connection with a Securitization or Participation After September 30, 2010,* Final Rule, Federal Deposit Insurance Corporation, (Sept. 27, 2010).

[12] We will propose rules to implement the rest of Section 15E(s)(4) at a later date. Section 15E(s)(4)(B) requires a provider of third-party due diligence services to provide a certification to any nationally recognized statistical rating organization ("NRSRO") rating the transaction. Section 15E(s)(4)(C) requires the Commission to establish the form and content of such certification, and Section 15E(s)(4)(D) requires the Commission to adopt rules requiring an NRSRO to disclose the certification to the public. The Act requires that final regulations under Section 15E(s)(4) be adopted not later than one year after enactment.

[13] The requirement under this proposal to perform a review should not be confused with, and is not intended to change, the due diligence defense against liability under Securities Act Section 11 [15 U.S.C. 77k] or the reasonable care defense against liability under Securities Act Section 12(a)(2) [15 U.S.C. 77*l*(a)(2)]. Our proposed rule is designed to require a review of the underlying assets by the issuer and to provide disclosure of the nature, findings and conclusions of such review.

[14] 15 U.S.C. 77g(d)(1).

[15] 15 U.S.C. 78c(a)(77). This definition was added by Section 941(a) of the Act.

[16] *See* Item 1101(c)(1) of Regulation AB [17 CFR 229.1101(c)(1)].

[17] We understand that various levels and types of review may be performed in a securitization. For example, commentators on a recent proposing release on asset-backed securities have identified that the type of review conducted by a sponsor of a securitization of sub-prime mortgage loans typically falls into three general categories. First, a credit review examines the sample loans to ascertain whether they have been originated in accordance with the originator's underwriting guidelines. This would include a review of whether the loan characteristics reported by the originator are accurate and whether the credit profile of the loans is acceptable to the sponsor. A second type of review could be a compliance review which examines whether the loans have been originated in compliance with applicable laws, including predatory lending and Truth in Lending statutes. Third, a valuation review entails a review of the accuracy of the property values reported by the originators for the underlying collateral. This could include a review of each original appraisal to assess whether it appeared to comply with the originator's appraisal guidelines, and the appropriateness of the comparables used in the original appraisal process. *See* comment letter from The Commonwealth of Massachusetts Office of the Attorney General ("Massachusetts AG comment letter") on *Asset-Backed Securities,* SEC Release No. 33–9117 (April 7, 2010) [75 FR 23328] (the "2010 ABS Proposing Release"). The comment letters are available at *http://www.sec.gov/comments/s7-08-10/s70810.shtml.*

[18] Given the 180-day statutory deadline prescribed by the Act, we have not attempted to describe a type of review that may be appropriate for various different asset classes; we believe that devising various levels of review applicable to each different asset class would require a more extensive undertaking than is feasible in the time provided.

example, in offerings of residential mortgage-backed securities ("RMBS"), where the asset pool consists of a large group of loans, it may be appropriate, depending on all the facts, to review a sample of loans large enough to be representative of the pool, and then conduct further review if the initial review indicates that further review is warranted. By contrast, for ABS where a significant portion of the cash flow will be derived from a single obligor or a small group of obligors, such as ABS backed by a small number of commercial loans ("CMBS"), it may be appropriate for the review to include every pool asset. Moreover, in ABS transactions where the asset pool composition turns over rapidly because it contains revolving assets, such as credit card receivables or dealer floorplan receivables, a different type of review may be warranted than in ABS transactions involving term receivables, such as mortgage or auto loans.

While proposed Rule 193 would not specify a particular type or level of review, we note that under our proposal, prospectus disclosure of the nature of review would be required. We believe the disclosure requirements described below will give investors an ability to evaluate the level and adequacy of the issuer's review of the assets. We request comment below on whether disclosure, without mandating the nature of the review to be conducted, is sufficient.

While we are not proposing the nature of the review that would be required, we note that some of the data points proposed in the 2010 ABS Proposing Release describe the type of review items that may be relevant to the review that must be performed to comply with Rule 193.[19] In our proposals requiring enhanced disclosure for an ABS offering, we proposed to require prospectuses for public offerings of ABS and ongoing Exchange Act reports to contain specified asset-level information about each of the assets in the pool.[20] The asset-level information would be provided according to proposed standards and in a tagged data format.[21]

Proposed Rule 193 would require that the asset review be conducted by the issuer of the ABS.[22] The issuer, for purposes of this rule, would be the depositor or sponsor of the securitization. A sponsor typically initiates a securitization transaction by selling or pledging to a specially-created issuing entity a group of financial assets that the sponsor either has originated itself or has purchased in the secondary market.[23] In some instances, the transfer of assets is a two-step process: the financial assets are transferred by the sponsor first to an intermediate entity, the depositor or the issuer, and then the depositor transfers the assets to the issuing entity for the particular asset-backed transaction. The issuing entity is typically a statutory trust.[24] In cases where the originator and sponsor may be different, including in transactions involving a so-called "aggregator," the review may be performed by the sponsor, but we propose that a review performed by an unaffiliated originator would not satisfy proposed Rule 193. The originator may have different interests in the securitization, especially if the securitization involves many originators where each originator may have contributed a very small part of the assets in the entire pool, and may have differing approaches to the review.[25]

If an issuer engages a third party for purposes of reviewing the pool assets, then an issuer may rely on the third-party's review to satisfy its obligations under proposed Rule 193 provided the third party is named in the registration statement and consents to being named as an "expert" in accordance with Section 7 of the Securities Act and Rule 436 under the Securities Act.[26] We are aware that, at least with respect to RMBS, there is a specialized industry of third-party due diligence firms.[27] These firms typically are retained to review, for example, the accuracy of loan level data.[28] Allowing issuers to contract with a third-party due diligence provider[29] is consistent with Section 15E(s)(4) of the

[19] Our proposal for asset-level data points in our 2010 ABS Proposing Release, which remains outstanding, provides examples of the kind of information that the issuer could undertake to review in order to comply with proposed Rule 193. For example, in the case of RMBS, the Commission proposed requiring, for each loan in the pool, standardized disclosure of, among others, credit score, employment status, and income of the obligor and how that information was verified. Some specific data points that were proposed include:

The appraised value used to approve the loan, original property valuation type, and most recent appraised value, as well as the property valuation method, date of valuation, and valuation confidence scores;

Combined and original loan-to-value ratios and the calculation date;

Obligor and co-obligor's length of employment, whether they are self-employed and the level of verification (*e.g.,* not verified, stated and not verified, or direct independent verification with a third-party of the obligor's current employment); and

Obligor and co-obligor's wage and other income and a code that describes the level of verification. For income of the obligor, the issuer would be required, if adopted, under our 2010 ABS Proposing Release to indicate what level of review of the income was conducted. One possible level of review would be that income was verified by previous W–2 forms or tax returns and year-to-date pay stubs, if the obligor was salaried. Another possibility would be that the income was verified for the last 24 months through W–2 forms, pay stubs, bank statements, and/or tax returns. As noted, we are not proposing specific standards for the review required by proposed Rule 193. While the Commission believes these data points may be relevant, they are intended to serve only as examples of items that we anticipate an issuer would consider reviewing in order to comply with proposed Rule 193. These proposals remain outstanding as we consider comments received on the 2010 ABS Proposing Release.

[20] Some asset classes such as credit card receivables and stranded costs would be exempt from this rule; however, credit card ABS would be required to provide grouped account data.

[21] In addition, Section 942 of the Act adds new Section 7(c) to the Securities Act requiring the Commission to adopt regulations requiring each issuer of an asset-backed security to disclose, for each tranche or class of security, standardized information regarding the assets backing that security.

[22] Under Securities Act Rule 191 (17 CFR 230.191), the depositor for the asset-backed securities acting solely in its capacity as depositor to the issuing entity is the "issuer" for purposes of the asset-backed securities of that issuing entity. "Depositor" means the depositor who receives or purchases and transfers or sells the pool assets to the issuing entity. *See* Item 1101 of Regulation AB. For asset-backed securities transactions where there is not an intermediate transfer of the assets from the sponsor to the issuing entity, the term depositor refers to the sponsor. For asset-backed securities transactions where the person transferring or selling the pool assets is itself a trust, the depositor of the issuing entity is the depositor of that trust. *See id.*

[23] As defined in Item 1101 of Regulation AB, the "sponsor" means the person who organizes and initiates an ABS transaction by selling or transferring assets, either directly or indirectly, including through an affiliate, to the issuing entity. *See* 17 CFR 229.1101(1). Where there is not a two-step transfer, the term "depositor" refers to the sponsor.

[24] *See Asset-Backed Securities,* Release No. 33–8518 (Dec. 22, 2004) [70 FR 1506] ("2004 Regulation AB Adopting Release") at Section III.B.3. The issuing entity is designed to be a passive entity, and in order to meet the definition of ABS issuer in Regulation AB its activities must be limited to passively owning or holding the pool of assets, issuing the ABS supported or serviced by those assets, and other activities reasonably incidental thereto.

[25] In the case of so-called aggregators, the sponsor acquires loans from many other unaffiliated sellers before securitization.

[26] Section 7 of the Securities Act requires the consent of any person whose profession gives authority to a statement made by him, is named as having prepared or certified any part of the registration statement, or is named as having prepared or certified a report or valuation for use in connection with the registration statement. The third-party's findings and conclusions must also be disclosed in a registration statement and a consent from the third party must be obtained in accordance with Section 7.

[27] *See* Testimony of Vicki Beal, Senior Vice President Clayton Holdings, Before the Financial Crisis Inquiry Commission (Sept. 23, 2010), *available at http://www.fcic.gov/hearings/pdfs/2010–0923–Beal.pdf.*

[28] *See, e.g.,* Vikas Bajaj and Jenny Anderson, *Inquiry Focuses on Withholding of Data on Loans,* N.Y. Times, January 12, 2008; E. Scott Reckard, *Sub-prime Mortgage Watchdogs Kept on Leash; Loan Checkers Say Their Warnings of Risk Were Met with Indifference*, Los Angeles Times, March 17, 2008, at C1.

[29] In this release, we refer to third parties engaged for purposes of reviewing the assets also as third-party due diligence providers.

Exchange Act which, as discussed further below, requires the issuer or underwriter of an ABS to make publicly available the findings and conclusions of a third-party due diligence report and requires a third-party due diligence provider that is employed by a nationally recognized statistical rating organization ("NRSRO"), an issuer or an underwriter to provide a written certification to the NRSRO that produces a credit rating. Under Section 15E(s)(4) of the Exchange Act, the Commission is required to establish the appropriate format and content for the certifications "to ensure that providers of due diligence services have conducted a thorough review of data, documentation, and other relevant information necessary for a nationally recognized statistical rating organization to provide an accurate rating."[30] We believe that a "third party engaged for purposes of performing a review" is a broad category that would include any third party on which the issuer relies to review assets in the pool. We believe that the third party engaged by the issuer to perform a review of the assets for purposes of complying with Rule 193 likely would be the same third-party due diligence providers whose reports must be made publicly available by an issuer or underwriter for purposes of Section 15E(s)(4)(A), although we seek comment on whether that is appropriate.

Request for Comment

1. Does our proposed rule to require the issuer of ABS in a registered transaction to perform a review of the assets adequately address Section 7(d)(1) of the Securities Act, as added by Section 945 of the Act? Is this proposal, coupled with the proposed disclosure requirements described below, sufficient to carry out the purposes of Section 7(d)(1) of the Act? Can investors evaluate for themselves the sufficiency of the review undertaken by the issuer? Will issuers undertake a meaningful review absent a minimum review standard?

2. Should we instead mandate a minimum level of review that must be performed on the pool of assets? Would requiring a minimum level of review better carry out the mandate of Securities Act Section 7(d)(1), which imposes a new review requirement, separate from the disclosure requirement in Section 7(d)(2)?[31] If so, what level of review would be appropriate? For instance, should we require that the review, at a minimum, provide reasonable assurance that the disclosure in the prospectus regarding the assets is accurate in all material respects?[32] We note that the federal securities laws currently require that disclosure in the prospectus not contain an untrue statement of a material fact or omit to state a material fact required to be stated therein or necessary to make the statements not misleading.[33] Therefore, we would expect that issuers are currently performing some level of review in order to provide them sufficient comfort to believe that the prospectus disclosure is accurate. A reasonable assurance level would be similar to the standard that companies use in designing and maintaining disclosure controls and procedures required under Exchange Act Rule 13a–15.[34] Our rules generally "require an issuer to maintain disclosure controls and procedures to provide reasonable assurance that the issuer is able to record, process, summarize and report the information required in the issuer's Exchange Act reports" within appropriate time frames, and companies have been subject to these requirements for many years.[35]

- If we required that the review, at a minimum, provide reasonable assurance that the disclosure in the prospectus regarding the assets is accurate in all material respects, would issuers and their advisers be familiar with this reasonable assurance level and understand how that level would apply in the context of a review of assets underlying ABS?[36]
- Would a different level of assurance that the disclosure in the prospectus regarding the assets is accurate in all material respects be appropriate? If so, what level and why?
- Should a minimum standard require that the review be not just designed but also effected to provide reasonable assurance that the disclosure was accurate?
- Is there a minimum level of review that would be more appropriate or useful to investors without imposing impracticable burdens and costs on issuers?
- How, if at all, should any such standard of review affect current law regarding antifraud liability? How, if at all, should any such standard of review affect the due diligence defense against liability under Securities Act Section 11[37] and the reasonable care defense against liability under Securities Act Section 12(a)(2)?[38]
- Should the rule further specify the types of matters—*e.g.,* credit—that should be covered by the review?
- In addition, should the rule further specify the level of review? For example, should it set out parameters to determine whether sampling is appropriate?

3. We note that in the 2010 ABS Proposing Release, we proposed requiring that the underlying transaction agreement in a transaction relying on certain Commission safe harbors for an exemption from the

[30] As noted above, we will address these requirements in a subsequent rulemaking.

[31] We note that this section is not limited to requiring disclosure; the section imposes an obligation to conduct a review and to disclose the nature of the review. In other contexts, we have previously adopted rules pursuant to a legislative mandate that required issuers or other parties to take (or not take) particular action. *See e.g., Management's Report on Internal Control Over Financial Reporting and Certification of Disclosure in Exchange Act Periodic Reports,* Release No. 33–8238 (June 5, 2003) (adopting rules requiring management of companies subject to the Exchange Act's reporting requirements to establish and maintain adequate internal control over financial reporting for the company as directed by Section 404 of the Sarbanes-Oxley Act of 2002); *See also Insider Trades During Pension Fund Blackout Periods,* Release No. 34–47225 (Jan. 22, 2003) (adopting rules to give effect to Section 306(a) of the Sarbanes-Oxley Act of 2002), which prohibits directors or executive officers of any issuer of an equity security from conducting transactions in the issuer's securities during a pension plan blackout period. The Act also imposes other substantive requirements, such as requiring securitizers to retain 5% risk. *See* Section 941 of the Act.

[32] Thus, for example, if the prospectus disclosed that the loans are limited to borrowers with a specified minimum credit score, or certain income level, the review, as designed, would be required to provide reasonable assurance that the loans in the pool met this criterion.

[33] *See* Securities Act Section 11 [15 U.S.C. 77k] and Securities Act Sections 12 [12 U.S.C. 77l]. *See also* Securities Act Section 17 [15 U.S.C. 77q], Exchange Act Section 10(b) [15 U.S.C. 78j] and Rule 10b–5 under the Exchange Act [17 CFR 240.10b–5].

[34] *See* Exchange Act Rule 13a–15 [17 CFR 240.13a–15].

[35] *See Management's Report on Internal Control over Financial Reporting and Certification of Disclosure in Exchange Act Periodic Reports,* at Section F.4, Release No. 33–8238 (June 5, 2003). *See also Certification of Disclosure in Companies' Quarterly and Annual Reports,* Release No. 34–8124 (June 14, 2002). ABS issuers must provide in Form 10–K an assessment by each party participating in the servicing function regarding its compliance with specified servicing criteria set forth in Item 1122 of Regulation AB. *See* 17 CFR 229.1122. A registered public accounting firm must issue an attestation report on such party's assessment of compliance. *See id.*

[36] Although ABS issuers are not subject to Rule 13a–15, ABS issuers that also issue corporate securities are familiar with it. We previously have recognized that, because the information ABS issuers are required to provide differs significantly from that provided by other issuers, and because of the structure of ABS issuers as typically passive pools of assets, the certification requirements should be tailored specifically for ABS issuers. *See Certification of Disclosure in Companies' Quarterly and Annual Reports,* Release No. 34–8124; *See also* Revised Statement: Compliance by Asset-Backed Issuers with Exchange Act Rules 13a–14 and 15d–14, Statement by the Staff of the Division of Corporation Finance (Feb. 21, 2003), *available at http://www.sec.gov/divisions/corpfin/8124cert.htm.*

[37] 15 U.S.C. 77k.

[38] 15 U.S.C. 77*l*(a)(2).

Securities Act contain a provision requiring the issuer to provide to any initial purchaser, security holder, and designated prospective purchaser the same information as would be required in a registered transaction.[39] Similar to the approach in the 2010 ABS Proposing Release, should we condition the safe harbors for an exemption from registration provided in Regulation D and Securities Act Rule 144A on a requirement that the underlying transaction agreement for the ABS contain a representation that the issuer performed a review that complies with proposed Rule 193? Alternatively, if we adopt Rule 193 with some minimum standard of review, should we condition the safe harbors for an exemption from registration provided in Regulation D and Securities Act Rule 144A simply on a requirement that the issuer perform a review of the underlying assets? If so, should we also require that the issuer represent in the transaction agreement that it will certify such review or provide disclosure regarding the nature of the issuer's review and findings and conclusions?

4. Should we specify the types of review that should be performed? For example, should we require that the review verify the accuracy of the data entry of loan information into the loan tape, containing data about the loans in the pool (*e.g.,* loan-to-value ratio, debt-to-income ratio)? Should the rule establish a standard requiring a review sufficient to determine whether the underlying assets meet the underwriting criteria? Should any required review entail reviewing borrowers' income levels to determine borrowers' ability to repay the underlying loans? Should the rule establish a standard for reviewing whether the loans have been originated in compliance with applicable laws, including predatory lending and Truth in Lending statutes? Should we establish standards for a review of the accuracy of the property values reported by the originators for the underlying collateral?[40] Could each such type of review be conducted across all asset classes (*e.g.,* residential mortgages, commercial mortgages, credit card receivables, resecuritizations)? What standards would be appropriate for each asset class or across all asset classes of asset-backed securities?

5. Should we explore devising review standards for each particular asset class and consider proposing more detailed standards for the nature of review at a later date? If so, how?

6. Should our rules, as proposed, permit issuers to rely on a third party that was hired by the issuer to perform the required review of the assets under Rule 193? Should we, as proposed, condition the ability to rely on a third party for this purpose on the third-party's review satisfying the requirements of Rule 193? When we adopt rules in the future to establish the appropriate format and content for the certifications required pursuant to Exchange Act Section 15E(s)(4)(B), we will be required to do so in a manner "to ensure that providers of due diligence services have conducted a thorough review of data, documentation, and other relevant information necessary for a nationally recognized statistical rating organization to provide an accurate rating."[41] Should we condition reliance on third parties for purposes of Rule 193 upon satisfaction of that standard? How else could the proposal better effectuate Exchange Act Section 15E(s)(4)?[42]

7. If an originator performs a review of the assets and provides the findings and conclusions of its review to the issuer and the originator is not affiliated with the sponsor of the securitization, should we allow an issuer to rely on the originator's review of the assets in order to satisfy the issuer's review requirements? If so, should the information relating to the originator's review be treated similarly to third-party reviews? As described above, under our proposal, an issuer would be permitted to rely on a third party to conduct the Rule 193 review provided the review satisfied the requirements of Rule 193 and the third party is named in the registration statement and consents to being named as an expert in accordance with Section 7 of the Securities Act and Rule 436 under the Securities Act.[43] If we allow such reviews to satisfy Rule 193, should the findings and conclusions of third-party originators who conduct Rule 193 reviews likewise be subject to expert liability?

8. Is there any other party that an issuer should be allowed to rely upon in order to satisfy the review required by proposed Rule 193? For example, should an issuer be permitted to rely upon the underwriter of the offering? If so, how should we treat the findings and conclusions of that party? Should that party's findings and conclusions be subject to expert liability? If not, how can we ensure that such parties would take appropriate responsibility for any findings included in the issuer's registration statement?

9. We propose to permit an issuer to rely upon a third party that is engaged for purposes of performing a review of the assets to satisfy Rule 193. Is "third party engaged for purposes of performing a review of the pool assets" an appropriate description? If not, what is a more appropriate description? What entities should be considered a "third party engaged for purposes of performing a review"? Should such third-party reviewers include accountants who, for example, perform reviews and prepare reports pursuant to agreed-upon procedures? Should such third-party reviewers include attorneys who, for example, provide opinions as to the perfection of the security interest in the collateral?[44] Are there policy reasons why a particular type of third-party reviewer should be excluded from this requirement? We note that the issuer would remain responsible for its disclosure under the federal securities laws, including disclosure regarding pool assets, even if it engages a third party to perform the review required by Rule 193. Should the proposed rule be revised to clarify this point?

10. It appears that the scope of third-party due diligence providers is broad enough to include appraisers and engineers for purposes of Section 15E(s)(4). Is there a basis for a different approach? Should this vary among different asset classes? For example, should the requirements differ depending on whether the asset class for the securities is commercial mortgages or residential mortgages? We are aware that for certain types of ABS offerings (*e.g.,* CMBS offerings) an issuer may receive numerous reports from appraisers and engineers regarding the property underlying the loan.

11. As discussed below, Exchange Act Section 15E(s)(4)(A) requires an issuer or underwriter of ABS to make publicly available the findings and conclusions of any third-party due diligence report obtained by the issuer or underwriter.

[39] *See* discussion in Section VI of the 2010 ABS Proposing Release.

[40] *See, e.g.,* joint comment letter from American Society of Appraisals, American Society of Farm Managers and Rural Appraisers, and National Association of Independent Fee Appraisers on the 2010 ABS Proposing Release (recommending standards of appraisal).

[41] Section 15E(s)(4)(C) of the Exchange Act.

[42] Section 15E(s)(4)(A) of the Exchange Act requires issuers to make publicly available the findings and conclusions of "any third-party due diligence report."

[43] If an issuer relies on a third party to perform the review of the assets, the third party would be an expert under Securities Act Section 11 [15 U.S.C. 77k] and its consent must be included as an exhibit to the registration statement. *See* Section 7 of the Securities Act.

[44] *See, e.g.,* John Arnholz & Edward E. Gainor, Offerings of Asset-Backed Securities § 6.06 (2007 Supplement).

How does new Exchange Act Section 15E(s)(4)(A) impact the analysis here? Should the third parties whose findings and conclusions must be made publicly available under Exchange Act Section 15E(s)(4)(A) be the same group of third parties that are engaged for the review of the assets for purposes of proposed Rule 193? If not, how can we appropriately differentiate between the groups of third-party due diligence providers? In other words, how should the rule describe the nature of the work performed by third parties subject to Section 15E(s)(4)(A) versus the nature of the work performed by third parties employed by an issuer whose findings and conclusions should be required to be disclosed in a registration statement if such parties should be different?

12. We have previously noted the potential conflict of interest arising from the "issuer pays" model for NRSROs in which an NRSRO is paid by the arranger of a structured finance product to rate the product.[45] Are third-party due diligence firms subject to the same type of potential conflicts of interest as credit rating agencies operating under the "issuer pays" model? If so, is there a way to mitigate this potential conflict?

13. Are there other potential conflicts relating to a third-party due diligence provider that we should address? How should we encourage the quality of third-party reviews? Should a third party be required to be independent if the review will be used to satisfy Rule 193? If so, do we need to define "independent"? How should we define it? Should we require disclosure relating to the affiliations of the third party? Item 1119 of Regulation AB[46] requires disclosure of affiliations among participants in the securitization. Should we revise Item 1119 to require disclosure regarding affiliations between a third-party due diligence provider and the parties listed in Item 1119?

B. Proposed Disclosure Requirements

1. Registered Offerings

Item 1111 of Regulation AB[47] outlines several aspects of the pool that the prospectus disclosure for ABS should cover. We are proposing amendments to Item 1111 to require disclosure regarding the nature of the issuer's review of the assets under proposed Rule 193 and the findings and conclusions of the review. In addition, we are re-proposing amendments from our 2010 ABS Proposing Release to require disclosure regarding the composition of the pool as it relates to assets that do not meet disclosed underwriting standards, as we believe this information would promote a better understanding of the impact of the review on the composition of the pool assets.

a. Nature of Review

We are proposing new Item 1111(a)(7) of Regulation AB to require that an issuer of ABS disclose the nature of the review it conducts to satisfy proposed Rule 193. This would include whether the issuer has hired a third-party firm for the purpose of reviewing the assets. In either case, we expect that this would include a description of the scope of the review, such as whether the issuer or a third party conducted a review of a sample of the assets or what kind of sampling technique was employed (*i.e.,* random or adverse). This proposed requirement would implement Securities Act Section 7(d)(2),[48] as added by the Act.

b. Findings and Conclusions

In order to harmonize this provision with the language used in Exchange Act Section 15E(s)(4)(A), under proposed Item 1111(a)(7), the issuer would be required to disclose the findings and conclusions of any review performed by the issuer or by a third party engaged for purposes of reviewing the assets. Although Section 7(d) of the Securities Act does not require our rules to mandate that the issuer disclose the findings and conclusions of a review in its registration statement, we believe this information is important for investors to consider along with the information in the registration statement relating to the nature of the issuer's review and the findings and conclusions of third-party due diligence providers, as required to be publicly disclosed by Securities Act Section 7(d) and Exchange Act Section 15E(s)(4)(A). We believe that disclosure of the findings and conclusions of the review would provide investors with a better picture of the assets than only the nature of the review and a better ability to evaluate the review.

As noted above, Section 15E(s)(4)(A) of the Exchange Act requires an issuer or underwriter of any ABS to make publicly available the findings and conclusions of any third-party due diligence report obtained by an issuer or underwriter. Exchange Act Section 15E(s)(4)(A) does not apply to an issuer who itself performs the review of the underlying assets. We believe that it is important to consider these two provisions together to minimize the difference in the required disclosure based merely on whether the issuer performs the review, or instead hires a third party to perform the review.[49] Consequently, as noted above, for registered offerings of ABS, proposed Item 1111(a)(7) would require disclosure of the findings and conclusions of the issuer or a third-party reviewer. We believe this approach would avoid incentives for "regulatory arbitrage" based merely on whether the review of assets was performed internally by the issuer, or whether instead the issuer hired a third party to perform the review. We are concerned that the intent of Exchange Act Section 15E(s)(4)(A) may be frustrated, and investor protection may not be served, if issuers who hired third-party loan review firms to perform a review of the assets were required to make publicly available the findings and conclusions of a review of pool assets, but issuers who performed the review themselves were not, because it could create an incentive for issuers to conduct the review themselves to avoid making publicly available the findings and conclusions of any review of the assets underlying the ABS.

c. Disclosure Regarding Exception Loans

We also are re-proposing additional requirements that we had previously proposed in the 2010 ABS Proposing Release. In the 2010 ABS Proposing Release, we proposed to detail and clarify the type of disclosure that is required to be provided for ABS offerings with respect to deviations from disclosed underwriting standards. We proposed to require that disclosure regarding the inclusion in the pool of assets that deviate from the disclosed underwriting criteria be accompanied by specific data about the amount and characteristics of those assets that did not meet the disclosed standards. We also proposed to require disclosure of what compensating or other factors, if any, were used to determine that the asset should be included in the pool, despite not having met the originator's specified underwriting standards. The

[45] *See, e.g., Proposed Rules for Nationally Recognized Statistical Rating Organizations,* Release No. 34–57967 (June 16, 2008) [73 FR 36212].

[46] 17 CFR 229.1119.

[47] 17 CFR 229.1111.

[48] 15. U.S.C. 77g(d)(2).

[49] As one commentator has noted, the issuer or underwriter "may decide that it is easier not to retain such an outside firm than to have to describe its procedures and the information it reviewed and then provide a certification to the ratings agency * * *. In short, given the choice, issuers and underwriters might prefer the easier course of doing nothing." Examining Proposals to Enhance the Regulation of Credit Rating Agencies: Testimony before the U.S. Senate Committee on Banking, Housing, and Urban Affairs, 111th Congress, 1st session, p. 6 (2009) (Testimony of John Coffee).

commentators that submitted comments on these proposed requirements in the 2010 ABS Proposing Release were generally supportive.[50]

We are re-proposing an amendment to Item 1111 in this release to require similar disclosure.[51] As re-proposed, Item 1111(a)(8) of Regulation AB would require issuers to disclose how the assets in the pool deviate from the disclosed underwriting criteria and include data on the amount and characteristics of those assets that did not meet the disclosed standards. Issuers would be required to disclose the entity (*e.g.,* sponsor, originator, or underwriter) who determined that such assets should be included in the pool, despite not having met the disclosed underwriting standards, and what factors were used to make the determination. For example, this could include compensating factors or a determination that the exception was not material. If compensating or other factors were used, issuers would be required to provide data on the amount of assets in the pool that are represented as meeting each factor and the amount of assets that do not meet those factors. As discussed in the 2010 ABS Proposing Release, we believe that these revisions would further detail and clarify the type of disclosure that is required to be provided for ABS offerings with respect to deviations from disclosed underwriting standards and help elicit important information in areas that became problematic in the recent financial crisis. We also believe that this information would help provide investors with a fuller understanding of the quality and extent of the issuer's review of the assets (through hiring a third-party or otherwise) and how that relates to a determination to either include a loan in the pool or exclude it from the pool.

The requirements proposed here are substantially similar to what we proposed in the 2010 ABS Proposing Release. However, we are proposing an additional requirement, consistent with one commentator's suggestion, that the issuer disclose the entity (*e.g.,* sponsor, originator or underwriter) who determined that such assets would be included in the pool, despite not having met the disclosed underwriting standards.[52] We believe that this additional requirement would assist investors in understanding the entities along the securitization chain that may be directing decisions to include exception loans in the pool.

2. Exchange Act Section 15E(s)(4)(A) and New Form ABS–15G

As noted above, Section 932 of the Act amends Exchange Act Section 15E by adding, among other things, a new Section 15E(s)(4)(A) which sets forth the requirement that the issuer or underwriter of any ABS make publicly available the findings and conclusions of any third-party due diligence report obtained by the issuer or underwriter. Unlike Securities Act Section 7(d), which is expressly limited to registered ABS offerings, we believe that the requirements of Exchange Act Section 15E(s)(4)(A) were intended to apply to issuers and underwriters of both registered and unregistered offerings of ABS.[53] In this regard, we note that Section 941 of the Act amends Section 3(a) of the Exchange Act to add a definition of "asset-backed security" and that this definition includes asset-backed securities typically offered and sold in unregistered transactions. Further, unlike Section 945 of the Act, Section 932 does not refer to Section 7 of the Securities Act or registration statements filed under the Securities Act.

For registered ABS offerings, this disclosure, with respect to reports obtained by issuers, would be required to be provided in the prospectus as described above. In order to implement the disclosure requirement for unregistered offerings we are proposing new Rule 15Ga–2 under the Exchange Act. Proposed Rule 15Ga–2 would require an issuer of Exchange Act-ABS to file a new Form ABS–15G to disclose the findings and conclusions of any third party engaged for purposes of performing a review obtained by an issuer with respect to unregistered transactions.[54] Rule 15Ga–2 also would require an underwriter of Exchange Act-ABS to file Form ABS–15G with the same information for reports obtained by an underwriter in registered and unregistered transactions. Proposed Form ABS–15G would be filed with the Commission on EDGAR.

We are proposing that Form ABS–15G be required to be filed five business days prior to the first sale of the offering. This requirement, if adopted, would allow investors and NRSROs time to consider the disclosure about a third-party's findings and conclusions regarding its review of the pool assets.[55]

We recognize that public disclosure of information relating to an unregistered offering could raise concerns regarding an issuer's or underwriter's reliance on the private offering exemptions and safe harbors under the Securities Act.[56] We intend for Form ABS–15G to be used for both registered and unregistered ABS transactions (although as we note below, if the information has already been provided in a prospectus for a registered transaction, it need not be provided again in Form ABS–15G). We are of the view that issuers and underwriters can disclose information required by Rule 15Ga–2 without jeopardizing reliance on those exemptions and safe harbors, provided that the only information made publicly available is that which is required by the proposed rule, and the issuer does not otherwise use Form ABS–15G to offer or sell securities or in a manner that conditions the market for offers or sales of its securities.[57]

[50] *See, e.g.,* comment letters from Mortgage Bankers Association, Community Mortgage Banking Project, Realpoint, LLC, CFA Institute, and American Securitization Forum; *but see* comment letter from IPFS Corporation.

[51] *See* proposed Item 1111(a)(8) of Regulation AB.

[52] *See* Massachusetts AG comment letter.

[53] We note that "underwriter" is a term that is more typically used in connection with registered offerings, and the parties performing similar functions in unregistered transactions are typically referred to as placement agents or initial purchasers. We use the term "underwriter" here to describe all those persons.

[54] In a separate release implementing Section 943 of the Act, we are proposing new Form ABS–15G which would be required to be filed by any securitizer that offers asset-backed securities that would be subject to the federal securities laws. *See Disclosure for Asset-Backed Securities Required by Section 943 of the Dodd-Frank Wall Street Reform and Consumer Protection Act of 2010,* Release No. 33–9148 (Oct. 4, 2010) (the "Section 943 Release"). The term "securitizer" is defined in Section 15G of the Exchange Act, as added by the Act. Section 15E(s)(4)(B)–(D) also would require that when third-party due diligence services are employed by an NRSRO, an issuer or an underwriter, the person providing the services give a certification to any NRSRO that produces a rating. Section 15E(s)(4) also requires the Commission to issue rules regarding the format, content and disclosure of the certification. As noted above, the Commission will propose and adopt rules to address the other provisions of Section 15E(s)(4) not later than one year after the date of the Act's enactment.

[55] This five-day time period is intended to be consistent with the proposal in the 2010 ABS Proposing Release that would require that an ABS issuer using a shelf registration statement on proposed Form SF–3 file a preliminary prospectus containing transaction-specific information at least five business days in advance of the first sale of securities in the offering. Commentators' reactions to the proposed five-day requirement in the 2010 ABS Proposing Release were mixed, with some commentators suggesting that five days was longer than investors needed to consider the information in the prospectus (*e.g.,* comment letters from American Bar Association, Bank of America), while other commentators were supportive of the proposed five-day requirement (*e.g.,* comment letter from MetLife, Inc.).

[56] *See* 15 U.S.C. 77d(2), 17 CFR 230.144A, 17 CFR 230.501–508.

[57] Filing proposed Form ABS–15G would not foreclose the reliance of an issuer on the private offering exemption in the Securities Act and the safe harbor for offshore transactions from the registration provisions in Section 5 [15 U.S.C. 77e]. However, the inclusion of information beyond that required in proposed Rule 15Ga–2, may jeopardize such reliance by constituting a public offering or conditioning the market for the ABS being offered under an exemption.

Under our proposal, Form ABS–15G would be signed by the senior officer in charge of securitization of the depositor, if the form were filed to include the findings and conclusions of a third party hired by the issuer. We believe that requiring the senior officer in charge of securitization of the depositor to sign the form is consistent with other signature requirements for filings relating to asset-backed securities.[58] If the form included the findings and conclusions of a third party engaged by the underwriter, then the form would be signed by a duly authorized officer of the underwriter. We believe that requiring Form ABS–15G to be signed by a duly authorized officer of the underwriter would provide an incentive for the person who signs the form to review it for accuracy.

As discussed above, because we are proposing that, for registered offerings, the findings and conclusions of the report of a third party that is engaged by the issuer for purposes of asset review would be required to be included in a prospectus that is required to be filed with the Commission,[59] an issuer that has filed such information on EDGAR would satisfy the Exchange Act Section 15E(s)(4)(A) requirement to make publicly available a third-party report obtained by an ABS issuer. Thus, an ABS issuer that has disclosed the findings and conclusions of a third-party due diligence provider in the first prospectus that is required to be filed under Rule 424 of the Securities Act[60] and filed in accordance with Rule 424 would not be required to file a Form ABS–15G with the same information. However, any underwriter that has hired a third-party due diligence provider for the registered offering would still be required to file Form ABS–15G with the findings and conclusions of that third-party due diligence provider.

The market for Exchange Act-ABS is global.[61] Securitizers in the United States may sell ABS to offshore purchasers as part of a registered or unregistered offering. As proposed, these transactions would be subject to the requirements of proposed Rule 15Ga–2. In addition, U.S. investors may participate in offerings of ABS that are primarily offered by foreign securitizers to purchasers outside the United States. For example, a small proportion of a primarily offshore offering of ABS may be made available to U.S. investors pursuant to Section 4(2) of the Securities Act or Rule 144A under that Act.

We recognize that Exchange Act Section 15E(s)(4)(A) does not specify how its requirements apply to offshore transactions. As noted, consistent with Section 15E(s)(4)(A), proposed Rule 15Ga–2 would require issuers and underwriters to disclose information about unregistered transactions, including those sold in unregistered transactions outside the United States. Securities that are sold in foreign markets and assets originated in foreign jurisdictions may be subject to different laws, regulations, customs and practices which can raise questions as to the appropriateness of the disclosures called for under Form ABS–15G. Although our proposed rules are required by the Act, and we believe the added protections of our rules would benefit investors who purchase securities in these offerings, we are mindful that the imposition of a filing requirement in connection with private placements of ABS in the United States may result in foreign issuers seeking to avoid the filing requirement by excluding U.S. investors from purchasing portions of ABS primarily offered outside the United States, thus depriving U.S. investors of diversification and related investment opportunities.

Request for Comment

14. Are our disclosure proposals appropriate? Should we provide more specific requirements regarding the information that must be provided about the nature and scope of the review? If so, what should we require?

15. Should we consider Securities Act Section 7(d) and Exchange Act Section 15E(s)(4)(A) together and require disclosure of the findings and conclusions of the issuer's or third party's review of the assets, as proposed? Should we, instead, implement Section 15E(s)(4)(A) as part of the later rulemaking under Section 15E?

16. Should we require, as proposed, disclosure relating to assets that deviate from the disclosed origination underwriting criteria?

17. Should we require, as proposed, disclosure of the entity who determined that assets that did not meet the disclosed criteria should be included in the pool, despite not having met the disclosed underwriting criteria? Should issuers be required to disclose, as proposed, what factors were used to make the determination? Would this provide useful information for investors?

18. Is requiring the filing of information regarding the findings and conclusions of the third-party due diligence provider's report on proposed Form ABS–15G on EDGAR an appropriate way for issuers in unregistered offerings and for underwriters in registered and unregistered offerings to make this information publicly available? Should we allow Web site posting of the information instead? If so, how can we ensure the materials remain public? What advantages does Web site posting have over requiring that the information be filed on EDGAR? How do we ensure that investors and market participants have access to such information? What would be the liability implications of allowing the information to be posted on a Web site as an alternative to filing on EDGAR? Are there other appropriate means of making the findings and conclusions "publicly available"?

19. As discussed in request for comment number 10 above, we are aware that for certain types of ABS offerings an issuer may receive numerous reports from appraisers and engineers regarding the property underlying the loan. To what extent do the findings and conclusions of these reports help the issuer in performing its review? We are aware that CMBS issuers often provide the results of such reports to the "B-piece purchaser" to the extent that the findings of those reports differ from the representations and warranties regarding the assets in the underlying transaction agreements. Should we require that the issuer disclose all of the findings and conclusions provided to a B-piece buyer for purposes of the required disclosure in the registration statement? To what extent do the findings and conclusions of these reports assist rating agencies rating ABS? Should we require, for purposes of Section 15E(s)(4)(A), the findings and conclusions of such reports to be disclosed only to the extent that those findings and conclusions differ from the

[58] *See, e.g.,* signature requirement for Form 10–K (17 CFR 249.312). It is also consistent with our proposed signature requirements for the registration statement for ABS in the 2010 ABS Proposing Release.

[59] In the 2010 ABS Proposing Release, we proposed to require that an asset-backed issuer that offers securities off of a shelf registration statement file a preliminary prospectus at least five business days before first sale. We anticipate that this information would be required to be included in such preliminary prospectus, should we adopt that proposal.

[60] 17 CFR 230.424.

[61] Indeed, the International Organization of Securities Commissions (IOSCO) cites the recent crisis in the subprime markets, stemming from defaulted mortgage loans in the United States and affected by issues related to liquidity and transparency, as evidence of the interrelation of today's global markets. *See* Report on the Subprime Crisis—Final Report, Report of the Technical Committee of IOSCO, May 2008, available at *https://www.iosco.org/library/pubdocs/pdf/IOSCOPD273.pdf.*

representations and warranties or the complete list of findings and conclusions provided to a B-piece buyer?

20. Should we provide a temporary hardship exemption from electronic submission of Form ABS–15G with the Commission for filers who experience unanticipated technical difficulties that prevent timely preparation and submission of an electronic filing? Are there any reasons that ABS issuers and underwriters would not be able to submit Form ABS–15G on EDGAR in a timely fashion? If so, what would be an appropriate format for the filing? Would a paper filing be useful to investors and other market participants? Is timely availability of an electronic filing of this information important? If so, should we instead require that the information be posted on a Web site on the same day it was due to be filed on EDGAR, but require that the filer submit a confirming electronic copy of the information within a prescribed number of business days (*e.g.,* six) of filing the information in paper? [62]

21. Is there any reason Exchange Act Section 15E(s)(4)(A) should not apply to both registered and unregistered ABS transactions? If the requirement applies to both registered and unregistered transactions, should the universe of ABS offerings that are subject to the requirement be defined, as proposed, as an offering of asset-backed securities, as that term is defined in Section 3(a)(77) of the Exchange Act? Should the requirement be instead applicable to some other subcategory of asset-backed securities? For example, existing Exchange Act Section 15E(i) refers to a security or money market instrument issued by an asset pool or as part of any asset-backed or mortgage-backed securities transaction. Should our rule refer to this description of an asset-backed security instead of the proposed reference to Exchange Act Section 3(a)(77)? [63]

22. Should we exempt any issuers, underwriters or other parties from this requirement? Should we exempt issuers and underwriters of ABS that are not rated by an NRSRO from having to make publicly available the findings and conclusions of third-party due diligence reports? [64] As proposed, Rule 15Ga–2 would apply to issuers and underwriters of ABS that are exempted securities as defined in Section 3(a)(12) of the Exchange Act, including government securities and municipal securities. Should such exempted securities be exempt from this provision? [65]

23. Would the proposed requirement that Form ABS–15G be filed five business days prior to first sale provide investors with sufficient time to review the findings and conclusions contained therein? Would it provide NRSROs with sufficient time to take the included information into account in determining a rating? If not, what would be a more appropriate filing deadline and why? Are five business days also appropriate in unregistered offerings? Is there reason to require a different number of days in unregistered offerings?

24. Is our proposed signature requirement for Form ABS–15G appropriate? Is it necessary? Conversely, are there other appropriate individuals that are better suited to sign the form?

25. Should issuers of registered ABS offerings be required to provide notice on Form ABS–15G that they have provided information relating to the third-party due diligence report obtained by the issuer in a prospectus that is filed with the Commission?

26. Where an issuer, underwriter or NRSRO employs a third-party due diligence provider, Section 15E(s)(4)(B) of the Exchange Act also requires that the person providing the due diligence services provide to the NRSRO a written certification in the format and containing content to be determined by the Commission. The Commission is required to prescribe this form and content not later than one year after enactment of the Act. Although we are not proposing to implement this requirement in this release, we request comment on the appropriate format and content for this certification and how we can appropriately coordinate the rules and requirements proposed in this release with that statutory requirement.

27. Are there any extra or special considerations relating to offshore sales of ABS that we should take into account in our rules? Should our rules permit issuers or underwriters to exclude information from Form ABS–15G with respect to assets underlying "foreign-offered ABS," and if so, should foreign-offered ABS be defined to include Exchange Act-ABS that were initially offered and sold solely in accordance with Regulation S, the payments to holders of which are in non-U.S. currency, that are governed by non-U.S. law, and have foreign assets (*i.e.,* assets that are not originated in the United States) that comprise at least a majority of the value of the asset pool? For this purpose, should the foreign asset composition threshold be higher or lower (*e.g.,* 40%, 60%, or 80%)? Would another definition be more appropriate?

28. Should our rules require issuers that are foreign private issuers [66] to provide information on Form ABS–15G for those Exchange Act-ABS that are to be offered and sold in the United States pursuant to an exemption in an unregistered offering, as proposed? Instead, should our rules only require disclosure about Exchange Act-ABS as to which more than a certain percentage *(e.g.,* 5%, 10% or 20%) of any class of such ABS is sold to U.S. persons?

29. Should we include requirements tailored to revolving asset master trusts? For example, should we include a disclosure requirement in Exchange Act Form 8–K requiring that the issuer provide updated disclosure on its review or due diligence with respect to accounts or assets that are added to the pool after the offering transaction has been completed? Should this be a requirement for each Form 10–D or should it be provided on a quarterly basis instead?

III. General Request for Comment

We request comment on the specific issues we discuss in this release, and on any other approaches or issues that we should consider in connection with the proposed amendments. We seek comment from any interested persons, including investors, asset-backed issuers, sponsors, originators, servicers, trustees, disseminators of EDGAR data, industry analysts, EDGAR filing agents, and any other members of the public.

IV. Paperwork Reduction Act

Certain provisions of the proposed rule amendments contain "collection of information" requirements within the

[62] *See* Rule 201 of Regulation S–T [17 CFR 232.201].

[63] Rules relating to NRSROs have used this terminology, and we have said that this refers to a "broad category of financial instrument that includes, but is not limited to, asset-backed securities such as residential mortgage-backed securities and to other types of structured debt instruments such as collateralized debt obligations, including synthetic and hybrid CDOs, or collateralized loan obligations." *See, e.g.,* fn. 3 of *Amendments to Rules for Nationally Recognized Statistical Rating Organizations,* Release No. 34–61050 (Nov. 23, 2009)[74 FR 63832].

[64] For example, Fannie Mae and Freddie Mac are government sponsored enterprises ("GSEs") that purchase mortgage loans and issue or guarantee mortgage-backed securities ("MBS"). MBS issued or guaranteed by these GSEs have been, and continue to be, exempt from registration under the Securities Act and reporting under the Exchange Act. These securities have not been, and are not currently, rated by a credit rating agency.

[65] Exchange Act "exempted securities" include government securities and municipal securities, as defined under the Exchange Act. For example, MBS issued by the Government National Mortgage Association are fully modified pass-through securities guaranteed by the full faith and credit of the United States government. *See http://www.ginniemae.gov/.*

[66] 17 CFR 240.3b–4.

meaning of the Paperwork Reduction Act of 1995 (PRA).[67] The Commission is submitting these proposed amendments and proposed rules to the Office of Management and Budget (OMB) for review in accordance with the PRA.[68] An agency may not conduct or sponsor, and a person is not required to comply with, a collection of information unless it displays a currently valid control number. The titles for the collections of information are:[69]

(1) "Form ABS–15G" (a proposed new collection of information);

(2) "Form S–1" (OMB Control No. 3235–0065);

(3) "Form S–3" (OMB Control No. 3235–0073); and

(4) "Regulation S–K" (OMB Control No. 3235–0071).

Compliance with the proposed amendments would be mandatory. Responses to the information collections would not be kept confidential and there would be no mandatory retention period for proposed collection of information.

Our PRA burden estimates for the proposed amendments are based on information that we receive on entities assigned to Standard Industrial Classification Code 6189, the code used with respect to ABS, as well as information from outside sources.[70] When possible, we base our estimates on an average of the data that we have available for the years 2004 through 2009.

1. Form ABS–15G

Form ABS–15G is a new collection of information that relates to proposed disclosure requirements for issuers or underwriters of any ABS. Under the proposed amendments, issuers or underwriters would be required to make publicly available the findings and conclusions of any third party engaged by the issuer or underwriter for the purposes of performing a review of the underlying assets. The burden assigned to Form ABS–15G reflects the cost of preparing and filing the form on EDGAR. The proposed Form ABS–15G would be filed by issuers of unregistered offerings of ABS, and underwriters of registered and unregistered offerings of ABS. During 2004 through 2009, there was an average of 958 registered offerings of ABS per year. We assume for purposes of this PRA that third-party due diligence reports typically are obtained only in RMBS and CMBS transactions. This assumption is based on our belief that the smaller the average loan in the pool of assets and the higher the frequency with which the pool loans revolve the less likely it is that there will be a third-party due diligence report. We estimate that RMBS and CMBS comprised 54% (or 517) of the registered offerings during the above time frame.[71] We assume that not all offerings of RMBS and CMBS will involve a third-party due diligence report. We estimate that 75% of RMBS and CMBS offerings would involve a third-party due diligence report. Thus, we estimate that 388 of all registered offerings ($958 \times 0.54 \times 0.75$) involve the hiring of a third-party due diligence provider by an underwriter. Because issuers would include the findings and conclusions of any third-party due diligence report in a prospectus in registered offerings, only underwriters would file a Form ABS–15G in registered ABS offerings.

In addition, over the period 2004 through 2009, the average number of Rule 144A ABS offerings per year was 716.[72] Because there may be additional ABS offerings that would have been subject to the requirement to file Form ABS–15G (*e.g.,* offerings of asset-backed securities that relied upon Section 4(2) for an exemption from registration), we assume that there would be a total of 800 offerings of asset-backed securities that could be subject to our proposed Form ABS–15G filing requirement. Using the same assumptions and percentage estimates as above, we estimate that 324 ($800 \times 0.54 \times 0.75$) of all unregistered ABS offerings involve the hiring of a third-party due diligence provider by the issuer and underwriter or placement agent. Therefore, we estimate that approximately 712 (388 + 324) Forms ABS–15G would be filed annually. Our burden estimate is based on the assumption that the issuer's or underwriter's costs would be limited since Rule 15Ga–2 only requires that issuers or underwriters make publicly available the findings and conclusions they obtained from a third-party. We estimate that the burden to an issuer or underwriter of making the findings and conclusions of a third-party publicly available will be approximately 5 hours to prepare, review and file the Form ABS–15G. This would amount to 3,560 burden hours (5 hours $\times$ 712 forms). We allocate 75%, or 2,670 ($0.75 \times 3{,}560$), of those hours to internal burden hours and 25% for professional costs at $400 per hour for total outside costs of $356,000 ($\$400 \times 0.25 \times 3{,}560$).

2. Rule 15Ga–2

Rule 15Ga–2 contains the requirements for disclosure that an issuer must provide in Form ABS–15G filings described above. The collection of information requirements, however, are reflected in the burden hours estimated for Form ABS–15G. Therefore, Rule 15Ga–2 does not impose any separate burden.

3. Forms S–1 and S–3

We are proposing amendments to Item 1111 of Regulation AB to increase the disclosure that would be required in offerings of ABS registered on either Forms S–1 or S–3. The disclosure required under Item 1111 would include disclosure that otherwise would be required by proposed Exchange Act Rule 15Ga–2 (which implements Section 15E(s)(4)(A) of the Exchange Act), as well as additional information about issuer reviews not required by proposed Rule 15Ga–2. The amendment to Item 1111 would require issuers to disclose how the assets in the pool deviate from the disclosed underwriting criteria, and include data on the amount and characteristics of those assets that did not meet the disclosed standards. Issuers would be required to disclose the entity who determined that such assets should be included in the pool and what factors were used to make the determination. Under proposed Rule 193, if an issuer employs a third party to perform the review, the third party must be named in the registration statement and consent to being named as an expert in accordance with Securities Act Rule 436. Thus, we anticipate that issuers will incur a burden in obtaining a consent from the third party.

We believe that the proposed requirements would increase the annual incremental burden to issuers by 30 hours per form.[73] For registration statements, we estimate that 25% of the burden of preparation is carried by the company internally and that 75% of the burden is carried by outside

[67] 44 U.S.C. 3501 *et seq.*

[68] 44 U.S.C. 3507(d) and 5 CFR 1320.11.

[69] The paperwork burden from Regulation S–K is imposed through the forms that are subject to the requirements in those regulations and is reflected in the analysis of those forms. To avoid a Paperwork Reduction Act inventory reflecting duplicative burdens and for administrative convenience, we assign a one-hour burden to Regulation S–K.

[70] We rely on two outside sources of ABS issuance data. We use the ABS issuance data from Asset-Backed Alert on the initial terms of offerings, and we supplement that data with information from Securities Data Corporation (SDC).

[71] This estimate is based on data from Securities Data Corporation (SDC).

[72] This is based on ABS issuance data from Asset-Backed Alert and information from SDC.

[73] This does not reflect burdens associated with the review that would be required as a result of proposed Rule 193, which we believe does not impose a collection of information requirement for purposes of our PRA analysis.

professionals retained by the registrant at an average cost of $400 per hour. From 2004 through 2009, an estimated average of four offerings was registered annually on Form S–1 by ABS issuers. We believe that the proposed requirements would result in an increase to the internal burden to prepare Form S–1 of 30 burden hours (0.25 × 30 × 4) and an increase in outside costs of $36,000 ($400 × 0.75 × 30 × 4). During 2004 through 2009, we estimate an annual average of 929 offerings of ABS registered on Form S–3. Therefore, we believe that the proposed requirements would result in an increase to the internal burden to prepare Form S–3 filings of 6,968 burden hours (0.25 × 30 × 929) and a total cost of $8,361,000 (400 × 0.75 × 30 × 929).

Regulation S–K

Regulation S–K includes the item requirements in Regulation AB and contains the disclosure requirements for filings under both the Securities Act and the Exchange Act. In 2004, we noted that the collection of information requirements associated with Regulation S–K as it applies to ABS issuers are included in Form S–1 and Form S–3.[74] The proposed changes would revise Regulation S–K. The collection of information requirements, however, are reflected in the burden hours estimated for the various Securities Act and Exchange Act forms related to ABS issuers. The rules in Regulation S–K do not impose any separate burden. Consistent with historical practice, we have retained an estimate of one burden hour for Regulation S–K for administrative convenience.

Form	Current annual responses	Proposed annual responses	Current burden hours	Increase in burden hours	Proposed burden hours	Current professional costs	Increase in professional costs	Proposed professional costs
S–1	1,168	1,168	247,982	30	248,012	$297,578,400	$36,000	$297,614,400
S–3	2,065	2,065	236,959	6,968	243,927	284,350,500	8,361,000	292,711,500
Form ABS–15G		712		2,670	2,670		356,000	356,000
Total				9,668			8,753,000	

Request for Comment

We request comments in order to evaluate (1) Whether the proposed collection of information is necessary for the proper functioning of the agency, including whether the information would have practical utility; (2) the accuracy of our estimate of the burden of the proposed collection of information; (3) whether there are ways to enhance the quality, utility, and clarity of the information to be collected; and (4) whether there are ways to minimize the burden of the collection of information on those who are to respond, including through the use of automated collection techniques or other forms of information technology.

Any member of the public may direct to us any comments concerning the accuracy of these burden estimates and any suggestions for reducing these burdens. Persons submitting comments on the collection of information requirements should direct the comments to the Office of Management and Budget, Attention: Desk Officer for the Securities and Exchange Commission, Office of Information and Regulatory Affairs, Washington, DC 20503, and should send a copy to Elizabeth M. Murphy, Secretary, Securities and Exchange Commission, 100 F Street, NE., Washington, DC 20549–1090, with reference to File No. S7–26–10. Request for materials submitted to OMB by the Commission with regard to these collections of information should be in writing, refer to File No. S7–26–10, and be submitted to the Securities and Exchange Commission, Office of Investor Education and Advocacy, 100 F Street, NE., Washington, DC 20549–0213. OMB is required to make a decision concerning the collection of information between 30 and 60 days after publication of this release. Consequently, a comment to OMB is best assured of having its full effect if OMB receives it within 30 days of publication.

V. Benefit-Cost Analysis

The proposed amendments to our regulations for ABS relate to requiring an issuer of an ABS to perform a review of the assets underlying the security. We are proposing rules that are intended to implement the requirements under new Section 7(d) of the Securities Act. We also are proposing rules that are intended to implement part of new Section 15E(s)(4) of the Exchange Act. First, we are proposing a new Securities Act rule to require issuers of registered offerings of asset-backed securities to perform a review of the assets underlying the asset-backed securities. Second, we also are proposing new requirements in Regulation AB to require disclosure regarding:

- The nature of the review of assets conducted by an ABS issuer;
- The findings and conclusions of a review of assets conducted by an issuer or third party;
- Data on assets in the pool that do not meet the underwriting standards; and
- Disclosure regarding which entity determined that the assets should be included in the pool, despite not having met the underwriting standards and what factors were considered in making this determination.

We also are proposing to require that an issuer or underwriter of any Exchange Act-ABS be required to file the findings and conclusions of a third-party due diligence report on a new form filed on EDGAR.

A. Benefits

The proposed amendments are designed to increase investor protection by implementing the requirement on issuers to perform a review of the underlying assets and disclose the nature of the review. This should lead to enhanced transparency in offerings of ABS, and result in an increase in investors' understanding of the underlying pool of assets. We believe that the proposal to require the issuer to perform a review of the assets underlying an ABS is likely to result in an improvement in the quality of securitized loan pools to the extent that these reviews are able to identify non-compliant or otherwise low-quality assets. It also will allow the public to determine the adequacy and level of due diligence services provided by a third party which is consistent with the purposes of Section 932 of the Act.[75] We

[74] *See* 2004 Regulation AB Adopting Release.

[75] *See* S. Rep. No. 111–176, at 121 (2010).

expect that requiring a review of the assets will result in loan pools of higher quality.

Further, the description of the nature of the review and disclosure of findings and conclusions should encourage more rigorous asset reviews, whether by issuers or third parties engaged to perform the asset reviews. These disclosures would complement the requirement to perform a review by improving their quality. We also believe that the proposal to make publicly available on EDGAR the findings and conclusions of third-party due diligence reports in ABS offerings will allow the public to better assess and more easily determine the adequacy and level of due diligence services provided by a third party. This benefit of the proposed rule is consistent with the purposes of Section 932 of the Act as indicated in the legislative history of the Act which states that "many analysts point to the decline of due diligence as a factor that contributed to the poor performance of asset-backed securities during the crisis." [76] We also note the reference in the Act's legislative history to a need to address the lack of due diligence regarding information on which ratings are based.[77] Finally, although issuers in registered offerings would not be required to use a third party to satisfy the review requirement, as a condition to such use, a third party would be required to consent to being named in the registration statement and thereby accept potential expert liability, which should increase the quality of that review. In registered offerings, the potential expert liability for the findings of third-party reviews provides accountability and creates stronger incentives to perform high-quality reviews that protect investors. The resulting disclosures reduce the information risk of investing in these securities. Our proposal to require disclosure by the issuer of the nature, findings and conclusions of its review could result in improved asset review practices. Moreover, this could be useful to investors if they prefer investing in securities about which there is disclosure indicating a more robust review over investing in securities about which the disclosure indicates a less robust review.

The proposed requirement to disclose exception loans should provide important information to investors regarding the characteristics of the pool that may otherwise not be publicly known. For those issuers that currently provide asset-level information about the pool, an investor might be able to determine some information about the number of exception loans; however, even where this could be determined, the proposals would reduce investors' cost of information production by reducing duplicative efforts on their part to gather such data on their own or purchase it through data intermediaries. We also are proposing to require more information about the entities that have determined that an asset that deviates from underwriting standards should, nonetheless, be included in the pool. Because third-party asset review providers typically work for sponsors, there is potentially a conflict of interest when a sponsor can waive or overrule the third-party's conclusions that insufficient compensating factors exist to allow inclusion of an asset that does not meet the underwriting standards governing the pool.[78] We expect that information about which entity made the determination to include an asset in the pool despite not having met the underwriting standards will provide investors with information to gauge whether the decision to accept such loans otherwise may be subject to a conflict of interest. We also expect this will reduce the cost of information asymmetry and could be useful information to investors because investors may be able to price a securitization of a pool of assets more accurately, and to credit rating agencies in assigning more informed credit ratings.

Our proposal to require disclosure of the nature of the review, as well as the findings and conclusions of any such review, may increase investor confidence in the market for ABS. This proposal, in conjunction with the proposal to require that issuers perform a review, could allow investors to better understand the information about the asset pool and credit risk of the asset pool including whether the asset pool consists of loans to borrowers without the ability to repay the loans, or is composed of loans made to creditworthy borrowers.

In addition, Section 15E(s)(4)(A) of the Exchange Act, as added by Section 932 of the Act, which requires issuers and underwriters to make the findings and conclusions of third-party due diligence reports publicly available, is aimed at improving the quality of information received by rating agencies issuing ratings on asset-backed securities in registered and unregistered offerings.[79] We have proposed to make this information publicly available on EDGAR. By requiring the proposed Form ABS–15G to be filed on EDGAR, the information that would be required would be housed in a central repository that would preserve continuous access to the information.

B. Costs

The proposed rule would implement the requirement that all issuers of registered ABS offerings perform a review of the underlying assets and that those issuers disclose the nature of their review. Although some issuers of ABS may currently perform a review of the underlying assets, ABS issuers in registered offerings may incur additional costs to perform more extensive reviews, whether the issuer performs the review itself, or hires a third-party to perform the review. It is possible that by not establishing a minimum level of review and leaving the determination of the appropriate level of review to each individual issuer, a lack of a uniform standard could result in investors having difficulty comparing the level of review and the disclosures about the review among various issuers and asset classes.

It is possible that by not establishing a minimum level of review and leaving the determination of the appropriate level of review to each individual issuer, some issuers who otherwise may have performed a more thorough review to meet a proposed minimum level of review may design their reviews to accomplish no more than what is required by the rule.

As proposed, Rule 193 permits an issuer to rely on a third party to perform the required review, provided the review satisfies the standard in Rule 193 and the third party consents to be named in the registration statement. Some asset classes may not have third-party due diligence providers available to be engaged to conduct a review. In instances where an issuer must conduct the review, we believe that the costs of conducting these reviews will not exceed the costs of engaging third parties to conduct the reviews. Third-party due diligence providers are not registered with the Commission and some may not be subject to professional standards. Further, it is possible that third-party providers may lack sufficient capabilities to provide the review for which they are retained. However, our rules would subject third-party due diligence providers in registered transactions to potential expert liability for the disclosure regarding the findings and conclusions of their review of the assets. For certain firms, however, in particular smaller due diligence entities

[76] *See id.*

[77] *See id.*

[78] *See e.g.,* comment letter from Massachusetts AG.

[79] *See id.*

that may lack the financial resources to cover their potential liabilities, expert liability may not be a significant deterrent because these firms have less financial resources exposed to potential liability and may not be as concerned about losing potential claims compared to firms that have more financial resources exposed to liability. This may create a burden on both qualified providers of due diligence and the securitizers that hire them.

We acknowledge that this requirement would impose costs on issuers and third-party due diligence providers, and they may be required to adjust their practices (and prices in the case of third parties) to account for this new requirement.

Finally, for unregistered offerings, the disclosure of the results of an asset review is required only for third-party reviews. This may indirectly result in discouraging issuers and underwriters from obtaining third-party reviews in unregistered offerings.

Our proposals requiring issuers to disclose the nature of the review as well as the findings and conclusions of such review will impose a disclosure burden. In addition, filers will make the information proposed to be required available on EDGAR, which requires obtaining authorization codes and adherence to formatting instructions. For purposes of the PRA, we estimate that the new disclosure would cause an increase in the total cost of preparing Forms S–1 and S–3 of $13,995,000. In addition, for purposes of the PRA, we estimate that the cost for including third-party findings in Form ABS–15G would be $356,000.

Request for Comment

We seek comments and empirical data on all aspects of this Benefit-Cost Analysis including identification and quantification of any additional costs and benefits. Specifically, we ask the following:

- What would be the costs to an issuer of performing a review of the underlying assets? How would this compare to the cost of hiring a third-party provider to perform the review?
- What would be the additional costs arising from the application of expert's liability to third-parties performing reviews for issuers?

VI. Consideration of Burden on Competition and Promotion of Efficiency, Competition and Capital Formation

Section 23(a) of the Exchange Act [80] requires the Commission, when making rules and regulations under the Exchange Act, to consider the impact a new rule would have on competition. Section 23(a)(2) prohibits the Commission from adopting any rule that would impose a burden on competition not necessary or appropriate in furtherance of the purposes of the Exchange Act. Section 2(b) of the Securities Act [81] and Section 3(f) of the Exchange Act [82] require the Commission, when engaging in rulemaking that requires it to consider whether an action is necessary or appropriate in the public interest, to consider, in addition to the protection of investors, whether the action would promote efficiency, competition, and capital formation. Below, we address these issues for each of the proposed, substantive changes to offerings of ABS.

As a result of the financial crisis and subsequent events, the market for securitization has declined due, in part, to perceived uncertainty about the accuracy of information about the pools backing the ABS and perceived problems in the securitization process that affected investors' willingness to participate in these offerings.[83] Greater transparency of the review performed on the underlying assets would decrease the uncertainty about pool information and, thus, should help investors price these products more accurately. The proposed requirements are likely to positively affect pricing, efficiency, and capital allocation in ABS capital markets.

Finally, the introduction of expert liability on the third-party review providers may have consequences for the competition in this market. The possibility of expert liability may provide an incentive for due diligence providers to improve the quality of their reviews. Thus, one possible market outcome is for reviewers to compete on the quality of their services, because competing on price accompanied by lower quality may cease to be economically viable given the potential liability.

On the other hand, the possibility of expert liability may not be a significant deterrent for smaller due diligence providers that do not have the financial resources to cover their potential liabilities. This may adversely affect competition in both the market for the provision of due diligence and the market for ABS. Diligent providers of asset reviews may be pressured to decrease their standards, their prices or both. In addition, ABS with reviews obtained from such parties may affect the pricing of competing securities. Alternatively, the possibility of expert liability could be an incentive for due diligence providers to improve their capabilities.

In summary, taken together the proposed amendments and regulations implement Congress' mandate under the Act and are designed to improve investor protection, improve the quality of the assets underlying an ABS, and increase transparency to market participants. We believe that the proposals also would improve investors' confidence in asset-backed securities and help recovery in the asset-backed securities market with attendant positive effects on efficiency, competition and capital formation.

We request comment on our proposed amendments. We request comment on whether our proposals would promote efficiency, competition, and capital formation. Commentators are requested to provide empirical data and other factual support for their views, if possible.

VII. Small Business Regulatory Enforcement Fairness Act

For purposes of the Small Business Regulatory Enforcement Fairness Act of 1996,[84] a rule is "major" if it has resulted, or is likely to result in:

- An annual effect on the U.S. economy of $100 million or more;
- A major increase in costs or prices for consumers or individual industries; or
- Significant adverse effects on competition, investment, or innovation.

We request comment on whether our proposed amendments would be a "major rule" for purposes of the Small Business Regulatory Enforcement Fairness Act. We solicit comment and empirical data on:

- The potential effect on the U.S. economy on an annual basis;
- Any potential increase in costs or prices for consumers or individual industries; and
- Any potential effect on competition, investment, or innovation.

VIII. Regulatory Flexibility Act Certification

The Commission hereby certifies pursuant to 5 U.S.C. 605(b) that the proposals contained in this release, if adopted, would not have a significant economic impact on a substantial number of small entities. The proposals relate to the registration, disclosure and reporting requirements for asset-backed

[80] 15 U.S.C. 78w(a).

[81] 15 U.S.C. 77b(b).

[82] 15 U.S.C. 78c(f).

[83] *See, e.g.,* David Adler, *A Flat Dow for 10 Years? Why it Could Happen,* Barrons (Dec. 28, 2009).

[84] Pub. L. 104–121, Title II, 110 Stat. 857 (1996).

securities under the Act, the Securities Act and the Exchange Act. Securities Act Rule 157[85] and Exchange Act Rule 0–10(a)[86] defines an issuer, other than an investment company, to be a "small business" or "small organization" if it had total assets of $5 million or less on the last day of its most recent fiscal year. As the depositor and issuing entity are most often limited purpose entities in an ABS transaction, we focused on the sponsor in analyzing the potential impact of the proposals under the Regulatory Flexibility Act. Based on our data, we only found one sponsor that could meet the definition of a small broker-dealer for purposes of the Regulatory Flexibility Act.[87] In addition, we do not believe that any underwriter of ABS would meet the definition of a small entity for purposes of the Regulatory Flexibility Act.[88] Accordingly, the Commission does not believe that the proposals, if adopted, would have a significant economic impact on a substantial number of small entities.

IX. Statutory Authority and Text of Proposed Rule and Form Amendments

We are proposing the new rules and amendments contained in this document under the authority set forth in Sections 6, 7, 10, 19(a), and 28 of the Securities Act, and Sections 3(b), 15E, 15G, 23(a), 35A and 36 of the Exchange Act.

List of Subjects in 17 CFR Parts 229, 230, 240, and 249

Advertising, Reporting and recordkeeping requirements, Securities.

For the reasons set out above, Title 17, Chapter II of the Code of Federal Regulations is proposed to be amended as follows:

PART 229—STANDARD INSTRUCTIONS FOR FILING FORMS UNDER SECURITIES ACT OF 1933, SECURITIES EXCHANGE ACT OF 1934 AND ENERGY POLICY AND CONSERVATION ACT OF 1975—REGULATION S–K

1. The authority citation for part 229 continues to read in part as follows:

Authority: 15 U.S.C. 77e, 77f, 77g, 77h, 77j, 77k, 77s, 77z–2, 77z–3, 77aa(25), 77aa(26), 77ddd, 77eee, 77ggg, 77hhh, 777iii, 77jjj, 77nnn, 77sss, 78c, 78i, 78j, 78*l,* 78m, 78n, 78o, 78u–5, 78w, 78*ll,* 78mm, 80a–8, 80a–9, 80a–20, 80a–29, 80a–30, 80a–31(c), 80a–37, 80a–38(a), 80a–39, 80b–11, and 7201 *et seq.;* and 18 U.S.C. 1350, unless otherwise noted.

* * * * *

2. Amend § 229.1111 by:

a. Revising the introductory text to paragraph (a):

b. Adding paragraphs (a)(7) and (a)(8).

The revision and additions read as follows:

§ 229.1111 (Item 1111) Pool assets.

* * * * *

(a) *Information regarding pool asset types and selection criteria.* Provide the following information:

* * * * *

(7)(i) The nature of a review of the assets performed by an issuer or sponsor (required by § 230.193), including whether the issuer of any asset-backed security engaged a third party for purposes of performing a review of the pool assets underlying an asset-backed security; and

(ii) The findings and conclusions of the review of the assets by the issuer, sponsor, or third party described in paragraph (a)(7)(i) of this section.

Instruction to Item 1111(a)(7): If the issuer has engaged a third party for purposes of performing the review of assets, the issuer must provide the name of the third-party reviewer and comply with the requirements of § 230.436 of this chapter.

(8) If any assets in the pool deviate from the disclosed underwriting criteria, disclose how those assets deviate from the disclosed underwriting criteria and include data on the amount and characteristics of those assets that did not meet the disclosed standards. Disclose which entity (*e.g.,* sponsor, originator, or underwriter) determined that those assets should be included in the pool, despite not having met the disclosed underwriting standards, and what factors were used to make the determination, such as compensating factors or a determination that the exception was not material. If compensating or other factors were used, provide data on the amount of assets in the pool that are represented as meeting each such factor and the amount of assets that do not meet those factors.

* * * * *

PART 230—GENERAL RULES AND REGULATIONS, SECURITIES ACT OF 1933

3. The authority citation for part 230 continues to read in part as follows:

Authority: 15 U.S.C. 77b, 77c, 77d, 77f, 77g, 77h, 77j, 77r, 77s, 77z–3, 77sss, 78c, 78d, 78j, 78*l,* 78m, 78n, 78o, 78t, 78w, 78*ll*(d), 78mm, 80a–8, 80a–24, 80a–28, 80a–29, 80a–30, and 80a–37, unless otherwise noted.

* * * * *

Section 230.193 is also issued under sec. 943, Pub. L. 111–203, 124 Stat. 1376.

* * * * *

4. Add § 230.193 to read as follows:

§ 230.193 Review of underlying assets in asset-backed securities transactions.

An issuer of an "asset-backed security", as that term is defined in Section 3(a)(77) of the Securities Exchange Act of 1934 (15 U.S.C. 78c(a)(77)), offering and selling such a security pursuant to a registration statement shall perform a review of the pool assets underlying the asset-backed security. The issuer may conduct the review or an issuer may employ a third party engaged for purposes of performing the review provided the third party is named in the registration statement and consents to being named as an expert in accordance with § 230.436 of this chapter.

PART 240—GENERAL RULES AND REGULATIONS, SECURITIES EXCHANGE ACT OF 1934

5. The authority citation for part 240 is amended by adding authority for § 240.15Ga-2 to read as follows:

Authority: 15 U.S.C. 77c, 77d, 77g, 77j, 77s, 77z–2, 77z–3, 77eee, 77ggg, 77nnn, 77sss, 77ttt, 78c, 78d, 78e, 78f, 78g, 78i, 78j, 78j–1, 78k, 78k–1, 78*l,* 78m, 78n, 78o, 78p, 78q, 78s, 78u–5, 78w, 78x, 78*ll,* 78mm, 80a–20, 80a–23, 80a–29, 80a–37, 80b–3, 80b–4, 80b–11, and 7201 *et seq.;* and 18 U.S.C. 1350 and 12 U.S.C. 5221(e)(3), unless otherwise noted.

* * * * *

Section 240.15Ga–2 is also issued under sec. 943, Pub. L. 111–203, 124 Stat. 1376.

* * * * *

6. Add § 240.15Ga–2 to read as follows:

§ 240.15Ga–2 Findings and conclusions of third-party due diligence reports.

(a) The issuer or underwriter of any "asset-backed security" (as that term is defined in Section 3(a)(77) of the Securities Exchange Act of 1934 (15 U.S.C. 78c(a)(77)) shall file Form ABS–15G (17 CFR 249.1400) containing the findings and conclusions of any report of a third party engaged for purposes of performing a review of the pool assets obtained by the issuer or underwriter five business days prior to the first sale in the offering.

(b) If the issuer in a registered offering of asset-backed securities has included the information required by paragraph (a) of this section in the first prospectus that is required to be filed under 17 CFR 230.424 for that offering and filed in

[85] 17 CFR 230.157.

[86] 17 CFR 240.0–10(a).

[87] This is based on data from Asset-Backed Alert.

[88] This is based on data from Asset-Backed Alert.

accordance with 17 CFR 230.424, then the issuer is not required to file Form ABS–15G (17 CFR 249.1400) to include the same information.

PART 249—FORMS, SECURITIES EXCHANGE ACT OF 1934

7. The authority citation for part 249 is amended by adding an authority for § 249.1400 to read as follows:

Authority: 15 U.S.C. 78a *et seq.* and 7201 *et seq.;* and 18 U.S.C. 1350, unless otherwise noted.

* * * * *

Section 249.1400 is also issued under sec. 943, Pub. L. 111–203, 124 Stat. 1376.

* * * * *

8. Revise Subpart O, as proposed at 75 FR 62736, October 13, 2010, to read as follows:

Subpart O—Forms for Securitizers of Asset-Backed Securities

§ 249.1400 Form ABS–15G, Asset-backed securitizer report pursuant to Section 15G of the Securities Exchange Act of 1934.

This form shall be used for reports of information required by Rule 15Ga–1 (§ 240.15Ga–1 of this chapter) and Rule 15Ga–2 (§ 240.15Ga–2 of this chapter).

Note: The text of Form ABS–15G does not, and this amendment will not, appear in the Code of Federal Regulations.

UNITED STATES SECURITIES AND EXCHANGE COMMISSION

Washington, D.C. 20549

FORM ABS–15G

ASSET-BACKED SECURITIZER REPORT PURSUANT TO SECTION 15G OF THE SECURITIES EXCHANGE ACT OF 1934

Check the appropriate box to indicate the filing obligation to which this form is intended to satisfy:

_____ Rule 15Ga–1 under the Exchange Act (17 CFR 240.15Ga–1)

_____ Rule 15Ga–2 under the Exchange Act (17 CFR 240.15Ga–2)

Date of Report (Date of earliest event reported) _____

Commission File Number of securitizer: _____

Central Index Key Number of securitizer: _____

_____

Name and telephone number, including area code, of the person to contact in connection with this filing

For filings under Rule 15Ga–2, also provide the following information:

Central Index Key Number of depositor: _____

Commission File Number of depositor (if applicable): _____

_____

(Exact name of issuing entity as specified in its charter)

Central Index Key Number of issuing entity (if applicable): _____

Commission File Number of issuing entity (if applicable): _____

Central Index Key Number of underwriter (if applicable): _____

Commission File Number of underwriter (if applicable): _____

GENERAL INSTRUCTIONS

A. Rule as to Use of Form ABS–15G.

This form shall be used to comply with the requirements of Rules 15Ga–1 and 15Ga–2 under the Exchange Act (17 CFR 240.15Ga–1 and 17 CFR 240.15Ga–2).

B. Events To Be Reported and Time for Filing of Reports.

1. *Forms filed under Rule 15Ga–1.* In accordance with Rule 15Ga–1, file the information required by Part I in accordance with Item 1.01, Item 1.02, or Item 1.03, as applicable.

If the filing deadline for the information occurs on a Saturday, Sunday or holiday on which the Commission is not open for business, then the filing deadline shall be the first business day thereafter.

2. *Forms filed under Rule 15Ga–2.* In accordance with Rule 15Ga–2, file the information required by Part II no later than five business days prior to the first sale of securities in the offering.

C. Preparation of Report.

This form is not to be used as a blank form to be filled in, but only as a guide in the preparation of the report on paper meeting the requirements of Rule 12b–12 (17 CFR 240.12b–12). The report shall contain the number and caption of the applicable item, but the text of such item may be omitted, provided the answers thereto are prepared in the manner specified in Rule 12b–13 (17 CFR 240.12b–13). All items that are not required to be answered in a particular report may be omitted and no reference thereto need be made in the report. All instructions should also be omitted.

D. Signature and Filing of Report.

1. *Forms filed under Rule 15Ga–1.* Any form filed for the purpose of meeting the requirements in Rule 15Ga–1 must be signed by the senior officer in charge of securitization of the securitizer.

2. *Forms filed under Rule 15Ga–2.* Any form filed for the purpose of meeting the requirements in Rule 15Ga–2 must be signed by the senior office in charge of securitization of the depositor if information required by Item 2.01 is required to be provided and must be signed by a duly authorized officer of the underwriter if information required by Item 2.02 is required to be provided.

3. *Copies of report.* If paper filing is permitted, three complete copies of the report shall be filed with the Commission.

INFORMATION TO BE INCLUDED IN THE REPORT

PART I—REPRESENTATION AND WARRANTY INFORMATION

Item 1.01 Initial Filing of Rule 15Ga–1 Representations and Warranties Disclosure

If any securitizer (as that term is defined in Section 15G(a) of the Securities Exchange Act of 1934), issues an asset-backed security (as that term is defined in Section 3(a)(77) of the Securities Exchange Act of 1934), or organizes and initiates an asset-backed securities transaction by selling or transferring an asset, either directly or indirectly, including through an affiliate, to the issuer, provide the disclosures required by Rule 15Ga–1 (17 CFR 240.15Ga–1) at the time the securitizer, or an affiliate commences its first offering of the asset-backed securities after [compliance or effective date of the final rule], if the underlying transaction agreements contain a covenant to repurchase or replace an underlying asset for breach of a representation or warranty.

Item 1.02 Periodic Filing of Rule 15Ga–1 Representations and Warranties Disclosure

Each securitizer which was required to provide the information required by Item 1.01 of this form shall provide the disclosures required by Rule 15Ga–1 (17 CFR 240.15Ga–1) as of the end of each calendar month, to be filed not later than 15 calendar days after the end of such calendar month.

Item 1.03 Notice of Termination of Duty To File Reports Under Rule 15Ga–1

If any securitizer has no asset-backed securities outstanding (as that term is defined in Section 3(a)(77) of the Securities Exchange Act of 1934) held by non-affiliates, provide the date of the last payment on the last asset-backed security outstanding that was issued by or issued by an affiliate of the securitizer.

PART II—ASSET REVIEW INFORMATION

Item 2.01 Findings and Conclusions of a Third Party Engaged by the Issuer To Review Assets

Provide the disclosures required by Rule 15Ga–2 (17 CFR 240.15Ga–2) for any report by a third party engaged by the issuer for the purpose of reviewing assets underlying an asset-backed security.

Item 2.02 Findings and Conclusions of a Third-Party Engaged by the Underwriter To Review Assets

Provide the disclosures required by Rule 15Ga–2 (17 CFR 240.15Ga–2) for any third-party engaged by the underwriter for the purpose of reviewing assets underlying an asset-backed security.

SIGNATURES

Pursuant to the requirements of the Securities Exchange Act of 1934, the reporting entity has duly caused this report to be signed on its behalf by the undersigned hereunto duly authorized.

(Depositor, Securitizer, or Underwriter)
Date

(Signature)*

*Print name and title of the signing officer under his signature.

By the Commission.

Dated: October 13, 2010.

Elizabeth M. Murphy,

Secretary.

[FR Doc. 2010–26172 Filed 10–18–10; 8:45 am]

BILLING CODE 8011–01–P

DEPARTMENT OF THE TREASURY

Internal Revenue Service

26 CFR Part 1

[REG–132554–08]

RIN 1545–BI16

Additional Rules Regarding Hybrid Retirement Plans

AGENCY: Internal Revenue Service (IRS), Treasury.

ACTION: Notice of proposed rulemaking and notice of public hearing.

SUMMARY: This document contains proposed regulations providing guidance relating to certain provisions of the Internal Revenue Code (Code) that apply to hybrid defined benefit pension plans. These regulations would provide guidance on changes made by the Pension Protection Act of 2006, as amended by the Worker, Retiree, and Employer Recovery Act of 2008. These regulations would affect sponsors, administrators, participants, and beneficiaries of hybrid defined benefit pension plans. This document also provides a notice of a public hearing on these proposed regulations.

DATES: Written or electronic comments must be received by Wednesday, January 12, 2011. Outlines of topics to be discussed at the public hearing scheduled for Wednesday, January 26, 2011, at 10 a.m. must be received by Friday, January 14, 2011.

ADDRESSES: Send submissions to: CC:PA:LPD:PR (REG–132554–08), Room 5203, Internal Revenue Service, PO Box 7604, Ben Franklin Station, Washington, DC 20044. Submissions may be hand-delivered Monday through Friday between the hours of 8 a.m. and 4 p.m. to: CC:PA:LPD:PR (REG–132554–08), Courier's Desk, Internal Revenue Service, 1111 Constitution Avenue, NW., Washington, DC, or sent electronically, via the Federal eRulemaking Portal at *http://www.regulations.gov* (IRS REG–132554–08). The public hearing will be held in the IRS Auditorium, Internal Revenue Building, 1111 Constitution Avenue, NW., Washington, DC.

FOR FURTHER INFORMATION CONTACT: Concerning the regulations, Neil S. Sandhu, Lauson C. Green, or Linda S.F. Marshall at (202) 622–6090; concerning submissions of comments, the hearing, and/or being placed on the building access list to attend the hearing, Regina Johnson, at (202) 622–7180 (not toll-free numbers).

SUPPLEMENTARY INFORMATION:

Background

This document contains proposed amendments to the Income Tax Regulations (26 CFR part 1) under sections 411(a)(13), 411(b)(1), and 411(b)(5) of the Code. Generally, a defined benefit pension plan must satisfy the minimum vesting standards of section 411(a) and the accrual requirements of section 411(b) in order to be qualified under section 401(a) of the Code. Sections 411(a)(13) and 411(b)(5), which modify the minimum vesting standards of section 411(a) and the accrual requirements of section 411(b), were added to the Code by section 701(b) of the Pension Protection Act of 2006, Public Law 109–280 (120 Stat. 780 (2006)) (PPA '06). Sections 411(a)(13) and 411(b)(5), as well as certain effective date provisions related to these sections, were subsequently amended by the Worker, Retiree, and Employer Recovery Act of 2008, Public Law 110–458 (122 Stat. 5092 (2008)) (WRERA '08).

Section 411(a)(13)(A) provides that an applicable defined benefit plan (which is defined in section 411(a)(13)(C)) is not treated as failing to meet either (i) the requirements of section 411(a)(2) (subject to a special vesting rule in section 411(a)(13)(B) with respect to benefits derived from employer contributions) or (ii) the requirements of section 411(a)(11), 411(c), or 417(e), with respect to accrued benefits derived from employer contributions, merely because the present value of the accrued benefit (or any portion thereof) of any participant is, under the terms of the plan, equal to the amount expressed as the balance of a hypothetical account or as an accumulated percentage of the participant's final average compensation. Section 411(a)(13)(B) requires an applicable defined benefit plan to provide that an employee who has completed at least 3 years of service has a nonforfeitable right to 100 percent of the employee's accrued benefit derived from employer contributions.

Under section 411(a)(13)(C)(i), an applicable defined benefit plan is defined as a defined benefit plan under which the accrued benefit (or any portion thereof) of a participant is calculated as the balance of a hypothetical account maintained for the participant or as an accumulated percentage of the participant's final average compensation. Under section 411(a)(13)(C)(ii), the Secretary of the Treasury is to issue regulations which include in the definition of an applicable defined benefit plan any defined benefit plan (or portion of such a plan) which has an effect similar to a plan described in section 411(a)(13)(C)(i).

Section 411(a) requires that a defined benefit plan satisfy the requirements of section 411(b)(1). Section 411(b)(1) provides that a defined benefit plan must satisfy one of the three accrual rules of section 411(b)(1)(A), (B), and (C) with respect to benefits accruing under the plan. The three accrual rules are the 3 percent method of section 411(b)(1)(A), the 133⅓ percent rule of section 411(b)(1)(B), and the fractional rule of section 411(b)(1)(C).

Section 411(b)(1)(B) provides that a defined benefit plan satisfies the requirements of the 133⅓ percent rule for a particular plan year if, under the plan, the accrued benefit payable at the normal retirement age is equal to the normal retirement benefit, and the annual rate at which any individual who is or could be a participant can accrue the retirement benefits payable at normal retirement age under the plan

for any later plan year is not more than 133⅓ percent of the annual rate at which the individual can accrue benefits for any plan year beginning on or after such particular plan year and before such later plan year.

For purposes of applying the 133⅓ percent rule, section 411(b)(1)(B)(i) provides that any amendment to the plan which is in effect for the current year is treated as in effect for all other plan years. Section 411(b)(1)(B)(ii) provides that any change in an accrual rate which does not apply to any individual who is or could be a participant in the current plan year is disregarded. Section 411(b)(1)(B)(iii) provides that the fact that benefits under the plan may be payable to certain participants before normal retirement age is disregarded. Section 411(b)(1)(B)(iv) provides that social security benefits and all other relevant factors used to compute benefits are treated as remaining constant as of the current plan year for all years after the current year.

Section 411(b)(1)(H)(i) provides that a defined benefit plan fails to comply with section 411(b) if, under the plan, an employee's benefit accrual is ceased, or the rate of an employee's benefit accrual is reduced, because of the attainment of any age. Section 411(b)(5), which was added to the Code by section 701(b)(1) of PPA '06, provides additional rules related to section 411(b)(1)(H)(i). Section 411(b)(5)(A) generally provides that a plan is not treated as failing to meet the requirements of section 411(b)(1)(H)(i) if a participant's accrued benefit, as determined as of any date under the terms of the plan, would be equal to or greater than that of any similarly situated, younger individual who is or could be a participant. For this purpose, section 411(b)(5)(A)(iv) provides that the accrued benefit may, under the terms of the plan, be expressed as an annuity payable at normal retirement age, the balance of a hypothetical account, or the current value of the accumulated percentage of the employee's final average compensation. Section 411(b)(5)(G) provides that, for purposes of section 411(b)(5), any reference to the accrued benefit of a participant refers to the participant's benefit accrued to date.

Section 411(b)(5)(B) imposes certain requirements on an applicable defined benefit plan in order for the plan to satisfy section 411(b)(1)(H). Section 411(b)(5)(B)(i) provides that such a plan is treated as failing to meet the requirements of section 411(b)(1)(H) if the terms of the plan provide for an interest credit (or an equivalent amount) for any plan year at a rate that is greater than a market rate of return. Under section 411(b)(5)(B)(i)(I), a plan is not treated as having an above-market rate merely because the plan provides for a reasonable minimum guaranteed rate of return or for a rate of return that is equal to the greater of a fixed or variable rate of return. Section 411(b)(5)(B)(i)(II) provides that an applicable defined benefit plan is treated as failing to meet the requirements of section 411(b)(1)(H) unless the plan provides that an interest credit (or an equivalent amount) of less than zero can in no event result in the account balance or similar amount being less than the aggregate amount of contributions credited to the account. Section 411(b)(5)(B)(i)(III) authorizes the Secretary of the Treasury to provide by regulation for rules governing the calculation of a market rate of return for purposes of section 411(b)(5)(B)(i)(I) and for permissible methods of crediting interest to the account (including fixed or variable interest rates) resulting in effective rates of return meeting the requirements of section 411(b)(5)(B)(i)(I).

Sections 411(b)(5)(B)(ii), 411(b)(5)(B)(iii), and 411(b)(5)(B)(iv) contain additional requirements that apply if, after June 29, 2005, an applicable plan amendment is adopted. Section 411(b)(5)(B)(v)(I) defines an applicable plan amendment as an amendment to a defined benefit plan which has the effect of converting the plan to an applicable defined benefit plan. Under section 411(b)(5)(B)(ii), if, after June 29, 2005, an applicable plan amendment is adopted, the plan is treated as failing to meet the requirements of section 411(b)(1)(H) unless the requirements of section 411(b)(5)(B)(iii) are met with respect to each individual who was a participant in the plan immediately before the adoption of the amendment. Section 411(b)(5)(B)(iii) specifies that, subject to section 411(b)(5)(B)(iv), the requirements of section 411(b)(5)(B)(iii) are met with respect to any participant if the accrued benefit of the participant under the terms of the plan as in effect after the amendment is not less than the sum of: (I) the participant's accrued benefit for years of service before the effective date of the amendment, determined under the terms of the plan as in effect before the amendment; plus (II) the participant's accrued benefit for years of service after the effective date of the amendment, determined under the terms of the plan as in effect after the amendment. Section 411(b)(5)(B)(iv) provides that, for purposes of section 411(b)(5)(B)(iii)(I), the plan must credit the participant's account or similar amount with the amount of any early retirement benefit or retirement-type subsidy for the plan year in which the participant retires if, as of such time, the participant has met the age, years of service, and other requirements under the plan for entitlement to such benefit or subsidy.

Section 411(b)(5)(B)(v) sets forth certain provisions related to an applicable plan amendment. Section 411(b)(5)(B)(v)(II) provides that if the benefits under two or more defined benefit plans of an employer are coordinated in such a manner as to have the effect of adoption of an applicable plan amendment, the plan sponsor is treated as having adopted an applicable plan amendment as of the date the coordination begins. Section 411(b)(5)(B)(v)(III) directs the Secretary of the Treasury to issue regulations to prevent the avoidance of the purposes of section 411(b)(5)(B) through the use of two or more plan amendments rather than a single amendment.

Section 411(b)(5)(B)(vi) provides special rules for determining benefits upon termination of an applicable defined benefit plan. Under section 411(b)(5)(B)(vi)(I), an applicable defined benefit plan is not treated as satisfying the requirements of section 411(b)(5)(B)(i) (regarding permissible interest crediting rates) unless the plan provides that, upon plan termination, if the interest crediting rate under the plan is a variable rate, the rate of interest used to determine accrued benefits under the plan is equal to the average of the rates of interest used under the plan during the 5-year period ending on the termination date. In addition, under section 411(b)(5)(B)(vi)(II), the plan must provide that, upon plan termination, the interest rate and mortality table used to determine the amount of any benefit under the plan payable in the form of an annuity payable at normal retirement age is the rate and table specified under the plan for this purpose as of the termination date, except that if the interest rate is a variable rate, the rate used is the average of the rates used under the plan during the 5-year period ending on the termination date.

Section 411(b)(5)(C) provides that a plan is not treated as failing to meet the requirements of section 411(b)(1)(H)(i) solely because the plan provides offsets against benefits under the plan to the extent the offsets are otherwise allowable in applying the requirements of section 401(a). Section 411(b)(5)(D) provides that a plan is not treated as failing to meet the requirements of section 411(b)(1)(H) solely because the

plan provides a disparity in contributions or benefits with respect to which the requirements of section 401(l) (relating to permitted disparity for Social Security benefits and related matters) are met.

Section 411(b)(5)(E) provides that a plan is not treated as failing to meet the requirements of section 411(b)(1)(H) solely because the plan provides for indexing of accrued benefits under the plan. Under section 411(b)(5)(E)(iii), indexing means the periodic adjustment of the accrued benefit by means of the application of a recognized investment index or methodology. Section 411(b)(5)(E)(ii) requires that, except in the case of a variable annuity, the indexing not result in a smaller benefit than the accrued benefit determined without regard to the indexing.

Section 701(a) of PPA '06 added provisions to the Employee Retirement Income Security Act of 1974, Public Law 93–406 (88 Stat. 829 (1974)) (ERISA), that are parallel to sections 411(a)(13) and 411(b)(5) of the Code. The guidance provided in these regulations with respect to sections 411(a)(13) and 411(b)(5) of the Code would also apply for purposes of the parallel amendments to ERISA made by section 701(a) of PPA '06, and the guidance provided in these regulations with respect to section 411(b)(1) of the Code would also apply for purposes of section 204(b)(1) of ERISA.[1]

Section 701(c) of PPA '06 added provisions to the Age Discrimination in Employment Act of 1967, Public Law 90–202 (81 Stat. 602 (1967)), that are parallel to section 411(b)(5) of the Code. Executive Order 12067 requires all Federal departments and agencies to advise and offer to consult with the Equal Employment Opportunity Commission (EEOC) during the development of any proposed rules, regulations, policies, procedures, or orders concerning equal employment opportunity. The Treasury Department and the IRS have consulted with the EEOC prior to the issuance of these regulations.

Section 701(d) of PPA '06 provides that nothing in the amendments made by section 701 should be construed to create an inference concerning the treatment of applicable defined benefit plans or conversions of plans into applicable defined benefit plans under section 411(b)(1)(H), or concerning the determination of whether an applicable defined benefit plan fails to meet the requirements of section 411(a)(2), 411(c), or 417(e), as in effect before such amendments, solely because the present value of the accrued benefit (or any portion thereof) of any participant is, under the terms of the plan, equal to the amount expressed as the balance of a hypothetical account or as an accumulated percentage of the participant's final average compensation.

Section 701(e) of PPA '06 sets forth the effective date provisions with respect to amendments made by section 701 of PPA '06. Section 701(e)(1) specifies that the amendments made by section 701 generally apply to periods beginning on or after June 29, 2005. Thus, the age discrimination safe harbors under section 411(b)(5)(A) and section 411(b)(5)(E) are effective for periods beginning on or after June 29, 2005. Section 701(e)(2) provides that the special present value rules of section 411(a)(13)(A) are effective for distributions made after August 17, 2006 (the date PPA '06 was enacted).

Under section 701(e) of PPA '06, the 3-year vesting rule under section 411(a)(13)(B) is generally effective for years beginning after December 31, 2007, for a plan in existence on June 29, 2005, while, pursuant to the amendments made by section 107(c) of WRERA '08, the rule is generally effective for plan years ending on or after June 29, 2005, for a plan not in existence on June 29, 2005. The market rate of return limitation under section 411(b)(5)(B)(i) is generally effective for years beginning after December 31, 2007, for a plan in existence on June 29, 2005, while the limitation is generally effective for periods beginning on or after June 29, 2005, for a plan not in existence on June 29, 2005. Section 701(e)(4) of PPA '06 contains special effective date provisions for collectively bargained plans that modify these effective dates.

Under section 701(e)(5) of PPA '06, as amended by WRERA '08, sections 411(b)(5)(B)(ii), (iii), and (iv) apply to a conversion amendment that is adopted on or after, and takes effect on or after, June 29, 2005.

Under section 701(e)(6) of PPA '06, as added by WRERA '08, the 3-year vesting rule under section 411(a)(13)(B) does not apply to a participant who does not have an hour of service after the date the 3-year vesting rule would otherwise be effective.

Section 702 of PPA '06 provides for regulations to be prescribed by August 16, 2007, addressing the application of rules set forth in section 701 of PPA '06 where the conversion of a defined benefit pension plan into an applicable defined benefit plan is made with respect to a group of employees who become employees by reason of a merger, acquisition, or similar transaction.

Under section 1107 of PPA '06, a plan sponsor is permitted to delay adopting a plan amendment pursuant to statutory provisions under PPA '06 (or pursuant to any regulation issued under PPA '06) until the last day of the first plan year beginning on or after January 1, 2009 (January 1, 2011, in the case of governmental plans). As described in Rev. Proc. 2007–44 (2007–28 IRB 54), this amendment deadline applies to both interim and discretionary amendments that are made pursuant to PPA '06 statutory provisions or any regulation issued under PPA '06. See § 601.601(d)(2)(ii)(*b*).

Section 1107 of PPA '06 also permits certain amendments to reduce or eliminate section 411(d)(6) protected benefits. Except to the extent permitted under section 1107 of PPA '06 (or under another statutory provision, including section 411(d)(6) and §§ 1.411(d)–3 and 1.411(d)–4), section 411(d)(6) prohibits a plan amendment that decreases a participant's accrued benefits or that has the effect of eliminating or reducing an early retirement benefit or retirement-type subsidy, or eliminating an optional form of benefit, with respect to benefits attributable to service before the amendment. However, an amendment that eliminates or decreases benefits that have not yet accrued does not violate section 411(d)(6), provided that the amendment is adopted and effective before the benefits accrue. If section 1107 of PPA '06 applies to an amendment of a plan, section 1107 provides that the plan does not fail to meet the requirements of section 411(d)(6) by reason of such amendment, except as provided by the Secretary of the Treasury.

Section 1.411(b)–1(a)(1) of the Treasury Regulations provides that a defined benefit plan is not a qualified plan unless the method provided by the plan for determining accrued benefits satisfies at least one of the alternative methods in § 1.411(b)–1(b) for determining accrued benefits with respect to all active participants under the plan. Section 1.411(b)–1(b)(2)(i) provides that a defined benefit plan satisfies the 133⅓ percent rule of section 411(b)(1)(B) for a particular plan year if (A) under the plan the accrued benefit payable at the normal retirement age (determined under the plan) is equal to the normal retirement benefit (determined under the plan), and (B) the annual rate at which any individual who is or could be a participant can

[1] Under section 101 of Reorganization Plan No. 4 of 1978 (43 FR 47713), the Secretary of the Treasury has interpretive jurisdiction over the subject matter addressed by these regulations for purposes of ERISA, as well as the Code.

accrue the retirement benefits payable at normal retirement age under the plan for any later plan year cannot be more than 133⅓ percent of the annual rate at which the participant can accrue benefits for any plan year beginning on or after such particular plan year and before such later plan year. Section 1.411(b)–1(b)(2)(ii)(A) through (D) sets forth a series of rules that correspond to the rules of section 411(b)(1)(B)(i) through (iv). Section 1.411(b)–1(b)(2)(ii)(D) provides that, for purposes of the 133⅓ percent rule, for any plan year, social security benefits and all relevant factors used to compute benefits, *e.g.,* consumer price index, are treated as remaining constant as of the beginning of the current plan year for all subsequent plan years.

Proposed regulations (EE–184–86) under sections 411(b)(1)(H) and 411(b)(2) were published by the Treasury Department and the IRS in the **Federal Register** on April 11, 1988 (53 FR 11876), as part of a package of regulations that also included proposed regulations under sections 410(a), 411(a)(2), 411(a)(8), and 411(c) (relating to the maximum age for participation, vesting, normal retirement age, and actuarial adjustments after normal retirement age, respectively).[2]

Notice 96–8 (1996–1 CB 359), see § 601.601(d)(2)(ii)(*b*), described the application of sections 411 and 417(e)(3) to a single-sum distribution under a cash balance plan where interest credits under the plan are frontloaded (that is, where future interest credits to an employee's hypothetical account balance are not conditioned upon future service and thus accrue at the same time that the benefits attributable to a hypothetical allocation to the account accrue). Under the analysis set forth in Notice 96–8, in order to comply with sections 411(a) and 417(e)(3) in calculating the amount of a single-sum distribution under a cash balance plan, the balance of an employee's hypothetical account must be projected to normal retirement age and converted to an annuity under the terms of the plan, and then the employee must be paid at least the present value of the projected annuity, determined in accordance with section 417(e). Under that analysis, where a cash balance plan provides frontloaded interest credits using an interest rate that is higher than the section 417(e) applicable interest rate, payment of a single-sum distribution equal to the current hypothetical account balance as a complete distribution of the employee's accrued benefit may result in a violation of the minimum present value requirements of section 417(e) or a forfeiture in violation of section 411(a). In addition, Notice 96–8 proposed a safe harbor which provided that, if frontloaded interest credits are provided under a plan at a rate no greater than the sum of identified standard indices and associated margins, no violation of section 411(a) or 417(e) would result if the employee's entire accrued benefit were to be distributed in the form of a single-sum distribution equal to the employee's hypothetical account balance, provided the plan uses appropriate annuity conversion factors. Since the issuance of Notice 96–8, four Federal appellate courts have followed the analysis set out in the Notice: *Esden* v. *Bank of Boston,* 229 F.3d 154 (2d Cir. 2000), *cert. dismissed,* 531 U.S. 1061 (2001); *West* v. *AK Steel Corp. Ret. Accumulation Pension Plan,* 484 F.3d 395 (6th Cir. 2007), *cert. denied,* 129 S. Ct. 895 (2009); *Berger* v. *Xerox Corp. Ret. Income Guarantee Plan,* 338 F.3d 755 (7th Cir. 2003), *reh'g and reh'g en banc denied,* No. 02–3674, 2003 U.S. App. LEXIS 19374 (7th Cir. Sept. 15, 2003); *Lyons* v. *Georgia-Pacific Salaried Employees Ret. Plan,* 221 F.3d 1235 (11th Cir. 2000), *cert. denied,* 532 U.S. 967 (2001).

Notice 2007–6 (2007–1 CB 272), see § 601.601(d)(2)(ii)(*b*), provides transitional guidance with respect to certain requirements of sections 411(a)(13) and 411(b)(5) and section 701(b) of PPA '06. Notice 2007–6 includes certain special definitions, including: accumulated benefit, which is defined as a participant's benefit accrued to date under a plan; lump sum-based plan, which is defined as a defined benefit plan under the terms of which the accumulated benefit of a participant is expressed as the balance of a hypothetical account maintained for the participant or as the current value of the accumulated percentage of the participant's final average compensation; and statutory hybrid plan, which is defined as a lump sum-based plan or a plan which has an effect similar to a lump sum-based plan. Notice 2007–6 provides guidance on a number of issues, including a rule under which a plan that provides for indexed benefits described in section 411(b)(5)(E) is a statutory hybrid plan (because it has an effect similar to a lump sum-based plan), unless the plan either solely provides for post-retirement adjustment of the amounts payable to a participant or is a variable annuity plan under which the assumed interest rate used to determine adjustments is at least 5 percent. Notice 2007–6 provides a safe harbor for applying the rules set forth in section 701 of PPA '06 where the conversion of a defined benefit pension plan into an applicable defined benefit plan is made with respect to a group of employees who become employees by reason of a merger, acquisition, or similar transaction. This transitional guidance, along with the other guidance provided in Part III of Notice 2007–6, applies pending the issuance of further guidance and, thus, does not apply for periods to which the 2010 final regulations (as described later in this preamble) apply.

Proposed regulations (REG–104946–07) under sections 411(a)(13) and 411(b)(5) (2007 proposed regulations) were published by the Treasury Department and the IRS in the **Federal Register** on December 28, 2007 (72 FR 73680). The Treasury Department and the IRS received written comments on the 2007 proposed regulations and a public hearing was held on June 6, 2008.

Proposed regulations (REG–100464–08) under section 411(b)(1)(B) (2008 proposed backloading regulations) were published by the Treasury Department and the IRS in the **Federal Register** on June 18, 2008 (73 FR 34665). The 2008 proposed backloading regulations would provide guidance on the application of the accrual rule for defined benefit plans under section 411(b)(1)(B) in cases where plan benefits are determined on the basis of the greatest of two or more separate formulas. The Treasury Department and the IRS received written comments on the 2008 proposed backloading regulations and a public hearing was held on October 15, 2008.

Announcement 2009–82 (2009–48 IRB 720) and Notice 2009–97 (2009–52 IRB 972) announced certain expected relief with respect to the requirements of section 411(b)(5). In particular, Announcement 2009–82 stated that the rules in the regulations specifying permissible market rates of return are not expected to go into effect before the first plan year that begins on or after January 1, 2011. In addition, Notice

[2] On December 11, 2002, the Treasury Department and the IRS issued proposed regulations regarding the age discrimination requirements of section 411(b)(1)(H) that specifically addressed cash balance plans as part of a package of regulations that also addressed section 401(a)(4) nondiscrimination cross-testing rules applicable to cash balance plans (67 FR 76123). The 2002 proposed regulations were intended to replace the 1988 proposed regulations. In Ann. 2003–22 (2003–1 CB 847), see § 601.601(d)(2)(ii)(*b*), the Treasury Department and the IRS announced the withdrawal of the 2002 proposed regulations under section 401(a)(4), and in Ann. 2004–57 (2004–2 CB 15), see § 601.601(d)(2)(ii)(*b*), the Treasury Department and the IRS announced the withdrawal of the 2002 proposed regulations relating to age discrimination.

2009–97 stated that, once final regulations under sections 411(a)(13) and 411(b)(5) are issued, it is expected that relief from the requirements of section 411(d)(6) will be granted for a plan amendment that eliminates or reduces a section 411(d)(6) protected benefit, provided that the amendment is adopted by the last day of the first plan year that begins on or after January 1, 2010, and the elimination or reduction is made only to the extent necessary to enable the plan to meet the requirements of section 411(b)(5).[3] Notice 2009–97 also extended the deadline for amending cash balance and other applicable defined benefit plans, within the meaning of section 411(a)(13)(C), to meet the requirements of section 411(a)(13) (other than section 411(a)(13)(A)) and section 411(b)(5), relating to vesting and other special rules applicable to these plans. Under Notice 2009–97, the deadline for these amendments is the last day of the first plan year that begins on or after January 1, 2010.

Final regulations (2010 final regulations) under sections 411(a)(13) and 411(b)(5) are being issued at the same time as these proposed regulations. The 2010 final regulations adopt most of the provisions of the 2007 proposed regulations, with certain modifications, and also reserve a number of sections relating to issues that are not addressed in those final regulations. These reserved issues relate to the scope of relief provided under section 411(a)(13)(A), a potential alternative method of satisfying the conversion protection requirements, additional rules with respect to the market rate of return requirement, and the application of the special plan termination rules. These proposed regulations generally address these issues, as well as an issue under section 411(b)(1).

Explanation of Provisions

Overview

In general, these proposed regulations would provide guidance with respect to certain issues under sections 411(a)(13) and 411(b)(5) that are not addressed in the 2010 final regulations, as well as an issue under section 411(b)(1) for hybrid defined benefit plans that adjust benefits using a variable rate.

[3] However, see footnote 6 in Section IV.C of this preamble.

I. Section 411(a)(13): Scope of Relief of Section 411(a)(13)(A)

A. The 2010 Final Regulations

The 2010 final regulations define a lump sum-based benefit formula as a benefit formula used to determine all or any part of a participant's accumulated benefit under which the accumulated benefit provided under the formula is expressed as the current balance of a hypothetical account maintained for the participant or as the current value of an accumulated percentage of the participant's final average compensation. The 2010 final regulations provide that the relief of section 411(a)(13)(A) applies to the benefits determined under a lump sum-based benefit formula.

B. Limitations on the Relief of Section 411(a)(13)(A)

The proposed regulations would provide that the relief of section 411(a)(13)(A) does not apply with respect to the benefits determined under a lump sum-based benefit formula unless certain requirements are satisfied. In particular, the proposed regulations would provide that the relief does not apply unless, at all times on or before normal retirement age, the then-current hypothetical account balance or the then-current accumulated percentage of the participant's final average compensation is not less than the present value, determined using reasonable actuarial assumptions, of the portion of the participant's accrued benefit that is determined under the lump sum-based benefit formula. However, the plan would be deemed to satisfy this requirement for periods before normal retirement age if, upon attainment of normal retirement age, the then-current balance of the hypothetical account or the then-current value of the accumulated percentage of the participant's final average compensation is actuarially equivalent (using reasonable actuarial assumptions) to the portion of the participant's accrued benefit that is determined under the lump sum-based benefit formula. Thus, for periods before normal retirement age, a statutory hybrid plan with a lump sum-based benefit formula that meets the requirements of the preceding sentence need not project interest credits to normal retirement age and discount the resulting accrued benefit back in order to apply the relief of section 411(a)(13)(A) with respect to the benefit determined under the lump sum-based benefit formula.

In addition, the proposed regulations would provide that the relief of section 411(a)(13)(A) does not apply unless, as of each annuity starting date after normal retirement age, the then-current balance of the hypothetical account or the then-current value of the accumulated percentage of the participant's final average compensation satisfies the requirements of section 411(a)(2) or would satisfy those requirements but for the fact that the plan suspends benefits in accordance with section 411(a)(3)(B). Thus, for example, a plan that expresses the accumulated benefit as the balance of a hypothetical account and that does not comply with the suspension of benefit rules may have difficulty obtaining the relief of section 411(a)(13)(A) if, after normal retirement age, the plan credits interest at such a low rate that the adjustments provided by the interest credits, together with any principal credits, are insufficient to provide any required actuarial increases.

The proposed regulations would also provide that the relief of section 411(a)(13)(A) does not apply unless the balance of the hypothetical account or the accumulated percentage of the participant's final average compensation may not be reduced except as a result of one of the specified reasons set forth in the regulations. Under the proposed regulations, reductions would only be permissible as a result of: (1) Benefit payments, (2) qualified domestic relations orders under section 414(p), (3) forfeitures that are permitted under section 411(a) (such as charges for providing a qualified preretirement survivor annuity), (4) amendments that are permitted under section 411(d)(6), and (5) adjustments resulting from the application of interest credits (under the rules of § 1.411(b)(5)–1) that are negative for a period, for plans that express the accumulated benefit as the balance of a hypothetical account.

C. Application of Section 411(A)(13)(A) to Distributions Other Than Single Sums

The proposed regulations would provide that the relief under section 411(a)(13)(A) (with respect to the requirements of sections 411(a)(2), 411(c), and 417(e)) extends to certain other forms of benefit under a lump sum-based benefit formula, in addition to a single-sum payment of the entire benefit. In particular, the proposed regulations would clarify that the relief provided under section 411(a)(13)(A) extends to an optional form of benefit that is currently payable with respect to a lump sum-based benefit formula if, under the terms of the plan, the optional form of benefit is determined as of the annuity starting date as the actuarial equivalent, determined using reasonable actuarial assumptions, of the then-

current balance of the hypothetical account or the then-current value of an accumulated percentage of the participant's final average compensation.

In addition, the proposed regulations would create a special rule that provides that the relief under section 411(a)(13)(A) also extends to an optional form of benefit that is not subject to the minimum present value requirements of section 417(e) and that is currently payable with respect to a lump sum-based benefit formula if, under the terms of the plan, this optional form of benefit is determined as of the annuity starting date as the actuarial equivalent (using reasonable actuarial assumptions) of the optional form of benefit that: (1) Commences as of the same annuity starting date; (2) is payable in the same generalized optional form (within the meaning of § 1.411(d)-3(g)(8)) as the accrued benefit; and (3) is the actuarial equivalent (using reasonable actuarial assumptions) of the then-current balance of the hypothetical account maintained for the participant or the then-current value of an accumulated percentage of the participant's final average compensation. This special rule would facilitate the payment of an immediate annuity, such as a joint and survivor annuity or life annuity with period certain, that is calculated as the actuarial equivalent of the form of payment of the accrued benefit under the plan, such as an immediately payable straight life annuity.

Finally, the proposed regulations would provide that the relief under section 411(a)(13)(A) applies on a proportionate basis to a payment of a portion of the benefit under a lump sum-based benefit formula that is not paid in the form of an annuity, such as a payment of a specified dollar amount or percentage of the then-current balance of a hypothetical account maintained for the participant or then-current value of an accumulated percentage of the participant's final average compensation. Thus, for example, if a plan that expresses the participant's entire accumulated benefit as the balance of a hypothetical account distributes 40 percent of the participant's then-current hypothetical account balance, the plan is treated as satisfying the requirements of section 411(a) and the minimum present value rules of section 417(e) with respect to 40 percent of the participant's then-current accrued benefit.

D. Application of Section 411(A)(13)(A) to Plans With Multiple Formulas

The proposed regulations would clarify that the relief provided under section 411(a)(13)(A) does not apply to any portion of the participant's benefit that is determined under a formula that is not a lump sum-based benefit formula. Thus, for example, where the participant's accrued benefit equals the greater of the benefit under a hypothetical account formula and the benefit under a traditional defined benefit formula, a single-sum payment of the participant's entire benefit must equal the greater of the then-current balance of the hypothetical account and the present value, determined in accordance with section 417(e), of the benefit under the traditional defined benefit formula. On the other hand, where the plan provides an accrued benefit equal to the sum of the benefit under a hypothetical account formula plus the excess of the benefit under a traditional defined benefit formula over the benefit under the hypothetical account formula, a single-sum payment of the participant's entire benefit must equal the then-current balance of the hypothetical account plus the excess of the present value, determined in accordance with section 417(e), of the benefit under the traditional defined benefit formula over the present value, determined in accordance with section 417(e), of the benefit under the hypothetical account formula. See the request for comments under the heading "Comments and Public Hearing" on the issue of determining the present value of a benefit determined, in part, based on the benefit under a lump sum-based benefit formula.

E. Application of Section 411(A)(13)(A) to Pension Equity Plans

The preamble to the 2007 proposed regulations asked for comments on plan formulas that calculate benefits as the current value of an accumulated percentage of the participant's final average compensation (often referred to as "pension equity plans" or "PEPs"). Commenters indicated that some of these plans never credit interest, directly or indirectly, some explicitly credit interest after cessation of PEP accruals, and some do not credit interest explicitly but provide for specific amounts to be payable after cessation of PEP accruals (both immediately and at future dates) based on actuarial equivalence using specified actuarial factors applied upon cessation of PEP accruals.

The 2010 final regulations clarify that a formula is expressed as the balance of a hypothetical account maintained for the participant if it is expressed as a current single-sum dollar amount. Thus, a PEP formula that credits interest after cessation of PEP accruals is considered a formula that is expressed as the balance of a hypothetical account after cessation of PEP accruals. As a result, such a formula is a lump sum-based benefit formula that is subject to the rules of section 411(a)(13)(A) set forth earlier in this preamble, as those rules are applied to PEP formulas during the period of PEP accruals and as those rules are applied to hypothetical account balance formulas after cessation of PEP accruals.

Under these proposed regulations, any other PEP formula (including those that do not credit interest, directly or indirectly, and those that offer actuarially equivalent forms of payment using specified actuarial factors applied after cessation of PEP accruals) would also be subject to the rules of section 411(a)(13)(A), as explained earlier in this preamble. Thus, for example, a PEP that does not explicitly credit interest but, instead, calculates the annuity benefit commencing at future ages as the actuarial equivalent of the PEP value as of cessation of PEP accruals would be eligible for the relief of section 411(a)(13)(A) with respect to the PEP value as of every period before cessation of PEP accruals. In addition, since the accrued benefit is calculated as an annuity commencing at normal retirement age that is actuarially equivalent to the PEP value as of cessation of PEP accruals, the relief described above that applies to annuities that are calculated as the actuarial equivalent of the then-current PEP value would not apply.

II. Section 411(b)(1): Special Rule With Respect to Statutory Hybrid Plans

Under the regulations with respect to the 133⅓ percent rule of section 411(b)(1)(B), for any plan year, social security benefits and all relevant factors used to compute benefits, *e.g.,* consumer price index, are treated as remaining constant as of the beginning of the current plan year for all subsequent plan years. A number of commenters on both the 2007 proposed regulations and the 2008 proposed backloading regulations expressed concern that this rule might effectively preclude statutory hybrid plans from using an interest crediting rate that is a variable rate that could potentially be negative in a year, such as an equity-based rate. This is because, if a plan treated an interest crediting rate that was negative as remaining constant in all future years for purposes of the backloading test of section 411(b)(1)(B), a principal credit (such as a pay credit) that accrues in a later year would result in a greater benefit accrual than an otherwise identical principal credit that accrues in an earlier year

because the principal credit that accrues later is credited with negative interest credits for fewer years. Thus, these commenters were concerned that a plan that uses a variable rate could fail the backloading rules of section 411(b)(1) even where both the pay crediting and interest crediting formulas do not vary over time.

In response to these comments, the proposed regulations contain a special rule regarding the application of the 133⅓; percent rule of section 411(b)(1)(B) to a statutory hybrid plan that adjusts benefits using a variable interest crediting rate that can potentially be negative in any given year. Under this proposed rule, a plan that determines any portion of the participant's accrued benefit pursuant to a statutory hybrid benefit formula (as defined in § 1.411(a)(13)–1(d)(4)) that utilizes an interest crediting rate described in § 1.411(b)(5)–1(d) that is a variable rate that was less than zero for the prior plan year would not be treated as failing to satisfy the requirements of the 133⅓ percent rule for the current plan year merely because the section 411(b)(1)(B) backloading calculation is performed assuming that the variable rate is zero for the current plan year and all future plan years.

III. Section 411(b)(5): Special Conversion Protection Rule and Additional Rules With Respect to the Market Rate of Return Limitation

A. Comparison at Effective Date of Conversion Amendment

In accordance with the requirements of section 411(b)(5)(B)(ii), the 2010 final regulations provide that a participant whose benefits are affected by a conversion amendment generally must be provided with a benefit after the conversion that is at least equal to the sum of benefits accrued through the date of conversion and benefits earned after the conversion, with no permitted interaction between the two portions. The 2010 final regulations provide for an alternative method of satisfying the conversion protection requirements where an opening hypothetical account balance or opening accumulated percentage of the participant's final average compensation is established at the time of the conversion and the plan provides for separate calculation of (1) the benefit attributable to the opening hypothetical account balance (including interest credits attributable thereto) or attributable to the opening accumulated percentage of the participant's final average compensation and (2) the benefit attributable to post-conversion service under the post-conversion benefit formula. Under this alternative, the plan must provide that, when a participant commences benefits, the participant's benefit will be increased if the benefit attributable to the opening hypothetical account or opening accumulated percentage that is payable in the particular optional form of benefit selected is less than the benefit accrued under the plan prior to the date of conversion and that was payable in the same generalized optional form of benefit (within the meaning of § 1.411(d)–3(g)(8)) at the same annuity starting date.

The preamble to the 2007 proposed regulations requested comments on another alternative method of satisfying the conversion protection requirements that would not require this comparison at the annuity starting date. In response to favorable comments related to this alternative, these proposed regulations would provide that certain plans may satisfy the conversion protection requirements of sections 411(b)(5)(B)(ii), 411(b)(5)(B)(iii), and 411(b)(5)(B)(iv) by establishing an opening hypothetical account balance without a subsequent comparison of benefits at the annuity starting date. While testing at the annuity starting date would not be required under this method, a number of requirements like those described in the preamble to the 2007 proposed regulations would need to be satisfied in order to ensure that the hypothetical account balance used to replicate the pre-conversion benefit (the opening hypothetical account balance and interest credits on that account balance) is reasonably expected in most, but not necessarily all, cases to provide a benefit at least as large as the pre-conversion benefit for all periods after the conversion amendment.

This alternative method would be limited to situations where an opening hypothetical account balance is established and would not be available where an opening accumulated percentage of the participant's final average compensation is established because these plans would be unable to reliably replicate the pre-conversion benefit. This is because the value of the opening accumulated percentage would only increase as a result of unpredictable increases in compensation for periods after the conversion amendment until cessation of PEP accruals, rather than by application of an annual interest crediting rate.

This alternative would only be available where the participant elects to receive payment in the form of a single-sum distribution equal to the sum of the then-current balance of the hypothetical account used to replicate the pre-conversion benefit and the benefit attributable to post-conversion service under the post-conversion benefit formula. Because of the limited availability of this alternative, plans will still need to separately keep track of the pre-conversion benefit in order to satisfy the conversion protection requirements for all forms of distribution other than a single-sum distribution. See the related request for comments in this preamble under the heading "Comments and Public Hearing."

Under this alternative, in order to satisfy the requirements of section 411(d)(6), the participant's benefit after the effective date of the conversion amendment must not be less than the participant's section 411(d)(6) protected benefit (as defined in § 1.411(d)–3(g)(14)) with respect to service before the effective date of the conversion amendment (determined under the terms of the plan as in effect immediately before the effective date of the amendment). Also, the plan, as in effect immediately before the effective date of the conversion amendment, either must not have provided a single-sum payment option (for benefits that cannot be immediately distributed under section 411(a)(11)) or must have provided a single-sum payment option that was based solely on the present value of the benefit payable at normal retirement age (or at date of benefit commencement, if later) and which was not based on the present value of the benefit payable commencing at any date prior to normal retirement age. This condition ensures that the hypothetical account balance used to replicate the pre-conversion benefit does not result in a single-sum distribution that is less than would have been available under an early retirement subsidy under the pre-conversion formula.

Under this alternative method of satisfying the conversion protection requirements, the opening hypothetical account balance must be established in accordance with the rules under which this opening balance is not less than the present value, determined in accordance with section 417(e), of the accrued benefit immediately prior to the effective date of the conversion amendment. In addition, under this alternative, the interest crediting rate under the plan as of the effective date of the conversion amendment must be either the rate of interest on long-term investment grade corporate bonds (the third segment rate) or one of several specified safe harbor rates. Also, as of that date, the value of the index used to determine the interest crediting rate under the plan must be at least as great

for every participant or beneficiary as the interest rate that was used to determine the opening hypothetical account balance. This requirement is satisfied, for example, if each participant's opening hypothetical account balance is determined using the applicable interest rate and applicable mortality table under section 417(e)(3), the interest crediting rate under the plan is the third segment rate, and, at the effective date of the conversion amendment, the third segment rate is the highest of the three segment rates. If, subsequent to the effective date of the conversion amendment, the interest crediting rate changes (whether by plan amendment or otherwise) with respect to a participant who was a participant at the time of the effective date of the conversion amendment from an interest crediting rate that is either the rate of interest on long-term investment grade corporate bonds or one of the specified safe harbor rates to a different interest crediting rate that is not in all cases at least as great as the prior interest crediting rate under the plan, then the new interest crediting rate does not apply to the existing hypothetical account balance as of the effective date of the change in interest crediting rates (or, if the plan created a subaccount consisting of the opening hypothetical account balance and interest credits on that subaccount, then the new interest crediting rate does not apply to the subaccount).

Finally, either the plan must provide a death benefit after the effective date of the conversion amendment which has a present value that is at all times at least equal to the then-current balance of the hypothetical account used to replicate the pre-conversion benefit or the plan must not have applied a pre-retirement mortality decrement in establishing the opening hypothetical account balance.

B. Market Rate of Return

The 2010 final regulations provide that a plan that credits interest must specify how the plan determines interest credits and must specify how and when interest credits are credited. In addition, the 2010 final regulations contain certain specific rules regarding the method and timing of interest credits, including a requirement that interest be credited at least annually.

The proposed regulations include a rule that would provide that a plan is not treated as failing to meet the interest crediting requirements merely because the plan does not provide for interest credits on amounts distributed prior to the end of the interest crediting period. Thus, if a plan credits interest at periodic intervals, the plan would not be required to credit interest on amounts that were distributed between the dates on which interest under the plan is credited to the account balance.

Furthermore, the proposed regulations include a rule that would allow plans to credit interest taking into account increases or decreases to the participant's accumulated benefit that occur during the period. In particular, the rule would provide that a plan is not treated as failing to meet the market rate of return limitations merely because the plan calculates increases or decreases to the participant's accumulated benefit by applying a rate of interest or rate of return (including a rate of increase or decrease under an index) to the participant's adjusted accumulated benefit (or portion thereof) for the period. For this purpose, the participant's adjusted accumulated benefit equals the participant's accumulated benefit as of the beginning of the period, adjusted for debits and credits (other than interest credits) made to the accumulated benefit prior to the end of the interest crediting period, with appropriate weighting for those debits and credits based on their timing within the period. For plans that calculate increases or decreases to the participant's accumulated benefit by applying a rate of interest or rate of return to the participant's adjusted accumulated benefit (or portion thereof) for the period, interest credits include these increases and decreases, to the extent provided under the terms of the plan at the beginning of the period and to the extent not conditioned on current service and not made on account of imputed service, and the interest crediting rate with respect to a participant equals the total amount of interest credits for the period divided by the participant's adjusted accumulated benefit for the period.

The proposed regulations would provide that the preservation of capital requirement is applied only at an annuity starting date on which a distribution of the participant's entire benefit as of that date under the plan's statutory hybrid benefit formula commences. The proposed regulations would also provide special rules to ensure that prior distributions are taken into account in determining the guarantee provided by the preservation of capital requirement with respect to a current distribution to which the rule applies.

These proposed regulations would broaden the list of permitted interest crediting rates from those permitted under the 2010 final regulations. A number of commenters on the 2007 proposed regulations requested that the rate of return on plan assets be treated as a market rate of return for all types of statutory hybrid plans, and not just indexed plans. In response to these comments, the proposed regulations would permit the use of the rate of return on plan assets as a market rate of return for statutory hybrid plans generally if the plan's assets are diversified so as to minimize the volatility of returns. Like the 2010 final regulations, the proposed regulations would provide that this requirement that plan assets be diversified so as to minimize the volatility of returns does not require greater diversification than is required under section 404(a)(1)(C) of Title I of the Employee Retirement Income Security Act of 1974, Public Law 93–406 (88 Stat. 829 (1974)) with respect to defined benefit pension plans.

The preamble to the 2007 proposed regulations asked for comments about the possibility of allowing an interest credit to be determined by reference to a rate of return on a regulated investment company (RIC) described in section 851. The preamble focused on whether such an investment has sufficiently constrained volatility that the existence of the capital preservation rule would not result in an above market rate of return. In response to comments received on the 2007 proposed regulations, these proposed regulations would provide that an interest crediting rate is not in excess of a market rate of return if it is equal to the rate of return on a RIC, as defined in section 851, that is reasonably expected to be not significantly more volatile than the broad United States equities market or a similarly broad international equities market. For example, a RIC that has most of its assets invested in securities of issuers (including other RICs) concentrated in an industry sector or a country other than the United States, that uses leverage, or that has significant investment in derivative financial products, for the purpose of achieving returns that amplify the returns of an unleveraged investment, generally would not meet this requirement. Thus, a RIC that has most of its investments concentrated in the semiconductor industry or that uses leverage in order to provide a rate of return that is twice the rate of return on the Standard & Poor's 500 index (S&P 500) would not meet this requirement. On the other hand, a RIC whose investments track the rate of return on the S&P 500, a broad-based "small-cap" index (such as the Russell 2000 index), or a broad-based international equities index would meet this requirement. The requirement that

the RIC's investments not be concentrated in an industry sector or a specific international country is intended to limit the volatility of the returns, as well as the risk inherent in non-diversified investments. Similarly, the requirement that the RIC not provide leveraged returns is intended both to ensure that rates provided by the RIC do not exceed an unleveraged market rate as well as to limit the volatility of the returns provided. Subject to these requirements, the proposed rule is intended to provide plan sponsors with greater flexibility in choosing an equity-based rate than would be provided if the regulations were to list particular equity-based rates that satisfy the market rate of return requirement.

The preamble to the 2007 proposed regulations requested comments as to how to implement a rule that provides that interest credits are determined under the greater of two or more interest crediting rates without violating the market rate of return limitation. In response to such comments, these proposed regulations would provide that in certain limited circumstances a plan can provide interest credits based on the greater of two or more interest crediting rates without exceeding a market rate of return.

The Treasury Department and the IRS have modeled the historical distribution of rates of interest on long-term investment grade corporate bonds and have determined that those rates have only infrequently been lower than 4 percent and, when lower, were generally lower by small amounts and for limited durations. Therefore, the increase in the effective rate of return resulting from adding an annual 4 percent floor to one of these bond rates has historically been small enough that the effective rate of return is not in excess of a market rate of return. As a result, the proposed rules would provide that it is permissible for a plan to utilize an annual floor of 4 percent in conjunction with a permissible bond rate. Specifically, the proposed regulations would provide that a plan does not provide an interest crediting rate that is in excess of a market rate of return merely because the plan provides that the interest crediting rate for an interest crediting period equals the greater of the rate of interest on long-term investment grade corporate bonds (or one of the safe harbor rates that, under the regulations, are deemed not to be in excess of that rate) and an annual interest rate of 4 percent.

This rule permitting a plan to utilize an annual floor of 4 percent in conjunction with a permissible bond-based rate would also permit plans that credit interest more frequently than annually using a permissible bond-based rate to also utilize a periodic floor that is a pro rata portion of an annual 4 percent floor. Thus, plans that credit interest more frequently than annually could provide an effective annual floor that is greater than 4 percent, both due to the effect of compounding because the floor would be applied more frequently than annually and because the floor would be applied in any period that the bond-based rate was below the floor, even if the annual rate exceeded 4 percent for the plan year. However, given the nature of bond-based rates, including the serial correlation of rates from one period to the next, as well as the fact that 4 percent is not expected to exceed a permissible bond-based rate except infrequently, by small amounts, and for limited durations, in most instances a periodic floor that is based on a 4 percent annual floor will not provide a floor that is significantly different than an annual floor of 4 percent.

In contrast, because of the volatility of equity-based rates, adding an annual floor to an equity-based rate often provides a cumulative rate of return that far exceeds the rate of return provided by the equity-based rate without such floor. It should also be noted that commenters on the 2007 proposed regulations generally did not request that such an annual floor be permitted (perhaps in recognition that a minimum guaranteed annual return when applied to equity-based rates could have a significant impact on funding). Accordingly, the proposed regulations would not allow the use of an annual floor in conjunction with the rate of return on plan assets or on a permissible RIC.

On the other hand, if, instead of applying a floor on each year's rate of return, a cumulative floor is applied to an equity-based rate, the effective rate of return is not necessarily substantially greater than the rate of return provided without the floor. Specifically, the Treasury Department and the IRS have determined that, based on the modeling of long-term historical returns, a 3 percent floor that applies cumulatively (in the aggregate from the date of each principal credit until the annuity starting date, without a floor on the rate of return provided in any interim period) could be combined with any permissible rate (including a permissible equity-based rate), without increasing the effective rate of return to such an extent that the effective rate of return would be in excess of a market rate of return. As a result, the proposed rule would provide that a plan that determines interest credits using any particular interest crediting rate that satisfies the market rate of return limitation does not provide an effective interest crediting rate in excess of a market rate of return merely because the plan provides that the participant's benefit, as of the participant's annuity starting date, is equal to the greater of the benefit determined using the interest crediting rate and the benefit determined as if the plan had used a fixed annual interest crediting rate equal to 3 percent (or a rate not in excess of 3 percent) for principal credits in all years. This rule in the proposed regulations that allows for plans to utilize a cumulative floor of up to 3 percent would also allow plans some additional flexibility in design. Thus, for example, a plan that utilizes annual ceilings in conjunction with a permissible rate could also provide a cumulative floor of up to 3 percent.

Similar to the rules with respect to application of the preservation of capital requirement, the proposed regulations would provide that the determination of the guarantee provided by any cumulative floor with respect to the participant's benefit is made only at an annuity starting date on which a distribution of the participant's entire benefit as of that date under the plan's statutory hybrid benefit formula commences. The proposed regulations would also provide special rules to ensure that prior distributions are taken into account in determining whether the guarantee exceeds the benefit otherwise provided under the plan.

In addition to permitting certain fixed floors to be applied to variable rates, the proposed regulations would also permit a standalone fixed rate of interest to be used for interest crediting purposes. While the statutory language at section 411(b)(5)(B)(i)(I) does not explicitly reference a fixed interest crediting rate, the reference to "a reasonable minimum guaranteed rate of return" and the reference to "the greater of a fixed or variable rate of return" necessarily mean that some fixed rate must also be permissible. Further, the statutory language at section 411(b)(5)(B)(i)(III) specifically authorizes the Treasury Department to issue regulations permitting a fixed rate of interest under the rules relating to a market rate of return. However, reconciling a fixed interest crediting rate with the statutory requirement that an interest crediting rate "*for any plan year* shall be at a rate which is not greater than a market rate of return" [emphasis added] presents unique challenges because, by definition, fixed rates do not adjust with the market. As a result, the use of any

fixed rate will result in an interest crediting rate that is above a then-current market rate of interest during any period in which the current market rate falls below the fixed rate.

In light of this fact, the Treasury Department and the IRS believe that, in order to satisfy the market rate of return requirement, any fixed interest crediting rate allowed under the rules must not be expected to exceed future market rates of interest, except infrequently, by small amounts, and for limited durations. Based on the historical modeling described above, the Treasury Department and the IRS have determined that a 5 percent fixed rate satisfies these criteria and that any higher fixed rate would result in an effective rate of return that is in excess of a market rate of return.

Specifically, the proposed rules would provide that an annual interest crediting rate of a fixed 5 percent is a safe harbor rate deemed to be not in excess of the rate of interest on long-term investment grade corporate bonds. As a result, an interest crediting rate of a fixed 5 percent would satisfy the market rate of return limitation. In addition, the special section 411(d)(6) rule set forth in the 2010 final regulations with respect to certain changes in interest crediting rates would apply to an interest crediting rate of a fixed 5 percent and, as a result, a plan amendment that changes the interest crediting rate under the plan to the third segment rate from a fixed 5 percent is deemed to satisfy the requirements of section 411(d)(6), provided certain requirements are met.

The 2010 final regulations provide that §§ 1.411(b)(5)–1(d)(1)(iii), 1.411(b)(5)–1(d)(1)(vi), and 1.411(b)(5)–1(d)(6), which provide that the regulations set forth the exclusive list of interest crediting rates and combinations of interest crediting rates that satisfy the market rate of return requirement under section 411(b)(5), apply to plan years that begin on or after January 1, 2012. For plan years that begin before January 1, 2012, statutory hybrid plans may utilize a rate that is permissible under the 2010 final regulations or these proposed regulations for purposes of satisfying the statutory market rate of return requirement.

C. Plan Termination

The proposed regulations would provide guidance with respect to the application of the rules of section 411(b)(5)(B)(vi), which require special plan provisions relating to interest crediting rates and annuity conversion rates that apply when the plan is terminated. Under the proposed regulations, a statutory hybrid plan is treated as meeting the market rate of return requirements only if the terms of the plan satisfy the rules in the regulations relating to section 411(b)(5)(B)(vi). Title IV of ERISA also imposes special rules that apply when a single employer pension plan is terminated (including special rules relating to plan amendments). See regulations of the Pension Benefit Guaranty Corporation for additional rules that apply when a pension plan is terminated.

These proposed regulations reflect the statutory requirement that a plan provide that, if the interest crediting rate used to determine a participant's accumulated benefit (or a portion thereof) varied (that is, was not a constant fixed rate) during the 5-year period ending on the plan termination date, then the interest crediting rate used to determine the participant's accumulated benefit under the plan after the date of plan termination is equal to the average of the rates used under the plan during the 5-year period ending on the plan termination date. If the interest crediting rate used to determine a participant's accumulated benefit (or a portion thereof) was instead a single fixed rate for all periods during the 5-year period ending on the plan termination date, then the interest crediting rate used to determine the participant's accumulated benefit after the date of plan termination would be equal to that fixed rate.

Under this rule, the interest crediting rate used after plan termination would be based on the average of the rates that applied under the plan during the 5-year period preceding plan termination, without regard to whether this average rate exceeds then-current market rates of return (but, in determining the average rate, a rate would only be taken into account to the extent that the rate did not exceed a market rate of return when the rate actually applied). For purposes of this calculation, the proposed regulations would provide that, subject to certain other rules described in this preamble, the average of the rates used under the plan during the 5-year period ending on the termination date is determined with respect to a participant as the arithmetic average, expressed as an annual rate, of the applicable interest crediting rates that applied in the 5-year period. In determining this average, each interest crediting period for which the interest crediting date is within the 5-year period ending on the plan termination date would be taken into account, with interest crediting rates for periods that are less than a year in length adjusted and weighted proportionately. However, under this rule, if a period begins on or before the date that is 5 years before the termination date and ends within the 5-year period ending on the plan termination date, the period would be weighted as though the entire period were within the 5-year period ending on the plan termination date.

Section 411(b)(5)(B)(vi) does not explicitly provide rules with respect to plans that determine interest credits based on equity-based rates of return that may involve potential losses. Since the trailing 5-year average of an equity-based rate of return may have little, if any, correlation to the actual future equity-based rate of return, the Treasury Department and the IRS do not believe it is appropriate to provide that the trailing 5-year average of such rate of return be used to determine benefits after plan termination. In such cases, the Treasury Department and the IRS believe that it is appropriate to apply a bond-based rule instead. Thus, the proposed regulations would provide that, with respect to an interest crediting rate used to determine a participant's accumulated benefit for an interest crediting period during the 5-year period ending on the termination date that is not a fixed interest rate or a bond-based rate of interest (or is based on a variable rate that is not permissible under the regulations), the terms of the plan must provide that, for purposes of determining the average upon plan termination, the interest crediting rate for the interest crediting period is deemed to be equal to the third segment rate for the last calendar month ending before the beginning of the interest crediting period, as adjusted for any actual applicable floors and ceilings that applied to the rate of return in the period, but without regard to any reductions that applied to the rate of return in the period. Thus, for example, if the actual interest crediting rate in an interest crediting period was equal to the rate of return on plan assets, but not greater than 5 percent, then for purposes of determining the plan's average interest crediting rate, the interest crediting rate for that interest crediting period would be deemed to equal to the lesser of the applicable third segment rate for the period and 5 percent. However, if the actual interest crediting rate in an interest crediting period was equal to the rate of return on plan assets minus 200 basis points, then for purposes of determining the plan's average interest crediting rate, the interest crediting rate for that interest crediting period would be deemed to

equal the third segment rate (not the third segment rate minus 200 basis points). See the request for comments in this preamble under the heading "Comments and Public Hearing" regarding the application of floors, ceilings, and reductions for purposes of the plan termination provisions when the third segment rate is substituted for an equity-based rate.

As provided in section 411(b)(5)(B)(i), the regulations require that the terms of the plan also provide that the interest rate and mortality table (including tabular adjustment factors) used on and after plan termination for purposes of determining the amount of any benefit under the plan payable in the form of an annuity (commencing at or after normal retirement age) be based on the interest rate and mortality table specified under the plan for that purpose as of the termination date, except that if the interest rate is a variable rate, the interest rate is instead based on the rules described in the preceding paragraphs of this preamble using a 5-year average.

A number of special rules apply for purposes of determining the interest crediting rate that applies after plan termination. In particular, for purposes of determining the average rate during the five-year period ending on plan termination, the interest crediting rate that applied for each interest crediting period is generally the ongoing interest crediting rate that was specified under the plan in that period, without regard to any section 411(d)(6) protected benefit using an old interest crediting rate. However, if, at the end of the last interest crediting period prior to plan termination, the participant's accumulated benefit is based on a section 411(d)(6) protected benefit that results from a prior amendment to change the rate of interest crediting applicable under the plan, then, for purposes of determining the average rate, the pre-amendment interest crediting rate is treated as having applied for each interest crediting period after the date of the interest crediting rate change. In addition, the proposed regulations would provide that if the plan determines a participant's interest credits in any interest crediting period by applying different rates to different predetermined portions of the accumulated benefit as permissible under the regulations, then the participant's interest crediting rate for the interest crediting period is assumed for purposes of the plan termination provisions to be the weighted average of the fixed interest rates, determined under the plan termination rules, that apply to each portion of the accumulated benefit.

Furthermore, to reduce the administrative burden and to determine the average rate for each participant based on 5 years of interest crediting data, if the plan provided for interest credits for any interest crediting period in which, pursuant to the terms of the plan, the individual was not eligible to receive interest credits (because the individual was not a participant or beneficiary in the relevant interest crediting period or otherwise), then, for purposes of determining the interest crediting rate that applies after plan termination, the individual is treated as though the individual received interest credits in that period using the interest crediting rate that applied in that period under the terms of the plan to determine the benefit of a similarly situated participant or beneficiary who was eligible to receive interest credits. However, if, under the terms of the plan, the individual was not eligible to receive any interest credits during the entire 5-year period ending on the plan termination date, then the rules fixing the interest crediting rate do not apply to determine the individual's benefit after plan termination.

The proposed regulations include examples to illustrate the application of these plan termination rules, including how these rules would apply where a plan bases its interest crediting rate on a weighted average of more than one rate, how these rules would apply where the plan's ongoing interest crediting rate is an equity-based rate of return, and how these rules would apply to a participant whose benefits are determined where the plan had switched interest crediting rates in the past and where the interest credit prior to termination was determined by applying the old rate to the benefit attributable to principal credits before the applicable amendment date.

D. Special Rule With Respect to Changes in Interest Crediting Rates Where Plan Provides Section 411(d)(6) Protection

An inherent tension exists between the requirement not to reduce a participant's accrued benefit and the requirement that an interest crediting rate not be in excess of a market rate of return that makes changes in interest crediting rates difficult to implement for statutory hybrid plans in many circumstances. This is because, in order to satisfy section 411(d)(6), a participant's benefit can never be less than the pre-amendment benefit increased for periods after the amendment using the pre-amendment interest crediting rate, thereby effectively requiring a minimum interest crediting rate. In light of this tension, the proposed regulations would create a special market rate of return rule that applies in the case of an amendment to change the plan's interest crediting rate.

In particular, the proposed rule would provide that, in the case of an amendment to change a plan's interest crediting rate for periods after the applicable amendment date from one interest crediting rate (the old rate) that is not in excess of a market rate of return to another interest crediting rate (the new rate) that is not in excess of a market rate of return, the plan's effective interest crediting rate is not in excess of a market rate of return merely because the plan provides for the benefit of any participant who is benefiting under the plan on the applicable amendment date to never be less than what it would be if the old rate had continued but without taking into account any principal credits after the applicable amendment date. A pattern of repeated plan amendments each of which provides for a prospective change in the plan's interest crediting rate with respect to the benefit as of the applicable amendment date will be treated as resulting in the ongoing plan terms providing that the interest crediting rate equals the greater of each of the interest crediting rates, so that the special rule in the preceding sentence would not apply. See § 1.411(d)–4, A–1(c)(1). Thus, in such cases the plan will be treated as providing a rate of return that is in excess of a market rate of return, unless the resulting greater-of rate satisfies the market rate of return rules.

E. Special Rule With Respect to Interest Crediting Rate After Normal Retirement Age

In coordination with the rules under section 411(a)(13)(A) (as described in section I of this preamble) that apply with respect to the benefit determined as of each annuity starting date after normal retirement age, the proposed regulations would provide that a statutory hybrid plan is not treated as providing an effective interest crediting rate that is in excess of a market rate of return merely because the plan provides that the participant's benefit, as of each annuity starting date after normal retirement age, is equal to the greater of the benefit determined using an interest crediting rate that is not otherwise in excess of a market rate of return and the benefit that satisfies the requirements of section 411(a)(2). Thus, for example, a cash balance plan would not be treated as providing an effective interest

crediting rate in excess of a market rate of return merely because the plan credits interest after normal retirement age at a rate that is sufficient to provide any required actuarial increases.

IV. Changes in Interest Crediting Rates and Code Section 411(d)(6)

A. Background

An amendment to change a plan's interest crediting rate that only applies with respect to benefits that have not yet accrued (such as where the plan establishes a second hypothetical account balance for future principal credits to which a different interest crediting rate is applied) would not result in a reduction in accrued benefits attributable to service before the applicable amendment date and, therefore, such a change would not violate section 411(d)(6).[4] However, except to the extent permitted under section 1107 of PPA '06 or as otherwise described in section IV of this preamble, an amendment to change a plan's future interest crediting rate with respect to benefits that have already accrued (in other words, with respect to an existing account balance) must satisfy section 411(d)(6) if the change could result in interest credits that are smaller as of any date after the applicable amendment date than the interest credits that would be credited without regard to the amendment.[5]

B. Special Section 411(d)(6) Rule With Respect to Changes in Future Interest Crediting Rates

Under the 2010 final regulations, a plan is not treated as providing smaller interest credits after the applicable amendment date merely because the amendment changes the plan's future interest crediting rate with respect to benefits that have already accrued to the rate of interest on long-term investment grade corporate bonds (the third segment rate under section 430(h)(2)(C)(iii)) from one of the other bond-based safe harbor rates permitted under the 2010 final regulations (for example, a rate based on Treasury bonds with any of the margins specified in the regulations or an eligible cost-of-living index). However, the change is permitted only if: (1) The effective date of the amendment is at least 30 days after adoption, (2) the new interest crediting rate only applies to interest to be credited after the effective date of the amendment, and (3) on the effective date of the amendment, the new interest crediting rate is not lower than the interest crediting rate that would have applied in the absence of the amendment.

C. Changes That Would Otherwise Violate Section 411(d)(6) But That Are Made to the Extent Necessary To Satisfy Section 411(b)(5)

After these proposed regulations under sections 411(a)(13) and 411(b)(5) are issued as final regulations, it is expected that relief from the requirements of section 411(d)(6) will be granted for a plan amendment that eliminates or reduces a section 411(d)(6) protected benefit, provided that the amendment is adopted before those final regulations apply to the plan, and the elimination or reduction is made only to the extent necessary to enable the plan to meet the requirements of section 411(b)(5).[6] It is expected that this section 411(d)(6) relief will be available in the case of an amendment that reduces the future interest crediting rate with respect to benefits that have already accrued from a rate that is in excess of a market rate of return under the final market rate of return rules to the extent necessary to constitute a permissible rate under the final market rate of return rules. However, it is expected that this relief would not permit a plan with an interest crediting rate within the list of permitted rates under the final market rate of return rules to change to another permitted rate because the change would not be necessary to enable the plan to satisfy the requirements of section 411(b)(5). Similarly, it is expected that this relief would not permit a plan with an interest crediting rate that is impermissible under the final market rate of return rules to change to a permissible rate using less than the maximum permitted margin for that rate because the reduction would be more than necessary to enable the plan to satisfy the requirements of section 411(b)(5). For purposes of the preceding sentence, a rate without an associated margin is treated as having a maximum permitted margin of zero. See the request for comments, under the heading "Comments and Public Hearing" in this preamble, regarding limitations on the scope of this anticipated relief under § 1.411(d)–4, A–2(b)(2)(i) because the relief must be limited to amendments that change a plan's interest crediting rate only to the extent necessary to enable the plan to satisfy the requirements of section 411(b)(5).

Proposed Effective/Applicability Dates

The specific rules that would be implemented under the proposed regulations generally would apply to plan years that begin on or after January 1, 2012. However, as stated in the preamble to the 2010 final regulations, a plan is permitted to rely on the provisions of these proposed regulations, as well as the 2010 final regulations, the 2007 proposed regulations, and Notice 2007–6, for purposes of satisfying the requirements of sections 411(a)(13) and 411(b)(5) for periods before the regulatory effective date.

Special Analyses

It has been determined that these proposed regulations are not a significant regulatory action as defined in Executive Order 12866. Therefore, a regulatory assessment is not required. It also has been determined that section 553(b) of the Administrative Procedure Act (5 U.S.C. chapter 5) does not apply to these regulations, and because the regulation does not impose a collection of information on small entities, the Regulatory Flexibility Act (5 U.S.C. chapter 6) does not apply. Pursuant to section 7805(f) of the Code, these regulations have been submitted to the Chief Counsel for Advocacy of the Small Business Administration for comment on its impact on small business.

Comments and Public Hearing

Before these proposed regulations are adopted as final regulations, consideration will be given to any written (a signed original and eight (8) copies) or electronic comments that are submitted timely to the IRS. The Treasury Department and the IRS specifically request comments on the clarity of the proposed regulations and how they may be made easier to understand.

In addition to comments on issues addressed in these proposed regulations, the Treasury Department

[4] However, see section 204(h) of ERISA and section 4980F of the Code for notice requirements relating to amendments that provide for a significant reduction in the rate of future benefit accrual.

[5] Except to the extent permitted under section 411(d)(6) and §§ 1.411(d)–3 and 1.411(d)–4, another Code provision, or another statutory provision such as section 1107 of PPA '06, section 411(d)(6) prohibits a plan amendment that decreases a participant's accrued benefits or that has the effect of eliminating or reducing an early retirement benefit or retirement-type subsidy, or eliminating an optional form of benefit, with respect to benefits attributable to service before the amendment.

[6] Announcement 2009–82 and Notice 2009–97 stated that the IRS and the Treasury Department expected to provide such relief. While Notice 2009–97 indicated the relief would only apply if the amendment is adopted by the last day of the first plan year that begins on or after January 1, 2010, this preamble supersedes that applicability date to provide that it is expected that this relief would apply if the amendment is adopted before final regulations that finalize these proposed regulations apply to the plan.

and the IRS specifically request comments on the following issues:

• Should a defined benefit plan that expresses a participant's accumulated benefit as a current single-sum dollar amount and that does not provide for interest credits be excluded from the definition of a statutory hybrid plan?

• In the case of a statutory hybrid plan that credits interest using an interest crediting rate equal to the rate of return on a RIC, how does section 411(d)(6) apply if the underlying RIC subsequently ceases to exist?

• The proposed regulations permit certain fixed interest crediting rates (a fixed 5 percent rate for any year, the greater of 4 percent or certain bond-based indices for any year, and a cumulative minimum 3 percent annual rate). Comments regarding these specific proposed rules should take into account how any general legal standard for a market rate of return would be applied in different economic circumstances with variable interest rate markets, as well as the related ability that would generally be available under these proposed regulations at § 1.411(b)(5)–1(e)(3)(iii) for the plan sponsor to change the crediting rate on an existing hypothetical account balance for active participants from one interest crediting rate to another, including the risk that whatever fixed rate is permitted might allow a plan's interest credits to exceed market rates of interest either frequently, by an amount that might be large, or for an extended duration. Commenters recommending any additional types of rates of return than those in these proposed regulations should justify how those rates meet a market rate of return, taking into account the minimum guarantee rules.

• Should a statutory hybrid plan be able to offer participants a menu of hypothetical investment options (including a life-cycle investment option, whereby participants are automatically transitioned incrementally at certain ages from a blended rate that is more heavily equity-weighted to a rate that is more heavily bond-weighted) and, if so, what plan qualification issues (*i.e.,* forfeiture, section 411(d)(6), market rate of return, and other section 411(b)(5) issues) arise under such a plan design? In particular, do the following events raise issues: (1) A participant elects to switch from one investment option to another; (2) a bond index or RIC underlying one of the investment options ceases to exist; (3) the plan is amended to eliminate an investment option; (4) a participant elects to switch from an investment option with a cumulative minimum to an investment option without a cumulative minimum (or vice versa); or (5) the plan is terminated and, pursuant to the special rules that apply upon plan termination, the interest crediting rate that applies to determine a participant's benefit after plan termination must be fixed?

• How does a statutory hybrid plan that provides benefits under a statutory hybrid benefit formula other than a lump sum-based benefit formula (such as a plan that provides for indexing as described in section 411(b)(5)(E))—a plan to which section 411(a)(13)(A) does not apply—ensure compliance with the minimum present value rules of section 417(e)?

• How does a statutory hybrid plan determine the section 417(e) minimum present value of the participant's benefit where a portion of the benefit is determined based partly on the benefit under a lump sum-based benefit formula, although that portion is not determined under a lump sum-based benefit formula? For example, where a portion of the accrued benefit is equal to the excess of the benefit under a traditional defined benefit formula over the benefit under a hypothetical account formula, how is the present value of that portion of the accrued benefit determined?

• Should the proposed alternative method of satisfying the conversion protection requirements that does not require a comparison of benefits at the annuity starting date be broadened to apply to forms of distribution other than a single-sum distribution? If this rule should be broadened, what rules would ensure that the benefit attributable to the opening hypothetical account balance is not less than the benefit available under the same generalized optional form under the pre-conversion formula (which may include subsidized early retirement benefits and other retirement-type subsidies) consistent with the goal of having a simplified alternative?

• How does a statutory hybrid plan that uses a variable interest crediting rate that may potentially be negative satisfy the fractional rule of section 411(b)(1)(C) if the 133⅓ percent rule of section 411(b)(1)(B) is not satisfied?

• For purposes of the plan termination rules, should a floor, ceiling, or reduction that applied to an equity-based rate in an interest crediting period be treated as applying in the same manner to the third segment rate or is it appropriate for such an adjustment to be disregarded or otherwise modified for purposes of such rules?

• Under the relief to be provided pursuant to § 1.411(d)–4, A–2(b)(2)(i), which authorizes amendments that reduce a section 411(d)(6) protected benefit only to the extent necessary to satisfy the requirements of section 411(b)(5), should a statutory hybrid plan with an interest crediting rate that is impermissible under the final market rate of return rules be permitted to be amended to change the future interest crediting rate with respect to benefits that have already accrued to any permissible rate using the maximum permitted margin for that rate or should that be dependent upon the reasons that the pre-amendment rate exceeded a market rate of return? Thus, for example, should a plan with an impermissible bond-based rate (without a fixed component) be permitted to switch to any permissible rate, bond-based or otherwise, using the maximum permitted margin for that rate? Should a plan with an impermissibly high standalone fixed rate be permitted to switch to the maximum rate of any type, should it be permitted to switch to the maximum permitted bond-based rate with the maximum permitted floor for that rate (the third segment rate with a fixed 4 percent floor), or must it switch to the maximum permitted standalone fixed rate (a fixed rate of 5 percent)? Should a plan with a permissible bond-based rate but with an impermissibly high fixed floor be permitted to switch to the maximum rate of any type, should it be permitted to retain the pre-amendment bond-based rate while reducing the floor to the maximum permitted floor for that rate (a fixed 4 percent floor), should it be permitted to switch to the maximum permitted standalone fixed rate (a fixed rate of 5 percent), or must it switch to the maximum permitted bond-based rate with the maximum permitted floor for that rate (the third segment rate with a fixed 4 percent floor)?

All comments will be available for public inspection and copying. A public hearing has been scheduled for Wednesday, January 26, 2011, beginning at 10 a.m. in the Auditorium, Internal Revenue Service, 1111 Constitution Avenue, NW., Washington, DC. Due to building security procedures, visitors must enter at the Constitution Avenue entrance. In addition, all visitors must present photo identification to enter the building. Because of access restrictions, visitors will not be admitted beyond the immediate entrance area more than 30 minutes before the hearing starts. For information about having your name placed on the building access list to attend the hearing, see the **FOR FURTHER INFORMATION CONTACT** section of this preamble.

The rules of 26 CFR 601.601(a)(3) apply to the hearing. Persons who wish to present oral comments at the hearing must submit written or electronic comments by Wednesday, January 12, 2011, and an outline of topics to be discussed and the amount of time to be devoted to each topic (a signed original and eight (8) copies) by Friday, January 14, 2011. A period of 10 minutes will be allotted to each person for making comments. An agenda showing the scheduling of the speakers will be prepared after the deadline for receiving outlines has passed. Copies of the agenda will be available free of charge at the hearing.

Drafting Information

The principal authors of these regulations are Neil S. Sandhu, Lauson C. Green, and Linda S. F. Marshall, Office of Division Counsel/Associate Chief Counsel (Tax Exempt and Government Entities). However, other personnel from the IRS and the Treasury Department participated in the development of these regulations.

List of Subjects in 26 CFR Part 1

Income taxes, Reporting and recordkeeping requirements.

Proposed Amendments to the Regulations

Accordingly, 26 CFR part 1 is proposed to be amended as follows:

PART 1—INCOME TAXES

Paragraph 1. The authority citation for part 1 continues to read in part as follows:

Authority: 26 U.S.C. 7805 * * *

Par. 2. Section 1.411(a)(13)–1 is amended by revising paragraphs (b)(2), (b)(3), (b)(4), and (e)(2)(ii) to read as follows:

§ 1.411(a)(13)–1 Statutory hybrid plans.

* * * * *

(b) * * *

(2) *Requirements that lump sum-based benefit formula must satisfy to obtain relief*—(i) *In general.* The relief of paragraph (b)(1) of this section does not apply with respect to benefits determined under a lump sum-based benefit formula unless the requirements of paragraphs (b)(2)(ii) through (iv) of this section are satisfied.

(ii) *Benefit on or before normal retirement age.* A plan satisfies this paragraph (b)(2)(ii) only if, at all times on or before normal retirement age, the then-current balance of the hypothetical account or the then-current value of the accumulated percentage of the participant's final average compensation is not less than the present value, determined using reasonable actuarial assumptions, of the portion of the participant's accrued benefit that is determined under the lump sum-based benefit formula. However, a plan is deemed to satisfy the requirement in the preceding sentence for periods before normal retirement age if, upon attainment of normal retirement age, the then-current balance of the hypothetical account or the then-current value of the accumulated percentage of the participant's final average compensation is actuarially equivalent (using reasonable actuarial assumptions) to the portion of the participant's accrued benefit that is determined under the lump sum-based benefit formula.

(iii) *Benefit after normal retirement age.* A plan satisfies this paragraph (b)(2)(iii) only if, as of each annuity starting date after normal retirement age, the then-current balance of the hypothetical account or the then-current value of the accumulated percentage of the participant's final average compensation—

(A) Satisfies the requirements of section 411(a)(2); or

(B) Would satisfy the requirements of section 411(a)(2) but for the fact that the plan suspends benefits in accordance with section 411(a)(3)(B).

(iv) *Reductions limited.* A plan satisfies this paragraph (b)(2)(iv) only if the balance of the hypothetical account or accumulated percentage of the participant's final average compensation may not be reduced except as a result of—

(A) Benefit payments under paragraph (b)(3) of this section;

(B) Qualified domestic relations orders under section 414(p);

(C) Forfeitures that are permitted under section 411(a) (such as charges for providing a qualified preretirement survivor annuity);

(D) Amendments that are permitted under section 411(d)(6); or

(E) Adjustments resulting from the application of interest credits (under the rules of § 1.411(b)(5)–1) that are negative for a period, for plans that express the accumulated benefit as the balance of a hypothetical account.

(3) *Alternative forms of distribution under a lump sum-based benefit formula*—(i) *Payment of current account balance or current value.* The relief of paragraph (b)(1) of this section applies with respect to a single-sum payment equal to the then-current balance of a hypothetical account maintained for the participant or the then-current value of an accumulated percentage of the participant's final average compensation.

(ii) *Payment of benefits that are actuarially equivalent to current account balance or current value.* With respect to the benefits under a lump sum-based benefit formula, the relief of paragraph (b)(1) of this section applies to an optional form of benefit that is determined as of the annuity starting date as the actuarial equivalent, using reasonable actuarial assumptions, of the then-current balance of a hypothetical account maintained for the participant or the then-current value of an accumulated percentage of the participant's final average compensation.

(iii) *Payment of benefits based on immediate annuity.* With respect to the benefits under a lump sum-based benefit formula, the relief of paragraph (b)(1) of this section applies to an optional form of benefit that is not subject to the minimum present value requirements of section 417(e) and that is determined under the plan as of the annuity starting date as the actuarial equivalent (using reasonable actuarial assumptions) of the optional form of benefit that—

(A) Commences as of the same annuity starting date;

(B) Is payable in the same generalized optional form (within the meaning of § 1.411(d)–3(g)(8)) as the accrued benefit; and

(C) Is the actuarial equivalent (using reasonable actuarial assumptions) of the then-current balance of a hypothetical account maintained for the participant or the then-current value of an accumulated percentage of the participant's final average compensation.

(iv) *Payment of portion of current account balance or current value.* The relief of paragraph (b)(1) of this section applies on a proportionate basis to a payment of a portion of the benefit under a lump sum-based benefit formula that is not paid in a form otherwise described in this paragraph (b)(3), such as a payment of a specified dollar amount or percentage of the then-current balance of a hypothetical account maintained for the participant or then-current value of an accumulated percentage of the participant's final average compensation. Thus, for example, if a plan that expresses the participant's entire accumulated benefit as the balance of a hypothetical account distributes 40 percent of the participant's then-current hypothetical account balance in a single payment, the plan is treated as satisfying the requirements of section 411(a) and the minimum present value rules of section 417(e) with respect to 40 percent of the participant's then-current accrued

benefit. See paragraph (b)(3)(ii) or (iii) of this section for relief applicable with respect to a distribution with respect to the remainder (60 percent) of the participant's accumulated benefit.

(v) *Conditions for applicability.* This paragraph (b)(3) applies to a payment of benefits under a lump sum-based benefit formula only if the requirements of paragraph (b)(2) of this section are also satisfied.

(4) *Rules of application.* The relief of paragraph (b)(1) of this section applies only to the portion of the participant's benefit that is determined under a lump sum-based benefit formula and does not apply to any portion of the participant's benefit that is determined under a formula that is not a lump sum-based benefit formula. Thus, the following rules apply:

(i) *Greater-of formulas.* Where the participant's accrued benefit equals the greater of the benefit under a lump sum-based benefit formula and the benefit under another formula, a single-sum payment of the participant's entire benefit must equal the greater of the then-current accumulated benefit under the lump sum-based benefit formula and the present value, determined in accordance with section 417(e), of the benefit under the other formula. Applying this rule where the non-lump sum-based benefit formula provides a benefit equal to a pro rata portion of the benefit determined by projecting a future hypothetical account balance (including future principal credits), a single-sum payment of the participant's entire benefit must equal the greater of the then-current balance of the hypothetical account and the present value, determined in accordance with section 417(e), of the pro-rata benefit determined by projecting the future hypothetical account balance.

(ii) "*Sum-of*" *formulas.* Where the accrued benefit equals the sum of the benefit under a lump sum-based benefit formula plus the excess of the benefit under another formula over the benefit under the lump sum-based benefit formula, a single-sum payment of the participant's entire benefit must equal the then-current accumulated benefit under the lump sum-based benefit formula plus the excess of the present value, determined in accordance with section 417(e), of the benefit under the other formula over the present value, determined in accordance with section 417(e), of the benefit under the lump sum-based benefit formula.

* * * * *

(e) * * *

(2) * * *

(ii) *Special effective date.* Paragraphs (b)(2), (b)(3), and (b)(4) of this section apply to plan years that begin on or after January 1, 2012.

* * * * *

Par. 3. Section 1.411(b)–1 is amended by adding paragraph (b)(2)(ii)(G) and (b)(2)(ii)(H) to read as follows:

§ 1.411(b)–1 Accrued benefit requirements.

* * * * *

(b) * * *

(2) * * *

(ii) * * *

(G) Special rule for multiple formulas. [Reserved]

(H) *Variable interest crediting rate under a statutory hybrid benefit formula.* For plan years that begin on or after January 1, 2012, a plan that determines any portion of the participant's accrued benefit pursuant to a statutory hybrid benefit formula (as defined in § 1.411(a)(13)–1(d)(4)) that utilizes an interest crediting rate described in § 1.411(b)(5)–1(d) that is a variable rate that was less than zero for the prior plan year is not treated as failing to satisfy the requirements of paragraph (b)(2) of this section for the current plan year merely because the plan assumes for purposes of paragraph (b)(2) of this section that the variable rate is zero for the current plan year and all future plan years.

* * * * *

Par. 4. Section 1.411(b)(5)–1 is amended by:

1. Revising paragraph (c)(3)(iii).
2. Adding *Example 8* to paragraph (c)(5).
3. Revising paragraphs (d)(1)(iv)(D), (d)(2)(ii), (d)(4)(iv), (d)(5)(ii), (d)(5)(iv), (d)(6)(ii), (d)(6)(iii), (e)(2), (e)(3)(iii), (e)(4), and (f)(2)(i)(B).

The revisions and addition read as follows:

§ 1.411(b)(5)–1 Reduction in rate of benefit accrual under a defined benefit plan.

* * * * *

(c) * * *

(3) * * *

(iii) *Comparison of benefits at effective date of conversion amendment*—(A) *In general.* A plan satisfies the requirements of this paragraph (c)(3)(iii) with respect to a participant only if an opening hypothetical account balance is established to replicate the pre-conversion benefit and the requirements of paragraphs (c)(3)(iii)(B) through (c)(3)(iii)(G) of this section are each satisfied.

(B) *Single-sum payment.* At the annuity starting date, the participant elects to receive payment in the form of a single-sum distribution equal to the sum of the then-current balance of the hypothetical account used to replicate the pre-conversion benefit and the benefit attributable to post-conversion service under the post-conversion benefit formula.

(C) *Not less than pre-conversion benefit.* In accordance with section 411(d)(6), the aggregate benefit payable at the annuity starting date after the effective date of the conversion amendment is not less than the benefit described in paragraph (c)(2)(i)(A) of this section.

(D) *Form of pre-conversion benefit.* The plan, as in effect immediately prior to the effective date of the conversion amendment, either did not provide a single-sum payment option (for benefits that cannot be immediately distributed under section 411(a)(11)) or provided a single-sum payment option that was based solely on the present value of the benefit payable at normal retirement age (or at date of benefit commencement, if later), and which was not based on the present value of the benefit payable commencing at any date prior to normal retirement age.

(E) *Minimum opening account balance.* The plan provides for the opening hypothetical account balance under paragraph (c)(3)(i) of this section to be established in accordance with rules under which the amount of this opening balance will not be less than the present value, determined in accordance with section 417(e), of the participant's accrued benefit under the plan immediately prior to the effective date of the conversion amendment.

(F) *Interest credits*—(*1*) *Requirement as of effective date of conversion amendment.* As of the effective date of the conversion amendment, the interest crediting rate under the plan is an interest crediting rate described in paragraph (d)(3) or (d)(4) of this section. In addition, as of that date, the value of the index used to determine the interest crediting rate under the plan is at least as great for every participant or beneficiary as the interest rate that was used pursuant to paragraph (c)(3)(iii)(E) of this section to determine the opening hypothetical account balance. This requirement is satisfied, for example, if each participant's opening hypothetical account balance is determined using the applicable interest rate and applicable mortality table under section 417(e)(3), the interest crediting rate under the plan is the third segment rate, and, at the effective date of the conversion amendment, the third segment rate is the highest of the three segment rates.

(*2*) *Requirement for later interest crediting rate changes.* If, subsequent to the effective date of the conversion amendment, the interest crediting rate

changes (whether by plan amendment or otherwise) with respect to a participant who was a participant at the time of the effective date of the conversion amendment from a particular interest crediting rate described in paragraph (d)(3) or (d)(4) of this section to a different interest crediting rate that is not in all cases at least as great as the prior interest crediting rate under the plan, then the new interest crediting rate does not apply to the existing hypothetical account balance as of the effective date of the change in interest crediting rates (or, if the plan created a subaccount consisting of the opening hypothetical account balance and interest credits on that subaccount, then the new interest crediting rate does not apply to the subaccount).

(G) *Death benefits.* The plan either—

(*1*) Provides a death benefit after the effective date of the conversion amendment which has a present value that is at all times at least equal to the then-current balance of the hypothetical account used to replicate the pre-conversion benefit; or

(*2*) Applied no pre-retirement mortality decrement in establishing the opening hypothetical account balance under paragraph (c)(3)(iii)(E) of this section.

* * * * *

(c) * * *

(5) * * *

Example 8. (i) *Facts where plan establishes opening hypothetical account balance under paragraph (c)(3)(iii) of this section.* Employer O sponsors Plan F, a defined benefit plan that provides an accumulated benefit, payable as a straight life annuity commencing at age 65 (which is Plan F's normal retirement age), based on a percentage of highest average compensation times the participant's years of service. Plan F permits any participant who has had a severance from employment to elect payment in the following optional forms of benefit (with spousal consent if applicable), with any payment not made in a straight life annuity converted to an equivalent form based on reasonable actuarial assumptions: A straight life annuity; and a 50 percent, 75 percent, or 100 percent joint and survivor annuity. The payment of benefits may commence at any time after attainment of age 55, with an actuarial reduction if the commencement is before normal retirement age. In addition, the plan offers a single-sum payment after attainment of age 55 equal to the present value of the normal retirement benefit using the applicable interest rate and mortality table under section 417(e)(3) in effect under the terms of the plan on the annuity starting date. (These facts are the same as those in paragraph (i) of *Example 1.*)

(ii) *Facts relating to the conversion amendment and establishment of opening balance.* On January 1, 2012, Plan F is amended to eliminate future accruals under the highest average compensation benefit formula and to base future benefit accruals on a hypothetical account balance. As of January 1, 2012, the plan establishes an opening hypothetical account balance for each individual who was a participant in the plan on December 31, 2011, equal to the present value of the participant's accumulated benefits, payable as a straight life annuity commencing at age 65, based on the actuarial assumptions then applicable under section 417(e)(3). New participants begin with a hypothetical account balance of zero on their date of participation. For service on or after January 1, 2012, each participant's hypothetical account balance is credited monthly with a pay credit equal to a specified percentage of the participant's compensation during the month and also with interest based on the third segment rate described in section 430(h)(2)(C)(iii). With respect to benefits under the hypothetical account balance, a participant is permitted to elect (with spousal consent) payment in the same generalized optional forms of benefit (even though different actuarial factors apply) as under the terms of the plan in effect before January 1, 2012, and also as a single-sum distribution. The plan provides that in no event will the benefit payable be less than the benefits attributable to service before January 1, 2012, to be determined under the terms of the plan as in effect immediately before the effective date of the amendment. In the event of death prior to the annuity starting date, the plan provides a death benefit equal to the hypothetical account balance (and allows a surviving spouse to elect payment in the form of an actuarially equivalent life annuity).

(iii) *Conclusion.* Plan F satisfies the requirements of paragraph (c)(3)(iii) of this section for participants who elect to receive payment in the form of a single-sum distribution equal to the hypothetical account balance in accordance with the requirements of paragraph (c)(3)(iii)(B) of this section for the following reasons. First, Plan F satisfies the requirements of paragraph (c)(3)(iii)(C) of this section because the benefit payable can never be less than the pre-conversion benefit, in accordance with the requirements of section 411(d)(6). Second, Plan F satisfies the requirements of paragraph (c)(3)(iii)(D) of this section because prior to conversion it provided for a single-sum payment option that was based solely on the present value of the benefit payable at normal retirement age. Third, Plan F satisfies the requirements of paragraph (c)(3)(iii)(E) of this section because the amount of the opening balance is not less than the present value of the participant's accrued benefit under the plan immediately prior to the effective date of the conversion amendment, as determined in accordance with section 417(e). Fourth, Plan F satisfies the requirements of paragraph (c)(3)(iii)(F) of this section because it provides for interest credits that are described in paragraph (d)(3) of this section on the opening balance and the interest credits are reasonably expected to be no lower than the interest rate used to determine the opening balance. This is the case because interest is credited at least annually after the effective date of the conversion amendment and the interest rate used to establish the opening balance (which is based on the first, second, and third segment rates described in section 430(h)(2)(C) referenced under section 417(e)(3)) is not greater than the interest rate applicable under the third segment rate described in section 430(h)(2)(C)(iii) which the plan uses to determine interest for all future periods after the effective date of the conversion amendment. Fifth, Plan F satisfies the requirements of paragraph (c)(3)(iii)(G) of this section because it provides a death benefit after the effective date of the conversion amendment which has a present value that is at all times at least equal to the hypothetical account balance at the date of death.

* * * * *

(d) * * *

(1) * * *

(iv) * * *

(D) *Debits and credits during the interest crediting period.* A plan is not treated as failing to meet the requirements of this paragraph (d) merely because the plan does not provide for interest credits on amounts distributed prior to the end of the interest crediting period. Furthermore, a plan is not treated as failing to meet the requirements of this paragraph (d) merely because the plan calculates increases or decreases to the participant's accumulated benefit by applying a rate of interest or rate of return (including a rate of increase or decrease under an index) to the participant's adjusted accumulated benefit (or portion thereof) for the period. For this purpose, the participant's adjusted accumulated benefit equals the participant's accumulated benefit as of the beginning of the period, adjusted for debits and credits (other than interest credits) made to the accumulated benefit prior to the end of the interest crediting period, with appropriate weighting for those debits and credits based on their timing within the period. For plans that calculate increases or decreases to the participant's accumulated benefit by applying a rate of interest or rate of return to the participant's adjusted accumulated benefit (or portion thereof) for the period, interest credits include these increases and decreases, to the extent provided under the terms of the plan at the beginning of the period and to the extent not conditioned on current service and not made on account of imputed service (as defined in § 1.401(a)(4)–11(d)(3)(ii)(B)), and the interest crediting rate with respect to a participant equals the total amount of interest credits for the period divided by

the participant's adjusted accumulated benefit for the period.

* * * * *

(2) * * *

(ii) *Application to multiple annuity starting dates*—(A) *In general.* Paragraph (d)(2)(i) of this section applies only at an annuity starting date, within the meaning of § 1.401(a)–20, A–10(b), on which a distribution of the participant's entire benefit under the plan's statutory hybrid benefit formula as of that date commences. For a participant who has more than one annuity starting date, paragraph (d)(2)(ii)(B) of this section provides rules for the application of paragraph (d)(2)(i) of this section, taking into account prior distributions. If the comparison under paragraph (d)(2)(ii)(B) of this section results in the sum of principal credits exceeding the sum of the amounts described in paragraphs (d)(2)(ii)(B)(*1*) through (d)(2)(ii)(B)(*3*) of this section, then the participant's benefit to be distributed at the current annuity starting date is increased by an amount equal to the excess.

(B) *Comparison to reflect prior distributions.* For a participant who has more than one annuity starting date, the sum of all principal credits credited to the participant under the plan, as of the current annuity starting date, is compared to the sum of—

(*1*) The participant's benefit as of the current annuity starting date;

(*2*) The amount of the offset to the participant's benefit under the statutory hybrid benefit formula that is attributable to any prior distribution of the participant's benefit under that formula; and

(*3*) The amount of any increase to the participant's benefit as a result of the application of paragraph (d)(2)(i) of this section to a prior distribution.

* * * * *

(4) * * *

(iv) *Fixed rate of interest.* An annual interest crediting rate equal to a fixed 5 percent is deemed to be not in excess of the interest rate described in paragraph (d)(3) of this section.

* * * * *

(5) * * *

(ii) *Actual rate of return on plan assets.* An interest crediting rate equal to the actual rate of return on the aggregate assets of the plan, including both positive returns and negative returns, is not in excess of a market rate of return if the plan's assets are diversified so as to minimize the volatility of returns. This requirement that plan assets be diversified so as to minimize the volatility of returns does not require greater diversification than is required under section 404(a)(1)(C) of Title I of the Employee Retirement Income Security Act of 1974, Public Law 93–406 (88 Stat. 829 (1974)) with respect to defined benefit pension plans.

* * * * *

(iv) *Rate of return on certain RICs.* An interest crediting rate is not in excess of a market rate of return if it is equal to the rate of return on a regulated investment company (RIC), as defined in section 851, that is reasonably expected to be not significantly more volatile than the broad United States equities market or a similarly broad international equities market. For example, a RIC that has most of its assets invested in securities of issuers (including other RICs) concentrated in an industry sector or a country other than the United States, that uses leverage, or that has significant investment in derivative financial products, for the purpose of achieving returns that amplify the returns of an unleveraged investment, generally would not meet this requirement. Thus, a RIC that has most of its investments concentrated in the semiconductor industry or that uses leverage in order to provide a rate of return that is twice the rate of return on the Standard & Poor's 500 index (S&P 500) would not meet this requirement. On the other hand, a RIC whose investments track the rate of return on the S&P 500, a broad-based "small-cap" index (such as the Russell 2000 index), or a broad-based international equities index would meet this requirement.

* * * * *

(6) * * *

(ii) *Annual or more frequent floor applied to bond-based rates.* An interest crediting rate under a plan does not fail to be described in paragraph (d)(3) or (d)(4) of this section for an interest crediting period merely because the plan provides that the interest crediting rate for that interest crediting period equals the greater of—

(A) An interest crediting rate described in paragraph (d)(3) or (d)(4) of this section; and

(B) An annual interest rate of 4 percent (or a pro rata portion of an annual interest rate of 4 percent for plans that provide interest credits more frequently than annually).

(iii) *Cumulative floor applied to equity-based or bond-based rates*—(A) *In general.* A plan that determines interest credits under a statutory hybrid benefit formula using a particular interest crediting rate described in paragraph (d)(3), (d)(4), or (d)(5) of this section (or an interest crediting rate that can never be in excess of a particular interest crediting rate described in paragraph (d)(3), (d)(4), or (d)(5) of this section) does not provide an effective interest crediting rate in excess of a market rate of return merely because the plan provides that the participant's benefit under the statutory hybrid benefit formula determined as of the participant's annuity starting date is equal to the greater of—

(*1*) The benefit determined using the interest crediting rate; and

(*2*) The benefit determined as if the plan had used a fixed annual interest crediting rate equal to 3 percent (or a lower rate) for all principal credits that are made during the guarantee period (minimum guarantee amount).

(B) *Guarantee period defined.* The guarantee period is the prospective period which begins on the date on which the cumulative floor described in this paragraph (d)(6)(iii) begins to apply to the participant's benefit and which ends on the date on which that cumulative floor ceases to apply to the participant's benefit.

(C) *Application to multiple annuity starting dates.* The determination under paragraph (d)(6)(iii)(A) of this section is made only at an annuity starting date, within the meaning of § 1.401(a)–20, A–10(b), on which a distribution of the participant's entire benefit under the plan's statutory hybrid benefit formula as of that date commences. For a participant who has more than one annuity starting date, paragraph (d)(6)(iii)(D) of this section provides rules for the application of paragraph (d)(6)(iii)(A) of this section, taking into account any prior distributions. If the comparison under paragraph (d)(6)(iii)(D) of this section results in the minimum guarantee amount exceeding the sum of the amounts described in paragraphs (d)(6)(iii)(D)(*1*) through (d)(6)(iii)(D)(*3*) of this section, then the participant's benefit to be distributed at the current annuity starting date is increased by an amount equal to the excess.

(D) *Comparison to reflect prior distributions.* For a participant who has more than one annuity starting date, the minimum guarantee amount (described in paragraph (d)(6)(iii)(A)(*2*) of this section), as of the current annuity starting date, is compared to the sum of—

(*1*) The participant's benefit, as of the current annuity starting date, to which a minimum guaranteed rate described in paragraph (d)(6)(iii)(A)(*2*) of this section applies;

(*2*) The amount of the offset to the participant's benefit under the statutory hybrid benefit formula that is attributable to any prior distribution of

the participant's benefit under that formula and to which a minimum guaranteed rate described in paragraph (d)(6)(iii)(A)(*2*) of this section applied, together with interest at that minimum guaranteed rate annually from the prior annuity starting date to the current annuity starting date; and

(*3*) The amount of any increase to the participant's benefit as a result of the application of paragraph (d)(6)(iii)(A) of this section to any prior distribution, together with interest annually at the minimum guaranteed rate that applied to the prior distribution from the prior annuity starting date to the current annuity starting date.

(E) *Application to portion of participant's benefit.* A cumulative floor described in this paragraph (d)(6)(iii) may be applied to a portion of a participant's benefit, provided the requirements of this paragraph (d)(6)(iii) are satisfied with respect to that portion of the benefit. If a cumulative floor described in this paragraph (d)(6)(iii) applies to a portion of a participant's benefit, only the principal credits that are attributable to that portion of the participant's benefit are taken into account in determining the amount of the guarantee described in paragraph (d)(6)(iii)(A)(*2*) of this section.

* * * * *

(e) * * *

(2) *Plan termination*—(i) *In general*—(A) *Interest crediting rates.* If the interest crediting rate used to determine a participant's accumulated benefit (or a portion thereof) has been a variable rate during the interest crediting periods in the 5-year period ending on the plan termination date (including any case in which the rate was not the same fixed rate during all such periods), then a statutory hybrid plan is treated as meeting the requirements of section 411(b)(5)(B)(i) and paragraph (d)(1) of this section only if the terms of the plan satisfy the requirements of paragraph (e)(2)(ii) of this section. See regulations of the Pension Benefit Guaranty Corporation for additional rules that apply when a pension plan is terminated.

(B) *Annuity conversion factors.* A statutory hybrid plan is treated as meeting the requirements of section 411(b)(5)(B)(i) and paragraph (d)(1) of this section only if the terms of the plan provide that the interest rate and mortality table (including tabular adjustment factors) used on and after plan termination for purposes of determining the amount of any benefit under the plan payable in the form of an annuity commencing at or after normal retirement age are the interest rate and mortality table specified under the plan for that purpose as of the termination date, except that if the interest rate is a variable rate (as described in paragraph (e)(2)(i) of this section), then the interest rate for that purpose is determined pursuant to the rules of paragraph (e)(2)(ii) of this section.

(ii) *Interest crediting rates that are variable*—(A) *General rule.* Subject to the other rules in this paragraph (e)(2), a plan satisfies this paragraph (e)(2)(ii) only if the terms of the plan provide that, on the plan termination date, if the interest crediting rate used to determine a participant's accumulated benefit has been a variable rate as described in paragraph (e)(2)(i) of this section, then the interest crediting rate used to determine the participant's accumulated benefit under the plan after the date of plan termination is equal to the average of the interest crediting rates used under the plan during the 5-year period ending on the plan termination date. For this purpose, an interest crediting rate is used under the plan if the rate applied under the terms of the plan during an interest crediting period for which the interest crediting date is within the 5-year period ending on the plan termination date and the average is determined as the arithmetic average of the rates used, with each rate adjusted to reflect the length of the interest crediting period and the average rate expressed as an annual rate.

(B) *Variable interest crediting rates that are based on interest rates.* With respect to an interest crediting rate that was a variable interest rate described in paragraph (d)(3) or (d)(4) of this section (taking into account the rules of paragraph (d)(6)(ii) of this section), a variable interest rate that can never be in excess of a rate described in paragraph (d)(3) or (d)(4) of this section, or a fixed interest rate that has not been the same rate during the entire 5-year period ending on the plan termination date, the actual interest rate that applied under the plan for the interest crediting period is used for purposes of determining the average interest crediting rate. For this purpose, the rate that applied for the interest crediting period takes into account minimums, maximums, and other reductions that applied in the period, other than cumulative floors under paragraph (d)(6)(iii) of this section.

(C) *Variable interest crediting rates that are other rates of return.* With respect to any interest crediting rate not described in paragraph (e)(2)(ii)(B) of this section (that is, a variable rate described in paragraph (d)(5) of this section), the interest crediting rate that applied for the interest crediting period for purposes of determining the average interest crediting rate is deemed to be equal to the third segment rate under section 430(h)(2)(C)(iii) for the last calendar month ending before the beginning of the interest crediting period, as adjusted to account for any minimums or maximums that applied in the period (other than cumulative floors under paragraph (d)(6)(iii) of this section), but without regard to other reductions that applied in the period. Thus, for example, if the actual interest crediting rate in an interest crediting period was equal to the rate of return on plan assets, but not greater than 5 percent, then for purposes of determining the plan's average interest crediting rate, the interest crediting rate for that interest crediting period would be deemed to equal the lesser of the applicable third segment rate for the period and 5 percent. However, if the actual interest crediting rate in an interest crediting period was equal to the rate of return on plan assets minus 200 basis points, then for purposes of determining the plan's average interest crediting rate, the interest crediting rate for that interest crediting period would be deemed to equal the third segment rate.

(iii) *Rules of application*—(A) *Section 411(d)(6) protected benefits.* In general, for purposes of determining the average interest crediting rate under paragraph (e)(2)(ii) of this section, the interest crediting rate that applied for each interest crediting period is the ongoing interest crediting rate that was specified under the plan in that period, without regard to any section 411(d)(6) protected benefit using an interest crediting rate that applied under the plan prior to amendment. However, if, at the end of the last interest crediting period prior to plan termination, the participant's accumulated benefit is based on a section 411(d)(6) protected benefit that results from a prior amendment to change the rate of interest crediting applicable under the plan, then, for purposes of determining the average interest crediting rate under paragraph (e)(2)(ii) of this section, the pre-amendment interest crediting rate is treated as having applied for each interest crediting period after the date of the interest crediting rate change.

(B) *Weighted averages.* If the plan determines the interest credit in any interest crediting period by applying different rates to different predetermined portions of the accumulated benefit under paragraph (d)(1)(vii) of this section, then, for purposes of determining the average interest crediting rate under paragraph (e)(2)(ii) of this section, the interest

crediting rate that applied for the interest crediting period is the weighted average of the relevant interest rates that apply, under the rules of paragraph (e)(2)(ii) of this section, to each portion of the accumulated benefit.

(C) *Participants with less than five years of interest credits upon plan termination.* If the plan provided for interest credits for any interest crediting period in which, pursuant to the terms of the plan, the individual was not eligible to receive interest credits (because the individual was not a participant or beneficiary in the relevant interest crediting period or otherwise), then, for purposes of determining the individual's average interest crediting rate under paragraph (e)(2)(ii) of this section, the individual is treated as though the individual received interest credits in that period using the interest crediting rate that applied in that period under the terms of the plan to a similarly situated participant or beneficiary who was eligible to receive interest credits. However, if, under the terms of the plan, the individual was not eligible to receive any interest credits during the entire 5-year period ending on the plan termination date, then the rules under paragraph (e)(2)(ii) do not apply to determine the individual's benefit after plan termination.

(iv) *Examples.* The following examples illustrate the rules of this paragraph (e)(2). In each case, it is assumed that the plan is terminated in a standard termination.

Example 1. (i) *Facts.* Plan A is a defined benefit plan with a calendar plan year that expresses each participant's accumulated benefit in the form of a hypothetical account balance to which principal credits are made at the end of each calendar quarter and to which interest is credited at the end of each calendar quarter based on the balance at the beginning of the quarter. Interest credits under Plan A are based on a rate of interest fixed at the beginning of each plan year equal to the third segment rate for the preceding December, except that the plan used the rate of interest on 30-year Treasury bonds (instead of the third segment rate) for plan years before 2012. The plan is terminated on March 3, 2016. The third segment rate credited under Plan A from January 1, 2012, through December 31, 2015, is assumed to be: 6 percent annually for each of the four quarters in 2015 (1.5 percent quarterly); 6.5 percent annually for each of the four quarters in 2014 (1.625 percent quarterly); 6 percent annually for each of the four quarters in 2013 (1.5 percent quarterly); and 5.5 percent annually for each of the four quarters in 2012 (1.375 percent quarterly). The rate of interest on 30-year Treasury bonds credited under Plan A for each of the four quarters in 2011 is assumed to be 4.4 percent annually (1.1 percent quarterly).

(ii) *Conclusion.* Pursuant to paragraph (e)(2)(ii)(B) of this section, the interest crediting rate used to determine accrued benefits under the plan on and after the date of plan termination is 5.68 percent. This is determined by calculating the average quarterly rate of 1.42 percent (the sum of 1.5 percent times 4, 1.625 times 4, 1.5 times 4, 1.375 times 4, and 1.1 percent times 4, divided by the 20 quarters that end in the 5-year period from March 4, 2011 to March 3, 2016) and multiplying such rate by 4 to determine the average annual rate.

Example 2. (i) Facts. The facts are the same as Example 1, except that Participant B commenced participation in Plan A on April 17, 2013.

(ii) *Conclusion.* Pursuant to paragraph (e)(2)(iii)(C) of this section, the interest crediting rate used to determine Participant B's accrued benefits under Plan A on and after the date of plan termination is 5.68 percent, which is the same rate that would have applied to Participant B if Participant B had participated in the plan during the 5-year period preceding the date of plan termination, as described in *Example 1.*

Example 3. (i) *Facts.* Plan C is a defined benefit plan with a calendar plan year that expresses each participant's accumulated benefit in the form of a hypothetical account balance to which principal credits are made at the end of each calendar year and to which interest is credited at the end of each calendar year based on the balance at the end of the preceding year. The plan is terminated on January 27, 2014. The plan's interest crediting rate for each calendar year during the entire 5-year period ending on the plan termination date is equal to (A) 50 percent of the greater of the rate of interest on 3-month Treasury Bills for the preceding December and an annual rate of 4 percent, plus (B) 50 percent of the rate of return on plan assets. The rate of interest on 3-month Treasury Bills credited under Plan C is assumed to be: 3.4 percent for 2013; 4 percent for 2012; 4.5 percent for 2011; 3.5 percent for 2010; and 4.2 percent for 2009. Each of these rates applied under Plan C for interest credited during this period for purposes of the interest credits described in clause (A) of this paragraph (i), except that the 4 percent minimum rate applied for 2013 and 2010. For purposes of the interest credits described in clause (B) of this paragraph (i), the rate of interest on the third segment rate in the prior years (based on the rate for the preceding December) is assumed to be: 6 percent for 2013; 6.5 percent for 2012; 6 percent for 2011; 5.5 percent for 2010; and 6 percent for 2009.

(ii) *Conclusion.* Pursuant to paragraph (e)(2)(ii) of this section, the interest crediting rate used to determine accrued benefits under the plan on and after the date of plan termination is 5.07 percent. This number is equal to the sum of 50 percent of 4.14 percent (which is the sum of 4 percent, 4 percent, 4.5 percent, 4 percent, and 4.2 percent, divided by 5), and 50 percent of 6 percent (which is the average third segment rate for the 5 interest crediting periods ending within the 5-year period).

Example 4. (i) *Facts.* The facts are the same as in *Example 3,* except that the plan had credited interest before January 1, 2012, using the rate of return on a RIC and was amended effective January 1, 2012, to base interest credits for all plan years after 2011 on the interest rate formula described in *Example 3*(i). In order to comply with section 411(d)(6), the plan provides that, for each participant or beneficiary who was a participant on December 31, 2011, the benefits at any date are based on either the ongoing hypothetical account balance on that date (which is based on the December 31, 2011 balance, with interest credited thereafter at the rate described in the first sentence of *Example 3*(i) and taking principal credits after 2011 into account) or a special hypothetical account balance (the pre-2012 balance) on that date, whichever balance is greater. For each participant, the pre-2012 balance is a hypothetical account balance equal to the participant's December 31, 2011, balance, with interest credited thereafter at the RIC rate of return, but with no principal credits after 2011. There are 10 participants for whom his or her pre-2012 balance exceeded his or her ongoing hypothetical account balance at the end of 2013.

(ii) *Conclusion.* Since Plan C credited interest prior to 2012 using the rate of return on a RIC (a rate not described in paragraph (d)(3) or (d)(4) of this section), for purposes of determining the average interest crediting rate upon plan termination, the interest crediting rate used to determine accrued benefits under Plan C for all participants during those periods (for the calendar years 2009, 2010, and 2011) is deemed to be equal to the third segment rate for the preceding December. In addition, since the pre-2012 balances exceeded the ongoing hypothetical account balance for 10 participants in the last interest crediting period prior to plan termination, for purposes of determining the average interest crediting rate upon plan termination, the interest crediting rate used to determine accrued benefits under Plan C for 2012 and 2013 for those participants is deemed to be equal to the third segment rate for the month of December preceding 2012 and the month of December preceding 2013, respectively. For all other participants, for purposes of determining the average interest crediting rate upon plan termination, the interest crediting rate used to determine accrued benefits under Plan C for 2012 and 2013 is based on the ongoing interest crediting rate (the formula described in *Example 3*).

(3) * * *

(iii) *Coordination of section 411(d)(6) and market rate of return limitation*—(A) *In general.* An amendment to a statutory hybrid plan that preserves a section 411(d)(6) protected benefit is subject to the rules under paragraph (d) of this section relating to market rate of return. However, in the case of an amendment to change a plan's interest crediting rate for periods after the applicable amendment date from one interest crediting rate (the old rate) that satisfies the requirements of paragraph

(d) of this section to another interest crediting rate (the new rate) that satisfies the requirements of paragraph (d) of this section, the plan's effective interest crediting rate is not in excess of a market rate of return for purposes of paragraph (d) of this section merely because the plan provides for the benefit of any participant who is benefiting under the plan (within the meaning of § 1.410(b)–3(a)) on the applicable amendment date to never be less than what it would be if the old rate had continued but without taking into account any principal credits (as defined in paragraph (d)(1)(ii)(D) of this section) after the applicable amendment date.

(B) *Multiple amendments.* A pattern of repeated plan amendments each of which provides for a prospective change in the plan's interest crediting rate with respect to the benefit as of the applicable amendment date will be treated as resulting in the ongoing plan terms providing that the interest crediting rate equals the greater of each of the interest crediting rates, so that the rule in paragraph (e)(3)(iii)(A) of this section would not apply. See § 1.411(d)–4, A–1(c)(1).

(4) *Actuarial increases after normal retirement age.* A statutory hybrid plan is not treated as providing an effective interest crediting rate that is in excess of a market rate of return for purposes of paragraph (d) of this section merely because the plan provides that the participant's benefit, as of each annuity starting date after normal retirement age, is equal to the greater of—

(i) The benefit determined using an interest crediting rate that is not in excess of a market rate of return under paragraph (d) of this section; and

(ii) The benefit that satisfies the requirements of section 411(a)(2).

* * * * *

(f) * * *

(2) * * *

(i) * * *

(B) *Special effective date.* Paragraphs (c)(3)(iii), (d)(1)(iii), (d)(1)(iv)(D), (d)(1)(vi), (d)(2)(ii), (d)(4)(iv), (d)(5)(iv), (d)(6), (e)(2), (e)(3)(iii), and (e)(4) of this section apply to plan years that begin on or after January 1, 2012.

* * * * *

Steven T. Miller,

Deputy Commissioner for Services and Enforcement.

[FR Doc. 2010–25942 Filed 10–18–10; 8:45 am]

BILLING CODE 4830–01–P

DEPARTMENT OF LABOR

Occupational Safety and Health Administration

[Docket No. OSHA–2010–0032]

29 CFR Parts 1910 and 1926

Interpretation of OSHA's Provisions for Feasible Administrative or Engineering Controls of Occupational Noise

AGENCY: Occupational Safety and Health Administration (OSHA)

ACTION: Proposed interpretation.

SUMMARY: This document constitutes OSHA's official interpretation of the term *feasible administrative or engineering controls* as used in the applicable sections of OSHA's General Industry and Construction Occupational Noise Exposure standards. Under the standard, employers must use administrative or engineering controls rather than personal protective equipment (PPE) to reduce noise exposures that are above acceptable levels when such controls are feasible. OSHA proposes to clarify that *feasible* as used in the standard has its ordinary meaning of capable of being done. The Agency intends to revise its current enforcement policy to reflect this interpretation. The Agency solicits comments from interested parties on this interpretation.

DATES: Submit comments on or before December 20, 2010.

ADDRESSES: You may submit comments by any of the following methods:

Electronically: You may submit comments and attachments electronically at *http://www.regulations.gov,* the Federal eRulemaking Portal. Follow the instructions online for making electronic submissions;

Fax: You may fax submissions not longer than 10 pages, including attachments, to the OSHA Docket Office at 202–693–1648.

Mail, hand delivery, express mail, messenger and courier service: If you use this option, you must submit three copies of your comments and attachments to the OSHA Docket Office, Docket No. OSHA–2010–0032, U.S. Department of Labor, Room N–2625, 200 Constitution Avenue, NW., Washington, DC 20210. Deliveries (hand, express mail, messenger and courier service) are accepted from 8:15 a.m.–4:45 p.m., e.t.

Instructions: All submissions must include the agency name and the OSHA docket number for this interpretation (OSHA–2010–0032). Submissions are placed in the public docket without change and may be accessed online *http://www.regulations.gov.* Be careful about submitting personal information such as social security numbers and birth dates.

Docket: To read or download submissions or other material in the docket, go to *http://www.regulations.gov* or the OSHA Docket Office at the address above. All documents in the docket are listed in the *http://www.regulations.gov* index; some information (*e.g.,* copyrighted material), however, can not be read or downloaded at the website. All submissions, including copyrighted material, can be examined or copied at the OSHA Docket Office.

FOR FURTHER INFORMATION CONTACT: *General information or press inquiries:* MaryAnn Garrahan, Acting Director, Office of Communications, Room N–3647, OSHA, U.S. Department of Labor, 200 Constitution Avenue, NW., Washington, DC 20210; telephone 202–693–1999.

For Technical Inquiries: Audrey Profitt, Senior Industrial Hygienist, Directorate of Enforcement Programs, Room N–3119, OSHA, U.S. Department of Labor, 200 Constitution Avenue, NW., Washington, DC 20210; telephone: 202–693–2190, or fax: 202–693–1681.

SUPPLEMENTARY INFORMATION: This **Federal Register** document sets out OSHA's proposed interpretation of *feasible administrative or engineering controls* in 29 CFR 1910.95(b)(1) and 1926.52(b) for the purpose of enforcing compliance with these standards. This document does not address feasibility in any other context. Sections 1910.95(b)(1) and 1926.52(b), which are substantively identical, require that when employees are exposed to sound exceeding the permissible level, feasible administrative or engineering controls must be utilized to reduce the sound to within that level, and if such controls are ineffective, personal protective equipment must be provided and used. *Feasibility* encompasses both economic and technological considerations, but this document addresses only economic feasibility. Under OSHA's current enforcement policy, the agency issues citations for failure to use engineering and administrative controls only when hearing protectors are ineffective or the costs of such controls are *less* than the cost of an effective hearing conservation program.

As discussed below, this policy is contrary to the plain meaning of the standard and thwarts the safety and health purposes of the OSH Act by rarely requiring administrative and engineering controls even though these

controls are affordable and generally more effective than hearing protectors in reducing noise exposure. Accordingly, OSHA now proposes to consider administrative or engineering controls economically feasible when the cost of implementing such controls will not threaten the employer's ability to remain in business, or if such a threat to viability results from the employer's failure to meet industry safety and health standards.

I. Regulatory Background

Section 6(a) of the OSH Act required the Secretary, during the two-year period following the Act's effective date, to promulgate as an OSHA standard any national consensus standard and established Federal standard unless she determined that the promulgation of such a standard would not result in improved safety or health. 29 U.S.C. 655(a). Pursuant to section 6(a), OSHA promulgated the general industry noise standard as an "established federal standard" in 1971. 36 FR 10466, 10518, May 29, 1971 (codified as § 1910.95). Section 1910.95(b)(1) is derived from 41 CFR 50–204.10, an occupational noise exposure standard promulgated under the Walsh-Healey Government Contracts Act, 41 U.S.C. 35–45, which requires that federal government contracts for materials over $10,000 must provide that the work be done under sanitary and safe working conditions, 41 U.S.C. 35(d). The requirements of the Walsh-Healey Act noise standard are the same as those of the OSH Act noise standard. *Compare* 41 CFR 50–204.10(b) *with* 29 CFR 1910.95(b)(1).

Section 1910.95(b)(1) states as follows:

> When employees are subjected to sound exceeding those listed in Table G–16, feasible administrative or engineering controls shall be utilized. If such controls fail to reduce sound levels within the levels of Table G–16, personal protective equipment shall be provided and used to reduce sound levels within the levels of the table.

§ 1910.95(b)(1).

OSHA also promulgated the construction noise standard, originally codified at 29 CFR 1518.52, as an "established federal standard" in 1971. 36 FR 10466, 10469, May 29, 1971. Before being adopted unchanged as an OSH Act standard, section 1518.52(b) was issued under the Construction Safety Act, 40 U.S.C. 333 (1969), which requires that federal construction contracts for over $100,000 must provide that the work be done under sanitary and safe working conditions. 40 U.S.C. 3704(a)(1) (formerly cited as 40 U.S.C. 333(a)(1)); 36 FR 7340, 7348, April 17, 1971. At the end of 1971, § 1518.52(b) was redesignated as § 1926.52(b), 36 FR 25232, Dec. 30, 1971, its current codification.

Section 1926.52(b) is almost verbatim identical to § 1910.95(b)(1) and provides:

> When employees are subjected to sound exceeding those listed in Table D–2 of this section, feasible administrative or engineering controls shall be utilized. If such controls fail to reduce sound levels within the levels of the table, personal protective equipment as required in subpart E, shall be provided and used to reduce sound levels within the levels of the table.

§ 1926.52(b).[1]

Engineering controls involve modifications to plant, equipment, processes or materials that reduce the sound intensity at the source, by substituting quieter machines and processes, or by isolating the machine or its operator. See *Forging Indus. Ass'n* v. *Secretary of Labor,* 773 F.2d 1436, 1440 n.3 (4th Cir. 1985) (*en banc*); *Donovan* v. *Castle & Cooke Foods,* 692 F.2d 641, 643 n.2 (9th Cir. 1982). *Administrative controls* involve modifications of work assignments to reduce employees' exposure to noise, such as rotating employees so that they work in noisy areas for a short time. *Forging Indus.,* 773 F.2d at 1440 n.3. *Personal protective equipment* (PPE) includes hearing protectors such as ear plugs and ear muffs fitted to individual employees. *Castle & Cooke,* 692 F.2d at 643 n.2.

II. Interpretive History of Economically Feasible Administrative or Engineering Controls

A. Current Enforcement Policy

OSHA's early interpretive guidance on 29 CFR 1910.95(b)(1) indicated that feasible engineering or administrative controls must be used to reduce noise to acceptable levels and that PPE must be used as a supplement when such controls are not completely effective in achieving this objective. Letter from Barry J. White, OSHA Assistant Secretary for Regional Programs, to Leslie Anderson (March 19, 1975). In the following decade, OSHA issued citations to employers for failure to use affordable engineering and administrative controls to reduce noise levels. The Occupational Safety and Health Review Commission issued a series of decisions swinging back and forth between a cost-benefit interpretation of economically *feasible* controls and a broader, plain-meaning definition of the term as "capable of being done." The Commission ultimately settled on the cost-benefit interpretation.[2] Although OSHA has not changed its interpretation of the standard, its enforcement policy since 1983 has allowed employers to rely on a hearing conservation program based on PPE if such a program reduces noise exposures to acceptable levels and is less costly than administrative and engineering controls. The development of the case law in this area is described below.[3]

B. Commission and Court of Appeals Interpretations of Feasible

The Commission first addressed section 1910.95(b)(1) in *Continental Can Co.,* 4 BNA OSHC 1541, 1547 (Nos. 3973, 4397, 4501, 4853, 5327, 7122, 7910 & 7920, 1976). There, the Commission rejected the Secretary's argument that the costs of noise-reducing engineering controls are not relevant unless they would seriously jeopardize the financial health of the company. The Commission held that, in determining whether controls are economically feasible, all the relevant costs and benefit factors must be weighed. *Ibid.* The Commission refined this cost-benefit interpretation in *Castle & Cooke Foods,* 5 BNA OSHC 1435, 1438 (No. 10925, 1977), *aff'd,* 692 F.2d 641 (9th Cir. 1982), holding that engineering controls are economically feasible only if the health benefits to employees from noise reduction justify the cost to the employer. Applying this test, the Commission found that, although engineering controls would reduce ambient noise in Castle & Cooke's plants to within the limits of Table G–16, the hearing loss avoided by such a reduction would not be life-threatening or, in most cases, seriously debilitating. *Id.* at 1440. Rejecting the Secretary's position that engineering controls were affordable, that the health benefits of such controls would be significant, and that hearing protectors were less effective, the Commission concluded that the health benefits did not justify the cost of implementing engineering controls. *Ibid.* The Secretary

[1] Table D–2 of § 1926.52(b) is identical to Table G–16 of § 1910.95(b)(1).

[2] To an economist, cost-benefit analysis contemplates an actual quantitative comparison of costs and benefits, typically through the conversion of all benefits and costs to monetary values. In the *Castle & Cooke Foods* case, discussed below, the Commission found that the health benefits of engineering controls did not justify their costs without monetizing the benefits and without explaining its valuation method. Although this approach would not constitute cost-benefit analysis in the sense used by economists, this document will refer to it as a cost-benefit test because that is the terminology used by the Commission.

[3] OSHA has not interpreted, and the Commission has not construed, the virtually identical language of § 1926.52(b).

appealed *Castle & Cooke* to the Ninth Circuit, and while that case was pending, the Supreme Court decided *American Textile Mfgs. Institute, Inc.* v. *Donovan* (*ATM*), 452 U.S. 490, 508–11 (1981). In *ATMI,* the Court held that *feasible* in section 6(b)(5) of the OSH Act, which requires that the Secretary promulgate standards for toxic substances at the most protective level, "to the extent feasible," means "capable of being done," and therefore rules out balancing costs and benefits. *ATMI,* 452 U.S. at 508–09. The Ninth Circuit rejected the Secretary's argument that the Supreme Court's interpretation of *feasible* in section 6(b)(5) was controlling as to the meaning of the same term in § 1910.95(b)(1). Believing itself bound to defer to the Commission's expertise in interpreting the standard, the Ninth Circuit distinguished *ATMI* on the ground that the Court's holding was limited to section 6(b)(5) standards and left open whether the general requirement in section 3(8) of the Act that OSHA standards be "reasonably necessary" might support cost-benefit analysis for standards issued under provisions other than section 6(b)(5).[4] *Donovan* v. *Castle & Cooke Foods,* 692 F.2d 641, 648–49 (9th Cir. 1982). On this basis, the Ninth Circuit concluded that the Commission was "free to exercise its authority to interpret the [standard]" and the Commission's cost-benefit interpretation was neither unreasonable nor arbitrary. *Id.* at 649

In December 1982, a month after the Ninth Circuit affirmed *Castle & Cooke,* the Commission reinterpreted the word *feasible* in section 1910.95(b)(1) in light of *ATMI. Sun Ship, Inc.,* 11 BNA OSHC 1028 (No. 16118, 1982). Rejecting the Ninth Circuit's analysis as "divergent," two Commissioners agreed that the Supreme Court's interpretation of *feasible* in section 6(b)(5) controls the meaning of the same term in the noise standard, and precludes balancing the health benefits of engineering controls against their costs. *Sun Ship,* 11 BNA OSHC at 1031–32. Administrative and engineering controls are economically feasible, the Commission held, if their cost does not threaten the cited employer's long-term profitability and competitiveness, or if the employer's inability to afford these controls results from having lagged behind the industry in providing safety or health protection for employees. *Id.* at 1033. Chairman Rowland dissented, arguing that the fact that the Commission had previously been unable to agree on the meaning of *feasible,* indicated that § 1910.95(b)(1) lacked ascertainable criteria for its enforcement and was therefore unenforceable as written. *Id.* at 1037–43.

In 1984, the Commission overruled *Sun Ship* in a split decision in which the two majority commissioners presented different rationales. *Sherwin-Williams Co.,* 11 BNA OSHC 2105, 2110–11 (No. 14131, 1984). In the majority opinion, Commissioner Buckley resurrected the Ninth Circuit's *Castle & Cooke* analysis that the majority in *Sun Ship* had expressly rejected. Citing the Ninth Circuit's holding that the Commission was not required by *ATMI* to abandon cost-benefit analysis under § 1910.95(b)(1), and the fact that the Secretary had revised her enforcement policy in 1983 to accept a cost-benefit approach, Commissioner Buckley concluded that *Sun Ship* should be reexamined. *Sherwin-Williams Co.,* 11 BNA OSHC at 2108–09. He also found that it was reasonable to believe that the government contractors bidding on Walsh-Healey Act contracts would have understood "feasible administrative and engineering controls" to mean those controls that were practical and cost-effective. *Id.* at 2110. For these reasons, Commissioner Buckley concluded that cost-benefit analysis was incorporated into the noise standard upon its adoption under section 6(a) of the OSH Act. *Ibid.* Under this approach, if the employer produces evidence of the cost of controls, the Secretary must prove that "the benefit of the proposed engineering controls justifies their relative cost in comparison to other abatement methods." *Ibid.*

Chairman Rowland concurred in overruling *Sun Ship,* but for a different reason. Chairman Rowland restated the position he had taken in his dissent in *Sun Ship* that § 1910.95(b)(1) was unenforceable as written because it provided no ascertainable criteria for determining what administrative and engineering controls were "feasible" and impermissibly delegated authority to the Commission to decide what the standard meant. *Sherwin-Williams,* 11 BNA OSHC at 2111 (Rowland, Ch., concurring). Chairman Rowland noted, however, that absent agreement by two commissioners on the standard's interpretation, the parties and administrative law judges would have no clear guidance on what principles to apply. *Ibid.* He concluded that "as between the test set forth in *Sun Ship* and the cost-benefit approach adopted by Commissioner Buckley, I believe the later test represents the more reasoned result." *Ibid.* Thus Chairman Rowland joined in adopting Commissioner Buckley's cost-benefit test for determining the feasibility of engineering controls. *Id.* at 2112.

Commissioner Cleary dissented, finding no grounds to overrule *Sun Ship. Sherwin-Williams,* 11 BNA OSHC at 2112–14 (Cleary, C., dissenting). He argued that the Court in *ATMI* determined that the plain meaning of *feasible* is "capable of being done," and that the term therefore cannot be understood to incorporate a cost-benefit analysis. *Id.* at 2112. The fact that *ATMI* dealt with section 6(b)(5), rather than section 6(a), of the OSH Act was unimportant, in Commissioner Cleary's view, because there is nothing in the Act to support giving the term *feasible* in the noise standard anything other than its plain, ordinary meaning. *Id.* at 2112–13. He also noted that acceptance of the majority's cost-benefit approach would virtually eliminate engineering controls from the noise standard since earplugs or earmuffs will almost always cost less than effective engineering controls. *Id.* at 2113–14. In Commissioner Cleary's view, the majority's adoption of a cost-benefit test amounted to an unauthorized amendment of the standard. *Id.* at 2114.

In response to the Ninth Circuit's *Castle & Cooke* decision, OSHA adopted enforcement guidelines allowing employers to use PPE and a hearing conservation program, rather than engineering or administrative controls, when hearing protectors are less costly than such controls, unless noise levels are especially elevated CPL 2–2.35A, § G (Dec. 19, 1983). A hearing conservation program is one that meets the standard's requirements for protecting employees from the harmful effects of noise at or above 85 decibels. See § 1910.95(c)–(o); *Forging Indus.,* 773 F.2d at 1440. Such a program includes monitoring, periodic audiometric testing, provision of hearing protectors, training and other elements. *Forging Indus.,* 773 F.2d at 1440–41.

OSHA's enforcement policy as set forth in the Field Operations Manual (FOM) authorizes citing employers for failing to use engineering and/or administrative controls only when (1) noise levels are so high—said to border on 100 dBA when the most effective hearing protectors are used—that hearing protectors alone will not reliably reduce noise to acceptable levels; or (2) the costs of such controls are less than the cost of an effective hearing conservation program. FOM, CPL 02–00–148, Chapt. 4 § XI.B.1 (Nov.

[4] Section 3(8) of the Act defines an *occupational safety and health standard* as one "which requires conditions, or the adoption or use of one or more practices, means, methods, operations or processes reasonably necessary or appropriate to provide safe or healthful employment and places of employment." 29 U.S.C. 652(8).

9, 2009). Since effective engineering and administrative controls almost always cost more than a hearing conservation program based on hearing protectors, citations are rarely issued for failure to use such controls under OSHA's current policy.

III. OSHA's Interpretation of Economic Feasibility in 29 CFR 1910.95(b)(1) and 1926.52(b)

The legal landscape concerning the interpretation of § 1910.95(b)(1) (and therefore of the substantively identical § 1926.52(b)) has dramatically changed since the Ninth Circuit's *Castle & Cooke,* and the Commission's *Sherwin-Williams* decisions. In *Martin* v. *OSHRC* (*CF & I*), 499 U.S. 144, 150–55 (1991), the Supreme Court established that the Secretary is the administrative actor responsible for issuing authoritative interpretations of OSHA standards, while the Commission's role, as neutral arbiter, is to determine whether the Secretary's interpretation is reasonable. The Commission is not, as the Ninth Circuit believed, free to exercise de novo authority to interpret a standard, and a court of appeals is to defer to the Secretary's interpretation if reasonable, not the Commission's. Although OSHA has for some time acquiesced as a matter of enforcement policy in the Commission's cost-benefit test for determining the economic feasibility of administrative and engineering controls under the noise standards, the agency has decided that this approach is inconsistent with the standards. For the reasons stated below, OSHA has concluded that engaging in cost-benefit analysis under §§ 1910.95(b)(1) and 1926.52(b) is contrary to the plain meaning of *feasibility* and thwarts the safety and health purposes of the OSH Act and the standard. Therefore, OSHA proposes to consider administrative or engineering controls economically feasible under the noise standards when the cost of these controls will not threaten the cited employer's ability to stay in business or when the threat to viability results from the employer's having lagged behind the industry in providing safety and health protection for employees.

The language of the noise standards frames the analysis. The Supreme Court has held that the word *feasible* has the plain meaning of "capable of being done" and does not permit cost-benefit analysis. The noise standards require that "feasible administrative or engineering controls" be utilized when noise is excessive. In *ATMI,* the Supreme Court considered the meaning of the word *feasible* in the context of section 6(b)(5) of the OSH Act, 29 U.S.C. 655(b)(5), which requires that the Secretary set standards for toxic substances at the level which most adequately assures, "to the extent feasible," that no employee will suffer material impairment of health. The Court found that the plain meaning of *feasible* is "capable of being done;" "[t]hus, § 6(b)(5) directs the Secretary to issue the standard that 'most adequately assures * * * that no employee will suffer material impairment of health,' limited only by the extent to which this is 'capable of being done.' " *ATMI,* 452 U.S. at 508–09. The Court further concluded that Congress's use of the word *feasible* in section 6(b)(5) "defined the basic relationship between costs and benefits, by placing the 'benefit' of worker health above all other considerations save those making attainment of this 'benefit' unachievable." *Id.* at 509. Thus, the feasibility analysis required by section 6(b)(5) necessarily rules out a balancing of costs and benefits. "[C]ost-benefit analysis by OSHA is not required by the statute because feasibility analysis is." *Ibid.*

The Court's analysis in *ATMI* governs the interpretation of §§ 1910.95(b)(1) and 1926.52(b). By requiring *feasible administrative or engineering controls* to be utilized when noise levels exceed those specified in Table G–16, the standard directs employers to use those controls capable of reducing exposures. The cost of such controls is relevant only to the extent that it is so high as to threaten the employer's ability to stay in business. This construction is supported not only by the plain meaning of *feasible,* but also by the canon of construction that regulatory language should be given the same meaning as the same language appearing in the statute. *See Sun Ship,* 11 BNA OSHC at 1032.

The 1984 *Sherwin-Williams* decision adopting a cost-benefit requirement for the general industry noise standard despite *ATMI* is plainly wrong and cannot stand. The Commission was unable to agree on a rationale for overruling *Sun Ship,* in which the majority had held that the Supreme Court's interpretation of *feasible* in section 6(b)(5) controlled the meaning of same term in § 1910.95(b)(1). Moreover, neither Commissioner Buckley's majority opinion nor Chairman Rowland's separate concurrence is persuasive.

Commissioner Buckley identified two factors which he believed supported rejecting the plain meaning of "feasible" in favor of a cost-benefit approach. The first factor, taken from the Ninth Circuit's *Castle & Cooke* decision, is that *ATMI* did not address whether section 3(8) of the OSH Act, which defines an occupational safety or health standard, in part, as one requiring "reasonably necessary" measures, requires a cost-benefit analysis for standards issued under provisions other than section 6(b)(5). The Ninth Circuit inferred from the Court's failure to address this issue that *ATMI* did not require the Commission to abandon a cost-benefit approach to a noise standard issued under section 6(a). *Donovan* v. *Castle & Cooke Foods,* 692 F.2d at 649. The Ninth Circuit's reasoning, however, is seriously flawed.

As a threshold matter, the Secretary has rejected the notion that section 3(8)'s "reasonably necessary" language imposes a requirement for cost-benefit analysis even for standards not subject to section 6(b)(5)'s feasibility constraint. In response to litigation arising under the lockout/tagout standard, the Secretary concluded that section 3(8) does not require a formal cost-benefit analysis—in which all the costs and benefits of a particular action are identified, quantified and compared—for safety standards, which are issued under section 6(b) but are not subject to section 6(b)(5). 58 FR 16612, 16622, Mar. 30, 1993 (Supplemental Statement of Reasons); *International Union, United Automobile, Aerospace & Agricultural Implement Workers of America, UAW* v. *OSHA,* 37 F.3d 665, 669–70 (D.C. Cir. 1994). The Secretary's interpretation of section 3(8), as published in her **Federal Register** supplemental statement, is entitled to deference as long as it is reasonable. *United States* v. *Mead Corp.,* 553 U.S. 218, 226–27 (2001).

Moreover, cost-benefit analysis is inconsistent with the text of § 1910.95(b)(1). Section 6(a) required the Secretary to promulgate the existing Walsh-Healey noise standard as an OSHA standard unless it would not result in improved safety or health. OSH Act, 29 U.S.C. 655(a). The statutorily mandated standard requires *feasible* controls to be used to reduce exposure. To read section 3(8) as imposing a requirement that controls be used only if the benefits justify the cost would eviscerate the *feasible* controls requirement that section 6(a) required the Secretary to promulgate. The standard makes administrative and engineering controls the primary means of compliance; only if such controls are *in*feasible, *i.e.,* so costly as to imperil the employer's long-term viability, may employers use hearing protectors. Section 1910.95(b)(1); *Forging Indus.,* 773 F.2d at 1440.

Yet the Commission's cost-benefit approach completely reverses this

priority; hearing protectors may be used unless they cost more than the engineering controls necessary to achieve an equivalent noise reduction. *Castle & Cooke,* 5 BNA OSHC at 1441. Under the Commission's interpretation, hearing protectors are presumptively appropriate, even if administrative and engineering controls are affordable and effective. Just as Congress could not have intended the general language of section 3(8) to countermand the specific feasibility requirement of section 6(b)(5), *ATMI,* 452 U.S. at 513, Congress could not have understood that section 3(8) would eviscerate the specific requirements of the existing federal standards that the Secretary was required by section 6(a) to adopt during the two-year period following the OSH Act's effective date. For § 1910.95(b)(1), no less than standards promulgated under section 6(b)(5), the term "feasible" defines "the basic relationship between costs and benefits by placing the 'benefit' of worker health above all other considerations save those making attainment of this 'benefit' unachievable * * *. Thus, cost-benefit analysis * * * is not required by the statute because feasibility analysis is." *ATMI,* 452 U.S. at 509.

The second factor identified by Commissioner Buckley for departing from the plain meaning of "feasible" in § 1910.95(b)(1) is even less persuasive. Although the Commissioner found no regulatory or adjudicative history indicating how the standard was interpreted under the Walsh-Healey Act, he assumed that government contractors bidding on Walsh-Healey Act contracts would not have construed the term "feasible" in accordance with the dictionary definition, but rather would have understood the term to allow for cost-benefit analysis. *Sherwin-Williams,* 11 BNA OSHC at 2109–10.

Commissioner Buckley's assumptions about the competitive bidding process under the Walsh-Healey Act are both irrelevant and unfounded. They are irrelevant because § 1910.95(b)(1), was promulgated under § 6(a) of the OSH Act as an "occupational safety and health standard." 29 U.S.C. 655(a). The Secretary is responsible for issuing authoritative interpretations of OSHA standards, and she is not bound by the perspective of a hypothetical government contractor bidding on a Walsh-Healey contract. *CF & I,* 499 U.S. at 150–55. The Secretary's interpretation of § 1910.95(b)(1) must be given effect if it is reasonable, "that is, so long as the interpretation sensibly conforms to the purpose and wording of the regulations." *Id.* at 150–51. Construing the standard to require that administrative or engineering controls be used as long as they do not threaten the employer's ability to stay in business is consistent with the standard's plain meaning and its purpose of protecting employee health by achieving reductions in noise exposure. It is the Secretary's reasonable construction of the standard, which constitutes an exercise of delegated law-making authority when embodied in an OSHA citation, that is entitled to deference, not the Commission's interpretation. *Id.* at 150–55. Speculation about how government contractors might have interpreted the standard in bidding on a Walsh-Healey contract is wholly irrelevant.

In any event, Commissioner Buckley's assumption as to how the "feasible" controls requirement would have been interpreted in the federal procurement context is entirely unfounded. First, as the commissioner himself admitted, there is nothing in the regulatory or adjudicatory history of the Walsh-Healey noise standard to support an assumption that *feasible* was not understood by government contractors to have its plain, ordinary meaning. Commissioner Buckley's interpretation thus violated the fundamental canon of construction that words are to be interpreted in accordance with their normal meaning unless there is specific evidence to the contrary. Furthermore, the notion that prospective contractors would have understood that they should include the costs of engineering controls only if they determined that the benefits outweighed the costs is completely contrary to basic principles of government procurement. *Sherwin-Williams,* 11 BNA OSHC at 2109–10. The competitive process requires that all prospective contractors bid on the same requirements; the process cannot possibly permit some bidders to decide for themselves whether engineering controls are required, or not required. Thus, *feasible* controls must have been understood—by both the government and its contractors—in accordance with its plain meaning.

OSHA's current enforcement policy on § 1910.95(b)(1) closely tracks the Commission's cost-benefit approach. Where PPE and a hearing conservation program are cheaper, the current enforcement policy allows employers to rely on them, rather than administrative or engineering controls, unless noise levels are so high that PPE will not reduce noise exposure to acceptable levels.[5] FOM, CPL 02–00–148, § XI.B. The policy provides, moreover, that PPE may be used up to 100 dBA. *Ibid.* As discussed above, this policy is inconsistent with the noise standards' explicit requirement that *feasible* administrative and engineering controls be used to reduce noise exposures to the level set by the standard and that PPE be used if administrative and engineering controls are unable to reduce noise to permitted levels. The standards' reliance on feasible engineering and administrative controls as the primary means of reducing noise exposures is consistent with OSHA's traditional adherence to a hierarchy of preferred controls, and is supported by good industrial hygiene practice and OSHA's experience in assuring that workers have a healthy workplace. *See, e.g.,* OSHA, 29 CFR parts 1915, 1917–18 & 1926, "Occupational Exposure to Hexavalent Chromium," Final Rule, 71 FR 10100, 10345, Feb. 28, 2006 (discussing methods of compliance for reducing exposures to hexavalent chromium). Hearing protectors are less reliable than administrative and engineering controls in reducing noise levels and maintaining such reductions over time. OSHA's current enforcement policy virtually eliminates the requirement to use administrative or engineering controls since such controls almost always cost more than hearing protectors. Furthermore, the current policy thwarts the safety and health purposes of the OSH Act by rarely requiring administrative and engineering controls even though these controls are generally more effective than hearing protectors in reducing noise exposure.

Accordingly, OSHA now proposes to interpret §§ 1910.95(b)(1) and 1926.52(b) in conformity with the plain meaning of these provisions and with the safety and health purposes of the OSH Act. OSHA proposes to interpret the term *feasible* in these provisions as having the same meaning that the term has in section 6(b)(5) of the Act, *i.e.,* "capable of being done," or "achievable." OSHA also proposes to consider administrative or engineering controls economically feasible if they will not threaten the employer's ability to remain in business or if the threat to viability results from the employer's having failed to keep up with industry safety and health standards. OSHA further intends to change its enforcement policy to authorize the issuance of citations requiring the use of administrative or engineering controls when these controls are feasible in

[5] In the terminology economists normally employ, the current enforcement policy would be better characterized as a least-cost, rather than a benefit-cost, approach.

accordance with this interpretation. OSHA welcomes comments from interested parties on this proposed interpretation.

Authority: 29 U.S.C. 655; 29 CFR 1910.95(b)(1) & 1926.52(b); Secretary's Order 5–200, 72 FR 31160, June 5, 2007.

Signed at Washington, DC, October 12, 2010.

David Michaels,

Assistant Secretary of Labor for Occupational Safety and Health.

[FR Doc. 2010–26135 Filed 10–18–10; 8:45 am]

BILLING CODE 4510–29–P

ENVIRONMENTAL PROTECTION AGENCY

40 CFR Part 49

[EPA–R09–OAR–2010–0683; FRL–9213–7]

Source Specific Federal Implementation Plan for Implementing Best Available Retrofit Technology for Four Corners Power Plant: Navajo Nation

AGENCY: Environmental Protection Agency (EPA).

ACTION: Proposed rule.

SUMMARY: The Environmental Protection Agency (EPA) is proposing to promulgate a source specific Federal Implementation Plan (FIP) requiring the Four Corners Power Plant (FCPP), located on the Navajo Nation, to achieve emissions reductions required by the Clean Air Act's Best Available Retrofit Technology (BART) provision. In this action, EPA is proposing to require FCPP to reduce emissions of oxides of nitrogen (NO_X) and particulate matter (PM). These pollutants are significant contributors to visibility impairment in the numerous mandatory Class I Federal areas surrounding FCPP. For NO_X emissions, EPA is proposing to require FCPP to meet an emission limit of 0.11 lb/MMBtu, representing an 80% reduction from current NO_X emissions. This NO_X limit is achievable by installing and operating Selective Catalytic Reduction (SCR) technology on Units 1–5. For PM, EPA is proposing to require FCPP to meet an emission limit of 0.012 lb/MMBtu for Units 1–3 and 0.015 lb/MMBtu for Units 4 and 5. These emissions limits are achievable by installing and operating any of several equivalent controls on Units 1–3, and through proper operation of the existing baghouse on Units 4 and 5. EPA is proposing to require FCPP to meet a 10% opacity limit on Units 1–5 to ensure proper operation of the PM controls. EPA is requesting comment on whether APS can satisfy BART on Units 1–3 by operating the existing venturi scrubbers to meet an emission limit of 0.03 lb/MMBtu with a 20% opacity limit. EPA is also proposing to require FCPP to comply with a 20% opacity limit on its coal and material handling operations.

DATES: Comments must be submitted no later than December 20, 2010.

ADDRESSES: Submit comments, identified by docket number EPA–R09–OAR–2010–0683, by one of the following methods:

Federal eRulemaking Portal: http://www.regulations.gov. Follow the on-line instructions.

E-mail: r9air_fcppbart@epa.gov.

Mail or deliver: Anita Lee (Air-3), U.S. Environmental Protection Agency Region IX, 75 Hawthorne Street, San Francisco, CA 94105–3901.

Instructions: All comments will be included in the public docket without change and may be made available online at *http://www.regulations.gov,* including any personal information provided, unless the comment includes Confidential Business Information (CBI) or other information whose disclosure is restricted by statute. Information that you consider CBI or otherwise protected should be clearly identified as such and should not be submitted through *http://www.regulations.gov* or e-mail. *http://www.regulations.gov* is an "anonymous access" system, and EPA will not know your identity or contact information unless you provide it in the body of your comment. If you send e-mail directly to EPA, your e-mail address will be automatically captured and included as part of the public comment. If EPA cannot read your comment due to technical difficulties and cannot contact you for clarification, EPA may not be able to consider your comment.

Hearings: EPA intends to hold public hearings in two locations in New Mexico to accept oral and written comments on the proposed rulemaking. EPA anticipates these hearings will occur in Shiprock and Farmington. EPA will provide notice and additional details at least 30 days prior to the hearings in the **Federal Register**, on our Web site, and in the docket.

Docket: The index to the docket for this action is available electronically at *http://www.regulations.gov* and in hard copy at EPA Region IX, 75 Hawthorne Street, San Francisco, California. While all documents in the docket are listed in the index, some information may be publicly available only at the hard copy location (*e.g.,* copyrighted material), and some may not be publicly available in either location (*e.g.,* CBI). To inspect the hard copy materials, please schedule an appointment during normal business hours with the contact listed in the **FOR FURTHER INFORMATION CONTACT** section.

FOR FURTHER INFORMATION CONTACT: Anita Lee, EPA Region IX, (415) 972–3958, *r9air_fcppbart@epa.gov.*

SUPPLEMENTARY INFORMATION: Throughout this document, "we", "us", and "our" refer to EPA.

Table of Contents

I. Background
A. Statutory and Regulatory Framework for Addressing Visibility
B. Statutory and Regulatory Framework for Addressing Sources Located in Indian Country
C. Statutory and Regulatory Framework for BART Determinations
D. Factual Background
1. Four Corners Power Plant
2. Relationship of NO_X and PM to Visibility Impairment
II. EPA's Proposed Action Based on Five Factors Test
A. A BART Determination for FCPP Is Necessary or Appropriate
B. Summary of Proposed BART Emission Limits
C. Available and Feasible Control Technologies and Five Factor Analysis for NO_X Emissions
i. Factor 1: Cost of Compliance
ii. Factor 2: Energy and Non-Air Quality Impacts
iii. Factor 3: Existing Controls at the Facility
iv. Factor 4: Remaining Useful Life of Facility
v. Factor 5: Degree of Visibility Improvement
D. Available and Feasible Control Technologies and Five Factor Analysis for PM Emissions
i. Factor 1: Cost of Compliance
ii. Factor 2: Energy and Non-Air Quality Impacts
iii. Factor 3: Existing Controls at the Facility
iv. Factor 4: Remaining Useful Life of Facility
v. Factor 5: Degree of Visibility Improvement
III. EPA's Proposed Action on Material Handling Limits
IV. Administrative Requirements
A. Executive Order 12866: Regulatory Planning and Review
B. Paperwork Reduction Act
C. Regulatory Flexibility Act
D. Unfunded Mandates Reform Act
E. Executive Order 13132: Federalism
F. Executive Order 13175: Consultation and Coordination With Indian Tribal Governments
G. Executive Order 13045: Protection of Children From Environmental Health Risks and Safety Risks
H. Executive Order 13211: Actions Concerning Regulations That Significantly Affect Energy Supply, Distribution, or Use

I. National Technology Transfer and Advancement Act
J. Executive Order 12898: Federal Actions To Address Environmental Justice in Minority Populations and Low-Income Populations

I. Background

A. Statutory and Regulatory Framework for Addressing Visibility

Part C, Subpart II, of the Act, establishes a visibility protection program that sets forth "as a national goal the prevention of any future, and the remedying of any existing, impairment of visibility in mandatory class I Federal areas which impairment results from manmade air pollution." 42 U.S.C. 7491A(a)(1). The terms "impairment of visibility" and "visibility impairment" are defined in the Act to include a reduction in visual range and atmospheric discoloration. *Id.* 7491A(g)(6). A fundamental requirement of the visibility protection program is for EPA, in consultation with the Secretary of the Interior, to promulgate a list of "mandatory Class I Federal areas" where visibility is an important value. *Id.* 7491A(a)(2). These areas include national wilderness areas and national parks greater than six thousand acres in size. *Id.* 7472(a).

On November 30, 1979, EPA identified 156 mandatory Class I Federal areas where visibility is an important value, including for example: Grand Canyon National Park in Arizona (40 CFR 81.403); Mesa Verde National Park and La Garita Wilderness Area in Colorado (*Id.* 81.406); Bandelier Wilderness Area in New Mexico (*Id.* 81.421); and Arches, Bryce Canyon, Canyonlands and Capitol Reef National Parks in Utah (*Id.* 81.430). These mandatory Class I Federal areas are within an approximately 300 km (or 186 mile) radius of FCPP.

On December 2, 1980, EPA promulgated the first phase of the required visibility regulations, codified at 40 CFR 51.300–307. 45 FR 80084. The 1980 regulations deferred regulating regional haze from multiple sources finding that the scientific data were inadequate at that time. *Id.* at 80086.

Congress added Section 169B to the Act in the 1990 CAA Amendments, requiring EPA to take further action to reduce visibility impairment in broad geographic regions. 42 U.S.C. 7492. In 1993, the National Academy of Sciences released a comprehensive study required by the 1990 Amendments concluding that "current scientific knowledge is adequate and control technologies are available for taking regulatory action to improve and protect visibility." *Protecting Visibility in National Parks and Wilderness Areas,* Committee on Haze in National Parks and Wilderness Areas, National Research Council, National Academy Press (1993).

EPA promulgated regulations to address regional haze on April 22, 1999. 64 FR 35765. Consistent with the statutory requirement in 42 U.S.C. 7491(b)(2)(a), EPA's 1999 regional haze regulations include a provision requiring States to require certain major stationary sources "in existence on August 7, 1977, but which ha[ve] not been in operation for more than fifteen years as of such date" which emit pollutants that are reasonably anticipated to cause or contribute to any visibility impairment to procure, install and operate BART. In determining BART, States are required to take into account five factors identified in the CAA and EPA's regulations. 42 U.S.C. 7491(g)(2) and 40 CFR 51.308.

B. Statutory and Regulatory Framework for Addressing Sources Located in Indian Country

When the Clean Air Act was amended in 1990, Congress included a new provision, Section 301(d), granting EPA authority to treat Tribes in the same manner as States where appropriate. See 40 U.S.C. 7601(d). Congress also recognized, however, that such treatment may not be appropriate for all purposes of the Act and that in some circumstances, it may be inappropriate to treat tribes identically to states. Therefore, Section 301(d)(2) of the Act directed EPA to promulgate regulations "specifying those provisions of [the CAA] for which it is appropriate to treat Indian tribes as States." *Id.* 7601(d)(2). In addition, Congress provided that "[i]n any case in which [EPA] determines that the treatment of Indian tribes as identical to States is inappropriate or administratively infeasible, the Administrator may provide, by regulation, other means by which the Administrator will directly administer such provisions so as to achieve the appropriate purpose." *Id.* 7601(d)(4).

In 1998, EPA promulgated regulations at 40 CFR part 49 (which have been referred to as the Tribal Authority Rule or TAR) relating to implementation of CAA programs in Indian Country. *See* 40 CFR part 49; *see* also 59 FR 43956 (Aug. 25, 1994) (proposed rule); 63 FR 7254 (Feb. 12, 1998) (final rule); *Arizona Public Service Company* v. *EPA,* 211 F.3d 1280 (DC Cir. 2000), *cert. den.,* 532 U.S. 970 (2001) (upholding the TAR). The TAR allows EPA to treat eligible Indian Tribes in the same manner as States "with respect to all provisions of the [CAA] and implementing regulations, except for those provisions [listed] in 49.4 and the [EPA] regulations that implement those provisions." 40 CFR 49.3. EPA recognized that Tribes were in the early stages of developing air planning programs known as Tribal Implementation Plans (TIPs) and that Tribes would need additional time to develop air quality programs. 62 FR 7264–65. Thus, EPA determined that it was not appropriate to treat Tribes in the same manner as States for purposes of those provisions of the CAA imposing air program submittal deadlines. *See* 59 FR at 43964–65; 63 FR at 7264–65. Similarly, EPA determined that it would be inappropriate to treat Tribes the same as States for purposes of the related CAA provisions establishing sanctions and federal oversight mechanisms where States fail to meet applicable air program submittal deadlines. *Id.* Thus, one of the CAA provisions that EPA determined was not appropriate to apply to Tribes is Section 110(c)(1). See 40 CFR 49.4(d). In particular, EPA found that it was inappropriate to impose on Tribes the provisions in Section 110(c)(1) for EPA to promulgate a FIP within 2 years after a State fails to make a required plan submission.

Although EPA determined that the requirements of CAA section 110(c)(1) were not applicable to Tribes, EPA also determined that under other provisions of the CAA it has the discretionary authority to promulgate "such federal implementation plan provisions as are necessary or appropriate to protect air quality" when a Tribe has not submitted a TIP. 40 CFR 49.11. EPA determined in promulgating the TAR that it could exercise discretionary authority to promulgate FIPs based on Section 301(a) of the CAA, which authorizes EPA to prescribe such regulations as are necessary to carry out the Act, and Section 301(d)(4), which authorizes EPA to directly administer CAA provisions for which EPA has determined it is inappropriate or infeasible to treat Tribes as identical to States. 40 CFR 49.11. *See* also 63 FR at 7265. Specifically, 40 CFR 49.11(a) provides that EPA shall promulgate without unreasonable delay such Federal implementation plan provisions as are necessary or appropriate to protect air quality, consistent with the provisions of sections 301(a) and 301(d)(4), if a tribe does not submit a tribal implementation plan or does not receive EPA approval of a submitted tribal implementation plan.

EPA has previously promulgated FIPs under the TAR to regulate air pollutants emitted from the two coal fired electric generating facilities on the Navajo

Nation, FCPP and Navajo Generating Station (NGS). In 1991, EPA also revised an existing FIP that applied to Arizona to include a requirement for NGS to substantially reduce its SO_2 emissions by installing scrubbers based on finding that the SO_2 emissions were contributing to visibility impairment at the Grand Canyon National Park. 56 FR 50172 (Oct. 3, 1991); *see also Central Arizona Water Conservation District* v. *United States Environmental Protection Agency,* 990 F.2d 1531 (9th Cir. 1993).

In 1999, after several years of negotiations, EPA proposed concurrent but separate FIPs for FCPP and NGS. Those FIPs proposed to fill the regulatory gap that existed because permits and SIP rules by New Mexico (for FCPP) and Arizona (for NGS) were not applicable or enforceable on the Navajo Nation, and the Tribe had not sought approval of a TIP covering the plants. 64 FR 48731 (Sept. 8, 1999).

Before EPA finalized the 1999 FIPs, the operator of FCPP began negotiations to reduce SO_2 emissions from FCPP by making upgrades to improve the efficiency of its SO_2 scrubbers. The negotiations resulted in an agreement for FCPP to increase the SO_2 control from a 72% reduction of the potential SO_2 emissions to an 88% reduction. As a result of this increased scrubber efficiency, FCPP's SO_2 emissions decreased by a total of 57% from the historical levels. The parties to the negotiations requested EPA to make those SO_2 reductions enforceable through a source specific FIP. Therefore, EPA proposed new FIPs for FCPP and NGS in September 2006. 71 FR 53631 (Sept. 12, 2006). In these concurrent but separate FIPs, EPA proposed to make emissions limits contained in State permits or rules that had previously been followed by FCPP and NGS federally enforceable. In addition, for FCPP, EPA proposed to establish a significantly lower SO_2 emissions limit based on the increased scrubber efficiency, resulting in a reduction of approximately 22,000 tons of SO_2 per year. EPA indicated in the final FIP for FCPP that the new SO_2 emissions limits were close to or the equivalent of the emissions reductions that would have been required in a BART determination. 72 FR 25698 (May 7, 2007). The FIP also required FCPP to comply with a 20% opacity limit on both the combustion and fugitive dust emissions coal handling operations. EPA finalized the FIP for FCPP in May 2007. Id.

APS, the operator of FCPP, and the Sierra Club each filed Petitions seeking judicial review of EPA's promulgation of the 2007 FIP for FCPP, on separate grounds. APS argued that EPA did not have authority to promulgate a source-specific FIP for FCPP without its consent. APS also argued that EPA did not have authority to promulgate a 20% opacity standard on the combustion equipment unless we provided an exemption for malfunctions. Finally, APS argued that EPA had not established an adequate basis for requiring a 20% opacity limit on the fugitive dust from the coal handling operations. In contrast, Sierra Club argued that EPA could not promulgate a "gap filling" FIP that did not include modeling and an analysis to show continued attainment of the NAAQS.

The Court of Appeals for the Tenth Circuit rejected both Petitions. With respect to the Sierra Club's arguments, the Court considered the regulatory language in 40 CFR 49.11(a) and concluded that "[t]his language does not impose upon the EPA the duty the Environmentalists propose. It provides the EPA discretion to determine what rulemaking is necessary or appropriate to protect air quality and requires the EPA to promulgate such rulemaking." *Arizona Public Service* v. *EPA,* 562 F.3d 1116, 1125 (10th Cir. 2009). The Court also rejected arguments by APS that EPA could not impose a continuous opacity limitation during operations, provided EPA set forth a reasonable basis for its decision. *Id.* at 1129 ("That APS does not agree with the EPA's rejection of the substance of its proposed 0.2% allowance is irrelevant; as long as EPA's decision making process may reasonably be discerned, we will not set aside the federal plan on account of a less-than-ideal explanation." [citation omitted]). The Court agreed with EPA's request for a voluntary remand of the opacity limit for the fugitive dust for the material handling operations and remanded that narrow aspect of the 2007 FIP. *Id.* at 1131.

The FIP that EPA is proposing today is promulgated under the same authority in 40 CFR 49.11(a). EPA is proposing to find that it is necessary or appropriate to establish BART requirements for NO_X and PM emissions from FCPP, and is proposing specific NO_X and PM limits as BART. EPA is proposing to establish a 10% opacity limit from Units 1–5 to ensure continuous compliance with the PM emissions limit. EPA is also proposing a 20% opacity limit to apply to FCPP's material handling operations in response to the remand from the 2007 FIP.

C. Statutory and Regulatory Framework for BART Determinations

When Congress enacted Section 169A of the CAA to protect visibility, it directed EPA to promulgate regulations that, inter alia, would require applicable implementation plans to include a determination of BART for certain major stationary sources. 42 U.S.C. 7491(b)(2)(A) & (g). These major stationary sources are fossil-fuel fired steam electric plants of more than 250 MMBtu/hr heat input, kraft pulp mills, Portland cement plants and other listed industrial sources that came into operation between 1962 and 1977 and are "reasonably anticipated to cause or contribute to any impairment of visibility in any [Class I area]." *Id.* EPA guidelines must be followed in making BART determinations for fossil fuel fired electric generating plants larger than 750 MW. *See* 40 CFR Part 51, Appendix Y.

FCPP and NGS are the only eligible BART sources located on the Navajo Nation. *See* Western Regional Air Partnership, *http://www.wrapair.org/forums/ssjf/bart.html,* XLS Spreadsheet, Line 184, 185, Column N. An eligible BART source with a predicted impact of 0.5 dv or more of impairment in a Class I area "contributes" to visibility impairment and is subject to BART. 70 FR 39104, 39121 (July 6, 2005). FCPP contributes to impairment at many surrounding Class I areas well in excess of this threshold.

EPA's guidelines for evaluating BART for such sources are set forth in Appendix Y to 40 CFR Part 51. *See also* 40 CFR 51.308(e)(1)(ii)(A). Consistent with statutory and regulatory requirements, the Guidelines require consideration of "five factors" in making BART determinations. *Id.* at IV.A. Those factors, from the Act's statutory definition of BART, which are applied to all technically feasible control technologies, are: (1) The costs of compliance, (2) the energy and non-air quality environmental impacts of compliance, (3) any pollution control equipment in use or in existence at the source, (4) the remaining useful life of the source, and (5) the degree of improvement in visibility which may reasonably be anticipated to result from the use of such technology. 40 CFR 51.308(e)(1)(ii)(A).

In this proposed action, EPA has taken into consideration each of the five factors after identifying feasible control technologies for FCPP's NO_X and PM emissions.

D. Factual Background

1. Four Corners Power Plant

FCPP is a privately owned and operated coal-fired power plant located on the Navajo Nation Indian Reservation near Farmington, New Mexico. Based on lease agreements signed in 1960, FCPP was constructed and has been operating on real property held in trust by the Federal government for the Navajo Nation. The facility consists of five coal-fired electric utility steam generating units with a total capacity of 2060 megawatts (MW). Units 1, 2, and 3 at FCPP are owned entirely by Arizona Public Service (APS), which serves as the facility operator, and are rated to 170 MW (Units 1 and 2) and 220 MW (Unit 3). Units 4 and 5 are each rated to a capacity of 750 MW, and are co-owned by six entities: Southern California Edison (48%), APS (15%), Public Service Company of New Mexico (13%), Salt River Project (SRP) (10%), El Paso Electric Company (7%), and Tucson Electric Power (7%).

Based on 2009 emissions data from the EPA Clean Air Markets Division,[1] FCPP is the largest source of NO_X emissions in the United States (over 40,000 tons per year (tpy) of NO_X). FCPP, located near the Four Corners region of Arizona, New Mexico, Utah, and Colorado, is approximately 300 kilometers (km) from sixteen mandatory Class I Federal areas: Arches National Park (NP), Bandelier National Monument (NM), Black Canyon of the Gunnison Wilderness Area (WA), Canyonlands NP, Capitol Reef NP, Grand Canyon NP, Great Sand Dunes NP, La Garita WA, Maroon Bells-Snowmass WA, Mesa Verde NP, Pecos WA, Petrified Forest NP, San Pedro Parks WA, West Elk WA, Weminuche WA, and Wheeler Park WA.

APS provided information relevant to a BART analysis to EPA on January 29, 2008. The information consisted of a BART engineering and cost analysis conducted by Black and Veatch (B&V) dated December 4, 2007 (Revision 3), a BART visibility modeling protocol prepared by ENSR Corporation (now called AECOM and referred to as AECOM throughout this document) dated January 2008, a BART visibility modeling report prepared by AECOM dated January 2008, and a document titled APS BART Analysis conclusions, dated January 29, 2008. APS provided supplemental information on cost and visibility modeling in correspondence dated May 28, 2008, June 10, 2008, November 2008, March 16, 2009, October 29, 2009, and April 22, 2010. All of these documents are available in the docket for this proposal.

2. Relationship of NO_X and PM to Visibility Impairment

Particulate matter less than 10 microns (millionths of a meter) in size (PM_{10}) interacts with light. The smallest particles in the 0.1 to 1 micron range interact most strongly as they are about the same size as the wavelengths of visible light. The effect of the interaction is to scatter light from its original path. Conversely, for a given line of sight, such as between a mountain scene and an observer, light from many different original paths is scattered into that line. The scattered light appears as whitish haze in the line of sight, obscuring the view.

PM emitted directly into the atmosphere, also called primary PM, is emitted both from the boiler stacks and from material handling. Of primary PM emissions, those in the smaller particle size range, less than 2.5 microns, tend to have the most impact on visibility. PM emissions from the boiler stacks can have varying particle size makeup depending on the PM control technology. PM from material handling, though, tends to be coarse, *i.e.* around 10 microns, since it is created from the breakup of larger particles of soil and rock.

PM that is formed in the atmosphere from the condensation of gaseous chemical pollutants, also called secondary PM, tends to be fine, *i.e.* smaller than 1 micron, since it is formed from the buildup of individual molecules. This *secondary* PM tends to contribute more to visibility impairment than primary PM because it is in the size range where it most effectively interacts with visible light. NO_X and SO_2 emissions from coal fired power plants are two examples of gaseous chemical pollutants that react with other compounds in the atmosphere to form secondary PM. Specifically, NO_X is a gaseous pollutant that can be oxidized to form nitric acid. In the atmosphere, nitric acid in the presence of ammonia forms particulate ammonium nitrate. The formation of particulate ammonium nitrate is dependent on temperature and relative humidity, and therefore, varies by season. Particulate ammonium nitrate can grow into the size range that effectively interacts with light by coagulating together and by taking on additional pollutants and water. The same principle applies to SO_2 and the formation of particulate ammonium sulfate.

In air quality models, secondary PM is tracked separately from primary PM because the amount of secondary PM formed depends on weather conditions and because it can be six times more effective at impairing visibility. This is reflected in the equation used to calculate visibility impacts from concentrations measured by the Interagency Monitoring of Protected Visual Environments (IMPROVE) monitoring network covering Class I areas.[2]

II. EPA's Proposed Action on the Five Factor Test

A. A BART Determination for FCPP Is Necessary or Appropriate

The numerous Class I areas that surround FCPP are sometimes known as the Golden Circle of National Parks. *See http://www.nps.gov/history/history/online_books/nava/adhi/adhi4e.htm.* Millions of tourists visit these areas, many visiting from other countries to view the unique vistas of the Class I areas in the Four Corners region.

As Congress recognized, visibility is an important value and must be protected in these areas. Yet, air quality and visibility are impaired in the 16 Class I areas surrounding FCPP. The National Park Service noted in 2008 that "[v]isibility is impaired to some degree at all units where it is being measured and remains considerably higher than the target national conditions in many places, particularly on the haziest days." *Air Quality in National Parks,* 2008 Annual Performance & Progress Report, National Resource Report NPS/NRPC/ARD/NRR–2009/151, September 2009, p. 30. Mesa Verde, Grand Canyon, Bryce Canyon and Canyonlands are among the areas the Park Service is monitoring. *Id.* Table 3, p. 19. Although not directly related to visibility, NO_X is also a precursor to ozone formation and the National Park Service also determined that ozone concentrations in Mesa Verde appears to be trending upward over the 1994–2007 period and the Park's annual 4th-highest 8-hour ozone concentrations "are approaching the [NAAQS] standard." *Id.* at 16. FCPP, which emitted over 42,000 tons of NO_X in 2009,[3] was built roughly four decades ago and has not installed any new NO_X controls since the 1990's, including modern combustion technology such as post-2000 low-NO_X burners (LNB) or separated overfire air.

Based on the importance of visibility as a value in this Golden Circle of

[1] "Clean Air Markets—Data and Maps: *http://camddataandmaps.epa.gov/gdm/.*

[2] Guidance for Estimating Natural Visibility Conditions Under the Regional Haze Rule, U.S. Environmental Protection Agency", EPA–454/B–03–005, September 2003; *http://www.epa.gov/ttn/oarpg/t1pgm.html.*

[3] Clean Air Markets Division—Data—Maps.

National Parks, and the substantial NO_X and PM emissions generated by operating FCPP, EPA is proposing to find that BART emission limits are necessary or appropriate.

B. Summary of Proposed BART Emissions Limits

On August 28, 2009, EPA published an Advanced Notice of Proposed Rulemaking (ANPRM) concerning two of the five factors in the BART analysis: Cost of compliance and anticipated visibility improvement. 74 FR 44314. EPA received numerous comments on the ANPRM, including comments from the Navajo Nation, APS, National Park Service and environmental groups. EPA has considered relevant comments we received on the ANPRM in determining which NO_X and PM emission limitations we are proposing today as BART for FCPP.

Based on the available control technologies and the five factors discussed in more detail below, EPA is proposing to require FCPP to meet a NO_X emission limit on Units 1–5 of 0.11 lb/MMBtu. EPA is proposing a PM emission limit on Units 1–3 of 0.012 lb/MMBtu and on Units 4 and 5 of 0.015 lb/MMBtu as BART. EPA is taking comment on an alternative PM emissions limit for Units 1–3 described in more detail in Section II.D.

EPA is not proposing to require each unit to achieve the specified NO_X emission limit. EPA is proposing to require FCPP to meet a plant-wide heat input weighted 30-day rolling average emission limit of 0.11 lb/MMBtu for NO_X for Units 1–5. For PM, we are proposing a BART emission limit of 0.012 lb/MMBtu from Units 1–3 on a 6-hour average basis and 0.015 lb/MMBtu averaged over a 6-hour period for Units 4 and 5, which should be achievable with proper operation of the existing baghouses. EPA is also proposing that Units 1–5 meet a 10% opacity limit which will reasonably assure continuous compliance with the PM emission limits. EPA is taking comment on an alternative PM emission limit for Units 1–3.

The available control technologies and EPA's evaluation of each of the five factors supporting our proposed BART emissions limits for NO_X and PM are discussed in more detail below and in EPA's accompanying Technical Support Document (TSD).

C. Available and Feasible Control Technologies and Five Factor Analysis for NO_X Emissions

APS identified sixteen options as available retrofit technologies to control NO_X. Generally, NO_X control techniques use: (1) Combustion control to reduce the production of NO_X from fuel-bound nitrogen and high temperature combustion; (2) post-combustion add-on control to reduce the amount of NO_X emitted in flue gas by converting NO_X to diatomic nitrogen (N_2); or (3) a combination of combustion and post-combustion controls. EPA approached the five factor analysis using a top-down method. A top-down analysis entails ranking the control options in descending order starting with the most stringent option. The top control option is evaluated and if eliminated based on one of the five factors, the next most stringent option is considered, and so on. The top option for NO_X control is a combination of a post-combustion add-on control, *i.e.,* selective catalytic reduction (SCR), and combustion controls, *i.e.,* low-NO_X burners plus overfire air (LNB + OFA). SCR without LNB + OFA represents the next most stringent option, and LNB + OFA without SCR represents a low-mid level of control. As described in detail below, EPA believes LNB + OFA are not likely to be effective control technologies at FCPP due to the inherent limitations of the existing boilers on all units. Therefore, EPA started our top-down analysis of the five factors with SCR without combustion controls. More details on the control options are provided in Section 2 of the TSD.

As described in our ANPRM, APS has claimed that combustion controls (*i.e.,* low-NO_X burners (LNB) on Units 1 and 2 and low NO_X burners plus overfire air (LNB + OFA) on Units 3–5) would provide NO_X reductions sufficient to meet the presumptive limits for NO_X identified in the BART Guidelines (40 CFR Part 51 Appendix Y). Table 1 shows the presumptive NO_X limits for boilers burning either sub-bituminous or bituminous coal and the emission limits APS considers achievable for Units 1–5. APS submitted NO_X emission limits it considers achievable to EPA in January 2008, March 2009, and October 2009. The coal burned at FCPP has historically been classified as sub-bituminous. APS, however, in its BART analysis has claimed that the coal is bituminous.

TABLE 1—PRESUMPTIVE NO_X LIMITS[4] AND NO_X EMISSIONS (IN LB/MMBTU) FROM LNB (UNITS 1 AND 2) LNB + OFA (UNITS 3–5) CLAIMED ACHIEVABLE BY APS

	Bituminous coal	Sub-Bituminous coal	Emissions after LNB or LNB+OFA (Jan 2008[5])	Emissions after LNB or LNB+OFA (Oct 2009[6])
Unit 1	N/A	N/A	0.48	0.40
Unit 2	N/A	N/A	0.48	0.40
Unit 3	0.39	0.23	0.39	0.32
Unit 4	0.40	0.45	0.40	0.35
Unit 5	0.40	0.45	0.40	0.35

EPA, however, disagrees with APS's contention that EPA should rely only on presumptive limits for BART for NO_X and with APS's claim that LNB and LNB + OFA will be effective at achieving NO_X emissions lower than the presumptive BART emissions limits.

[4] Presumptive limits for Unit 3 based on dry-bottom wall-fired boiler and Units 4 and 5 on cell burner boilers. Presumptive limits do not apply to Units 1 and 2 because they are smaller than 200 MW.

[5] From *2008–01_APS_4_Corners_BART_Analysis_Conclusions.pdf.*

[6] From APS's Comment Letter to EPA dated October 28, 2009.

EPA's presumptive BART limits were not intended to supplant a case-by-case BART determination. For NO_X, for most types of boilers, EPA's presumptive BART limits were intended to indicate what should generally be achievable with combustion modifications such as modern LNB with OFA for a given type of boiler firing either bituminous or sub-bituminous coal. In establishing the presumptions, EPA concluded that these controls were highly cost-effective at large power plants generally and that installation of such controls would result in meaningful visibility improvement at any 750 MW power plant. Thus, these controls are required at a minimum at these facilities unless there are source-specific circumstances that would justify a different conclusion. EPA did not consider the question of what more stringent control technologies might be appropriately determined to be BART, however, especially in the case where the visibility benefits may be substantial. A full case-by-case BART analysis is required for each facility. In this instance, given the fact that FCPP is the largest source of NO_X emissions in the United States and that it is surrounded by 16 mandatory Class I areas, EPA considers it appropriate to carefully consider NO_X emission limits based on a full analysis of the five BART factors. In this rulemaking, EPA is undertaking a complete BART analysis for the FCPP for the first time, an analysis that is specific to FCPP and that takes into consideration the five factors set forth in the CAA.

Because EPA is relying on the five-factor analysis and not the presumptive NO_X levels in the BART guidelines, it is not necessary for EPA to make a determination on the classification of coal used by APS as bituminous or sub-bituminous. EPA is taking the coal characteristics into account in establishing the NO_X BART emission limit, but the classification as bituminous or sub-bituminous is only relevant for choosing presumptive limits, which we are not doing in this proposal. Although the emissions level claimed by APS for LNB + OFA retrofit of Units 4 and 5 are below the presumptive limits for both sub-bituminous coal and bituminous coal, we note that the presumptive levels of 0.40 and 0.45 lb/MMBtu provide little reduction of baseline NO_X emissions (0.49 lb/MMBtu) from these units.

In our ANPRM, EPA questioned the ability of LNB and LNB + OFA to result in the magnitude of NO_X reductions being claimed as achievable by APS. APS has submitted two different reports concerning the potential for NO_X reductions at FCPP. The first report written by Andover Technology Partners [7] (Andover Report) was submitted by APS by letter dated August 7, 2009, prior to the publication of the ANPRM.[8] The Andover Report outlined the considerable challenges associated with LNB and OFA retrofits on each unit, including boiler design and size, and FCPP coal characteristics. Although four different technology suppliers claimed they could achieve NO_X reductions with burner retrofits, the Andover Report concluded that LNB retrofits were not likely to be beneficial for the boilers at FCPP because the risk of adverse operational side effects outweighed the potentially modest improvement in emissions performance.

The fireboxes for Units 1, 2 and 3 are considered to be too small to effectively use modern approaches to low NO_X combustion, which require separated OFA. Unit 2 was retrofitted with a 1990-designed LNB and, according to APS, had considerable operational problems subsequent to this retrofit. Units 1 and 2 are identical boilers. Thus due to operational difficulties following the Unit 2 retrofit, APS did not attempt a retrofit on Unit 1, which continues to emit NO_X at a concentration as high as 0.8 lb/MMBtu.

Units 4 and 5 were originally designed and operated with cell burners. This type of combustion burner inherently creates more NO_X than conventional wall-fired burners. Although the type of burners in the cell boilers were replaced in the 1980s, the design of a cell boiler limits the NO_X reduction that can be achieved with modern low NO_X combustion techniques. EPA set different presumptive levels of 0.40 lb/MMBtu or 0.45 lb/MMBtu for the expected achievable NO_X reductions for cell burner boilers with combustion modifications due to this design limitation. Thus, the efficacy of LNB + OFA on Units 4 and 5 will also be limited by their inherent design. Even if retrofit of Units 4 and 5 results in some improvement in NO_X performance (approaching 0.40 lb/MMBtu), the Andover Report did not recommend burner retrofits because potential operational problems on the two largest units at FCPP were not worth the small incremental reduction in NO_X emissions.

A subsequent report prepared by APS and submitted to EPA as Attachment J of its October 28, 2009 comment letter on the ANPRM, indicated that Units 1 and 2 could achieve 0.40 lb/MMBtu with LNB retrofit, Unit 3 could achieve 0.32 lb/MMBtu and Units 4 and 5 could achieve 0.35 lb/MMBtu with a combination of LNB + OFA retrofit. *See* Table 1 above. APS cited examples of several boilers with LNB or LNB + OFA retrofits that achieve emission rates of 0.4 lb/MMBtu or below.

EPA Clean Air Markets Division (CAMD) evaluated the boiler examples from Attachment J to assess the emissions reductions that have been achieved with modern combustion modification retrofits. CAMD concluded that other boilers have achieved NO_X emissions of approximately 0.4 lb/MMBtu, but could not determine if Units 3–5 at FCPP were indeed comparable to those boilers. APS did not provide enough information in Attachment J to assess the level of similarity. Based on information provided in the Andover Report and the EPA CAMD review of Attachment J provided by APS, EPA determined that combustion controls are not likely to be effective control technologies at FCPP due to the inherent limitations of the existing boilers on all units. Therefore, EPA rejected the top control option, SCR in combination with LNB + OFA, and focused our five factor analysis on the next most stringent technology, SCR without LNB + OFA, which can reduce NO_X emissions by 80%.

i. *Factor 1:* Cost of Compliance

The cost effectiveness of controls is expressed in cost per ton of pollutant reduced ($/ton). 40 CFR Part 51, App. Y, IV.D.4.c. Cost effectiveness is calculated by first estimating the total capital and annual costs of the BART controls. The second step requires calculating the amounts of the pollutants which will be reduced by the control technology selected as BART. This second step compares the uncontrolled baseline emissions (*i.e.* emissions from current operations) to the proposed BART emissions limits. *Id.*

APS submitted cost estimates for all feasible control options in January 2008 and submitted revised cost estimates for SCR on March 16, 2009 to reflect higher costs of construction services and materials. In our August 28, 2009 ANPRM, we presented APS's cost estimates for emissions controls for NO_X, which included the revised SCR costs submitted in March 2009, and cost estimates from the National Park Service

[7] "Assessment of Potential for Further NO_X Reduction by Combustion-Based Control at the Four Corners Steam Electric Station", April 5, 2004.

[8] EPA received the Andover Report only a few days prior to signature of the ANPRM. Therefore the report was not considered in the ANPRM or made available in the ANPRM docket. APS claimed the report Confidential Business Information (CBI) and on July 9, 2010, EPA's Regional Counsel determined this report was not CBI.

(NPS). In the ANPRM, EPA revised the annual operating cost estimates submitted by APS based on the ratio of annual to capital costs from other facilities in the western United States. NPS conducted an independent analysis strictly adhering to the *EPA Control Cost Manual* and calculated significantly lower cost effectiveness. In subsequent comments on the ANPRM, NPS submitted revised cost estimates for each unit. All of these cost estimates are described in detail in the TSD.

Subsequent to the ANPRM, APS submitted revised cost estimates for the NO_X control technologies. APS provided these revised cost estimates to EPA via electronic mail on April 22, 2010, in a report dated February 10, 2010. Costs estimated for Unit 1–3 were dated May 2008, whereas revised cost estimates were provided for Units 4 and 5 were dated February 2010. All cost estimates in the 2010 submission were lower than those submitted previously. The report updated cost estimates for Units 4 and 5 in 2010 dollars and provided cost estimates for Units 1–3 in 2008 dollars that are lower than the costs APS submitted in March 2009 upon which the ANPRM relied. Because APS only recently withdrew a claim of confidentiality for the 2010 cost estimates, however, this proposal is based on the costs submitted in March 2009. The TSD also contains a further discussion of these costs.

For this NPR, EPA evaluated the capital and annual cost estimates APS submitted in March 2009 against the *EPA Control Cost Manual.* Although EPA has generally accepted the costs estimates APS submitted, we have eliminated any line item costs that are not explicitly included in the *EPA Control Cost Manual* and we have revised the costs where EPA determined alternate costs were more appropriate, e.g., cost of catalysts, or interest rates. Additional detailed information and the results of our revisions to the cost estimates are included in Table 13 of the TSD. EPA's cost effectiveness estimates and those estimated by NPS and APS are shown in Table 2.

TABLE 2—EPA, NPS, AND APS COST EFFECTIVENESS FOR SCR ON UNITS 1–5

	EPA Cost effectiveness ($/ton)	NPS Cost effectiveness ($/ton)	APS Cost effectiveness ($/ton)
Unit 1	$2,515	$1,326	$4,887
Unit 2	3,163	1,882	6,170
Unit 3	2,678	1,390	5,142
Unit 4	2,622	1,453	5,197
Unit 5	2,908	1,598	5,764

EPA's cost effectiveness calculations in this NPR are lower than we presented in the ANPRM. The estimates continue to be lower than those estimated by APS but higher than those estimated by NPS. The range of cost effectiveness that EPA has calculated and upon which this proposal is based, from $2,515–$3,163/ton of NO_X removed, is lower than or within the range of other BART evaluations. Some BART analyses for other electric generating facilities evaluated SCR with a range of costs: Pacificorps Jim Bridger Units 2–4: $2,256–$4,274/ton of NO_X removed; Pacificorps Naughton Units 1–3: $2,751–$2,830/ton of NO_X removed; PGE Boardman: $3,096/ton of NO_X removed; M.R. Young Units 1 and 2: $3,950–$4,250/ton of NO_X removed; and Centralia Power Plant Units 1 and 2: $9,091/ton of NO_X removed. San Juan Generating Station in Farmington, New Mexico, is a nearby coal fired power plant that was built shortly after FCPP and uses coal with almost identical characteristics. On June 21, 2010, the New Mexico Environmental Department proposed requiring SCR as BART for the four units at San Juan Generating Station based on cost-effectiveness calculations ranging from $5,946/ton NO_X reduced to $7,398/ton NO_X reduced.

EPA considers its revised cost-effectiveness estimates of $2,515–$3,163/ton of NO_X removed to be more accurate and representative of the actual cost of compliance. However, even if EPA had decided to accept APS's worst-case cost estimates of $4,887–$6,170/ton of NO_X removed, EPA considers that estimate to be cost effective for the purpose of proposing an 80% reduction in NO_X, achievable by installing and operating SCR as BART at FCPP.

ii. *Factor 2:* Energy and Non-Air Quality Impacts

The Navajo Nation has expressed concerns that requiring additional controls at FCPP could result in lost Navajo employment and royalties if FCPP were to shut down or curtail operations. EPA has received no definitive information indicating that FCPP intends to shut down or curtail operations, but to assess the possibility that today's proposed BART limits could have such an effect, EPA conducted an economic analysis that looked at the impact of requiring SCR on FCPP.

Based on an economic analysis of the increase in electricity generation costs as a result of SCR compared to the estimated cost to purchase electricity on the wholesale market, FCPP is expected to remain competitive relative to the wholesale market, suggesting that the incremental cost increase for SCR alone should not force FCPP to shut down. This analysis estimates that the average cost of electricity generation over the 20 year amortization period as a result of SCR implementation will increase by 22%, or $0.00740/kWh.

Retail electricity consumers, however, pay more than just the generation costs of power. Retail rates include the cost to transmit and distribute electricity as well as generate electricity. Additionally, for APS customers, for example, the generation cost increase on FCPP due to SCR would flow into a broader retail rate impact calculation based on the entire portfolio of APS generation assets and purchases power contracts, which include coal (of which FCPP is only a portion of APS' total coal portfolio), natural gas, nuclear, and some renewables. For these reasons, EPA expects the potential rate increase to APS rate payers resulting from SCR on FCPP to be significantly lower than 22%. This topic is discussed in more detail in the TSD.

In addition to concerns about possible facility shut down, EPA received comments regarding potential impacts of increased transportation emissions associated with urea deliveries to FCPP for SCR and concerns of the affect of SCR on salability of fly ash. EPA conducted an analysis to evaluate any increase in health risks resulting from increased diesel truck traffic to and from FCPP and determined that the increase in cancer and non-cancer health risks

associated with transportation emissions in the most impacted census block in San Juan County, New Mexico, are well below background levels and will not result in a significant health risk.

The Salt River Pima Maricopa Indian Community expressed concern about the impact of SCR on their Phoenix Cement Company fly ash business unit at FCPP. Ammonia adsorption (resulting from ammonia injection from SCR or selective noncatalytic reduction—SNCR) to fly ash is generally less desirable due to odor but does not impact the integrity of the use of fly ash in concrete. However, other NO_X control technologies, including LNB, also have undesirable impacts on fly ash. LNBs increase the amount of unburned carbon in the fly ash, also known as Loss of Ignition (LOI), which does affect the integrity of the concrete. Commercial-scale technologies exist to remove ammonia and LOI from fly ash. Therefore, EPA has determined that the impact of SCR on the fly ash at FCPP is smaller than the impact of LNB on the fly ash, and in both cases, the adverse effects can be mitigated.

EPA concludes that the energy and non-air quality impacts of SCR do not warrant elimination of SCR as the top control option for NO_X.

iii. *Factor 3:* Existing Controls at the Facility

There are some existing controls at FCPP for NO_X. APS has installed a variety of LNB on Units 2–5 although these controls are all about 20 years old and there have been significant advances in the technology for most EGU boilers. Unit 1 does not have any NO_X controls. The controls that APS is operating at FCPP for NO_X do not result in the magnitude of NO_X emissions reduction that are consistent with BART and do not represent current control technologies.

iv. *Factor 4:* Remaining Useful Life of Facility

The remaining useful life of the facility can be relevant if the facility may shut down before the end of the amortization period used to annualize the costs of control for a technology. In its analysis, APS used an amortization period of 20 years, the standard amortization period recommended by EPA, and indicated that it anticipated that the remaining useful life of Units 1–5 is at least 20 years. As it appears that the FCPP facility will continue to operate for at least 20 years, EPA agrees with the use of an amortization period of 20 years to estimate costs.

v. *Factor 5:* Degree of Visibility Improvement

The fifth factor to consider under EPA's BART Guidelines is the degree of visibility improvement from the BART control options. *See* 59 FR at 39170. The BART guidelines recommend using the CALPUFF air quality dispersion model to estimate the visibility improvements of alternative control technologies at each Class I area, typically those within a 300 km radius of the source, and to compare these to each other and to the impact of the baseline (*i.e.,* current) source configuration. APS included sixteen Class I Areas in its modeling analysis; fifteen are within 300 km of FCPP and one Class I area, Grand Canyon National Park, is just beyond 300 km from FCPP. These areas are listed in Table 22 of the TSD.

The BART guidelines recommend comparing visibility improvements between control options using the 98th percentile of 24-hour delta deciviews, which is roughly equivalent to the facility's 8th highest visibility impact day. The "delta" refers to the difference between total deciview impact from the facility plus natural background, and deciviews of natural background alone, so "delta deciviews" is the estimate of the facility's impact. Visibility is traditionally described in terms of visual range in kilometers or miles. However, the visual range scale does not correspond to how people perceive visibility because how a given increase in visual range is perceived depends on the starting visibility against which it is compared. Thus, an increase in visual range may be perceived to be a big improvement when starting visibility is poor, but a relatively small improvement when starting visibility is good.

The "deciview" scale is designed to address this problem. It is linear with respect to perceived visibility changes over its entire range, and is analogous to the decibel scale for sound. This means that a given change in deciviews will be perceived as the same amount of visibility change regardless of the starting visibility. Lower deciview values represent better visibility and greater visual range, while increasing deciview values represent increasingly poor visibility. In the BART guidelines, EPA noted that a 1.0 deciview impact from a source is sufficient to "cause" visibility impairment and that a source with a 0.5 deciview impact must "contribute" to visibility impairment. Generally, 0.5 deciviews is the amount of change that is just perceptible to a human observer.

Under the BART guidelines, the improved visibility in deciviews from installing controls is determined by using the CALPUFF air quality model. CALPUFF, generally, simulates the transport and dispersion of FCPP emissions, and the conversion of SO_2 emitted from FCPP to particulate sulfate and NO_X to particulate nitrate, at a rate dependent on meteorological conditions and background ozone concentration. These concentrations are then converted to delta deciviews by the CALPOST post-processor. The CALPUFF model and CALPOST post-processing are explained in more detail in the TSD.

The "delta deciviews" estimated by the modeling represents the facility's impact on visibility at the Class I areas. Each modeled day and location in the Class I area will have an associated delta deciviews. For each day, the model finds the maximum visibility impact of all locations (i.e., receptors) in the Class I area. From among these daily values, the BART guidelines recommend use of the 98th percentile, which is roughly equivalent to the 8th highest day for a given year, for comparing the base case and the effects of various controls. The 98th percentile is recommended rather than the maximum value to avoid undue influence from unusual meteorological conditions. Meteorological conditions are modeled using the CALMET model.

APS conducted modeling for FCPP according to a modeling protocol submitted to EPA. See BART Visibility Modeling Protocol for the Arizona Public Service Four Corners Power Plant, ENSR Corporation, January 2008. APS's modeling used the CALMET and CALPUFF versions recommended by EPA but in blending in meteorological station wind observations, APS used a lower radius of influence for stations. This change resulted in smoother wind fields. After initial input from the Federal Land Managers, EPA requested APS to change certain other CALMET option settings. These changes resulted in a more refined approach that is more consistent with approaches used in PSD permit application modeling. Further details about the CALPUFF and CALMET modeling are in the TSD, and the relevant CALMET settings are listed in Table 23.

In addition to the different CALPUFF emission rates described above, EPA's evaluation of anticipated visibility improvement used revised post-processor settings from those originally used by APS. The USFS informed EPA that the ammonia background concentrations modeled by APS in January 2008 were lower than observed

concentrations.[9] The USFS recommended a method of back-calculating the ammonia background based on monitored values of sulfate and nitrate. EPA's ANPRM provided results based on using the USFS's back-calculation methodology.

The visibility modeling supporting today's proposal, however, uses a constant ammonia background of 1 ppb, which is the default value recommended for western areas. IWAQM Phase 2 document.[10] The TSD contains supplemental modeling using back-calculated ammonia concentrations, a thorough discussion of the back-calculation methodology and the sensitivity results based on selecting different concentrations of background ammonia.

The background values of ammonia are important because it is a precursor to particulate ammonium sulfate and ammonium nitrate, both of which degrade visibility. Ammonia is present in the air from both natural and anthropogenic sources. The latter may include livestock operations, fertilizer application associated with farming, and ammonia slip from the use of ammonia in SCR and SNCR technologies to control NO_X emissions. Sensitivity of the model results to other ammonia assumptions are discussed in the TSD, and do not change the ranking of control options for evaluating visibility improvement, or the overall conclusions of the visibility analysis.

In our modeling input for ammonia, EPA assumed that the remaining ammonia in the flue gas following SCR reacts to form ammonium sulfate or ammonium bisulfate before exiting the stack. This particulate ammonium is represented in the modeling as sulfate (SO_4) emissions. Thus, EPA addressed ammonia solely as a background concentration.

In the supplemental sensitivity analyses using different ammonia values described in the TSD, ammonia concentrations for Mesa Verde National Park were not based on the back-calculation method, but instead were derived from measured ammonia concentrations in the Four Corners area, as described in Sather *et al.,* (2008).[11] Monitored data were available within Mesa Verde NP, but because particulate formation happens within a pollutant plume as it travels, rather than instantaneously at the Class I area, EPA also examined data at locations outside Mesa Verde NP itself. Monitored 3-week average ammonia at the Substation site, some 30 miles south of Mesa Verde, were as high as 3.5 ppb, though generally levels were less than 1.5 ppb. Maximum values in Mesa Verde were 0.6 ppb, whereas other sites' maxima ranged from 1 to 3 ppb, but generally values were less than 2 ppb. EPA used values estimated from Figure 5 of Sather *et al.,* (2008), in the mid-range of the various stations plotted. The results ranged from 1.0 ppb in winter to 1.5 ppb in summer. See TSD, Table 33.

The BART determination guidelines recommend that visibility impacts should be estimated in deciviews relative to natural background conditions. CALPOST, a CALPUFF post-processor, uses background concentrations of various pollutants to calculate the natural background visibility impact. EPA used background concentrations from Table 2–1 of "Guidance for Estimating Natural Visibility Conditions Under the Regional Haze Rule."[12] Although the concentration for each pollutant is a single value for the year, this method allows for monthly variation in its visibility impact, which changes with relative humidity. The resulting deciviews differ by roughly 1% from those resulting from the method originally used by APS.

To assess results from the CALPUFF model and post-processing steps, in addition to considering deciview changes directly, EPA used a least-squares regression analysis of all visibility modeling output from the 2001–2003 modeling period to determine the percent improvement in FCPP's visibility impact (in delta deciviews) resulting from the application of control technologies compared to the FCPP's baseline impacts.

As outlined in the 1999 Regional Haze rule (64 FR 35725, July 1, 1999), a one deciview change in visibility is a small but noticeable change in visibility under most circumstances when viewing scenes in a Class I area. Table 3 presents the visibility impacts of the 98th percentile of daily maxima for each Class I area for each year, averaged over 2001–2003.[13] The modeled visibility improvement at all Class I areas exceeds 0.5 deciviews and at most Class I areas exceeds 1 deciview.

TABLE 3—EPA MODELING RESULTS—8TH HIGH DELTA dv IMPROVEMENT AND PERCENT CHANGE IN DELTA DECIVIEW (dv) IMPACT FROM NO_X CONTROLS COMPARED TO BASELINE IMPACTS FROM 2001–2003 USING 1 PPB AMMONIA BACKGROUND SCENARIO

Class I area	Distance to FCPP	Baseline impact	Improvement from LNB/LNB + OFA		Improvement from SCR	
	Kilometers (km)	Delta dv	Delta dv	%	Delta dv	%
Arches National Park	245	4.11	0.87	18	2.40	55
Bandelier Wilderness Area	216	2.90	0.54	21	1.62	57
Black Canyon of the Gunnison WA	217	2.36	0.46	23	1.42	60
Canyonlands NP	214	5.24	0.79	16	2.81	51
Capitol Reef NP	283	3.23	0.77	18	1.87	52
Grand Canyon NP	345	1.63	0.34	20	0.88	55
Great Sand Dunes NM	279	1.16	0.31	25	0.67	62
La Garita WA	202	1.72	0.44	25	1.05	62
Maroon Bells Snowmass WA	294	1.04	0.27	26	0.64	63

[9] Letter from Rick Cables (Forest Service R2 Regional Forester) and Corbin Newman (Forest Service R3 Regional Forester) to Deborah Jordan (EPA Region 9 Air Division Director) dated March 17, 2009.

[10] Interagency Workgroup On Air Quality Modeling (IWAQM) Phase 2 Summary Report And Recommendations For Modeling Long Range Transport Impacts (EPA–454/R–98–019), EPA OAQPS, December 1998, *http://www.epa.gov/scram001/7thconf/calpuff/phase2.pdf.*

[11] Mark E. Sather *et al.,* 2008. "Baseline ambient gaseous ammonia concentrations in the Four Corners area and eastern Oklahoma, USA". Journal of Environmental Monitoring, 2008, 10, 1319–1325, DOI: 10.1039/b807984f.

[12] U.S. Environmental Protection Agency, EPA–454/B–03–005, September 2003, on web page *http://www.epa.gov/ttn/oarpg/t1pgm.html,* with direct link *http://www.epa.gov/ttn/oarpg/t1/memoranda/rh_envcurhr_gd.pdf.*

[13] EPA did not average the 98th percentiles from each year as did APS, rather EPA used the 98th percentile from all three years taken together. This does not significantly affect the overall results.

TABLE 3—EPA MODELING RESULTS—8TH HIGH DELTA dv IMPROVEMENT AND PERCENT CHANGE IN DELTA DECIVIEW (dv) IMPACT FROM NO_X CONTROLS COMPARED TO BASELINE IMPACTS FROM 2001–2003 USING 1 PPB AMMONIA BACKGROUND SCENARIO—Continued

Class I area	Distance to FCPP	Baseline impact	Improvement from LNB/LNB + OFA		Improvement from SCR	
	Kilometers (km)	Delta dv	Delta dv	%	Delta dv	%
Mesa Verde NP	62	5.95	0.62	13	2.43	45
Pecos WA	258	2.16	0.52	23	1.15	58
Petrified Forest NP	224	1.40	0.27	21	0.65	56
San Pedro Parks WA	160	3.88	0.68	19	2.02	53
Weminuche WA	137	1.87	0.49	25	1.19	62
West Elk WA	245	2.76	0.65	23	1.70	60
Wheeler Peak WA	265	1.53	0.37	24	0.84	59
Total Delta dv or Average % Change in Delta dv		42.94	8.39	21	23.34	57

Because installation and operation of SCR at FCPP to reduce NO_X emissions by 80% will provide perceptible and significant visibility improvements at all of the surrounding Class I areas, and because LNB will result in much less visibility improvement than SCR, EPA is proposing to require FCPP to reduce NO_X by 80% by meeting a plant-wide emissions limit of 0.11 lb/MMBtu, which is achievable with SCR. Our analysis also shows that the visibility improvement from the emissions reductions achieved with LNB are significantly lower.

D. Available and Feasible Control Technologies and Five Factor Analysis for PM Emissions

For PM, APS identified seven options as available retrofit technologies that would rely on post-combustion capture of the emissions. APS determined three options were technically feasible for PM control on Units 1–3: Wet electrostatic precipitators (ESPs), dry ESPs, and pulse jet fabric filters (PJFF or baghouses). These three control options were determined to all have similar levels of PM control of 99.9%. One control option, called the GE–MAX–9 hybrid, which is an ESP using a fabric filter collection bag, is estimated to have a PM control efficiency of 99.999% and has been used in a demonstration project, but has not been demonstrated on larger units. Therefore, EPA considered the other top three options, wet and dry ESP and baghouses, for PM control at FCPP.

APS has been operating venturi scrubbers on Units 1–3 at FCPP since the 1970s resulting in PM reductions as well as SO_2 reductions. PM is controlled on Units 4 and 5 with baghouses. Venturi scrubbers have been used by large coal fired electric generating units (EGUs), but since promulgation of the New Source Performance Standards, have largely been replaced by more advanced technology that can achieve better PM reductions and provide better compliance assurance. Units 1–3 at FCPP are the last EGUs in Region 9 to continue to operate venturi scrubbers. The other EGUs in Region 9 have generally been retrofit with baghouses.

In this NPR, EPA is proposing to require APS to upgrade its PM controls as described below to meet an emission limit of 0.012 lb/MMBtu and 10% opacity on Units 1–3, which is achievable either through installing baghouses or ESPs. Because of the high incremental cost of both options, however, EPA is also asking for comment on whether APS can satisfy BART by operating the existing venturi scrubbers to meet an emissions limit of 0.03 lb/MMBtu with a 20% opacity limit to demonstrate continuous compliance. EPA is proposing to require APS to operate the existing baghouse for Units 4 and 5 to meet an emissions limit of 0.015 lb/MMBtu and 10% opacity.

i. *Factor 1:* Cost of Compliance

EPA is proposing to require APS to install ESPs (wet or dry) or PJFFs for Units 1–3 to comply with an emissions limit of 0.012 lb/MMBtu and a 10% opacity limit. For Units 4 and 5, APS would not need to install any controls in addition to the baghouses currently in place but would be required to operate the baghouses to meet an emission limit of 0.015 lb/MMBtu and a 10% opacity limit.

The wet-membrane ESP is the lowest cost approach to meeting the proposed PM BART limit of 0.012 lb/MMBtu for Units 1–3, but a wet membrane ESP would result in a very high cost effectiveness value for incremental cost because the existing venturi scrubbers are removing much of the PM. In other words, any control device, such as an ESP, placed downstream of the venturi scrubbers will result in a high incremental cost because the denominator (tons removed) of the cost effectiveness calculation will be relatively small.

Alternatively, APS could install baghouses on Units 1–3 at FCPP upstream of the venturi scrubbers. The baghouses would be the most likely choice for APS for PM control if APS also wants to achieve significant mercury ("Hg") reduction from these units. Installing baghouses would make those controls the primary PM control device (*i.e.* the downstream venturi scrubbers would primarily control SO_2 emissions) and the cost effectiveness for Units 1–3 would average less than $110 per ton of PM removed. These costs are discussed further in Section 3 of the TSD.

Baghouses have already been installed on the four other coal fired EGUs in Region 9 that had historically used venturi scrubbers for PM control, including the only other venturi scrubber owned and operated by APS at its Cholla Unit 1. NV Energy Reid Gardner offered to install baghouses at Units 1, 2, and 3 as extra injunctive relief in a settlement agreement. Those baghouses are installed and operating (despite the high incremental dollars per ton of PM removed) to allow the units to achieve continuous compliance with PM and opacity limits and to prepare for the upcoming utility MACT regulation of Hg.

EPA considers installation of either ESPs (wet or dry) or baghouses as reasonable-cost technology capable of achieving the proposed BART emission limit of 0.012 lb/MMBu for Units 1–3. However, because of the high incremental costs associated with ESPs or baghouses, EPA is also asking for

comment on whether APS can satisfy BART by continuing to operate the venturi scrubbers on Units 1–3, demonstrating compliance with an emissions limit of 0.03 lb/MMBtu with a continuous opacity limit of 20%. EPA's basis for establishing a PM emissions limit of 0.03 lb/MMBtu is consistency with NSPS Subpart Da, which has been the applicable emissions limit for any boiler placed into service after 1978. We believe that an emissions limit that has been in place for over 35 years should be achievable with the venturi scrubbers. We provide further discussion of this issue in Subsection D.3 below and the TSD.

ii. *Factor 2:* Energy and Non-Air Quality Impacts

EPA is not aware of any energy and non-air quality impacts associated with any of the technologies discussed above that would eliminate them from consideration as BART.

iii. *Factor 3:* Existing Controls at the Facility

Units 1–3 are controlled by venturi scrubbers, which also are used for SO_2 control. These scrubbers operate at pressure drops less than 10 inches of water. Venturi scrubbers have not been installed for PM pollution control on any coal fired EGU in Region 9 since the early 1970s. Venturi scrubbers have not been in use since that time principally due to concerns over the ability of venturi scrubbers to continuously meet the 0.10 lb/MMBtu standard established by a New Source Performance Standard in 1971. *See* 40 CFR Part 60 Subpart D. Fossil fuel fired boiler standards for coal fired units were revised for units built after 1978 and the PM limit was lowered to 0.03 lb/MMBtu. *See* 40 CFR Part 60 Subpart Da. Most current coal fired boilers now use baghouses which are capable of meeting PM limits of about 0.01 to 0.012 lb/MMBtu.

As mentioned earlier in the cost discussion, baghouses have already been installed on the four other coal fired EGUs in Region 9 that had historically used venturi scrubbers for PM control, including APS's Cholla Unit 1. These baghouses were installed, despite the very high incremental dollars per ton of PM removed, to allow the companies to continue to operate the units in continuous compliance with their PM and opacity limits.

EPA notes that Units 1–3 at FCPP were operated with a re-heat of the scrubber exhaust. This allows the use of Continuous Opacity Monitors (COMs) in their stacks and provides an ongoing measurement of the opacity compliance. EPA understands that these three units originally installed and operated a re-heat system, but FCPP discontinued its use. EPA Region 9 is not aware of when APS discontinued using the re-heat system. The three venturi-equipped units, Units 1–3, do not have COMs or opacity limits, which are required on all other EGUs in Region 9 and likely all across the U.S. because SIPs, such as Arizona's, generally include a 20% opacity standard. Opacity standards are a regulatory tool that allows agencies and the public to ensure continuing compliance for PM.

Over the past several years the PM source testing for Units 1 and 2 have consistently complied with the PM limit of 0.03 lb/MMBtu by operating the venturi scrubbers. Unit 3 exceeded the limit in 2007 but after subsequent source tests averages an emission rate of below 0.03 lb/MMBtu.

EPA is requesting comment on allowing APS to continue to operate the venturi scrubbers on Units 1–3 provided it can demonstrate compliance with an emissions limit of 0.03 lb/MMBtu (as required by the NSPS Subpart Da for all post 1978 units) and a continuous opacity limit of 20%.

iv. *Factor 4:* Remaining Useful Life of Facility

As with NO_X, EPA is assuming that the remaining useful life of the facility is 20 years.

v. *Factor 5:* Degree of Visibility Improvement

The modeled visibility improvements resulting from additional PM control are relatively small. See Table 4.

TABLE 4—EPA MODELING RESULTS—8TH HIGH DELTA dv IMPROVEMENT AND PERCENT CHANGE IN DELTA DECIVIEW (dv) IMPACT FROM PM CONTROL COMPARED TO BASELINE IMPACTS FROM 2001–2003 USING 1 PPB AMMONIA BACKGROUND SCENARIO

Class I area	Distance to FCPP	Baseline impact	Improvement from PM control	
	Kilometers (km)	Delta dv	Delta dv	%
Arches National Park	245	4.11	0.01	0
Bandelier Wilderness Area	216	2.90	0.01	0
Black Canyon of the Gunnison WA	217	2.36	0	0
Canyonlands NP	214	5.24	0.02	0
Capitol Reef NP	283	3.23	0.01	0
Grand Canyon NP	345	1.63	0.01	0
Great Sand Dunes NM	279	1.16	0	0
La Garita WA	202	1.72	0	0
Maroon Bells Snowmass WA	294	1.04	0	0
Mesa Verde NP	62	5.95	0.02	1
Pecos WA	258	2.16	0.01	0
Petrified Forest NP	224	1.40	0.01	0
San Pedro Parks WA	160	3.88	0.02	1
Weminuche WA	137	1.87	0	0
West Elk WA	245	2.76	0	0
Wheeler Peak WA	265	1.53	0.01	0
Total Delta dv or Average % Change in Delta dv	.....	42.94	0.13	0

However, this factor may be somewhat misleading because the model does not include consideration of the visibility impairing plume that is almost always present after the steam plume from Units 1–3 evaporates. The

term EPA uses for this plume is a "secondary visible plume". This secondary visible plume often stretches for over 20 miles from FCPP and is most apparent in the early mornings when the typical inversions cap the dispersion of the secondary visible plume. EPA does not have any information as to whether this secondary visible plume can be seen from Mesa Verde National Park, the closest Class 1 area to FCPP. EPA Region 9 staff has observed this secondary visible plume in New Mexico out as far as Aztec and Bloomfield en route to Farmington from Albuquerque. Therefore, EPA is specifically seeking information on this secondary visible plume, its frequency and persistence, and whether or not it affects or can be observed from any Class 1 area.

In the TSD, EPA discusses this secondary visible plume and whether it is related to the poor control of fine particulates by the venturi scrubbers. EPA is also seeking information as to whether this plume has been observed from Units 4 and 5. Although the modeled visibility improvements from requiring additional PM controls are small, EPA considers eliminating the secondary visible plume from Units 1–3 to be important for visibility in the area. EPA is proposing to require APS to install either ESPs (wet or dry) or baghouses to meet an emissions limit of 0.012 lb/MMBtu with a 10% opacity limit. EPA is also taking comment on whether BART can be satisfied by allowing APS to continue to operate its existing venturi scrubbers on Units 1–3 to demonstrate compliance with an emissions limit of 0.03 lb/MMBtu with a 20% opacity limit.

III. EPA Proposed Action on Material Handling Limits

EPA is also proposing dust control requirements for FCPP. These requirements were included in the FIP that EPA finalized in 2007. APS appealed this portion of the 2007 FIP and EPA agreed to a voluntary remand of the dust control requirements to provide further justification in the record.

FCPP receives approximately 10 million tons of coal per year for combusting in the Units 1–5. This material moves by conveyor belt across the property line through numerous transfer points before being loaded to the storage silos that feed the individual Units. Each of these transfer points along with the conveyor belts has the potential for PM emissions. The PM can be minimized by collecting devices or dust suppression techniques such as covered conveyors or spraying devices at the transfer points.

After combustion, FCPP has a very large amount of ash that needs to be handled properly to prevent PM emissions to the air. The coal APS combusts at FCPP has as much as 25% ash. This means that there are over a million tons of ash that must be properly transported within the plant and then disposed. Some of this ash is stored in ash silos and is sold to companies that use it as an additive for making concrete. Much of the ash is currently disposed at a relatively new onsite ash landfill. All of this ash, which has the potential to become airborne PM, must be properly handled to prevent PM_{10} NAAQS issues.

FCPP's property line abuts the coal mine property and the entire coal handling and fly ash storage is within close proximity to Morgan Lake which is a recreational lake just beyond the FCPP's property line. EPA has received numerous complaints from Navajo Tribal members concerning excess dust generated from the new landfill. For these reasons, EPA considers it necessary or appropriate for dust/PM suppression measures to be enforceable to protect the ambient air quality.

EPA is proposing to require APS to implement a dust control plan and a 20% opacity standard for all material handling operations. The dust plan must provide measures to ensure that the coal handling, ash handling and disposal and general dust generating sources do not exceed 20% opacity. Dust control measures at coal fired power plants are important for maintaining the PM_{10} NAAQS in the areas adjacent to the power plant properties. Most coal fired power plants that are grandfathered from the NSPS Subpart Y (40 CFR part 60) and from Prevention of Significant Deterioration (PSD) case by case BACT determinations are covered by general SIP rules regulating emissions and have associated opacity standards to assure proper operation of dust control or suppression measures during the times when stack testing is not conducted. Grandfathered facilities usually were subject to process weight PM limits under SIPs. These limits used an exponential equation approach to setting the allowable lb/hr PM based on the amount of material processed per hour. The limits typically become more stringent as a ratio of the allowable emissions to the throughput as the amount of material throughput increases. The SIPs also apply a general opacity limit to these PM emitting units.

Because FCPP is located on the Navajo Reservation where generally applicable limits that often are included in SIPs do not exist, and because dust control measures at coal fired power plants are important for maintaining the PM_{10} NAAQS in the areas adjacent to the power plant properties, EPA finds that it is necessary or appropriate to impose measures to limit the amount of PM emissions from these material handling emission sources. EPA recently imposed similar dust control requirements at the Navajo Generating Station which is also on the Navajo Nation Reservation.

IV. Administrative Requirements

A. Executive Order 12866: Regulatory Planning and Review

This proposed action is not a "significant regulatory action" under the terms of Executive Order (EO) 12866 (58 FR 51735, October 4, 1993) because it is a proposed rule that applies to only one facility and is not a rule of general applicability. This proposed rule, therefore, is not subject to review under EO 12866. This action proposes a source-specific FIP for the Four Corners Power Plant on the Navajo Nation.

B. Paperwork Reduction Act

This proposed action does not impose an information collection burden under the provisions of the Paperwork Reduction Act, 44 U.S.C. 3501 *et seq.* Under the Paperwork Reduction Act, a "collection of information" is defined as a requirement for "answers to * * * identical reporting or recordkeeping requirements imposed on ten or more persons * * *." 44 U.S.C. 3502(3)(A). Because the proposed FIP applies to a single facility, Four Corners Power Plant, the Paperwork Reduction Act does not apply. *See* 5 CFR 1320(c).

Burden means the total time, effort, or financial resources expended by persons to generate, maintain, retain, or disclose or provide information to or for a Federal agency. This includes the time needed to review instructions; develop, acquire, install, and utilize technology and systems for the purposes of collecting, validating, and verifying information, processing and maintaining information, and disclosing and providing information; adjust the existing ways to comply with any previously applicable instructions and requirements; train personnel to be able to respond to a collection of information; search data sources; complete and review the collection of information; and transmit or otherwise disclose the information.

An agency may not conduct or sponsor, and a person is not required to respond to a collection of information unless it displays a currently valid OMB control number. The OMB control

numbers for EPA's regulations in 40 CFR are listed in 40 CFR Part 9.

C. Regulatory Flexibility Act

The Regulatory Flexibility Act (RFA) generally requires an agency to prepare a regulatory flexibility analysis of any rule subject to notice and comment rulemaking requirements under the Administrative Procedure Act or any other statute unless the agency certifies that the rule will not have a significant economic impact on a substantial number of small entities. Small entities include small businesses, small organizations, and small governmental jurisdictions.

For purposes of assessing the impacts of today's proposed rule on small entities, small entity is defined as: (1) A small business as defined by the Small Business Administration's (SBA) regulations at 13 CFR 121.201; (2) a small governmental jurisdiction that is a government of a city, county, town, school district or special district with a population of less than 50,000; and (3) a small organization that is any not-for-profit enterprise which is independently owned and operated and is not dominant in its field.

After considering the economic impacts of this proposed action on small entities, I certify that this proposed action will not have a significant economic impact on a substantial number of small entities. The FIP for Four Corners Power Plant being proposed today does not impose any new requirements on small entities. *See Mid-Tex Electric Cooperative, Inc.* v. *FERC,* 773 F.2d 327 (DC Cir. 1985).

D. Unfunded Mandates Reform Act (UMRA)

This proposed rule, if finalized, will impose an enforceable duty on the private sector owners of FCPP. However, this rule does not contain a Federal mandate that may result in expenditures of $100 million (in 1996 dollars) or more for State, local, and tribal governments, in the aggregate, or the private sector in any one year. EPA's estimate for the total annual cost to install and operate SCR on all five units at FCPP and the cost to install and operate new PM controls on Units 1–3 does not exceed $100 million (in 1996 dollars) in any one year. Thus, this rule is not subject to the requirements of sections 202 or 205 of UMRA. This proposed action is also not subject to the requirements of section 203 of UMRA because it contains no regulatory requirements that might significantly or uniquely affect small governments. This rule will not impose direct compliance costs on the Navajo Nation, and will not preempt Navajo law. This proposed action will, if finalized, reduce the emissions of two pollutants from a single source, the Four Corners Power Plant.

E. Executive Order 13132: Federalism

Under section 6(b) of Executive Order 13132, EPA may not issue an action that has federalism implications, that imposes substantial direct compliance costs on State or local governments, and that is not required by statute, unless the Federal government provides the funds necessary to pay the direct compliance costs incurred by State and local governments, or EPA consults with State and local officials early in the process of developing the proposed action. In addition, under section 6(c) of Executive Order 13132, EPA may not issue an action that has federalism implications and that preempts State law, unless the Agency consults with State and local officials early in the process of developing the proposed action.

EPA has concluded that this proposed action, if finalized, may have federalism implications because it makes calls for emissions reductions of two pollutants from a specific source on the Navajo Nation. However, the proposed rule, if finalized, will not impose substantial direct compliance costs on the Tribal government, and will not preempt Tribal law. Thus, the requirements of sections 6(b) and 6(c) of the Executive Order do not apply to this action.

Consistent with EPA policy, EPA nonetheless consulted with representatives of Tribal governments [14] early in the process of developing the proposed action to permit them to have meaningful and timely input into its development.

F. Executive Order 13175: Consultation and Coordination With Indian Tribal Governments

Executive Order 13175, entitled "Consultation and Coordination with Indian Tribal Governments" (65 FR 67249, Nov. 9, 2000), requires EPA to develop "an accountable process to ensure meaningful and timely input by tribal officials in the development of regulatory policies that have tribal implications." Under Executive Order 13175, to the extent practicable and permitted by law, EPA may not issue a regulation that has tribal implications, that imposes substantial direct compliance costs on Indian tribal governments, and that is not required by statute, unless the Federal government provides the funds necessary to pay direct compliance costs incurred by tribal governments, or EPA consults with tribal officials early in the process of developing the proposed regulation and develops a tribal summary impact statement. In addition, to the extent practicable and permitted by law, EPA may not issue a regulation that has tribal implications and pre-empts tribal law unless EPA consults with tribal officials early in the process of developing the proposed regulation and prepares a tribal summary impact statement.

EPA has concluded that this proposed rule, if finalized, may have tribal implications because it will require emissions reductions of two pollutants by a major stationary source located and operating on the Navajo reservation. However, this proposed rule, if finalized, will neither impose substantial direct compliance costs on tribal governments nor pre-empt Tribal law because the proposed FIP imposes obligations only on the owners or operator of the Four Corners Power Plant.

EPA has consulted with officials of the Navajo Nation in the process of developing this proposed FIP. EPA had an in-person meeting with Tribal representatives prior to the proposal and will continue to consult with Tribal officials during the public comment period on the proposed FIP. In addition, EPA provided Navajo Nation and other tribal governments additional time to submit formal comments on our Advanced Notice of Proposed Rulemaking. Several tribes, including the Navajo, submitted comments which EPA considered in developing this NPR. Therefore, EPA has allowed the Navajo Nation to provide meaningful and timely input into the development of this proposed rule and will continue to consult with the Navajo Nation and other affected Tribes prior to finalizing our BART determination.

G. Executive Order 13045: Protection of Children From Environmental Health Risks and Safety Risks

Executive Order 13045: Protection of Children from Environmental Health Risks and Safety Risks (62 FR 19885, April 23, 1997), applies to any rule that: (1) is determined to be economically significant as defined under Executive Order 12866, and (2) concerns an environmental health or safety risk that EPA has reason to believe may have a disproportionate effect on children. If the regulatory action meets both criteria, the Agency must evaluate the environmental health or safety effects of the planned rule on children, and

[14] "Representatives of State and local governments" include non-elected officials of State and local governments and any representative national organizations not listed in footnote 3.

explain why the planned regulation is preferable to other potentially effective and reasonably feasible alternatives considered by the Agency.

This proposed rule is not subject to Executive Order 13045 because it requires emissions reductions of two pollutants from a single stationary source. Because this proposed action only applies to a single source and is not a proposed rule of general applicability, it is not economically significant as defined under Executive Order 12866, and does not have a disproportionate effect on children. However, to the extent that the rule will reduce emissions of PM and NO_X, which contributes to ozone formation, the rule will have a beneficial effect on children's health by reducing air pollution that causes or exacerbates childhood asthma and other respiratory issues.

H. Executive Order 13211: Actions Concerning Regulations That Significantly Affect Energy Supply, Distribution, or Use

This action is not subject to Executive Order 13211 (66 FR 28355 (May 22, 2001)), because it is not a significant regulatory action under Executive Order 12866.

I. National Technology Transfer and Advancement Act

Section 12(d) of the National Technology Transfer and Advancement Act of 1995 (NTTAA), Public Law 104–113, 12 (10) (15 U.S.C. 272 note) directs EPA to use voluntary consensus standards (VCS) in its regulatory activities unless to do so would be inconsistent with applicable law or otherwise impractical. VCS are technical standards (*e.g.,* materials specifications, test methods, sampling procedures and business practices) that are developed or adopted by the VCS bodies. The NTTAA directs EPA to provide Congress, through annual reports to OMB, with explanations when the Agency decides not to use available and applicable VCS.

Consistent with the NTTAA, the Agency conducted a search to identify potentially applicable VCS. For the measurements listed below, there are a number of VCS that appear to have possible use in lieu of the EPA test methods and performance specifications (40 CFR Part 60, Appendices A and B) noted next to the measurement requirements. It would not be practical to specify these standards in the current proposed rulemaking due to a lack of sufficient data on equivalency and validation and because some are still under development. However, EPA's Office of Air Quality Planning and Standards is in the process of reviewing all available VCS for incorporation by reference into the test methods and performance specifications of 40 CFR Part 60, Appendices A and B. Any VCS so incorporated in a specified test method or performance specification would then be available for use in determining the emissions from this facility. This will be an ongoing process designed to incorporate suitable VCS as they become available. EPA is requesting comment on other appropriate VCS for measuring opacity or emissions of PM and NO_X.

Particulate Matter Emissions—EPA Methods 1 though 5.

Opacity—EPA Method 9 and Performance Specification Test 1 for Opacity Monitoring.

NO_X Emissions—Continuous Emissions Monitors.

J. Executive Order 12898: Federal Actions To Address Environmental Justice in Minority Populations and Low-Income Populations

Executive Order 12898 (59 FR 7629, February 16, 1994), establishes federal executive policy on environmental justice. Its main provision directs federal agencies, to the greatest extent practicable and permitted by law, to make environmental justice part of their mission by identifying and addressing, as appropriate, disproportionately high and adverse human health or environmental effects of their programs, policies, and activities on minority populations and low-income populations in the United States.

EPA has determined that this proposed rule, if finalized, will not have disproportionately high and adverse human health or environmental effects on minority or low-income populations because it increases the level of environmental protection for all affected populations without having any disproportionately high and adverse human health or environmental effects on any population, including any minority or low-income population. This proposed rule requires emissions reductions of two pollutants from a single stationary source, Four Corners Power Plant.

List of Subjects in 40 CFR Part 49

Environmental protection, Administrative practice and procedure, Air pollution control, Indians, Intergovernmental relations, Reporting and recordkeeping requirements.

Dated: October 6, 2010.

Jared Blumenfeld,

Regional Administrator, Region IX.

Title 40, chapter I of the Code of Federal Regulations is proposed to be amended as follows:

PART 49—[AMENDED]

1. The authority citation for part 49 continues to read as follows:

Authority: 42 U.S.C. 7401, *et seq.*

2. Section 49.23 is amended by adding paragraphs (i) and (j) to read as follows:

§ 49.23 Federal Implementation Plan Provisions for Four Corners Power Plant, Navajo Nation.

* * * * *

(i) Regional Haze Best Available Retrofit Technology limits for this plant are in addition to the requirements in paragraphs (a) through (h) of this section. All definitions and testing and monitoring methods of this section apply to the limits in paragraph (i) of this section except as indicated in paragraphs (i)(1) through (4) of this section. Within 180 days of the effective date of this paragraph (i), the owner or operator shall submit a plan to the Regional Administrator that identifies the control equipment and schedule for complying with this paragraph (i). The owner or operator shall amend and submit this amended plan to the Regional Administrator as changes occur. The interim limits for each unit shall be effective 180 days after re-start of the unit after installation of SCR controls for that unit and until the plant-wide limit goes into effect. The plant-wide NO_X limit shall be effective no later than 5 years after the effective date of this rule. APS may elect to meet the plant-wide limit early to remove the individual unit limits. Particulate limits for Units 1, 2, and 3 shall be effective 180 days after re-start of the units after installation of the PM controls but no later than 5 years after the effective date of this paragraph (i). Particulate limits for Units 4 and 5 shall be effective 180 days after re-start of the units after installation of the SCR controls.

(1) Particulate Matter for units 1, 2, and 3 shall be limited to 0.012 lb/MMBtu for each unit as measured by the average of 3 test runs with each run collecting a minimum of 60 dscf of sample gas and with a duration of at least 120 minutes. Sampling shall be performed according to 40 CFR Part 60 Appendices A–1 through A–3, Methods 1 through 4 and Method 5 or Method 5e. The averaging time for any other demonstration of the Particulate Matter compliance or exceedence shall be

based on a 6 hour average. Particulate testing shall be performed annually as required by paragraph (e)(3) of this section. This test with 2 hour test runs may be substituted and used to demonstrate compliance with the particulate limits in paragraph (d)(2) of this section.

(2) Particulate Matter from units 4 and 5 shall be limited to 0.015 lb/MMbtu for each unit as measured by the average of 3 test runs with each run collecting a minimum of 60 dscf of sample gas and with a duration of at least 120 minutes. Sampling shall be performed according to 40 CFR Part 60 Appendices A–1 through A–3, Methods 1 through 4 and Method 5 or Method 5e. The averaging time for any other demonstration of the particulate matter compliance or exceedence shall be based on a 6 hour average.

(3) No owner or operator shall discharge or cause the discharge of emissions from the stacks of Units 1, 2, 3, 4 or 5 into the atmosphere exhibiting greater than 10% opacity, excluding uncombined water droplets, averaged over any six (6) minute period.

(4) Plantwide nitrogen oxide emission limits.

(i) The plantwide nitrogen oxide limit, expressed as nitrogen dioxide, shall be 0.11 lb/MMbtu as averaged over a rolling 30 calendar day period. NO_2 emissions for each calendar day shall be determined by summing the hourly emissions measured in pounds of NO_2 for all operating units. Heat input for each calendar day shall be determined by adding together all hourly heat inputs, in millions of BTU, for all operating units. Each day the thirty day rolling average shall be determined by adding together that day and the preceding 29 days pounds of NO_2 and dividing that total pounds of NO_2 by the sum of the heat input during the same 30 day period. The results shall be the 30 day rolling pound per million BTU emissions of NO_X.

(ii) The interim NO_X limit for each individual boiler with SCR control shall be as follows:

(A) Unit 1 shall meet a rolling 30 calendar day NO_X limit of 0.21 lb/MMBtu,

(B) Unit 2 shall meet a rolling 30 calendar day limit of 0.17 lb/MMBtu,

(C) Unit 3 shall meet a rolling 30 calendar day limit of 0.16 lb/MMBtu,

(D) Units 4 and 5 shall meet a rolling 30 calendar day limit of 0.11 lb/MMBtu, each.

(iii) Testing and monitoring shall use the 40 CFR part 75 monitors and meet the 40 CFR part 75 quality assurance requirements. In addition to these 40 CFR part 75 requirements, relative accuracy test audits shall be performed for both the NO_2 pounds per hour measurement and the heat input measurement. These shall have relative accuracies of less than 20%. This testing shall be evaluated each time the 40 CFR part 75 monitors undergo relative accuracy testing.

(iv) If a valid NO_X pounds per hour or heat input is not available for any hour for a unit, that heat input and NO_X pounds per hour shall not be used in the calculation of the 30 day plant wide rolling average.

(v) Upon the effective date of the plantwide NO_X average, the owner or operator shall have installed CEMS and COMS software that complies with the requirements of this section.

(j) Dust. Each owner or operator shall operate and maintain the existing dust suppression methods for controlling dust from the coal handling and ash handling and storage facilities. Within ninety (90) days after promulgation of this paragraph (j), the owner or operator shall develop a dust control plan and submit the plan to the Regional Administrator. The owner or operator shall comply with the plan once the plan is submitted to the Regional Administrator. The owner or operator shall amend the plan as requested or needed. The plan shall include a description of the dust suppression methods for controlling dust from the coal handling and storage facilities, ash handling, storage and landfilling, and road sweeping activities. Within 18 months of promulgation of this paragraph (j) each owner or operator shall not emit dust with opacity greater than 20 percent from any crusher, grinding mill, screening operation, belt conveyor, or truck loading or unloading operation.

[FR Doc. 2010–26262 Filed 10–18–10; 8:45 am]

BILLING CODE 6560–50–P

ENVIRONMENTAL PROTECTION AGENCY

40 CFR Part 52

[EPA–R06–OAR–2005–TX–0031; FRL–9215–1]

Approval and Promulgation of Air Quality Implementation Plans; Texas; Revisions to Rules and Regulations for Control of Air Pollution; Permitting of Grandfathered and Electing Electric Generating Facilities

AGENCY: Environmental Protection Agency (EPA).

ACTION: Proposed rule.

SUMMARY: The EPA is proposing to partially approve and partially disapprove revisions of the Texas State Implementation Plan (SIP) submitted by the Texas Commission on Environmental Quality (TCEQ, or Commission) on January 3, 2000, and July 31, 2002, as supplemented on August 5, 2009. These revisions are to regulations of the TCEQ which relate to application and permitting procedures for grandfathered electric generating facilities (EGFs). The revisions address a mandate by the Texas Legislature under Senate Bill 7 to achieve nitrogen oxide (NO_X), sulfur dioxide (SO_2) and particulate matter (PM) emission reductions from grandfathered EGFs. These emissions reductions will contribute to achieving attainment and help ensure attainment and continued maintenance of the National Ambient Air Quality Standards (NAAQS) for ozone, sulfur dioxide, and particulate matter in the State of Texas. As a result of these mandated emissions reductions, in accordance with section 110(l) of the Federal Clean Air Act, as amended (the Act, or CAA), partial approval of these revisions will not interfere with attainment of the NAAQS, reasonable further progress, or any other applicable requirement of the Act. EPA is proposing that the revisions, but for a severable provision, meet section 110, part C, and part D of the Federal Clean Air Act (the Act or CAA) and EPA's regulations. Therefore, EPA is proposing to approve the revisions but for a severable portion that allows collateral emissions increases of carbon monoxide (CO) created by the imposition of technology controls to be permitted under the State's Standard Permit (SP) for Pollution Control Projects (PCP). EPA is proposing to disapprove this severable portion concerning the issuance of a PCP SP for the CO collateral emissions increases. EPA is taking comments on this proposal and plans to follow with a final action.

DATES: Written comments must be received on or before November 18, 2010.

ADDRESSES: Submit your comments, identified by Docket No. R06–OAR–2005–TX–0031, by one of the following methods:

- *Federal eRulemaking Portal: http://www.regulations.gov.*
- Follow the on-line instructions for submitting comments.
- *U.S. EPA Region 6* "*Contact Us*" *Web site: http://epa.gov/region6/r6comment.htm.* Please click on "6PD (Multimedia)" and select "Air" before submitting comments.

• *E-mail:* Mr. Rick Barrett at: *barrett.richard@epa.gov.* Please also send a copy by e-mail to the person listed in the **FOR FURTHER INFORMATION CONTACT** section below.

• *Fax:* Mr. Rick Barrett, Air Permits Section (6PD–R), at fax number 214–665–7263.

• *Mail:* Mr. Rick Barrett, Air Permits Section (6PD–R), Environmental Protection Agency, 1445 Ross Avenue, Suite 1200, Dallas, Texas 75202–2733.

• *Hand or Courier Delivery:* Mr. Rick Barrett, Air Permits Section (6PD–R), Environmental Protection Agency, 1445 Ross Avenue, Suite 1200, Dallas, Texas 75202–2733. Such deliveries are accepted only between the hours of 8 a.m. and 4 p.m. weekdays except for legal holidays. Special arrangements should be made for deliveries of boxed information.

Instructions: Direct your comments to Docket No. EPA–R06–OAR–2005–TX–0031. EPA's policy is that all comments received will be included in the public docket without change and may be made available online at *http://www.regulations.gov,* including any personal information provided, unless the comment includes information claimed to be Confidential Business Information (CBI) or other information the disclosure of which is restricted by statute. Do not submit information through *http://www.regulations.gov* or e-mail that you consider to be CBI or otherwise protected from disclosure. The *http://www.regulations.gov* Web site is an "anonymous access" system, which means EPA will not know your identity or contact information unless you provide it in the body of your comment. If you send an e-mail comment directly to EPA without going through *http://www.regulations.gov,* your e-mail address will be automatically captured and included as part of the comment that is placed in the public docket and made available on the Internet. If you submit an electronic comment, EPA recommends that you include your name and other contact information in the body of your comment and with any disk or CD–ROM you submit. If EPA cannot read your comment due to technical difficulties and cannot contact you for clarification, EPA may not be able to consider your comment. Electronic files should avoid the use of special characters, any form of encryption, and be free of any defects or viruses.

Docket: All documents in the docket are listed in the *http://www.regulations.gov* index. Although listed in the index, some information is not publicly available, *e.g.,* CBI or other information whose disclosure is restricted by statute. Certain other material, such as copyrighted material, will be publicly available only in hard copy. Publicly available docket materials are available either electronically in *http://www.regulations.gov* or in hard copy at the Air Permits Section (6PD–R), Environmental Protection Agency, 1445 Ross Avenue, Suite 700, Dallas, Texas 75202–2733. The file will be made available by appointment for public inspection in the Region 6 FOIA Review Room between the hours of 8:30 a.m. and 4:30 p.m. weekdays except for legal holidays. Contact the person listed in the **FOR FURTHER INFORMATION CONTACT** paragraph below or Mr. Bill Deese at 214–665–7253 to make an appointment. If possible, please make the appointment at least two working days in advance of your visit. There will be a 15 cent per page fee for making photocopies of documents. On the day of the visit, please check in at the EPA Region 6 reception area at 1445 Ross Avenue, Suite 700, Dallas, Texas.

The State submittal is also available for public inspection at the State Air Agency listedbelow during official business hours by appointment: Texas Commission on Environmental Quality, Office of Air Quality, 12124 Park 35 Circle, Austin, Texas 78753.

FOR FURTHER INFORMATION CONTACT: Mr. Rick Barrett, Air Permits Section (6PD–R), Environmental Protection Agency, Region 6, 1445 Ross Avenue, Suite 700, Dallas, Texas 75202–2733, telephone 214–665–7227; fax number 214–665–7263; *e-mail address: barrett.richard@epa.gov*.

SUPPLEMENTARY INFORMATION: Throughout this document "we," "our," and "us" refers to EPA.

Outline

I. Texas Senate Bill 7
II. What action is EPA proposing?
A. January 3, 2000 Submittal
B. July 31, 2002 Submittal
III. Why are we proposing to partially approve and partially disapprove this SIP submittal?
A. January 3, 2000 Submittal
B. July 31, 2002 Submittal
C. CAA 110(l) Analysis
IV. Proposed Action
V. Statutory and Executive Order Reviews

I. Texas Senate Bill 7

Texas Senate Bill 7 (SB 7), formed under the 76th Texas State Legislature, 1999, amended the Texas Utilities Code (TUC), Title 2, Public Utility Regulatory Act, Subtitle B, Electric Utilities, and created a new Texas Utilities Code Chapter 39, "Restructuring of Electric Utility Industry." SB 7 requires the TCEQ to establish a regulatory program implementing the statute's mandatory emissions reductions for "grandfathered facilities" under the Texas Utilities Code section 39.264. A "grandfathered facility" is one that existed at the time the Legislature amended the Texas Clean Air Act (TCAA) in 1971.

These facilities were not required to comply with (i.e., grandfathered from) the then new requirement to obtain permits for construction or modifications of facilities that emit air contaminants. Texas began permitting new and modified sources in 1971, and sources built before Texas' permitting rules became effective were not required to obtain permits for air emissions as long as they were not modified as defined under Texas' New Source Review SIP program.

Section 39.264 of the TUC now requires EGFs that existed on January 1, 1999, to obtain a permit from the Commission even though these sources were not previously required to obtain a permit under the TCAA, section 382.0518(g).

Section 39.264 of the TUC specifically requires owners or operators of grandfathered EGFs to apply for a permit to emit nitrogen oxides (NO_X) and, for coal-fired grandfathered EGFs, sulfur dioxide (SO_2) and particulate matter (PM) through opacity limitations. These applications were due on or before September 1, 2000. A grandfathered EGF that does not obtain a permit may not operate after May 1, 2003, unless the Commission finds good cause for an extension. Section 39.264 of the TUC requires that for the 12-month period beginning May 1, 2003, and for each 12-month period following, annual emissions of NO_X from grandfathered EGFs not exceed 50% of the NO_X emissions reported to the Commission for 1997. Furthermore, it requires that emissions of SO_2 from coal-fired grandfathered EGFs not exceed 75% of the SO_2 emissions reported to the Commission in 1997. In addition, TUC section 39.264(e) requires electric generating facility permits (EGFPs) for coal-fired, grandfathered EGFs to contain appropriate opacity limitations provided by the commission's rules in 30 Texas Administrative Code (TAC) Ch.111.111, "Requirements for Specified Sources." As described in more detail below, the emission limitations may be satisfied by using control technology or by participating in the banking and trading of allowances under Texas' Emission Banking and Trading of Allowances (EBTA) program.

Overall, SB 7 mandates specific pollution reduction in an area, while

allowing individual sources flexibility in how they meet emissions reductions. As participants in the program, EGFs must obtain a permit allocating them a certain level of emissions which they cannot exceed. In each defined region, the total level of emissions is restricted, or capped, to a level consistent with the SB 7 statutory goals. The individual EGF, to meet its allocated emissions level, can either choose to install pollution controls, shut down operations, or purchase allowances from another source that already reduced emission levels below its permitted amount.

To achieve SB 7's mandate, the TCEQ made revisions to 30 TAC Ch.116, "Control of Air Pollution by Permits for New Construction or Modification," by establishing an allowance and permitting program for regulating grandfathered EGFs under Subchapter I. TCEQ concurrently adopted Chapter 101, Subchapter H, "Emissions Banking and Trading," that establishes a regional cap and trade system to distribute emission allowances for use by EGFs. The new Division 2, Chapter 101, Subchapter H, concerning EBTA, sets out the allowance system to be used to assist grandfathered and electing EGFs in meeting the emission reduction requirements of TUC, section 39.264. Together, the two rules define categories of EGFs that are eligible to use the trading system. As discussed above, the first category consists of grandfathered facilities. The second category of EGFs consist of currently permitted EGFs that are not subject to the permitting requirements mandated by SB 7, yet elect to participate in the allowance trading system. These are referred to as "electing" EGFs and participation in the permitting program will allow electing EGFs to obtain allowances under the EBTA.

The purpose of the proposed rulemaking by EPA is to partially approve and partially disapprove the TCEQ's permit and emission control requirements for grandfathered and electing EGFs and related permit application, monitoring, reporting and public notice procedures. Specifically, the permit application requirements, methods for monitoring and reporting emissions and public notice procedures for grandfathered and electing EGFs are the subject of this proposal action. Please note that EPA's action on 30 TAC Chapter 101, Subchapter H, Division 2, concerning Emissions Banking and Trading of Allowances, is being proposed in a separate notice and is evaluated in a separate TSD. (RME Docket R06–OAR–2005–TX–0012).

The revisions to TCEQ's 30 TAC, Chapter 116, concerning the permitting of grandfathered EGFs, will achieve the Legislature's SB 7 emissions reductions goals. Compliance with these revisions will cause decreased air emissions of NO_X, SO_2, and PM, due to the shutdown of the source, participation in the EBTA, or installation of pollution controls on grandfathered sources that had previously been exempt from having to use pollution controls. Because the revisions will cause additional emission reductions from these sources, they will better serve to protect the public health and welfare. The revisions will also continue to contribute to improvement of air quality and attainment or maintenance of the federal air quality standards. Overall, these provisions serve to improve the existing SIP.

Lastly, these provisions meet the requirement in 40 CFR 51.160(a) that each plan include legally enforceable procedures to determine whether the construction or modification of a facility, building, structure, or installation, or combination of these will result in (1) A violation of applicable portions of the control strategy; or (2) interference with attainment or maintenance of a national standard in the State in which the proposed source (or modification) is located or in a neighboring State.

II. What action is EPA proposing?

We are proposing to partially approve and partially disapprove the revision to Title 30, Chapter 116, of the TAC submitted by the State of Texas on January 3, 2000. We are also proposing to fully approve the revision to Title 30, Chapter 116, of the TAC submitted by the State of Texas on July 31, 2002. The January 3, 2000 submittal concerns Subchapter A: "Definitions," section 116.18; and Subchapter I: "Electric Generating Facility Permits," sections 116.910–914, 116.916, 116.920–922, 116.930, and 116.931. We are proposing to fully approve all of this 2000 submittal but for the severable reference in 30 TAC 116.911(a)(2) that, if approved, would allow the use of a Texas PCP SP for the permitting of the CO collateral emissions increases. We are proposing to disapprove this reference in submitted 30 TAC 116.911(a)(2) allowing the use of a PCP SP for the collateral CO emissions. The July 31, 2002 submittal concerns Subchapter A: "Definitions," sections 116.10 and 116.18; and Subchapter I: "Electric Generating Facility Permits," sections 116.910, 116.911, 116.913, 116.917, 116.918, 116.921, 116.926, 116.928, and 116.930. The TCEQ adopted these revisions on December 16, 1999, and May 22, 2002, respectively.

Please note that in the July 31, 2002 submittal concerning Subchapter A: "Definitions," section 116.10 is severable and previously acted on as approvable in a separate rulemaking (see explanation below).

EPA intends to take final action on the submitted SB 7 SIP by December 31, 2010, as provided in the Consent Decree entered on January 21, 2010 in *BCCA Appeal Group* v. *EPA*, Case No. 3:08–cv–01491–N (N.D. Tex).

A. January 3, 2000 Submittal

In the January 3, 2000 submittal, TCEQ submitted new rules to Chapter 116, including Subchapter A: "Definitions," delineating certain definitions of words and terms used in Subchapter I; and Subchapter I: "Electric Generating Facility Permits," implementing the applicability requirements for grandfathered and electing electric generating facilities. Representative sections of Subchapter I include: 116.911, Electric Generating Facility Permit Application; 116.913, General and Special Conditions; 116.914, Emissions Monitoring and Reporting Requirements; and 116.921, Notice and Comment Hearings for Initial Issuance.

In 116.911, owners or operators of grandfathered or electing EGFs shall submit an application to TCEQ to authorize nitrogen oxides (NO_X) emissions and, if applicable, sulfur dioxide (SO_2) and particulate matter (PM) emissions before September 11, 2000. The section requires the application to specify various requirements under 116.911(a)(1)–(4), (b)(1)–(2), (c)–(d). Section 116.911 contains one subsection, 116.911(a)(2), "Control method," which references section 116.617, Standard Permits for Pollution Control Projects (PCPs). Under 116.911(a)(2), if an EGF permit applicant proposes the use of new control methods [1] in its initial application, then compliance with particular subsections in 116.617 is required and TCEQ may require air dispersion modeling or ambient monitoring. The Texas PCP SP is not part of the Texas NSR SIP. Moreover, EPA has proposed to disapprove it on September 23, 2009. See 74 FR 48467. Final action was signed on August 31, 2010, under the BCCA consent decree.

[1] TCEQ does not interpret "new control methods" to include the use of combustion techniques. Consequently, no PCP SP is required. Also, if a grandfathered facility chooses to impose add-on controls, this does not fall under the PCP SP requirement either. As a result, a PCP SP is required only for collateral emissions of CO.

Furthermore, the DC Circuit Court of Appeals issued a court decision, *New York* v. *EPA,* No. 02–1387 (June 24, 2005) that addressed the use of PCPs and disapproved their use for Major NSR requirements. In that decision, the court vacated the provisions of the 2002 NSR Reform rule that specifically related to Clean Units and Pollution Control Projects.

In response to the court's decision, EPA filed a Petition for Rehearing or Rehearing En Banc and Request for Clarification on August 8, 2005. In that Petition, EPA requested clarification that the court's ruling on PCP's applies only prospectively. On December 9, 2005, the DC Circuit ordered that "EPA's request for clarification as to any retroactive effect of the ruling on Pollution Control Projects be denied." The court also stated that because there was no specific retroactive application of this provision before the court, it was premature to rule on this request. Based on TCEQ's Technical Supplement, EPA believes that any collateral emissions increases due to controls installed to limit NO_X, SO_2 or PM under the submitted 30 TAC 911(a)(2) are above the significance level for Prevention of Significant Deterioration (PSD) review for CO collateral emissions increases only, and that these collateral CO increases are located at only two PCP SP permitted plants. Therefore, in only two instances were there collateral CO emissions increases that obtained a Texas PCP SP rather than a Major NSR SIP permit. They obtained their PCP SP before the court decision was issued. Furthermore, based upon the Technical Supplement, EPA believes that all of the resultant collateral CO increases across the State of Texas (including those from the two plants) do not interfere with attainment or maintenance of the NAAQS for CO, *et al.,* nor cause or contribute to increase in PSD increments, much less a violation of any NAAQS. Nevertheless, based on the above court decision and the PCP SP not being part of the Texas NSR SIP, the submitted subsection 116.911(a)(2) is not approvable, and therefore we are proposing to disapprove this submitted subsection for collateral increases of CO emissions. Note that the entire State of Texas is currently in attainment for CO.

Section 116.913 contains general conditions applicable to every EGF permit, and allows the TCEQ to include special conditions in individual permits. Under 116.913, an EGF permit authorizes nitrogen oxides (NO_X) emissions from all grandfathered or electing electric generating facilities (EGF); and sulfur dioxide (SO_2) emissions and particulate matter emissions, through opacity limitations, for coal-fired grandfathered or electing EGFs. The grandfathered or electing EGF must comply with Chapter 101, Subchapter H, Division 2 of this title, relating to EBTA, including the requirement to maintain allowances in a compliance account. Facilities subject to the EBTA shall quantify and report emissions using the monitoring and reporting requirements of section 116.914. As noted previously, EPA's action on Chapter 101, Subchapter H, Division 2, is being proposed in a separate action (RME Docket R06–OAR–2005–TX–0012).

Section 116.914, specifies the monitoring and reporting requirements for EGFPs. The rule authorizes the use of Continuous Emission Monitoring (CEM) under the Acid Rain Program, which contains monitoring requirements for SO_2 for affected units. Since the acid rain program already requires extensive monitoring, this section authorizes the use of that monitoring for EGF's that are subject to the acid rain program for compliance with Subchapter I. EGFs not subject to the Acid Rain Program would have three choices in monitoring: the EGF may choose to meet either the Part 75 monitoring requirements, or the requirements of Title 40 CFR part 60; or, the EGF may provide an alternative monitoring plan that would be incorporated into the permit conditions. This alternate monitoring plan must meet state and federal requirements for approval. Monitoring and reporting requirements provisions related to the EBTA rule are set forth in section101.336(a), per 30 TAC Chapter 116.914.

Section 116.921 contains the hearing requirements for the initial issuance of EGFPs. If a hearing is requested by a person who may be affected by emissions from the grandfathered or electing EGF, and that request is reasonable, the commission will hold a hearing. The section requires that notice of hearing on a draft EGFP be published in the public notice section of one issue of a newspaper of general circulation in the municipality or the nearest municipality where the EGF is located. The notice must be published at least 30 days prior to a hearing.

The State of Texas submitted the SIP revision to EPA after adequate notice and public hearing on January 3, 2000. The Technical Supplement was submitted on August 5, 2009. *See* our Technical Support Document, Attachment C, for more details.

B. July 31, 2002 Submittal

In the July 31, 2002 submittal, Texas submitted new and amended rules to Chapter 116, which include Subchapter A: "Definitions," delineating certain definitions of words and terms used in Subchapter I; Subchapter H: "Permits for Grandfathered Facilities," Division 1, "General Applicability;" Division 2, "Small Business Stationary Source Permits," "Pipeline Facilities Permits," and "Existing Facility Permits;" Division 3, "Existing Facility Flexible Permits;" and Subchapter I: "Electric Generating Facility Permits." In addition, Texas submitted TAC Chapter 39, "Public Notice," which includes Subchapter H: "Applicability and General Provisions," and Subchapter K: "Public Notice of Air Quality Applications."

EPA is acting only on Subchapter A: "Definitions," and Subchapter I: "Electric Generating Facility Permits" of Chapter 116 from the July 31, 2002 submittal. The above-referenced provisions contained in the Subchapter H of Ch. 116 and the Subchapter K of Chapter 39 are severable and not part of today's proposal action. Other revisions to Ch.116 establish requirements and procedures in Subchapter H for the permitting of grandfathered facilities in accordance with 5.02–5.04 of House Bill (HB) 2912, 77th Legislature, 2001, and Section 78 of HB 2914, 77th Legislature, 2001, which establishes an incentive program for the reduction of emissions of nitrogen oxides from certain grandfathered reciprocating internal combustion engines associated with pipelines. These severable submittals will be acted on in separate rulemakings.

The submitted amendments to Subchapter A, Section 116.10, "General Definitions," revise the definition of "grandfathered facility" to be consistent with TCAA, section 382.0518(g). The revised definition clarifies that a grandfathered facility is one that is not a new facility, was constructed prior to August 30, 1971 (or no construction contract was executed on or before August 30, 1971 that specified a beginning construction date on or before February 29, 1972) and has not been modified since August 30, 1971. This definition is severable and previously acted on as approvable in a separate rulemaking (*See* 75 FR 19468, April 14, 2010). Therefore, it now is part of the Texas NSR SIP already.

The submitted amendments to Subchapter A, Section 116.18, "Electric Generating Facility Permits Definitions," add a definition for "natural gas-fired electric generating facility" for consistency only with the EGF permit

requirements of HB 2912. HB 2912 provides that a natural gas fired EGF includes a facility that was designed to burn both natural gas and fuel oil. The amendments also include a definition for "normal annual operating schedule," to establish the normal annual operating schedule at an EGF site.

The submitted amendments to Subchapter I, Electric Generating Facility Permits, implement the portions of TCAA, section 382.0518, which create a new EGF permit. Representative sections of Subchapter I include: 116.911, Electric Generating Facility Permit Application; 116.913, General and Special Conditions; 116.917, Electric Generating Facility Permit Application for Certain Grandfathered Coal-Fired Electric Generating Facilities and Certain Grandfathered Facilities Located at Electric Generating Facility Sites; and 116.918, Additional General and Special Conditions for Grandfathered Coal-Fired Electric Generating Facilities and Certain Grandfathered Facilities Located at Electric Generating Facility Sites.

Under amended section 116.911, Electric Generating Facility Permit Application, a new EGF permit will allow the owners or operators of EGFs who have already applied for a permit required by SB 7 to apply for a permit for: (1) Generators that do not generate electric energy for compensation and are not used more than 10% of the annual operating schedule; and (2) auxiliary fossil-fuel-fired combustion facilities that do not generate electric energy and do not emit more than 100 tpy of any air contaminant. The adopted changes will also allow coal-fired EGFs which were required to apply for a permit under SB 7 to apply for an EGF permit for criteria pollutants other than NO_X, SO_2, and PM as it relates to opacity.

Section 116.913, General and Special Conditions, is amended to update the conditions of any permit issued under Subchapter I, including the pollutants or allowances that may be authorized for each permit, and the requirements of the SB 7 allowance trading program for the additional equipment which may be permitted under Subchapter I. The commission will issue a permit to these facilities.

Section 116.917, Electric Generating Facility Permit Application for Certain Grandfathered Coal-Fired Electric Generating Facilities and Certain Grandfathered Facilities Located at Electric Generating Facility Sites outlines the application requirements for grandfathered coal-fired EGFs which choose to permit their additional criteria pollutants, and the auxiliary generators and the additional combustion equipment which can now be permitted under Subchapter I. To be consistent with the current review process for permits and applicable federal requirements, 116.917 requires the owner or operator of a grandfathered facility applying for an EGF permit to demonstrate that the facility meets applicable federal New Source Performance Standards (NSPS) and National Emission Standard for Hazardous Air Pollutants (NESHAP). If applicable, facilities would be required to comply with PSD and nonattainment review as specified in Chapter 116, Subchapter B, New Source Review Permits.

Section 116.918, Additional General and Special Conditions for Grandfathered Coal-Fired Electric Generating Facilities and Certain Grandfathered Facilities Located at Electric Generating Facility Sites identifies some of the general and special conditions which may be included in any permit issued under the adopted section 116.917. The holders of a permit shall comply with all such conditions. General conditions include: Sampling requirements, equivalency of methods, recordkeeping, maximum allowable emission rates, maintenance of emission control, and compliance with rules. The holders of permits shall also comply with all special conditions contained in the permit document.

The State of Texas submitted the SIP revision to EPA after adequate notice and public hearing on July 31, 2002. See our Technical Support Document, Attachment B, for more details.

III. Why are we proposing to partially approve and partially disapprove the January 3, 2000 submittal and approve the July 31, 2002 SIP submittal?

A. January 3, 2000 Submittal

Regarding the January 3, 2000 submittal, it is the intent of SB 7 that for the 12-month period beginning May 1, 2003, and for each 12-month period following, annual emissions of NO_X from grandfathered EGFs not exceed 50% of the NO_X emissions reported to the Commission for 1997. Furthermore, it is the intent of the legislation that emissions of SO_2 from coal-fired EGFs not exceed 75% of the SO_2 emissions reported to the Commission in 1997, and to contain appropriate opacity limitations by way of permitting the emissions of particulate matter. These provisions will cause additional emission reductions and ensure better protection of public health and welfare, and improve the existing SIP. These provisions, with the exception of 116.911(a)(2) discussed above, meet the requirement in 40 CFR 51.160(a) that each plan include legally enforceable procedures to determine whether the construction or modification of a facility, building, structure, or installation, or combination of these will result in (1) A violation of applicable portions of the control strategy; or (2) interference with attainment or maintenance of a national standard in the State in which the proposed source (or modification) is located or in a neighboring State.

The revision also meets 40 CFR 51.160(e) by identifying a type of facility that will be subject to review under 40 CFR 51.160(a). In this case, TCEQ specifically identified grandfathered and electing electric generating facilities. See our Technical Support Document, Attachment A, for more details.

B. July 31, 2002 Submittal

Regarding the July 31, 2002 submittal, this rulemaking allows the owners or operators of previously grandfathered and electing EGFs who have already applied for a permit required by SB 7 to also obtain a permit for all air contaminants, certain generators and auxiliary fossil fuel fired combustion facilities The adopted changes will also allow coal fired EGFs which were required to apply for a permit under SB 7 to apply for an EGF permit for criteria pollutants other than NO_X, SO_2, and PM as it relates to opacity. The permits issued for these facilities are expected to result in reduced emissions of air contaminants and improved compliance with state and federal air pollution control requirements. Further, these permits should achieve better protection of public health and welfare, and improve the existing SIP. These provisions meet the requirement in 40 CFR 51.160(a) that each plan include legally enforceable procedures to determine whether the construction or modification of a facility, building, structure, or installation, or combination of these will result in (1) a violation of applicable portions of the control strategy; or (2) interference with attainment or maintenance of a national standard in the state in which the proposed source (or modification) is located or in a neighboring state.

The revision also meets 40 CFR 51.160(e) by identifying a type of facility that will be subject to review under 40 CFR 51.160(a). In this case, Texas specifically identified grandfathered and electing electric generating facilities. See our Technical Support Document, Attachment B, for more details.

C. CAA 110(l) Analysis

Each revision to an implementation plan submitted by a State under this Act shall be adopted by such State after reasonable notice and public hearing. The Administrator shall not approve a revision of a plan if the revision would interfere with any applicable requirement concerning attainment and reasonable further progress (as defined in section 171), or any other applicable requirement of this Act. EPA is proposing to approve these revisions because they improve the SIP in accordance with Section 110 of the Act. The reductions achieved through the SB7 program are throughout the State of Texas and include reducing precursors to ozone (NOx), SO2 emissions, and PM emissions. The NOx emissions reductions in certain regions of the State were assumed in Texas' ozone attainment demonstration plans and will provide benefits in reducing ozone concentrations in nonattainment areas and near nonattainment areas, as well as attainment areas. There are no SO2 nonattainment areas in Texas. The only PM–10 nonattainment area in Texas is the El Paso geographic area. Any reductions in PM10 emissions due to these revisions should contribute to attainment of the PM10 NAAQS in that area. Further, EPA believes that any collateral emissions increases in carbon dioxide (CO) due to controls installed to limit NOx do not interfere with attainment or maintenance of the NAAQS for CO, nor cause or contribute to increase in any PSD increments. Texas is also currently in attainment for CO. Further, the permitting of grandfathered sources will benefit the public due to reductions of air contaminants emitted from affected EGFs, and present the opportunity for public participation and comment in the permitting procedures for formerly grandfathered EGFs and other participating EGFs. The program establishes requirements, procedures, deadlines and responsibilities for EGF permit applications for facilities formerly exempt from permit requirements.

IV. Proposed Action

EPA is proposing to partially approve and partially disapprove revisions to the Texas SIP that include 30 TAC Chapter 116, Subchapter A: "Definitions," section 116.18; and Subchapter I: "Electric Generating Facility Permits," sections 116.910–914, 116.916, 116.920–922, 116.930, and 116.931, which Texas submitted on January 3, 2000.

EPA is proposing to approve all of the January 3, 2000, SIP revision submittal as part of the Texas NSR SIP but for 30 TAC 116.911(a)(2). EPA is proposing to disapprove the submitted severable 30 TAC 116.911(a)(2) for collateral emissions increases of CO that are allowed to be permitted under the Texas PCP SP.

Further, EPA is proposing to approve revisions to the Texas SIP that include 30 TAC Chapter 116, Subchapter A: "Definitions," section 116.18; and Subchapter I: "Electric Generating Facility Permits," sections 116.910, 116.911, 116.913, 116.917, 116.918, 116.921, 116.926, 116.928, and 116.930, which Texas submitted on July 31, 2002. We are proposing to take no action on Chapter 116, Subchapter H: "Permits for Grandfathered Facilities," which Texas submitted on July 31, 2002. The State understands that EPA will take future action on Subchapter H because it is independent from Subchapters A and I, and action is not necessary at this time.

The January 3, 2000 and July 31, 2002 submittals address the applicability and permitting requirements for grandfathered and electing electric generating facilities. The revisions will contribute to improvement in overall air quality in Texas. There will be no increase in ozone, SO2, and PM concentration levels because of approving the revisions. We have evaluated the State's submittal, determined that it meets the applicable requirements of the CAA and EPA air quality regulations, and is consistent with EPA policy.

V. Statutory and Executive Order Reviews

A. Executive Order 12866, Regulatory Planning and Review

This action is not a "significant regulatory action" under the terms of Executive Order 12866 (58 FR 51735, October 4, 1993) and is therefore not subject to review under the Executive Order.

B. Paperwork Reduction Act

This action does not impose an information collection burden under the provisions of the Paperwork Reduction Act, 44 U.S.C. 3501 *et seq.* because this proposed SIP disapproval under section 110 and subchapter I, part D of the Clean Air Act will not in-and-of itself create any new information collection burdens but simply disapproves certain State requirements for inclusion into the SIP. Burden is defined at 5 CFR 1320.3(b).

C. Regulatory Flexibility Act

The Regulatory Flexibility Act (RFA) generally requires an agency to conduct a regulatory flexibility analysis of any rule subject to notice and comment rulemaking requirements unless the agency certifies that the rule will not have a significant economic impact on a substantial number of small entities. Small entities include small businesses, small not-for-profit enterprises, and small governmental jurisdictions. For purposes of assessing the impacts of today's rule on small entities, small entity is defined as: (1) A small business as defined by the Small Business Administration's (SBA) regulations at 13 CFR 121.201; (2) a small governmental jurisdiction that is a government of a city, county, town, school district or special district with a population of less than 50,000; and (3) a small organization that is any not-for-profit enterprise which is independently owned and operated and is not dominant in its field.

After considering the economic impacts of today's proposed rule on small entities, I certify that this action will not have a significant impact on a substantial number of small entities. This rule does not impose any requirements or create impacts on small entities. This proposed SIP disapproval under section 110 and subchapter I, part D of the Clean Air Act will not in-and-of itself create any new requirements but simply disapproves certain State requirements for inclusion into the SIP. Accordingly, it affords no opportunity for EPA to fashion for small entities less burdensome compliance or reporting requirements or timetables or exemptions from all or part of the rule. The fact that the Clean Air Act prescribes that various consequences (*e.g.,* higher offset requirements) may or will flow from this disapproval does not mean that EPA either can or must conduct a regulatory flexibility analysis for this action. Therefore, this action will not have a significant economic impact on a substantial number of small entities.

We continue to be interested in the potential impacts of this proposed rule on small entities and welcome comments on issues related to such impacts.

D. Unfunded Mandates Reform Act

This action contains no Federal mandates under the provisions of Title II of the Unfunded Mandates Reform Act of 1995 (UMRA), 2 U.S.C. 1531–1538 "for State, local, or tribal governments or the private sector." EPA has determined that the proposed

disapproval action does not include a Federal mandate that may result in estimated costs of $100 million or more to either State, local, or tribal governments in the aggregate, or to the private sector. This action proposes to disapprove pre-existing requirements under State or local law, and imposes no new requirements. Accordingly, no additional costs to State, local, or tribal governments, or to the private sector, result from this action.

E. Executive Order 13132, Federalism

Executive Order 13132, entitled "Federalism" (64 FR 43255, August 10, 1999), requires EPA to develop an accountable process to ensure "meaningful and timely input by State and local officials in the development of regulatory policies that have federalism implications." "Policies that have federalism implications" is defined in the Executive Order to include regulations that have "substantial direct effects on the States, on the relationship between the national government and the States, or on the distribution of power and responsibilities among the various levels of government."

This action does not have federalism implications. It will not have substantial direct effects on the States, on the relationship between the national government and the States, or on the distribution of power and responsibilities among the various levels of government, as specified in Executive Order 13132, because it merely disapproves certain State requirements for inclusion into the SIP and does not alter the relationship or the distribution of power and responsibilities established in the Clean Air Act. Thus, Executive Order 13132 does not apply to this action.

F. Executive Order 13175, Coordination With Indian Tribal Governments

This action does not have tribal implications, as specified in Executive Order 13175 (59 FR 22951, November 9, 2000), because the SIP EPA is proposing to disapprove would not apply in Indian country located in the State, and EPA notes that it will not impose substantial direct costs on tribal governments or preempt tribal law. Thus, Executive Order 13175 does not apply to this action.

G. Executive Order 13045, Protection of Children From Environmental Health Risks and Safety Risks

EPA interprets Executive Order 13045 (62 FR 19885, April 23, 1997) as applying only to those regulatory actions that concern health or safety risks, such that the analysis required under section 5–501 of the Executive Order has the potential to influence the regulation. This action is not subject to Executive Order 13045 because it is not an economically significant regulatory action based on health or safety risks subject to Executive Order 13045 (62 FR 19885, April 23, 1997). This proposed SIP disapproval under section 110 and subchapter I, part D of the Clean Air Act will not in-and-of itself create any new regulations but simply disapproves certain State requirements for inclusion into the SIP.

H. Executive Order 13211, Actions That Significantly Affect Energy Supply, Distribution, or Use

This proposed rule is not subject to Executive Order 13211 (66 FR 28355, May 22, 2001) because it is not a significant regulatory action under Executive Order 12866.

I. National Technology Transfer and Advancement Act

Section 12(d) of the National Technology Transfer and Advancement Act of 1995 ("NTTAA"), Public Law 104–113, section 12(d) (15 U.S.C. 272 note) directs EPA to use voluntary consensus standards in its regulatory activities unless to do so would be inconsistent with applicable law or otherwise impractical. Voluntary consensus standards are technical standards (*e.g.,* materials specifications, test methods, sampling procedures, and business practices) that are developed or adopted by voluntary consensus standards bodies. NTTAA directs EPA to provide Congress, through OMB, explanations when the Agency decides not to use available and applicable voluntary consensus standards.

The EPA believes that this action is not subject to requirements of Section 12(d) of NTTAA because application of those requirements would be inconsistent with the Clean Air Act.

J. Executive Order 12898: Federal Actions To Address Environmental Justice in Minority Populations and Low-Income Populations

Executive Order 12898 (59 FR 7629 (Feb. 16, 1994)) establishes federal executive policy on environmental justice. Its main provision directs federal agencies, to the greatest extent practicable and permitted by law, to make environmental justice part of their mission by identifying and addressing, as appropriate, disproportionately high and adverse human health or environmental effects of their programs, policies, and activities on minority populations and low-income populations in the United States.

EPA lacks the discretionary authority to address environmental justice in this proposed action. In reviewing SIP submissions, EPA's role is to approve or disapprove state choices, based on the criteria of the Clean Air Act. Accordingly, this action merely proposes to disapprove certain State requirements for inclusion into the SIP under section 110 and subchapter I, part D of the Clean Air Act and will not in-and-of itself create any new requirements. Accordingly, it does not provide EPA with the discretionary authority to address, as appropriate, disproportionate human health or environmental effects, using practicable and legally permissible methods, under Executive Order 12898.

List of Subjects in 40 CFR Part 52

Environmental protection, Air pollution control, Carbon monoxide, Intergovernmental relations, Nitrogen oxides, Nonattainment, Ozone, Particulate matter, Reporting and recordkeeping requirements, Sulfur dioxide.

Authority: 42 U.S.C. 7401 *et seq.*

Dated: October 8, 2010.

Lawrence E. Starfield,

Acting Regional Administrator, Region 6.

[FR Doc. 2010–26259 Filed 10–18–10; 8:45 am]

BILLING CODE 6560–50–P

ENVIRONMENTAL PROTECTION AGENCY

40 CFR Part 81

[Docket: EPA–R10–OAR–2010–0433; FRL–9214–8]

Determination of Attainment for PM_{10}: Eagle River PM_{10} Nonattainment Area, Alaska

AGENCY: Environmental Protection Agency (EPA).

ACTION: Proposed rule.

SUMMARY: EPA proposed to determine that the Eagle River nonattainment area in Alaska attained the National Ambient Air Quality Standard for particulate matter with an aerodynamic diameter of less than or equal to a nominal ten micrometers (PM_{10}) as of December 31, 1994.

DATES: Comments must be received on or before November 18, 2010.

ADDRESSES: Submit your comments, identified by Docket ID No. EPA–R10–OAR–2010–0433, by any of the following methods:

- *http://www.regulations.gov:* Follow the on-line instructions for submitting comments.

- *E-mail: vaupel.claudia@epa.gov.*
- *Mail:* Claudia Vergnani Vaupel, U.S. EPA Region 10, Office of Air, Waste and Toxics, AWT–107, 1200 Sixth Avenue, Suite 900, Seattle, WA 98101
- *Hand Delivery/Courier:* U.S. EPA Region 10, 1200 Sixth Avenue, Suite 900, Seattle, WA 98101. Attention: Claudia Vergnani Vaupel, Office of Air, Waste and Toxics, AWT–107. Such deliveries are only accepted during normal hours of operation, and special arrangements should be made for deliveries of boxed information.

Please see the direct final rule which is located in the Rules section of this **Federal Register** for detailed instructions on how to submit comments.

FOR FURTHER INFORMATION CONTACT: Claudia Vergnani Vaupel at telephone number: (206) 553–6121, e-mail address: *vaupel.claudia@epa.gov,* or the above EPA, Region 10 address.

SUPPLEMENTARY INFORMATION: For further information, please see the direct final action, of the same title, which is located in the Rules section of this **Federal Register**. EPA is approving the attainment determination as a direct final rule without prior proposal because EPA views this as a noncontroversial action and anticipates no adverse comments. A detailed rationale for the approval is set forth in the preamble to the direct final rule. If EPA receives no adverse comments, EPA will not take further action on this proposed rule.

If EPA receives adverse comments, EPA will withdraw the direct final rule and it will not take effect. EPA will address all public comments in a subsequent final rule based on this proposed rule. EPA will not institute a second comment period on this action. Any parties interested in commenting on this action should do so at this time. Please note that if we receive adverse comment on an amendment, paragraph, or section of this rule and if that provision may be severed from the remainder of the rule, EPA may adopt as final those provisions of the rule that are not the subject of an adverse comment.

Dated: October 7, 2010.

Dennis J. McLerran,

Regional Administrator, EPA Region 10.

[FR Doc. 2010–26257 Filed 10–18–10; 8:45 am]

BILLING CODE 6560–50–P

Notices

Federal Register

Vol. 75, No. 201

Tuesday, October 19, 2010

This section of the FEDERAL REGISTER contains documents other than rules or proposed rules that are applicable to the public. Notices of hearings and investigations, committee meetings, agency decisions and rulings, delegations of authority, filing of petitions and applications and agency statements of organization and functions are examples of documents appearing in this section.

DEPARTMENT OF AGRICULTURE

Forest Service

Umatilla National Forest, Walla Walla Ranger District; Oregon Tollgate Fuels Reduction Project

AGENCY: Forest Service, USDA.

ACTION: Notice of Intent to prepare an environmental impact statement.

SUMMARY: The Forest Service proposes fuels reduction on approximately 4,400 acres within the Upper 204/Tollgate Wildland Urban Interface (WUI) as set forth in the Umatilla County Community Wildfire Protection Plan (CWPP) as amended. This project was planned and will be implemented using Healthy Forest Restoration Act (HFRA) of 2004 authorities.

The Tollgate Fuels Reduction project is located in Umatilla and Union Counties, Oregon and the project planning area encompasses over 46,000 acres. The project planning area is approximately 40 miles south/southwest of Walla Walla, Washington.

The proposed fuels treatments will seek to reduce standing and down fuels, improve area evacuation routes, improve firefighter/public safety and protect local infrastructure. Fuel reduction efforts will be completed through commercial timber harvest (3,050 acres) and non-commercial thinning (1,350 acres). Timber harvest would generally focus on the removal of small diameter trees; however, larger trees may be removed as necessary to meet project objectives. Activities within the Lookingglass Inventoried Roadless Area (IRA) would include ground and ladder fuel reduction through the removal of standing (live and dead) trees and dead and down material. These activities would occur adjacent to private property and FR 64. No activities will occur in the North Fork Umatilla Wilderness or the Walla Walla River Inventoried Roadless Area.

Development and implementation of these actions will be conducted in accordance with the Healthy Forest Restoration Act (HFRA), National Forest Management Act (NFMA), National Environmental Policy Act (NEPA), the Umatilla National Forest Land and Resource Management Plan and all other applicable laws and regulations.

DATES: Comments concerning the scope of the analysis must be received by November 18, 2010. The Draft EIS is expected to be filed with the Environmental Protection Agency (EPA) and be available to the public for review by May 2011. The Final EIS is scheduled to be completed by October 2011.

ADDRESSES: Send written comments to Michael Rassbach, District Ranger, Walla Walla Ranger District, 1415 W. Rose, Walla Walla, WA. Comments may also be sent via e-mail to *comments-pacificnorthwest-umatilla-wallawalla@fs.fed.us.,* or via facsimile to 509–522–6000.

It is important that reviewers provide their comments at such times and in such a way that they are useful to the Agency's preparation of the EIS. Therefore, comments should be provided prior to the close of the comment period and should clearly articulate the reviewer's concerns and contentions.

Comments received in response to this solicitation, including names and addresses of those who comment, will become part of the public record for this proposed action. Comments submitted anonymously will be accepted and considered; however, anonymous comments will not provide the respondent with standing to participate in subsequent administrative objection process or judicial review.

FOR FURTHER INFORMATION CONTACT: Kimpton Cooper, Environmental Coordinator, Walla Walla Ranger District, 1415 W. Rose, Walla Walla, WA 99362. He can be reached by phone at (509) 522–6290 or by e-mail at *kmcooper@fs.fed.us.*

Individuals who use telecommunication devices for the deaf (TDD) may call the Federal Information Relay Service (FIRS) at 1–800–877–8339 between 8 a.m. and 8 p.m., Eastern Time, Monday through Friday.

SUPPLEMENTARY INFORMATION:

Purpose and Need for Action

The Tollgate planning area is situated on a high plateau between the North Fork Umatilla Wilderness and the South Fork Walla Walla River. The Tollgate plateau is surrounded on all sides by very steep and deep canyons. The plateau area falls primarily into fire regime 4, based on species composition, and suggests the occurrence of mixed to high severity fire events with long return intervals. Private lands and in-holdings are adjacent to, and interspersed with National Forest System lands.

The Tollgate WUI is comprised of approximately 368 residences, 43 privately owned cabins under NFS special use permit, 4 NFS campgrounds, 6 trailheads, 1 ski area, 4 snowparks and other FS facilities. The area is one of the heaviest used recreation areas on the entire Umatilla NF. In addition, there are numerous non-recreation uses of the area. Important local and regional infrastructure (fiber optic lines, telephone lines, power transmission lines, and communication equipment) is interspersed throughout the WUI. Oregon State Highway 204 bisects the Tollgate community and provides a major transportation route, linking it to Elgin, OR in the south, and Milton-Freewater/Pendleton, OR in the north. Highway 204 also provides an important commercial shipping route that facilitates the flow of goods and services between Union and Umatilla counties.

Tollgate's geographic positioning, relative to large tracts of remote and inaccessible roadless and wilderness areas, makes for a uniquely positioned community, and is an important contributing factor to the area's overall need for treatment. In many cases, wilderness and roadless areas occur at higher elevations and are well removed, from communities. Tollgate however sits above large tracts of both roadless and wilderness areas. Wildfires can initiate in these remote places, gain intensity, and ultimately emerge onto the plateau.

An accounting of the condition of existing vegetation within the analysis area has shown that these stands are very receptive to the initiation of high severity crown fire. The stands are also likely to sustain high severity crown fire that may emerge from the surrounding wilderness and roadless areas. Field reconnaissance of each prospective unit

was performed, and showed that the structure, composition, arrangement, and dynamics of the present vegetation indicate an area highly susceptible to experiencing severe fire events.

A strong need for treatment exists. A community, important infrastructure and a major transportation corridor represent values that are at risk. The area's infrastructure is located above, and in the path of major fire travel routes. The community is situated amongst vegetation that is poised to burn with severity.

It is unlikely that high severity fire events can be stopped from occurring in fire regime 4; however, through the implementation of fuels reduction treatments property, infrastructure, and lives may be more effectively protected. Treatments resulting in modified fuel configurations in strategic locations can lessen the impacts of a major fire event to the people, infrastructure, and travel routes within Tollgate.

The following project objectives were identified based on the intent of the 2004 Healthy Forest Restoration Act, the Umatilla County CWPP, and goals brought forth through public collaborative efforts:

- Lower fire hazard, by reducing overall fuel load and reducing the vertical and horizontal continuity of fuels within the project planning area.
- Improve protection to adjacent private lands and public/private infrastructure from a wildfire event.
- Provide safe egress of local residents and safe ingress/egress for firefighters during wildfire events.
- Effect immediate change in fire behavior within the Tollgate WUI by reducing fuels and creating strategic fuel breaks.

Proposed Action

The Forest Service proposes to conduct fuels reduction activities on approximately 4,400 acres within the Tollgate project planning area. Fuel reduction efforts would be implemented through the use of commercial timber harvest (3,050 acres) and non-commercial thinning (1,350 acres). Fuel reduction prescriptions include crown reduction, dead and down material removal, and ladder fuel reduction.

The project also includes fuel reduction activities in three (3) Riparian Habitat Conservation Areas (RHCAs) of strategic importance. There are treatments proposed along Oregon State Highway 204, designed to improve the defensibility of this important travel corridor. Treatments are also proposed within the Lookingglass Inventoried Roadless Area (IRA). The proposed treatments are targeted on the edge of IRA boundary where it coincides with private inholdings and Forest Road 6400. No actions are proposed within either the North Fork Umatilla Wilderness or Walla Walla River Inventoried Roadless Area.

Responsible Official

Walla Walla District Ranger.

Nature of Decision To Be Made

The responsible official will decide:

(1) Whether fuels reduction activities should occur, and if so, how much, when and where.

(2) What monitoring and mitigation measures should be taken or are needed.

Scoping Process

This notice of intent initiates the scoping process, which guides the development of the environmental impact statement.

It is important that reviewers provide their comments at such times and in such manner that they are useful to the agency's preparation of the environmental impact statement. Therefore, comments should be provided prior to the close of the comment period and should clearly articulate the reviewer's concerns and contentions.

A public meeting will be held on Thursday, November 4, 2010 at 6 pm. The meeting will be held at the Tollgate Trailfinders Clubhouse located off OR Hwy. 204. The clubhouse is adjacent to the Tollgate store and across from the Tamarack Inn. All interested members of the public are welcome to attend. For more information about this meeting, please contact Kimpton Cooper using the contact information listed above.

It should be noted that HFRA set up a pre-decisional objection process. Individual wishing to have standing to participate in the objection process must submit written comments either at this time (public scoping) or during the comment period for the Draft EIS.

Dated: October 12, 2010.

Michael Rassbach,

District Ranger.

[FR Doc. 2010–26223 Filed 10–18–10; 8:45 am]

BILLING CODE 3410–11–P

DEPARTMENT OF AGRICULTURE

Forest Service

Wrangell-Petersburg Resource Advisory Committee

AGENCY: Forest Service, USDA.

ACTION: Notice of meeting.

SUMMARY: The Wrangell-Petersburg Resource Advisory Committee will meet in Wrangell, Alaska. The committee is meeting as authorized under the Secure Rural Schools and Community Self-Determination Act (Pub. L. 10–343) and in compliance with the Federal Advisory Committee Act. The purpose of the meeting is to review project proposals and make project funding recommendations.

DATES: The meeting will be held Friday, October 29th from 8 a.m. to 2 p.m., and on Saturday, October 30th from 7:30 a.m. to 9 a.m.

ADDRESSES: The meeting will be held at the James and Elsie Nolan Center in Wrangell, Alaska. Written comments should be sent to Christopher Savage, Petersburg District Ranger, P.O. Box 1328, Petersburg, Alaska 99833, or Robert Dalrymple, Wrangell District Ranger, P.O. Box 50, Wrangell, AK 99929. Comments may also be sent via e-mail to *csavage@fs.fed.us,* or via facsimile to 907–772–5995.

All comments, including names and addresses when provided, are placed in the record and are available for public inspection and copying. The public may inspect comments received at the Petersburg Ranger District office at 12 North Nordic Drive or the Wrangell Ranger District office at 525 Bennett Street during regular office hours (Monday through Friday 8 a.m.–4:30 p.m.).

FOR FURTHER INFORMATION CONTACT: Christopher Savage, Petersburg District Ranger, P.O. Box 1328, Petersburg, Alaska 99833, phone (907) 772–3871, e-mail *csavage@fs.fed.us,* or Robert Dalrymple, Wrangell District Ranger, P.O. Box 51, Wrangell, AK 99929, phone (907) 874–2323, e-mail *rdalrymple@fs.fed.us.*

Individuals who use telecommunication devices for the deaf (TDD) may call the Federal Information Relay Service (FIRS) at 1–800–877–8339 between 8 a.m. and 8 p.m., Eastern Standard Time, Monday through Friday.

SUPPLEMENTARY INFORMATION: The meeting is open to the public. The following business will be conducted: Evaluation of project proposals and recommendation of projects for funding. Persons who wish to bring related matters to the attention of the Committee may file written statements with the Committee staff before or after the meeting. A public input session will be provided beginning at 1 p.m. on October 29th and 8 a.m. on October 30th.

Dated: October 12, 2010.

Christopher S. Savage,

District Ranger.

[FR Doc. 2010–26227 Filed 10–18–10; 8:45 am]

BILLING CODE 3410–11–P

DEPARTMENT OF COMMERCE

Submission for OMB Review; Comment Request

The Department of Commerce will submit to the Office of Management and Budget (OMB) for clearance the following proposal for collection of information under the provisions of the Paperwork Reduction Act (44 U.S.C. Chapter 35).

Agency: National Telecommunications and Information Administration (NTIA).

Title: NTIA/FCC Web-Based Frequency Coordination System.

OMB Control Number: 0660–0018.

Agency Form Number: N/A.

Type of Request: Regular submission (extension of a currently approved information collection).

Burden Hours: 750.

Average Time per Response: 15 minutes.

Number of Respondents: 3,000.

Needs and Uses: The National Telecommunications and Information Administration (NTIA) hosts a Web-based system that collects specific identification information (*e.g.,* company name, location and projected range of the operation, *etc.*) from applicants seeking to operate in existing and planned radio frequency (RF) bands that are shared on a co-primary basis by Federal and non-Federal users. The Web-based system provides a means for non-Federal applicants to rapidly determine the availability of RF spectrum in a specific location, or a need for detailed frequency coordination of a specific newly proposed assignment within the shared portions of the radio spectrum; and replaced the manual RF assignment process used by the Federal Communications Commission and NTIA. The system helps expedite the coordination process for non-federal applicants while assuring protection of government data relating to national security and replaced the .

Affected Public: Business or other for-profit organizations; state or local government.

Respondent's Obligation: Voluntary.

OMB Desk Officer: Nicholas A. Fraser, (202) 395–5887.

Copies of the above information collection proposal can be obtained by calling or writing Diana Hynek, Departmental Paperwork Clearance Officer, (202) 482–0266, Department of Commerce, Room 6616, 14th and Constitution Avenue, NW., Washington, DC 20230 (or via the Internet at *dHynek@doc.gov*).

Written comments and recommendations for the proposed information collection should be sent within 30 days of publication of this notice to Nicholas Fraser, OMB Desk Officer, Fax number (202) 395–5167 or *Nicholas_A._Fraser@omb.eop.gov.*

Dated: October 14, 2010.

Gwellnar Banks,

Management Analyst, Office of the Chief Information Officer.

[FR Doc. 2010–26248 Filed 10–18–10; 8:45 am]

BILLING CODE 3510–60–P

DEPARTMENT OF COMMERCE

Submission for OMB Review; Comment Request

The Department of Commerce will submit to the Office of Management and Budget (OMB) for clearance the following proposal for collection of information under the provisions of the Paperwork Reduction Act (44 U.S.C. Chapter 35).

Agency: National Oceanic and Atmospheric Administration (NOAA).

Title: Applications and Reporting Requirements for the Incidental Take of Marine Mammals by Specified Activities (other than Commercial Fishing Operations) under the Marine Mammal Protection Act.

OMB Control Number: 0648–0151.

Form Number(s): NA.

Type of Request: Regular submission (extension of a currently approved information collection).

Number of Respondents: 71.

Average Hours per Response: Incidental harassment authorization (IHA) application, 399 hours; IHA interim draft report, 310 hours; IHA draft annual report, 422 hours; IHA final annual report, 163 hours; Letter of Authorization (LOA) initial application (preparation for regulations), 1,100 hours; LOA annual application, 70 hours; LOA draft annual report, 220 hours; LOA final annual report, 65 hours; LOA draft comprehensive report, 625 hours; LOA final comprehensive report, 300 hours.

Burden Hours: 26,410.

Needs and Uses: The Marine Mammal Protection Act of 1972 (MMPA; 16 U.S.C. 1361 *et seq.*) prohibits the "take" of marine mammals unless otherwise authorized or exempted by law. Among the provisions that allow for lawful take of marine mammals, sections 101(a)(5)(A) and (D) of the MMPA direct the Secretary of Commerce to allow, upon request, the incidental, but not intentional, taking of small numbers of marine mammals by United States (U.S.) citizens who engage in a specified activity (other than commercial fishing), within a specified geographical region, if certain findings are made and either regulations are issued or, if the taking is limited to harassment, a notice of a proposed authorization is provided to the public for review.

Authorization for incidental takings shall be granted: (1) If the Secretary, acting by delegation through the National Marine Fisheries Service (NMFS), finds that the taking will have a negligible impact on the species or stock(s) and will not have an unmitigable adverse impact on the availability of the species or stock(s) for subsistence uses (where relevant), and (2) if the permissible methods of taking and requirements pertaining to the mitigation, monitoring and reporting of such takings are set forth.

Issuance of an incidental take authorization (ITA) under section 101(a)(5)(A) or (D) of the MMPA requires three sets of information collection: (1) A complete application for an ITA, as set forth in NMFS' implementing regulations at 50 CFR 216.104, which provides the information necessary for NMFS to make the necessary statutory determinations; (2) information relating to required monitoring; and (3) information related to required reporting. These collections of information enable NMFS to: (1) Evaluate the proposed activity's impact on marine mammals; (2) arrive at the appropriate determinations required by the MMPA and other applicable laws prior to issuing the authorization; and (3) monitor impacts of activities for which take authorizations have been issued to determine if predictions regarding impacts on marine mammals were valid.

Affected Public: Business or other for-profit organizations.

Frequency: Annually and on occasion.

Respondent's Obligation: Mandatory.

OMB Desk Officer: *OIRA_Submission@omb.eop.gov.*

Copies of the above information collection proposal can be obtained by calling or writing Diana Hynek, Departmental Paperwork Clearance Officer, (202) 482–0266, Department of Commerce, Room 6616, 14th and Constitution Avenue, NW., Washington, DC 20230 (or via the Internet at *dHynek@doc.gov*).

Written comments and recommendations for the proposed

information collection should be sent within 30 days of publication of this notice to *OIRA_Submission@omb.eop.gov.*

Dated: October 14, 2010.

Gwellnar Banks,

Management Analyst, Office of the Chief Information Officer.

[FR Doc. 2010–26252 Filed 10–18–10; 8:45 am]

BILLING CODE 3510–22–P

DEPARTMENT OF COMMERCE

Submission for OMB Review; Comment Request

The Department of Commerce will submit to the Office of Management and Budget (OMB) for clearance the following proposal for collection of information under the provisions of the Paperwork Reduction Act (44 U.S.C. Chapter 35).

Agency: National Oceanic and Atmospheric Administration (NOAA).

Title: Highly Migratory Species Dealer Reporting Family of Forms.

OMB Control Number: 0648–0040.

Form Number(s): 88–14.

Type of Request: Regular submission (renewal of an existing information collection).

Number of Respondents: 1,832.

Average Hours per Response: Catch documents, export/re-export certificates and statistical documents, 5 minutes; validation of these documents, 15 minutes; nongovernmental validation authorization, 2 hours; Atlantic bluefin tuna daily landing report and tag, 3 minutes; biweekly landing reports, 15 minutes; biweekly negative landing reports, 15 minutes.

Burden Hours: 6,735.

Needs and Uses: Under the provisions of the Magnuson-Stevens Fishery Conservation and Management Act (16 U.S.C. 1801 *et seq.*), the National Marine Fisheries Service (NMFS) is responsible for management of the Nation's marine fisheries. NMFS must also carry out, as necessary and appropriate, obligations the United States undertakes internationally regarding tuna management through the Atlantic Tunas Convention Act (16 U.S.C. 971 *et seq.*). NMFS must collect domestic landings data for Atlantic highly migratory species via dealer reports in order to provide information vital for fishery management. In addition, the United States must monitor the import, export, and re-export of bluefin tuna, frozen bigeye tuna, and swordfish in order to comply with international obligations established through membership in the International Commission for the Conservation of Atlantic Tunas (ICCAT). ICCAT has implemented a trade monitoring program for bluefin tuna, frozen bigeye tuna, and swordfish to discourage illegal, unregulated, and unreported fishing activities as well as to further understand catches of and international trade in these species. Similar objectives are the basis for the Southern bluefin tuna trade monitoring program established by the Commission for the Conservation of Southern Bluefin Tuna (CCSBT). Although the United States is not a member of the CCSBT, effective management of the Southern bluefin tuna resource is in the best interest of affected parties in the United States. Thus, the United States has implemented the CCSBT trade monitoring program, along with the analogous ICCAT programs.

This collection serves as a family of forms for Atlantic highly migratory species dealer reporting requirements, including the purchase of highly migratory species from fishermen, and the import, export, and/or re-export of highly migratory species.

Affected Public: Business or other for-profit organizations.

Frequency: Daily, biweekly and on occasion.

Respondent's Obligation: Mandatory.

OMB Desk Officer: *OIRA_Submission@omb.eop.gov.*

Copies of the above information collection proposal can be obtained by calling or writing Diana Hynek, Departmental Paperwork Clearance Officer, (202) 482–0266, Department of Commerce, Room 6616, 14th and Constitution Avenue, NW., Washington, DC 20230 (or via the Internet at *dHynek@doc.gov*).

Written comments and recommendations for the proposed information collection should be sent within 30 days of publication of this notice to *OIRA_Submission@omb.eop.gov.*

Dated: October 14, 2010.

Gwellnar Banks,

Management Analyst, Office of the Chief Information Officer.

[FR Doc. 2010–26277 Filed 10–18–10; 8:45 am]

BILLING CODE 3510–22–P

DEPARTMENT OF COMMERCE

International Trade Administration

[A–351–828]

Certain Hot-Rolled Flat-Rolled Carbon-Quality Steel Products From Brazil: Correction to Notice of Antidumping Duty Order

AGENCY: Import Administration, International Trade Administration, Department of Commerce.

DATES: *Effective Date:* October 19, 2010.

FOR FURTHER INFORMATION CONTACT: David Cordell or Ericka Ukrow, AD/CVD Operations, Office 7, Import Administration, International Trade Administration, U.S. Department of Commerce, 14th Street and Constitution Avenue, NW., Washington, DC 20230; *telephone:* (202) 482–0408 or (202) 482–0405, respectively.

Correction

On March 12, 2002, the Department published a notice of antidumping duty order for certain hot-rolled flat-rolled carbon-quality steel products from Brazil. *See Antidumping Duty Order: Certain Hot-Rolled Flat-Rolled Carbon-Quality Steel Products From Brazil,* 67 FR 11093 (March 12, 2002) ("*Order*"). The *Order* states incorrectly that "certain hot-rolled steel coil which meets the following chemical, physical and mechanical specifications is outside and/or specifically excluded from the scope of the order."

Hot-rolled steel coil which meets the following chemical, physical and mechanical specifications:

C	Mn	P	S	Si	Cr	Cu	Ni
0.10–0.14%	0.90% Max.	0.025% Max.	0.005% Max.	0.30–0.50%	0.30–0.50%	0.20–0.40%	0.20% Max.

Width = 44.80 inches maximum; Thickness = 0.063–0.198 inches; Yield Strength = 50,000 ksi minimum; Tensile Strength = 70,000–88,000 psi.

Hot-rolled steel coil which meets the following chemical, physical and mechanical specifications:

C	Mn	P	S	Si	Cr	Cu	Ni	Mo
0.10–0.16%	0.70—0.90%	0.025% Max.	0.006% Max.	0.30–0.50%	0.30–0.50%	0.25% Max.	0.20% Max.	0.21% Max.

Width = 44.80 inches maximum; Thickness = 0.350 inches maximum; Yield Strength = 80,000 ksi minimum; Tensile Strength = 105,000 psi Aim.

C	Mn	P	S	Si	Cr	Cu	Ni	Nb	Ca	Al
0.15% Max.	1.40% Max.	0.025% Max.	0.010% Max.	0.50% Max.	1.00% Max.	0.50% Max.	0.20% Max.	0.005% Min.	Treated	0.01—0.70% Max.

Width = 39.37 inches; Thickness = 0.181 inches maximum; Yield Strength = 70,000 psi minimum for thicknesses; 0.148 inches and 65,000 psi minimum for thicknesses > 0.148 inches; Tensile Strength = 80,000 psi minimum. *See Order* at 11093, 11094.

In addition, the terminology in the "scope of the order" section incorrectly uses the word "agreement" seven times instead of referring to the "order" itself. The first four instances incorrectly uses the phrase "scope of this agreement." The final three incorrectly state (1) "subject to this agreement" (2) "covered by this agreement" and (3) "under this agreement."

The *Order* is hereby corrected to read that certain hot-rolled steel coil which meets the following chemical, physical and mechanical specifications is excluded from the scope of the order.[1]

Hot-rolled steel coil which meets the following chemical, physical and mechanical specifications:

C	Mn	P	S	Si	Cr	Cu	Ni
0.10–0.14%	0.90% Max.	0.025% Max.	0.005% Max.	0.30–0.50%	0.50–0.70%	0.20–0.40%	0.20% Max.

Width = 44.80 inches maximum; Thickness = 0.063–0.198 inches; Yield Strength = 50,000 ksi minimum; Tensile Strength = 70,000–88,000 psi.

Hot-rolled steel coil which meets the following chemical, physical and mechanical specifications:

C	Mn	P	S	Si	Cr	Cu	Ni	Mo
0.10–0.16%	0.70—0.90%	0.025% Max.	0.006% Max.	0.30–0.50%	0.50–0.70%	0.25% Max.	0.20% Max.	0.21% Max.

Width = 44.80 inches maximum; Thickness = 0.350 inches maximum; Yield Strength = 80,000 ksi minimum; Tensile Strength = 105,000 psi Aim.

Hot-rolled steel coil which meets the following chemical, physical and mechanical specifications:

C	Mn	P	S	Si	Cr	Cu	Ni	Nb	Ca	Al
0.15% Max.	1.40% Max.	0.025% Max.	0.010% Max.	0.50% Max.	1.00% Max.	0.50% Max.	0.20% Max.	0.005% Min.	Treated	0.01–0.07% Max.

Width = 39.37 inches; Thickness = 0.181 inches maximum; Yield Strength = 70,000 psi minimum for thicknesses; 0.148 inches and 65,000 psi minimum for thicknesses > 0.148 inches; Tensile Strength = 80,000 psi minimum. *See Order* at 11093, 11094.

The *Order* is hereby corrected to refer to itself as an "order" in all cases where "agreement" was used in the "scope of the order" section of the *Order.*

This notice is published in accordance with section 777(i) of the Tariff Act of 1930, as amended.

Dated: October 12, 2010

Ronald K. Lorentzen,

Deputy Assistant Secretary for Import Administration.

[FR Doc. 2010–26268 Filed 10–18–10; 8:45 am]

BILLING CODE 3510–DS–P

DEPARTMENT OF COMMERCE

National Oceanic and Atmospheric Administration

RIN 0648–XZ51

Marine Mammals; File No. 15543

AGENCY: National Marine Fisheries Service (NMFS), National Oceanic and Atmospheric Administration (NOAA), Commerce.

ACTION: Notice; receipt of application.

SUMMARY: Notice is hereby given that Randall S. Wells, PhD (Principal Investigator), Sarasota Dolphin Research Program, c/o Mote Marine Laboratory, 1600 Ken Thompson Parkway, Sarasota, FL 34236, has applied in due form for a permit to conduct research on bottlenose dolphins (*Tursiops truncatus*).

DATES: Written, telefaxed, or e-mail comments must be received on or before November 18, 2010.

ADDRESSES: The application and related documents are available for review by selecting "Records Open for Public Comment" from the *Features* box on the Applications and Permits for Protected Species (APPS) home page, *https://apps.nmfs.noaa.gov,* and then selecting File No. 15543 from the list of available applications.

These documents are also available upon written request or by appointment in the following office(s):

Permits, Conservation and Education Division, Office of Protected Resources, NMFS, 1315 East-West Highway, Room

[1] *See* also the *Antidumping Duty Order; Certain Hot-Rolled Flat-Rolled Carbon-Quality Steel Products From Japan,* 64 FR 34778 (June 29, 1999).

13705, Silver Spring, MD 20910; phone (301) 713–2289; fax (301) 713–0376; and

Southeast Region, NMFS, 263 13th Avenue South, Saint Petersburg, Florida 33701; phone (727) 824–5312; fax (727) 824–5309.

Written comments on this application should be submitted to the Chief, Permits, Conservation and Education Division, at the address listed above. Comments may also be submitted by facsimile to (301) 713–0376, or by e-mail to *NMFS.Pr1Comments@noaa.gov.* Please include the File No. in the subject line of the e-mail comment.

Those individuals requesting a public hearing should submit a written request to the Chief, Permits, Conservation and Education Division at the address listed above. The request should set forth the specific reasons why a hearing on this application would be appropriate.

FOR FURTHER INFORMATION CONTACT: Laura Morse or Carrie Hubard, (301) 713–2289.

SUPPLEMENTARY INFORMATION: The subject permit is requested under the authority of the Marine Mammal Protection Act of 1972, as amended (MMPA; 16 U.S.C. 1361 *et seq.*), and the regulations governing the taking and importing of marine mammals (50 CFR part 216).

The applicant requests a five-year permit to take bottlenose dolphins for scientific research. Annually, up to 15,000 individuals would be approached for photo-identification and behavioral studies and 100 dolphins would be remotely biopsy sampled. Fifty dolphins a year would be captured, examined, sampled, tagged, marked, and released for health assessment studies. Research would occur in the shallow coastal waters of west Florida out to 50 nm offshore, with a focus along the central west coast, from Clearwater southward to Fort Myers, including Sarasota Bay, Tampa Bay, Lemon Bay, Gasparilla Sound, Charlotte Harbor, and Pine Island Sound. Females with calves less than one year old would not be captured. The research would provide crucial background information on individual identification, sex, age, reproductive status, and genetic relationships to support long-term observational studies of population structure, population dynamics, life history, social structure, genetic structure including paternity patterns, and human interactions. The sampling and tagging would support studies of contaminant loads and associated medical effects, immune system function, effects of harmful algae, nutritional status, feeding behavior, ranging patterns, studies of whistle development and function, measures of hearing ability, and behavior associated with sound production. Research would also include assessments of oil spill impacts at individual and population levels.

In compliance with the National Environmental Policy Act of 1969 (42 U.S.C. 4321 *et seq.*), an initial determination has been made that the activity proposed is categorically excluded from the requirement to prepare an environmental assessment or environmental impact statement.

Concurrent with the publication of this notice in the **Federal Register**, NMFS is forwarding copies of the application to the Marine Mammal Commission and its Committee of Scientific Advisors.

Dated: October 13, 2010.

P. Michael Payne,

Chief, Permits, Conservation and Education Division, Office of Protected Resources, National Marine Fisheries Service.

[FR Doc. 2010–26288 Filed 10–18–10; 8:45 am]

BILLING CODE 3510–22–P

DEPARTMENT OF COMMERCE

Foreign-Trade Zones Board

[Order No. 1711]

Approval for Manufacturing Authority Foreign-Trade Zone 196 ATC Logistics & Electronics (Cell Phone Kitting) Fort Worth, TX

Pursuant to its authority under the Foreign-Trade Zones Act of June 18, 1934, as amended (19 U.S.C. 81a–81u), the Foreign-Trade Zones Board (the Board) adopts the following Order:

Whereas, ATC Logistics & Electronics (ATCLE), an operator of Foreign-Trade Zone 196, has requested manufacturing authority within FTZ 196 in Fort Worth, Texas, (FTZ Docket 19–2010, filed 3/30/2010);

Whereas, notice inviting public comment has been given in the **Federal Register** (75 FR 17691, 4/7/2010) and the application has been processed pursuant to the FTZ Act and the Board's regulations; and,

Whereas, the Board adopts the findings and recommendations of the examiner's report, and finds that the requirements of the FTZ Act and Board's regulations are satisfied, and that the proposal is in the public interest;

Now, therefore, the Board hereby orders:

The application for manufacturing authority under zone procedures within FTZ 196 on behalf of ATC Logistics & Electronics, as described in the application and **Federal Register** notice, is approved, subject to the FTZ Act and the Board's regulations, including Section 400.28.

Signed at Washington, DC, October 7, 2010.

Ronald K. Lorentzen,

Deputy Assistant Secretary for Import Administration, Alternate Chairman, Foreign-Trade Zones Board.

[FR Doc. 2010–26276 Filed 10–18–10; 8:45 am]

BILLING CODE P

DEPARTMENT OF COMMERCE

Foreign-Trade Zones Board

[Order No. 1713]

Approval for Processing Authority Foreign-Trade Zones 73 and 74; The Belt's Corporation (Kitting of Liquor Gift Sets), Elkridge and Baltimore, MD

Pursuant to its authority under the Foreign-Trade Zones Act of June 18, 1934, as amended (19 U.S.C. 81a–81u), the Foreign-Trade Zones Board (the Board) adopts the following Order:

Whereas, The Belt's Corporation, an operator of Foreign-Trade Zones 73 and 74, has requested processing authority at sites within FTZs 73 and 74 in Elkridge and Baltimore, Maryland (FTZ Docket 16–2010, filed 3/5/2010);

Whereas, notice inviting public comment has been given in the **Federal Register** (75 FR 12732, 3–17–2010) and the application has been processed pursuant to the FTZ Act and the Board's regulations; and,

Whereas, the Board adopts the findings and recommendations of the examiner's report, and finds that the requirements of the FTZ Act and Board's regulations are satisfied, and that the proposal is in the public interest;

Now, Therefore, the Board hereby orders:

The application for processing authority under zone procedures within FTZs 73 and 74 on behalf of The Belt's Corporation, as described in the application and **Federal Register** notice, is approved, subject to the FTZ Act and the Board's regulations, including Section 400.28.

Signed at Washington, DC, October 7, 2010.

Ronald K. Lorentzen,

Deputy Assistant Secretary for Import Administration Alternate Chairman, Foreign-Trade Zones Board.

ATTEST:

Andrew McGilvray,

Executive Secretary.

[FR Doc. 2010–26273 Filed 10–18–10; 8:45 am]

BILLING CODE 3510–DS–P

DEPARTMENT OF COMMERCE

National Oceanic and Atmospheric Administration

RIN 0648–XZ76

Endangered and Threatened Wildlife and Plants; Proposed Listing Determinations for Three Distinct Population Segments of Atlantic Sturgeon in the Northeast Region

AGENCY: National Marine Fisheries Service (NMFS), National Oceanic and Atmospheric Administration (NOAA), Commerce.

ACTION: Notice of four public hearings.

SUMMARY: In November 2010, we (NMFS) will hold a total of four public hearings—one in each of the following locations: Portland, ME; Stony Brook, NY; Wilmington, DE; and Newport News, VA. These hearings are to receive comments and answer questions on the proposal to list the Gulf of Maine (GOM) Atlantic sturgeon distinct population segment (DPS) as threatened and the New York Bight (NYB) and Chesapeake Bay (CB) DPSs as endangered under the Endangered Species Act (ESA) of 1973, as amended.

DATES: The hearings will be held on November 3, 2010, from 7 to 9 p.m. in Portland, ME; on November 4, 2010, from 7 to 9 p.m. in Newport News, VA; on November 8, 2010, from 7 to 9 p.m. in Stony Brook, NY; and on November 9, 2010, from 7 to 9 p.m. in Wilmington, DE. Informational sessions will be held prior to each hearing from 6:30 to 7 p.m.

ADDRESSES: The November 3, 2010, hearing will be held at the Eastland Park Hotel, 157 High Street, Portland, ME; the November 4, 2010, hearing will be held at the Point Plaza Suites at City Center, 950 J. Clyde Morris Boulevard, Newport News, VA; the November 8, 2010, hearing will be held at Stony Brook University, School of Marine and Atmospheric Sciences, 100 Nicholls Road, Stony Brook, NY; and the November 9, 2010, hearing will be held at the Doubletree Hotel Wilmington Downtown, 700 N. King Street, Wilmington, DE.

FOR FURTHER INFORMATION CONTACT: Lynn Lankshear, NMFS, Northeast Region (978) 282–8473; Kimberly Damon-Randall, NMFS, Northeast Region (978) 282–8485; or Marta Nammack, NMFS, Office of Protected Resources (301) 713–1401.

SUPPLEMENTARY INFORMATION:

Background

On October 6, 2010, we published a proposed rule (75 FR 61872) to list the GOM DPS of Atlantic sturgeon as threatened and the NYB and CB DPSs as endangered under the ESA. We will accept oral comment regarding the proposed listing decision for the three Northeast Region DPSs of Atlantic sturgeon at four public hearings.

Special Accommodations

These hearings are physically accessible to people with disabilities. Requests for sign language interpretation or other auxiliary aids should be directed to Lynn Lankshear at (978) 282–8473 at least 7 working days prior to the hearing date.

Authority: 16 U.S.C. 1531 *et seq.*

Dated: October 13, 2010.

James H. Lecky,

Director, Office of Protected Resources, National Marine Fisheries Service.

[FR Doc. 2010–26272 Filed 10–14–10; 4:15 pm]

BILLING CODE 3510–22–P

DEPARTMENT OF COMMERCE

International Trade Administration

[A–570–848]

Freshwater Crawfish Tail Meat From the People's Republic of China: Extension of the Final Results of Antidumping Duty Administrative and New-Shipper Reviews

AGENCY: Import Administration, International Trade Administration, Department of Commerce.

DATES: *Effective Date:* October 19, 2010.

FOR FURTHER INFORMATION CONTACT: Dmitry Vladimirov, AD/CVD Operations, Office 5, Import Administration, International Trade Administration, U.S. Department of Commerce, 14th Street and Constitution Avenue, NW., Washington, DC 20230; telephone: (202) 482–0665.

SUPPLEMENTARY INFORMATION:

Background

On June 16, 2010, the Department of Commerce (the Department) published in the **Federal Register** the preliminary results of the administrative and new-shipper reviews of the antidumping duty order on freshwater crawfish tail meat from the People's Republic of China. *See Freshwater Crawfish Tail Meat From the People's Republic of China: Preliminary Results of Antidumping Duty Administrative and New-Shipper Reviews,* 75 FR 34100 (June 16, 2010) (*Preliminary Results*). The reviews cover the period September 1, 2008, through August 31, 2009. The final results of the administrative and new-shipper reviews were originally due no later than October 14, 2010.

Extension of Time Limit for Final Results

Section 751(a)(3)(A) of the Tariff Act of 1930, as amended (the Act), requires the Department to issue the final results of an administrative review within 120 days after the date on which the preliminary results are published. If it is not practicable to complete the review within this time period, section 751(a)(3)(A) of the Act allows the Department to extend the time limit for the final results up to 180 days after the date on which the preliminary results are published.

Section 751(a)(2)(B)(iv) of the Act and 19 CFR 351.214(i)(1) require the Department to issue the final results of a new-shipper review within 90 days after the date on which the preliminary results are issued. The Department may extend the deadline for completion of the final results of a new-shipper review to 150 days after the date on which the preliminary results are issued if it determines that the case is extraordinarily complicated. See 19 CFR 351.214(i)(2).

On March 29, 2010, in accordance with 19 CFR 351.214(j)(3), a new shipper, Nanjing Gemsen International Co., Ltd., agreed to waive the applicable time limits for conducting the new-shipper review and consented to the alignment of the new-shipper review with the concurrent administrative review. *See Preliminary Results,* 75 FR at 34101. Accordingly, we may extend the deadline of October 14, 2010, for completion of the final results of the new-shipper review to coincide with completion of the final results of the administrative review.

We find that it is not practicable to complete these reviews by October 14, 2010, because we require additional time to analyze and address a complicated surrogate-value issue involving the most appropriate methodology for valuing labor for the final results of these reviews. Consequently, in accordance with

sections 751(a)(3)(A) and 751(a)(2)(B)(iv) of the Act, the Department is extending the time limit for completion of the final results of the administrative and new-shipper reviews by 60 days to December 13, 2010.

We are issuing and publishing this notice in accordance with sections 751(a)(1), 751(a)(2)(B), and 777(i)(1) of the Act.

Dated: October 13, 2010.

Susan H. Kuhbach,

Acting Deputy Assistant Secretary for Antidumping and Countervailing Duty Operations.

[FR Doc. 2010–26269 Filed 10–18–10; 8:45 am]

BILLING CODE 3510–DS–P

DEPARTMENT OF COMMERCE

International Trade Administration

[A–570–929]

Small Diameter Graphite Electrodes From the People's Republic of China: Extension of Time Limit for the Preliminary Results of the First Administrative Review of the Antidumping Duty Order

AGENCY: Import Administration, International Trade Administration, Department of Commerce.

DATES: *Effective Date:* October 19, 2010.

FOR FURTHER INFORMATION CONTACT: Frances Veith or Lindsey Novom, AD/CVD Operations, Import Administration, International Trade Administration, U.S. Department of Commerce, 14th Street and Constitution Avenue, NW., Washington, DC 20230, *telephone:* (202) 482–4295 or (202) 482–5256, respectively.

SUPPLEMENTARY INFORMATION:

Background

On March 30, 2010, the Department of Commerce ("the Department") initiated the administrative review of the antidumping duty order on small diameter graphite electrodes from the People's Republic of China ("PRC") for the period August 21, 2008, through January 31, 2010. *See Initiation of Antidumping and Countervailing Duty Administrative Reviews and Requests for Revocation in Part,* 75 FR 15679 (March 30, 2010). The preliminary results of this review are currently due no later than October 31, 2010.

Statutory Time Limits

Section 751(a)(3)(A) of the Tariff Act of 1930, as amended ("the Act"), requires the Department to make a preliminary determination in an administrative review within 245 days after the last day of the anniversary month of an order for which a review is requested and a final determination within 120 days after the date on which the preliminary results are published. However, if it is not practicable to complete the review within these time periods, section 751(a)(3)(A) of the Act allows the Department to extend the time limit for the preliminary determination to a maximum of 365 days after the last day of the anniversary month.

Extension of Time Limit of Preliminary Results

We determine that it is not practicable to complete the preliminary results of this review within the original time limit because the Department requires additional time to analyze the supplemental questionnaire responses, issue additional supplemental questionnaires if necessary, and evaluate the most appropriate surrogate values on the administrative record to use in this segment of the proceeding. Therefore, the Department is extending the time limit for completion of the preliminary results by 120 days. An extension of 120 days from the current deadline of October 31, 2010, would result in a new deadline of February 28, 2011. The final results continue to be due 120 days after the publication of the preliminary results.

We are issuing and publishing this notice in accordance with sections 751(a)(3)(A) and 777(i)(1) of the Act.

Dated: October 13, 2010.

Susan H. Kuhbach,

Acting Deputy Assistant Secretary for Antidumping and Countervailing Duty Operations.

[FR Doc. 2010–26266 Filed 10–18–10; 8:45 am]

BILLING CODE 3510–DS–P

DEPARTMENT OF COMMERCE

International Trade Administration

[A–489–501]

Certain Welded Carbon Steel Pipe and Tube From Turkey: Notice of Final Antidumping Duty Administrative Review

AGENCY: Import Administration, International Trade Administration, U.S. Department of Commerce.

SUMMARY: On June 11, 2010, the Department of Commerce ("the Department") published the preliminary results of the antidumping duty administrative review of certain welded carbon steel pipe and tube from Turkey. This review covers four producers/exporters. The period of review ("POR") is May 1, 2008, through April 30, 2009.

Based on our analysis of the comments received, we have made certain changes in the margin calculations. The final results, consequently, differ from the preliminary results. The final weighted-average dumping margins for the reviewed firms are listed below in the section entitled "Final Results of Review."

DATES: *Effective Date:* October 19, 2010.

FOR FURTHER INFORMATION CONTACT: Joy Zhang or Christopher Hargett, at (202) 482–1168 or (202) 482–4161, respectively; AD/CVD Operations, Office 3, Import Administration, International Trade Administration, U.S. Department of Commerce, 14th Street and Constitution Avenue, NW., Washington, DC 20230.

SUPPLEMENTARY INFORMATION:

Background

The administrative review covers the following four producers/exporters: The Borusan Group,[1] Toscelik,[2] Erbosan Erciyas Boru Sanayi ve Ticaret A.S. ("Erbosan"), and the Yucel Group companies.[3] On July 28, 2009, due to the significant number of requests received and the Department's resource constraints at the time of initiation of the instant review, the Department informed known interested parties of its intent to limit the number of companies examined in the current review. *See* Memo to Melissa Skinner, through James Terpstra, from Dennis McClure, "Antidumping Duty Administrative Review of Certain Welded Carbon Steel Pipe and Tube from Turkey: Selection of Respondents for Individual Review," dated July 28, 2009. In accordance with section 777A(c)(2)(B) of the Tariff Act of 1930, as amended ("the Act"), we selected Borusan and Toscelik as mandatory respondents. On June 11, 2010, the Department published in the **Federal Register** the preliminary results of the antidumping duty administrative view of certain welded carbon steel pipe and tube from Turkey. *See Certain Welded Carbon Steel Pipe and Tube*

---

[1] The Borusan Group includes Borusan Mannesmann Boru Sanayi ve Ticaret A.S., Borusan Birlesik Boru Fabrikalari San ve Tic., Borusan Istikbal Ticaret T.A.S., Boruson Holding A.S., Boruson Gemlik Boru Tesisleri A.S., Borusan Ihracat Ithalat ve Dagitim A.S., and Borusan Ithicat ve Dagitim A.S. (collectively "Borusan")

[2] Toscelik Profil ve Sac Endustrisi A.S., Toscelik Metal Ticaret A.S., Tosyali Dis Ticaret A.S. (collectively "Toscelik").

[3] Cayirova Boru Sanayi ve Ticaret A.S., Yucel Boru ve Profil Endustrisi A.S., and Yucelboru Ihracat Ithalat ve Pazarlama A.S. (collectively "Yucel Group Companies)".

from Turkey: Notice of Preliminary Results of Antidumping Duty Administrative Review, 75 FR 33262, (June 11, 2010) ("*Preliminary Results*").

We invited parties to comment on our preliminary results. On July 30, 2010, we received case briefs from Borusan and United States Steel Corporation ("U.S. Steel"). On August 5, 2010, and August 6, 2010, we received rebuttal briefs from the same parties, respectively. The Department has conducted this administrative review in accordance with section 751 of the Act.

Period of Review

The POR covered by this review is May 1, 2008, through April 30, 2009.

Scope of the Order

The products covered by this order include circular welded non-alloy steel pipes and tubes, of circular cross-section, not more than 406.4 millimeters (16 inches) in outside diameter, regardless of wall thickness, surface finish (black, galvanized, or painted), or end finish (plain end, beveled end, threaded and coupled). Those pipes and tubes are generally known as standard pipe, though they may also be called structural or mechanical tubing in certain applications. Standard pipes and tubes are intended for the low pressure conveyance of water, steam, natural gas, air, and other liquids and gases in plumbing and heating systems, air conditioner units, automatic sprinkler systems, and other related uses. Standard pipe may also be used for light load-bearing and mechanical applications, such as for fence tubing, and for protection of electrical wiring, such as conduit shells.

The scope is not limited to standard pipe and fence tubing, or those types of mechanical and structural pipe that are used in standard pipe applications. All carbon steel pipes and tubes within the physical description outlined above are included in the scope of this order, except for line pipe, oil country tubular goods, boiler tubing, cold-drawn or cold-rolled mechanical tubing, pipe and tube hollows for redraws, finished scaffolding, and finished rigid conduit.

Imports of these products are currently classifiable under the following Harmonized Tariff Schedule of the United States ("HTSUS") subheadings: 7306.30.10.00, 7306.30.50.25, 7306.30.50.32, 7306.30.50.40, 7306.30.50.55, 7306.30.50.85, and 7306.30.50.90. Although the HTSUS subheadings are provided for convenience and customs purposes, our written description of the scope of this proceeding is dispositive.

Analysis of Comments Received

Issues raised in the case and rebuttal briefs by parties to this proceeding and to which we have responded are listed in Appendix 1 to this notice and addressed in the Memorandum To: Ronald K. Lorentzen, Deputy Assistant Secretary for Import Administration, From: Susan H. Kuhbach, Acting Deputy Assistant Secretary for Antidumping and Countervailing Duty Operations, Subject: Issues and Decision Memorandum for the Final Results of the Antidumping Duty Administrative Review: Certain Welded Carbon Steel Pipe and Tube from Turkey, dated October 5, 2010 ("Issues and Decision Memorandum"), which is hereby adopted by this notice. Parties can find a complete discussion of the issues raised in this administrative review and the corresponding recommendations in this public memorandum, which is on file in the Central Records Unit ("CRU"), Room 7046 of the main Department building. In addition, a copy of the Issues and Decision Memorandum can be accessed directly on our Web site at *http://ia.ita.doc.gov/frn.* The paper copy and electronic version of the Issues and Decision Memorandum are identical in content.

Yucel Group Companies

In the *Preliminary Results,* the Department found that the Yucel Group companies had no shipments of subject merchandise and announced its intent to liquidate any entries of merchandise produced by the Yucel Group companies and exported by other parties at the all-others rate.[4] We did not receive any comments on our preliminary results with respect to the Yucel Group companies. Thus, there is no information or argument on the record of the current review that warrants reconsidering our preliminary decision to liquidate any existing entries of merchandise produced by the Yucel Group companies and exported by other parties at the all-others rate. Therefore, we will instruct CBP to liquidate any existing entries of merchandise produced by the Yucel Group companies and exported by other parties at the all-others rate.

Final Results of Review

As a result of this review, we determine that the following margins exist for the period May 1, 2008, through April 30, 2009:

Manufacturer/exporter	Weighted-Average margin (percent)
Borusan	5.57
Toscelik	0.00
Erbosan	5.57
All Others	14.74

Disclosure

We will disclose any memorandums used in our analysis to parties to these proceedings within five days of the date of publication of this notice.[5]

Assessment

The Department shall determine, and CBP shall assess, antidumping duties on all appropriate entries.

Pursuant to 19 CFR 351.212(b)(1), because Borusan reported the entered value for all of its U.S. sales, we have calculated importer-specific *ad valorem* duty assessment rates based on the ratio of the total amount of antidumping duties calculated for the examined sales to the total entered value of the sales which entered value was reported. To determine whether the duty assessment rates are *de minimis,* in accordance with the requirement set forth in 19 CFR 351.106(c)(2), we have calculated importer-specific *ad valorem* ratios based on the entered value.

For the remaining company, Erbosan, which was not selected for individual examination, we will instruct CBP to apply the rate listed above to all entries of subject merchandise produced and/or exported by that firm. It is the Department's practice to calculate such a rate as the weighted average of the cash deposit rates calculated for the companies selected for individual examination, excluding any which are *de minimis* or determined entirely on adverse facts available. For this review, it is the rate calculated for Borusan; the only above *de minimis* rate.

Pursuant to 19 CFR 351.106(c)(2), we will instruct CBP to liquidate without regard to antidumping duties any entries for which the assessment rate is *de minimis* (*i.e.,* less than 0.50 percent). The Department intends to issue assessment instructions to CBP 15 days after the date of publication of these final results of review.

The Department clarified its "automatic assessment" regulation on May 6, 2003.[6] This clarification will apply to entries of subject merchandise during the POR produced by companies included in these final results of review for which the reviewed companies did

[4] *See Preliminary Results,* 75 FR 33263.

[5] *See* 19 CFR 351.224(b).

[6] *See* Antidumping and Countervailing Duty Proceedings: Assessment of Antidumping Duties, 68 FR 23954 (May 6, 2003).

not know their merchandise was destined for the United States. In such instances, we will instruct CBP to liquidate unreviewed entries at the country-specific all-others rate established in the less-than-fair-value ("LTFV") investigation if there is no rate for the intermediate company(ies) involved in the transaction.

Cash Deposit Requirements

The following antidumping duty deposit rates will be effective upon publication of this notice of final results of the administrative review for all shipments of welded pipe and tube from Turkey entered, or withdrawn from warehouse, for consumption on or after the date of the publication of these final results, as provided by section 751(a)(1) of the Act: (1) For the companies subject to this review, the cash deposit rate will be the rates listed above; (2) for previously reviewed or investigated companies not listed above, the cash deposit rate will continue to be the company-specific rate published for the most recent final results in which that manufacturer or exporter participated; (3) if the exporter is not a firm covered in this review, a prior review, or the original LTFV investigation, but the manufacturer is, the cash deposit rate will be the rate established for the most recent final results for the manufacturer of the merchandise; and, (4) if neither the exporter nor the manufacturer is a firm covered in this or any previous review conducted by the Department, the cash deposit rate will be 14.74 percent, the all-others rate established in the LTFV investigation.[7] These cash deposit requirements, when imposed, shall remain in effect until further notice.

Notification to Importers

This notice serves as a final reminder to importers of their responsibility, under 19 CFR 351.402(f)(2), to file a certificate regarding the reimbursement of antidumping duties prior to liquidation of the relevant entries during this review period. Failure to comply with this requirement could result in the Secretary's presumption that reimbursement of antidumping duties occurred and the subsequent assessment of double antidumping duties.

Notification to Interested Parties

This notice serves as the only reminder to parties subject to administrative protective orders ("APO") of their responsibility concerning the disposition of proprietary information disclosed under APO in accordance with 19 CFR 351.305(a)(3). Timely written notification of return/destruction of APO materials or conversion to judicial protective order is hereby requested. Failure to comply with the regulations and the terms of an APO is a sanctionable violation.

We are issuing and publishing these results of review in accordance with sections 751(a)(1) and 777(i)(1) of the Act.

Dated: October 12, 2010.

Ronald K. Lorentzen,

Deputy Assistant Secretary for Import Administration.

Appendix—Issues in Decision Memorandum

1. Treatment of "Negative Dumping Margins" (Zeroing)
2. Method of Indexing Quarterly Costs
3. Borusan's Duty Drawback

[FR Doc. 2010–26271 Filed 10–18–10; 8:45 am]

BILLING CODE 3510–DS–P

[7] *See Antidumping Duty Order; Welded Carbon Steel Standard Pipe and Tube Products From Turkey,* 51 FR 17784 (May 15, 1986).

DEPARTMENT OF COMMERCE

International Trade Administration

[A–580–839]

Certain Polyester Staple Fiber From the Republic of Korea: Final Results of the 2008–2009 Antidumping Duty Administrative Review

AGENCY: Import Administration, International Trade Administration, Department of Commerce.

SUMMARY: On June 15, 2010, the Department of Commerce published the preliminary results of the ninth administrative review of the antidumping duty order on certain polyester staple fiber from the Republic of Korea and invited interested parties to comment. The review covers shipments of subject merchandise to the United States by Huvis Corporation. Based on our analysis of the comments received from interested parties, we have made no changes for the final results. The final weighted-average dumping margins are listed below in the "Final Results of the Review" section of this notice.

DATES: *Effective Date:* October 19, 2010.

FOR FURTHER INFORMATION CONTACT: Seth Isenberg or Patricia Tran, Office 1, AD/CVD Operations, Import Administration, International Trade Administration, U.S. Department of Commerce, 14th Street and Constitution Avenue, NW., Washington, DC 20230; *telephone:* (202) 482–0588 and (202) 482–1503, respectively.

SUPPLEMENTARY INFORMATION:

Background

On June 15, 2010, the Department of Commerce ("the Department") published *Certain Polyester Staple Fiber from the Republic of Korea: Preliminary Results of the 2008–2009 Antidumping Duty Administrative Review,* 75 FR 33783 (June 15, 2010) ("*Preliminary Results*") in the **Federal Register**. On July 15, 2010, we received a case brief from Huvis Corporation ("Huvis") concerning the *Preliminary Results.* On July 20, 2010, the Department released a post-preliminary calculation memo with our analysis of cost and price data submitted by Huvis on April 16, 2010, April 27, 2010 and May 28, 2010. *See* 2008–2009 Administrative Review of the Antidumping Duty Order on Certain Polyester Staple Fiber from the Republic of Korea: Post-Preliminary Analysis Calculation Memorandum for Huvis Corporation (dated July 6, 2010) ("Post-Prelim Memo").

Based on that analysis, the Department determined that application of the Department's quarterly costing methodology was not warranted and, as a result, recommended no change to the findings in the *Preliminary Results.* Therefore, we invited interested parties to comment on the *Preliminary Results* and the Post-Prelim Memo.

On July 26, 2010, we received case briefs from DAK Americas, LLC and Invista, S.a.r.L., (collectively, "Petitioners") and Huvis concerning the Post-Prelim Memo. On August 2, 2010, the Department received a rebuttal brief from Huvis. A public hearing was not requested.

Scope of the Order

For the purposes of the order, the product covered is certain polyester staple fiber ("PSF"). PSF is defined as synthetic staple fibers, not carded, combed or otherwise processed for spinning, of polyesters measuring 3.3 decitex (3 denier, inclusive) or more in diameter. This merchandise is cut to lengths varying from one inch (25 mm) to five inches (127 mm). The merchandise subject to the order may be coated, usually with a silicon or other finish, or not coated. PSF is generally used as stuffing in sleeping bags, mattresses, ski jackets, comforters, cushions, pillows, and furniture. Merchandise of less than 3.3 decitex (less than 3 denier) currently classifiable under the Harmonized Tariff Schedule of the United States ("HTSUS") at subheading 5503.20.00.25 is specifically excluded from the order. Also

specifically excluded from the order are polyester staple fibers of 10 to 18 denier that are cut to lengths of 6 to 8 inches (fibers used in the manufacture of carpeting). In addition, low-melt PSF is excluded from the order. Low-melt PSF is defined as a bi-component fiber with an outer sheath that melts at a significantly lower temperature than its inner core.

The merchandise subject to the order is currently classifiable in the HTSUS at subheadings 5503.20.00.45 and 5503.20.00.65. Although the HTSUS subheadings are provided for convenience and customs purposes, the written description of the merchandise under the order is dispositive.

Period of Review

The period of review ("POR") is May 1, 2008, through April 30, 2009.

Analysis of Comments Received

All issues raised in the case and rebuttal briefs by parties to this review are addressed in the Department's October 7, 2010, Issues and Decision Memorandum for the 2008/09 Antidumping Duty Administrative Review of Certain Polyester Staple Fiber from the Republic of Korea ("Decision Memorandum"), which is hereby adopted by this notice. Attached to this notice as an appendix is a list of the issues which parties have raised and to which we have responded in the Decision Memorandum. Parties can find a complete discussion of all issues raised in this review and the corresponding recommendations in this public memorandum. This report is on file in the Department's Central Records Unit in room 7046 of the main Department building. In addition, a complete version of the Decision Memorandum can be accessed directly on the Web at *http://ia.ita doc.gov/frn/index.html.* The paper copy and electronic version of the Decision Memorandum are identical in content.

Fair Value Comparisons

To determine whether sales of PSF from the Republic of Korea to the United States were made at less than normal value ("NV"), we compared export price ("EP") to the NV. We calculated EP, NV, constructed value, and the cost of production, based on the same methodologies used in the *Preliminary Results.*

Final Results of the Review

We find that the following margin percentage exists for the period May 1, 2008, through April 30, 2009:

Manufacturer	Weighted-average margin percentage
Huvis Corporation ...	0.94

Assessment Rates

Huvis submitted evidence demonstrating that it was the importer of record for certain of its POR sales. We examined the customs entry documentation submitted by Huvis and tied it to the U.S. sales listing. Therefore, for purposes of calculating the importer-specific assessment rates, we have treated Huvis as the importer of record for certain POR shipments. Pursuant to 19 CFR 351.212(b)(1), for all sales where Huvis is the importer of record, Huvis submitted the reported entered value of the U.S. sales and we have calculated importer-specific assessment rates based on the ratio of the total amount of antidumping duties calculated for the examined sales to the total entered value of those sales.

Regarding sales where Huvis was not the importer of record, we note that Huvis did not report the entered value for the U.S. sales in question. Accordingly, we have calculated importer-specific per-unit duty assessment rates for the merchandise in question by aggregating the dumping margins calculated for all U.S. sales to each importer and dividing this amount by the total quantity of those sales. To determine whether the duty assessment rates were *de minimis,* we calculated importer-specific *ad valorem* rates based on the estimated entered value.

Pursuant to 19 CFR 351.106(c)(2), we will instruct U.S. Customs and Border Protection ("CBP") to liquidate without regard to antidumping duties any entries for which the assessment rate is *de minimis* (*i.e.,* less than 0.50 percent). The Department intends to issue assessment instructions directly to CBP 15 days after publication of the final results of review.

The Department clarified its "automatic assessment" regulation on May 6, 2003. *See Antidumping and Countervailing Duty Proceedings: Assessment of Antidumping Duties,* 68 FR 23954 (May 6, 2003). This clarification will apply to entries of subject merchandise during the POR produced by Huvis for which Huvis did not know its merchandise was destined for the United States. In such instances, we will instruct CBP to liquidate unreviewed entries at the all-others rate if there is no rate for the intermediate company(ies) involved in the transaction. *Id.*

Cash Deposit Rates

The following antidumping duty deposits will be required on all shipments of certain PSF from the Republic of Korea entered, or withdrawn from warehouse, for consumption, effective on or after the publication date of the final results of this administrative review, as provided by section 751(a)(1) of the Act: (1) The cash deposit rates for the reviewed companies will be the rate listed above (except no cash deposit will be required if a company's weighted-average margin is *de minimis, i.e.,* less than 0.5 percent), (2) for merchandise exported by manufacturers or exporters not covered in this review but covered in the original less-than-fair-value investigation or a previous review, the cash deposit rate will continue to be the most recent rate published in the final determination or final results for which the manufacturer or exporter received an individual rate; (3) if the exporter is not a firm covered in this review, a prior review, or the original investigation, but the manufacturer is, the cash deposit rate will be the rate established for the most recent period for the manufacturer of the merchandise; and (4) if neither the exporter nor the manufacturer is a firm covered in this review, a prior review, or the investigation, the cash deposit rate will be 7.91 percent, the all-others rate established in *Certain Polyester Staple Fiber from the Republic of Korea: Notice of Amended Final Determination and Amended Order Pursuant to Final Court Decision,* 68 FR 74552 (December 24, 2003). These cash deposit requirements, when imposed, shall remain in effect until further notice.

Notification to Importers

This notice serves as a final reminder to importers of their responsibility under 19 CFR 351.402(f)(2) to file a certificate regarding the reimbursement of antidumping duties prior to liquidation of the relevant entries during this review period. Failure to comply with this requirement could result in the Secretary's presumption that reimbursement of antidumping duties occurred and the subsequent assessment of doubled antidumping duties.

Notification Regarding Administrative Protective Orders

This notice also serves as a reminder to parties subject to administrative protective order ("APO") of their responsibility concerning the return or destruction of proprietary information disclosed under APO in accordance

with 19 CFR 351.305(a)(3), which continues to govern business proprietary information in this segment of the proceeding. Timely written notification of the return/destruction of APO materials or conversion to judicial protective order is hereby requested. Failure to comply with the regulations and terms of an APO is a sanctionable violation.

We are issuing and publishing these results and this notice in accordance with sections 751(a)(1) and 777(i)(1) of the Act.

Dated: October 7, 2010.

Ronald K. Lorentzen,

Deputy Assistant Secretary for Import Administration.

APPENDIX I

List of Comments in the Decision Memorandum

Comment 1: Offsetting Negative Margins
Comment 2: Quarterly Cost Methodology

[FR Doc. 2010–26267 Filed 10–18–10; 8:45 am]

BILLING CODE 3510–DS–P

DEPARTMENT OF COMMERCE

International Trade Administration

[A–351–828]

Certain Hot-Rolled Flat-Rolled Carbon Quality Steel Products From Brazil; Final Results of Antidumping Duty Administrative Review

AGENCY: Import Administration, International Trade Administration, Department of Commerce.

SUMMARY: On April 14, 2010, the Department of Commerce (the Department) published the preliminary results of the administrative review of the antidumping duty order on certain hot-rolled, flat-rolled carbon quality steel products (hot-rolled steel) from Brazil. *See Certain Hot-Rolled Flat-Rolled Carbon Quality Steel Products From Brazil: Preliminary Results of Antidumping Duty Administrative Review and Extension of Time Limit for the Final Results,* 75 FR 19369 (April 14, 2010) (*Preliminary Results*). This review covers sales of subject merchandise made by Usinas Siderurgicas de Minas Gerais (USIMINAS) and Companhia Siderurgica Paulista (COSIPA) (collectively, USIMINAS) for the period March 1, 2008, to February 28, 2009. Based on our analysis of the comments received, we have made changes to the margin calculation; therefore, the final results differ from the preliminary results. The final weighted-average dumping margin for the reviewed firms is listed below in the section entitled "Final Results of Review."

DATES: *Effective Date:* October 19, 2010.

FOR FURTHER INFORMATION CONTACT: Patrick Edwards or Dena Crossland, AD/CVD Operations, Office 7, Import Administration, International Trade Administration, U.S. Department of Commerce, 14th Street and Constitution Avenue, NW., Washington, DC 20230; *telephone:* (202) 482–8029 or (202) 482–3362, respectively.

SUPPLEMENTARY INFORMATION:

Background

On April 14, 2010, the Department published in the **Federal Register** the preliminary results of the administrative review of the antidumping duty order on hot-rolled steel from Brazil for the period March 1, 2008, to February 28, 2009. *See Preliminary Results.* As noted in the preliminary results, the Department conducted cost and sales verifications of USIMINAS' questionnaire responses from March 1, 2010, through March 5, 2010, and March 8, 2010, through March 12, 2010, respectively. *See Preliminary Results* at 19372. Due to the necessary rescheduling of the verifications, the Department issued its verification reports subsequent to the *Preliminary Results. See* Memorandum to the File, from Laurens Van Houten, Senior Accountant, titled "Verification of the Cost Response of Usinas Siderurgicas de Minas Gerais ('Usiminas') and Companhia Siderurgica Paulista ('Cosipa') in the Antidumping Review of Hot-Rolled Steel from Brazil," dated April 16, 2010 (USIMINAS Cost Verification Report); *see also,* Memorandum to the File, from Patrick Edwards and Dena Crossland, Analysts, titled "Verification of the Sales Responses of Usinas Siderurgicas de Minas Gerais (USIMINAS) and Companhia Siderurgica Paulista (COSIPA) in the Antidumping Review of Certain Hot-Rolled Flat-Rolled Carbon Quality Steel Products from Brazil," dated June 22, 2010 (USIMINAS Sales Verification Report). Following the release of both verification reports, the Department issued a letter to USIMINAS requesting specific changes to its sales database based upon USIMINAS' disclosure of minor errors at the onset of the sales verification and findings made by the Department during the verification. *See* Letter from Angelica L. Mendoza, Program Manager, to USIMINAS, titled "Requested Changes to Sales Databases Resulting from Sales Verification," dated June 23, 2010. USIMINAS submitted its response and revised databases on July 8, 2010, which served as the start of the period in which parties could submit comments and rebuttal comments on the *Preliminary Results.*

In response to the Department's invitation for comments on the preliminary results of this review, USIMINAS timely submitted its case brief on July 1, 2010. *See* Letter from USIMINAS and COSIPA to the Department of Commerce, titled "Submission of Case Brief: Hot-Rolled Steel from Brazil," dated July 1, 2010 (USIMINAS Case Brief). United States Steel Corporation (U.S. Steel), a petitioning party in this proceeding (petitioner), submitted its case brief on July 21, 2010. *See* Letter from United States Steel Corporation, titled "Case Brief: Certain Hot-Rolled Carbon Steel Flat Products from Brazil," dated July 21, 2010 (U.S. Steel Case Brief). On July 28, 2010, U.S. Steel and Nucor Corporation (Nucor), a domestic interested party in this proceeding, submitted their rebuttal briefs. *See* Letter from United States Steel Corporation, titled "Rebuttal Brief: Certain Hot-Rolled Carbon Steel Flat Products from Brazil," dated July 28, 2010 (U.S. Steel Rebuttal Brief); *see also,* Letter from Nucor Corporation, titled "Certain Hot-Rolled Carbon Steel Flat Products from Brazil: Rebuttal Brief," dated July 28, 2010 (Nucor Rebuttal Brief). No public hearing was requested or held.

Period of Review

The period of review (POR) is March 1, 2008, to February 28, 2009.

Scope of the Order

For purposes of this order, the products covered are certain hot-rolled flat-rolled carbon-quality steel products of a rectangular shape, of a width of 0.5 inch or greater, neither clad, plated, nor coated with metal and whether or not painted, varnished, or coated with plastics or other non-metallic substances, in coils (whether or not in successively superimposed layers) regardless of thickness, and in straight lengths, of a thickness less than 4.75 mm and of a width measuring at least 10 times the thickness. Universal mill plate (*i.e.,* flat-rolled products rolled on four faces or in a closed box pass, of a width exceeding 150 mm, but not exceeding 1250 mm and of a thickness of not less than 4 mm, not in coils and without patterns in relief) of a thickness not less than 4.0 mm is not included within the scope of this order.

Specifically included in this scope are vacuum degassed, fully stabilized (commonly referred to as interstitial-free (IF)) steels, high strength low alloy

(HSLA) steels, and the substrate for motor lamination steels. IF steels are recognized as low carbon steels with micro-alloying levels of elements such as titanium and/or niobium added to stabilize carbon and nitrogen elements. HSLA steels are recognized as steels with micro-alloying levels of elements such as chromium, copper, niobium, titanium, vanadium, and molybdenum. The substrate for motor lamination steels contains micro-alloying levels of elements such as silicon and aluminum.

Steel products to be included in the scope of this order, regardless of Harmonized Tariff Schedule of the United States (HTSUS) definitions, are products in which: (1) Iron predominates, by weight, over each of the other contained elements; (2) the carbon content is 2 percent or less, by weight; and (3) none of the elements listed below exceeds the quantity, by weight, respectively indicated:

1.80 percent of manganese, or
1.50 percent of silicon, or
1.00 percent of copper, or
0.50 percent of aluminum, or
1.25 percent of chromium, or
0.30 percent of cobalt, or
0.40 percent of lead, or
1.25 percent of nickel, or
0.30 percent of tungsten, or
0.012 percent of boron, or
0.10 percent of molybdenum, or
0.10 percent of niobium, or
0.41 percent of titanium, or
0.15 percent of vanadium, or
0.15 percent of zirconium.

All products that meet the physical and chemical description provided above are within the scope of this order unless otherwise excluded. The following products, by way of example, are outside and/or specifically excluded from the scope of this order:

—Alloy hot-rolled steel products in which at least one of the chemical elements exceeds those listed above (including, *e.g.,* ASTM specifications A543, A387, A514, A517, and A506).
—SAE/AISI grades of series 2300 and higher.
—Ball bearing steels, as defined in the HTSUS.
—Tool steels, as defined in the HTSUS.
—Silico-manganese (as defined in the HTSUS) or silicon electrical steel with a silicon level exceeding 1.50 percent.
—ASTM specifications A710 and A736.
—USS Abrasion-resistant steels (USS AR 400, USS AR 500).
—Hot-rolled steel coil which meets the following chemical, physical and mechanical specifications:

C	Mn	P	S	Si	Cr	Cu	Ni
0.10–0.14%	0.90% Max	0.025% Max	0.005% Max	0.30–0.50%	0.50–0.70%	0.20–0.40%	0.20% Max

Width = 44.80 inches maximum; Thickness = 0.063–0.198 inches; Yield Strength = 50,000 ksi minimum; Tensile Strength = 70,000–88,000 psi.

—Hot-rolled steel coil which meets the following chemical, physical and mechanical specifications:

C	Mn	P	S	Si	Cr	Cu	Ni	Mo
0.10–0.16%	0.70–0.90%	0.025% Max	0.006% Max	0.30–0.50%	0.50–0.70%	0.25% Max	0.20% Max	0.21% Max

Width = 44.80 inches maximum; Thickness = 0.350 inches maximum; Yield Strength = 80,000 ksi minimum; Tensile Strength = 105,000 psi Aim.

—Hot-rolled steel coil which meets the following chemical, physical and mechanical specifications:

C	Mn	P	S	Si	Cr	Cu	Ni	V(wt.)	Cb
0.10–0.14%	1.30–1.80%	0.025% Max	0.005% Max	0.30–0.50%	0.50–0.70%	0.20–0.40%	0.20% Max	0.10 Max	0.08% Max

Width = 44.80 inches maximum; Thickness = 0.350 inches maximum; Yield Strength = 80,000 ksi minimum; Tensile Strength = 105,000 psi Aim.

—Hot-rolled steel coil which meets the following chemical, physical and mechanical specifications:

C	Mn	P	S	Si	Cr	Cu	Ni	Nb	Ca	Al
0.15% Max	1.40% Max	0.025% Max	0.010% Max	0.50% Max	1.00% Max	0.50% Max	0.20% Max	0.005% Min	Treated	0.01–0.07%

Width = 39.37 inches; Thickness = 0.181 inches maximum; Yield Strength = 70,000 psi minimum for thicknesses ≤0.148 inches and 65,000 psi minimum for thicknesses >0.148 inches; Tensile Strength = 80,000 psi minimum.

—Hot-rolled dual phase steel, phase-hardened, primarily with a ferritic-martensitic microstructure, contains 0.9 percent up to and including 1.5 percent silicon by weight, further characterized by either (i) tensile strength between 540 N/mm² and 640 N/mm² and an elongation percentage 26 percent for thicknesses of 2 mm and above, or (ii) a tensile strength between 590 N/mm² and 690 N/mm² and an elongation percentage 25 percent for thicknesses of 2 mm and above.

—Hot-rolled bearing quality steel, SAE grade 1050, in coils, with an inclusion rating of 1.0 maximum per ASTM E 45, Method A, with excellent surface quality and chemistry restrictions as follows:
—0.012 percent maximum phosphorus, 0.015 percent maximum sulfur, and 0.20 percent maximum residuals including 0.15 percent maximum chromium.
—Grade ASTM A570–50 hot-rolled steel sheet in coils or cut lengths, width of 74 inches (nominal, within ASTM tolerances), thickness of 11 gauge (0.119 inch nominal), mill edge and skin passed, with a minimum copper content of 0.20%.

The merchandise subject to this order is classified in the HTSUS at subheadings: 7208.10.15.00, 7208.10.30.00, 7208.10.60.00, 7208.25.30.00, 7208.25.60.00, 7208.26.00.30, 7208.26.00.60, 7208.27.00.30, 7208.27.00.60, 7208.36.00.30, 7208.36.00.60, 7208.37.00.30, 7208.37.00.60, 7208.38.00.15, 7208.38.00.30, 7208.38.00.90, 7208.39.00.15, 7208.39.00.30, 7208.39.00.90, 7208.40.60.30, 7208.40.60.60, 7208.53.00.00, 7208.54.00.00, 7208.90.00.00, 7210.70.30.00, 7210.90.90.00, 7211.14.00.30, 7211.14.00.90, 7211.19.15.00, 7211.19.20.00, 7211.19.30.00, 7211.19.45.00, 7211.19.60.00, 7211.19.75.30, 7211.19.75.60, 7211.19.75.90, 7212.40.10.00, 7212.40.50.00, 7212.50.00.00. Certain hot-rolled flat-rolled carbon-quality steel covered by this order, including: Vacuum degassed, fully stabilized; high strength low alloy; and the substrate for motor lamination steel may also enter under the following tariff numbers: 7225.11.00.00, 7225.19.00.00, 7225.30.30.50, 7225.30.70.00, 7225.40.70.00, 7225.99.00.90, 7226.11.10.00, 7226.11.90.30, 7226.11.90.60, 7226.19.10.00, 7226.19.90.00, 7226.91.50.00, 7226.91.70.00, 7226.91.80.00, and 7226.99.01.80.

Although the HTSUS subheadings are provided for convenience and Customs purposes, the written description of the merchandise under this order is dispositive.

Analysis of Comments Received

All issues raised in the case and rebuttal briefs by interested parties in this administrative review are addressed in the "Issues and Decision Memorandum for the Final Results of the Antidumping Duty Administrative Review of Certain Hot-Rolled Flat-Rolled Carbon Quality Steel Products from Brazil" (Issues and Decision Memorandum), from Susan H. Kuhbach, Acting Deputy Assistant Secretary for Antidumping and Countervailing Duty Operations, to Ronald K. Lorentzen, Deputy Assistant Secretary for Import Administration, dated October 12, 2010, which is hereby adopted by this notice. A list of all issues, which parties have raised and to which we have responded, in the Issues and Decision Memorandum is attached to this notice as an appendix. Parties can find a complete discussion of all issues raised in this review and the corresponding recommendations in this public memorandum, which is on file in the Central Records Unit in room 7046 of the main Commerce building. In addition, a complete version of the Issues and Decision Memorandum can be accessed directly via the Internet at *http://www.ia.ita.doc.gov/fm/index.html.* The paper copy and electronic version of the Issues and Decision Memorandum are identical in content.

Changes Since the Preliminary Results

Since the *Preliminary Results,* and based upon comments received from parties in their respective case and rebuttal briefs and findings at the sales verification, we have made several changes to USIMINAS' margin calculation. These changes are discussed in the relevant sections of the Issues and Decision Memorandum, where applicable, and the Memorandum to the File, from Patrick S. Edwards, Case Analyst, titled "Final Results of Antidumping Duty Administrative Review of Certain Hot-Rolled Flat-Rolled Carbon Quality Steel Products from Brazil: Analysis of the Sales Responses Submitted by Usinas Siderurgicas de Minas Gerais (USIMINAS) and Companhia Siderurgica Paulista (COSIPA)," dated October 12, 2010 (Final Analysis Memorandum).

Partial Adverse Facts Available

As noted in the USIMINAS Sales Verification Report, USIMINAS had reported interest revenue received on certain transactions in the comparison market during the POR. However, as found during the sales verification, USIMINAS was unable to demonstrate that the interest revenue reported was attributable to subject merchandise, nor that the company captured all relevant receipts of interest revenue on subject sales in its databases. *See* USIMINAS Sales Verification Report at 5–6. As such, the interest revenue reported on USIMINAS' comparison market sales was unverifiable. *See* USIMINAS Sales Verification Report at 5 and Exhibit 1 for complete details and an explanation of this finding.

Section 776(a) of the Tariff Act of 1930, as amended (the Act), provides that the Department shall apply "facts otherwise available" (FA) if, (1) necessary information is not on the record, or (2) an interested party or any other person: (A) Withholds information that has been requested, (B) fails to provide information within the deadlines established, or in the form and manner requested by the Department, subject to subsections (c)(1) and (e) of section 782 of the Act, which (C) significantly impedes a proceeding, or (D) provides information that cannot be verified as provided by section 782(i) of the Act.

Section 776(b) of the Act further provides that the Department may use an adverse inference in applying the facts otherwise available when a party has failed to cooperate by not acting to the best of its ability to comply with a request for information. *See* Statement of Administrative Action, accompanying the Uruguay Round Agreements Act, H.R. no. 103–316, Vol. 1 (1994) (SAA), at 870; *see also, Notice of Final Determination of Sales at Less Than Fair Value: Certain Cold-Rolled Flat-Rolled Carbon-Quality Steel Products from the Russian Federation,* 65 FR 5510, 5518 (February 4, 2000) (*Russian Cold-Rolled*). Such an adverse inference may include reliance on information derived from the petition, the final determination, a previous administrative review, or other information placed on the record. *See* section 776(b) of the Act.

Although USIMINAS provided an explanation at the onset of its sales verification with regard to the error in its reported, and potentially unreported, comparison market interest revenue (which was disclosed as a minor correction), we find that the systemic nature of these incorrect and unverifiable revenue receipts constitute a greater concern than that of a minor correction disclosure, as the extent to which interest revenue receipts are either unreported or reported incorrectly remains unascertainable. Ultimately, USIMINAS failed to provide accurate and timely data in this capacity and, furthermore, these specific data were unable to be verified by the Department. Since USIMINAS failed to provide accurate and complete information regarding its comparison market interest revenue, despite the many opportunities available to the company to correct and supply this information, we have determined, pursuant to sections 776(a)(1) and (2)(B)

of the Act, that it is appropriate to base USIMINAS' dumping margin, in part, on FA.

Furthermore, in selecting from among the FA, we have determined, pursuant to section 776(b) of the Act, it is appropriate to use an adverse inference (AFA) because USIMINAS failed to cooperate by not acting to the best of its ability to comply with requests for information in this regard. *See Nippon Steel Corporation* v. *United States,* 337 F.3d 1373, 1383 (Fed. Cir. 2003), where the Court of Appeals for the Federal Circuit provided an explanation of the "failure to act to the best of its ability" standard noting that the Department need not show intentional conduct existed on the part of the respondent, but merely that a "failure to cooperate to the best of a respondent's ability" existed (*i.e.,* information was not provided "under circumstances in which it is reasonable to conclude that less than full cooperation has been shown"). Therefore, the Department finds that, in selecting from among the facts available, an adverse inference is appropriate. Adverse inferences are appropriate "to ensure that the party does not obtain a more favorable result by failing to cooperate than if it had cooperated fully." *Id.*

We have therefore employed AFA with regard to USIMINAS' reported comparison market interest revenue earned on late payments, used in the calculation of USIMINAS' overall dumping margin for these final results. We have used USIMINAS' own reported information on the record of the instant review to derive these interest revenue amounts and, therefore, find that the rate is fully corroborated. *See* section 776(c) of the Act. Furthermore, as demonstrated in the Department's Final Analysis Memorandum, we have limited the application of AFA to only those customers which issued an interest revenue payment during the POR. Rather than applying these AFA interest revenue payments to all comparison market sales observations, we find this methodology to be conservative and reflective of the fact that interest revenue payments are recorded in USIMINAS' accounting system on a customer-specific basis. *See* USIMINAS Sales Verification Report at 5. For a complete explanation of the methodology used to calculate these AFA interest revenue payments, *see* Final Analysis Memorandum at 4.

Final Results of Review

We determine the following weighted average percentage margin exists for the period March 1, 2008, through February 28, 2009:

Manufacturer/Exporter	Weighted average margin (percentage)
Usinas Siderurgicas de Minas Gerais (USIMINAS)/ Companhia Siderurgica Paulista (COSIPA)	5.16

Assessment

The Department will determine, and U.S. Customs and Border Protection (CBP) shall assess, antidumping duties on all appropriate entries, pursuant to section 751(a)(1) of the Act, and 19 CFR 351.212(b). The Department calculated an assessment rate for each importer of the subject merchandise covered by the review. Upon issuance of the final results of this review, for any importer-specific assessment rates calculated in the final results that are above *de minimis* (*i.e.,* at or above 0.50 percent), we will issue appraisement instructions directly to CBP to assess antidumping duties on appropriate entries by applying the per-unit dollar amount against each unit of merchandise on each of that importer's entries during the review period. *See* 19 CFR 351.212(b)(1). The Department intends to issue assessment instructions to CBP 15 days after the date of publication of these final results of review.

The Department clarified its "automatic assessment" regulation on May 6, 2003. *See Antidumping and Countervailing Duty Proceedings: Assessment of Antidumping Duties,* 68 FR 23954 (May 6, 2003). This clarification will apply to entries of subject merchandise during the POR produced by USIMINAS or COSIPA for which either company did not know the merchandise was destined for the United States. In such instances, we will instruct CBP to liquidate unreviewed entries at the all-other's rate if there is no company-specific rate for an intermediary involved in the transaction.

Cash Deposit Requirements

The following cash deposit requirements will be effective upon publication of these final results for all shipments of the subject merchandise entered, or withdrawn from warehouse, for consumption on or after the publication date of these final results of administrative review, consistent with section 751(a)(1) of the Act: (1) The cash deposit rate for the reviewed company will be the rate listed above; (2) if the exporter is not a firm covered in this review, but was covered in a previous review or the original less-than-fair-value (LTFV) investigation, the cash deposit rate will continue to be the company-specific rate published for the most recent period; (3) if the exporter is not a firm covered in this review, a prior review, or the original LTFV investigation, but the manufacturer is, the cash deposit rate will be the rate established for the most recent period for the manufacturer of the merchandise; and (4) the cash deposit rate for all other manufacturers or exporters will continue to be 42.12 percent, the all-others rate established in the LTFV investigation. *See Antidumping Duty Order: Certain Hot-Rolled Flat-Rolled Carbon Quality Steel Products from Brazil,* 67 FR 11093 (March 12, 2002). These deposit requirements, when imposed, shall remain in effect until further notice.

Notifications to Interested Parties

This notice also serves as a final reminder to importers of their responsibility under 19 CFR 351.402(f)(2) to file a certificate regarding the reimbursement of antidumping duties prior to liquidation of the relevant entries during this review period. Failure to comply with this requirement could result in the Department's presumption that reimbursement of the antidumping duties occurred and the subsequent assessment of doubled antidumping duties.

This notice also serves as a reminder to parties subject to administrative protective orders (APOs) of their responsibility concerning the disposition of proprietary information disclosed under APO in accordance with 19 CFR 351.305, which continues to govern business proprietary information in this segment of the proceeding. Timely written notification of the return or destruction of APO materials or conversion to judicial protective order is hereby requested. Failure to comply with the regulations and the terms of an APO is a sanctionable violation.

This notice is issued and published in accordance with sections 751(a)(1) and 777(i)(1) of the Act.

Dated: October 12, 2010.

Ronald K. Lorentzen,

Deputy Assistant Secretary for Import Administration.

Appendix—List of Issues in Issues and Decision Memorandum—

Comment 1: Use of Exchange Rates from *Factiva*

Comment 2: Interest Income on Judicial Escrow Deposits

Comment 3: U.S. Credit Expense

[FR Doc. 2010–26270 Filed 10–18–10; 8:45 am]

BILLING CODE 3510–DS–P

DEPARTMENT OF COMMERCE

National Institute of Standards and Technology

Cloud Computing Forum & Workshop II

AGENCY: National Institute of Standards & Technology (NIST), Commerce.

ACTION: Notice of public workshop.

SUMMARY: NIST announces the Cloud Computing Forum & Workshop II to be held on November 4 and 5, 2010. This workshop will provide information on a Cloud Computing Roadmap Strategy as well as provide an updated status on NIST efforts to help develop open standards in interoperability, portability and security in cloud computing. The goals of this workshop are: Public announcement of the Cloud Computing Roadmap Strategy; engagement with interested parties on development of a neutral cloud computing reference architecture and taxonomy; defining target United States Government Cloud Computing Business Use Cases; and public announcement of access to the Standards Acceleration to Jumpstart the Adoption of Cloud Computing portal. Additional workshops will be announced in the **Federal Register**.

DATES: The Cloud Computing Forum & Workshop II will be held November 4 and 5, 2010. Attendees must register by Thursday, October 28, 2010.

ADDRESSES: On the first day of the event, November 4, panel discussions will be held at the National Institute of Standards and Technology, 100 Bureau Drive, Gaithersburg, MD 20899 in the Red Auditorium of the Administration Building, Building 101. The second day, November 5, will feature workshops held at the Gaithersburg Holiday Inn, 2 Montgomery Village Avenue, Gaithersburg, MD 20879. Please note admittance instructions under the **SUPPLEMENTARY INFORMATION** section of this notice.

FOR FURTHER INFORMATION CONTACT: For further information contact Robert Bohn by e-mail at *robert.bohn@nist.gov* or by phone at (301) 975–2900. To register, go to: *https://www-s.nist.gov/CRS/.*

SUPPLEMENTARY INFORMATION: NIST plans to host several cloud computing workshops. The workshop schedules, registration information, and a list of frequently asked questions regarding these workshops are posted on the Internet at: *http://www.nist.gov/itl/cloud/upcoming-events.cfm.*

On May 20, 2010, NIST hosted the first Cloud Computing Forum & Workshop. The purpose of that initial workshop was to respond to the request of the Federal Chief Information Officer to NIST to lead federal efforts on standards for data portability, cloud interoperability, and security. The workshop's goals were to initiate engagement with industry to accelerate the development of cloud standards for interoperability, portability, and security; introduce NIST Cloud Computing efforts; and discuss the Federal Government's experience with cloud computing.

The purpose of the second Cloud Computing Forum & Workshop II, to be held on November 4 and 5, 2010, is to report on the status of these efforts and to socialize the NIST strategy to collaboratively develop a Cloud Computing Roadmap among multiple federal and industrial stakeholders, and to advance a dialogue between these groups. To frame the discussions, the United States Chief Information Officer and Director of the National Institute of Standards and Technology will present their vision on the first day, November 4. Panel discussions will consider the roles of standard organizations and ad-hoc standards in the cloud; need and use of a reference architecture to support cloud adoption; key cloud computing issues and proposed solutions; security in the cloud; and international aspects of cloud computing. Breakout sessions on the following day, November 5, designed to actively engage stakeholders, will discuss these issues, and develop a series of next steps for the effort in cloud computing standards.

All visitors to the NIST site are required to pre-register to be admitted and have appropriate government-issued photo ID to gain entry to NIST. Anyone wishing to attend this meeting must register at *https://www-s.nist.gov/CRS/* by close of business Thursday, October 28, 2010, in order to attend.

Dated: October 14, 2010.

Harry S. Hertz,

Director, Baldrige National Quality Program.

[FR Doc. 2010–26303 Filed 10–18–10; 8:45 am]

BILLING CODE 3510–13–P

DEPARTMENT OF COMMERCE

Bureau of Industry and Security

Information Systems Technical Advisory Committee; Notice of Partially Closed Meeting

The Information Systems Technical Advisory Committee (ISTAC) will meet on November 3 and 4, 2010, 9 a.m., in the Herbert C. Hoover Building, Room 3884, 14th Street between Constitution and Pennsylvania Avenues, NW., Washington, DC. The Committee advises the Office of the Assistant Secretary for Export Administration on technical questions that affect the level of export controls applicable to information systems equipment and technology.

Wednesday, November 3

Public Session

1. Welcome and Introductions.
2. Working Group Reports.
3. Fault Tolerant Computer 4.A.3.a.
4. Intel Technology Roadmap.
5. New Business.
6. Closed Session.

Thursday, November 4

Closed Session

7. Discussion of matters determined to be exempt from the provisions relating to public meetings found in 5 U.S.C. app. 2 §§ 10(a)(1) and 10(a)(3).

The open session will be accessible via teleconference to 20 participants on a first come, first serve basis. To join the conference, submit inquiries to Ms. Yvette Springer at *Yspringer@bis.doc.gov,* no later than October 26, 2010.

A limited number of seats will be available for the public session. Reservations are not accepted. To the extent time permits, members of the public may present oral statements to the Committee. The public may submit written statements at any time before or after the meeting. However, to facilitate distribution of public presentation materials to Committee members, the Committee suggests that public presentation materials or comments be forwarded before the meeting to Ms. Springer.

The Assistant Secretary for Administration, with the concurrence of the delegate of the General Counsel, formally determined on December 23, 2009, pursuant to Section 10(d) of the Federal Advisory Committee Act, as amended (5 U.S.C. app. 2 § (10)(d)), that the portion of the meeting concerning trade secrets and commercial or financial information deemed privileged or confidential as described in 5 U.S.C. 552b(c)(4) and the portion of the meeting concerning matters the disclosure of which would be likely to frustrate significantly implementation of an agency action as described in 5 U.S.C. 552b(c)(9)(B) shall be exempt from the provisions relating to public meetings found in 5 U.S.C. app. 2 §§ 10(a)(1) and 10(a)(3). The remaining portions of the meeting will be open to the public.

For more information, call Yvette Springer at (202) 482–2813.

Dated: October 14, 2010.

Yvette Springer,

Committee Liaison Officer.

[FR Doc. 2010–26295 Filed 10–18–10; 8:45 am]

BILLING CODE 3510–JT–P

DEPARTMENT OF COMMERCE

International Trade Administration

[A–570–912]

Certain New Pneumatic Off-the-Road Tires From the People's Republic of China: Preliminary Results of Antidumping Duty Administrative Review

AGENCY: Import Administration, International Trade Administration, Department of Commerce.

SUMMARY: The Department of Commerce ("the Department") is conducting an administrative review of the antidumping duty order on certain new pneumatic off-the-road tires ("OTR tires") from the People's Republic of China ("PRC") covering the period February 20, 2008, through August 31, 2009. The administrative review ("AR") covers six exporters. We have preliminarily determined that certain exporters who participated fully and are entitled to a separate rate sold subject merchandise to the United States at prices below normal value ("NV") during the period of review ("POR"). If these preliminary results are adopted in our final results of review, we will instruct U.S. Customs and Border Protection ("CBP") to assess antidumping duties on entries of subject merchandise during the POR for which the importer-specific assessment rates are above *de minimis.*

We invite interested parties to comment on these preliminary results. We intend to issue the final results no later than 120 days from the date of publication of this notice, pursuant to section 751(a)(3)(A) of the Tariff Act of 1930, as amended ("the Act").

DATES: *Effective Date:* October 19, 2010.

FOR FURTHER INFORMATION CONTACT: Raquel Silva or Lilit Astvatsatrian, AD/CVD Operations, Office 8, Import Administration, International Trade Administration, U.S. Department of Commerce, 14th Street and Constitution Avenue, NW., Washington, DC 20230; telephone: (202) 482–6475 or (202) 482–6412, respectively.

SUPPLEMENTARY INFORMATION:

Background

On September 4, 2008, the Department published the antidumping duty order on OTR Tires from the PRC. *See Certain New Pneumatic Off-the-Road Tires From the People's Republic of China: Notice of Amended Final Affirmative Determination of Sales at Less Than Fair Value and Antidumping Duty Order,* 73 FR 51624 (September 4, 2008). On September 1, 2009, the Department published a notice of opportunity to request an administrative review of this order for the February 20, 2008, through, August 31, 2009, POR (hereinafter referred to as the 2008–2009 review). *See Antidumping or Countervailing Duty Order, Finding, or Suspended Investigation; Opportunity to Request Administrative Review,* 74 FR 45179 (September 1, 2009). In accordance with 19 CFR 351.213(b), interested parties made requests for review between September 23, 2009, and September 30, 2009, on fifteen exporters. On October 26, 2009, the Department initiated the 2008–2009 review.[1] GPX International Tire Corporation ("GPX") requested that the Department conduct a review of exports of eight of the fifteen exporters. On November 20, 2009, GPX withdrew its review request for seven of the eight exporters for which it requested review, but maintained its request that the Department conduct a review of Hebei Starbright Tire Co., Ltd. ("Starbright"). On January 22, 2010, the Department selected Starbright and TUTRIC as mandatory respondents. Between November 24, 2009, and February 24, 2010, three more parties withdrew their respective review requests related to these same exporters, including TUTRIC. On May 21, 2010, the Department rescinded the administrative reviews of OTR tires with respect to TUTRIC and seven additional exporters because all parties requesting reviews of these entities had withdrawn their respective requests.[2]

On January 28, 2010, Hanify & King, bankruptcy counsel to GPX, informed the Department of GPX's filing of a Chapter 11 petition under the United States Bankruptcy Code on October 26, 2009, which counsel claimed automatically stayed the Department's administrative proceedings with respect to GPX. On February 3, 2010, both domestic interested parties[3] submitted letters to the Department expressing concerns about the effect of GPX's bankruptcy petition on the ongoing administrative review. In response to parties' concerns, the Department extended regulatory deadlines for Titan and Bridgestone until resolution of those concerns. On February 12, 2010, as a result of Government closures during snowstorms, Import Administration tolled all deadlines by one calendar week. *See* Memorandum from DAS for Import Administration, "Tolling of Administrative Deadlines As A Result of the Government Closure During the Recent Snowstorm," dated February 12, 2010, available at *http://ia.ita.doc.gov/ia-highlights-and-news.html.* On May 5, 2010, upon resolution of issues related to GPX's bankruptcy petition, the Department extended the deadlines for (1) Verification requests, (2) factual information submissions, (3) comments on surrogate country selection, and (4) submission of publicly available information for valuing factors of production.

On May 5, 2010, the Department selected Qingdao Free Trade Zone Full World International Trading Co., Ltd. ("Full-World") as the mandatory respondent to replace TUTRIC. On May 26, 2010, Full-World withdrew its request for an administrative review of its exports. On August 4, 2010, the Department published in the **Federal Register** a notice rescinding the administrative review of OTR tires with respect to Full-World.[4]

On June 7, 2010, the Department published in the **Federal Register** a notice fully extending the time limit for the preliminary results of this review to October 7, 2010. *See New Pneumatic Off-the-Road Tires from the People's Republic of China: Extension of Preliminary Results of Antidumping*

[1] *See Initiation of Antidumping and Countervailing Duty Administrative Reviews and Request for Revocation in Part,* 74 FR 54956, 54958 (October 26, 2009) ("*Initiation Notice*"). The Department initiated reviews of (1) Aeolus Tyre Co., Ltd. ("Aeolus"), (2) Guizhou Tire Co., Ltd. ("GTC"), (3) Hanghzou Zhongce Rubber Co., Ltd. ("Hangzhou Zhongce"), (4) Starbright, (5) Innova Rubber Co., Ltd. ("Innova"), (6) Jiangsu Feichi Co., Ltd. ("Feichi"), (7) KS Holding Limited/KS Resources Limited ("KS Ltd."), (8) Laizhou Xiongying Rubber Industry Co., Ltd. (Laizhou Xiongying"), (9) Qingdao Free Trade Zone Full-World International Trading Co. ("Full World"), Ltd., (10) Qingdao Taifa Group Co., Ltd. (Qingdao Taifa"), (11) Shandong Huitong Tyre Co., Ltd. ("Huitong"), (12) Tianjin Wanda Tyre Group (Wanda"), (13) Tianjin United Tire & Rubber International Co., Ltd. ("TUTRIC"), (14) Triangle Tyre Co., Ltd. ("Triangle"), and (15) Weihai Zhongwei Rubber Co., Ltd. ("Weihai Zhongwei").

[2] *See New Pneumatic Off-the-Road Tires From the People's Republic of China: Notice of Partial Rescission of Antidumping Duty Administrative Review,* 75 FR 28567 (May 21, 2010). In addition to TUTRIC, the Department rescinded the reviews of Aeolus, Feichi, GTC, Huitong, Innova, Triangle and Wanda.

[3] Titan Tire Corporation ("Titan"), and Bridgestone Americas, Inc., and Bridgestone Americas Tire Operations, LLC (collectively "Bridgestone"), both domestic producers of the like product.

[4] *See New Pneumatic Off-the-Road Tires from the People's Republic of China: Notice of Partial Rescission of Antidumping Duty Administrative Review,* 75 FR 46917 (August 4, 2010).

Duty Administrative Review, 75 FR 32158 (June 7, 2010). On July 23, 2010, and July 29, 2010, parties submitted comments on surrogate country selection. On July 29, 2010, parties submitted comments on surrogate values. On August 10, 2010, parties submitted rebuttal comments on surrogate values. Between January 22, 2010, and September 1, 2010, the Department issued to Starbright the original antidumping questionnaire, and six supplemental questionnaires. Between February 24, 2010, and September 10, 2010, Starbright submitted timely responses to the Department's seven questionnaires.

Period of Review

The POR is February 20, 2008, through August 31, 2009.

Scope of Order

The products covered by the order are new pneumatic tires designed for off-the-road and off-highway use, subject to exceptions identified below. Certain OTR tires are generally designed, manufactured and offered for sale for use on off-road or off-highway surfaces, including but not limited to, agricultural fields, forests, construction sites, factory and warehouse interiors, airport tarmacs, ports and harbors, mines, quarries, gravel yards, and steel mills. The vehicles and equipment for which certain OTR tires are designed for use include, but are not limited to: (1) Agricultural and forestry vehicles and equipment, including agricultural tractors,[5] combine harvesters,[6] agricultural high clearance sprayers,[7] industrial tractors,[8] log-skidders,[9] agricultural implements, highway-towed implements, agricultural logging, and agricultural, industrial, skid-steers/mini-loaders; [10] (2) construction vehicles and equipment, including earthmover articulated dump products, rigid frame haul trucks,[11] front end loaders,[12] dozers,[13] lift trucks, straddle carriers,[14] graders,[15] mobile cranes,[16] compactors; and (3) industrial vehicles and equipment, including smooth floor, industrial, mining, counterbalanced lift trucks, industrial and mining vehicles other than smooth floor, skid-steers/mini-loaders, and smooth floor off-the-road counterbalanced lift trucks.[17] The foregoing list of vehicles and equipment generally have in common that they are used for hauling, towing, lifting, and/or loading a wide variety of equipment and materials in agricultural, construction and industrial settings. Such vehicles and equipment, and the descriptions contained in the footnotes are illustrative of the types of vehicles and equipment that use certain OTR tires, but are not necessarily all-inclusive. While the physical characteristics of certain OTR tires will vary depending on the specific applications and conditions for which the tires are designed (*e.g.,* tread pattern and depth), all of the tires within the scope have in common that they are designed for off-road and off-highway use. Except as discussed below, OTR tires included in the scope of the order range in size (rim diameter) generally but not exclusively from 8 inches to 54 inches. The tires may be either tube-type [18] or tubeless, radial or non-radial, and intended for sale either to original equipment manufacturers or the replacement market. The subject merchandise is currently classifiable under Harmonized Tariff Schedule of the United States ("HTSUS") subheadings: 4011.20.10.25, 4011.20.10.35, 4011.20.50.30, 4011.20.50.50, 4011.61.00.00, 4011.62.00.00, 4011.63.00.00, 4011.69.00.00, 4011.92.00.00, 4011.93.40.00, 4011.93.80.00, 4011.94.40.00, and 4011.94.80.00. While HTSUS subheadings are provided for convenience and customs purposes, our written description of the scope is dispositive.

Specifically excluded from the scope are new pneumatic tires designed, manufactured and offered for sale primarily for on-highway or on-road use, including passenger cars, race cars, station wagons, sport utility vehicles, minivans, mobile homes, motorcycles, bicycles, on-road or on-highway trailers, light trucks, and trucks and buses. Such tires generally have in common that the symbol "DOT" must appear on the sidewall, certifying that the tire conforms to applicable motor vehicle safety standards. Such excluded tires may also have the following designations that are used by the Tire and Rim Association:

Prefix Letter Designations

- P—Identifies a tire intended primarily for service on passenger cars;
- LT—Identifies a tire intended primarily for service on light trucks; and,
- ST—Identifies a special tire for trailers in highway service.

Suffix Letter Designations

- TR—Identifies a tire for service on trucks, buses, and other vehicles with rims having specified rim diameter of nominal plus 0.156″ or plus 0.250″
- MH—Identifies tires for Mobile Homes;
- HC—Identifies a heavy duty tire designated for use on "HC" 15" tapered rims used on trucks, buses, and other vehicles. This suffix is intended to differentiate among tires for light trucks, and other vehicles or other services, which use a similar designation.
- Example: 8R17.5 LT, 8R17.5 HC;
- LT—Identifies light truck tires for service on trucks, buses, trailers, and multipurpose passenger vehicles used in nominal highway service; and
- MC—Identifies tires and rims for motorcycles.

The following types of tires are also excluded from the scope: Pneumatic tires that are not new, including recycled or retreaded tires and used

[5] Agricultural tractors are dual-axle vehicles that typically are designed to pull farming equipment in the field and that may have front tires of a different size than the rear tires.

[6] Combine harvesters are used to harvest crops such as corn or wheat.

[7] Agricultural sprayers are used to irrigate agricultural fields.

[8] Industrial tractors are dual-axle vehicles that typically are designed to pull industrial equipment and that may have front tires of a different size than the rear tires.

[9] A log-skidder has a grappling lift arm that is used to grasp, lift and move trees that have been cut down to a truck or trailer for transport to a mill or other destination.

[10] Skid-steer loaders are four-wheel drive vehicles with the left-side drive wheels independent of the right-side drive wheels and lift arms that lie alongside the driver with the major pivot points behind the driver's shoulders. Skid-steer loaders are used in agricultural, construction and industrial settings.

[11] Haul trucks, which may be either rigid frame or articulated (*i.e.,* able to bend in the middle) are typically used in mines, quarries and construction sites to haul soil, aggregate, mined ore, or debris.

[12] Front loaders have lift arms in front of the vehicle. They can scrape material from one location to another, carry material in their buckets, or load material into a truck or trailer.

[13] A dozer is a large four-wheeled vehicle with a dozer blade that is used to push large quantities of soil, sand, rubble, *etc.,* typically around construction sites. They can also be used to perform "rough grading" in road construction.

[14] A straddle carrier is a rigid frame, engine-powered machine that is used to load and offload containers from container vessels and load them onto (or off of) tractor trailers.

[15] A grader is a vehicle with a large blade used to create a flat surface. Graders are typically used to perform "finish grading." Graders are commonly used in maintenance of unpaved roads and road construction to prepare the base course on to which asphalt or other paving material will be laid.

[16] *I.e.,* "on-site" mobile cranes designed for off-highway use.

[17] A counterbalanced lift truck is a rigid framed, engine-powered machine with lift arms that has additional weight incorporated into the back of the machine to offset or counterbalance the weight of loads that it lifts so as to prevent the vehicle from overturning. An example of a counterbalanced lift truck is a counterbalanced fork lift truck. Counterbalanced lift trucks may be designed for use on smooth floor surfaces, such as a factory or warehouse, or other surfaces, such as construction sites, mines, *etc.*

[18] While tube-type tires are subject to the scope of this proceeding, tubes and flaps are not subject merchandise and therefore are not covered by the scope of this proceeding, regardless of the manner in which they are sold (*e.g.,* sold with or separately from subject merchandise).

tires; non-pneumatic tires, including solid rubber tires; tires of a kind designed for use on aircraft, all-terrain vehicles, and vehicles for turf, lawn and garden, golf and trailer applications. Also excluded from the scope are radial and bias tires of a kind designed for use in mining and construction vehicles and equipment that have a rim diameter equal to or exceeding 39 inches. Such tires may be distinguished from other tires of similar size by the number of plies that the construction and mining tires contain (minimum of 16) and the weight of such tires (minimum 1500 pounds).

Non-Market Economy Country Status

No party contested the Department's treatment of the PRC as a non-market economy ("NME") country, and the Department has treated the PRC as an NME country in all past antidumping duty investigations and administrative reviews.[19] No interested party in this case has argued that we should do otherwise. Designation as an NME country remains in effect until it is revoked by the Department. *See* section 771(18)(C)(i) of the Act. As such, we continue to treat the PRC as an NME in this proceeding.

Surrogate Country

Section 773(c)(1) of the Act directs the Department to base NV on the NME producer's factors of production ("FOPs"), valued in a surrogate market economy ("ME") country or countries considered to be appropriate by the Department. In accordance with section 773(c)(4) of the Act, in valuing the FOPs, the Department shall use, to the extent possible, the prices or costs of the FOPs in one or more ME countries that are: (1) At a level of economic development comparable to that of the NME country; and (2) significant producers of comparable merchandise. The sources of the surrogate factor values are discussed under the "Normal Value" section below. *See* Memorandum to The File, "Preliminary Results of the 2008–2009 Administrative Review of New Pneumatic Off-the-Road Tires from the People's Republic of China: Surrogate Value Memorandum," dated concurrently with this notice ("Surrogate Value Memorandum").

The Department determined that India, Indonesia, Ukraine, Peru, the Philippines and Thailand are countries comparable to the PRC in terms of economic development.[20] Once we have identified the countries that are economically comparable to the PRC, we select an appropriate surrogate country by determining whether an economically comparable country is a significant producer of comparable merchandise and whether the data for valuing FOPs are both available and reliable.

The Department has determined that India is the appropriate surrogate country for use in this review. The Department based its decision on the following facts: (1) India is at a level of economic development comparable to that of the PRC; (2) India is a significant producer of comparable merchandise; and (3) India provides the best opportunity to use quality, publicly available data to value the FOPs. Titan and Bridgestone provided comments on July 23, 2010, and July 29, 2010, respectively, arguing that India is the appropriate surrogate country for use in this review. Additionally, the data submitted by Titan, Bridgestone and Starbright for our consideration as potential surrogate values are sourced from India.

Therefore, because India best represents the experience of producers of comparable merchandise operating in an ME, we have selected India as the surrogate country and, accordingly, have calculated NV using Indian prices to value the respondent's FOPs, when available and appropriate. *See* Surrogate Value Memorandum. We have obtained and relied upon publicly available information wherever possible.

Separate Rates

In the *Initiation Notice,* the Department applied a process by which exporters and producers not being individually reviewed may obtain separate-rate status in NME reviews. The process requires exporters and producers to submit a separate-rate status application ("SRA") or separate-rate status certification ("SRC").[21] However, the standard for eligibility for a separate rate (which is whether a firm can demonstrate an absence of both *de jure* and *de facto* government control over its export activities) has not changed. From November 30 to December 2, 2009, six exporters of the subject merchandise filed timely responses to the Department's SRAs or SRCs, as applicable.[22]

In proceedings involving NME countries, the Department has a rebuttable presumption that all companies within the country are subject to government control and, thus, should be assessed a single antidumping duty rate.[23] It is the Department's policy to assign all exporters of merchandise subject to review in an NME country this single rate unless an exporter can demonstrate that it is sufficiently independent so as to be entitled to a separate rate.[24] Exporters can demonstrate this independence through the absence of both *de jure* and *de facto* government control over export activities. The Department analyzes each entity exporting the subject merchandise under a test arising from the *Notice of Final Determination of Sales at Less Than Fair Value: Sparklers from the People's Republic of China,* 56 FR 20588, at Comment 1 (May 6, 1991) ("Sparklers"), as further developed in *Notice of Final Determination of Sales at Less Than Fair Value: Silicon Carbide from the People's Republic of China,* 59 FR 22585, 22587 (May 2, 1994) ("Silicon Carbide"). However, if the Department determines that a company is wholly foreign-owned or located in an ME, then an SRA analysis is not necessary to determine whether it is independent from government control.[25]

A. Separate-Rate Recipients[26]

1. Wholly Foreign-Owned

Starbright reported that during the POR it was wholly owned by GPX, a U.S. company, and KS Ltd. reported in its SRA that it is wholly-owned by a company located in Hong Kong. Therefore, consistent with the

[19] *See, e.g., Chlorinated Isocyanurates from the People's Republic of China: Final Results of Antidumping Duty Administrative Review, 73 FR 52645* (September 10, 2008); *see also Folding Metal Tables and Chairs from the People's Republic of China: Final Results of Antidumping Duty Administrative Review,* 74 FR 3560 (January 21, 2009).

[20] *See* Memoranda to Wendy J. Frankel, Office Director, AD/CVD Operations, Office 8, "Request for a List of Surrogate Countries for an Administrative Review of the Antidumping Duty Order Covering New Pneumatic Off-the-Road Tires from the People's Republic of China," dated January 25, 2010.

[21] *See* Policy Bulletin 05.1: Separate-Rates Practice and Application of Combination Rates in Antidumping Investigations involving Non-Market Economy Countries (April 5, 2005), available at *http://ia.ita.doc.gov/policy/bull05-1.pdf.*

[22] Hangzou Zhongce; Starbright; KS Ltd.; Laizhou Xiongying; Qingdao Taifa; and Weihai Zhongwei.

[23] *See, e.g., Certain Coated Paper Suitable for High-Quality Print Graphics Using Sheet-Fed Presses From the People's Republic of China: Notice of Preliminary Determination of Sales at Less Than Fair Value and Postponement of Final Determination,* 75 FR 24892, 24899 (May 6, 2010) (unchanged in *Certain Coated Paper Suitable for High-Quality Print Graphics Using Sheet-Fed Presses From the People's Republic of China: Final Determination of Sales at Less Than Fair Value, 75 FR 59217* (September 27, 2010)).

[24] *Id.*

[25] *See, e.g., Final Results of Antidumping Duty Administrative Review: Petroleum Wax Candles From the People's Republic of China,* 72 FR 52355, 52356 (September 13, 2007).

[26] All separate-rate applicants receiving a separate rate are hereby referred to collectively as the "SR Recipients;" this includes the mandatory respondent.

Department's practice, a further SRA analysis is not necessary to determine whether Starbright's and KS Ltd.'s export activities are independent from government control, and we have preliminarily granted a separate rate to Starbright and KS Ltd.[27]

2. Wholly Chinese-Owned Companies

Hangzhou Zhongce, Laizhou Xiongying, Qingdao Taifa, and Weihai Zhongwei stated that they are wholly Chinese-owned companies (collectively "PRC SR Applicants"). Therefore, the Department must analyze whether these respondents can demonstrate the absence of both *de jure* and *de facto* governmental control over export activities.

a. Absence of De Jure Control

The Department considers the following de jure criteria in determining whether an individual company may be granted a separate rate: (1) An absence of restrictive stipulations associated with an individual exporter's business and export licenses; (2) any legislative enactments decentralizing control of companies; and (3) other formal measures by the government decentralizing control of companies.[28]

The evidence provided by the PRC SR Recipients [29] supports a preliminary finding of *de jure* absence of governmental control based on the following: (1) An absence of restrictive stipulations associated with the individual exporters' business and export licenses; (2) there are applicable legislative enactments decentralizing control of the companies; and (3) there are formal measures by the government decentralizing control of companies.

b. Absence of De Facto Control

Typically, the Department considers four factors in evaluating whether each respondent is subject to *de facto* governmental control of its export functions: (1) Whether the export prices are set by or are subject to the approval of a governmental agency; (2) whether the respondent has authority to negotiate and sign contracts and other agreements; (3) whether the respondent has autonomy from the government in making decisions regarding the selection of management; and (4) whether the respondent retains the proceeds of its export sales and makes independent decisions regarding disposition of profits or financing of losses.[30] The Department has determined that an analysis of *de facto* control is critical in determining whether respondents are, in fact, subject to a degree of governmental control which would preclude the Department from assigning separate rates. The evidence placed on the record of this review by the PRC SR Recipients demonstrates an absence of *de jure* and *de facto* government control with respect to each of the exporters' exports of the merchandise under consideration, in accordance with the criteria identified in *Sparklers* and *Silicon Carbide.*

Rate for Non-Selected Companies

The statute and the Department's regulations do not address the establishment of a rate to be applied to individual companies not selected for examination where the Department limited its examination in an administrative review pursuant to section 777A(c)(2) of the Act. Generally, we have looked to section 735(c)(5) of the Act, which provides instructions for calculating the all-others rate in an investigation, for guidance when calculating the rate for respondents we did not examine in an administrative review. For the exporters subject to a review that were determined to be eligible for separate rate status, but were not selected as mandatory respondents, the Department generally weight-averages the rates calculated for the mandatory respondents, excluding any rates that are zero, de minimis, or based entirely on FA.[31] For this administrative review, the Department has calculated a positive margin for the single mandatory respondent, Starbright. Accordingly, for these preliminary results, consistent with our practice, the Department has preliminarily established a margin for the SR Recipients based on the rate calculated for the single mandatory respondent, Starbright.

Date of Sale

Section 401(i) of the Department's regulations states that:

> In identifying the date of sale of the subject merchandise or foreign like product, the Secretary normally will use the date of invoice, as recorded in the exporter or producer's records kept in the ordinary course of business. However, the Secretary may use a date other than the date of invoice if the Secretary is satisfied that a different date better reflects the date on which the exporter or producer establishes the material terms of sale.

See also Allied Tube and Conduit Corp. v. *United States,* 132 F. Supp. 2d 1087, 1090–1092 (CIT 2001) (upholding the Department's rebuttable presumption that invoice date is the appropriate date of sale). After examining the questionnaire responses and the sales documentation placed on the record by Starbright, we preliminarily determine that invoice date is the most appropriate date of sale for Starbright. Nothing on the record rebuts the presumption that invoice date should be the date of sale.

Normal Value Comparisons

To determine whether Starbright's sales of OTR tires to the United States were made at less than NV, we compared constructed export price ("CEP") to NV, as described in the "Constructed Export Price," and "Normal Value" sections of this notice, pursuant to section 771(35) of the Act.

Constructed Export Price

In accordance with section 772(b) of the Act, CEP is the price at which the subject merchandise is first sold (or agreed to be sold) in the United States before or after the date of importation by or for the account of the producer or exporter of such merchandise or by a seller affiliated with the producer or exporter, to a purchaser not affiliated with the producer or exporter, as adjusted under sections 772(c) and (d) of the Act. In accordance with section 772(b) of the Act, we used CEP for Starbright's sales because the sales were made by GPX, Starbright's U.S. affiliate in the United States.

We calculated CEP based on delivered prices to unaffiliated purchasers in the United States. In accordance with section 772(d)(1) of the Act, we made deductions from the starting price for billing adjustments, movement expenses, discounts and rebates, and selling expenses in the U.S. market. We made deductions from the U.S. sales price for movement expenses in accordance with section 772(c)(2)(A) of the Act. These included, where applicable, foreign inland freight and insurance from the plant to the port of

[27] *See, e.g., Notice of Final Determination of Sales at Less Than Fair Value: Creatine Monohydrate from the People's Republic of China,* 64 FR 71104, 71104–05 (December 20, 1999) (where the respondent was wholly foreign-owned and, thus, qualified for a separate rate).

[28] *See Sparklers,* 56 FR at 20589.

[29] Collective reference for all respondents receiving a separate rate in this administrative review.

[30] *See Silicon Carbide,* 59 FR at 22586–87; *see also Notice of Final Determination of Sales at Less Than Fair Value: Furfuryl Alcohol From the People's Republic of China,* 60 FR 22544, 22545 (May 8, 1995).

[31] *See, e.g., Wooden Bedroom Furniture from the People's Republic of China: Preliminary Results of Antidumping Duty Administrative Review, Preliminary Results of New Shipper Review and Partial Rescission of Administrative Review,* 73 FR 8273, 8279 (February 13, 2008) (unchanged in *Wooden Bedroom Furniture from the People's Republic of China: Final Results of Antidumping Duty Administrative Review and New Shipper Review,* 73 FR 49162 (August 20, 2008)).

exportation, foreign inland insurance, ocean freight, marine insurance, U.S. Customs duty, U.S. brokerage and handling, U.S. inland freight from port to the warehouse, warehousing expense and U.S. inland freight from the warehouse to the customer. In accordance with section 772(d)(1) of the Act, the Department deducted, where applicable, commissions, credit expenses, warranty expenses, inventory carrying costs and indirect selling expenses from the U.S. price, all of which relate to commercial activity in the United States. In calculating its reported indirect selling expenses, the company did not include a significant number of items that it later claimed should be excluded; however, it did not provide any substantiation for this claim. Accordingly, for purposes of these preliminary results of review, we have included these items in the indirect selling expense adjustment to U.S. price.[32] Further, we did not grant an offset to interest expenses for short-term interest income because Starbright did not demonstrate that any of GPX's interest income was generated from short-term assets. However, we will issue a post-preliminary supplemental questionnaire to Starbright requesting that it provide substantiating documentation for its claim that all of its originally excluded items should be excluded from indirect selling expenses, and provide Starbright an opportunity to provide evidence that any of GPX's interest income was short term in nature. In addition, we deducted CEP profit in accordance with sections 772(d)(3) and 772(f) of the Act. In accordance with section 772(d) of the Act, we calculated Starbright's credit expenses and inventory carrying costs based on the actual short-term interest rate reported for loans obtained by GPX during the POR.[33]

Normal Value

Section 773(c)(1) of the Act provides that, in the case of an NME, the Department shall determine NV using an FOP methodology if the merchandise is exported from an NME and the information does not permit the calculation of NV using home-market prices, third-country prices, or constructed value under section 773(a) of the Act.

The Department bases NV on FOPs because the presence of government controls on various aspects of NME economies renders price comparisons and the calculation of production costs invalid under our normal methodologies. Therefore, in these preliminary results, we have calculated NV based on FOPs in accordance with sections 773(c)(3) and (4) of the Act and 19 CFR 351.408(c). The FOPs include: (1) Hours of labor required; (2) quantities of raw materials employed; (3) amounts of energy and other utilities consumed; and (4) representative capital costs. In accordance with 19 CFR 351.408(c)(1), the Department normally uses publicly available information to value the FOPs. However, when a producer sources a meaningful amount of an input from an ME country and pays for it in ME currency, the Department may value the factor using the actual price paid for the input.[34] Further, the Department disregards prices it has reason to suspect may be subsidized.[35]

In accordance with the legislative history of the Omnibus Trade and Competitiveness Act of 1988, the Department continues to apply its long-standing practice of disregarding surrogate values if it has a reason to believe or suspect the source data may be subsidized.[36] In this regard, the Department has previously found that it is appropriate to disregard such prices from India, Indonesia, South Korea and Thailand because we have determined that these countries maintain broadly available, non-industry specific export subsidies.[37] Based on the existence of these subsidy programs that were generally available to all exporters and producers in these countries at the time of the POR, the Department finds that it is reasonable to infer that all exporters from India, Indonesia, South Korea and Thailand may have benefitted from these subsidies.

Factor Valuations

In accordance with section 773(c) of the Act, we calculated NV based on the FOPs reported by Starbright for the POR. To calculate NV, we multiplied the reported per-unit factor quantities by publicly available Indian surrogate values (except as noted below). In selecting the surrogate values, we considered the quality, specificity, public availability, and contemporaneity of the data. As appropriate, we adjusted input prices by including freight costs to render them delivered prices. Specifically, we added to Indian import surrogate values a surrogate freight cost using the shorter of the reported distance from the domestic supplier to the factory or the distance from the nearest seaport to the factory where appropriate (*i.e.,* where the sales terms for the ME inputs were not delivered to the factory). This adjustment is in accordance with the decision of the Federal Circuit in *Sigma Corp.* v. *United States,* 117 F. 3d 1401, 1408 (Fed. Cir. 1997). For a detailed description of all surrogate values used for Starbright, *see* the Surrogate Value Memorandum.

In past cases, it has been the Department's practice to value various FOPs using import statistics of the primary selected surrogate country from World Trade Atlas ("WTA"), as published by Global Trade Information Services ("GTIS").[38] However, in October 2009, the Department learned that Indian import data obtained from the WTA, as published by GTIS, began identifying the original reporting currency for India as the U.S. Dollar. The Department then contacted GTIS about the change in the original

[32] *See* Memorandum to the File, "Certain New Pneumatic Off-The-Road Tires from the People's Republic of China: Analysis Memorandum for the Preliminary Determination: Hebei Starbright Tire Co., Ltd. ('Starbright')," dated October 7, 2010 ('Starbright Preliminary Analysis Memorandum").

[33] *See* Starbright Preliminary Analysis Memorandum.

[34] *See* 19 CFR 351.408(c)(1)*; see also Lasko Metal Products* v. *United States,* 43 F.3d 1442, 1445–1446 (Fed. Cir. 1994) (affirming the Department's use of market-based prices to value certain FOPs).

[35] *See, e.g., China National Machinery Import & Export Corp.* v. *United States,* 293 F. Supp. 2d 1334, 1339 (CIT 2003) (aff'd, 104 Fed. Appx. 183 (Fed. Cir. 2004)) ("*China National Machinery*"), and *see Frontseating Service Valves from the People's Republic of China; Preliminary Determination of Sales at Less Than Fair Value, Preliminary Negative Determination of Critical Circumstances, and Postponement of Final Determination,* 73 FR 62952 (October 22, 2008) (unchanged in *Frontseating Service Valves from the People's Republic of China: Final Determination of Sales at Less Than Fair Value and Final Negative Determination of Critical Circumstances,* 74 FR 10886 (March 13, 2009)) ("*Frontseating Service Valves*").

[36] Omnibus Trade and Competitiveness Act of 1988, Conf. Report to Accompany H.R. 3, H.R. Rep. No. 576, 100th Cong., 2nd Sess. (1988) at 590.

[37] *See, e.g., Carbazole Violet Pigment 23 from India: Final Results of the Expedited Five-year (Sunset) Review of the Countervailing Duty Order,* 75 FR 13257 (March 19, 2010), and accompanying Issues and Decision Memorandum at pages 4–5; *Certain Cut-to-Length Carbon Quality Steel Plate from Indonesia: Final Results of Expedited Sunset Review,* 70 FR 45692 (August 8, 2005), and accompanying Issues and Decision Memorandum at page 4; *Corrosion-Resistant Carbon Steel Flat Products from the Republic of Korea: Final Results of Countervailing Duty Administrative Review,* 74 FR 2512 (January 15, 2009), and accompanying Issues and Decision Memorandum at pages 17, 19–20; *Final Affirmative Countervailing Duty Determination: Certain Hot-Rolled Carbon Steel Flat Products from Thailand,* 66 FR 50410 (October 3, 2001), and accompanying Issues and Decision Memorandum at page 23.

[38] *See Certain Preserved Mushrooms from the People's Republic of China: Preliminary Results of Antidumping Duty New Shipper Review,* 74 FR 50946, 50950 (October 2, 2009) (unchanged in *Certain Preserved Mushrooms From the People's Republic of China: Final Results of Antidumping Duty New Shipper Review,* 74 FR 65520 (December 10, 2009)).

reporting currency for India from the Indian Rupee to the U.S. Dollar. Officials at GTIS explained that while GTIS obtains data on imports into India directly from the Ministry of Commerce, Government of India, as denominated and published in Indian Rupees, the WTA software is limited with regard to the number of significant digits it can manage. Therefore, GTIS made a decision to change the original reporting currency for Indian data from the Indian Rupee to the U.S. Dollar in order to reduce the loss of significant digits when obtaining data through the WTA software. GTIS explained that it converts the Indian Rupee to the U.S. Dollar using the monthly Federal Reserve exchange rate applicable to the relevant month of the data being downloaded and converted.[39]

However, the data reported in the Global Trade Atlas ("GTA") software published by GTIS reports import statistics, such as from India, in the original reporting currency and, thus, these data correspond to the original currency value reported by each country. Additionally, the data reported in the GTA software are reported to the nearest digit and, thus, there is not a loss of data by rounding, as there is with the data reported by the WTA software. Consequently, the Department will now obtain import statistics from GTA for valuing various FOPs because the GTA import statistics are in the original reporting currency of the country from which the data are obtained, and have the same level of accuracy as the original data released.

We further adjusted material input values to account for freight costs incurred between the supplier and respondent. We used the freight rates published by *http://www.infobanc.com,* "The Great Indian Bazaar, Gateway to Overseas Markets." The logistics section of the website contains inland freight truck rates between many large Indian cities. The truck freight rates are for the period August 2008 through July 2009. *See* Surrogate Value Memorandum.

Starbright made raw materials purchases from ME suppliers. Therefore, in accordance with our practice outlined in *Antidumping Methodologies: Market Economy Inputs,*[40] where at least 33 percent of an input is sourced from ME suppliers and purchased in an ME currency, the Department used actual weighted-average purchase prices to value these inputs.[41] Where the quantity of the input purchased from ME suppliers during the period is below 33 percent of the total volume of purchases of the input during the period, the Department weight-averaged the weighted average ME purchase price with an appropriate surrogate value.[42] *See Antidumping Methodologies: Market Economy Inputs.* For a complete description of the factor values we used, *see* the Surrogate Value Memorandum and the Starbright Preliminary Analysis Memorandum.

Where we could not obtain publicly available information contemporaneous with the POR with which to value FOPs, we adjusted the surrogate values using, where appropriate, the Indian Wholesale Price Index ("WPI") as published in the *International Financial Statistics* of the International Monetary Fund ("IMF").

To value electricity, we used price data for small, medium, and large industries, as published by the Central Electricity Authority of the Government of India in its publication entitled "Electricity Tariff & Duty and Average Rates of Electricity Supply in India," dated March 2008. These electricity rates represent actual country-wide, publicly-available information on tax-exclusive electricity rates charged to industries in India. We did not inflate this value because utility rates represent current rates, as indicated by the effective dates listed for each of the rates provided. *See* Surrogate Value Memorandum.

To value water, we used the revised Maharashtra Industrial Development Corporation ("MIDC") water rates available at *http://www.midcindia.com/water-supply. See* Surrogate Value Memorandum.

The Department valued brokerage and handling using a price list of export procedures necessary to export a standardized cargo of goods in India. The price list is compiled based on a survey case study of the procedural requirements for trading a standard shipment of goods by ocean transport in India that is published in *Doing Business 2010: India,* published by the World Bank. *See* Surrogate Value Memorandum.

To value steam coal, we used data obtained for grades A and B coal reported in the December 2007 Coal India Limited Circular. *See* Surrogate Value Memorandum.

To value warehousing, the Department used values obtained from the Board of Jawaharlal Nehru Port Trust's Web site,[43] a source identified and used in the less-than-fair-value investigation of this proceeding. *See Certain New Pneumatic Off-the-Road Tires From the People's Republic of China: Notice of Amended Final Affirmative Determination of Sales at Less Than Fair Value and Antidumping Duty Orde*r, 73 FR 51624 (Sept. 4, 2008), and accompanying Issues and Decision Memorandum at Comment 26. We applied these values to the average number of days that Starbright's subject merchandise is in inventory. *See* Surrogate Value Memorandum.

As a consequence of the decision of the Court of Appeals for the Federal Circuit ("Federal Circuit") in *Dorbest Ltd.* v. *United States,* 604 F. 3d 1363 (Fed. Cir. 2010), the Department is no longer relying on the regression-based wage rate described in 19 CFR 351.408(c)(3). The Department is continuing to evaluate options for determining labor values in light of the recent Federal Circuit decision. For these preliminary results, we have calculated an hourly wage rate to use in valuing the reported labor input by averaging earnings and/or wages in countries that are economically comparable to the PRC and that are significant producers of comparable merchandise. To calculate the hourly wage data, we used wage rate data reported by the International Labor Organization ("ILO"). Because an industry-specific dataset relevant to this proceeding exists within the Department's preferred ILO source, we will be using industry-specific data to calculate a surrogate wage rate for this review, in accordance with section 773(c)(1) of the Act.

For this review, the Department has calculated the wage rate using a simple average of the data provided to the ILO under Sub-Classification 25 of the ISIC–Revision[44] 3 standard by countries

[39] *See Certain Oil Country Tubular Goods from the People's Republic of China: Final Determination of Sales at Less Than Fair Value, Affirmative Final Determination of Critical Circumstances, and Final Determination of Targeted Dumping,* 75 FR 20335 (April 19, 2010), and accompanying Issues and Decision Memorandum at Comment 4.

[40] *See Antidumping Methodologies: Market Economy Inputs, Expected Non-Market Economy Wages, Duty Drawback; and Request for Comments,* 71 FR 61716, 61717–19 (October 19, 2006) ("*Antidumping Methodologies: Market Economy Inputs*").

[41] For a detailed description of all actual values used for market-economy inputs, see New-Tec Preliminary Analysis Memorandum dated concurrently with this notice.

[42] We did not accept all of Starbright's claimed market economy purchases; however due to the proprietary nature of this issue, please see further discussion in the Starbright Preliminary Analysis Memorandum.

[43] *http://www.jnport.gov.in/CMSPage.aspx?PageID=27.*

[44] The ILO industry-specific data is reported according to the International Standard Industrial Classification of all Economic Activities ("ISIC") code, which is maintained by the United Nations Statistical Division and is periodically updated. These updates are referred to as "Revisions." The ILO, an organization under the auspices of the

determined to be both economically comparable and significant producers to the PRC. Specifically, the Department finds the two-digit description under ISIC–Revision 3 ("Manufacture of Rubber and Plastics Products") to be the best available wage rate surrogate value on the record because it is specific and derived from industries that produce merchandise comparable to the subject merchandise. For further information on the calculation of the wage rate, see the Surrogate Value Memorandum.

To value factory overhead, selling, general, and administrative expenses, and profit, we used audited financial statements for the year ending March 31, 2009, of Falcon Tyres Ltd., and TVS Srichakra Limited, and the financial statement for the year ending December 31, 2008, of Goodyear India Limited, Indian producers of comparable merchandise.[45] For these preliminary results, the Department determined not to use audited financial statements of Govind Rubber Limited because the overwhelming amount of production is cycle tires and tubes, and auto tires and tubes accounted for less than 1 percent of production. Based upon that information, we find that Govind Rubber Limited does not produce comparable merchandise. In addition, the Department has declined to use audited financial statements of three other Indian producers, JK Industries Ltd., MRF Tyres Ltd. and Balkrishna Industries Limited, because there is evidence that each of these companies received subsidies under programs previously found by the Department to be countervailable.[46] Nevertheless, the Department may consider other publicly available financial statements for the final results, as appropriate.

In its original questionnaire response, Starbright stated that it does not produce any by-products, with the exception of a small amount of scrap tires. In a July 14, 2010, supplemental questionnaire, we requested that Starbright explain, as requested in the original questionnaire, the disposition of its by-products, and that it demonstrate the quantities of scrap product produced during the POR. In addition we asked Starbright to demonstrate that there is a commercial value to its claimed scrap through either sale, or the reintroduction into its production process. On August 17, 2010, Starbright provided a worksheet purportedly showing scrap production for July 2008; however it did not explain the worksheet or tie to any supporting documents. In this same response, Starbright also stated that it does not sell or reintroduce the scrap tires into production, but, if possible repaired and returned them to inventory. Because Starbright clearly and repeatedly stated that these scrap tires were neither sold nor re-used in production, but simply placed in inventory, it has not demonstrated that these scrap tires have any commercial value that would warrant a by-product offset.

On September 1, 2010, the Department requested for the third time that Starbright provide documentation to demonstrate the production, sale, and/or reintroduction of its scrap tires by-product, whereupon, on September 13, 2010, Starbright stated that due to time and staffing constraints, it had not been able to prepare the requested information. Because Starbright reported that it produced scrap tires but did not report or demonstrate that it sold or reintroduced the scrap tires into production and thus did not demonstrate either the production or commercial value of any such scrap, we have not granted Starbright its claimed by-product offset for tire scrap.

Adverse Facts Available

Sections 776(a)(1) and (2) of the Act provide that the Department shall apply "facts otherwise available" if, *inter alia,* necessary information is not on the record or an interested party or any other person: (A) Withholds information that has been requested; (B) fails to provide information within the deadlines established, or in the form and manner requested by the Department, subject to subsections (c)(1) and (e) of section 782 of the Act; (C) significantly impedes a proceeding; or (D) provides information that cannot be verified as provided by section 782(i) of the Act.

Where the Department determines that a response to a request for information does not comply with the request, section 782(d) of the Act provides that the Department will so inform the party submitting the response and will, to the extent practicable, provide that party the opportunity to remedy or explain the deficiency. If the party fails to remedy the deficiency within the applicable time limits and subject to section 782(e) of the Act, the Department may disregard all or part of the original and subsequent responses, as appropriate. Section 782(e) of the Act provides that the Department "shall not decline to consider information that is submitted by an interested party and is necessary to the determination but does not meet all applicable requirements established by the administering authority" if the information is timely, can be verified, is not so incomplete that it cannot be used, and if the interested party acted to the best of its ability in providing the information. Where all of these conditions are met, the statute requires the Department to use the information if it can do so without undue difficulties.

Section 776(b) of the Act further provides that the Department may use an adverse inference in applying the facts otherwise available when a party has failed to cooperate by not acting to the best of its ability to comply with a request for information. Section 776(b) of the Act also authorizes the Department to use as adverse facts available ("AFA") information derived from the petition, the final determination, a previous administrative review, or other information placed on the record.

For the reasons discussed below, we determine that, in accordance with sections 776(a)(2) and 776(b) of the Act, the use of partial AFA is appropriate for the preliminary results with respect to Starbright.

1. Products with Unreported Factors of Production

The original questionnaire states: "if you sold some products/models during the POR but did not produce them during the POR * * * please contact the official in charge before preparing your response to this section of the questionnaire."[47] However, in filing its

United Nation, utilizes this classification for reporting purposes. Currently, wage and earnings data are available from the ILO under the following revisions: ISIC–Rev.2, ISIC–Rev.3, and most recently, ISIC–Rev.4. The ISIC code establishes a two-digit breakout for each manufacturing category, and also often provides a three- or four-digit sub-category for each two-digit category. Depending on the country, data may be reported at either the two-, three- or four-digit subcategory. Sub-Classification 25 of the ISIC–Revision 3 covers "Manufacture of Rubber and Plastics Products".

[45] *See* Surrogate Value Memorandum.

[46] Specifically, JK Industries received subsidies under the Sales Tax Deferred from Government of Karnataka program (*see* page 40 of its financial statement), found by the Department to be countervailable. *See Notice of Preliminary Results and Rescission, in Part, of Countervailing Duty Administrative Review: Polyethylene Terephthalate Film, Sheet, and Strip from India,* 71 FR 45037 (August 8, 2006) (*8/8/2006 PET Film*). MRF Tyres received subsidies under the Export Promotion Capital Goods Scheme (see page 61 of its financial statement), found by the Department to be countervailable. *See Final Affirmative Countervailing Duty Determination: Bottle-Grade Polyethylene Terephthalate (PET) Resin From India,* 70 FR 13460 (March 21, 2005) (*3/21/2005 PET Resin*). Balkrishna Industries received subsidies under the Duty Entitlement Passbook Scheme (see page 32 of its financial statement), found by the Department to be countervailable. *See, e.g., 8/8/2006 PET Film* and *3/21/2005 PET Resin.*

[47] *See* Letter from the Department to Starbright, "Antidumping Duty Administrative Review of

Continued

questionnaire response, Starbright included several products in the reported U.S. sales list in its response to section C of the questionnaire for which it failed to provide any factors of production in its response to section D.[48] Furthermore, prior to submitting its response, Starbright never contacted the Department regarding this matter, despite the instructions in the questionnaire that it do so.

On July 1, 2010, the Department issued a supplemental questionnaire in which it asked Starbright to explain the missing product control numbers, and to provide FOPs for the product control numbers included in the section C database but missing from the section D database. In its August 2, 2010, response to the supplemental section C questionnaire, Starbright explained that these products were sold during the POR, but not produced during the POR. Starbright further stated that it would provide the FOP information for these products in its response to the section D supplemental questionnaire.[49]

On August 17, 2010 Starbright provided matching product control numbers in its FOP database for the products that it reported were sold during the POR but not produced during the POR. Starbright stated that it had "created similars" for the product control numbers that did not have matches in the FOP database, and that it had created a new variable in the FOP database for the "similar" product control number. Starbright also included a chart listing the control numbers for the products sold to the United States, and the similar control number created by Starbright.[50] However, based on Starbright's explanation that it sold these products during the POR but did not produce these products during the POR, it was not clear whether Starbright produced the products prior to the POR, or purchased the products from another producer and how it derived the FOPs it reported for these products (*e.g.,* did they reflect prior year's production, production of other products, or something else entirely). Thus, on September 1, 2010, in a second section D supplemental questionnaire, the Department asked that Starbright explain the origin of the merchandise sold during the POR but not produced by Starbright during the POR, and that Starbright provide evidence of its attempts to obtain FOP information from the producer or the merchandise if the products were purchased from another producer. The Department also explained that, if Starbright produced these products prior to the POR, it should provide the FOPs based on the prior production period (data it should have from the period of the investigation).

On September 13, 2010, Starbright argued that any request for FOPs based on the prior year's production would require a revision to its entire FOP database and refused to comply with the Department's request for the FOP data from the prior production period. However, Starbright failed to explain why having to report the prior year's FOPs for products not produced in the current POR would require a revision to the entire FOP database, since the prior year's reporting would only be necessary for the products sold but not produced during the instant POR. Starbright further contended that it was unable to provide the requested FOP data in such a short period of time.[51] Thus, Starbright disregarded the clear instructions in the original questionnaire, directing it to contact the Department if it had made sales of products during the POR that it did not produce during the POR. Starbright also refused to provide the information when requested by the Department in a supplemental questionnaire regarding the nature of what it had reported, thus rendering the data unusable. Moreover, Starbright provided no rationale for its creation of "similar" product control numbers for these products. Consequently, we preliminarily determine that partial facts available is warranted because necessary information is not on the record and because Starbright failed to provide requested information by the applicable deadlines and impeded the proceeding by not explaining the derivation of its reported "similar" FOPs. Section 776(a)(1), (a)(2)(B) and (a)(2)(C) of the Act. Moreover, by failing to notify the Department of the existence of sales for products not produced in the POR, despite the clear instruction in the questionnaire, and by failing to provide usable information by the applicable deadlines, the conditions of section 782(c)(1) and (e), to which Section 776(a)(2)(B) is subject, have not been satisfied. In addition, we determine that Starbright has not cooperated to the best of its ability by repeatedly failing to provide the requested FOP data from the production period, despite numerous opportunities to do so. Accordingly, an adverse inference in using facts available under section 776(b) of the Act is warranted for Starbright with regard to this specific information. For the products sold but not produced by Starbright during the POR as adverse facts available, we have applied the highest normal value for any control number in Starbright's FOP database. *See* Starbright Preliminary Analysis Memorandum.

2. Rebates

The original questionnaire instructs respondents: "where available, provide documentation, including sample agreements, for each type of rebate."[52] Starbright provided a chart in exhibit C–4 of its April 27, 2010, section C response, in which it summarized and calculated the rebates granted in 2008; however, Starbright provided no documentation to support its reported rebates, and no explanation as to why such documentation was unavailable. Furthermore, Starbright explained that it was still compiling information related to rebates granted in 2009.[53]

On July 1, 2010, the Department issued a supplemental questionnaire, in which it copied the question for the original questionnaire and requested that Starbright respond "in full."[54] In its August 2, 2010, supplemental questionnaire response, Starbright submitted a revised exhibit C–4, in which it "expanded the summary to detail all customer codes," but again provided no documentation, including copies of rebate agreements, and no explanation as to why it was unable to provide the requested information.[55]

On August 3, 2010, the Department requested that Starbright provide documentation to substantiate the rebate amounts for one sample customer reported in exhibit C–4 of its original section C response. On August 27, 2010, Starbright again revised its worksheet for 2008 rebates, and explained that the reported information "is from GPX's system. As such, GPX believes these amounts to be substantiated."[56] Starbright stated that based on information already provided, the

Certain New Pneumatic Off-the-Road Tires from the People's Republic of China: Questionnaire," dated January 22, 2010, at page D–1 ("Questionnaire").

[48] *See* Starbright's April 27, 2010, sections C and D questionnaire response.

[49] *See* Starbright's August 2, 2010, supplemental questionnaire response at 5.

[50] *See* Starbright's August 17, 2010, supplemental questionnaire response at 1 and Exhibit SD–2.

[51] *See* Starbright's September 13, 2010, supplemental questionnaire response at 19.

[52] *See* Questionnaire at C–23.

[53] *See* Starbright's April 27, 2010, sections C questionnaire response at 35 and Exhibit C–4.

[54] *See* Letter from the Department to Starbright: "First Administrative Review of the Antidumping Duty Order on New Pneumatic Off-the-Road Tires from the People's Republic of China: Supplemental Section C Questionnaire", dated July 1, 2010, at 7.

[55] *See* Starbright's August 2, 2010, supplemental questionnaire response at 22–24.

[56] *See id.* at 9.

Department "is able to calculate an antidumping margin that is substantiated by data and documentation drawn directly from GPX's accounting system."[57] With respect to the documentation that the Department repeatedly requested, such as copies of rebate agreements, Starbright stated that "it is virtually impossible for GPX to provide this documentation at this time."[58] According to Starbright, as a result of GPX's bankruptcy, "for all practical purposes, GPX, no longer exists * * * and the human staff has long since been dismissed."[59] As a result, Starbright argued that "it would be unduly burdensome to require GPX to provide this additional documentation."[60]

With respect to its 2009 rebates, Starbright reported one program related solely to a specific customer, and another rebate program related to another specific customer. Starbright explained the relevant customer codes to which these two rebate programs were allocable. Starbright also reported an additional rebate program, claiming that a group of buyers "joined together in order to receive better large-scale pricing and/or rebates, (similar to a cooperative)."[61] Stabright explained that it was "still working to allocate the rebates" for this customer grouping, on a customer and/or product code basis.[62] While Starbright reported the 2009 rebate rate for this rebate program, and claimed it could identify the full amount of the rebate paid, it stated that it could not identify the group of customers that participated in this rebate program, and thus it allocated the total claimed amount paid out over all 2009 U.S. sales of subject merchandise.

On September 1, 2010, the Department explained that Starbright had failed to provide the requested documentation to substantiate the reported rebate amount for a previously-selected sample customer. The Department again requested that Starbright provide a copy of the rebate agreement that established the rebate amount for that customer, as well as rebate receipts or any other documents that substantiate the numbers reported in Starbright's rebate worksheets.[63] The Department also asked Starbright to document efforts to obtain the requested information in light of its claim that it would be unduly burdensome to require GPX to provide that documentation.[64] In response, Starbright provided a credit memo used to grant the customer a credit in the amount of the rebate, but no documentation establishing the rebate rate, and no explanation for why it was unable to provide this documentation repeatedly requested by the Department.[65] Starbright has still not allocated rebates to the cooperative customer grouping discussed in its August 27, 2010, response, and nor has it identified the members of this customer grouping. In response to the Department's request for documentation of Starbright's efforts to access substantiating documents, Starbright submitted a letter from the attorney for the liquidating supervisor for GPX explaining that, due to GPX's liquidation, "complying with Commerce's demands is extremely difficult."[66] Starbright also submitted a declaration from a former GPX employee describing the liquidation process and a general summary of the employee's efforts to retrieve requested documents.[67] Neither submission nor the narrative provided to explain the submissions indicated any specific attempts to access the requested documents before September 2010, more than eight months after the Department first requested the information. Because Starbright did not provide the requested data the Department preliminary determines that it is appropriate to use facts available under sections 776(a)(1) and (a)(2)(B) of the Act. Because Starbright failed to promptly inform the Department of any difficulty in obtaining the data and failed to provide usable information by the applicable deadlines, the conditions of section 782(c)(1) and (e), to which section 776(a)(2)(B) is subject, have not been satisfied. Further, because Starbright did not satisfactorily demonstrate how it was unable to provide or unduly burdensome to provide the requested information, we determine that an adverse inference in using facts available under section 776(b) of the Act is warranted. As AFA, the Department is applying the reported rebate rate from this 2009 program to all 2009 sales for all customers, with the exception of the two customers identified by Starbright as having their own rebate programs. *See* Starbright Preliminary Analysis Memorandum.

Currency Conversion

We made currency conversions into U.S. dollars, where appropriate, in accordance with section 773A(a) of the Act, based on the exchange rates in effect on the dates of the U.S. sales, as certified by the Federal Reserve Bank.

Preliminary Results of Review

We preliminary find that the following margins exist:

Exporter	Percent margin
Hebei Starbright Tire Co., Ltd	20.74
Hanghzou Zhongce Rubber Co., Ltd.	20.74
KS Holding Limited/KS Resources Limited	20.74
Laizhou Xiongying Rubber Industry Co., Ltd.	20.74
Qingdao Taifa Group Co., Ltd	20.74
Weihai Zhongwei Rubber Co., Ltd	20.74

We have not made an adjustment to the U.S. price for export subsidies because Starbright was not found to have export subsidies in the most recently completed segment of the companion countervailing duty proceeding.[68]

Disclosure

We will disclose the calculations used in our analysis to parties to this proceeding within five days of the publication date of this notice. *See* 19 CFR 351.224(b). Interested parties are invited to comment on the preliminary results and may submit case briefs and/or written comments within 30 days of the date of publication of this notice. *See* 19 CFR 351.309(c). Interested parties may file rebuttal briefs and rebuttals to written comments, limited to issues raised in such briefs or comments, no later than five days after the date on which the case briefs are due. *See* 19 CFR 351.309(d). The Department requests that parties submitting written comments provide an executive summary and a table of authorities as well as an additional copy of those comments electronically.

Any interested party may request a hearing within 30 days of publication of this notice. *See* 19 CFR 351.310(c). If a request for a hearing is made, parties will be notified of the time and date for the hearing to be held at the U.S. Department of Commerce, 14th Street

[57] *See id.*

[58] *See id.*

[59] *See id.*

[60] *See id.* at 10.

[61] *See id.*

[62] *See id.*

[63] *See* Letter from the Department to Starbright: "First Administrative Review of the Antidumping Duty Order on New Pneumatic Off-the-Road Tires from the People's Republic of China: Third Supplemental Sections A, C, and D Questionnaire", dated September 1, 2010, at 5.

[64] *See id.* at 3–4.

[65] *See* Starbright's September 13, 2010, supplemental questionnaire response at 14.

[66] *See id* at 1–4 and Exhibit 4SA–1.

[67] *See id.*

[68] Similarly, because no export subsidies were found to be applicable to "all others" in the most recently completed segment of the companion countervailing duty proceeding, we also have not adjusted the rate applied to the separate rate recipients.

and Constitution Avenue, NW., Washington, DC 20230. *See* 19 CFR 351.310(d). The Department will issue the final results of this administrative review, which will include the results of its analysis of issues raised in any such comments, within 120 days of publication of these preliminary results, pursuant to section 751(a)(3)(A) of the Act.

Deadline for Submission of Publicly Available Surrogate Value Information

In accordance with 19 CFR 351.301(c)(3)(ii), the deadline for submission of publicly available information to value FOPs under 19 CFR 351.408(c) is 20 days after the date of publication of the preliminary results. In accordance with 19 CFR 351.301(c)(1), if an interested party submits factual information less than ten days before, on, or after (if the Department has extended the deadline), the applicable deadline for submission of such factual information, an interested party may submit factual information to rebut, clarify, or correct the factual information no later than ten days after such factual information is served on the interested party. However, the Department generally will not accept in the rebuttal submission additional or alternative surrogate value information not previously on the record, if the deadline for submission of surrogate value information has passed.[69] Furthermore, the Department generally will not accept business proprietary information in either the surrogate value submissions or the rebuttals thereto, as the regulation regarding the submission of surrogate values allows only for the submission of publicly available information. *See* 19 CFR 351.301(c)(3).

Assessment Rates

Upon issuance of the final results, the Department will determine, and CBP shall assess, antidumping duties on all appropriate entries covered by this review. The Department intends to issue assessment instructions to CBP 15 days after the publication date of the final results of this review. In accordance with 19 CFR 351.212(b)(1), we calculated exporter/importer (or customer)-specific assessment rates for the merchandise subject to this review.

Where the respondent reports reliable entered values, we calculate importer (or customer)-specific *ad valorem* rates by aggregating the dumping margins calculated for all U.S. sales to each importer (or customer) and dividing this amount by the total entered value of the sales to each importer (or customer). *See* 19 CFR 351.212(b)(1). Where an importer (or customer)-specific *ad valorem* rate is greater than *de minimis,* we will apply the assessment rate to the entered value of the importers'/customers' entries during the POR. *See* 19 CFR 351.212(b)(1). Where we do not have entered values for all U.S. sales, we calculate a per-unit assessment rate by aggregating the antidumping duties due for all U.S. sales to each importer (or customer) and dividing this amount by the total quantity sold to that importer (or customer).

To determine whether the duty assessment rates are *de minimis,* in accordance with the requirement set forth in 19 CFR 351.106(c)(2), we calculated importer (or customer)-specific *ad valorem* ratios based on the estimated entered value. Where an importer (or customer)-specific *ad valorem* rate is zero or *de minimis,* we will instruct CBP to liquidate appropriate entries without regard to antidumping duties. *See* 19 CFR 351.106(c)(2).

Cash Deposit Requirements

The following cash deposit requirements will be effective upon publication of the final results of this administrative review for all shipments of the subject merchandise entered, or withdrawn from warehouse, for consumption on or after the publication date, as provided for by section 751(a)(2)(C) of the Act: (1) For Starbright, Hangzhou Zhongce, KS Ltd., Laizhou Xiongying, Qingdao Taifa and Weihai Zhongwei, the cash deposit rate will be the company-specific rate established in the final results of this review (except, if the rate is zero or *de minimis,* no cash deposit will be required); (2) for previously investigated or reviewed PRC and non-PRC exporters not listed above that have separate rates, the cash deposit rate will continue to be the exporter-specific or exporter/producer-specific rate published for the most recent period; (3) for all PRC exporters of subject merchandise that have not been found to be entitled to a separate rate, the cash deposit rate will be the PRC-wide rate of 210.48 percent; and (4) for all non-PRC exporters of subject merchandise that have not received their own rate, the cash deposit rate will be the rate applicable to the PRC exporters that supplied that non-PRC exporter. These deposit requirements, when imposed, shall remain in effect until further notice.

Notification to Importers

This notice also serves as a preliminary reminder to importers of their responsibility under 19 CFR 351.402(f) to file a certificate regarding the reimbursement of antidumping duties prior to liquidation of the relevant entries during this review period. Failure to comply with this requirement could result in the Secretary's presumption that reimbursement of antidumping duties occurred and the subsequent assessment of double antidumping duties.

This determination is issued and published in accordance with sections 751(a)(1) and 777(i)(1) of the Act.

Dated: October 7, 2010.

Ronald K. Lorentzen,

Deputy Assistant Secretary for Import Administration.

[FR Doc. 2010–26193 Filed 10–18–10; 8:45 am]

BILLING CODE 3510–DS–P

[69] *See, e.g., Glycine from the People's Republic of China: Final Results of Antidumping Duty Administrative Review and Final Rescission, in Part,* 72 FR 58809 (October 17, 2007), and accompanying Issues and Decision Memorandum at Comment 2.

DEPARTMENT OF COMMERCE

International Trade Administration

[C–570–913]

New Pneumatic Off-the-Road Tires From the People's Republic of China: Preliminary Results of Countervailing Duty Administrative Review

AGENCY: Import Administration, International Trade Administration, Department of Commerce.

SUMMARY: The Department of Commerce (the Department) is conducting an administrative review of Hebei Starbright Tire Co., Ltd. (Starbright) under the countervailing duty order on certain new pneumatic off-the-road tires (OTR Tires) from the People's Republic of China (PRC) for the period December 17, 2007, through December 31, 2008. We preliminarily determine that subsidies are being provided to Starbright for the production and export of certain new pneumatic off-the-road tires from the PRC. *See* "Preliminary Results of Administrative Review" section, below. If the final results remain the same as the preliminary results of this review, we will instruct U.S. Customs and Border Protection (CBP) to assess countervailing duties at the rate indicated below. Interested parties are invited to comment on the preliminary results of this administrative review. *See* "Disclosure and Public Comments" section below.

DATES: *Effective Date:* October 19, 2010.

FOR FURTHER INFORMATION CONTACT: Andrew Huston or Jun Jack Zhao, AD/CVD Operations, Office 6, Import Administration, International Trade

Administration, U.S. Department of Commerce, 14th Street and Constitution Avenue, NW., Washington, DC 20230; telephone: (202) 482–4261 and (202) 482–1396, respectively.

SUPPLEMENTARY INFORMATION:

Background

On September 4, 2008, the Department published in the **Federal Register** the countervailing duty (CVD) order on OTR tires from the People's Republic of China. *See Certain New Pneumatic Off-the-Road Tires from the People's Republic of China: Countervailing Duty Order,* 73 FR 51627 (September 4, 2008). On September 1, 2009, the Department published a notice of opportunity to request an administrative review of the countervailing duty order on OTR Tires from the PRC. *See Antidumping or Countervailing Duty Order, Finding, or Suspended Investigation; Opportunity To Request Administrative Review,* 74 FR 45179 (September 1, 2009).

On September 8, 2009, GPX International Tire Corporation (GPX) requested on a timely basis an administrative review of the countervailing duty order on OTR Tires from the PRC for the period December 17, 2007 through December 31, 2008 for the following companies: Aeolus Tyre Co., Ltd., Guizhou Tire Co., Ltd., Hanghzou Zhongce Rubber Co., Ltd. (Zhongce), Starbright, Jiangsu Feichi Co., Ltd., Shandong Huitong Tyre Co., Ltd., Tianjin United Tire & Rubber International Co., Ltd. (TUTRIC), Tianjin Wanda Tyre Group, and Triangle Tyre Co., Ltd. On September 20, 2009, the Department received timely requests from Zhongce and TUTRIC for reviews of themselves and on September 28, 2009, Starbright requested a review of itself.

In accordance with section 751(a)(1) of the Tariff Act of 1930, as amended, (the Act) and 19 CFR 351.221(c)(1)(i), the Department published a notice initiating an administrative review of the countervailing duty order. *See Initiation of Antidumping and Countervailing Duty Administrative Reviews and Requests for Revocation in Part,* 74 FR 54956 (October 26, 2009).

On December 30, 2009, the Department rescinded the review with respect to the following six companies, pursuant to a timely withdrawal by GPX of its request for reviews of these companies: Aeolus Tyre Co. Ltd., Guizhou Tire Co. Ltd., Jiangsu Feichi Co., Ltd., Shandong Huitong Tyre Co., Ltd., Tianjin Wanda Tyre Co., Ltd., and Triangle Tyre Co., Ltd. *See Certain New Pneumatic Off-the-Road Tires From the People's Republic of China: Partial Rescission of Countervailing Duty Administrative Review,* 75 FR 846 (December 30, 2009). On May 6, 2010, the Department rescinded the review of Zhongce and TUTRIC, pursuant to the timely withdrawal by GPX of its request for reviews of Zhongce and TUTRIC, and Zhongce and TUTRIC's timely withdrawal of their requests for reviews of themselves. *See Certain New Pneumatic Off-the-Road Tires From the People's Republic of China: Partial Rescission of Countervailing Duty Administrative Review,* 75 FR 24884 (May 6, 2010).

The Department issued questionnaires to Starbright and the Government of the PRC (GOC) on December 7, 2009. On January 6, 2010, Starbright requested an extension of time to submit its responses to the questionnaire. In response, the Department granted an extension for responses from all parties, originally due January 13, 2010, until January 29, 2010. *See* Memorandum to the File, "Extension of Deadlines for Submission of December 7 'Initial' Questionnaire Response," (January 7, 2010).[1] On January 25, 2010, Starbright requested a second extension to submit its questionnaire response. The Department granted an extension to Starbright until February 16, 2010. *See* Memorandum to the File, "Extension of Deadlines for Submission of December 7 'Initial' Questionnaire Response" (January 27, 2010).

On February 12, 2010, the Department exercised its discretion to toll Import Administration deadlines for the duration of the closure of the Federal Government from February 5 through February 12, 2010. *See* Memorandum to the Record from Ronald Lorentzen, Deputy Assistant Secretary for Import Administration, "Tolling of Administrative Deadlines As a Result of the Government Closure During the Recent Snowstorm," (February 12, 2010). Thus, Starbright's deadline was extended by seven days. On February 24, 2010, Starbright submitted its Questionnaire Response on a timely basis. On February 23, 2010, the GOC submitted a document, purportedly in response to the Department's original questionnaire, that was over three weeks past the extended January 29, 2010 deadline for that questionnaire response. The GOC did not answer any of the specific questions in the December 7, 2009 questionnaire, but merely stated its objections to the conduct of this review. Due to the unique circumstances created by the bankruptcy proceedings of GPX in Federal court, during which a number of parties claimed they were prohibited from filing any submissions in this review, the Department offered the GOC an exceptional second opportunity to respond to the original questionnaire by May 7, 2010. *See* Letter from Barbara Tillman, "New Pneumatic Off-the-Road Tires From the People's Republic of China: Countervailing Duty Administrative Review (C–570–913)," (April 30, 2010). On May 7, 2010, the GOC submitted a document in response to the Department's April 30, 2010 letter which, again, did not answer any of the specific questions in the questionnaire.

On April 1, 2010 the Department extended until further notice all regulatory deadlines in this review occurring on or after January 28, 2010, due to the concerns of parties regarding the application of stay provisions of the U.S. bankruptcy code to matters involving GPX. *See* Memorandum to the File, "Extension of Deadlines," (April 1, 2010). On May 3, 2010, the Department issued its first supplemental questionnaire to Starbright; Starbright responded on May 25, 2010. On April 30, 2010 the Department issued a memorandum stating that the Department "believes parties' concerns have been addressed" and that the Department required submissions due from domestic parties after January 28, 2010 be submitted by May 10, 2010. *See* Memorandum to the File, "Due Date for Domestic Party Submissions," (April 30, 2010).

On May 10, 2010, Bridgestone Americas, Inc. and its subsidiary, Bridgestone Americas Tire Operations, LLC (collectively Bridgestone), a domestic interested party, submitted new subsidy allegations regarding the provision of nylon cord and carbon black for less than adequate remuneration (LTAR). Also on May 10, 2010, Titan Tire Corporation (Titan),[2] submitted an allegation that Starbright was uncreditworthy during 2006, 2007 and 2008. On July 1, 2010, the Department initiated investigations of the provision of nylon cord and carbon black for LTAR, and Starbright's creditworthiness for 2006. *See* Memorandum to Barbara E. Tillman, "Initiation Analysis of New Subsidy Allegation and Creditworthiness Allegation for Starbright," (July 1, 2010). On May 10, 2010, Bridgestone and Titan each submitted timely requests for the

[1] A public version of all memoranda referenced in this notice is on file in the Department's Central Records Unit (CRU) in Room 1117 of the main Department building.

[2] Titan is one of the petitioners in the investigation along with United Steel, Paper and Forestry, Rubber, Manufacturing, Energy Allied Industrial and Service Workers International Union, AFL–CIO–CLC.

Department to conduct a verification of the questionnaire responses submitted by Starbright and the GOC.

On June 7, 2010, the Department extended the time limit for the preliminary results of this administrative review until October 7, 2010. *See Certain New Pneumatic Off-the-Road Tires from the People's Republic of China: Extension of Time Limit for Preliminary Results of Countervailing Duty Administrative Review,* 75 FR 32159 (June 7, 2010).

On June 18, 2010, the Department issued its second supplemental questionnaire to Starbright; Starbright submitted its timely response on July 6, 2010. On July 8, 2010, the Department issued a New Subsidy Allegation Questionnaire and Uncreditworthy Allegation Questionnaire to Starbright; Starbright submitted a timely response on July 29, 2010. On July 19, 2010, the Department issued a New Subsidy Allegation Questionnaire to the GOC; on August 9, 2010, the GOC submitted a document that did not respond to any of the specific questions in the questionnaire. On August 10, 2010, the Department informed parties that it would accept new information pertaining to prices for natural and synthetic rubber, nylon cord and carbon black sold outside the PRC for the types of these inputs purchased by Starbright. *See* Memorandum to the File, "Accepting Information on Prices for Rubber Sold Outside the PRC," dated August 10, 2010. On August 19, 2010, Titan submitted information pertaining to prices for nylon cord sold outside the PRC (data had previously been submitted by both Titan and Bridgestone in a new factual information filing, submitted on the last day the record was open). On August 30, 2010, the Department issued a third supplemental questionnaire to Starbright. Starbright submitted a timely response on September 17, 2010. On September 21, 2010, the Department received pre-preliminary comments from Titan and Bridgestone arguing primarily that the Department should apply adverse facts available (AFA) in this review, continue to find countervailable the programs Starbright was found to benefit from in the original investigation, find Starbright uncreditworthy, and revise the benchmarks used in the original investigation.

Scope of the Order

The products covered by the scope of this order are new pneumatic tires designed for off-the-road (OTR) and off-highway use, subject to exceptions identified below. Certain OTR tires are generally designed, manufactured and offered for sale for use on off-road or off-highway surfaces, including but not limited to, agricultural fields, forests, construction sites, factory and warehouse interiors, airport tarmacs, ports and harbors, mines, quarries, gravel yards, and steel mills. The vehicles and equipment for which certain OTR tires are designed for use include, but are not limited to: (1) Agricultural and forestry vehicles and equipment, including agricultural tractors,[3] combine harvesters,[4] agricultural high clearance sprayers,[5] industrial tractors,[6] log-skidders,[7] agricultural implements, highway-towed implements, agricultural logging, and agricultural, industrial, skid-steers/mini-loaders; [8] (2) construction vehicles and equipment, including earthmover articulated dump products, rigid frame haul trucks,[9] front end loaders,[10] dozers,[11] lift trucks, straddle carriers,[12] graders,[13] mobile cranes,[14] compactors; and (3) industrial vehicles and equipment, including smooth floor, industrial, mining, counterbalanced lift trucks, industrial and mining vehicles other than smooth floor, skid-steers/mini-loaders, and smooth floor off-the-road counterbalanced lift trucks.[15] The foregoing list of vehicles and equipment generally have in common that they are used for hauling, towing, lifting, and/or loading a wide variety of equipment and materials in agricultural, construction and industrial settings. Such vehicles and equipment, and the descriptions contained in the footnotes are illustrative of the types of vehicles and equipment that use certain OTR tires, but are not necessarily all-inclusive. While the physical characteristics of certain OTR tires will vary depending on the specific applications and conditions for which the tires are designed (*e.g.,* tread pattern and depth), all of the tires within the scope have in common that they are designed for off-road and off-highway use. Except as discussed below, OTR tires included in the scope of the proceeding range in size (rim diameter) generally but not exclusively from 8 inches to 54 inches. The tires may be either tube-type [16] or tubeless, radial or non-radial, and intended for sale either to original equipment manufacturers or the replacement market. The subject merchandise is currently classifiable under Harmonized Tariff Schedule of the United States (HTSUS) subheadings: 4011.20.10.25, 4011.20.10.35, 4011.20.50.30, 4011.20.50.50, 4011.61.00.00, 4011.62.00.00, 4011.63.00.00, 4011.69.00.00, 4011.92.00.00, 4011.93.40.00, 4011.93.80.00, 4011.94.40.00, and 4011.94.80.00. While HTSUS subheadings are provided for convenience and customs purposes, our written description of the scope is dispositive.

Specifically excluded from the scope are new pneumatic tires designed, manufactured and offered for sale primarily for on-highway or on-road use, including passenger cars, race cars, station wagons, sport utility vehicles, minivans, mobile homes, motorcycles, bicycles, on-road or on-highway trailers,

[3] Agricultural tractors are dual-axle vehicles that typically are designed to pull farming equipment in the field and that may have front tires of a different size than the rear tires.

[4] Combine harvesters are used to harvest crops such as corn or wheat.

[5] Agricultural sprayers are used to irrigate agricultural fields.

[6] Industrial tractors are dual-axle vehicles that typically are designed to pull industrial equipment and that may have front tires of a different size than the rear tires.

[7] A log-skidder has a grappling lift arm that is used to grasp, lift and move trees that have been cut down to a truck or trailer for transport to a mill or other destination.

[8] Skid-steer loaders are four-wheel drive vehicles with the left-side drive wheels independent of the right-side drive wheels and lift arms that lie alongside the driver with the major pivot points behind the driver's shoulders. Skid-steer loaders are used in agricultural, construction and industrial settings.

[9] Haul trucks, which may be either rigid frame or articulated (*i.e.,* able to bend in the middle) are typically used in mines, quarries and construction sites to haul soil, aggregate, mined ore, or debris.

[10] Front loaders have lift arms in front of the vehicle. They can scrape material from one location to another, carry material in their buckets, or load material into a truck or trailer.

[11] A dozer is a large four-wheeled vehicle with a dozer blade that is used to push large quantities of soil, sand, rubble, *etc.,* typically around construction sites. They can also be used to perform "rough grading" in road construction.

[12] A straddle carrier is a rigid frame, engine-powered machine that is used to load and offload containers from container vessels and load them onto (or off of) tractor trailers.

[13] A grader is a vehicle with a large blade used to create a flat surface. Graders are typically used to perform "finish grading." Graders are commonly used in maintenance of unpaved roads and road construction to prepare the base course onto which asphalt or other paving material will be laid.

[14] *i.e.,* "on-site" mobile cranes designed for off-highway use.

[15] A counterbalanced lift truck is a rigid framed, engine-powered machine with lift arms that has additional weight incorporated into the back of the machine to offset or counterbalance the weight of loads that it lifts so as to prevent the vehicle from overturning. An example of a counterbalanced lift truck is a counterbalanced fork lift truck. Counterbalanced lift trucks may be designed for use on smooth floor surfaces, such as a factory or warehouse, or other surfaces, such as construction sites, mines, *etc.*

[16] While tube-type tires are subject to the scope of this proceeding, tubes and flaps are not subject merchandise and therefore are not covered by the scope of this proceeding, regardless of the manner in which they are sold (*e.g.* sold with or separately from subject merchandise).

light trucks, and trucks and buses. Such tires generally have in common that the symbol "DOT" must appear on the sidewall, certifying that the tire conforms to applicable motor vehicle safety standards. Such excluded tires may also have the following designations that are used by the Tire and Rim Association:

Prefix letter designations:

- P—Identifies a tire intended primarily for service on passenger cars;
- LT—Identifies a tire intended primarily for service on light trucks; and,
- ST—Identifies a special tire for trailers in highway service.

Suffix letter designations:

- TR—Identifies a tire for service on trucks, buses, and other vehicles with rims having specified rim diameter of nominal plus 0.156" or plus 0.250";
- MH—Identifies tires for Mobile Homes;
- HC—Identifies a heavy duty tire designated for use on "HC" 15" tapered rims used on trucks, buses, and other vehicles. This suffix is intended to differentiate among tires for light trucks, and other vehicles or other services, which use a similar designation.
- Example: 8R17.5 LT, 8R17.5 HC;
- LT—Identifies light truck tires for service on trucks, buses, trailers, and multipurpose passenger vehicles used in nominal highway service; and
- MC—Identifies tires and rims for motorcycles.

The following types of tires are also excluded from the scope: Pneumatic tires that are not new, including recycled or retreaded tires and used tires; non-pneumatic tires, including solid rubber tires; tires of a kind designed for use on aircraft, all-terrain vehicles, and vehicles for turf, lawn and garden, golf and trailer applications. Also excluded from the scope are radial and bias tires of a kind designed for use in mining and construction vehicles and equipment that have a rim diameter equal to or exceeding 39 inches. Such tires may be distinguished from other tires of similar size by the number of plies that the construction and mining tires contain (minimum of 16) and the weight of such tires (minimum 1500 pounds).

Period of Review

The period for which we are measuring subsidies, *i.e.,* the period of review (POR), is December 17, 2007 through December 31, 2008. *See* 351.213(e)(2)(ii). Since there are only 15 days of 2007 entries covered in the review, the Department has decided to calculate a single rate for subsidies received in calendar year 2008 and apply this rate to entries made from December 17, 2007 through December 31, 2007 for assessment purposes.

Subsidies Valuation Information

Allocation Period

In the investigation, consistent with 19 CFR 351.524(d)(2), we used an average useful life (AUL) of assets as the allocation period for non-recurring subsidies provided on or after December 11, 2001, the date the Department determined subsidies in the PRC became identifiable and measurable (*i.e.*, the "cutoff" date). The AUL applicable to the OTR tires industry is 14 years according to the U.S. Internal Revenue Service's 1977 Class Life Asset Depreciation Range System. No party in this proceeding has disputed this allocation period. Thus, we continue to use a 14-year AUL for these preliminary results of review.

Sales Denominator

After considering the basis for Starbright's receipt of a benefit under each program at issue, we have determined to use its total sales value as the denominator in our calculations for these preliminary results of review, pursuant to 19 CFR 351.525(b)(3), except for VAT and Import Duty Exemptions for Imported Materials discussed below. For that program, we have determined that Starbright benefitted by its status as an exporter, and thus we have used total export sales as the denominator in calculating the countervailable subsidy rate for this program.

Creditworthiness

Titan alleged that Starbright was uncreditworthy from 2006 through 2008 due to its poor financial ratios and lack of long-term commercial loans. The Department found the allegation sufficient and indicated an uncreditworthy condition for the years 2006 through 2008. Because we have preliminarily determined that the only non-recurring subsidies were received in 2006 we have limited our analysis to that year. According to 19 CFR 351.505(a)(4)(i), a firm is considered uncreditworthy if it could not have obtained long-term loans from conventional commercial sources. Given that Starbright did not have long-term commercial loans in 2006 from conventional commercial sources, the next step in the Department's analysis, pursuant to 19 CFR 351.505(a)(4)(i)(B)–(C), would typically be to examine the past and present financial health of the firm and its recent past and present ability to meet its costs and financial obligations with its cash flow. In 2006, Starbright had just been created from the assets of Hebei Tire, a company that was laden with unpaid debts, as indicated by the debt forgiveness decisions in the investigation. *See Certain New Pneumatic Off-the-Road Tires From the People's Republic of China: Final Affirmative Countervailing Duty Determination and Final Negative Determination of Critical Circumstances*, 73 FR 40480 (July 15, 2008), Issues and Decision Memorandum (OTR Final IDM) at "Analysis of Programs." In this first year of operations under its new form, the company had high startup costs, a low sales volume, and liquid assets on hand to cover a relatively small fraction of its immediate obligations; facts that served as the basis for the creditworthiness allegation.

However, despite the poor state of its past and present finances in 2006, its acquisition in that same year created the possibility of a much healthier future. Such a prospective view is relevant, given 19 CFR 351.505(a)(4)(i)(D), which states that we may examine "evidence of the firm's future financial position, such as market studies, country and industry economic forecasts, and project and loan appraisals. * * * " There are no such evaluations on the record regarding Starbright *per se.* However, in preparing to acquire Hebei Tire's productive assets in 2006, Starbright's parent, GPX, commissioned legal and financial due diligence analyses of those assets. Among these were evaluations from commercial lenders outside China, which imply profitable employment of those assets after acquisition by GPX. The favorable projections attest not only to positive prospects for GPX overall, but, by extension, for the new business operation formed solely by GPX to employ those assets, namely Starbright. *See* Starbright's April 5, 2008 questionnaire response in the investigation, at Exhibit V–CVD–1, placed on the record of this review by the Department on May 7, 2010. The content of these evaluations is business proprietary and the details cannot be discussed within this public document. They are discussed more fully in the Memorandum to the File, "Preliminary Calculation Memorandum for Hebei Starbright Tire Co., Ltd.," (October 7, 2010) (Preliminary Calculation Memorandum) in which we discuss in greater detail the statements we find to be indicative of Starbright's positive prospects in 2006. Finally, our regulations refer not just to evidence of the firm's future financial position, but to "market studies, country and industry

economic forecasts." In this regard, the propriety record indicates strong demand, insufficient capacity, and increasing price levels in its description of the global OTR tire industry. *Id.*

Thus, Starbright's purchase by GPX creates the unique situation in which a company performing poorly historically and in the recent past, is transformed into a new producer with a radically different prospective financial outlook. Such is the result of the CIO resulting from the GPX takeover, which, according to the details of the BPI data cited above, involved plans for a significant retooling of GPX's facilities into a modern, first class producer consistent with GPX's global standards.

On these bases, we find that Starbright was not uncreditworthy for the year 2006.

Benchmarks and Discount Rates

As discussed below, we are countervailing short-term lending to Starbright in the form of a loan from a State-owned commercial bank. To calculate the benchmark interest rate used in determining the benefit provided by this program, we used a regression-based methodology identical to that used in the investigation in all respects, except that the data used for this review is contemporaneous with the POR. The resulting short-term lending rate for the POR is identical to that calculated for several recent PRC investigations with periods of investigations equal to calendar year 2008. *See, e.g., Certain Coated Paper Suitable for High-Quality Print Graphics Using Sheet-Fed Presses From the People's Republic of China: Final Affirmative Countervailing Duty Determination,* 75 FR 59212 (September 27, 2010).

The only non-recurring programs countervailed in these preliminary results are the same non-recurring programs countervailed in the investigation. Therefore, in determining the benefits for those programs allocable to this POR, we took the discount rate calculated in the investigation and modified it only to reflect agency-wide changes in the calculation methodology developed in an investigation concluded subsequent to the OTR Tires investigation, *Citric Acid and Certain Citrate Salts From the People's Republic of China: Final Affirmative Countervailing Duty Determination,* 74 FR 16836 (April 13, 2009) (*Citric Acid from the PRC*). Specifically, in *Citric Acid from the PRC* we determined that the spread used to convert short-term rates to long-term rates should be based on the spread between a 2-year BB bond and an "N"-year BB bond, where N is the AUL, or as close to the AUL in years as can be obtained in available bond rates, and that this spread should be applied as an addition to the short-term rate, not as a multiplicative factor. *See Citric Acid from the PRC,* "Issues and Decision Memorandum" at Comments 13 and 14. In *Citric Acid from the PRC* we determined these changes were not merely preferable to the older method, but were necessary to correct errors in the prior method. For the remainder of the benefit calculation for these programs, we relied on the information from the investigation without changes.

Application of Facts Available, and Use of Adverse Inferences

A. Standards

Sections 776(a)(1) and (2) of the Act provide that the Department shall apply "facts otherwise available" if necessary information is not on the record or an interested party or any other person: (A) Withholds information that has been requested; (B) fails to provide information within the deadlines established, or in the form and manner requested by the Department, subject to subsections (c)(1) and (e) of section 782 of the Act; (C) significantly impedes a proceeding; or (D) provides information that cannot be verified as provided by section 782(i) of the Act.

Section 776(b) of the Act further provides that the Department may use an adverse inference in applying the facts otherwise available—*i.e.*, adverse facts available (AFA)—when a party has failed to cooperate by not acting to the best of its ability in complying with a request for information. As explained in more detail in "Programs to Which AFA is Being Applied" below, we find that the GOC has not acted to the best of its ability to comply with the Department's repeated requests for information necessary to analyze fully certain of the subsidy programs under review.

B. Programs to Which AFA Is Being Applied

Provision of Rubber, Carbon Black, and Nylon Cord for LTAR

The Department is investigating the provision of rubber, carbon black and nylon cord for LTAR by the GOC. We requested information from the GOC about the PRC's rubber, carbon black and nylon cord industries in general as well as the specific companies that produced the rubber, carbon black and nylon cord purchased by Starbright. In both respects, the GOC has withheld the requested information, in effect refusing to provide it. In response to the Department's first questionnaire the GOC submitted a document that was argumentative and which merely stated that "it makes little sense to submit detailed answers to the questions set forth in the Commerce Department Questionnaire at this time." When given a second, extraordinary opportunity to respond to the Department's initial questionnaire, the GOC again decided not to answer any questions and only referred to its previous arguments for not responding. In response to the Department's New Subsidy Allegation questionnaire, rather than answer any specific questions, the GOC merely stated that it "strongly opposes the Department's presumption that government ownership is a dispositive factor in determining the 'authority' status of entities, as well as the enormous documentary burdens imposed by the Department in examining the status of various input suppliers and the input industry in question as a whole," and requested that the Department terminate the proceedings. These submissions by the GOC amount to little more than the venting of grievances against the Department and cannot reasonably be considered proper questionnaire responses. They are, in fact, outright refusals even to attempt to respond to the Department's requests for information.

Based on the above, we preliminarily find that necessary information is not available on the record, that the GOC has withheld information requested by the Department, and, thus, that the Department must rely on "facts available" in making its preliminary determination. *See* sections 776(a)(1) and (a)(2)(A) of the Act. Moreover, we preliminarily find that the GOC has failed to cooperate by not acting to the best of its ability in complying with our request for information. Consequently, an adverse inference is warranted in the application of facts available. *See* section 776(b) of the Act.

Regarding the GOC's failure to provide certain requested ownership and control information about the producers of inputs purchased by the respondent, we are assuming adversely that all of the producers of rubber, carbon black and nylon cord purchased by Starbright are "authorities" within the meaning of section 771(5)(B) of the Act. While Starbright has given us some information concerning the ownership of three of the producers, given the GOC's lack of a response, we have no information concerning government control of any of the producers, beyond the immediate owners of these three producers. With respect to the GOC's failure to provide requested information about the production and consumption

of rubber, carbon black and nylon cord generally, we are assuming adversely that the GOC's dominance of the market in the PRC for these inputs results in significant distortion of domestic prices and, hence, that the use of external benchmarks is warranted. For details on the calculation of the subsidy rate for Starbright, *see* below under the "Analysis of Programs" section.

VAT and Import Duty Exemptions on Imported Material

In the investigation, we determined that certain respondents "used imported rubber to produce tires sold in the PRC and, therefore, such imports would not have been entitled to VAT and import duty exemptions." *See* OTR Final IDM at 12. We then concluded: "Therefore, if a CVD order is issued and an administrative review requested, the Department intends to examine the GOC's import duty and VAT exemption programs." *Id.* Consequently, we included several questions in our initial questionnaire to the GOC concerning the operation and administration of the program by which companies are exempt from paying VAT and import duties on imports used in the production of exported products. Specifically, the questions were designed to determine whether a system was in place that ensures all exempted materials are consumed in exported products, based on the actual experience of companies using the program. Given that the GOC did not respond to these questions, we are unable to evaluate whether the GOC's system meets the criteria for non-countervailability set forth in 19 CFR 351.519(a). As such the decision by the GOC not to respond to any of our questions leaves the Department with no choice but to find the entire amount of the exemptions "extends to inputs that are not consumed in the production of the exported product, making normal allowances for waste." *See* 19 CFR 351.519(a). For details on the calculation of the subsidy rate for the respondent, *see* below under the "Analysis of Programs" section.

C. Corroboration of AFA

Section 776(c) of the Act provides that, when the Department relies on secondary information rather than on information obtained in the course of an investigation or review, it shall, to the extent practicable, corroborate that information from independent sources that are reasonably at its disposal. Secondary information is defined as "information derived from the petition that gave rise to the investigation or review, the final determination concerning the subject merchandise, or any previous review under section 751 of the Act concerning the subject merchandise."

The facts available decisions described above do not rely on secondary information. While Bridgestone and Titan have submitted information regarding the status of rubber producers and suppliers relevant to this review, our determination that these producers are public entities is based on the unwillingness of the GOC to provide necessary information on the status of these entities. Likewise, our determinations that the domestic rubber market in the PRC is distorted through government intervention, and that the PRC's bonding system does not ensure that imports exempted from duties are solely consumed in exported products, are based on the GOC's refusal to address either of these issues, or to provide any information that would lead us to a different conclusion. The corroboration requirement of section 776(c) of the Act is therefore not applicable to the use of facts available in this review.

Analysis of Programs

A. Programs Previously Determined To Be Countervailable

1. Government Debt Forgiveness and the Provision of Land to Starbright Pursuant to Its Change in Ownership

On July 7, 2008, the Department issued a change in ownership memorandum, analyzing Starbright's 2006 purchase of the assets of Hebei Tire. *See* Memorandum to the File, "Countervailing Duty Investigation of Certain New Pneumatic Off-the-Road Tires (OTR Tires) From the People's Republic of China; Analysis of Change in Ownership, Final Determination" (July 7, 2008) (CIO Memorandum) determining that debt and land provided to Hebei Tire benefitted Starbright. Applying the Department's CIO methodology we concluded that the 2006 transaction did not extinguish any non-recurring subsidies provided to Hebei Tire prior to the transaction, including debt forgiveness, because Starbright had not demonstrated the transaction was at arm's length and for fair market value. We also determined that Starbright had been the direct recipient of land use rights provided at less than adequate remuneration. No new information or evidence of changed circumstances has been submitted in this review that leads us to reconsider these determinations. Therefore for the preliminary results of this review, we are maintaining our determination that the 2006 transaction did not extinguish prior non-recurring subsidies to Hebei Tire.

a. Debt Forgiveness From State-Owned Banks to Hebei Tire

Consistent with our prior determination, the Department continues to find that the forgiveness of certain loans from State-owned banks to Hebei Tire is countervailable. This debt forgiveness constitutes a financial contribution under section 771(5)(D)(i) of the Act, and is specific under section 771(5A)(D)(iii)(I) of the Act, as it was limited to a specific enterprise (*i.e.*, to Hebei Tire only). A benefit exists equal to the amount of principal and accrued interest forgiven within the meaning of 19 CFR 351.508(a). In determining this benefit, we have taken the amount of the debt forgiveness from the investigation calculations placed on the record on May 7, 2010. We then reallocated this amount using the revised discount rate methodology discussed above in the "Benchmarks and Discount Rate" section, using an allocation table beginning in 2006, just as in the investigation. We then divided the benefit amount allocated to the POR by Starbright's total sales during the POR to calculate a countervailable subsidy rate of 1.52 percent *ad valorem.*

b. Debt Forgiveness of Hebei Tire's Loan Guarantee Obligations

In the investigation, the Department found that obligations arising from the provision of loan guarantees represented a form of debt forgiveness to Hebei Tire and that this debt forgiveness was countervailable. In its initial questionnaire response, Starbright submitted new information regarding this program. Specifically, Starbright claimed that under Article 219 of the Civil Procedures Law of the PRC, Starbright's debt guarantees were extinguished. Starbright further argues that that the debt was extinguished through the bankruptcy of the primary debtor. Given that the record indicates clearly that at least two of the obligations survived the bankruptcy proceeding,[17] and were not, in fact, extinguished by the Civil Procedures Law, and Starbright's failure to provide direct evidence that any of the debt guarantees were extinguished, the Department continues to find this program countervailable. This debt forgiveness constitutes a financial contribution under section 771(5)(D)(i) of the Act, and is specific under section 771(5A)(D)(iii)(I) of the Act, as it was limited to specific enterprises (*i.e.*, Hebei Tire, co-guarantors, primary

[17] *See CIO Memorandum* at 4.

borrower). A benefit exists equal to the amount of principal and accrued interest forgiven under 19 CFR 351.508(a). In determining this benefit, we have taken the amount of the debt forgiveness from the investigation calculations placed on the record on May 7, 2010. We then reallocated this amount using the revised discount rate methodology discussed above in the "Benchmarks and Discount Rate" section, using an allocation table beginning in 2006, just as in the investigation. We divided the benefit amount allocated to the POR by Starbright's total sales during the POR to calculate a countervailable subsidy rate of 5.39 percent *ad valorem.*

c. Government Provision of Land to SOEs for Less Than Adequate Remuneration—Starbright's Granted Land Use Rights

Consistent with our prior determination, the Department continues to find that Starbright's granted land use rights are countervailable. We previously determined that this subsidy was specific in accordance with section 771(5A)(D)(i) of the Act, because Starbright obtained its granted land use rights as part of a government policy of SOE reform. We also found a financial contribution under section 771(5)(D)(iii) of the Act and a benefit under section 771(5)(E)(iv) of the Act, because we determined the granted land use rights were a provision of a good or service for LTAR. In determining this benefit, we have taken the amount of the benefit from the granted land use rights from the investigation calculations placed on the record on May 7, 2010. We then reallocated this amount using the revised discount rate discussed above, using an allocation table beginning in 2006, just as in the investigation. We divided the benefit amount allocated to the POR by Starbright's total sales during the POR to calculate a countervailable subsidy rate of 0.43 percent *ad valorem.*

d. Government Provision of Land to SOEs for Less Than Adequate Remuneration—Starbright's Land Leased From Local Villages

Consistent with our prior determination, the Department continues to find that the land Starbright leases from local villages is countervailable.[18] In the investigation, we found that the local village committees are authorities within the meaning of section 771(5)(B) of the Act. Accordingly, we found a financial contribution under section 771(5)(D)(iii) of the Act because the provision of land is a provision of a good or service. We also found that the provision of leased land is specific in accordance with section 771(5A)(D)(i) of the Act because Starbright assumed the leases for these village tracts as part of its asset purchase of Hebei Tire, which was part of a government program to reform SOEs. With respect to benefit, we determined that a benefit exists under 19 CFR 351.511(a) to the extent that the leased land was provided at LTAR. No information was placed on the record of this review that would cause us to change these findings from the investigation. In determining the amount of the benefit, we have updated the benchmark from the investigation, using 2008 quarterly industrial rental values in Thailand. This is the same source of information used in the investigation, but updated with values contemporaneous with the POR. *See* Preliminary Calculation Memorandum.

We then compared the rental payments made by Starbright during the POR with the amount of rent Starbright would have at the benchmark rate; we divided the benefit amount by Starbright's total sales during the POR to calculate a countervailable subsidy rate of 0.76 percent *ad valorem.*

2. Government Policy Lending

In the investigation, we found that policy lending was *de jure* specific within the meaning of section 771(5A)(D)(i) of the Act, constitutes financial contributions by "authorities" (*i.e.,* State-owned commercial banks) within the meaning of sections 771(5)(B) and 771(5)(D)(i) of the Act, and provides benefits within the meaning of section 771(5)(E)(ii) of the Act equal to the difference between what the recipients paid on loans from government-owned banks and the amount they would have paid on comparable commercial loans. In our initial questionnaire to the GOC, we noted our intention to rely on our findings in the investigation regarding the countervailability of this program. We noted: "However, if there were any changes to the operation of the program since it was last reviewed, please answer all relevant appendices." As noted above, the GOC did not respond to this questionnaire and thus no information has been placed on the record of this review that would cause us to change our findings from the investigation. Therefore we are continuing to find government policy lending countervailable.

In its response to the Department's initial questionnaire, Starbright provided a loan spreadsheet indicating it had received a loan under this program during the POR from a State-owned commercial bank. Using a benchmark interest rate, we compared Starbright's actual interest payments during the POR to the State-owned commercial bank to the payments it would have been required to make on "comparable commercial loans." In doing so, we made adjustments for inflation, following the standard PRC loan methodology used in the investigation. In calculating the benchmark for "comparable commercial loans," we relied on the same regression analysis used in the investigation for calculating PRC lending rates absent the distortive effects of government interference in the banking sector, revised only to reflect data contemporaneous with the POR. We divided the total benefit amount by Starbright's total sales during the POR, and determined a countervailable subsidy rate of 0.20 percent *ad valorem.*

3. Government Provision of Rubber for Less Than Adequate Remuneration

We preliminarily find the government provision of natural and synthetic rubber inputs to Starbright to be countervailable. In the investigation we found the provision of rubber to be specific within the meaning of section 771(5A)(D)(iii)(I) of the Act, because the rubber is provided to a limited number of industries. *See* OTR Final IDM at 9–12. As discussed above, due to the GOC's failure to respond to our initial questionnaire, the Department is unable to determine the extent of government control over the producers of rubber purchased by Starbright. Also as noted above, we find that an adverse inference is warranted, and, as such, we conclude that all domestic producers from whom Starbright purchased natural and synthetic rubber are "public entities" and therefore "authorities" within the meaning of section 771(5)(B) of the Act. Without GOC participation, the Department is unable to determine the extent of GOC ownership of, and involvement in, the domestic market for natural and synthetic rubber, and we are unable to determine the extent of domestic price distortion caused through GOC involvement in the production of rubber. Therefore, we are also determining as AFA that a world benchmark is warranted pursuant to 19 CFR 351.511(a)(2)(ii). Using average purchase prices by month and type of rubber, we calculated benefit amounts equal to the differences between what Starbright paid for the domestically

[18] The GOC was asked to provide information regarding changes to this program in the initial questionnaire. Starbright provided rent payment information in response to the May 25, 2010 supplemental questionnaire.

sourced rubber and these benchmarks, multiplied by the relevant quantities at LTAR. We calculated separate benchmarks for natural and synthetic rubber on a quarterly basis. We added amounts for ocean freight, inland freight, and VAT and import duties, calculated in accordance with the standard PRC VAT and duty rates for these products, before comparing these benchmarks to the delivered prices paid by Starbright. We then divided the total amount of these benefits by Starbright's total sales during the POR and preliminarily determined a countervailable subsidy rate of 1.44 percent *ad valorem.*

B. New Subsidy Programs Initiated in the Review

Provision of Carbon Black and Nylon Cord for LTAR

Bridgestone alleged that the GOC provides producers of nylon cord and carbon black with numerous subsidies and preferences, causing distortion in the markets for those two products, and that the GOC otherwise exerts considerable control on the market for carbon black and nylon cord through SOEs. Bridgestone further alleged that the provision of carbon black and nylon cord by SOEs constitutes a financial contribution, that Starbright receives a benefit to the extent that it purchases carbon black and nylon cord from SOEs at LTAR, and that this subsidy is specific because the tire industry is the predominant user of these inputs in the PRC. As discussed above, under the "Application of Facts Available, and Use of Adverse Inferences" section, the GOC did not respond to the Department's questionnaire regarding these programs. Accordingly, we are applying AFA for parts of our decision with respect to these programs. Based on AFA, we determine that the producers of the nylon cord and carbon black purchased by Starbright are owned or otherwise controlled by the GOC and therefore are "public entities" and "authorities" within the meaning of section 771(5)(B) of the Act. Moreover, without GOC participation, the Department is unable to determine the extent of GOC ownership of, and involvement in, the domestic market for nylon cord and carbon black, and we are unable to determine the extent of domestic price distortion caused through GOC involvement in the production of these two products. Therefore, we are also determining as AFA that a world benchmark is warranted pursuant to 19 CFR 351.511(a)(2)(ii). Finally, we find that the provision of nylon cord and carbon black is specific within the meaning of section 771(5A)(D)(iii)(II) of the Act because, according to information included in the allegations, uncontested by respondents, the tire industry is the predominant user of both those products.

In determining the benefit, we have relied on benchmarks calculated from the Global Trade Atlas (GTA) for both products. While Bridgestone and Titan provided possible benchmark data for nylon cord reported by Chemical Markets Associates, Inc., we are unable to use this data because it covers only one month of the POR, or covers months not in the POR. Using the GTA data, we calculated monthly average unit value benchmarks for each product based on exports from all countries other than China. We added amounts for ocean freight, inland freight, and VAT and import duties, calculated in accordance with the standard PRC VAT and duty rates for these products in order to derive delivered prices. Using average purchase prices by month, we calculated benefit amounts equal to the differences between what Starbright paid for the domestically sourced nylon cord and carbon black and these benchmarks, multiplied by the relevant quantities at LTAR. We then summed the benefits calculated in this manner to derive a total benefit amount under each program. After dividing the total benefit amounts by total sales, we determined countervailable subsidy rates of 2.32 percent and 9.10 percent *ad valorem* for nylon cord and carbon black, respectively.

C. VAT and Import Duty Exemptions on Imported Material

As noted above, because the GOC did not respond to our questionnaire, which contained several questions aimed at evaluating whether VAT and import duty exemptions received by Starbright on materials imported under bond were countervailable, we have determined it is appropriate to find that all such exemptions are countervailable under 19 CFR 351.519(a). The program provides a financial contribution pursuant to section 771(5)(D)(ii) of the Act in the form of revenue foregone by the GOC, and is specific as an export subsidy pursuant to section 771(5A)(B) of the Act, as only exporters can qualify. To calculate the amount of the benefit, we calculated the total amount of VAT and duties that would otherwise have been paid on the exempted material, using the VAT and duty rates for the different types of material reported by Starbright. We then divided this total benefit amount by total export sales in order to determine a countervailable subsidy rate of 9.71 percent *ad valorem.*

D. Programs Determined To Be Not Used

1. *Loan Forgiveness For SOEs.*
2. *Foreign Currency Retention Scheme.*
3. *Preferential Tax Policies For Enterprises With Foreign Investment (Two Free, Three Half Income Tax Program).*
4. *Preferential Tax Policies For Export-Oriented Foreign Invested Enterprises (FIEs).*
5. *Corporate Income Tax Refund Program For Reinvestment Of FIE Profits In Export-Oriented Enterprises.*
6. *Tax Benefits For FIEs In Encouraged Industries That Purchase Domestic Origin Machinery.*
7. *VAT Rebate For FIE Purchases Of Domestically Produced Equipment.*
8. *Funds For Outward Expansion Of Industries In Guangdong Province.*
9. *Export Interest Subsidy Funds For Enterprises Located In Guangdong And Zhejiang Provinces.*
10. *Grants To Loss-Making SOEs.*
11. *Exemption For SOEs From Distributing Dividends To The State.*
12. *Preferential Tax Policies For Advanced Technology FIEs.*
13. *Preferential Tax Policies For Knowledge Or Technology Intensive FIEs.*
14. *Preferential Tax Policies For High Or New Technology FIEs.*
15. *Preferential Tax Policies For Research And Development By FIEs.*
16. *Provincial Support In Antidumping Proceedings.*
17. *Grants To The Tire Industry For Electricity.*
18. *Discounted Loans For Export-Oriented Enterprises.*
19. *Stamp Tax Exemption on Share Transfers under the Non-Tradeable Share Reform (NTSR) Program.*
20. *State Key Technology Renovation Project Fund.*
21. *Special Fund for Environmental Protection of 2004.*
22. *Provision of Land for LTAR to FIEs.*[19]
23. *Tax Subsidies to FIEs in Specially Designated Geographic Areas.*
24. *Local Income Tax Exemption and Reduction Program for "Productive" FIEs.*
25. *Tax and Tariff Exemption for FIEs and Certain Domestic Enterprises Using Imported Equipment in Encouraged Industries.*
26. *Provincial/Municipal Technology Programs.*

[19] The Department is finding the provision of land for LTAR countervailable, *see* section "Programs Previously Determined to be countervailable," however the Department does not find provision of Land for LTAR countervailable as a result of a company's FIE status.

27. *Municipal Major Technical Innovation Program.*

Preliminary Results of Administrative Review

In accordance with 19 CFR 351.221(b)(4)(i), we have calculated an individual subsidy rate for Starbright for the POR. We preliminarily determine the total countervailable subsidy to be 30.87 percent *ad valorem.*

Assessment Rates/Cash Deposits

If these preliminary results are adopted in our final results of this review, 15 days after publication of the final results of this review the Department will instruct CBP to liquidate shipments of OTR Tires by Starbright entered or withdrawn from warehouse, for consumption from December 17, 2007 through December 31, 2008, at 30.87 percent *ad valorem* of the entered value. In keeping with the Agreement on Subsidies and Countervailing Measures of the World Trade Organization, shipments entered, or withdrawn from warehouse, for consumption on or after April 15, 2008, and on or before September 4, 2008, the period between the expiration of "provisional measures" and the publication of the final affirmative injury determination of the U.S. International Trade Commission, will be liquidated without regard to countervailing duties.

The Department will also instruct CBP to collect cash deposits of estimated countervailing duties at the rate of 30.87 percent *ad valorem* of the entered value on shipments of the subject merchandise produced by Starbright, entered, or withdrawn from warehouse, for consumption on or after the date of publication of the final results of this review. We will instruct CBP to continue to collect cash deposits for non-reviewed companies at the applicable company-specific or all-others rate established in the investigation.

Producer/exporter	Net subsidy rate (percent)
Hebei Starbright Tire Co., Ltd.	30.87

Disclosure and Public Comment

We will disclose the calculations used in our analysis to parties to this segment of the proceeding within five days of the publication of this notice. *See* 19 CFR 351.224(b). Pursuant to 19 CFR 351.309, interested parties may submit written comments in response to these preliminary results. Unless the time period is extended by the Department, case briefs are to be submitted within 30 days of the date of publication of this notice in the **Federal Register**. *See* 19 CFR 351.309(c). Rebuttal briefs, limited to issues raised in case briefs, may be filed not later than five days after the date of the filing of case briefs. Parties who submit briefs in this proceeding should provide a summary of the arguments not to exceed five pages and a table of statutes, regulations, and cases cited. Copies of case briefs and rebuttal briefs must be served on interested parties in accordance with 19 CFR 351.303(f).

Interested parties may request a hearing within 30 days after the date of publication of this notice. Unless otherwise specified, the hearing, if requested, will be held two days after the scheduled date for submission of rebuttal briefs. The Department will publish a notice of the final results of this administrative review within 120 days from the publication of these preliminary results.

We are issuing and publishing these results in accordance with sections 751(a)(1) and 777(i)(1) of the Act.

Dated: October 7, 2010.

Ronald K. Lorentzen,

Deputy Assistant Secretary for Import Administration.

[FR Doc. 2010–26283 Filed 10–18–10; 8:45 am]

BILLING CODE 3510–DS–P

DEPARTMENT OF COMMERCE

Foreign-Trade Zones Board

[Order No. 1712]

Reorganization/Expansion of Foreign-Trade Zone 196 Under Alternative Site Framework Fort Worth, TX

Pursuant to its authority under the Foreign-Trade Zones Act of June 18, 1934, as amended (19 U.S.C. 81a–81u), the Foreign-Trade Zones Board (the Board) adopts the following Order:

Whereas, the Board adopted the alternative site framework (ASF) in December 2008 (74 FR 1170, 01/12/09; correction 74 FR 3987, 01/22/09) as an option for the establishment or reorganization of general-purpose zones;

Whereas, the Alliance Corridor, Inc., grantee of Foreign-Trade Zone 196, submitted an application to the Board (FTZ Docket 18–2010, filed 3/16/2010) for authority to reorganize under the ASF with a service area that includes the Alliance Corridor area of Denton and Tarrant Counties, Texas, adjacent to the Alliance Customs and Border Protection user fee airport, FTZ 196's existing Sites 1–4 would be categorized as magnet sites and the grantee proposes an initial usage-driven site (Site 5);

Whereas, notice inviting public comment was given in the **Federal Register** (75 FR 14127–14128, 3/24/2010) and the application has been processed pursuant to the FTZ Act and the Board's regulations; and,

Whereas, the Board adopts the findings and recommendations of the examiner's report, and finds that the requirements of the FTZ Act and Board's regulations are satisfied, and that the proposal is in the public interest;

Now, therefore, the Board hereby orders:

The application to reorganize FTZ 196 under the alternative site framework is approved, subject to the FTZ Act and the Board's regulations, including Section 400.28, to the Board's standard 2,000-acre activation limit for the overall general-purpose zone project, to a five-year ASF sunset provision for magnet sites that would terminate authority for Sites 2, 3 and 4 if not activated by October 31, 2015, and to a three-year ASF sunset provision for usage-driven sites that would terminate authority for Site 5 if no foreign-status merchandise is admitted for a *bona fide* customs purpose by October 31, 2013.

Signed at Washington, DC, October 7, 2010.

Ronald K. Lorentzen,

Deputy Assistant Secretary for Import Administration, Alternate Chairman, Foreign-Trade Zones Board.

[FR Doc. 2010–26275 Filed 10–18–10; 8:45 am]

BILLING CODE P

DEPARTMENT OF COMMERCE

National Oceanic and Atmospheric Administration

RIN 0648–XZ14

Takes of Marine Mammals Incidental to Specified Activities; Navy Training Conducted at the Silver Strand Training Complex, San Diego Bay

AGENCY: National Marine Fisheries Service (NMFS), National Oceanic and Atmospheric Administration (NOAA), Commerce.

ACTION: Notice; proposed incidental harassment authorization; request for comments.

SUMMARY: NMFS has received an application from the U.S. Navy (Navy) for an Incidental Harassment Authorization (IHA) to take marine mammals, by harassment, incidental to conducting training exercises at the Silver Strand Training Complex (SSTC)

in the vicinity of San Diego Bay, California. Pursuant to the Marine Mammal Protection Act (MMPA), NMFS is requesting comments on its proposal to issue an IHA to the Navy to incidentally harass, by Level B Harassment only, four species of marine mammals during the specified activity.

DATES: Comments and information must be received no later than November 18, 2010.

ADDRESSES: Comments on the application should be addressed to Michael Payne, Chief, Permits, Conservation and Education Division, Office of Protected Resources, National Marine Fisheries Service, 1315 East-West Highway, Silver Spring, MD 20910–3225. The mailbox address for providing e-mail comments is *0648-XZ14@noaa.gov.* NMFS is not responsible for e-mail comments sent to addresses other than the one provided here. Comments sent via e-mail, including all attachments, must not exceed a 10-megabyte file size.

Instructions: All comments received are a part of the public record and will generally be posted to *http://www.nmfs.noaa.gov/pr/permits/incidental.htm* without change. All Personal Identifying Information (for example, name, address, *etc.*) voluntarily submitted by the commenter may be publicly accessible. Do not submit Confidential Business Information or otherwise sensitive or protected information.

A copy of the application containing a list of the references used in this document may be obtained by writing to the address specified above, telephoning the contact listed below (*see* **FOR FURTHER INFORMATION CONTACT**), or visiting the Internet at: *http://www.nmfs.noaa.gov/pr/permits/incidental.htm.* Documents cited in this notice may also be viewed, by appointment, during regular business hours, at the aforementioned address.

FOR FURTHER INFORMATION CONTACT: Shane Guan, Office of Protected Resources, NMFS, (301) 713–2289, ext 137.

SUPPLEMENTARY INFORMATION:

Background

Sections 101(a)(5)(A) and (D) of the MMPA (16 U.S.C. 1361 *et seq.*) direct the Secretary of Commerce (Secretary) to allow, upon request, the incidental, but not intentional taking of small numbers of marine mammals by U.S. citizens who engage in a specified activity (other than commercial fishing) if certain findings are made and regulations are issued or, if the taking is limited to harassment, notice of a proposed authorization is provided to the public for review.

Authorization for incidental takings shall be granted if NMFS finds that the taking will have a negligible impact on the species or stock(s), will not have an unmitigable adverse impact on the availability of the species or stock(s) for subsistence uses (where relevant), and if the permissible methods of taking and requirements pertaining to the mitigation, monitoring and reporting of such taking are set forth. NMFS has defined "negligible impact" in 50 CFR 216.103 as: " * * * an impact resulting from the specified activity that cannot be reasonably expected to, and is not reasonably likely to, adversely affect the species or stock through effects on annual rates of recruitment or survival."

The National Defense Authorization Act of 2004 (NDAA) (Pub. L. 108–136) removed the "small numbers" and "specified geographical region" limitations and amended the definition of "harassment" as it applies to a "military readiness activity" to read as follows (Section 3(18)(B) of the MMPA):

(i) Any act that injures or has the significant potential to injure a marine mammal or marine mammal stock in the wild [Level A Harassment]; or

(ii) Any act that disturbs or is likely to disturb a marine mammal or marine mammal stock in the wild by causing disruption of natural behavioral patterns, including, but not limited to, migration, surfacing, nursing, breeding, feeding, or sheltering, to a point where such behavioral patterns are abandoned or significantly altered [Level B Harassment].

Section 101(a)(5)(D) of the MMPA established an expedited process by which citizens of the United States can apply for an authorization to incidentally take small numbers of marine mammals by harassment. Section 101(a)(5)(D) establishes a 45-day time limit for NMFS review of an application followed by a 30-day public notice and comment period on any proposed authorizations for the incidental harassment of marine mammals. Within 45 days of the close of the comment period, NMFS must either issue or deny the authorization.

Summary of Request

NMFS received an application on March 3, 2010, from the Navy for the taking, by harassment, of marine mammals incidental to conducting training exercises at the Navy's Silver Strand Training Complex (SSTC) in the vicinity of San Diego Bay, California, starting late November 2010. After addressing comments from NMFS, the Navy modified its application and submitted a revised application on September 13, 2010. The September 13, 2010, application is the one available for public comment (*see* **ADDRESSES**) and considered by NMFS for this proposed IHA.

Description of the Specific Activity

The Navy has been training and operating in the SSTC for over 60 years. The land, air, and sea spaces of the SSTC have provided, and continue to provide, a safe and realistic training environment for naval forces charged with defense of the Nation. The SSTC, Figure 1–1 of the Navy's IHA application, is located south of the City of Coronado, California and north of the City of Imperial Beach, California. It is composed of ocean and bay training lanes, adjacent beach training areas, ocean anchorages, and inland training areas. To facilitate range management and scheduling, SSTC is divided into numerous training sub-areas (Figure 1–1 of the Navy's IHA application). In-water training sub-areas include: The ocean side of the SSTC divided into two non-contiguous areas, SSTC–NORTH (Boat Lanes 1–10) and SSTC–SOUTH (Boat Lanes 11–14); SSTC–NORTH also includes south San Diego Bay in-water training areas, designated Alpha through Hotel and the Lilly Ann Drop Zone.

The Navy's mission is to maintain, train, and equip combat-ready naval forces capable of winning wars, deterring aggression, and maintaining freedom of the seas. Title 10, U.S. Code Section 5062 directs the Chief of Naval Operations to train all naval forces for combat. The Chief of Naval Operations meets that direction, in part, by conducting littoral training exercises and ensuring naval forces have access to ranges where they can develop and maintain skills for wartime missions. The Navy is proposing the following at SSTC: Continue current training, increase training tempo and types of training, conduct existing routine training at additional locations within SSTC established training areas, construct a demolition pit on inland training areas, and increase access availability of existing beach and inland training areas.

The Navy has conducted a review of its continuing and proposed training conducted at SSTC to determine whether there is a potential for harassment of marine mammals. The following discussion describes the underwater detonation training and pile driving conducted at SSTC. Other training events conducted at SSTC, which are not anticipated to rise to the level of harassment to marine mammals

as defined under the MMPA, are more completely described in the SSTC Draft Environmental Impact Statement.

Underwater Detonations

Underwater detonations are conducted by Explosive Ordnance Disposal (EOD) units, Naval Special Warfare (NSW) units, MH–60S Mine Countermeasure helicopter squadrons, and Mobile Diving and Salvage units at the SSTC. The training provides Navy personnel with hands-on experience with the design, deployment, and detonation of underwater clearance devices of the general type and size that they are required to understand and utilize in combat. EOD groups conduct most of the underwater detonation training at SSTC as part of their training in the detection, avoidance, and neutralization of mines to protect Navy ships and submarines, and offensive mine laying in naval operations.

For safety reasons, underwater detonation training only occurs during daylight and can only be conducted in sea-states of up to Beaufort 3 (presence of large wavelets, crests beginning to break, presence of glassy foam, and/or perhaps scattered whitecaps). Table 1 describes the types of underwater detonation training events conducted within the SSTC.

TABLE 1—DETAILED DESCRIPTIONS OF SSTC UNDERWATER DETONATION TRAINING EVENTS

Training duration/event	Description
Shock Wave Action Generator (SWAG). 1 day	SWAG is a tool used by Explosive Ordnance Disposal (EOD) to disarm enemy limpet mines which have been attached to the hull of a ship. The SWAG is composed of a cylindrical steel tube, 3 inches long and 1 inch wide, containing approximately 0.033 lbs of explosives. The single explosive charge is highly focused. For SWAG training, a metal sheet containing an inert mine is lowered from the side of a small vessel, or small boat. Divers place a single SWAG on the mine that is located mid-water column, within water depths of 10–20 feet. A bag is placed over the mine to catch falling debris.
Mine Counter Measure 1 day	Events are performed from a small craft to locate and identify suspected ordnance either at mid-column or on the sea floor at a water depth of ≤ 72 feet. A detachment dives to locate the suspected ordnance. Once located, a single explosive charge (10–20 lbs NEW) is placed next to the ordnance to neutralize it. The neutralized mine is then raised, towed to shore, and beached.
Floating Mine ..... 1 day	Personnel are inserted into the ocean via helicopter or 24-foot vessel, swim to the floating mine in water depths of less than 72 feet, and place a single explosive countercharge (less than 5 lbs NEW) on the mine. The team retreats a safe distance prior to command detonation of a single countercharge.
Dive Platoon ..... 1 day	Divers are inserted into the ocean via helicopter or 24-foot vessel, dive to depths of 30–72 feet and detonate sequential charges on an inert mine shape placed on the bottom with 3.5 lbs NEW.
Very Shallow Water Mine Counter Measure. 1 day	Locating, identifying, and neutralizing mines (placing explosives on mines for the purposes of destroying them) placed either mid-column or on the sea floor at a water depth of ≤ 24 feet (10–20 lbs NEW). Use of explosives will occur during approximately 60% of training events and will ONLY occur in the SSTC oceanside Boat Lanes. All in-Bay training (40%) will not use any explosives. Personnel are transported to a location in one to two RHIBs and place transponders into the water. The transponders hover over the bottom to provide divers with shallow-water navigation instruction.
Unmanned Underwater Vehicle (UUV). 1 day	Training on use of UUVs. One to two RHIBs are used to transport personnel to a site. Two transponders are placed in the water, with an UUV between them. UUVs explore the area, photograph, and collect hydrographic information. After analysis is complete, appropriate Navy marine mammals are dispatched to localize and mark potential objects, followed by divers who clear the area of identified hazards. Approximately 3% of events involve placing a single 10–15 lbs NEW charge in water depths from 10 to 72 feet on the oceanside of SSTC–NORTH (on the bottom or up to 20 feet from the surface) to neutralize a simulated mine. Use and detonation of explosives will only occur in the SSTC oceanside Boat Lanes 1–14. Bayside UUV use in the Bay will be for operator training and not contain explosives.
MK8 Marine Mammal/ Marine Mammal Systems (MMS). 1 day	Navy divers work with the help of the Navy's trained marine mammals to detect underwater objects. Approximately 10% of training involves the setting of a 13- or 29 lbs NEW charge to detonate the objects. Sequential detonations operate at water depths of 10 to 72 feet and are bottom laid. Single charges are laid within water depths of 24 to 72 feet, 20 feet from the surface or below. Use of explosives will only occur in the SSTC oceanside Boat Lanes 1–14.
Mine Neutralization	Personnel are inserted via helicopter or vessel for underwater demolition training consisting of eight sequential charges placed on the sea floor using 3.5 lbs NEW explosive charges on various inert mine shapes in water depths of 30 to 72 feet to maintain qualifications.
Surf Zone Test Detachment Equipment T&E. 1 day	To support clearance capability in the surf zone (out to 10 feet of water), EOD would test and evaluate the effectiveness of new detection and neutralization equipment (*i.e.*, generally explosive counter-techniques to safely disarm/ render safe mines) in surf conditions. Use of explosives will occur during 1% of training events (0.1 to 20 lbs NEW) and will only occur in the SSTC oceanside Boat Lanes 1–14.
Unmanned Underwater Vehicle Neutralization. 1 day	Training consists of placing 2 sequential charges consisting of a Seafox (3.3 lbs) or Archerfish (3.57 lbs) charge placed from depths of 10 feet to the bottom in water depth less than 72 feet.
Airborne Mine Neutralization System (AMNS). 1 day	The training would involve an MH–60S helicopter deploying an AMNS underwater vehicle into the water that searches for, locates, and destroys mines. The vehicle is self-propelled and unmanned. Approximately 20% of the training would involve the AMNS being remotely detonated (3.5 lbs NEW) when it encounters a simulated (inert) mine shape.
Naval Special Warfare Underwater Demolition Qualification/Certification. 1 day	Demolition Requalifications and Training provides teams with experience in underwater detonations by conducting detonations on metal plates near the shoreline. At water depths of 10 to 72 feet two sequential 12.5–13.75 lbs NEW charges are placed on the bottom or a single 25.5 lbs charge is placed from a depth of 20 feet to the bottom.
Naval Special Warfare Underwater Demolition Training. 1 day	Up to 40 persons participate in the activity, which involves small groups swimming to shore from four inflatable boats located approximately 1,000 yards offshore; boats may be beached on shore. A single charge of less than 10 lbs NEW (if detonated on the bottom) or less than 3.6 lbs NEW (if within five feet of the surface) is manually detonated near the shoreline in water less than 24 feet deep.

TABLE 1—DETAILED DESCRIPTIONS OF SSTC UNDERWATER DETONATION TRAINING EVENTS—Continued

Training duration/event	Description
SEAL Delivery Vehicle/ Advanced SEAL Delivery System Certification to Deploy. 14 days	Designed to certify SDV Team operators for deployment, events include direct action, reconnaissance, and/or counter-terrorism events. Training may include navigation runs into and out of the San Diego Bay, hydrographic reconnaissance, over the beach (OBT) training, combat swimmer, and underwater detonation training. Based on training tempo, multiple events could occur. Underwater detonation events involve a single timed charge of 10 lbs or less NEW in water depths of 24 feet or less placed from mid-water column to the seafloor that may be conducted in coordination with other training events. Use of explosives will only occur in the SSTC oceanside Boat Lanes 1–10. The whole Certification process is a 14 day evolution, although explosives would not be used every day.

Table 2 shows the underwater detonation training event types described above along with the net equivalent weight (NEW) for the charges involved, water depth, and number of events per year. NEW is a conversion that allows the comparison of different mixes of explosive formulas. Since different explosive formulas may have different explosive potentials, explosive potentials are often normalized and expressed as compared to the equivalent explosive potential of TNT (trinitrotoluene). While explosive NEW shown in Table 2 range from 0.03 lbs to 29 lbs, it should be noted that approximately 78% of the annual underwater detonation training events at the SSTC would use explosive weights less than 10 lbs (*see* Figure 2–2 of the Navy's IHA application).

TABLE 2—SSTC ANNUAL UNDERWATER EXPLOSIVE EVENTS

Underwater detonation training event	NEW (lbs)	No. of sequential detonations	Water depth (feet)	Charge depth	No. of training events/yr*	SSTC location
Shock wave action generator (SWAG)	0.033	1/det	10–20	Mid-water	74	SDB.**
Shock wave action generator (SWAG)	0.033	1/det	10–20	Mid-water	16	Oceanside.
Mine Counter Measure	10–20	1/det	≤72	Mid-water	29	Oceanside.
Mine Counter Measure	10–20	1/det	≤72	Bottom	29	Oceanside.
Floating Mine	≤5	1/det	≤72	Surface (<5 ft)	53	Oecanside.
Dive Platoon	3.5	1/det	39–72	Bottom	8	Oceanside.
Very Shallow Water Mine Counter Measure.	0.1–20	1/det	≤24	Bottom	60	Oceanside.
Unmanned underwater vehicle	10–15	1/det	10–72	Bottom to 10 ft from surface.	4	Oceanside.
Marine Mammal System	13 & 29	2/det	10–72	Bottom	8	Oceanside.
Marine Mammal System Operator Course.	13 & 29	1/det	24–72	Bottom to 20 ft from surface.	8	Oceanside.
Mine Neutralization	3.5	8/det	30–72	Bottom	4	Oceanside.
Surf Zone Testing and Evaluation	to 20	1/det	≤ 24	Bottom	2	Oceanside.
Unmanned Underwater Vehicle Neutralization.	3.3 & 3.57	2/det	10–72	Bottom to 10 ft from surface.	4	Oceanside.
Airborne Mine Neutralization System	3.53	1/det	40–72	Mid-water to bottom	10	Oceanside.
Qualification/Certification	12.5–13.75	2/det	10–72	Bottom	8	Oceanside.
Qualification/Certification	25.5	1/det	40–72	Bottom to 20 ft from surface.	4	Oceanside.
Naval Special Warfare Demolition Training.	≤10	1/det	≤24	Bottom	4	Oceanside.
Naval Special Warfare Demolition Training.	≤3.6	1/det	≤24	Surface	8	Oceanside.
SEAL Delivery Vehicle/Advance SEAL Delivery Vehicle.	≤10	1/det	≤24	Bottom to mid-water	40	Oceanside.

* No. of training events is the total amount of underwater detonation training involving each particular Training Event Type. Most Training events are a single detonation (*i.e.*, 1/detonation) per event. However, four of these Training Event Types involve sequential charges during the same training event. Sequential charges are either conducted with a 10-second delay between detonations or 30-minute delay between detonations.

** San Diego Bay.

Elevated Causeway System (ELCAS) Training

Elevated Causeway System (ELCAS) is a modular pre-fabricated causeway pier. ELCAS provides a link between offshore amphibious supply ships with associated lighterage (*i.e.*, small cargo boats and barges) and the shore by bridging the surf zone. Offloaded vehicles and supplies can be driven on the causeway to and from shore.

ELCAS events would occur up to four times a year at either the dedicated training lane within bayside Bravo Beach, or in the oceanside training lanes at SSTC–North. During ELCAS training events, 24-inch wide hollow steel piles are driven into the sand in the surf zone with an impact hammer. Pile installation occurs over a period of approximately 10 days and pile removal over approximately three days. Approximately 101 piles are driven into the beach and surf zone with a diesel impact hammer over the course of approximately 10 days, 24 hours a day (*i.e.*, during the day and night). Each pile takes an average of 10 minutes to install, with around 250 to 300 impacts per pile. Pile driving includes a semi-soft start as part of the normal operating procedure based on the design of the drive equipment. The pile driver increases impact strength as resistance goes up. At first, the pile driver piston

drops a few inches. As resistance goes up, the pile driver piston will drop from a higher distance thus providing more impact due to gravity. The pile driver can take 5 to 7 minutes to reach full impact strength. As sections of piles are installed, causeway platforms are then hoisted and secured onto the piles with hydraulic jacks and cranes. The ELCAS is then used for a period of time, usually less than two weeks to transfer cargo back and forth from sea to shore.

At the end of all the ELCAS training, a vibratory hammer attached to the pile head will be used to remove piles by applying a rapidly alternating force to the pile by rotating eccentric weights about shafts, resulting in an upward vibratory force on the pile. The vertical vibration in the pile disturbs or "liquefies" the sediment next to the pile causing the sediment particles to lose their frictional grip on the pile. This also allows sediment to fill back into the hole that is left after the pile is removed. Removal takes approximately 15 minutes per pile over a period of around 3 days.

In relation to this IHA application, installation and removal of ELCAS support piles were deemed by the Navy to most likely have the potential to harass marine mammals.

Other Training

In addition to underwater detonations and ELCAS, the Navy performs a variety of other shallow water and amphibious training at SSTC. This training includes amphibious vessel and vehicle maneuvering, beach landings, causeway (floating pier) insertions onto the beach, swimming, land demolitions, transfer of fluids from vessel to the shore through a flexible conduit (seawater is used as the fluid during training), and helicopter overflight events.

Potential impacts from other training applicable to marine mammals included helicopter overflights, and marine boat and vessel movement within the SSTC. However, as discussed in detail in the Navy's IHA application, the Navy determined that only underwater detonations and ELCAS pile driving and pile removal training events at SSTC have the potential to rise to the level of harassment as defined under the MMPA, as amended in 1994. NMFS agrees with the Navy's determination.

Description of Marine Mammals in the Area of the Specified Activity

There are four marine mammal species within SSTC marine waters with confirmed or historic occurrence in the study area. These include the California sea lion (*Zalophus californianus*), Pacific harbor seal (*Phoca vitulina richardsii*), California coastal stock of bottlenose dolphin (*Tursiops truncatus*), and more infrequently gray whale (*Eschrichtius robustus*). None are listed as threatened or endangered under the Endangered Species Act (ESA).

The Navy's IHA application contains information on the status, distribution, seasonal distribution, and abundance of each of the species under NMFS jurisdiction mentioned in this document. Please refer to the application for that information (*see* **ADDRESSES**). Additional information can also be found in the NMFS Stock Assessment Reports (SAR). The Pacific 2009 SAR is available at: *http://www.nmfs.noaa.gov/pr/pdfs/sars/po2009.pdf.*

California Sea Lions

The California sea lion is by far the most commonly-sighted pinniped species at sea or on land in the vicinity of the SSTC. Nearly all of the U.S. Stock (more than 95%) of California sea lion breeds and gives birth to pups on San Miguel, San Nicolas, and Santa Barbara islands off California. Smaller numbers of pups are born on the Farallon Islands, and Año Nuevo Island (Lowry *et al.* 1992). In California waters, sea lions represented 97% (381 of 393) of identified pinniped sightings at sea during the 1998–1999 NMFS surveys (Carretta *et al.* 2000). They were sighted during all seasons and in all areas with survey coverage from nearshore to offshore areas (Carretta *et al.* 2000).

Survey data from 1975 to 1978 were analyzed to describe the seasonal shifts in the offshore distribution of California sea lions (Bonnell and Ford 1987). During summer, the highest densities were found immediately west of San Miguel Island. During autumn, peak densities of sea lions were centered on Santa Cruz Island. During winter and spring, peak densities occurred just north of San Clemente Island. The seasonal changes in the center of distribution were attributed to changes in the distribution of the prey species. If California sea lion distribution is determined primarily by prey abundance as influenced by variations in local, seasonal, and inter-annual oceanographic variation, these same areas might not be the center of sea lion distribution every year. Costa *et al.* (2007) was able to indentify kernel home range contours for foraging female sea lions during non-El Nino conditions, although there was some variation over the three years of this tagging study. Melin *et al.* (2008) showed that foraging female sea lions showed significant variability in individual foraging behavior, and foraged farther offshore and at deeper depths during El Nino years as compared to non-El Nino years. The distribution and habitat use of California sea lions vary with the sex of the animals and their reproductive phase. Adult males haul out on land to defend territories and breed from mid-to-late May until late July. The pupping and mating season for sea lions begins in late May and continues through July (Heath 2002). Individual males remain on territories for 27–45 days without going to sea to feed. During August and September, after the mating season, the adult males migrate northward to feeding areas as far away as Washington (Puget Sound) and British Columbia (Lowry *et al.* 1992). They remain there until spring (March–May), when they migrate back to the breeding colonies. Thus, adult males are present in offshore areas of the SSTC only briefly as they move to and from rookeries. Distribution of immature California sea lions is less well known, but some make northward migrations that are shorter in length than the migrations of adult males (Huber 1991). However, most immature sea lions are presumed to remain near the rookeries, and thus remain near SSTC for most of the year (Lowry *et al.* 1992). Adult females remain near the rookeries throughout the year. Most births occur from mid-June to mid-July (peak in late June).

California sea lions feed on a wide variety of prey, including Pacific whiting, northern anchovy, mackerel, squid, sardines, and rockfish (Antonelis *et al.* 1990; Lowry *et al.* 1991; Lowry and Carretta 1999; Lowry and Forney 2005; Bearzi 2006). In Santa Monica Bay, California sea lions are known to follow and feed near bottlenose dolphins (Bearzi 2006), and if in the near shore waters of SSTC, may forage on common coastal beach fish species (corbina and barred surfperch) as dolphins (Allen 2006).

There are limited published at-sea density estimates for pinnipeds within Southern California. Higher densities of California sea lions are observed during cold-water months. At-sea densities likely decrease during warm-water months because females spend more time ashore to give birth and attend to their pups. Radio-tagged female California sea lions at San Miguel Island spent approximately 70% of their time at sea during the non-breeding season (cold-water months) and pups spent an average of 67% of their time ashore during their mother's absence (Melin and DeLong 2000). Different age classes of California sea lions are found in the offshore areas of SSTC throughout the year (Lowry *et al.* 1992). Although adult male California sea lions feed in areas

north of SSTC, animals of all other ages and sexes spend most, but not all, of their time feeding at sea during winter, thus, the winter estimates likely are somewhat low. During warm-water months, a high proportion of the adult males and females are hauled out at terrestrial sites during much of the period, so the summer estimates are low to a greater degree.

The NMFS population estimate of the U.S. Stock of California sea lions is 238,000 (Carretta *et al.* 2010), with a minimum estimate based on a 2005 shore-based survey of all age and sex classes of 141,842 (NMFS, unpublished data, Carretta *et al.* 2010). The California sea lion is not listed under the ESA, and the U.S. Stock, some of which occurs in the SSTC, is not considered a strategic stock under the MMPA.

Pacific Harbor Seal

Harbor seals are considered abundant throughout most of their range from Baja California to the eastern Aleutian Islands. An unknown number of harbor seals also occur along the west coast of Baja California, at least as far south as Isla Asuncion, which is about 100 miles south of Punta Eugenia. Animals along Baja California are not considered to be a part of the California stock because it is not known if there is any demographically significant movement of harbor seals between California and Mexico (Carretta *et al.* 2010). Peak numbers of harbor seals haul out on land during late May to early June, which coincides with the peak of their molt. They generally favor sandy, cobble, and gravel beaches (Stewart and Yochem 1994; 2000), and most haul out on the central California mainland and Santa Cruz Island (Lowry and Carretta 2003; Carretta *et al.* 2010).

There are limited at-sea density estimates for pinnipeds within Southern California. Harbor seals do not make extensive pelagic migrations, but do travel 300–500 km on occasion to find food or suitable breeding areas (Herder 1986; Carretta *et al.* 2007). Nursing of pups begins in late February, and pups start to become weaned in May. Breeding occurs between late March and early May on the southern and northern Channel Islands. When at sea during May and June (and March to May for breeding females), they generally remain in the vicinity of haul-out sites and forage close to shore in relatively shallow waters. Based on likely foraging strategies, Grigg *et al.* (2009) reported seasonal shifts in harbor seal movements based on prey availability.

Harbor seals are opportunistic feeders that adjust their feeding to take advantage of locally and seasonally abundant prey which can include small crustaceans, rock fish, cusk-eel, octopus, market squid, and surfperch (Bigg 1981; Payne and Selzer 1989; Stewart and Yochem 1994; Stewart and Yochem 2000; Baird 2001; Oates 2005). If in the near shore waters of SSTC, harbor seals may forage on common coastal beach fish species, such as corbina and barred surfperch (Allen 2006).

Harbor seals are found in the SSTC throughout the year (Carretta *et al.* 2000) with local densities estimated at 0.010 animals/km^2 during the warm season and 0.020 animals/km^2 during the cold season.

Based on the most recent harbor seal counts (26,333 in May–July 2004, Lowry *et al.* 2005) and Hanan's revised correction factor, the harbor seal population in California is estimated by NMFS to number 34,233 (Carretta *et al.* 2010). The minimum size of the California harbor seal population is 31,600 (Carretta *et al.* 2010). Of the estimated California population (34,233), less than 30% are thought to reside within Southern California due to lack of suitable haul-out sites because of significant beach urbanization (Lowry *et al.* 2008).

The harbor seal is not listed under the ESA, and the California Stock, some of which occurs in the SSTC, is not considered a strategic stock under the MMPA. The California population has increased from the mid-1960s to the mid-1990s, although the rate of increase may have slowed during the 1990s as the population has reached and may be stabilizing at carrying capacity (Hanan 1996, Carretta *et al.* 2010).

Bottlenose Dolphin

There are two distinct populations of bottlenose dolphins within southern California, a coastal population found within 0.5 nm (0.9 km) of shore and a larger offshore population (Hansen 1990; Bearzi *et al.* 2009). The California Coastal Stock is the only one of these two stocks likely to occur within the SSTC. The bottlenose dolphin California Coastal Stock occurs at least from Point Conception south into Mexican waters, at least as far south as San Quintin, Mexico. In southern California, animals are found within 1,600 ft (500 m) of the shoreline 99% of the time and within 820 ft (250 m) 90% of the time (Hanson and Defran 1993). Occasionally, during warm-water incursions such as during the 1982–1983 el Niño event, their range extends as far north as Monterey Bay (Wells *et al.* 1990). Bottlenose dolphins in the Southern California Bight (SCB) appear to be highly mobile within a relatively narrow coastal zone (Defran *et al.* 1999), and exhibit no seasonal site fidelity to the region (Defran and Weller 1999). There is little site fidelity of coastal bottlenose dolphins along the California coast; over 80% of the dolphins identified in Santa Barbara, Monterey, and Ensenada have also been identified off San Diego (Defran *et al.* 1999; Maldini-Feinholz 1996; Carretta *et al.* 2008; Bearzi *et al.* 2009). Bottlenose dolphins could occur in the SSTC at variable frequencies and periods throughout the year based on localized prey availability (Defran *et al.* 1999).

The Pacific coast bottlenose dolphins feed primarily on surfperches (Family Embiotocidae) and croakers (Family Sciaendae) (Norris and Prescott 1961; Walker 1981; Schwartz *et al.* 1992; Hanson and Defran 1993), and also consume squid (*Loligo opalescens*) (Schwartz *et al.* 1992). The coastal stock of bottlenose dolphin utilizes a limited number of fish prey species with up to 74% being various species of surfperch or croakers, a group on non-migratory year-round coastal inhabitant (Defran *et al.* 1999; Allen *et al.* 2006). For Southern California, common croaker prey species include spotfin croaker, yellowfin croaker, and California corbina, while common surfperch species include barred surfperch and walleye surfperch (Allen *et al.* 2006). The corbina and barred surfperch are the most common surf zone fish where bottlenose dolphins have been observed foraging (Allen *et al.* 2006). Defran *et al.* (1999) postulated that the coastal stock of bottlenose dolphins showed significant movement within their home range (Central California to Mexico) in search of preferred but patchy concentrations of near shore prey (*i.e.,* croakers and surfperch). After finding concentrations of prey, animals may then forage within a more limited spatial extent to take advantage of this local accumulation until such time that prey abundance is reduced after which the dolphins once again shift location over larger distances (Defran *et al.* 1999). Bearzi (2005) and Bearzi *et al.* (2009) also noted little site fidelity from coastal bottlenose dolphins in Santa Monica Bay, California, and that these animals were highly mobile with up to 69% of their time spent in travel and dive-travel mode and only 5% of the time in feeding behaviors.

Group size of the California coastal stock of bottlenose dolphins has been reported to range from 1 to 57 dolphins (Bearzi 2005), although mean pod sizes were around 19.8 (Defran and Weller 1999) and 10.1 (Bearzi 2005). An at-sea density estimate of 0.202 animals/km^2 was used for acoustic impact modeling for both the warm and cold seasons as

derived in National Center for Coastal Ocean Science (2005).

Based on photographic mark-recapture surveys conducted along the San Diego coast in 2004 and 2005, population size for the California Coastal Stock of the bottlenose dolphin is estimated to be 323 individuals (CV = 0.13, 95% CI 259–430; Dudzik *et al.* 2005; Carretta *et al.* 2010). This estimate does not reflect that approximately 35% of dolphins encountered lack identifiable dorsal fin marks (Defran and Weller 1999). If 35% of all animals lack distinguishing marks, then the true population size would be closer to 450–500 animals (Carretta *et al.* 2010). The California Coastal Stock of bottlenose dolphins is not listed under the ESA, and is not considered a strategic stock under the MMPA.

Gray Whale

The Eastern North Pacific population is found from the upper Gulf of California (Tershy and Breese 1991), south to the tip of Baja California, and up the Pacific coast of North America to the Chukchi and Beaufort seas. There is a pronounced seasonal north-south migration. The eastern North Pacific population summers in the shallow waters of the northern Bering Sea, the Chukchi Sea, and the western Beaufort Sea (Rice and Wolman 1971). The northern Gulf of Alaska (near Kodiak Island) is also considered a feeding area; some gray whales occur there year-round (Moore *et al.* 2007). Some individuals spend the summer feeding along the Pacific coast from southeastern Alaska to central California (Sumich 1984; Calambokidis *et al.* 1987; 2002). Photo-identification studies indicate that gray whales move widely along the Pacific coast and are often not sighted in the same area each year (Calambokidis *et al.* 2002). In October and November, the whales begin to migrate southeast through Unimak Pass and follow the shoreline south to breeding grounds on the west coast of Baja California and the southeastern Gulf of California (Braham 1984; Rugh 1984). The average gray whale migrates 4,050 to 5,000 nm (7,500 to 10,000 km) at a rate of 80 nm (147 km) per day (Rugh *et al.* 2001; Jones and Swartz 2002). Although some calves are born along the coast of California (Shelden *et al.* 2004), most are born in the shallow, protected waters on the Pacific coast of Baja California from Morro de Santo Domingo (28 °N) south to Isla Creciente (24 °N) (Urbán *et al.* 2003). Main calving sites are Laguna Guerrero Negro, Laguna Ojo de Liebre, Laguna San Ignacio, and Estero Soledad (Rice *et al.* 1981).

A group of gray whales known as the Pacific Coast Feeding Aggregation (PCFA) feeds along the Pacific coast between southeastern Alaska and northern to central California throughout the summer and fall (NMFS 2001; Calambokidis *et al.* 2002; Calambokidis *et al.* 2004). The gray whales in this feeding aggregation are a relatively small proportion (a few hundred individuals) of the overall eastern North Pacific population and typically arrive and depart from these feeding grounds concurrently with the migration to and from the wintering grounds (Calambokidis *et al.* 2002; Allen and Angliss 2010). Although some site fidelity is known to occur, there is generally considerable inter-annual variation since many individuals do not return to the same feeding site in successive years (Calambokidis *et al.* 2000; Calambokidis *et al.* 2004).

The Eastern North Pacific stock of gray whale transits through Southern California during its northward and southward migrations between December and June. Gray whales follow three routes from within 15 to 200 km from shore (Bonnell and Dailey 1993). The nearshore route follows the shoreline between Point Conception and Point Vicente but includes a more direct line from Santa Barbara to Ventura and across Santa Monica Bay. Around Point Vicente or Point Fermin, some whales veer south towards Santa Catalina Island and return to the nearshore route near Newport Beach. Others join the inshore route that includes the northern chain of the Channel Islands along Santa Cruz Island and Anacapa Island and east along the Santa Cruz Basin to Santa Barbara Island and the Osborn Bank. From here, gray whales migrate east directly to Santa Catalina Island and then to Point Loma or Punta Descanso or southeast to San Clemente Island and on to the area near Punta Banda. A significant portion of the Eastern North Pacific stock passes by San Clemente Island and its associated offshore waters (Carretta *et al.* 2000). The offshore route follows the undersea ridge from Santa Rosa Island to the mainland shore of Baja California and includes San Nicolas Island and Tanner and Cortes banks (Bonnell and Dailey 1993).

Peak abundance of gray whales off the coast of San Diego is typically January during the southward migration and in March during the migration north, although females with calves, which depart Mexico later than males or females without calves, can be sighted from March through May or June (Leatherwood 1974; Poole 1984; Rugh *et al.* 2001; Stevick *et al.* 2002; Angliss and Outlaw 2008). Gray whales would be expected to be infrequent migratory transients within the out portions of SSTC only during cold-water months (Carretta *et al.* 2000). Migrating gray whale that might infrequently transit through SSTC would not be expected to forage, and would likely be present for minutes to less than one or two hours at typical travel speeds of 3 knots (approximately 3.5 miles per hour) (Perryman *et al.* 1999; Mate and Urbán-Ramirez 2003). A mean group size of 2.9 gray whales was reported for both coastal (16 groups) and non-coastal (15 groups) areas around San Clemente Island (Carretta *et al.* 2000). The largest group reported was nine animals. The largest group reported by the U.S. Navy (1998) was 27 animals. Gray whales would not be expected in the SSTC from July through November (Rice *et al.* 1981), and are excluded from warm season analysis. Even though gray whale transitory occurrence is infrequent along SSTC, a cold season density is estimated at 0.014 animals per km^2 for purposes of conservative analysis.

Systematic counts of gray whales migrating south along the central California coast have been conducted by shore-based observers at Granite Canyon most years since 1967. The population size of the Eastern North Pacific gray whale stock has been increasing over the past several decades at a rate approximately between 2.5 to 3.3% per year since 1967. The most recent abundance estimates are based on the National Marine Fisheries Service's population estimate of 19,126 individuals as reported in Allen and Angliss (2010).

In 1994, due to steady increases in population abundance, the Eastern North Pacific stock of gray whales was removed from the List of Endangered and Threatened Wildlife, as it was no longer considered endangered or threatened under the ESA (Allen and Angliss 2010). The Eastern North Pacific stock of gray whale is not considered a strategic stock under the MMPA. Even though the stock is within Optimal Sustainable Population, abundance will rise and fall as the population adjusts to natural and man-caused factors affecting the carrying capacity of the environment (Rugh *et al.* 2005). In fact, it is expected that a population close to or at the carrying capacity of the environment will be more susceptible to fluctuations in the environment (Moore *et al.* 2001).

Potential Effects on Marine Mammals and Their Habitat

Anticipated impacts resulting from the Navy's proposed SSTC training activities include disturbance from

underwater detonation events and pile driving from the ELCAS events, if marine mammals are in the vicinity of these action areas.

Impacts From Anthropogenic Noise

Marine mammals exposed to high intensity sound repeatedly or for prolonged periods can experience hearing threshold shift (TS), which is the loss of hearing sensitivity at certain frequency ranges (Kastak *et al.* 1999; Schlundt *et al.* 2000; Finneran *et al.* 2002; 2005). TS can be permanent (PTS), in which case the loss of hearing sensitivity is unrecoverable, or temporary (TTS), in which case the animal's hearing threshold will recover over time (Southall *et al.* 2007). Since marine mammals depend on acoustic cues for vital biological functions, such as orientation, communication, finding prey, and avoiding predators, marine mammals that suffer from PTS or TTS will have reduced fitness in survival and reproduction, either permanently or temporarily. Repeated noise exposure that leads to TTS could cause PTS.

Measured source levels from impact pile driving can be as high as 214 dB re 1 μPa @ 1 m. Although no marine mammals have been shown to experience TTS or PTS as a result of being exposed to pile driving activities, experiments on a bottlenose dolphin (*Tursiops truncates*) and beluga whale (*Delphinapterus leucas*) showed that exposure to a single watergun impulse at a received level of 207 kPa (or 30 psi) peak-to-peak (p-p), which is equivalent to 228 dB re 1 μPa (p-p), resulted in a 7 and 6 dB TTS in the beluga whale at 0.4 and 30 kHz, respectively. Thresholds returned to within 2 dB of the pre-exposure level within 4 minutes of the exposure (Finneran *et al.* 2002). No TTS was observed in the bottlenose dolphin. Although the source level of pile driving from one hammer strike is expected to be much lower than the single watergun impulse cited here, animals being exposed for a prolonged period to repeated hammer strikes could receive more noise exposure in terms of SEL than from the single watergun impulse (estimated at 188 dB re 1 μPa^2-s) in the aforementioned experiment (Finneran *et al.* 2002).

However, in order for marine mammals to experience TTS or PTS, the animals have to be close enough to be exposed to high intensity noise levels for prolonged period of time. Current NMFS standards for preventing injury from PTS and TTS is to require shutdown or power-down of noise sources when a cetacean species is detected within the isopleths corresponding to SPL at received levels equal to or higher than 180 dB re 1 μPa (rms), or a pinniped species at 190 dB re 1 μPa (rms). Based on the best scientific information available, these SPLs are far below the threshold that could cause TTS or the onset of PTS. Certain mitigation measures proposed by the Navy, discussed below, can effectively prevent the onset of TS in marine mammals, by establishing safety zones and monitoring safety zones during the training exercise.

In addition, chronic exposure to excessive, though not high-intensity, noise could cause masking at particular frequencies for marine mammals that utilize sound for vital biological functions. Masking can interfere with detection of acoustic signals such as communication calls, echolocation sounds, and environmental sounds important to marine mammals. Therefore, like TS, marine mammals whose acoustical sensors or environment are being masked are also impaired from maximizing their performance fitness in survival and reproduction.

Masking occurs at the frequency band which the animals utilize. Therefore, since noise generated from the proposed underwater detonation and pile driving and removal is mostly concentrated at low frequency ranges, it may have less effect on high frequency echolocation sounds by killer whales. However, lower frequency man-made noises are more likely to affect detection of communication calls and other potentially important natural sounds such as surf and prey noise. It may also affect communication signals when they occur near the noise band used by the animals and thus reduce the communication space of animals (*e.g.,* Clark *et al.* 2009) and cause increased stress levels (*e.g.,* Foote *et al.* 2004; Holt *et al.* 2009).

Masking can potentially impact marine mammals at the individual, population, community, or even ecosystem levels (instead of individual levels caused by TS). Masking affects both senders and receivers of the signals and can potentially have long-term chronic effects on marine mammal species and populations in certain situations. Recent science suggests that low frequency ambient sound levels have increased by as much as 20 dB (more than 3 times in terms of SPL) in the world's ocean from pre-industrial periods, and most of these increases are from distant shipping (Hildebrand 2009). All anthropogenic noise sources, such as those from underwater explosions and pile driving, contribute to the elevated ambient noise levels and, thus intensify masking. However, single detonations are unlikely to contribute much to masking.

Since all of the underwater detonation events and ELCAS events are planned in a very shallow water situation (wave length >> water depth), where low frequency propagation is not efficient, the noise generated from these activities is predominantly in the low frequency range and is not expected to contribute significantly to increased ocean ambient noise.

Finally, exposure of marine mammals to certain sounds could lead to behavioral disturbance (Richardson *et al.* 1995). Behavioral responses to exposure to sound and explosions can range from no observable response to panic, flight and possibly more significant responses as discussed previously (Richardson *et al.* 1995; Southall *et al.* 2007). These responses include: changing durations of surfacing and dives, number of blows per surfacing, or moving direction and/or speed; reduced/increased vocal activities, changing/cessation of certain behavioral activities (such as socializing or feeding); visible startle response or aggressive behavior (such as tail/fluke slapping or jaw clapping), avoidance of areas where noise sources are located, and/or flight responses (*e.g.,* pinnipeds flushing into water from haulouts or rookeries) (Reviews by Richardson *et al.* 1995; Wartzok *et al.* 2003; Cox *et al.* 2006; Nowacek *et al.* 2007; Southall *et al.* 2007).

The biological significance of many of these behavioral disturbances is difficult to predict, especially if the detected disturbances appear minor. However, the consequences of behavioral modification could be expected to be biologically significant if the change affects growth, survival, and reproduction. Some of these significant behavioral modifications include:

- Drastic change in diving/surfacing patterns (such as those thought to be causing beaked whale stranding due to exposure to military mid-frequency tactical sonar);
- Habitat abandonment due to loss of desirable acoustic environment; and
- Cease feeding or social interaction.

For example, at the Guerreo Negro Lagoon in Baja California, Mexico, which is one of the important breeding grounds for Pacific gray whales, shipping and dredging associated with a salt works may have induced gray whales to abandon the area through most of the 1960s (Bryant *et al.* 1984). After these activities stopped, the lagoon was reoccupied, first by single whales and later by cow-calf pairs.

The onset of behavioral disturbance from anthropogenic noise depends on

both external factors (characteristics of noise sources and their paths) and the receiving animals (hearing, motivation, experience, demography) and is also difficult to predict (Southall *et al.* 2007).

However, the proposed action area is not believed to be a prime habitat for marine mammals, nor is it considered an area frequented by marine mammals. Therefore, behavioral disturbances that could result from anthropogenic construction noise associated with the Navy's proposed training activities are expected to affect only a small number of marine mammals on an infrequent basis.

Impacts From Underwater Detonations at Close Range

In addition to noise induced disturbances and harassment, marine mammals could be killed or injured by underwater explosions due to the impacts to air cavities, such as the lungs and bubbles in the intestines, to the shock wave (Elsayed 1997; Elsayed and Gorbunov 2007). The criterion for mortality and non-auditory injury used in MMPA take authorization is the onset of extensive lung hemorrhage and slight lung injury or ear drum rupture, respectively (*see* Table 3). Extensive lung hemorrhage is considered debilitating and potentially fatal as a result of air embolism or suffocation. In this Incidental Harassment Authorization application, all marine mammals within the calculated radius for 1% probability of onset of extensive lung injury (*i.e.,* onset of mortality) are counted as lethal exposures. The range at which 1% probability of onset of extensive lung hemorrhage is expected to occur is greater than the ranges at which 50% to 100% lethality would occur from closest proximity to the charge or from presence within the bulk cavitation region. (The region of bulk cavitation is an area near the surface above the detonation point in which the reflected shock wave creates a region of cavitation within which smaller animals would not be expected to survive). Because the range for onset of extensive lung hemorrhage for smaller animals exceeds the range for bulk cavitation and all more serious injuries, all smaller animals within the region of cavitation and all animals (regardless of body mass) with more serious injuries than onset of extensive lung hemorrhage are accounted for in the lethal exposures estimate. The calculated maximum ranges for onset of extensive lung hemorrhage depend upon animal body mass, with smaller animals having the greatest potential for impact, as well as water column temperature and density.

However, due to the small detonation that would be used in the proposed SSTC training activities and the resulting small safety zones to be monitored and mitigated for marine mammals in the vicinity of the proposed action area, it is unlikely that marine mammals would be killed or injured by underwater detonations.

Impact Criteria and Thresholds

The effects of an at-sea explosion or pile driving on a marine mammal depends on many factors, including the size, type, and depth of both the animal and the explosive charge/pile being driven; the depth of the water column; the standoff distance between the charge/pile and the animal; and the sound propagation properties of the environment. Potential impacts can range from brief acoustic effects (such as behavioral disturbance), tactile perception, physical discomfort, slight injury of the internal organs and the auditory system, to death of the animal (Yelverton *et al.* 1973; O'Keeffe and Young 1984; DoN 2001). Non-lethal injury includes slight injury to internal organs and the auditory system; however, delayed lethality can be a result of individual or cumulative sub-lethal injuries (DoN 2001). Short-term or immediate lethal injury would result from massive combined trauma to internal organs as a direct result of proximity to the point of detonation or pile driving (DoN 2001).

This section summarizes the marine mammal impact criteria used for the subsequent modeled calculations. Several standard acoustic metrics (Urick 1983) are used to describe the thresholds for predicting potential physical impacts from underwater pressure waves:

- Total energy flux density or Sound Exposure Level (SEL). For plane waves (as assumed here), SEL is the time integral of the instantaneous intensity, where the instantaneous intensity is defined as the squared acoustic pressure divided by the characteristic impedance of sea water. Thus, SEL is the instantaneous pressure amplitude squared, summed over the duration of the signal and has dB units referenced to 1 re μPa^2-s.
- ⅓-octave SEL. This is the SEL in a ⅓-octave frequency band. A ⅓-octave band has upper and lower frequency limits with a ratio of 21:3, creating bandwidth limits of about 23 percent of center frequency.
- Positive impulse. This is the time integral of the initial positive pressure pulse of an explosion or explosive-like wave form. Standard units are Pa-s, but psi-ms also are used.
- Peak pressure. This is the maximum positive amplitude of a pressure wave, dependent on charge mass and range. Units used here are psi, but other units of pressure, such as μPa and Bar, also are used.

1. Harassment Threshold for Sequential Underwater Detonations

There may be rare occasions when sequential underwater detonations are part of a static location event. Sequential detonations are more than one detonation within a 24-hour period in a geographic location where harassment zones overlap. For sequential underwater detonations, accumulated energy over the entire training time is the natural extension for energy thresholds since energy accumulates with each subsequent shot.

For sequential underwater detonations, the acoustic criterion for behavioral harassment is used to account for behavioral effects significant enough to be judged as harassment, but occurring at lower sound energy levels than those that may cause TTS. The behavioral harassment threshold is based on recent guidance from NMFS (NMFS 2009a; 2009b) for the energy-based TTS threshold. The research on pure tone exposures reported in Schlundt *et al.* (2000) and Finneran and Schlundt (2004) provided the pure-tone threshold of 192 dB as the lowest TTS value. The resulting TTS threshold for explosives is 182 dB re 1 μPa^2-s in any ⅓ octave band. As reported by Schlundt *et al.* (2000) and Finneran and Schlundt (2004), instances of altered behavior in the pure tone research generally began 5 dB lower than those causing TTS. The behavioral harassment threshold is therefore derived by subtracting 5 dB from the 182 dB re 1 μPa^2-s in any ⅓ octave band threshold, resulting in a 177 dB re 1 μPa^2-s behavioral disturbance harassment threshold for multiple successive explosives (Table 3).

2. Criteria for ELCAS Pile Driving and Removal

Since 1997, NMFS has been using generic sound exposure thresholds to determine when an activity in the ocean that produces impact sound (*i.e.,* pile driving) results in potential take of marine mammals by harassment (70 FR 1871). Current NMFS criteria (70 FR 1871) regarding exposure of marine mammals to underwater sounds is that cetaceans exposed to sound pressure levels (SPLs) of 180 dB root mean squared (dB_{rms} in units of dB re 1 μPa) or higher and pinnipeds exposed to 190 dB_{rms} or higher are considered to have been taken by Level A (*i.e.,* injurious)

harassment. Marine mammals (cetaceans and pinnipeds) exposed to impulse sounds (*e.g.,* impact pile driving) of 160 dB_{rms} but below Level A thresholds (*i.e.,* 180 or 190 dB) are considered to have been taken by Level B behavioral harassment. Marine mammals (cetaceans and pinnipeds) exposed to non-impulse noise (*e.g.,* vibratory pile driving) at received levels of 120 dB RMS or above are considered to have been taken by Level B behavioral harassment (Table 3).

TABLE 3—EFFECTS CRITERIA FOR UNDERWATER DETONATIONS AND ELCAS PILE DRIVING/REMOVAL

Criterion	Criterion definition	Threshold
Underwater Explosive Criteria		
Mortality	Onset of severe lung injury (1% probability of mortality)	30.5 psi-ms (positive impulse).
Level A Harassment (Injury)	Slight lung injury; or	13.0 psi-ms (positive impulse).
	50% of marine mammals would experience ear drum rupture; and 30% exposed sustain PTS.	205 dB re 1 μPa^2-s (full spectrum energy).
Level B Harassment	TTS (dual criteria)	23 psi (peak pressure; explosives <2,000 lbs), or 182 dB re 1 μPa^2-s (peak ⅓ octave band).
	(sequential detonations only)	177 dB re 1 μPa^2-s.
Pile Driving/Removal Criteria		
Level A Harassment	Pinniped only: PTS caused by repeated exposure to received levels that cause TTS.	190 dB_{rms} re 1 μPa.
	Cetacean only: PTS caused by repeated exposure to received levels that cause TTS.	180 dB_{rms} re 1 μPa.
Level B Behavioral Harassment.	Impulse noise: Behavioral modification of animals	160 dB_{rms} re 1 μPa.
	Non-impulse noise: Behavioral modification of animals	190 dB_{rms} re 1 μPa.

Assessing Harassment From Underwater Detonations

Underwater detonations produced during SSTC training events represent a single, known source. Chemical explosives create a bubble of expanding gases as the material burns. The bubble can oscillate underwater or, depending on charge-size and depth, be vented to the surface in which case there is no bubble-oscillation with its associated low-frequency energy. Explosions produce very brief, broadband pulses characterized by rapid rise-time, great zero-to-peak pressures, and intense sound, sometimes described as impulse. Close to the explosion, there is a very brief, great-pressure acoustic wave-front. The impulse's rapid onset time, in addition to great peak pressure, can cause auditory impacts, although the brevity of the impulse can include less SEL than expected to cause impacts. The transient impulse gradually decays in magnitude as it broadens in duration with range from the source. The waveform transforms to approximate a low-frequency, broadband signal with a continuous sound energy distribution across the spectrum. In addition, underwater explosions are relatively brief, transitory events when compared to the existing ambient noise within the San Diego Bay and at the SSTC.

The impacts of an underwater explosion to a marine mammal are dependent upon multiple factors including the size, type, and depth of both the animal and the explosive. Depth of the water column and the distance from the charge to the animal also are determining factors as are boundary conditions that influence reflections and refraction of energy radiated from the source. The severity of physiological effects generally decreases with decreasing exposure (impulse, sound exposure level, or peak pressure) and/or increasing distance from the sound source. The same generalization is not applicable for behavioral effects, because they do not depend solely on sound exposure level. Potential impacts can range from brief acoustic effects, tactile perception, and physical discomfort to both lethal and non-lethal injuries. Disturbance of ongoing behaviors could occur as a result of non-injurious physiological responses to both the acoustic signature and shock wave from the underwater explosion. Non-lethal injury includes slight injury to internal organs and auditory system. The severity of physiological effects generally decreases with decreasing sound exposure and/or increasing distance from the sound source. Injuries to internal organs and the auditory system from shock waves and intense impulsive noise associated with explosions can be exacerbated by strong bottom-reflected pressure pulses in reverberant environments (Gaspin 1983; Ahroon *et al.* 1996). Nevertheless, the overall size of the explosives used at the SSTC is much smaller than those used during larger Fleet ship and aircraft training events.

All underwater detonations proposed for SSTC were modeled as if they will be conducted in shallow water of 24 to 72 feet, including those that would normally be conducted in very shallow water (VSW) depths of zero to 24 feet. Modeling in deeper than actual water depths causes the modeled results to be more conservative (*i.e.,* it overestimates propagation and potential exposures) than if the underwater detonations were modeled at their actual, representative depths when water depth is less than 24 feet.

The Navy's underwater explosive effects simulation requires six major process components:

- A training event description including explosive type;
- Physical oceanographic and geoacoustic data for input into the acoustic propagation model representing seasonality of the planned operation;
- Biological data for the area including density (and multidimensional animal movement for those training events with multiple detonations);
- An acoustic propagation model suitable for the source type to predict impulse, energy, and peak pressure at ranges and depths from the source;
- The ability to collect acoustic and animal movement information to predict exposures for all animals during a training event (dosimeter record); and
- The ability for post-operation processing to evaluate the dosimeter exposure record and calculate exposure

statistics for each species based on applicable thresholds.

An impact model, such as the one used for the SSTC analysis, simulates the conditions present based on location(s), source(s), and species parameters by using combinations of embedded models (Mitchell *et al.* 2008). The software package used for SSTC consists of two main parts: An underwater noise model and bioacoustic impact model (Lazauski *et al.* 1999; Lazauski and Mitchell 2006; Lazauski and Mitchell 2008).

Location-specific data characterize the physical and biological environments while exercise-specific data construct the training operations. The quantification process involves employment of modeling tools that yield numbers of exposures for each training operation.

During modeling, the exposures are logged in a time-step manner by virtual dosimeters linked to each simulated animal. After the operation simulation, the logs are compared to exposure thresholds to produce raw exposure statistics. It is important to note that dosimeters only were used to determine exposures based on energy thresholds, not impulse or peak pressure thresholds. The analysis process uses quantitative methods and identifies immediate short-term impacts of the explosions based on assumptions inherent in modeling processes, criteria and thresholds used, and input data. The estimations should be viewed with caution, keeping in mind that they do not reflect measures taken to avoid these impacts (*i.e.,* mitigations). Ultimately, the goals of this acoustic impact model were to predict acoustic propagation, estimate exposure levels, and reliably predict impacts.

Predictive sound analysis software incorporates specific bathymetric and oceanographic data to create accurate sound field models for each source type. Oceanographic data such as the sound speed profiles, bathymetry, and seafloor properties directly affect the acoustic propagation model. Depending on location, seasonal variations, and the oceanic current flow, dynamic oceanographic attributes (*e.g.,* sound speed profile) can change dramatically with time. The sound field model is embedded in the impact model as a core feature used to analyze sound and pressure fields associated with SSTC underwater detonations.

The sound field model for SSTC detonations was the Reflection and Refraction in Multilayered Ocean/Ocean Bottoms with Shear Wave Effects (REFMS) model (version 6.03). The REFMS model calculates the combined reflected and refracted shock wave environment for underwater detonations using a single, generalized model based on linear wave propagation theory (Cagniard 1962; Britt 1986; Britt *et al.* 1991).

The model outputs include positive impulse, sound exposure level (total and in 1/3-octave bands) at specific ranges and depths of receivers (*i.e.,* marine mammals), and peak pressure. The shock wave consists of two parts, a very rapid onset "impulsive" rise to positive peak over-pressure followed by a reflected negative under-pressure rarefaction wave. Propagation of shock waves and sound energy in the shallow-water environment is constrained by boundary conditions at the surface and seafloor.

Multiple locations (in Boat Lanes and Echo area) and charge depths were used to determine the most realistic spatial and temporal distribution of detonation types associated with each training operation for a representative year. Additionally, the effect of sound on an animal depends on many factors including:

- Properties of the acoustic source(s): Source level (SL), spectrum, duration, and duty cycle;
- Sound propagation loss from source to animal, as well as, reflection and refraction;
- Received sound exposure measured using well-defined metrics;
- Specific hearing;
- Exposure duration; and
- Masking effects of background and ambient noise.

To estimate exposures sufficient to be considered injury or significantly disrupt behavior by affecting the ability of an individual animal to grow (*e.g.,* feeding and energetics), survive (*e.g.,* behavioral reactions leading to injury or death, such as stranding), reproduce (*e.g.,* mating behaviors), and/or degrade habitat quality resulting in abandonment or avoidance of those areas, dosimeters were attached to the virtual animals during the simulation process. Propagation and received impulse, SEL, and peak pressure are a function of depth, as well as range, depending on the location of an animal in the simulation space.

A detailed discussion of the computational process for the modeling, which ultimately generates two outcomes—the zones of influence (ZOIs) and marine mammal exposures, is presented in the Navy's IHA application.

Severity of an effect often is related to the distance between the sound source and a marine mammal and is influenced by source characteristics (Richardson and Malme 1995). For SSTC, ZOIs were estimated for the different charge weights, charge depths, water depths, and seasons using the REFMS model as described previously. These ZOIs for SSTC underwater detonations by training event are shown in Table 4 and conceptually illustrated in Figure 6–5 in the Navy's IHA application.

For single detonations, the ZOIs were calculated using the range associated with the onset of TTS based on the Navy REFMS model predictions.

For Multiple Successive Explosive events (*i.e.,* sequential detonations) ZOI calculation was based on the range to non-TTS behavior disruption. Calculating the zones of influence in terms of total SEL, 1/3-octave bands SEL, impulse, and peak pressure for sequential (10 sec timed) and multiple controlled detonations (>30 minutes) were slightly different than the single detonations. For the sequential detonations, ZOI calculations considered spatial and temporal distribution of the detonations, as well as the effective accumulation of the resultant acoustic energy. To calculate the ZOI, sequential detonations were modeled such that explosion SEL were summed incoherently to predict zones while peak pressure was not.

TABLE 4—MAXIMUM ZOIS FOR UNDERWATER DETONATION EVENTS AT SSTC

Underwater detonation training event	Season *	Maximum ZOI (yards)				
		TTS		Injury		Mortality
		23 psi	182 dB re 1 μPa²-s	13.0 psi-ms	205 dB re 1 μPa²-s	30.5 psi-ms
Shock wave action generator (SWAG)	Warm	60	20	0	0	0
	Cold	40	20	0	0	0

TABLE 4—MAXIMUM ZOIS FOR UNDERWATER DETONATION EVENTS AT SSTC—Continued

Underwater detonation training event	Season *	Maximum ZOI (yards)				
		TTS		Injury		Mortality
		23 psi	182 dB re 1 μPa²-s	13.0 psi-ms	205 dB re 1 μPa²-s	30.5 psi-ms
Shock wave action generator (SWAG)	Warm	60	20	0	0	0
	Cold	40	20	0	0	0
Mine Counter Measure	Warm	** 470	300	360	80	80
	Cold	430	340	160	80	80
Floating Mine	Warm	240	160	80	40	20
	Cold	260	180	80	40	20
Dive Platoon	Warm	210	330	80	90	50
	Cold	220	370	90	90	50
Unmanned Underwater Vehicle	Warm	440	280	360	80	80
	Cold	400	320	150	80	80
Marine Mammal Systems	Warm	380	420	360	140	90
	Cold	450	** 470	170	140	90
Marine Mammal Systems	Warm	400	330	360	100	90
	Cold	400	370	170	100	90
Mine Neutralization	Warm	330	330	80	90	50
	Cold	360	370	90	90	50
Surf Zone Training and Evaluation	Warm	** 470	300	160	80	80
	Cold	450	340	160	80	80
Unmanned Underwater Vehicle Neutralization	Warm	400	280	80	60	50
	Cold	400	320	90	60	50
Airborne Mine Neutralization System	Warm	220	170	80	40	40
	Cold	230	180	80	40	40
Qualification/Certification	Warm	** 470	330	140	100	80
	Cold	330	370	140	100	80
Qualification/Certification	Warm	430	330	300	90	90
	Cold	** 470	360	170	90	90
Naval Special Warfare Demolition Training	Warm	360	240	160	80	40
	Cold	360	250	160	80	40
Naval Special Warfare Demolition Training	Warm	400	280	80	60	50
	Cold	400	320	90	60	50
Navy Special Warfare SEAL Delivery Vehicle	Warm	360	240	160	80	40
	Cold	360	250	160	80	40

* Warm: November–April; cold: May–October.
** Indicates event types with maximum ZOI as compared to all underwater detonation events.

In summary, all ZOI radii were strongly influenced by charge size and placement in the water column, and only slightly by the environment variables.

Very Shallow Water (VSW) Underwater Detonations Live-Fire Tests ZOI Determination

Measurements of the propagated pressures during single-charge underwater detonation exercises in VSW at SSTC (and San Clemente Island) were conducted in 2002 as part of a study to evaluate existing underwater explosive propagation models for application to VSW conditions (unpublished, Naval Special Warfare Center/Anteon Corporation 2005, cited in the Navy's SSTC IHA Application 2010). The direct measurements made in those tests provided an in-place characterization of pressure propagation for the training exercises as they are actually conducted at the SSTC. During the tests, 2 and 15 lbs charges of NEW explosives were detonated in 6 and 15 feet of water with charges laying on the bottom or two feet off the bottom at SSTC and San Clemente Island. At SSTC, swell conditions precluded detonations at the 6-foot depth. Peak-pressures (unfiltered) and energies—between 100 Hz and 41 kHz—in 1/3-octave bands of highest energies from each detonation were measured in three locations relative to the charges: (1) 5–10 feet seaward of the charge, (2) 280–540 feet seaward, and (3) at about 1,000 feet seaward. Underwater detonations of small 2 lb charges at SSTC were measured at a "near range" location within feet of the charge and at a "single far range" of 525 feet from the charge (unpublished, Naval Special Warfare Center/Anteon Corporation 2005, cited in the Navy's SSTC IHA Application 2010). In the tests, the position of single charges—on and 2 feet off the bottom—affected the propagated peak-pressures. Off-bottom charges produced consistently greater peak-pressures than on-bottom charges as measured at about 200, 500, and 1,000 feet distances. Off-bottom 15 lb charges in 15 feet of water produced between 43–67% greater peak-pressures than on-bottom charges. Greater differences were found when detonations occurred in extremely shallow depths of 6 feet at San Clemente Island (unpublished, Naval Special Warfare Center/Anteon Corporation 2005, cited in the Navy's SSTC IHA Application 2010). Generally, measurements during single-charge exercises produced empirical data that were predicted by the propagation models. At about 1,000 feet seaward, peak-pressure varied from 11–17 pounds psi at different depths, and energies between 100 Hz and 41 kHz in the 1/3-octave bands of highest energies varied from about 175–186 dB re 1 μPa²-s at different depths. From the measurements, it was determined that the range at which the criterion for onset-TTS would be expected to occur in small odontocetes matched the range predicted by a conservative model of propagation that assumed a boundary-less medium and equal sound velocity at all depths in the range—*i.e.,* an "iso-

velocity" model. Bottom and water-column conditions also influence pressure-wave propagation and dissipation of blast residues. In comparison, predictions made by the Navy's REFMS model (*see* above) were found to be unstable across the distances considered under the conditions of VSW with bottom or near bottom charge placement, reflective bottom, and a non-refractive water column (*i.e.,* equal sound velocity at all depths). The source of instability in the REFMS predictions is most likely due to the nature of the VSW zone wherein the ratio of depth to range is very small—a known problem for the REFMS' predictive ray-tracing. Therefore, the determination of ZOIs within the VSW zones was based on the empirical propagation data and iso-velocity model predictions discussed above for charge-weights of 20 lbs or less of NEW explosive on the bottom and for charge-weights of 3.6 lbs or less off the bottom. For SSTC this range was determined to be a 1,200-foot (400-yard) radius out from the site of the detonation with the shoreward half of the implied circle being truncated by the shoreline and extremely shallow water immediately off shore.

Assessing ELCAS Pile Driving and Removal Impacts

Noise associated with ELCAS training includes loud impulsive sounds derived from driving piles into the soft sandy substrate of the SSTC waters to temporarily support a causeway of linked pontoons. Two hammer-based methods will be used to install/remove ELCAS piles: Impact pile driving for installation and vibratory driving for removal. The impact hammer is a large metal ram attached to a crane. A vertical support holds the pile in place and the ram is dropped or forced downward. The energy is then transferred to the pile which is driven into the seabed. The ram is typically lifted by a diesel power source.

The methodology for analyzing potential impacts from ELCAS events is similar to that of analyzing explosives. The ELCAS analysis includes two steps used to calculate potential exposures:

- Estimate the zone of influence for Level A injurious and Level B behavioral exposures for both impact pile driving and vibratory pile removal using the practical spreading loss equation (CALTRANS 2009).
- Estimate the number of species exposed using species density estimates and estimated zones of influence.

The practical spreading loss equation is typically used to estimate the attenuation of underwater sound over distance. The formula for this propagation loss can be expressed as:

$$TL = F * \log (D1/D2)$$

Where:

TL = transmission loss (the sound pressure level at distance D1 minus the sound pressure level at distance D2 from the source, in dB_{rms} re 1μPa)

F = attenuation constant

D1 = distance at which the targeted transmission loss occurs

D2 = distance from which the transmission loss is calculated

The attenuation constant (F) is a site-specific factor based on several conditions, including water depth, pile type, pile length, substrate type, and other factors. Measurements conducted by the California Department of Transportation (CADOT) and other consultants (Greeneridge Science) indicate that the attenuation constant (F) can vary from 5 to 30. Small-diameter steel H-type piles have been found to have high F values in the range of 20 to 30 near the pile (*i.e.,* between 30–60 feet) (CALTRANS 2009). In the absence of empirically measured values at SSTC, NMFS and the Navy worked to set the F value for SSTC to be on the low (conservative, and more predictive) end of the small-diameter steel piles at F = 15, to indicate that the spreading loss is between the spherical (F = 20) and cylindrical (F = 10).

Actual noise source levels of ELCAS pile driving at SSTC depend on the type of hammer used, the size and material of the pile, and the substrate the piles are being driven into. Using known equipment, installation procedures, and applying certain constants derived from other west coast measured pile driving, predicted underwater sound levels from ELCAS pile driving can be calculated. The ELCAS uses 24-inch diameter hollow steel piles, installed using a diesel impact hammer to drive the piles into the sandy on-shore and near-shore substrate at SSTC. For a dock repair project in Rodeo, California in San Francisco Bay, underwater sound pressure level (SPL) for a 24-inch steel pipe pile driven with a diesel impact hammer in less than 15 ft of water depth was measured at 189 dB_{rms} re 1μPa from approximately 33 ft (11 yards) away. SPL for the same type and size pile also driven with a diesel impact hammer, but in greater than 36 ft of water depth, was measured to be 190 to 194 dB_{rms} during the Amoco Wharf repair project in Carquinez Straits, Martinez, California (CADOT 2009). The areas where these projects were conducted have a silty sand bottom with an underlying hard clay layer, which because of the extra effort required to drive into clay, would make these measured pile driving sound levels louder (more conservative) than they would if driving into SSTC's sandy substrate. Given the local bathymetry and smooth sloping sandy bottom at SSTC, ELCAS piles will generally be driven in water depths of 36 ft or less.

Therefore, for the purposes of the Navy's SSTC ELCAS analysis, both the Rodeo repair project (189 dB_{rms}) and the low end of the measured values of the Amoco Wharf repair projects (190 dB_{rms}) are considered to be reasonably representative of sound levels that would be expected during ELCAS pile driving at SSTC. For hollow steel piles of similar size as those proposed for the ELCAS (<24-in diameter) used in Washington State and California pile driving projects, the broadband frequency range of underwater sound was measured between 50 Hz to 10.5 kHz with highest energy at frequencies <1 to 3 kHz (CALTRANS 2009). Although frequencies over 10.5 kHz are likely present during these pile driving projects, they are generally not typically measured since field data has shown a decrease in SPL to less than 120 dB at frequencies greater than 10.5 kHz (Laughlin 2005; 2007). It is anticipated that ELCAS pile driving would generate a similar sound spectra.

For ELCAS training events, using an estimated SPL measurement of 190 dB_{rms} re 1 μPa at 11 yards as described above, the circular ZOIs surrounding a 24-inch steel diesel-driven ELCAS pile can be estimated via the practical spreading loss equation to have radii of:

- 11 yards for Level A injurious harassment for pinnipeds (190 dB_{rms});
- 46 yards for Level A injurious harassment for cetaceans (180 dB_{rms}), and
- 1,094 yards for the Level B behavioral harassment (160 dB_{rms}).

It should be noted that ELCAS pier construction starts with piles being driven near the shore and extends offshore. Near the shore, the area of influence would be a semi-circle and towards the end of the ELCAS (approximately 1,200 feet or 400 yards from the shore) would be a full circle. The above calculated area of influence conservatively assumes that all ELCAS piles are driven offshore at SSTC, producing a circular zone of influence, and discounts the limited propagation from piles driven closer to shore.

Noise levels derived from piles removed via vibratory extractor are different than those driven with an impact hammer. Steel pilings and a vibratory driver were used for pile driving at the Port of Oakland (CALTRANS 2009). Underwater SPLs during this project for a 24-inch steel

pile in 36 ft of water depth at a distance of 11 yards (33 feet) from the source was field measured to be 160 dB_{rms}. The area where this project was conducted (Oakland) has a harder substrate, which because of the extra effort required to drive and remove the pile, would make these measured pile driving sound levels louder (more conservative) than they would if driving and removing into and from SSTC's sandy substrate. Conservatively using this SPL measurement for SSTC and F = 15, the ZOIs for a 24-inch steel pile removed via a vibratory extractor out to different received SPLs can be estimated via the practical spreading loss equation to be:

- < 1 yard for Level A injurious harassment for pinnipeds (190 dB_{rms});
- One (1) yard for Level A injurious harassment for cetaceans (180 dB_{rms}), and
- 5,076 yards for the Level B behavioral harassment (120 dB_{rms}).

As discussed above, the above calculated area of influence conservatively assumes that all ELCAS piles are driven and subsequently removed offshore at SSTC, producing a circular zone of influence.

Proposed Mitigation Measures

In order to issue an incidental take authorization under Section 101(a)(5)(D) of the MMPA, NMFS must set forth the permissible methods of taking pursuant to such activity, and other means of effecting the least practicable adverse impact on such species or stock and its habitat, paying particular attention to rookeries, mating grounds, and areas of similar significance, and on the availability of such species or stock for taking for certain subsistence uses.

For the Navy's proposed SSTC training activities, the Navy worked with NMFS and proposed the following mitigation measures to minimize the potential impacts to marine mammals in the project vicinity as a result of the underwater detonation and ELCAS pile driving/removal events.

Mitigation for Underwater Detonations in Very Shallow Water (0–24 Feet)

The following mitigation procedures formalize practices that are currently in effect at SSTC for detonations conducted in the VSW zone.

1. Easily visible anchored floats would be positioned on a 1,200-foot (400-yard) radius of a roughly semi-circular zone (the shoreward half being bounded by shoreline and immediate off-shore water) around the detonation location for small explosive exercises at the SSTC. These mark the outer limits of the safety zone. The 1,200 foot or 400 yard radius is the safety zone for VSW as determined from empirical measurements as discussed earlier.

2. For each VSW underwater detonation event, a safety-boat with a minimum of one observer would be launched at least 30 minutes prior to detonation and moves through the area around the detonation site. The task of the safety observer is to exclude humans from coming into the area and to augment a shore observer's visual search of the mitigation zone for marine mammals. The safety-boat observer is in constant radio communication with the exercise coordinator and shore observer discussed below.

3. A shore-based observer will also be deployed for VSW detonations in addition to boat based observers. The shore observer will indicate that the area is clear of marine mammals after 10 or more minutes of continuous observation with no marine mammals having been seen in the mitigation zone (1,200 feet or 400 yards) or moving toward it.

4. At least 10 minutes prior to the planned initiation of the detonation event-sequence, the shore observer, on an elevated on-shore position, begins a continuous visual search with binoculars of the mitigation zone. At this time, the safety-boat observer informs the shore observer if any marine mammal has been seen in the safety zone and, together, both search the surface within and beyond the safety zone for marine mammals.

5. The observers (boat and shore based) will indicate that the area is not clear any time a marine mammal is sited in the safety zone or moving toward it and, subsequently, indicate that the area is clear of marine mammals when the animal is out and moving away and no other marine mammals have been sited.

6. Initiation of the detonation sequence would only begin on final receipt of an indication from the shore observer that the area is clear of marine mammals and will be postponed on receipt of an indication from that or any observer that the area is not clear of marine mammals.

7. Following the detonation, visual monitoring of the safety zone continues for 30 minutes for the appearance of any marine mammal in the zone. Any marine mammal appearing in the area would be observed for signs of possible injury.

8. Any marine mammal observed after an VSW underwater detonation either injured or exhibiting signs of distress would be reported to Navy environmental representatives from the regional Navy shore commander (Commander, Navy Region Southwest) and U.S. Pacific Fleet, Environmental Office, San Diego Detachment. Using Marine Mammal Stranding communication trees and contact procedures established for the Southern California Range Complex, the Navy will report these events to the Stranding Coordinator of NMFS' Southwest Regional Office. These voice or e-mail reports will contain the date and time of the sighting, location (or if precise latitude and longitude is not currently available, then the approximate location in reference to an established SSTC beach feature), species description (if known), and indication of the animals status.

Mitigation for Underwater Detonations in Shallow Water

Modeling results for ZOIs discussed previously were used to develop mitigation zones applicable to the mitigation measures for underwater detonations in water between 24–72 feet at the SSTC. The ZOIs effectively represent the mitigation zone that would be established around each detonation point to prevent Level B harassment to marine mammals. While the ZOIs vary between the different types of underwater detonation training, the Navy is proposing to establish a 470-yard mitigation zone for the maximum zone of influence from all underwater detonations except Shock Wave Generator (SWAG) detonations conducted on the oceanside of SSTC (*see* Table 4). This large a mitigation zone is not necessary for any underwater detonations other than the Marine Mammal System operations (*see* Table 4), but it is proposed as a conservative (*i.e.,* over protective) measure. SWAGs have smaller, more directional charges and therefore a small ZOI, so a smaller mitigation zone of 60 yards is proposed.

The mitigation measures for underwater detonation events on the oceanside of SSTC (except for SWAG events) are listed as follows:

I. Underwater Detonation Mitigation (24–72 Feet) (All Except SWAG)

1. A mitigation zone of 1,410 feet (470 yards) will be established around each underwater detonation point. This mitigation zone is based on the maximum range to onset-TTS (either 23 psi or 182 dB re 1 μPa^2-s).

2. A minimum of two boats, including but not limited to small zodiacs and 11-meter Rigid Hulled Inflatable Boats (RHIB) will be deployed. One boat will act as an observer platform, while the other boat is typically the diver support boat.

3. Two observers with binoculars on one small craft/boat will survey the

detonation area and the mitigation zone for marine mammals from at least 30 minutes prior to commencement of the scheduled explosive event and until at least 30 minutes after detonation.

4. In addition to the dedicated observers, all divers and boat operators engaged in detonation events can potentially monitor the area immediately surrounding the point of detonation for marine mammals (and other protected species such as sea turtles).

5. If a marine mammal is sighted within the 1,410-foot (470-yard) mitigation zone or moving towards it, underwater detonation events will be suspended until the marine mammal has voluntarily left the area and the area is clear of marine mammals for at least 30 minutes.

6. Immediately following the detonation, visual monitoring for marine mammals within the mitigation zone will continue for 30 minutes. Any marine mammal observed after an underwater detonation either injured or exhibiting signs of distress will be reported to Navy environmental representatives from the regional Navy shore commander (Commander, Navy Region Southwest) and U.S. Pacific Fleet, Environmental Office, San Diego Detachment. Using Marine Mammal Stranding communication trees and contact procedures established for the Southern California Range Complex, the Navy will report these events to the Stranding Coordinator of NMFS' Southwest Regional Office. These voice or e-mail reports will contain the date and time of the sighting, location (or if precise latitude and longitude is not currently available, then the approximate location in reference to an established SSTC beach feature), species description (if known), and indication of the animal's status.

II. Underwater Detonation Mitigation (SWAG Events Only)

A modified set of mitigation measures would be implemented for SWAG detonations, which involve much smaller charges of 0.03 lbs NEW.

1. A mitigation zone of 180 feet or 60 yards will be established around each SWAG detonation site.

2. A minimum of two boats, including but not limited to small zodiacs and 11-meter Rigid Hulled Inflatable Boats (RHIB) will be deployed. One boat will act as an observer platform, while the other boat is typically the diver support boat.

3. Two observers with binoculars on one small craft/boat will survey the detonation area and the mitigation zone for marine mammals (and other protected species such as sea turtles) from at least 10 minutes prior to commencement of the scheduled explosive event and until at least 10 minutes after detonation.

4. In addition to the dedicated observers, all divers and boat operators engaged in detonation events can potentially monitor the area immediately surrounding the point of detonation for marine mammals.

5. Divers and personnel in support boats would monitor for marine mammals out to the 180 feet (60 yards) mitigation zone for 10 minutes prior to any detonation.

6. After the detonation, visual monitoring for marine mammals would continue for 10 minutes. Any marine mammal observed after an underwater SWAG detonation either injured or exhibiting signs of distress will be reported to Navy environmental representatives from the regional Navy shore commander (Commander, Navy Region Southwest) and U.S. Pacific Fleet, Environmental Office, San Diego Detachment. Using Marine Mammal Stranding communication trees and contact procedures established for the Southern California Range Complex, the Navy will report these events to the Stranding Coordinator of NMFS' Southwest Regional Office. These voice or e-mail reports will contain the date and time of the sighting, location (or if precise latitude and longitude is not currently available, then the approximate location in reference to an established SSTC beach feature), species description (if known), and indication of the animal's status.

Mitigation for ELCAS Training at SSTC

NMFS worked with the Navy and proposes the below mitigation procedures for ELCAS pile driving and removal events along the oceanside Boat Lanes at the SSTC for marine mammal species.

1. *Mitigation Zone:* A mitigation zone will be established at 150 feet (50 yards) from ELCAS pile driving and pile removal events. This mitigation zone is based on the predicted range to Level A harassment (180 dB_{rms}) for cetaceans, and is being applied conservatively to both cetaceans and pinnipeds.

2. Monitoring will be conducted within the 150 foot or 50 yard mitigation zone surrounding ELCAS pile driving and removal events for the presence of marine mammals before, during, and after pile driving and removal events.

3. If marine mammals are found within the 150-foot (50-yard) mitigation zone, pile removal events will be halted until the marine mammals have voluntarily left the mitigation zone.

4. Monitoring for marine mammals will take place concurrent with pile removal events and 30 minutes prior to pile driving and removal commencement. A minimum of one trained observer will be placed on shore, on the ELCAS, or in a boat at the best vantage point(s) practicable to monitor for marine mammals.

5. Monitoring observer(s) will implement shut-down/delay procedures by calling for shut-down to the hammer operator when marine mammals are sighted within the mitigation zone.

6. Soft Start—ELCAS pile driving would implement a soft start as part of normal construction procedures. The pile driver increases impact strength as resistance goes up. At first, the pile driver piston drops a few inches. As resistance goes up, the pile driver piston will drop from a higher distance thus providing more impact due to gravity. This will allow marine mammals in the project area to vacate or begin vacating the area minimizing potential harassment.

7. *ELCAS Acoustic Monitoring:* The Navy proposes, under the associated SSTC marine mammal monitoring plan, to conduct underwater acoustic propagation monitoring during the first available ELCAS deployment at the SSTC under this Incidental Harassment Authorization application. This acoustic monitoring would provide empirical field data on ELCAS pile driving and removal underwater source levels, and propagation specific to ELCAS training at the SSTC. These results will be used to either confirm or refine the Navy's exposure predictions (source level, F value, exposures) described earlier.

NMFS has carefully evaluated these proposed mitigation measures. Our evaluation of potential measures included consideration of the following factors in relation to one another:

- The manner in which, and the degree to which, the successful implementation of the measure is expected to minimize adverse impacts to marine mammals,
- The proven or likely efficacy of the specific measure to minimize adverse impacts as planned, and
- The practicability of the measure for applicant implementation, including consideration of personnel safety, practicality of implementation.

Based on our evaluation of these proposed measures, NMFS has preliminarily determined that the proposed mitigation measures provide the means of effecting the least practicable adverse impacts on marine mammal species or stocks and their

habitat, paying particular attention to rookeries, mating grounds, and areas of similar significance.

Proposed Monitoring and Reporting Measures

Proposed Monitoring Measures

In order to issue an ITA for an activity, Section 101(a)(5)(D) of the MMPA states that NMFS must set forth "requirements pertaining to the monitoring and reporting of such taking". The MMPA implementing regulations at 50 CFR 216.104(a)(13) indicate that requests for IHAs must include the suggested means of accomplishing the necessary monitoring and reporting that will result in increased knowledge of the species and of the level of taking or impacts on populations of marine mammals that are expected to be present. The proposed monitoring and reporting measures for the Navy's proposed SSTC training exercises are provided below.

The SSTC Monitoring Program, proposed by the Navy as part of its IHA application, is focused on mitigation based monitoring and presented more fully in Appendix A of the Navy's IHA application. Main monitoring techniques include use of civilian scientists as marine mammal observers during a sub-set of SSTC underwater detonation events to validate the Navy's pre and post event mitigation effectiveness, and observe marine mammal reaction, or lack of reaction to SSTC training events. Also, as stated in the Proposed Mitigation section, the Navy proposes to conduct an acoustic monitoring project during the first field deployment of the ELCAS to the SSTC. The objective of this project under the SSTC Monitoring Plan would be to empirically measure site-specific ELCAS underwater sound propagation at SSTC, with the goal of refining future marine mammal exposure estimates.

Monitoring methods proposed for the SSTC training exercise include:

- Marine Mammal Observers (MMO) at SSTC underwater detonations.
- ELCAS underwater propagation monitoring project.
- Leverage aerial monitoring from other Navy-funded monitoring.

I. Marine Mammal Observer at a Sub-Set of SSTC Underwater Detonations

Civilian scientists acting as MMOs will be used to observe a sub-set of the SSTC underwater detonation events. The goal of MMOs is two-fold. One, to validate the suite of SSTC specific mitigation measures applicable to a sub-set of SSTC training events, and to observe marine mammal behavior in the vicinity of SSTC training events.

MMOs will be field-experienced observers that are either Navy biologists or contracted marine biologists. These civilian MMOs will be placed either alongside existing Navy SSTC operators during a sub-set of training events, or on a separate small boat viewing platform. Use of MMOs will verify Navy mitigation efforts within the SSTC, offer an opportunity for more detailed species identification, provide an opportunity to bring animal protection awareness to Navy personnel at SSTC, and provide the opportunity for an experienced biologist to collect data on marine mammal behavior. Data collected by the MMOs is anticipated to integrate with a Navy-wide effort to assess Navy training impacts on marine mammals (DoN 2009). Events selected for MMO participation will be an appropriate fit in terms of security, safety, logistics, and compatibility with Navy underwater detonation training.

MMOs will collect the same data currently being collected for more elaborate offshore ship-based observations including but not limited to:

(1) Location of sighting;
(2) Species;
(3) Number of individuals;
(4) Number of calves present;
(5) Duration of sighting;
(6) Behavior of marine animals sighted;
(7) Direction of travel;
(8) Environmental information associated with sighting event including Beaufort sea state, wave height, swell direction, wind direction, wind speed, glare, percentage of glare, percentage of cloud cover; and
(9) When in relation to Navy training did the sighting occur [before, during or after the detonation(s)].

The MMOs will not be part of the Navy's formal reporting chain of command during their data collection efforts. Exceptions will be made if a marine mammal is observed by the MMO within the SSTC specific mitigation zones the Navy has formally proposed to the NMFS. The MMO will inform any Navy operator of the sighting so that appropriate action may be taken by the Navy trainees.

II. Leverage From Existing Navy-Funded Marine Mammal Research

The Navy will report results obtained annually from the Southern California Range Complex Monitoring Plan (DoN 2009) for areas pertinent to the SSTC. In the Navy's 2011 Letter of Authorization renewal application and subsequent Year 3 Southern California Monitoring Plan (DoN 2010), a new study area for aerial visual survey was created. This area would start at the shoreline of the oceanside Boat Lanes at SSTC and extend seaward to approximately 10 nm offshore. The goal of these aerial visual surveys is to document marine mammal occurrence within a given sub-area off Southern California. Significant surface area can be covered by a survey aircraft flying at 800 to 1,000 feet for approximately five hours. The use of both airplanes and helicopters as aerial platforms will be considered for the survey area off SSTC. Both aircraft type, in particular the helicopter, provide excellent platforms for documenting marine mammal behaviors and through digital photography and digital video.

Reporting Measures

In order to issue an ITA for an activity, section 101(a)(5)(A) of the MMPA states that NMFS must set forth "requirements pertaining to the monitoring and reporting of such taking." Effective reporting is critical both to compliance as well as ensuring that the most value is obtained from the required monitoring.

I. General Notification of Injured or Dead Marine Mammals

Navy personnel will ensure that NMFS (regional stranding coordinator) is notified immediately (or as soon as clearance procedures allow) if an injured or dead marine mammal is found during or shortly after, and in the vicinity of, any Navy training exercises involving underwater detonations or pile driving. The Navy will provide NMFS with species or description of the animal(s), the condition of the animal(s) (including carcass condition if the animal is dead), location, time of first discovery, observed behaviors (if alive), and photo or video (if available).

II. Final Report

The Navy will submit a final report to the Office of Protected Resources, NMFS, no later than 90 days after the expiration of the LOA. The report will, at a minimum, includes the following marine mammal sighting information:

(1) Location of sighting;
(2) Species;
(3) Number of individuals;
(4) Number of calves present;
(5) Duration of sighting;
(6) Behavior of marine animals sighted;
(7) Direction of travel;
(8) Environmental information associated with sighting event including Beaufort sea state, wave height, swell direction, wind direction, wind speed, glare, percentage of glare, percentage of cloud cover; and

(9) When in relation to Navy training did the sighting occur [before, during or after the detonation(s)].

In addition, the Navy would provide the information described below for all of its underwater detonation events and ELCAS events under the IHA, if issued. The information includes: (1) Total number of each type of underwater detonation events (of these listed in Table 2 of this document) conducted at the SSTC, and (2) total number of piles driven and extracted during the ELCAS exercise.

The Navy will submit to NMFS a draft report as described above and will respond to NMFS comments within 3 months of receipt. The report will be considered final after the Navy has addressed NMFS' comments, or three months after the submittal of the draft if NMFS does not comment by then.

Estimated Take by Incidental Harassment

Estimated Marine Mammal Exposures From SSTC Underwater Detonations

The quantitative exposure modeling methodology estimated numbers of individuals exposed to the effects of underwater detonations exceeding the thresholds used, as if no mitigation measures were employed.

All estimated exposures are seasonal averages (mean) plus one standard deviation using ½ of the yearly training tempo to represent each season. Taking this approach was an effort to be conservative (*i.e.,* allow for an overestimate of exposure) when estimating exposures typical of training during a single year.

Table 5 shows number of annual predicted exposures by species for all underwater detonation training within the SSTC. As stated previously, only events with sequential detonations were examined for non-TTS behavior disruption.

TABLE 5—SSTC MODELED ESTIMATES OF SPECIES EXPOSED TO UNDERWATER DETONATIONS WITHOUT IMPLEMENTATION OF MITIGATION MEASURES

Species		Annual Marine Mammal Exposure (All Sources)		
		Level B Behavior (Multiple Successive Explosive Events Only)	*Level B TTS*	*Level A*
		177 dB re 1 μPa	*182 dB re 1 μPa²-s/23 psi*	*205 dB re 1 μPa²-s/13.0 psi-ms*
Gray Whale				
Warm	.....	.....	.....	.....
Cold	0	0	0	0
Bottlenose Dolphin				
Warm	30	43	0	0
Cold	40	55	0	0
California Sea Lion				
Warm	4	4	0	0
Cold	40	51	0	0
Harbor Seal				
Warm	0	0	0	0
Cold	0	0	0	0
Total Annual Exposures	114	153	0	0

In summary, for all underwater detonations, the Navy's impact model predicted that no mortality and/or Level A harassment (injury) would occur to marine mammal species and stocks within the proposed action area.

For non-sequential (*i.e.,* single detonation) training events, the Navy's impact model predicted a total of 153 annual exposures that could result in Level B harassment (TTS), which include 98 annual exposures to bottlenose dolphins and 55 annual exposures to California sea lions.

For sequential (Multiple Successive Explosive events) training events, the Navy's impact model predicted a total of 114 annual exposures that could result in Level B behavioral harassment, which include 70 annual exposures to bottlenose dolphins and 44 annual exposures to California sea lions.

Estimated Marine Mammal Exposures From ELCAS Pile Driving and Removal

I. Pile Driving

Using the marine mammal densities presented in the Navy's IHA application, the number of animals exposed to annual Level B harassment from ELCAS pile driving can be estimated:

Exposures per event = ZOI × (warm season marine mammal density + cold season marine mammal density), with ZOI = $\pi \times R^2$, where R is the radius of the ZOI.

Area of Exposures per year = (Exposures per event × number of days of pile driving)/year.

Pile driving is estimated to occur 10 days per ELCAS training event, with up to four training exercises being conducted per year (40 days per year).

Based on the assessments conducted, using the methodology discussed previously, and without consideration of current mitigation measures, ELCAS pile driving is predicted to result in no Level A Harassments to any marine mammal (received SPL of 190 dB_{rms} for pinnipeds and 180 dB_{rms} re 1 μPa for cetacean, respectively) but 40 bottlenose dolphins and 20 California sea lions by Level B behavioral harassment (Table 6).

II. Pile Removal

Using the marine mammal densities presented in the Navy's IHA application, the number of animals exposed to annual Level B harassment from ELCAS pile driving can be estimated:

Exposures per event = ZOI × (warm season marine mammal density + cold season marine mammal density), with ZOI = $\pi \times R^2$, where R is the radius of the ZOI.

Area of Exposures per year = (Exposures per event × number of days of pile removal)/year.

Pile removal is estimated to occur 3 days per ELCAS training event, with up to four training exercises being conducted per year (12 days per year).

Based on the assessments conducted, using the methodology discussed previously, and without consideration of current mitigation measures, ELCAS pile driving is predicted to result in no Level A Harassments to any marine mammal (received SPL of 190 dB_{rms} for pinnipeds and 180 dB_{rms} re 1 μPa for cetacean, respectively) but in Level B behavioral harassment of 168 bottlenose dolphins, 102 California sea lions, 12 harbor seals, and 6 gray whales (Table 6).

TABLE 6—EXPOSURE ESTIMATES FROM ELCAS PILE DRIVING AND REMOVAL PRIOR TO IMPLEMENTATION OF MITIGATION MEASURES

Species	Annual Marine Mammal Exposure (All Sources)			
	Level B Behavior (Non-Impulse) 120 dB_{rms} re 1 μPa	*Level B Behavior (Impulse) 120 dB_{rms} re 1 μPa*	*Level A (Cetacean) 120 dB_{rms} re 1 μPa*	*Level A (Pinniped) 120 dB_{rms} re 1 μPa*
Gray Whale:				
Installation	N/A	0	0	0
Removal	6	N/A	0	0
Bottlenose Dolphin:				
Installation	N/A	40	0	0
Removal	168	N/A	0	0
California Sea Lion:				
Installation	N/A	20	0	0
Removal	102	N/A	0	0
Harbor Seal:				
Installation	N/A	0	0	0
Removal	12	N/A	0	0
Total Annual Exposures	288	60	0	0

Potential Impacts to Marine Mammal Habitat

The proposed training activities at SSTC will not result in any permanent impact on habitats used by marine mammals, and potentially short-term to minimum impact to the food sources such as forage fish. There are no known haul-out sites, foraging hotspots, or other ocean bottom structures of significant biological importance to harbor seals, California sea lions, or bottlenose dolphins within SSTC. Therefore, the main impact associated with the proposed activity will be temporarily elevated noise levels and the associated direct effects on marine mammals, as discussed previously.

The primary source of effects to marine mammal habitat is exposures resulting from underwater detonation training and ELCAS pile driving and removal training events. Other sources that may affect marine mammal habitat include changes in transiting vessels, vessel strike, turbidity, and introduction of fuel, debris, ordnance, and chemical residues. However, each of these components was addressed in the SSTC Environmental Impact Statement (EIS) and it is the Navy's assertion that there would be no likely impacts to marine mammal habitats from these training events.

The most likely impact to marine mammal habitat occurs from underwater detonation and pile driving and removal effects on likely marine mammal prey (*i.e.,* fish) within SSTC.

There are currently no well-established thresholds for estimating effects to fish from explosives other than mortality models. Fish that are located in the water column, in proximity to the source of detonation could be injured, killed, or disturbed by the impulsive sound and could leave the area temporarily. Continental Shelf Inc. (2004) summarized a few studies conducted to determine effects associated with removal of offshore structures (*e.g.,* oil rigs) in the Gulf of Mexico. Their findings revealed that at very close range, underwater explosions are lethal to most fish species regardless of size, shape, or internal anatomy. In most situations, cause of death in fish has been massive organ and tissue damage and internal bleeding. At longer range, species with gas-filled swimbladders (*e.g.,* snapper, cod, and striped bass) are more susceptible than those without swimbladders (*e.g.,* flounders, eels).

Studies also suggest that larger fish are generally less susceptible to death or injury than small fish. Moreover, elongated forms that are round in cross section are less at risk than deep-bodied forms. Orientation of fish relative to the shock wave may also affect the extent of injury. Open water pelagic fish (*e.g.,* mackerel) seem to be less affected than reef fishes. The results of most studies are dependent upon specific biological, environmental, explosive, and data recording factors.

The huge variation in fish populations, including numbers, species, sizes, and orientation and range from the detonation point, makes it very difficult to accurately predict mortalities at any specific site of detonation. All underwater detonations are of small scale (under 29 lbs NEW), and the proposed training exercises would be conducted in several areas within the large SSTC Study Area over the seasons during the year. Most fish species experience a large number of natural mortalities, especially during early life-stages, and any small level of mortality caused by the SSTC training exercises involving explosives will likely be insignificant to the population as a whole.

Therefore, potential impacts to marine mammal food resources within the SSTC are expected to be minimal given both the very geographic and spatially limited scope of most Navy at-sea activities including underwater detonations, and the high biological productivity of these resources. No short or long term effects to marine mammal food resources from Navy activities are anticipated within the SSTC Study Area.

Subsistence Harvest of Marine Mammals

NMFS has preliminarily determined that the Navy's proposed training activities at the SSTC would not have an unmitigable adverse impact on the availability of the affected species or stocks for subsistence use since there are no such uses in the specified area.

Negligible Impact and Small Numbers Analysis and Determination

Pursuant to NMFS' regulations implementing the MMPA, an applicant is required to estimate the number of animals that will be "taken" by the specified activities (*i.e.,* takes by harassment only, or takes by harassment, injury, and/or death). This estimate informs the analysis that NMFS must perform to determine whether the activity will have a "negligible impact" on the species or stock. Level B (behavioral) harassment occurs at the level of the individual(s) and does not assume any resulting population-level consequences, though there are known avenues through which behavioral disturbance of individuals can result in population-level effects. A negligible impact finding is based on the lack of likely adverse effects on annual rates of recruitment or survival (*i.e.,* population-level effects). An estimate of the number of Level B harassment takes alone is not enough information on which to base an impact determination.

In addition to considering estimates of the number of marine mammals that might be "taken" through behavioral harassment, NMFS considers other factors, such as the likely nature of any responses (their intensity, duration, *etc.*), the context of any responses (critical reproductive time or location, migration, *etc.*), as well as the number and nature of estimated Level A takes, the number of estimated mortalities, and effects on habitat.

The Navy's specified activities have been described based on best estimates of the planned training exercises at SSTC action area. Some of the noises that would be generated as a result of the proposed underwater detonation and ELCAS pile driving activities, are high intensity. However, the explosives that the Navy plans to use in the proposed SSTC action area are all small detonators under 29 lbs NEW, which result in relatively small ZOIs. In addition, the locations where the proposed training activities are planned are shallow water areas which would effectively contain the spreading of explosive energy within the bottom boundary. Taking the above into account, along with the fact that NMFS anticipates no mortalities and injuries to result from the action, the fact that there are no specific areas of reproductive importance for marine mammals recognized within the SSTC area, the sections discussed below, and dependent upon the implementation of the proposed mitigation measures, NMFS has determined that Navy training exercises utilizing underwater detonations and ELCAS pile driving and removal will have a negligible impact on the affected marine mammal species and stocks present in the SSTC Study Area.

NMFS' analysis of potential behavioral harassment, temporary threshold shifts, permanent threshold shifts, injury, and mortality to marine mammals as a result of the SSTC training activities was provided earlier in this document and is analyzed in more detail below.

Behavioral Harassment

As discussed earlier, the Navy's proposed SSTC training activities would use small underwater explosives with maximum NEW of 29 lbs 16 events per year in areas of small ZOIs that would mostly eliminate the likelihood of mortality and injury to marine mammals. In addition, these detonation events are widely dispersed in several designated sites within the SSTC Study Area. The probability that detonation events will overlap in time and space with marine mammals is low, particularly given the densities of marine mammals in the vicinity of SSTC Study Area and the implementation of monitoring and mitigation measures. Moreover, NMFS does not expect animals to experience repeat exposures to the same sound source as animals will likely move away from the source after being exposed. In addition, these isolated exposures, when received at distances of Level B behavioral harassment (*i.e.,* 177 dB re 1 μPa^2-s), are expected to cause brief startle reactions or short-term behavioral modification by the animals. These brief reactions and behavioral changes are expected to disappear when the exposures cease. Therefore, these levels of received impulse noise from detonation are not expected to affect annual rates or recruitment or survival.

In addition, ELCAS events planned at SSTC would employ relatively small hammers for impact and vibratory pile driving and removal, with extremely small safety radii for 180 dB (46 yards for impact pile driving and 1 yard for vibratory pile removal) and 190 dB (11 yards for impact pile driving and < 1 yard for vibratory pile removal) zones. Therefore, it is highly unlikely that any marine mammals would occur in such close proximity to the pile driving site.

TTS

NMFS and the Navy have estimated that individuals of some species of marine mammals may sustain some level of temporary threshold shift TTS from underwater detonations. TTS can last from a few minutes to days, be of varying degree, and occur across various frequency bandwidths. The TTS sustained by an animal is primarily classified by three characteristics:

- *Frequency*—Available data (of mid-frequency hearing specialists exposed to mid to high frequency sounds—Southall *et al.* 2007) suggest that most TTS occurs in the frequency range of the source up to one octave higher than the source (with the maximum TTS at ½ octave above).
- *Degree of the shift (i.e., how many dB is the sensitivity of the hearing reduced by)*—Generally, both the degree of TTS and the duration of TTS will be greater if the marine mammal is exposed to a higher level of energy (which would occur when the peak dB level is higher or the duration is longer). Since the impulse from detonation is extremely brief, an animal would have to approach very close to the detonation site to increase the received SEL. The threshold for the onset of TTS for detonations is a dual criteria: 182 dB re 1 μPa^2-s or 23 psi, which might be received at distances from 20–470 yards from the centers of detonation based on the types of NEW involved to receive the SEL that causes TTS compared to similar source level with longer durations (such as sonar signals).
- *Duration of TTS (Recovery time)*—Of all TTS laboratory studies, some using exposures of almost an hour in duration or up to SEL at 217 dB re 1 μPa^2-s, almost all recovered within 1 day (or less, often in minutes), though in one study (Finneran *et al.* 2007), recovery took 4 days.

Although the degree of TTS depends on the received noise levels and exposure time, all studies show that TTS is reversible and animals' sensitivity is expected to recover fully in minutes to hours based on the fact that the proposed underwater detonations are small in scale and isolated. Therefore, NMFS expects that TTS would not affect annual rates of recruitment or survival.

Acoustic Masking or Communication Impairment

As discussed above, it is also possible that anthropogenic sound could result in masking of marine mammal communication and navigation signals.

However, masking only occurs during the time of the signal (and potential secondary arrivals of indirect rays), versus TTS, which occurs continuously for its duration. Impulse sounds from underwater detonation and pile driving are brief and the majority of most animals' vocalizations would not be masked. Although impulse noises such as those from underwater explosives and impact pile driving tend to decay at distance, and thus become non-impulse, give the area of extremely shallow water (which effectively attenuates low frequency sound of these impulses) and the small NEW of explosives, the SPLs at these distances are expected to be barely above ambient level. Therefore, masking effects from underwater detonation are expected to be minimal and unlikely. If masking or communication impairment were to occur briefly, it would be in the frequency ranges below 100 Hz, which overlaps with some mysticete vocalizations; however, it would likely not mask the entirety of any particular vocalization or communication series because of the short impulse.

PTS, Injury, or Mortality

The modeling for take estimates show that no marine mammal would be taken by Level A harassment (injury, PTS included) or mortality due to the low power of the underwater detonation and the small ZOIs.

Based on these assessments, NMFS determined that approximately 6 gray whales, 221 California sea lions, 12 harbor seals, and 323 bottlenose dolphins could be affected by Level B harassment (TTS and sub-TTS) as a result of the proposed SSTC training activities. These numbers represent approximately 0.02%, 0.93%, and 0.06% of gray whales (eastern North Pacific stock), California sea lions (U.S. Stock), and harbor seal (California stock), respectively in the vicinity of the proposed SSTC Study Area (calculation based on NMFS 2009 U.S. Pacific Marine Mammal Stock Assessment; Carretta *et al.* 2010). However, the estimated take of California coastal stock of bottlenose dolphin indicates that the entire population (100%) could be affected as the result of the Navy's proposed SSTC training activities. Given the fact that these annual takes are spread over the entire year, and that on average each individual bottlenose dolphin would be exposed once to received levels that could cause Level B harassment in a year, NMFS does not believe such adverse effects would be biologically significant as to affect the growth, survivor, and reproduction of this stock.

Additionally, as discussed previously, the aforementioned take estimates do not account for the implementation of mitigation measures. With the implementation of mitigation and monitoring measures, NMFS expects that the takes would be reduced further. Coupled with the fact that these impacts will likely not occur in areas and times critical to reproduction, NMFS has preliminarily determined that the total taking incidental to the Navy's proposed SSTC training activities would have a negligible impact on the marine mammal species and stocks present in the SSTC Study Area.

Endangered Species Act (ESA)

No marine mammal species are listed as endangered or threatened under the ESA with confirmed or possible occurrence in the study area. Therefore, section 7 consultation under the ESA for NMFS's proposed issuance of an MMPA authorization is not warranted.

National Environmental Policy Act (NEPA)

The Navy is preparing an Environmental Impact Statement (EIS) for the proposed SSTC training activities. A draft EIS was released in July 2010 and it is available at *http://www.silverstrandtrainingcomplexeis.com/EIS.aspx/*. NMFS is a cooperating agency (as defined by the Council on Environmental Quality (40 CFR 1501.6)) in the preparation of the EIS. NMFS has reviewed the Draft EIS and will be working with the Navy on the Final EIS (FEIS).

NMFS intends to adopt the Navy's FEIS, if adequate and appropriate, and we believe that the Navy's FEIS will allow NMFS to meet its responsibilities under NEPA for the issuance of the IHA for training activities in the SSTC Study Area. If the Navy's FEIS is not adequate, NMFS will supplement the existing analysis and documents to ensure that we comply with NEPA prior to the issuance of the IHA.

Dated: October 14, 2010.

James H. Lecky,

Director, Office of Protected Resources, National Marine Fisheries Service.

[FR Doc. 2010–26286 Filed 10–18–10; 8:45 am]

BILLING CODE 3510–22–P

DEPARTMENT OF EDUCATION

Notice of Submission for OMB Review

AGENCY: Department of Education.

ACTION: Comment Request.

SUMMARY: The Director, Information Collection Clearance Division, Regulatory Information Management Services, Office of Management invites comments on the submission for OMB review as required by the Paperwork Reduction Act of 1995 (Pub. L. 104–13).

DATES: Interested persons are invited to submit comments on or before November 18, 2010.

ADDRESSES: Written comments should be addressed to the Office of Information and Regulatory Affairs, *Attention:* Education Desk Officer, Office of Management and Budget, 725 17th Street, NW., Room 10222, New Executive Office Building, Washington, DC 20503, be faxed to (202) 395–5806 or e-mailed to *oira_submission@omb.eop.gov* with a cc: To *ICDocketMgr@ed.gov.* Please note that written comments received in response to this notice will be considered public records.

SUPPLEMENTARY INFORMATION: Section 3506 of the Paperwork Reduction Act of 1995 (44 U.S.C. Chapter 35) requires that the Office of Management and Budget (OMB) provide interested Federal agencies and the public an early opportunity to comment on information collection requests. The OMB is particularly interested in comments which: (1) Evaluate whether the proposed collection of information is necessary for the proper performance of the functions of the agency, including whether the information will have practical utility; (2) Evaluate the accuracy of the agency's estimate of the burden of the proposed collection of information, including the validity of the methodology and assumptions used; (3) Enhance the quality, utility, and clarity of the information to be collected; and (4) Minimize the burden of the collection of information on those who are to respond, including through the use of appropriate automated, electronic, mechanical, or other technological collection techniques or other forms of information technology.

Dated: October 13, 2010.

Darrin A. King,

Director, Information Collection Clearance Division, Regulatory Information Management Services, Office of Management.

Institute of Education Sciences

Type of Review: Reinstatement.

Title of Collection: Schools and Staffing Survey (SASS 2011/12) Preliminary Field Activities 2010/11.

OMB Control Number: 1850–0598.

Agency Form Number(s): N/A.

Frequency of Responses: One time.

Affected Public: Businesses or other for-profit; Not-for-profit institutions; State, Local, or Tribal Government, State

Educational Agencies or Local Educational Agencies.

Total Estimated Number of Annual Responses: 18,503.

Total Estimated Annual Burden Hours: 886.

Abstract: The Schools and Staffing Survey (SASS) is an in-depth, nationally representative survey of first through twelfth grade public and private school teachers, principals, schools, library media centers, and school districts. For public school districts, principals, schools, teachers and school libraries, the survey estimates are state-representative. For private school principals, schools, and teachers, the survey estimates are representative of private school types. There are two additional components within SASS's 4-year data collection cycle: The Teacher Follow-up Survey and the Principal Follow-up Survey, which are conducted a year after the SASS main collection. SASS respondents include public and private school principals, teachers, and school and school district staff. Topics covered include characteristics of teachers, principals, schools, school libraries, teacher training opportunities, retention, retirement, hiring, and shortages. This submission for SASS 2011/12 requests OMB approval for preliminary field activities to take place prior to data collection in the fall of 2011, including (a) submitting SASS research applications to special districts that require prior research approval before their schools and a coordinator can be recruited for the study; (b) conducting a calling operation to verify whether a subset of districts are one-school districts and will require receiving a combined school- and district-level questionnaire; (c) contacting all of the remaining districts, asking whether they are willing to provide a Teacher Listing Form at a later time and to request email addresses for sampled school principals; and (d) mailing of a pre-contact letter to sample schools to verify the mailing address of the school and to notify the school about the upcoming data collection.

Requests for copies of the information collection submission for OMB review may be accessed from the RegInfo.gov Web site at *http://www.reginfo.gov/public/do/PRAMain* or from the Department's Web site at *http://edicsweb.ed.gov,* by selecting the "Browse Pending Collections" link and by clicking on link number 4376. When you access the information collection, click on "Download Attachments" to view. Written requests for information should be addressed to U.S. Department of Education, 400 Maryland Avenue, SW., LBJ, Washington, DC 20202–4537. Requests may also be electronically mailed to the Internet address *ICDocketMgr@ed.gov* or faxed to 202–401–0920. Please specify the complete title of the information collection and OMB Control Number when making your request.

Individuals who use a telecommunications device for the deaf (TDD) may call the Federal Information Relay Service (FIRS) at 1–800–877–8339.

[FR Doc. 2010–26290 Filed 10–18–10; 8:45 am]

BILLING CODE 4000–01–P

DEPARTMENT OF ENERGY

Revised Record of Decision for Offer of Conditional Commitment for a Loan Guarantee for, and Electrical Interconnection of, the Shepherds Flat Wind Project

AGENCY: U.S. Department of Energy (DOE), Loan Programs Office (LP) and Bonneville Power Administration (BPA).

ACTION: Revised Record of Decision (ROD).

SUMMARY: The U.S. Department of Energy announces its decisions to provide a conditional loan guarantee for, and interconnection to the Federal Columbia River Transmission System (FCRTS) of, the 846-megawatt (MW) Shepherds Flat Wind Project (Wind Project) in Gilliam and Morrow counties, Oregon. This ROD revises a previous BPA ROD approving the interconnection of the Wind Project to the FCRTS that was issued on July 18, 2008. The Revised ROD reflects the decisions with regard to the Wind Project for: The issuance by BPA of modified Large Generator Interconnection Agreements (LGIAs); and the offer by LP of a conditional commitment for a loan guarantee to Caithness Shepherds Flat, LLC (CSF) for construction of the Wind Project. The Revised ROD also addresses the division of the previously approved Wind Project into three separate projects, and the transfer of these projects to three separate subsidiaries of CSF that will result in additional turbines, adjustments of site boundaries and additional acreage.

FOR FURTHER INFORMATION CONTACT: Doug Corkran, Bonneville Power Administration, KEC–4, P.O. Box 3621, Portland, Oregon 97208–3621; toll-free telephone number 1–800–622–4519; fax number 503–230–5699; or e-mail *dfcorkran@bpa.gov;* and Matthew McMillen, Director, Environmental Compliance Division, Loan Programs Office (LP–1), U.S. Department of Energy, 1000 Independence Avenue, SW., Washington, DC 20585; telephone 202–586–7248; or e-mail *Matthew.McMillen@hq.doe.gov.* For general information about the DOE National Environmental Policy Act (NEPA) process contact Carol Borgstrom, Director, Office of NEPA Policy and Compliance (GC–54), U.S. Department of Energy, 1000 Independence Avenue, SW., Washington, DC 20585; telephone 202–586–4600; leave a message at 800–472–2756; or e-mail *AskNEPA@hq.doe.gov.* Information about DOE NEPA activities and access to many DOE NEPA documents are available through the DOE NEPA Web site at *http://www.nepa.energy.gov.*

ADDRESSES: Copies of the Revised ROD, the July 2008 ROD for the Electrical Interconnection of the Shepherds Flat Wind Project, the Business Plan Environmental Impact Statement and Business Plan ROD may be obtained by: (1) Calling the BPA toll-free document request line, 1–800–622–4520, (2) submitting a request to the BPA Public Information Center, P.O. Box 12999, Portland, Oregon 97212, or (3) accessing these documents on the BPA NEPA document Web site at *http://www.efw.bpa.gov/environmental_services/nepadocs.aspx.* The Revised ROD will also be posted on the DOE LP Web site at *http://www.lgprogram.energy.gov* and the DOE NEPA Web site at *http://www.nepa.energy.gov.*

SUPPLEMENTARY INFORMATION:

Introduction

On July 18, 2008, the BPA issued a ROD to interconnect the proposed Wind Project to the FCRTS (73 FR 43730, July 28, 2008). DOE, through its Loan Programs Office, and BPA, are issuing this Revised ROD to address actions by the project developers subsequent to the 2008 ROD: A loan guarantee application submitted to LP, and applications to BPA for Large Generator Interconnection Agreements related to the transfer of ownership of the Wind Project to three wholly owned subsidiaries. The Wind Project, as modified, has been approved by the Oregon Energy Facility Siting Council (EFSC).

As with the decision made by BPA for the originally proposed Wind Project, BPA and LP decisions concerning the revised Wind Project are consistent with and tiered to the BPA Business Plan Final Environmental Impact Statement (BP EIS) (DOE/EIS–0183, June 1995),

and the Business Plan Record of Decision (BP ROD, August 1995).

Background

The BPA, a power marketing administration within DOE, owns and operates most of the high-voltage electric transmission system in the Pacific Northwest. This system is known as the FCRTS. In 2004, CSF submitted a generator interconnection request to BPA to interconnect the proposed Wind Project to the FCRTS. In its July 2008 ROD, BPA decided to offer contract terms (called a Large Generator Interconnection Agreement [LGIA]) to CSF for interconnection of the Wind Project to the FCRTS.[1] Under this LGIA, up to 846 megawatts (MW) of power from the Wind Project will be interconnected at the existing Slatt Substation in Gilliam County, Oregon. To provide the interconnection, BPA is in the process of expanding its Slatt Substation to accommodate a 230-kilovolt (kV) yard and will provide transmission access for up to 846 MW from the Wind Project to the BPA 500-kV transmission system.[2]

In November 2009, CSF applied to DOE LP for a loan guarantee for the Wind Project. DOE established the LP in response to Title XVII of the Energy Policy Act of 2005 (42 U.S.C. 16511–16514), which authorizes the Secretary of Energy to make loan guarantees for projects that (1) avoid, reduce, or sequester air pollutants or anthropogenic emissions of greenhouse gases, and (2) employ new or significantly improved technologies as compared to commercial technologies in service in the United States at the time the guarantee is issued. Section 406 of the American Recovery and Reinvestment Act of 2009 (42 U.S.C. 16516; Recovery Act) amended Title XVII to create Section 1705 authorizing a new program for rapid deployment of renewable energy projects and related manufacturing facilities, and electric power transmission projects that commence construction no later than September 30, 2011. Section 1705 is designed to address national economic conditions, in part, through the advancement of renewable energy and transmission. CSF submitted its application for a loan guarantee in response to LP's solicitation, Financial Institution Partnership Program—Commercial Technology Renewable Energy Generation Projects, issued October 7, 2009.

Subsequent to issuance of the BPA July 2008 ROD originally approving the interconnection, CSF initiated certain changes to the originally proposed Wind Project. In May 2009, CSF transferred ownership and control of its Wind Project to three wholly owned subsidiaries of CSF—Horseshoe Bend Wind, LLC, South Hurlburt Wind, LLC, and North Hurlburt Wind, LLC. In June 2009, these CSF subsidiaries submitted a joint request to the Oregon Department of Energy (ODOE), which serves as the primary staff for the EFSC, to transfer the Site Certificate for the Wind Project to the subsidiaries under three separate site certificates and to divide the Wind Project into three separate facilities, as follows:

- Shepherds Flat South (SFS), to be constructed, owned, and operated by Horseshoe Bend Wind LLC
- Shepherds Flat Central (SFC), to be constructed, owned, and operated by South Hurlburt Wind LLC
- Shepherds Flat North (SFN), to be constructed, owned, and operated by North Hurlburt Wind LLC

In September 2009, the EFSC approved this request and issued three new site certificates to the three CSF subsidiaries. See *Final Order on Amendment #1—In the Matter of the Request for Amendment #1 of the Site Certificate for the Shepherds Flat Wind Farm* (available on the Web at *http://www.oregon.gov/ENERGY/SITING/decisions.shtml#SFWF091109*).

In November 2009, each of the CSF subsidiaries submitted a separate Request for Amendment of their respective Site Certificates to the ODOE to, among other things, incorporate their turbine selections, conform the overall project MW capacity to the authorized interconnection capacity, and revise the project boundaries for each of their wind projects. The ODOE and the EFSC evaluated and considered these requests, and the EFSC issued Final Orders approving the requests on March 12, 2010. See *Final Order on Amendment #1—In the Matter of the Request for Amendment #1 of the Site Certificate for Shepherds Flat South, Final Order on Amendment #1—In the Matter of the Request for Amendment #1 of the Site Certificate for Shepherds Flat Central, and Final Order on Amendment #1—In the Matter of the Request for Amendment #1 of the Site Certificate for Shepherds Flat North* (available at *http://www.oregon.gov/ENERGY/SITING/decisions.shtml#SFN031210*). The DOE has utilized the extensive project record developed by the EFSC to support these Final Orders and associated Amended Site Certificates in describing the environmental impacts presented in this Revised ROD.

The modifications to the Wind Project that have resulted from the changes in ownership and site certification, including the number of turbines and boundary changes, collectively referred to as the Modified Wind Project, are summarized below.

Concerning turbine selection, each CSF subsidiary has selected a 2.5–MW nameplate wind turbine generator for its portion of the Wind Project. The original Site Certificate contemplated a larger nameplate turbine (up to 3 MW), with up to 303 turbines installed. Based on the selected 2.5–MW turbine and the overall 846 MW of interconnect capacity, the EFSC Final Orders authorized an increase in the number of wind turbines to 338, which will be distributed among the three wind projects as follows:

Facility	Original turbines	Change in turbines	Revised total turbines	Nameplate rating	Facility capacity
SFS	120	−4	116	2.5 MW	290 MW
SFC	77	+ 39	116	2.5 MW	290 MW
SFN	106	0	106	2.5 MW	265 MW
Totals	303	+ 35	338		845 MW

The three CSF subsidiaries also have adjusted their respective site boundaries and turbine layouts to better accommodate each of their projects, as follows:

- Transferring approximately 2,413 acres originally approved for facility development from SFS to SFC;

[1] In July 2008, CSF received a Site Certificate from EFSC that authorized CSF to construct and operate the Wind Project.

[2] The BPA July 2008 ROD contains a full description of the interconnection and associated environmental considerations.

• Assigning a 1,290-acre transmission line corridor to be shared by the SFS and SFC facilities to SFS;

• Expanding the SFS facility to include an additional 4,855 acres not previously considered for development to better site the SFS facility's approved number of turbines and reducing the amount of access roads by 9.7 miles;

• Expanding the SFC facility to include an additional 2,421 acres not previously considered for development to better site the SFC facility's approved number of turbines and increasing the amount of access roads by 8 miles;

• Transferring approximately 1,152 acres originally approved for facility development from SFC to SFN and expanding the SFN facility to include an additional 15 acres not previously considered for development. The combined 1,167 acres added to SFN are intended to accommodate an alternative transmission line corridor (to the one considered in the 2008 ROD) that extends from the SFS substation to the SFC substation and then to the BPA substation, bypassing the SFN substation. Use of the alternative corridor would result in shorter transmission line runs and eliminate one crossing of an existing high-voltage power line and county road. SFN access roads would be decreased by 4 miles under the alternative corridor.

With these adjustments, the overall size of the project area has increased from approximately 22,390 acres to about 28,170 acres. However, only a very small portion of this expanded project area will actually be impacted by the increased project footprint resulting from the Modified Wind Project. As documented in the Amended Site Certificates, the area that will actually be occupied by permanent project facilities has increased from about 179.4 acres to 183.4 acres—an increase of about 4.0 acres in total. The rest of the expanded project area will remain in its current agricultural use and will not be affected by project facilities. Access roads for the Modified Wind Project will be reduced by 5.7 miles from the original project.

Public Process and Consideration of Comments

A public process conducted by the ODOE for the requested Site Certificate amendments provided opportunities for public comment. After the ODOE received these amendment requests from the three CSF subsidiaries, copies of the amendment requests were sent to a list of reviewing agencies on November 12, 2009, along with a memorandum from ODOE that requested submittal of any agency comments to the ODOE by December 11, 2009. On November 17, 2009, the ODOE sent notice of the amendment requests to all persons on the Oregon EFSC general mailing list, to persons on a mailing list specifically established for the proposed projects, and to an updated list of property owners supplied by the three CSF subsidiaries. This notice also requested submittal of any public comments to the ODOE by December 11, 2009.

On February 4, 2010, the ODOE issued Proposed Orders for each of the three projects that included recommended findings and the conclusion for each project. The ODOE mailed notice of the Proposed Orders to the same mailing lists described above and also posted this notice on the ODOE Web site. The notice invited public comments and set a deadline of March 8, 2010, for public comments or contested case requests. Comments were received on the SFS Proposed Order and on the SFC Proposed Order. No comments were received on the SFN Proposed Order.

The ODOE and EFSC considered public comments in preparing the Final Order approving the Site Certificate amendments. Comments included concerns about cumulative effects to wildlife, impacts to Washington ground squirrels, and the appropriate designation of habitat types within the new wind project boundaries; groundwater use and impacts to aquifers; impacts to scenic values; impacts from turbine noise; facility lighting concerns; and impacts to the Oregon Trail. A summary of all comments received and the ODOE responses are included in the appendices of the Final Orders for each of the three projects (see *http://www.oregon.gov/ENERGY/SITING/decisions.shtml#SFN031210*).

Discussion of Environmental Effects

As discussed in the BPA July 2008 ROD, BPA reviewed the BP EIS and BP ROD to determine whether offering terms to interconnect the Wind Project was adequately covered in the scope of the previous programmatic review. The BP EIS supports a number of BPA decisions concerning, among other things, the interconnection of proposed generation to the FCRTS. BPA determined that its decision clearly fell within the scope of the BP EIS and BP ROD. The BPA July 2008 ROD described the environmental impacts that would result from the BPA interconnection facilities, and summarized the environmental impacts resulting from the Wind Project. BPA also based its July 2008 ROD on project and environmental information that was considered by EFSC as part of its Site Certificate application process, and on EFSC's findings in its June 11, 2008 Proposed Order and Final Order dated July 25, 2008). EFSC, as the siting authority for the Wind Project, fully analyzes potential environmental impacts of its siting decisions, and specifies mitigation measures to minimize impacts to natural resources. BPA's July 2008 ROD used these findings and other information to assess the Wind Project's environmental impacts.

Through this Revised ROD, BPA and LP jointly determine that the BP EIS and BP ROD adequately cover additional BPA and LP actions and decisions related to the Modified Wind Project, and that these actions and decisions do not represent a significant change relevant to environmental considerations from the July 2008 ROD. BPA and LP reviewed the additional project and environmental information considered by EFSC for the Modified Wind Project, as well as the EFSC findings in the Final Orders for the new site certificates. The environmental analyses and findings by EFSC indicate that no significant impacts to natural resources (when compared to those already considered in the July 2008 ROD) will occur as a result of the Modified Wind Project. This Revised ROD has been developed by BPA and LP, in part, on the basis of the findings and the project record developed by EFSC.

BPA and LP also reviewed the BP EIS to ensure that the Modified Wind Project still fits within the environmentally preferred alternatives. In addition, BPA and LP considered the environmental benefits of energy from wind power, as opposed to fossil-fuel alternatives, and have determined those benefits to be substantial, particularly the avoidance of 1,215,991 tons of CO_2 emissions per year. Finally, in the process of developing this Revised ROD, BPA and LP reviewed the extensive environmentally protective measures included in the Wind Project Site Certificate as a result of the EFSC process. These protective measures apply to the Modified Wind Project and will reduce potential environmental impacts considerably. Based on this review, DOE believes the proposed Modified Wind Project is an environmentally preferable alternative to generation of the equal amount of electricity generated by conventional fossil-fuel sources.

Because the Wind Project is now divided into three separate wind facilities and owned by three separate

entities (the three CSF subsidiaries), BPA will modify its LGIA for the Wind Project by issuing three new LGIAs to replace the single LGIA it had previously issued. BPA issuance of three new LGIAs is strictly an administrative contract action to bring BPA agreements in alignment with the change in Wind Project parties that has been authorized by EFSC. BPA is not undertaking any activities beyond those considered in the July 2008 ROD, with the exception of placing some metering equipment at one additional customer substation. However, because this equipment will be placed within the boundaries of the substation, this activity will not cause a significant change in environmental effects already considered in the July 2008 ROD.

The LP offer of a conditional commitment for a loan guarantee to the developers of the Wind Project will not result in significant environmental impacts beyond those considered in the July 2008 ROD. The potential environmental impacts from development of the Wind Project by the CSF subsidiaries are considered to be a consequence of providing the loan guarantee, and these impacts have already been evaluated and considered through the July 2008 ROD, as modified by this Revised ROD.

The following section describes the environmental impacts associated with changes to the Wind Project that the CSF subsidiaries initiated after EFSC issued Wind Project Site Certificate in July 2008. EFSC approved these changes in its March 2010 Final Orders for the Modified Wind Project. This description of impacts is based on the EFSC environmental considerations and findings for the Modified Wind Project, as contained in the March 2010 Final Orders, associated Amended Site Certificates, and other parts of the EFSC project record.

Land Use and Recreation

While the overall size of the project area will increase from approximately 22,390 acres to about 28,170 acres, only a very small portion of the expanded project area will be affected by increased project footprint (*i.e.,* the land area that will be occupied by permanent structures) from the Modified Wind Project. The revised footprint areas that will be used for siting the Modified Wind Project facilities are currently in the same type of land use *(i.e.,* agricultural) as previously approved for the original Wind Project. About 136.5 acres in Gilliam County (up from 135.9 acres) and about 46.8 acres in Morrow County (up from 43.5 acres), for a total of 183.3 acres (originally 179.4 acres), will be removed from agricultural production for the wind turbines and associated facilities. This small increase (4.0 acres) in affected agricultural uses does not represent a significant change in impacts to land use. There are no designated recreational facilities or activities on the project site. The land is posted to prevent trespass and hunting. There will be no impacts to recreation from the project.

Transportation

The Modified Wind Project will reduce new access roads by 5.7 miles as compared with the original Wind Project. Because the type of access road will be the same as proposed originally and there is no change in the amount or mix of vehicles related to the Modified Wind Project, impacts to existing transportation infrastructure and traffic patterns are expected to be the same as considered in the July 2008 ROD.

Geology and Soils

The area of temporary and permanent disturbance to soils will increase with the Modified Wind Project. However, given the small change in disturbed area (4.0 acres), impacts to geology and soils will be similar to those of the originally proposed Wind Project.

Vegetation

Impacts to vegetation will increase with the construction of up to 35 additional turbines. However, impacts will be similar to those of the originally proposed Wind Project. After construction, all disturbed areas, except the areas needed for permanent facilities, will be restored with native grasses and shrubs or will be managed as cropland or rangeland.

Wetlands and Water Resources

Wetlands surveys were performed for the areas that have been added to the Modified Wind Project. No wetlands or water resources were documented that will be affected by any of the changes in the Wind Project.

Fish and Wildlife

Impacts to fish and wildlife will be similar to those of the originally proposed Wind Project. The new areas proposed for the alternative transmission line route and the boundary expansion of SFS and SFC contain wildlife habitat that is similar to the habitat in areas already considered. Surveys for sensitive species in the new lands did not identify any new populations. No new risks to sensitive species are anticipated from the changes in facility design.

The avian and bat cumulative impacts analysis in the July 2008 ROD was based on the siting of up to 303 turbines with a capacity up to 909 MW within the Wind Project area. The EFSC has authorized the CSF subsidiaries to increase the number of turbines to 338, but the maximum project capacity has been reduced to 845 MW. Mortality risk to bats and birds has been correlated to total MW, not to total numbers of turbines; thus, the impact analysis was based on regional potential new generation in MW. Because the Modified Wind Project will result in a decrease in installed MW, a proportional decrease in the cumulative risks to birds and bats from the Wind Project is expected.

State and Federal Threatened and Endangered Species

The following species with federal or state status are listed for Gilliam and Morrow counties:

Species	Federal Status	State status
Greater sage-grouse (*Centrocercus urophasianus*)	Candidate	State Sensitive—Vulnerable.
Bald eagle (*Haliaeetus leucocephalus)*	None	Threatened.
Washington ground squirrel (*Spermophilus washingtoni*)	Candidate	Endangered.
Canada lynx (*Lynx canadensis*)	Threatened	None.
Gray wolf (*Canis lupus*)	Endangered	Endangered.
Grizzly bear (*Ursus arctos horribilis*)	Threatened	None.
Chinook salmon (*Oncorhynchus tshawytscha*)	Threatened	Threatened.
Steelhead (*Oncorhynchus mykiss*)	Threatened	State Sensitive—Vulnerable.
Sockeye salmon (*Oncorhynchus nerka*)	Endangered	None.

Sage-grouse—The historic distribution of the greater sage-grouse includes Gilliam County; however there are no records of current detections in either Morrow or Gilliam county and there were no observations of this species recorded during the on-site wildlife surveys in the new areas. There is little suitable sage-grouse habitat within the site boundaries. The Modified Wind Project will not cause any impacts to sage-grouse, because habitat for the species is lacking in the project areas and no sage-grouse have been observed in or near the project areas.

Bald Eagle—Bald eagles winter along the Columbia River north of the project area. Based on the limited use of the facility site by bald eagles and the mitigation measures included in the Site Certificate for the Modified Wind Project, changes to the project are not likely to result in greater risk to bald eagles than originally analyzed.

Washington Ground Squirrel—No active Washington ground squirrel colonies were found within the areas that have been added to the Modified Wind Project. Three potential use sites might have previously been occupied but were not at the time of the surveys. These sites are in ravines where wind turbines will not be placed. Accordingly, project changes will not result in impacts not already considered to Washington ground squirrels.

Canada Lynx, Gray Wolf, and Grizzly Bear—Although the historic distribution of these three species includes Gilliam and Morrow counties, they are now extremely rare or non-existent in Oregon. There are no recent recorded detections of these species in either Morrow or Gilliam county, and these species were not observed during on-site wildlife surveys. No designated critical habitat for these species is present in or near the project area. Because these species are not present in or near the project areas, the Modified Wind Project will have no effect on Canada lynx, gray wolf, or grizzly bear.

Fish—The three listed fish species in the analysis area are anadromous species that travel the Columbia River north of the facility site. The fish might be present in Morrow and Gilliam counties, but there are no perennial streams within the site boundaries that can support these species. Facility construction will not consume water from any streams that function as habitat for these species.

Historic/Archaeological Resources

Modified Wind Project developers will complete cultural resource surveys on all new areas of disturbance not included as part of the originally proposed Wind Project, and any cultural resources will be avoided or mitigated as described in the EFSC Site Certificate. ODOE staff contacted the Oregon State Historic Preservation Officer about the most recent EFSC amendments, but the Officer did not respond with any supplemental comments.

Visual Quality

The revision to lands authorized for wind turbine siting and the addition of 35 turbines to the SFS area will change the configuration of turbines from that originally considered, but will not change the overall visual impacts associated with the original facility layout.

Noise

Overall, impacts from construction noise are not expected to change from the originally proposed Wind Project, because roughly the same number of wind turbines will be constructed in approximately the same area. However, the reconfiguration of turbine locations could temporarily increase noise levels during construction in areas with a greater concentration of turbines than previously expected. Due to the lack of sensitive noise receptors and the temporary nature of this type of noise, impacts will be the same as described for the original Wind Project even with this change. Operation of the additional wind turbines will comply with applicable state and county noise-control regulations; therefore, impacts from operations noise will be similar to those of the originally proposed Wind Project.

Public Health and Safety

Impacts to public health and safety, such as fire risk and hazardous materials, will not change from those described for the originally proposed wind farm. Electromagnetic fields (EMF) will increase in certain areas where new turbines will be constructed. There have been numerous studies on the potential health effects from EMF; however these studies remain inconclusive, showing no or weak associations with effects on health.[3] Therefore, the Modified Wind Project is not expected to result in any different public health and safety impacts from the originally proposed Wind Project.

In April 2010, the Federal Aviation Administration (FAA) and the Department of Defense (DoD) raised the potential impact of Wind Project turbines on a nearby radar installation in Oregon. DoD objected to a Determination of No Hazard proposed by FAA pursuant to Federal Aviation Regulations (FAR) 14 CFR part 77, Objects Affecting Navigable Airspace. DoD subsequently analyzed this issue and DoD removed its objection. Consequently, the FAA issued a Determination of No Hazard for Modified Wind Project turbines on April 30, 2010.

Socioeconomics and Public Services

Because the Modified Wind Project will largely consist of the same types of facilities in the same general area as originally proposed, potential impacts to socioeconomics and public services are expected to be similar. However, the additional turbines included in the Modified Wind Project will provide additional lease payments and other local revenues compared to the originally proposed Wind Project. In addition, the additional turbines that will be constructed likely would lengthen the construction period. Although this increase in the construction period is expected to be very slight, there could be a corresponding increase in indirect economic benefits to area businesses from construction workers purchasing more goods and services in Gilliam and Morrow counties. However, this increase will not be substantially more than the impacts from the originally proposed Wind Project.

Air Quality

By increasing the number of wind turbines, the Modified Wind Project could result in a temporary increase in the amount of fugitive dust emissions associated with construction activities. This increase will be minor and short term. The mitigation included in the EFSC Site Certificate will minimize these temporary impacts to levels similar to the originally proposed Wind Project. Other air quality impacts will be the same as those described in the original Site Certificate for the Wind Project.

Greenhouse Gases

While the scientific understanding of climate change continues to evolve, the Intergovernmental Panel on Climate Change (IPCC) Fourth Assessment Report stated that warming of Earth's

[3] Minnesota Department of Health, [undated]. Electric and Magnetic Fields, Frequently Asked Questions, Web site: *http://www.health.state.mn.us/divs/eh/radiation/emf/#risks,* accessed December 5, 2005.

National Institute of Environmental Health Sciences and National Institutes of Health, 2002. EMF Electric and Magnetic Fields Associated with the Use of Electric Power. June. Web site: *http://www.doh.wa.gov/ehp/rp/xray/emf202.pdf,* assessed December 5, 2005.

climate is unequivocal, and that warming is very likely attributable to increases in atmospheric greenhouse gases (GHGs) caused by human activities (anthropogenic).[4] The release of anthropogenic GHGs and their potential contribution to global warming are inherently cumulative phenomena. The Fourth Assessment Report indicates that changes in many physical and biological systems, such as increases in global temperatures, more frequent heat waves, rising sea levels, coastal flooding, loss of wildlife habitat, spread of infectious disease, and other potential environmental impacts are linked to changes in the climate system, and that some changes could be irreversible. GHGs, which include carbon dioxide (CO_2), methane (CH_4), and nitrous oxide (N^2O), are chemical compounds in the Earth's atmosphere that trap heat. Of these gases, CO_2 is recognized by the IPCC as the primary GHG affecting climate change. Present atmospheric concentrations of CO_2 are believed to be higher than at any time in at least the last 650,000 years, primarily as a result of combustion of fossil fuels. It is also very likely that observed increases in CH_4 are partially due to fossil fuel use, according to the IPCC Report.

The energy produced by the Modified Wind Project facilities would be free of both GHG emissions and other air pollutants. The project would generate electrical power from a renewable source of energy (wind) representing an alternative to carbon-emitting fossil fuels. Accordingly, as compared with regional electrical generation mix, the project will avoid 1,215,991 tons of CO_2 per year, equivalent to the annual greenhouse gas emissions of 212,141 passenger vehicles. Nonetheless, the project would unavoidably produce some greenhouse gas emissions through activities such as project construction and transportation. These emissions would be extremely small compared to the 8,026 million tons of CO_2-equivalent greenhouse gases emitted in the U.S. in 2007,[5] and the 54 billion tons of CO_2-equivalent anthropogenic greenhouse gases emitted globally in 2004. However, emissions from the proposed action in combination with past and future emissions from all other sources would contribute incrementally to the climate change impacts described above.

[4] Intergovernmental Panel on Climate Change, Fourth Assessment Report, Climate Change 2007: Synthesis Report, Summary for Policy Makers, released in Valencia, Spain, November 17,2007.

[5] Energy Information Administration Report No. DOE/EIA 0573 (2007).

Conclusion

The DOE LP has decided to offer a conditional commitment/term sheet for a loan guarantee to CSF for the Modified Wind Project, consisting of the SFN, SFC, and SFS wind farms. When and if all of the terms and conditions specified in the conditional commitment have been met, DOE and the Applicant may enter into a Loan Guarantee Agreement for the Modified Wind Project. To conform with the changes to the Wind Project Site Certificate authorized by the EFSC, the BPA will issue three separate LGIAs for the SFN, SFC, and SFS wind farms to replace the single LGIA it had previously issued for the Wind Project. As relevant to environmental concerns, these decisions are consistent with the BP EIS and BP ROD. The July 2008 ROD for the Wind Project thus is revised by this ROD to include these additional decisions concerning the Modified Wind Project.

Issued in Portland, Oregon; Issued in Washington, DC.

Dated: September 24, 2010.

Stephen J. Wright,

Administrator and Chief Executive Officer, Bonneville Power Administration.

Dated: October 12, 2010.

Jonathan M. Silver,

Executive Director, Loan Programs Office.

[FR Doc. 2010–26229 Filed 10–18–10; 8:45 am]

BILLING CODE 6450–01–P

DEPARTMENT OF ENERGY

Federal Energy Regulatory Commission

[Docket No. IC11–537–000]

Commission Information Collection Activities (FERC–537); Comment Request; Extension

October 8, 2010.

AGENCY: Federal Energy Regulatory Commission.

ACTION: Notice of proposed information collection and request for comments.

SUMMARY: In compliance with the requirements of section 3506(c)(2)(A) of the Paperwork Reduction Act of 1995, 44 U.S.C. 3506(c)(2)(A) (2006), (Pub. L. 104–13), the Federal Energy Regulatory Commission (Commission or FERC) is soliciting public comment on the proposed information collection described below.

DATES: Comments in consideration of the collection of information are due December 20, 2010.

ADDRESSES: Comments may be filed either electronically (eFiled) or in paper format, and should refer to Docket No. IC11–537–000. Documents must be prepared in an acceptable filing format and in compliance with Commission submission guidelines at *http://www.ferc.gov/help/submission-guide.asp.* eFiling instructions are available at: *http://www.ferc.gov/docs-filing/efiling.asp.* First time users must follow eRegister instructions at: *http://www.ferc.gov/docs-filing/eregistration.asp,* to establish a user name and password before eFiling. The Commission will send an automatic acknowledgement to the sender's e-mail address upon receipt of eFiled comments. Commenters making an eFiling should not make a paper filing. Commenters that are not able to file electronically must send an original of their comments to: Federal Energy Regulatory Commission, Secretary of the Commission, 888 First Street, NE., Washington, DC 20426.

Users interested in receiving automatic notification of activity in this docket may do so through eSubscription at *http://www.ferc.gov/docs-filing/esubscription.asp.* In addition, all comments and FERC issuances may be viewed, printed or downloaded remotely through FERC's eLibrary at *http://www.ferc.gov/docs-filing/elibrary.asp,* by searching on Docket No. IC11–537. For user assistance, contact FERC Online Support by e-mail at *ferconlinesupport@ferc.gov,* or by phone at: (866) 208–3676 (toll-free), or (202) 502–8659 for TTY.

FOR FURTHER INFORMATION: Ellen Brown may be reached by e-mail at *DataClearance@FERC.gov,* telephone at (202) 502–8663, and fax at (202) 273–0873.

SUPPLEMENTARY INFORMATION: The information collected under the requirements of FERC–537, "Gas Pipeline Certificates: Construction, Acquisition, and Abandonment" (OMB Control No. 1902–0060), is used by the Commission to implement the statutory provisions of the Natural Gas Policy Act of 1978 (NGPA), 15 U.S.C. 3301–3432, and the Natural Gas Act (NGA) (15 U.S.C. 717–717w). Under the NGA, natural gas pipeline companies must obtain Commission authorization to undertake the construction or extension of any facilities, or to acquire or operate any such facilities or extensions in accordance with Section 7(c) of the NGA. A natural gas company must also obtain Commission approval under Section 7(b) of the NGA prior to abandoning any jurisdictional facility or service. Under the NGA and the NGPA, interstate and intrastate pipelines must also obtain authorization for certain

transportation and storage services and arrangements, particularly a Part 284, Subpart G—Blanket Certificate (18 CFR 284.8).

The information collected is necessary to certificate interstate pipelines engaged in the transportation and sale of natural gas, and the construction, acquisition, and operation of facilities to be used in those activities, to authorize the abandonment of facilities and services, and to authorize certain NGPA transactions. If a certificate is granted, the natural gas company can construct, acquire, or operate facilities, plus engage in interstate transportation or sale of natural gas. Conversely, approval of an abandonment application permits the pipeline to cease service and/or discontinue the operation of such facilities. Authorization under NGPA Section 311(a) allows the interstate or intrastate pipeline applicants to render certain transportation services.

The data required to be submitted consists of identification of the company and responsible officials, factors considered in the location of the facilities and the detailed impact on the project area for environmental considerations. Also to be submitted are the following:

- Flow diagrams showing proposed design capacity for engineering design verification and safety determination;
- Commercial and economic data presenting the basis for the proposed action; and
- Cost of the proposed facilities, plans for financing, and estimated revenues and expenses related to the proposed facility for accounting and financial evaluation.

The Commission implements these filing requirements in the Code of Federal Regulations (CFR) under 18 CFR 157.5–.11; 157.13–.20; 157.53; 157.201–.209; 157.211; 157.214–.218; 284.8; 284.11; 284.126; 284.221; 284.224.[1]

Action: The Commission is requesting a three-year extension of the FERC–537 reporting requirements.

Burden Statement: The following table shows the current total burden estimate. Because the nature of the various filings that are covered by FERC–537 are so varied, a table has been included as an Appendix to this Notice to give a more detailed description of the various elements of this burden estimate:

FERC data collection	No. of respondents (1)	Average No. of responses per respondent[2] (2)	Average burden hours per response[3] (3)	Total annual burden hours (1) × (2) × (3)
FERC–537	225	3.44	133	102,942

The total estimated annual cost burden to respondents is $6,823,570 (102,942 hours/2,080 hours[4] per year, times $137,874[5]).

The reporting burden includes the total time, effort, or financial resources expended to generate, maintain, retain, disclose, or provide the information including: (1) Reviewing instructions; (2) developing, acquiring, installing, and utilizing technology and systems for the purposes of collecting, validating, verifying, processing, maintaining, disclosing and providing information; (3) adjusting the existing ways to comply with any previously applicable instructions and requirements; (4) training personnel to respond to a collection of information; (5) searching data sources; (6) completing and reviewing the collection of information; and (7) transmitting or otherwise disclosing the information.

The estimate of cost for respondents is based upon salaries for professional and clerical support, as well as direct and indirect overhead costs. Direct costs include all costs directly attributable to providing this information, such as administrative costs and the cost for information technology. Indirect or overhead costs are costs incurred by an organization in support of its mission. These costs apply to activities which benefit the whole organization rather than any one particular function or activity.

Comments are invited on: (1) Whether the proposed collection of information is necessary for the proper performance of the functions of the Commission, including whether the information will have practical utility; (2) the accuracy of the agency's estimate of the burden of the proposed collection of information, including the validity of the methodology and assumptions used; (3) ways to enhance the quality, utility and clarity of the information to be collected; and (4) ways to minimize the burden of the collection of information on those who are to respond, including the use of appropriate automated, electronic, mechanical, or other technological collection techniques or other forms of information technology, *e.g.* permitting electronic submission of responses.

Kimberly D. Bose,

Secretary.

Appendix

DETAILS FOR FERC–537, "GAS PIPELINE CERTIFICATES: CONSTRUCTION, ACQUISITION, AND ABANDONMENT"

[Based on Fiscal Year 2010 information and records]

Regulation section 18 CFR	Regulation topic	Number of respondents	Number of filings or responses	Avg. hours to prepare a filing or application
157.5–.11; & 157.13–.20	Interstate certificate and abandonment applications	75 companies (25 different)	82	500
157.53	Exemptions.		10	100

[1] Sections 284.223 and 284.227 have been removed from this Notice since they have no reporting or records burden.

[2] From Appendix: No. of Filings/No. of Respondents, or 775/225 = 3.44.

[3] A weighted average based on the information provided in the Appendix to this Notice.

[4] Estimated number of hours an employee works each year.

[5] Estimated average annual cost per employee.

DETAILS FOR FERC–537, "GAS PIPELINE CERTIFICATES: CONSTRUCTION, ACQUISITION, AND ABANDONMENT"—Continued

[Based on Fiscal Year 2010 information and records]

Regulation section 18 CFR	Regulation topic	Number of respondents	Number of filings or responses	Avg. hours to prepare a filing or application
157.201–.209; 157.211; 157.214–.218.	Blanket Certificates prior notice filings.		45	200
157.201–.209; 157.211; 157.214–.218.	Blanket Certificates—annual reports	145 companies (145 different)	336	50
284.11	NGPA Sec. 311 Construction—annual reports.			
284.8	Capacity Release—record keeping	168	168	75
284.126 (a) & (c)	Intrastate bypass, semi annual transportation & storage—reports.	50 companies (50 different)	100	30
284.221	Blanket Certificates—one time filing, inc. new tariff and rate design proposal.	20	20	100
284.224	Hinshaw Blanket Certificates—	2 (2 different)	2	75
157.5–.11; & 157.13–.20;	Non-facility certificate or abandonment applications	9 (3 different)	12	75
Totals		225 different	775	133 average, weighted.

[FR Doc. 2010–26240 Filed 10–18–10; 8:45 am]

BILLING CODE 6717–01–P

DEPARTMENT OF ENERGY

Federal Energy Regulatory Commission

[Project Nos. 2558–030; 2445–023; 2558–029; 2445–023; 2558–029]

Vermont Marble Power, Division of Omya Inc.; Central Vermont Public Service Corporation; Notice of Application of Transfer of Licenses, Substitution of Relicense Applicant, and Soliciting Comments and Motions To Intervene

October 12, 2010.

On August 31, 2010, Vermont Marble Power, Division of Omya Inc. (transferor) and Central Vermont Public Service Corporation (transferee) filed an application for the transfer of licenses for the Otter Creek Hydroelectric Project No. 2558, and the Center Rutland Project No. 2445, located on the Otter Creek in Addison and Rutland Counties, Vermont. On October 8, 2010, the transferor and transferee filed a joint request to substitute the transferee for the transferor as the applicant in the pending application for a new license filed by the transferor in Project No. 2558–029.

The transfer application was filed within five years of the expiration of the license for Project No. 2558, which is the subject of pending relicensing applications. In *Hydroelectric Relicensing Regulations Under the Federal Power Act* (54 *FR* 23,756 *FERC Stats. and Regs., Regs. Preambles* 1986–1990 30,854 at p. 31,437), the Commission declined to forbid all license transfers during the last five years of an existing license, and instead indicated that it would scrutinize all such transfer requests to determine if the transferor's primary purpose was to give the transferee an advantage in relicensing.

Applicant Contacts: For transferor: Todd Allard, Operations Engineer Omya, Inc., Vermont Marble Power, 9987 Carver Road, Suite 300, Cincinnati, OH 45252, (513) 387–4344. Andrew D. Qua, Project Manager, Klienschmidt Associates, 75 Main Street, P.O. Box 576, Pittsfield, ME 04967, (207) 487–3328. *For transferee:* Dale A. Rocheleau, Esq., Senior Vice President, General Counsel and Corporate Secretary, 77 Grove Street, Rutland, VT 05701–3400, (802) 747–5355.

FERC Contact: Kim Carter (202) 502–6486.

Deadline for filing comments and motions to intervene: 30 days from the issuance date of this notice. Comments and motions to intervene may be filed electronically via the Internet. *See* 18 CFR 385.2001(a)(1) and the instructions on the Commission's Web site under *http://www.ferc.gov/docs-filing/efiling.asp.* Commenters can submit brief comments up to 6,000 characters, without prior registration, using the eComment system at *http://www.ferc.gov/docs-filing/ecomment.asp.* You must include your name and contact information at the end of your comments. If unable to be filed electronically, documents may be paper-filed. To paper-file, an original plus seven copies should be mailed to: Kimberly D. Bose, Secretary, Federal Energy Regulatory Commission, 888 First Street, NE., Washington, DC 20426. More information about this project can be viewed or printed on the eLibrary link of Commission's Web site at *http://www.ferc.gov/docs-filing/elibrary.asp.* Enter the docket number (P–2558, P–2445) in the docket number field to access the document. For assistance, call toll-free 1–866–208–3372.

Kimberly D. Bose,

Secretary.

[FR Doc. 2010–26244 Filed 10–18–10; 8:45 am]

BILLING CODE 6717–01–P

DEPARTMENT OF ENERGY

Federal Energy Regulatory Commission

[Docket No. PF10–23–000]

Tennessee Gas Pipeline Company; Notice of Intent To Prepare an Environmental Assessment for the Planned Northeast Upgrade Project, Request for Comments on Environmental Issues, and Notice of Public Scoping Meetings

October 8, 2010.

The staff of the Federal Energy Regulatory Commission (FERC or Commission) will prepare an environmental assessment (EA) that will discuss the environmental impacts of the Northeast Upgrade Project involving construction and operation of facilities by Tennessee Gas Pipeline Company

(TGP) in northeastern Pennsylvania northern New Jersey. This EA will be used by the Commission in its decision-making process to determine whether the project is in the public convenience and necessity.

This notice announces the opening of the scoping process the Commission will use to gather input from the public and interested agencies on the project. Your input will help the Commission staff determine what issues need to be evaluated in the EA. Please note that the scoping period will close on November 12, 2010.

Comments may be submitted in written form or verbally. Further details on how to submit written comments are provided in the Public Participation section of this notice. In lieu of or in addition to sending written comments, you are invited to attend the public scoping meetings listed below.

Date and Time	*Location*
Monday, November 1, 2010 7 p.m. EDT	Eleanor G. Hewitt Elementary School Gymnasium, 266 Sloatsburg Road, Ringwood, NJ 07456.
Wednesday, November 3, 2010 7 p.m. EDT	Delaware Valley High School Auditorium, 252 Routes 6 & 209, Milford, PA 18337.
Thursday, November 4, 2010 7 p.m. EDT	Wyalusing Valley Junior and Senior High School Auditorium, 11364 Wyalusing New Albany Road, Wyalusing, PA 18853.

This notice is being sent to the Commission's current environmental mailing list for this project. State and local government representatives are asked to notify their constituents of this planned project and encourage them to comment on their areas of concern.

If you are a landowner receiving this notice, you may be contacted by a pipeline company representative about the acquisition of an easement to construct, operate, and maintain the planned facilities. The company would seek to negotiate a mutually acceptable agreement. However, if the project is approved by the Commission, that approval conveys with it the right of eminent domain. Therefore, if easement negotiations fail to produce an agreement, the pipeline company could initiate condemnation proceedings where compensation would be determined in accordance with Federal or state law.

A fact sheet prepared by the FERC entitled "An Interstate Natural Gas Facility On My Land? What Do I Need To Know?" is available for viewing on the FERC Web site (*http://www.ferc.gov*). This fact sheet addresses a number of typically asked questions, including the use of eminent domain and how to participate in the Commission's proceedings.

Summary of the Planned Project

TGP has announced its intention to build approximately 37 miles of 30-inch-diameter natural gas pipeline in five loop [1] segments and other facilities in New Jersey and Pennsylvania. The project would increase natural gas transmission capacity to the northeast region of the United States by about 636,000 dekatherms per day and would provide access to natural gas supplies in the Marcellus Shale supply area. The project would not, however, involve facilities necessary to produce natural gas from the Marcellus Shale. TGP has signed binding precedent agreements with two shippers for all of the project's additional firm transportation capacity.

The Northeast Upgrade Project would consist of the following components:

1. *Installation of five pipeline loop segments:*

- Loop 317—Installation of 5.4 miles of 30-inch-diameter pipeline loop in Bradford County, Pennsylvania.
- Loop 319—Installation of 2.0 miles of 30-inch-diameter pipeline loop in Bradford County, Pennsylvania.
- Loop 321—Installation of 8.0 miles of 30-inch-diameter pipeline loop in Wayne and Pike Counties, Pennsylvania.
- Loop 323—Installation of 14.0 miles of 30-inch-diameter pipeline loop in Pike County, Pennsylvania and Sussex County, New Jersey.
- Loop 325—Installation of 7.7 miles of 30-inch-diameter pipeline loop in Passaic and Bergen Counties, New Jersey.

2. *Modifications at four existing compressor stations:*

- *Compressor Station 319*—An inlet gas filter-separator, a blowdown silencer, and a relief valve would be installed and unit piping would be modified at the existing compressor station in Wyalusing Township, Bradford County, Pennsylvania.
- *Compressor Station 321*—Approximately 10,310 horsepower (hp) of additional compression would be installed at the existing compressor station in Clifford Township, Susquehanna County, Pennsylvania. An inlet gas filter-separator, a blowdown silencer, and a relief valve would also be installed.
- *Compressor Station 323*—Approximately 10,310 hp of additional compression would be installed at the existing compressor station in Lackawaxen Township, Pike County, Pennsylvania. An existing compressor unit would be restaged, unit piping would be modified, and an inlet gas filter-separator, a blowdown silencer, and a relief valve would also be installed.
- *Compressor Station 325*—An inlet gas filter-separator, a blowdown silencer, and a relief valve would be installed at the existing compressor station in Wantage Township, Sussex County, New Jersey.

3. Construction or modification of other aboveground facilities including one meter station, two pig [2] receivers, three mainline block valves, and other appurtenant facilities.

The general location of the project facilities is shown in appendix 1.[3]

Land Requirements for Construction

TGP is still in the planning phase for the Northeast Upgrade Project, and workspace requirements have not been finalized at this time. As currently planned, construction would disturb approximately 638 acres of land for the aboveground facilities and the pipeline. Following construction, about 112 acres would be maintained for permanent operation of the project facilities. The remaining acreage would be restored and allowed to revert to former uses. As planned, the new pipeline loops would primarily be installed adjacent to TGP's existing pipeline system.

[1] A pipeline loop is constructed parallel to an existing pipeline to increase capacity.

[2] A pig is a tool that is inserted into and moves through the pipeline, and can be used to clean and/or dry the pipeline, for internal inspection, or other purposes.

[3] The appendices referenced in this notice are not being printed in the **Federal Register**. Copies of appendices were sent to all those receiving this notice in the mail and are available at *http://www.ferc.gov* using the link called "eLibrary" or from the Commission's Public Reference Room, 888 First Street, NE., Washington, DC 20426, or call (202) 502–8371. For instructions on connecting to eLibrary, refer to the last page of this notice.

The EA Process

The National Environmental Policy Act (NEPA) requires the Commission to take into account the environmental impacts that could result from an action whenever it considers the issuance of a Certificate of Public Convenience and Necessity. NEPA also requires us[4] to discover and address concerns the public may have about proposals. This process is referred to as scoping. The main goal of the scoping process is to focus the analysis in the EA on the important environmental issues. By this notice, the Commission requests public comments on the scope of the issues to address in the EA. All comments received will be considered during the preparation of the EA.

In the EA we will discuss impacts that could occur as a result of the construction and operation of the planned project under these general headings:

- Geology and soils;
- Water resources, fisheries, and wetlands;
- Vegetation, wildlife, and endangered and threatened species;
- Cultural resources;
- Land use and cumulative impacts;
- Air quality and noise; and
- Public safety.

We will also evaluate reasonable alternatives to the planned project or portions of the project, and make recommendations on how to lessen or avoid impacts on the various resource areas.

Although no formal application has been filed, we have already initiated our NEPA review under the Commission's pre-filing process. The purpose of the pre-filing process is to encourage early involvement of interested stakeholders and to identify and resolve issues before an application is filed with the FERC. As part of our pre-filing review, we have begun to contact some Federal and state agencies to discuss their involvement in the scoping process and the preparation of the EA.

Our independent analysis of the issues will be presented in the EA. The EA will be placed in the public record and, depending on the comments received during the scoping process, may be published and distributed to the public. A comment period will be allotted if the EA is published for review. We will consider all comments on the EA before we make our recommendations to the Commission. To ensure your comments are considered, please carefully follow the instructions in the Public Participation section beginning on page 6.

With this notice, we are asking agencies with jurisdiction and/or special expertise with respect to environmental issues to formally cooperate with us in the preparation of the EA. These agencies may choose to participate once they have evaluated the proposal relative to their responsibilities. Agencies that would like to request cooperating agency status should follow the instructions for filing comments provided under the Public Participation section of this notice.

Consultations Under Section 106 of the National Historic Preservation Act

In accordance with the Advisory Council on Historic Preservation's implementing regulations for section 106 of the National Historic Preservation Act, we are using this notice to initiate consultation with applicable State Historic Preservation Offices (SHPO), and to solicit their views and those of other government agencies, interested Indian tribes, and the public on the project's potential effects on historic properties.[5] We will define the project-specific Area of Potential Effects (APE) in consultation with the SHPOs as the project is further developed. On natural gas facility projects, the APE at a minimum encompasses all areas subject to ground disturbance (examples include construction right-of-way, contractor/pipe storage yards, compressor stations, and access roads). Our EA for this project will document our findings on the impacts on historic properties and summarize the status of consultations under section 106.

Currently Identified Environmental Issues

We have already identified several issues that we think deserve attention based on a preliminary review of the planned facilities and the environmental information provided by TGP. This preliminary list of issues may be changed based on your comments and our analysis:

- Route alternatives on and near the Delaware Water Gap National Recreation Area in Pike County, Pennsylvania and Sussex County, New Jersey;
- Crossing the Appalachian Trail in Sussex County, New Jersey;
- Crossing the Susquehanna River in Bradford County, Pennsylvania; and
- Crossing the New Jersey Highlands in Passaic and Bergen Counties, New Jersey.

Public Participation

You can make a difference by providing us with your specific comments or concerns about the project. Your comments should focus on the potential environmental effects, reasonable alternatives, and measures to avoid or lessen environmental impacts. The more specific your comments, the more useful they will be. To ensure that your comments are timely and properly recorded, please send your comments so that they will be received in Washington, DC on or before **November 12, 2010**.

For your convenience, there are four methods you can use to submit your comments to the Commission. In all instances, please reference the project docket number (PF10–23–000) with your submission. The Commission encourages electronic filing of comments and has expert eFiling staff available to assist you at (202) 502–8258 or *efiling@ferc.gov*.

1. You may file your comments electronically by using the eComment feature, which is located on the Commission's Web site at *http://www.ferc.gov* under the link to Documents and Filings. An eComment is an easy method for interested persons to submit brief, text-only comments on a project;

2. You may file your comments electronically by using the eFiling feature, which is located on the Commission's Web site at *http://www.ferc.gov* under the link to Documents and Filings. With eFiling, you can provide comments in a variety of formats by attaching them as a file with your submission. New eFiling users must first create an account by clicking on "eRegister." You will be asked to select the type of filing you are making. A comment on a particular project is considered a "Comment on a Filing";

3. You may attend and provide either oral or written comments at a public scoping meeting. A transcript of each meeting will be made so that your comments will be accurately recorded and included in the public record; or

4. You may file a paper copy of your comments at the following address: Kimberly D. Bose, Secretary, Federal Energy Regulatory Commission, 888 First Street NE., Room 1A, Washington, DC 20426.

[4] "Us," "we," and "our" refer to the environmental staff of the Commission's Office of Energy Projects.

[5] The Advisory Council on Historic Preservation's regulations are at Title 36 of the Code of Federal Regulations, part 800. Historic properties are defined in those regulations as any prehistoric or historic district, site, building, structure, or object included in or eligible for inclusion in the National Register for Historic Places.

Environmental Mailing List

The environmental mailing list includes federal, state, and local government representatives and agencies; elected officials; environmental and public interest groups; Native American Tribes; other interested parties; and local libraries and newspapers. This list also includes all affected landowners (as defined in the Commission's regulations) who are potential right-of-way grantors, whose property may be used temporarily for project purposes, or who own homes within certain distances of aboveground facilities, and anyone who submits comments on the project. We will update the environmental mailing list as the analysis proceeds to ensure that we send the information related to this environmental review to all individuals, organizations, and government entities interested in and/or potentially affected by the planned project.

If the EA is published for distribution, copies will be sent to the environmental mailing list for public review and comment. If you would prefer to receive a paper copy of the document instead of the CD version, or would like to remove your name from the mailing list, please return the attached Information Request (appendix 2).

Becoming an Intervenor

Once TGP files its application with the Commission, you may want to become an "intervenor" which is an official party to the Commission's proceeding. Intervenors play a more formal role in the process and are able to file briefs, appear at hearings, and be heard by the courts if they choose to appeal the Commission's final ruling. An intervenor formally participates in the proceeding by filing a request to intervene. Instructions for becoming an intervenor are included in the User's Guide under the "e-filing" link on the Commission's Web site. Please note that the Commission will not accept requests for intervenor status at this time. You must wait until a formal application for the project is filed with the Commission.

Additional Information

Additional information about the project is available from the Commission's Office of External Affairs, at **(866) 208–FERC,** or on the FERC Web site (*http://www.ferc.gov*) using the eLibrary link. Click on the eLibrary link, click on "General Search" and enter the docket number, excluding the last three digits in the Docket Number field (*i.e.,* PF10–23). Be sure you have selected an appropriate date range. For assistance, please contact FERC Online Support at *FercOnlineSupport@ferc.gov* or toll free at (866) 208–3676, or for TTY, contact (202) 502–8659. The eLibrary link also provides access to the text of formal documents issued by the Commission, such as orders, notices, and rulemakings.

In addition, the Commission offers a free service called eSubscription which allows you to keep track of all formal issuances and submittals in specific dockets. This can reduce the amount of time you spend researching proceedings by automatically providing you with notification of these filings, document summaries, and direct links to the documents. Go to *http://www.ferc.gov/esubscribenow.htm.*

Finally, public meetings or site visits will be posted on the Commission's calendar located at *http://www.ferc.gov/EventCalendar/EventsList.aspx* along with other related information.

Kimberly D. Bose,

Secretary.

[FR Doc. 2010–26241 Filed 10–18–10; 8:45 am]

BILLING CODE 6717–01–P

DEPARTMENT OF ENERGY

Federal Energy Regulatory Commission

[Docket Nos. ER08–656–007; EL10–83–000]

Shell Energy North America (US), LP; Notice of Institution of Proceeding and Refund Effective Date

October 12, 2010.

On October 12, 2010, the Commission issued an order that instituted a proceeding in Docket No. EL10–83–000, pursuant to section 206 of the Federal Power Act (FPA), 16 U.S.C. 824e (2005), concerning the justness and reasonableness of Shell Energy North America (US), LP's market-based rate authority in the Central and Southwest balancing authority area. *Shell Energy North America (US), LP,* 133 FERC ¶ 61,033 (2010).

The refund effective date in Docket No. EL10–83–000, established pursuant to section 206(b) of the FPA, will be the date of publication of this notice in the **Federal Register.**

Kimberly D. Bose,

Secretary.

[FR Doc. 2010–26242 Filed 10–18–10; 8:45 am]

BILLING CODE 6717–01–P

DEPARTMENT OF ENERGY

Federal Energy Regulatory Commission

Sunshine Act Meeting Notice

October 14, 2010.

The following notice of meeting is published pursuant to section 3(a) of the government in the Sunshine Act (Pub. L. 94–409), 5 U.S.C. 552b:

AGENCY HOLDING MEETING: Federal Energy Regulatory Commission.

DATE AND TIME: October 21, 2010, 10 a.m.

PLACE: Room 2C, 888 First Street, NE., Washington, DC 20426.

STATUS: Open.

MATTERS TO BE CONSIDERED: Agenda

***Note**—Items listed on the agenda may be deleted without further notice.

CONTACT PERSON FOR MORE INFORMATION: Kimberly D. Bose, Secretary, Telephone (202) 502–8400.

For a recorded message listing items struck from or added to the meeting, call (202) 502–8627.

This is a list of matters to be considered by the Commission. It does not include a listing of all documents relevant to the items on the agenda. All public documents, however, may be viewed on line at the Commission's Web site at *http://www.ferc.gov* using the eLibrary link, or may be examined in the Commission's Public Reference Room.

963RD—MEETING; REGULAR MEETING

[October 21, 2010, 10 a.m.]

Item No.	Docket No.	Company
	Administrative	
A–1	AD02–1–000	Agency Administrative Matters.
A–2	AD02–7–000	Customer Matters, Reliability, Security and Market Operations.

963RD—MEETING; REGULAR MEETING—Continued

[October 21, 2010, 10 a.m.]

Item No.	Docket No.	Company
A–3	AD06–3–000	Energy Market Assessment—2010–2011 Winter/Summer Assessment.
A–4	AD10–5–000	RTO Performance Metrics.
	Electric	
E–1	ER10–1562–000, ER10–2254–000	Duke Energy Ohio, Inc. and Duke Energy Kentucky, Inc.
E–2	EL10–64–001	California Public Utilities Commission.
	EL10–66–001	Southern California Edison Company, Pacific Gas and Electric Company and San Diego Gas & Electric Company.
E–3	RM10–13–000	Credit Reforms in Organized Wholesale Electric Markets.
E–4	RR10–11–000	North American Electric Reliability Corporation.
E–5	RR10–13–000	North American Electric Reliability Corporation.
E–6	RM09–15–000	Version One Regional Reliability Standard for Resource and Demand Balancing.
E–7	OMITTED	
E–8	RM10–10–000	Planning Resource Adequacy Assessment Reliability Standard.
E–9	RM09–19–000	Western Electric Coordinating Council, Qualified Transfer Path Unscheduled Flow Relief Regional Reliability Standard.
E–10	ER09–1048–000	California Independent System Operator Corporation.
E–11	ER09–1049–000	Midwest Independent Transmission System Operator, Inc.
E–12	ER09–1050–000	Southwest Power Pool, Inc.
E–13	ER09–1051–000	ISO New England Inc. and New England Power Pool.
E–14	ER09–1063–000, ER09–1063–001	PJM Interconnection, L.L.C.
E–15	ER09–1142–000, ER09–1142–001	New York Independent System Operator, Inc.
E–16	ER10–166–000	Dynergy South Bay, LLC.
E–17	OMITTED	
E–18	ER10–192–000, ER10–192–001, ER10–192–002, ER10–192–003, ER10–192–004, ER10–192–005.	Public Service Company of Colorado.
	Gas	
G–1	RM11–1–000	Capacity Transfers on Intrastate Natural Gas Pipelines.
G–2	PR10–45–001	Arizona Public Service Company and Sequent Energy Management, L.P.
G–3	RP10–758–000	Portland Natural Gas Transmission System.
	Hydro	
H–1	P–12107–005	Granite County, Montana.
H–2	P–2496–222	Eugene Water and Electric Board.
H–3	P–13794–001	Thermalito Afterbay Hydro, LLC.
	Certificates	
C–1	OMITTED	
C–2	CP04–36–006	Weaver's Cove Energy, LLC.
C–3	CP10–490–000	Texas Eastern Transmission, LP and Texas Gas Transmission, LLC.
C–4	CP10–498–000	Ryckman Creek Resources, LLC.
C–5	CP10–23–000	UGI Storage Company.
	CP10–24–000	UGI Central Penn Gas, Inc.
C–6	OMITTED	
C–7	CP10–2–001	Southern Star Central Gas Pipeline, Inc.

Kimberly D. Bose,

Secretary.

A free webcast of this event is available through *http://www.ferc.gov.* Anyone with Internet access who desires to view this event can do so by navigating to *http://www.ferc.gov's* Calendar of Events and locating this event in the Calendar. The event will contain a link to its webcast. The Capitol Connection provides technical support for the free webcasts. It also offers access to this event via television in the DC area and via phone bridge for a fee. If you have any questions, visit *http://www.CapitolConnection.org* or contact Danelle Springer or David Reininger at 703–993–3100.

Immediately following the conclusion of the Commission Meeting, a press briefing will be held in the Commission Meeting Room. Members of the public may view this briefing in the designated overflow room. This statement is intended to notify the public that the press briefings that follow Commission meetings may now be viewed remotely at Commission headquarters, but will not be telecast through the Capitol Connection service.

[FR Doc. 2010–26356 Filed 10–15–10; 11:15 am]

BILLING CODE 6717–01–P

DEPARTMENT OF ENERGY

Federal Energy Regulatory Commission

[Docket No. PR10–11–002]

ECOP Gas Company, LLC; Notice of Revised Statement of Operating Conditions

October 8, 2010.

Take notice that on September 1, 2010, ECOP Gas Company, LLC (ECOP) filed their revised Statement of Operating Conditions for services provided under section 311 of the Natural Gas Policy Act of 1978 (NGPA)

in compliance to a provision in their Stipulation and Agreement accepted on August 12, 2010.

Any person desiring to participate in this rate filing must file in accordance with Rules 211 and 214 of the Commission's Rules of Practice and Procedure (18 CFR 385.211 and 385.214). Protests will be considered by the Commission in determining the appropriate action to be taken, but will not serve to make protestants parties to the proceeding. Any person wishing to become a party must file a notice of intervention or motion to intervene, as appropriate. Such notices, motions, or protests must be filed on or before the date as indicated below. Anyone filing an intervention or protest must serve a copy of that document on the Applicant. Anyone filing an intervention or protest on or before the intervention or protest date need not serve motions to intervene or protests on persons other than the Applicant.

The Commission encourages electronic submission of protests and interventions in lieu of paper using the "eFiling" link at *http://www.ferc.gov.* Persons unable to file electronically should submit an original and 14 copies of the protest or intervention to the Federal Energy Regulatory Commission, 888 First Street, NE., Washington, DC 20426.

This filing is accessible on-line at *http://www.ferc.gov,* using the "eLibrary" link and is available for review in the Commission's Public Reference Room in Washington, DC. There is an "eSubscription" link on the Web site that enables subscribers to receive e-mail notification when a document is added to a subscribed docket(s). For assistance with any FERC Online service, please e-mail *FERCOnlineSupport@ferc.gov,* or call (866) 208–3676 (toll free). For TTY, call (202) 502–8659.

Comment Date: 5 p.m. Eastern time on Thursday, October 14, 2010.

Kimberly D. Bose,

Secretary.

[FR Doc. 2010–26243 Filed 10–18–10; 8:45 am]

BILLING CODE 6717–01–P

ENVIRONMENTAL PROTECTION AGENCY

[FRL–9214–6]

Notice of a Regional Project Waiver of Section 1605 (Buy American) of the American Recovery and Reinvestment Act of 2009 (ARRA) to the City of Lowell, MA

AGENCY: Environmental Protection Agency (EPA)

ACTION: Notice.

SUMMARY: The EPA is hereby granting a waiver of the Buy American requirements of ARRA Section 1605 under the authority of Section 1605(b)(2) [manufactured goods are not produced in the United States in sufficient and reasonably available quantities and of a satisfactory quality] to the City of Lowell, Massachusetts ("City") for the purchase of a foreign manufactured heat recovery ventilator for the Lowell Wastewater Treatment Facility and Warren Street Combined Sewer Overflow (CSO) Diversion Station Improvements Project. This is a project specific waiver and only applies to the use of the specified product for the ARRA project being proposed. Any other ARRA recipient that wishes to use the same product must apply for a separate waiver based on project specific circumstances. Based upon information submitted by the City and its consulting engineer, it has been determined that there are currently no domestically manufactured heat recovery ventilators available to meet its proposed project and performance specifications. The Regional Administrator is making this determination based on the review and recommendations of the Municipal Assistance Unit. The Assistant Administrator of the Office of Administration and Resources Management has concurred on this decision to make an exception to Section 1605 of ARRA. This action permits the purchase of a foreign manufactured heat recovery ventilator by the City, as specified in its July 14, 2010 request.

DATES: *Effective Date:* October 8, 2010.

FOR FURTHER INFORMATION CONTACT: Katie Connors, Environmental Engineer, (617) 918–1658, or David Chin, Environmental Engineer, (617) 918–1764, Municipal Assistance Unit (CMU), Office of Ecosystem Protection (OEP), U.S. EPA, 5 Post Office Square, Suite 100, Boston, MA 02109–3912.

SUPPLEMENTARY INFORMATION: In accordance with ARRA Section 1605(c), the EPA hereby provides notice that it is granting a project waiver of the requirements of Section 1605(b)(2) of Public Law 111–5, Buy American requirements, to the City for the purchase of a non-domestically manufactured fixed plate heat recovery ventilator to meet the City's design and performance specifications as part of its proposed Lowell Wastewater Treatment Facility and Warren Street Combined Sewer Overflow (CSO) Diversion Station Improvements Project.

Section 1605 of the ARRA requires that none of the appropriated funds may be used for the construction, alteration, maintenance, or repair of a public building or a public works project unless all of the iron, steel, and manufactured goods used in the project is produced in the United States, or unless a waiver is provided to the recipient by the head of the appropriate agency, here the EPA. A waiver may be provided if EPA determines that (1) Applying these requirements would be inconsistent with the public interest; (2) iron, steel, and the relevant manufactured goods are not produced in the United States in sufficient and reasonably available quantities and of a satisfactory quality; or (3) inclusion of iron, steel, and the relevant manufactured goods produced in the United States will increase the cost of the overall project by more than 25 percent.

EPA has determined that the City's waiver request may be treated as timely even though the request was made after the construction contract was signed. Consistent with the direction of the OMB Guidance at 2 CFR176.120, EPA has evaluated the City's request to determine if the request constitutes a late request. EPA will generally regard waiver requests with respect to components that were specified in the bid solicitation or in a general/primary construction contract as "late" if submitted after the contract date. However, in this case EPA has determined that the City's request, though made after the date that the contract was signed, can be evaluated as timely because the need for a waiver was not reasonably foreseeable. After the contract date, during the shop drawing review, a domestic specified fixed plate heat recovery ventilator was found to be unavailable by the contractor. The need for a waiver was not determined until after the contractor had completed a search for a domestic manufacturer and had confirmed that there were no domestically made fixed plate heat recovery ventilators available to meet project specifications. Accordingly, EPA will evaluate the request as a timely request.

The City is requesting a waiver from the Buy American provision of ARRA for one Cleanair Designs Heat Recovery Ventilator for use in the proposed activated sludge treatment building. The unit is scheduled for installation on the roof. The unit will provide ventilation and heating to the building and the design includes an air-to-air heat exchanger. The exchanger will recover energy in the exhaust air stream and transfer it to the fresh air stream, reducing the energy consumption during the heating season, with zero cross-contamination between the air streams.

The City has researched foreign and domestic manufacturers of fixed plate heat recovery ventilators and has determined that domestic manufacturers are not able to manufacture a unit that meets all the project specifications. The specifications require that the heat exchanger be constructed with a polypropylene plate. The polypropylene plate was specified because the atmosphere inside the building where the heat recovery ventilator will be installed will be very corrosive. The polypropylene plate will better resist the corrosive return air circulated through the heat exchanger than a standard aluminum plate.

An evaluation of all of the submitted documentation by EPA's technical review team supports and confirms the City's claim that there are currently no domestic manufacturers that can provide a suitable fixed plate heat recovery ventilator to meet project specifications. The consulting engineer for the City identified two domestic manufacturers in the United States. Neither of the two companies currently manufactures heat recovery units that meet all the project specifications. An independent review of the submitted documentation by EPA's national contractor found four possible domestic manufacturers. However, none of the manufacturers contacted currently provides a product that meets the specifications and project requirements. In addition, the evaluation of the supporting documentation demonstrated that foreign manufactured heat recovery ventilators are available and will be able to meet the proposed project design and specifications.

Furthermore, the purpose of the ARRA is to stimulate economic recovery by funding current infrastructure construction, not to delay or curtail entirely projects that are "shovel ready" by requiring potential SRF eligible recipients, such as the City of Lowell, MA, to revise their design standards and specifications. To curtail entirely this construction would directly conflict with a fundamental economic purpose of ARRA, which is to create or retain jobs.

The April 28, 2009 EPA HQ Memorandum, "Implementation of Buy American provisions of Public Law 111–5, the 'American Recovery and Reinvestment Act of 2009' " ("Memorandum"), defines *reasonably available quantity* as "the quantity of iron, steel, or relevant manufactured good is available or will be available at the time needed and place needed, and in the proper form or specification as specified in the project plans and design." The same Memorandum defines "satisfactory quality" as "the quality of steel, iron or manufactured good specified in the project plans and designs."

The Municipal Assistance Unit (CMU) has reviewed this waiver request and has determined that the supporting documentation provided by the City establishes both a proper basis to specify a particular manufactured good, and that the domestically manufactured good that is currently available does not meet the design specifications for the proposed project. The information provided is sufficient to meet the following criteria listed under Section 1605(b) of the ARRA and in the April 28, 2009 Memorandum: Iron, steel, and the manufactured goods are not produced in the United States in sufficient and reasonably available quantities and of a satisfactory quality.

The March 31, 2009 Delegation of Authority Memorandum provided Regional Administrators with the temporary authority to issue exceptions to Section 1605 of the ARRA within the geographic boundaries of their respective regions and with respect to requests by individual grant recipients.

Having established both a proper basis to specify the particular good required for this project and that this manufactured good was not available from a producer in the United States, the City of Lowell, MA is hereby granted a waiver from the Buy American requirements of Section 1605(a) of Public Law 111–5. This waiver permits use of ARRA funds for the purchase of a non-domestically manufactured fixed plate heat recovery ventilator documented in City's waiver request submittal dated July 14, 2010. This supplementary information constitutes the detailed written justification required by Section 1605(c) for waivers based on a finding under subsection (b).

Authority: Pub. L. 111–5, section 1605.

Dated: October 8, 2010.

Ira W. Leighton,

Acting Regional Administrator, EPA Region 1—New England.

[FR Doc. 2010–26260 Filed 10–18–10; 8:45 am]

BILLING CODE 6560–50–P

DEPARTMENT OF HEALTH AND HUMAN SERVICES

Centers for Disease Control and Prevention

[Docket Number NIOSH–220]

Components for Evaluation of Direct-Reading Monitors for Gases and Vapors and Addendum

AGENCY: National Institute for Occupational Safety and Health (NIOSH) of the Centers for Disease Control and Prevention (CDC), Department of Health and Human Services (HHS).

ACTION: Notice of draft publication available for public comment.

SUMMARY: The National Institute for Occupational Safety and Health (NIOSH) of the Centers for Disease Control and Prevention (CDC) announces the availability of the following draft publication for public comment. The document and its addendum are entitled, respectively, "Components for Evaluation of Direct-Reading Monitors for Gases and Vapors" and "Addendum to Components for Evaluation of Direct-Reading Monitors for Gases and Vapors: Hazard Detection in First Responder Environments." The draft documents and instructions for submitting comments can be found at: *http://www.cdc.gov/niosh/docket/review/docket220.* The document expands the 1995 method development and evaluation experimental testing methods to direct-reading monitors for gases and vapors. These *Components* are provided for laboratory users, consensus standard setting bodies, and manufacturers of direct-reading instrumentation and are compatible with the Instrumentation, Systems, and Automation Society guidelines. The addendum to the document expands the applicability of the Components by presenting methods to be used in evaluating direct-reading monitors for hazard detection in First Responder environments. The 1995 document, entitled "Guidelines for Air Sampling and Analytical Method Development and Evaluation," can be viewed at: *http://www.cdc.gov/niosh/docs/95–117/.*

This guidance does not have the force and effect of the law.

DATES: *Public Comment Period:* Comments must be received by December 20, 2010.

ADDRESSES: Written comments may be submitted to the NIOSH Docket Office, identified by Docket Number NIOSH–220, by any of the following methods:

- *Mail:* NIOSH Docket Office, Robert A. Taft Laboratories, MS–C34, 4676 Columbia Parkway, Cincinnati, Ohio 45226.
- *Facsimile:* (513) 533–8285.
- *E-mail: nioshdocket@cdc.gov.*

All information received in response to this notice will be available for public examination and copying at the NIOSH Docket Office, 4676 Columbia Parkway, Room 111, Cincinnati, Ohio 45226. A complete electronic docket containing all comments submitted will be available on the NIOSH web page at *http://www.cdc.gov/niosh/docket,* and comments will be available in writing by request. NIOSH includes all comments received without change in the docket, including any personal information provided. All electronic comments should be formatted as Microsoft Word. Please make reference to Docket Number NIOSH–220.

FOR FURTHER INFORMATION CONTACT: Stanley A. Shulman, PhD., telephone (513) 841–4258, e-mail *mailto: sas2@cdc.gov,* or Amy Feng, M.S., telephone (513) 841–4128, e-mail *haf0@cdc.gov,* NIOSH, MS–R3, 4676 Columbia Parkway, Cincinnati, OH 45226.

John Howard,

Director, National Institute for Occupational Safety and Health, Centers for Disease Control and Prevention.

[FR Doc. 2010–26221 Filed 10–18–10; 8:45 am]

BILLING CODE 4163–18–P

DEPARTMENT OF HEALTH AND HUMAN SERVICES

Food and Drug Administration

[Docket No. FDA–2010–P–0234]

Determination That BUSPAR (Buspirone Hydrochloride) Tablets, 10 Milligrams, 15 Milligrams, and 30 Milligrams, Were Not Withdrawn From Sale for Reasons of Safety or Effectiveness

AGENCY: Food and Drug Administration, HHS.

ACTION: Notice.

SUMMARY: The Food and Drug Administration (FDA) has determined that BUSPAR (buspirone hydrochloride) Tablets, 10 milligrams (mg), 15 mg, and 30 mg, were not withdrawn from sale for reasons of safety or effectiveness. This determination means that FDA will not begin procedures to withdraw approval of abbreviated new drug applications (ANDAs) that refer to this drug product, and it will allow FDA to continue to approve ANDAs that refer to the product as long as they meet relevant legal and regulatory requirements.

FOR FURTHER INFORMATION CONTACT: Molly Flannery, Center for Drug Evaluation and Research, Food and Drug Administration, 10903 New Hampshire Ave., Bldg. 51, rm. 6237, Silver Spring, MD 20993–0002, 301–796–3543.

SUPPLEMENTARY INFORMATION: In 1984, Congress enacted the Drug Price Competition and Patent Term Restoration Act of 1984 (Pub. L. 98–417) (the 1984 amendments), which authorized the approval of duplicate versions of drug products approved under an ANDA procedure. ANDA applicants must, with certain exceptions, show that the drug for which they are seeking approval contains the same active ingredient in the same strength and dosage form as the "listed drug," which is a version of the drug that was previously approved. ANDA applicants do not have to repeat the extensive clinical testing otherwise necessary to gain approval of a new drug application (NDA). The only clinical data required in an ANDA are data to show that the drug that is the subject of the ANDA is bioequivalent to the listed drug.

The 1984 amendments include what is now section 505(j)(7) of the Federal Food, Drug, and Cosmetic Act (21 U.S.C. 355(j)(7)), which requires FDA to publish a list of all approved drugs. FDA publishes this list as part of the "Approved Drug Products With Therapeutic Equivalence Evaluations," which is known generally as the "Orange Book." Under FDA regulations, drugs are removed from the list if the agency withdraws or suspends approval of the drug's NDA or ANDA for reasons of safety or effectiveness or if FDA determines that the listed drug was withdrawn from sale for reasons of safety or effectiveness (21 CFR 314.162). Under § 314.161(a)(1) (21 CFR 314.161(a)(1)), the agency must determine whether a listed drug was withdrawn from sale for reasons of safety or effectiveness before an ANDA that refers to that listed drug may be approved. FDA may not approve an ANDA that does not refer to a listed drug. Under § 314.161(a)(2), FDA must determine whether a listed drug was withdrawn from sale for reasons of safety or effectiveness whenever a listed drug is voluntarily withdrawn from sale and ANDAs that refer to the listed drug have been approved. Section 314.161(d) provides that if FDA determines that a listed drug was withdrawn from sale for reasons of safety or effectiveness, the agency will initiate proceedings that could result in the withdrawal of approval of the ANDAs that refer to the listed drug.

BUSPAR (buspirone hydrochloride) Tablets, 10 mg, 15 mg, and 30 mg, are the subject of NDA 18–731, held by Bristol-Myers Squibb, and initially approved on September 29, 1986 (10 mg strength), and April 22, 1996 (15 mg and 30 mg strengths). BUSPAR is indicated for the management of anxiety disorders or the short-term relief of the symptoms of anxiety. BUSPAR (buspirone hydrochloride) Tablets, 10 mg, 15 mg, and 30 mg, are currently listed in the "Discontinued Drug Product List" section of the Orange Book. There are approved ANDAs for buspirone hydrochloride tablets, 10 mg, 15 mg, and 30 mg; these ANDAs are listed in the Orange Book and, following the discontinuation of BUSPAR, one of them was designated as the reference listed drug to which new ANDAs should refer.

Lachman Consultant Services, Inc., submitted a citizen petition dated May 4, 2010 (Docket No. FDA–2010–P–0234), under 21 CFR 10.30, requesting that the agency determine whether BUSPAR (buspirone hydrochloride) Tablets, 15 mg and 30 mg, were withdrawn from sale for reasons of safety or effectiveness. Although the citizen petition did not address the 10 mg strength, that strength has also been discontinued. On our own initiative, we have also determined whether that strength was withdrawn for safety or effectiveness reasons.

After considering the citizen petition and reviewing agency records, FDA has determined under § 314.161 that BUSPAR (buspirone hydrochloride) Tablets, 10 mg, 15 mg, and 30 mg, were not withdrawn for reasons of safety or effectiveness. The petitioner has identified no data or other information suggesting that BUSPAR (buspirone hydrochloride) Tablets, 10 mg, 15 mg, and 30 mg, were withdrawn for reasons of safety or effectiveness. We have carefully reviewed our files for records concerning the withdrawal of BUSPAR (buspirone hydrochloride) Tablets, 10 mg, 15 mg, and 30 mg, from sale. We have also independently evaluated relevant literature and data for possible postmarketing adverse events and have found no information that would indicate that this product was

withdrawn from sale for reasons of safety or effectiveness.

Accordingly, the agency will continue to list BUSPAR (buspirone hydrochloride) Tablets, 10 mg, 15 mg, and 30 mg, in the "Discontinued Drug Product List" section of the Orange Book. The "Discontinued Drug Product List" delineates, among other items, drug products that have been discontinued from marketing for reasons other than safety or effectiveness. FDA will not begin procedures to withdraw approval of approved ANDAs that refer to BUSPAR. Additional ANDAs for buspirone hydrochloride tablets, 10 mg, 15 mg, and 30 mg, may also be approved by the agency as long as they meet all other legal and regulatory requirements for the approval of ANDAs. If FDA determines that labeling for this drug product should be revised to meet current standards, the agency will advise ANDA applicants to submit such labeling.

Dated: October 13, 2010.

David Dorsey,

Acting Deputy Commissioner for Policy, Planning and Budget.

[FR Doc. 2010–26214 Filed 10–18–10; 8:45 am]

BILLING CODE 4160–01–P

DEPARTMENT OF HEALTH AND HUMAN SERVICES

National Institutes of Health

National Eye Institute; Notice of Closed Meeting

Pursuant to section 10(d) of the Federal Advisory Committee Act, as amended (5 U.S.C. App.), notice is hereby given of the following meeting.

The meeting will be closed to the public in accordance with the provisions set forth in sections 552b(c)(4) and 552b(c)(6), Title 5 U.S.C., as amended. The grant applications and the discussions could disclose confidential trade secrets or commercial property such as patentable material, and personal information concerning individuals associated with the grant applications, the disclosure of which would constitute a clearly unwarranted invasion of personal privacy.

Name of Committee: National Eye Institute Special Emphasis Panel, NIH Training Grants.

Date: December 6, 2010.

Time: 8:30 a.m. to 5:30 p.m.

Agenda: To review and evaluate grant applications.

Place: Embassy Suites at the Chevy Chase Pavilion, 4300 Military Road, NW., Washington, DC 20015.

Contact Person: Daniel R. Kenshalo, PhD, Scientific Review Officer, Division of Extramural Research, National Eye Institute, National Institutes of Health, 5635 Fishers Lane, Suite 1300, MSC 9300. 301–451–2020. *kenshalod@nei.nih.gov.*

(Catalogue of Federal Domestic Assistance Program Nos. 93.867, Vision Research, National Institutes of Health, HHS)

Dated: October 13, 2010.

Jennifer Spaeth,

Director, Office of Federal Advisory Committee Policy.

[FR Doc. 2010–26310 Filed 10–18–10; 8:45 am]

BILLING CODE 4140–01–P

DEPARTMENT OF HEALTH AND HUMAN SERVICES

Administration for Children and Families

Notice of Meeting; National Commission on Children and Disasters

AGENCY: Administration for Children and Families, Department of Health and Human Services.

ACTION: Notice of Meeting.

DATES: The meeting will be held on Monday, November 15, 2010, from 9:30 a.m. to 3:30 p.m.

ADDRESSES: The meeting will be held at the Administration for Children and Families, 901 D Street, SW., Washington, DC 20024. To attend either in person or via teleconference, please register by 5 p.m., Eastern Time, November 10, 2010. To register, please e-mail *Jacqueline.Officer@acf.hhs.gov* with "Meeting Registration" in the subject line, or call (202) 205–9560. Registration must include your name, affiliation, and phone number. If you require a sign language interpreter or other special assistance, please call Jacqueline Officer at (202) 205–9560 or e-mail *Jacqueline.Officer@acf.hhs.gov* as soon as possible and no later than 5 p.m. Eastern Time, November 1, 2010.

Agenda: The Commission will: (1) Discuss a recommendation to establish a National Resource Center on Children and Disasters; (2) Discuss implementation strategies for recommendations published in the 2010 Report to the President and Congress; and (3) Discuss potential issues for future study and changes to subcommittee structure.

Written comments may be submitted electronically to *Juliana.Sadovich@acf.hhs.gov* with "Public Comment" in the subject line. The Commission recommends that you include your name, mailing address and an e-mail address or other contact information in the body of your comment. This ensures that you can be identified as the submitter of the comment, and it allows the Commission to contact you if further information on the substance of the comment is needed or if your comment cannot be read due to technical difficulties. The Commission's policy is that the Commission will not edit your comment, and any identifying or contact information provided in the body of a comment will be included as part of the comment placed in the official record.

The Commission will provide an opportunity for public comments during the public meeting on November 15, 2010. Those wishing to speak will be limited to three minutes each; speakers are encouraged to submit their remarks in writing in advance to ensure their comment is received in case there is inadequate time for all comments to be heard on November 15, 2010.

Additional Information: Contact CAPT Juliana Sadovich, RN, PhD Director, Office of Human Services Emergency Preparedness and Response, e-mail Juliana.Sadovich@acf.hhs.gov or call (202) 401–9306.

SUPPLEMENTARY INFORMATION: The National Commission on Children and Disasters is an independent Commission directed to conduct a comprehensive study to examine and assess the needs of children as they relate to preparation for, response to, and recovery from all hazards, building upon the evaluations of other entities and avoiding unnecessary duplication by reviewing the findings, conclusions, and recommendations of these entities. The Commission submitted reports to the President and the Congress on the Commission's independent and specific findings, conclusions, and recommendations to address the needs of children as they relate to preparation for, response to, and recovery from all hazards, including major disasters and emergencies.

Dated: October 13, 2010.

David A. Hansell,

Acting Assistant Secretary for Children and Families.

[FR Doc. 2010–26231 Filed 10–18–10; 8:45 am]

BILLING CODE 4184–06–P

DEPARTMENT OF HEALTH AND HUMAN SERVICES

National Toxicology Program (NTP); Office of Liaison, Policy and Review Meeting of the NTP Board of Scientific Counselors

AGENCY: National Institute of Environmental Health Sciences (NIEHS), National Institutes of Health.

ACTION: Meeting announcement and request for comments.

SUMMARY: Pursuant to Public Law 92–463, notice is hereby given of a meeting of the NTP Board of Scientific Counselors (BSC). The BSC is a federally chartered, external advisory group composed of scientists from the public and private sectors that provides primary scientific oversight to the NTP Director and evaluates the scientific merit of the NTP's intramural and collaborative programs.

DATES: The BSC meeting will be held on November 30—December 1, 2010. The deadline for submission of written comments is November 9, 2010, and for pre-registration to attend the meeting, including registering to present oral comments, is November 16, 2010. Persons needing interpreting services in order to attend should contact 301–402–8180 (voice) or 301–435–1908 (TTY). For other accommodations while on the NIEHS campus, contact 919–541–2475 or e-mail *niehsoeeo@niehs.nih.gov.* Requests should be made at least 7 business days in advance of the event.

ADDRESSES: The BSC meeting will be held in the Rodbell Auditorium, Rall Building at the NIEHS, 111 T.W. Alexander Drive, Research Triangle Park, NC 27709. Public comments on all agenda topics and any other correspondence should be submitted to Dr. Lori White, Designated Federal Officer for the BSC, NTP Office of Liaison, Policy and Review, NIEHS, P.O. Box 12233, K2–03, Research Triangle Park, NC 27709; telephone: 919–541–9834; fax: 919–541–0295; *whiteld@niehs.nih.gov.* Courier address: NIEHS, 530 Davis Drive, Room K2136, Morrisville, NC 27560.

FOR FURTHER INFORMATION CONTACT: Dr. Lori D. White (telephone: 919–541–9834 or *whiteld@niehs.nih.gov*).

SUPPLEMENTARY INFORMATION:

Preliminary Agenda Topics and Availability of Meeting Materials

- Report of the NIEHS/NTP Director.
- Report of the NTP Associate Director.
- Contract Concept: NTP Sperm Count and Vaginal Cytology.
- Review of the Biomolecular Screening Branch.
- Testing Program Proposed Research Projects.

The preliminary agenda, roster of BSC members, background materials, public comments, and any additional information, when available, will be posted on the BSC meeting Web site (*http://ntp.niehs.nih.gov/go/165*) or may be requested in hardcopy from the Designated Federal Officer for the BSC (*see* **ADDRESSES** above). Updates to the preliminary agenda will also be posted to this site. The draft research concepts for the NTP testing program nominations should be available on the BSC meeting page (*http://ntp.niehs.nih.gov/go/165*) by October 19, 2010.

Following the meeting, summary minutes will be prepared and made available on the BSC meeting Web site.

Attendance and Registration

The meeting is scheduled for November 30—December 1, 2010, beginning at 8 a.m. (Eastern Standard Time) and continuing to approximately 5:30 p.m. on November 30 and until adjournment on December 1. This meeting is open to the public with attendance limited only by the space available. Individuals who plan to attend are encouraged to register online at the BSC meeting Web site (*http://ntp.niehs.nih.gov/go/165*) by November 16, 2010, to facilitate planning for the meeting. Registered attendees are encouraged to access the meeting Web site to stay abreast of the most current information regarding the meeting. The NTP is making plans to videocast the meeting through the Internet at *http://www.niehs.nih.gov/news/video/live.*

Request for Comments

Written comments submitted in response to this notice should be received by November 9, 2010. Comments will be posted on the BSC meeting Web site and persons submitting them will be identified by their name and affiliation and/or sponsoring organization, if applicable. Persons submitting written comments should include their name, affiliation (if applicable), phone, e-mail, and sponsoring organization (if any) with the document.

Time will be allotted during the meeting for the public to present oral comments to the BSC on the agenda topics. In addition to in-person oral comments at the meeting at the NIEHS, public comments can be presented by teleconference line. There will be 50 lines for this call; availability will be on a first-come, first-served basis. The available lines will be open from 7:30 a.m. until 5:30 p.m. on November 30, and 7:30 a.m. until adjournment on December 1, although public comments will be received only during the formal public comment periods, which are indicated on the preliminary agenda. Each organization is allowed one time slot per agenda topic. At least 7 minutes will be allotted to each speaker, and if time permits, may be extended to 10 minutes at the discretion of the BSC chair. Persons wishing to present oral comments are encouraged to pre-register on the NTP meeting Web site and indicate whether they will present comments in-person or via the teleconference line. The access number for the teleconference line will be provided to registrants by e-mail prior to the meeting. Registration for oral comments will also be available on both meeting days, although time allowed for presentation by these registrants may be less than that for pre-registered speakers and will be determined by the number of persons who register at the meeting.

Persons registering to make oral comments are asked to send a copy of their statement or PowerPoint slides to the Designated Federal Officer for the BSC (*see* **ADDRESSES** above) by November 16, 2010, to enable review by the BSC prior to the meeting. Written statements can supplement and may expand the oral presentation. If registering on-site and reading from written text, please bring 40 copies of the statement for distribution to the BSC and NTP staff and to supplement the record.

Background Information on NTP Testing Program Nominations and Proposed Research Projects

The NTP actively seeks to identify and select for study chemicals and other substances for which sufficient information is not available to adequately evaluate potential human health hazards. The NTP accomplishes this goal through a formal, open nomination and selection process. Substances considered appropriate for study generally fall into two broad, yet overlapping categories: (1) Substances judged to have high concern as possible public health hazards based on the extent of human exposure and/or suspicion of toxicity and (2) substances for which toxicological data gaps exist and additional studies would aid in assessing potential human health risks, *e.g.,* by facilitating cross-species extrapolation or evaluating dose-response relationships. Nominations are subject to a multi-step, formal process of review before selections for testing are made and toxicological studies are designed and implemented. The nomination review and selection process is accomplished through the participation of representatives from the NIEHS, the BSC, the NTP Executive Committee—the NTP Federal interagency policy body, and the public. The nomination review and selection process is described in further detail on the NTP Web site (*http://*

ntp.niehs.nih.gov/, select "Nominations to the Testing Program").

The NTP invites interested parties to submit written comments, provide supplementary information, or present oral comments at the BSC meeting on the nominated substances and preliminary study recommendations (*see* "Request for Comments" below). The NTP welcomes toxicology study information from completed, ongoing, or anticipated studies, as well as information on current U.S. production levels, use or consumption patterns, human exposure, environmental occurrence, or public health concerns for any of the nominated substances. The NTP is interested in identifying appropriate animal and non-animal experimental models for mechanistic-based research, including genetically modified rodents and high-throughput *in vitro* test methods, and as such, solicits comments regarding the use of specific *in vivo* and *in vitro* experimental approaches to address questions relevant to the nominated substances and issues under consideration. Although the deadline for submission of written comments to be considered at the BSC meeting is November 16, 2010 (*see* "Request for Comments" above), the NTP welcomes comments or additional information on these study nominations at any time.

To facilitate review of the proposed research project by the BSC and the public, NTP staff developed a draft research concept document for the nomination recommended for study. A research concept is a brief document outlining the nomination or study rationale, and the significance, study approach, and expected outcome of a proposed research program tailored for each nomination. The purpose of a research concept is to outline the general elements of a program of study that would address the specific issues that prompted the nomination and the preliminary study recommendations. A research concept may also encompass larger public health issues or topics in toxicology that could be appropriately addressed through studies on the nominated substance(s). Draft research concepts should be available on the BSC meeting page (*http://ntp.niehs.nih.gov/go/165*) by October 19, 2010.

Background Information on the NTP Board of Scientific Counselors

The BSC is a technical advisory body comprised of scientists from the public and private sectors that provides primary scientific oversight to the NTP. Specifically, the BSC advises the NTP on matters of scientific program content, both present and future, and conducts periodic review of the program for the purpose of determining and advising on the scientific merit of its activities and their overall scientific quality. Its members are selected from recognized authorities knowledgeable in fields such as toxicology, pharmacology, pathology, biochemistry, epidemiology, risk assessment, carcinogenesis, mutagenesis, molecular biology, behavioral toxicology, neurotoxicology, immunotoxicology, reproductive toxicology or teratology, and biostatistics. Members serve overlapping terms of up to four years. The BSC usually meets biannually.

Dated: October 5, 2010.

John R. Bucher,

Associate Director, National Toxicology Program.

[FR Doc. 2010–26023 Filed 10–18–10; 8:45 am]

BILLING CODE 4140–01–P

DEPARTMENT OF HEALTH AND HUMAN SERVICES

Food and Drug Administration

[Docket No. FDA–2010–N–0001]

Endocrinologic and Metabolic Drugs Advisory Committee; Notice of Meeting

AGENCY: Food and Drug Administration, HHS.

ACTION: Notice.

This notice announces a forthcoming meeting of a public advisory committee of the Food and Drug Administration (FDA). The meeting will be open to the public.

Name of Committee: Endocrinologic and Metabolic Drugs Advisory Committee.

General Function of the Committee: To provide advice and recommendations to the Agency on FDA's regulatory issues.

Date and Time: The meeting will be held on December 7, 2010, from 8 a.m. to 5 p.m.

Location: FDA White Oak Campus, 10903 New Hampshire Ave., Building 31 Conference Center, the Great Room (rm. 1503), Silver Spring, MD 20993–0002. Information regarding special accommodations due to a disability, visitor parking, and transportation may be accessed at *http://www.fda.gov/AdvisoryCommittees/default.htm;* under the heading "Resources for You", click on "White Oak Conference Center Parking and Transportation Information for FDA Advisory Committee Meetings".

Contact Person: Paul Tran, Center for Drug Evaluation and Research, Food and Drug Administration, 10903 New Hampshire Ave., Bldg. 31, rm. 2417, Silver Spring, MD 20993–0002, 301–796–9001, FAX: 301–847–8540, e-mail: *paul.tran@fda.hhs.gov,* or FDA Advisory Committee Information Line, 1–800–741–8138 (301–443–0572 in the Washington, DC area), code 3014512536. Please call the Information Line for up-to-date information on this meeting. A notice in the **Federal Register** about last minute modifications that impact a previously announced advisory committee meeting cannot always be published quickly enough to provide timely notice. Therefore, you should always check the Agency's Web site and call the appropriate advisory committee hot line/phone line to learn about possible modifications before coming to the meeting.

Agenda: On December 7, 2010, the committee will discuss the safety and efficacy of new drug application (NDA) 20–0063, proposed tradename CONTRAVE (naltrexone HCl/bupropion HCl) extended-release tablets, manufactured by Orexigen Therapeutics, Inc., for the treatment of obesity and weight management, including weight loss and maintenance of weight loss in patients with an initial body mass index (BMI) of equal to or greater than 30 kilograms (kg) per square meter, or a BMI equal to or greater than 27 kg per square meter with one or more risk factors (*e.g.* diabetes, dyslipidemia, or hypertension). The BMI is a measure of body weight (mass) based on a person's weight and height, and is a widely-used tool for doctors in assessing optimum weights for a patient.

FDA intends to make background material available to the public no later than 2 business days before the meeting. If FDA is unable to post the background material on its Web site prior to the meeting, the background material will be made publicly available at the location of the advisory committee meeting, and the background material will be posted on FDA's Web site after the meeting. Background material is available at *http://www.fda.gov/AdvisoryCommittees/Calendar/default.htm.* Scroll down to the appropriate advisory committee link.

Procedure: Interested persons may present data, information, or views, orally or in writing, on issues pending before the committee. Written submissions may be made to the contact person on or before November 22, 2010. Oral presentations from the public will be scheduled between approximately 1 p.m. and 2 p.m. Those desiring to make formal oral presentations should notify the contact person and submit a brief statement of the general nature of the evidence or arguments they wish to present, the names and addresses of proposed participants, and an indication of the approximate time requested to make their presentation on or before November 12, 2010. Time allotted for each presentation may be limited. If the number of registrants requesting to speak is greater than can be reasonably accommodated during the scheduled open public hearing session, FDA may conduct a lottery to determine the speakers for the scheduled open public hearing session. The contact person will notify interested persons regarding their request to speak by November 15, 2010.

Persons attending FDA's advisory committee meetings are advised that the Agency is not responsible for providing access to electrical outlets.

FDA welcomes the attendance of the public at its advisory committee meetings and will make every effort to accommodate

persons with physical disabilities or special needs. If you require special accommodations due to a disability, please contact Paul Tran at least 7 days in advance of the meeting.

FDA is committed to the orderly conduct of its advisory committee meetings. Please visit our Web site at *http://www.fda.gov/AdvisoryCommittees/AboutAdvisoryCommittees/ucm111462.htm* for procedures on public conduct during advisory committee meetings.

Notice of this meeting is given under the Federal Advisory Committee Act (5 U.S.C. app. 2).

Dated: October 14, 2010.

Jill Hartzler Warner,

Acting Associate Commissioner for Special Medical Programs.

[FR Doc. 2010–26251 Filed 10–18–10; 8:45 am]

BILLING CODE 4160–01–P

DEPARTMENT OF HEALTH AND HUMAN SERVICES

Food and Drug Administration

[Docket No. FDA–2010–N–0001]

Oncologic Drugs Advisory Committee; Notice of Meeting

AGENCY: Food and Drug Administration, HHS.

ACTION: Notice.

This notice announces a forthcoming meeting of a public advisory committee of the Food and Drug Administration (FDA). The meeting will be open to the public.

Name of Committee: Oncologic Drugs Advisory Committee.

General Function of the Committee: To provide advice and recommendations to the Agency on FDA's regulatory issues.

Date and Time: The meeting will be held on December 2, 2010, from 8 a.m. to 5 p.m.

Location: FDA White Oak Campus, 10903 New Hampshire Ave., Building 31 Conference Center, the Great Room (rm. 1503), Silver Spring, MD 20993–0002. Information regarding special accommodations due to a disability, visitor parking, and transportation may be accessed at *http://www.fda.gov/AdvisoryCommittees/default.htm;* under the heading "Resources for You", click on "White Oak Conference Center Parking and Transportation Information for FDA Advisory Committee Meetings".

Contact Person: Nicole Vesely, Center for Drug Evaluation and Research, Food and Drug Administration, 10903 New Hampshire Ave., Bldg. 31, rm. 2417, Silver Spring, MD 20993–0002, 301–796–9001, FAX: 301–847–8533, e-mail: *Nicole.vesely@fda.hhs.gov,* or FDA Advisory Committee Information Line, 1–800–741–8138 (301–443–0572 in the Washington, DC area), code 301–451–2542. Please call the Information Line for up-to-date information on this meeting. A notice in the **Federal Register** about last minute modifications that impact a previously announced advisory committee meeting cannot always be published quickly enough to provide timely notice. Therefore, you should always check the Agency's Web site and call the appropriate advisory committee hot line/phone line to learn about possible modifications before coming to the meeting.

Agenda: On December 2, 2010, during the morning session, the committee will discuss biologics license application (BLA) 125377, with the proposed trade name Yervoy (ipilimumab), manufactured by Bristol-Myers Squibb Company. The proposed indication (use) for this product is for the treatment of advanced melanoma in patients who have received prior therapy. During the afternoon session, the committee will discuss new drug application (NDA) 022–405, with the proposed trade name Zictifa (vandetanib) Tablets, manufactured by iPR Pharmaceuticals, Inc., represented by AstraZeneca Pharmaceuticals LP (authorized U.S. agent). The proposed indication (use) for this product is for the treatment of patients with unresectable (non-operable) locally advanced or metastatic medullary thyroid cancer.

FDA intends to make background material available to the public no later than 2 business days before the meeting. If FDA is unable to post the background material on its Web site prior to the meeting, the background material will be made publicly available at the location of the advisory committee meeting, and the background material will be posted on FDA's Web site after the meeting. Background material is available at *http://www.fda.gov/AdvisoryCommittees/Calendar/default.htm.* Scroll down to the appropriate advisory committee link.

Procedure: Interested persons may present data, information, or views, orally or in writing, on issues pending before the committee. Written submissions may be made to the contact person on or before November 16, 2010. Oral presentations from the public will be scheduled between approximately 10:30 a.m. and 11 a.m. and between approximately 3:30 p.m. and 4 p.m. Those desiring to make formal oral presentations should notify the contact person and submit a brief statement of the general nature of the evidence or arguments they wish to present, the names and addresses of proposed participants, and an indication of the approximate time requested to make their presentation on or before November 8, 2010. Time allotted for each presentation may be limited. If the number of registrants requesting to speak is greater than can be reasonably accommodated during the scheduled open public hearing session, FDA may conduct a lottery to determine the speakers for the scheduled open public hearing session. The contact person will notify interested persons regarding their request to speak by November 9, 2010.

Persons attending FDA's advisory committee meetings are advised that the Agency is not responsible for providing access to electrical outlets.

FDA welcomes the attendance of the public at its advisory committee meetings and will make every effort to accommodate persons with physical disabilities or special needs. If you require special accommodations due to a disability, please contact Nicole Vesely at least 7 days in advance of the meeting.

FDA is committed to the orderly conduct of its advisory committee meetings. Please visit our Web site at *http://www.fda.gov/AdvisoryCommittees/AboutAdvisoryCommittees/ucm111462.htm* for procedures on public conduct during advisory committee meetings.

Notice of this meeting is given under the Federal Advisory Committee Act (5 U.S.C. app. 2).

Dated: *October 14, 2010.*

Jill Hartzler Warner,

Acting Associate Commissioner for Special Medical Programs.

[FR Doc. 2010–26247 Filed 10–18–10; 8:45 am]

BILLING CODE 4160–01–P

DEPARTMENT OF HEALTH AND HUMAN SERVICES

Food and Drug Administration

[Docket No. FDA–2010–N–0487]

Product Development Program for Interventions in Patients With Severe Bleeding Due to Trauma or Other Causes; Public Workshop

AGENCY: Food and Drug Administration, HHS.

ACTION: Notice of public workshop.

The Food and Drug Administration (FDA) is announcing a 2-day public workshop entitled "Product Development Program for Interventions in Patients with Severe Bleeding Due to Trauma or Other Causes." The purpose of this public workshop is to discuss possible paradigms for the evaluation of products indicated for use to stop severe bleeding. The workshop has been planned in partnership with the Department of Health and Human Services, Office of Public Health and Science; the National Heart, Lung and Blood Institute; and the Department of Defense. The public workshop will include presentations and panel discussions by experts from academic institutions, government agencies, and industry.

Dates and Times: The public workshop will be held on December 9, 2010, from 8 a.m. to 5:30 p.m. and December 10, 2010, from 8 a.m. to 1 p.m.

Location: The public workshop will be held at the Masur Auditorium, 10 Center Dr., Bldg. 10, Clinical Center, National Institutes of Health, Bethesda, MD 20892.

Contact Person: Rhonda Dawson, Center for Biologics Evaluation and Research (HFM–302), Food and Drug Administration, 1401 Rockville Pike,

suite 200N, Rockville, MD 20852–1448, 301–827–6129, *FAX:* 301–827–2843, *e-mail: rhonda.dawson@fda.hhs.gov.*

Registration: Mail, fax, or e-mail your registration information (including name, title, firm name, address, telephone and fax numbers) to the contact person (*see Contact Person*) by November 19, 2010. There is no registration fee for the public workshop. Early registration is recommended because seating is limited. Registration on the day of the public workshop will be provided on a space-available basis beginning at 7:30 a.m.

If you need special accommodations due to a disability, please contact Rhonda Dawson (*see CONTACT PERSON*) at least 7 days in advance.

SUPPLEMENTARY INFORMATION: Severe bleeding may be encountered in both traumatic and non-traumatic clinical situations. New products for the treatment of severe bleeding are needed to reduce the need for blood transfusions, minimize complications resulting from blood loss, and improve patient outcomes. The development and approval of new products for use in treatment of severe bleeding, particularly severe bleeding resulting from trauma, has been complicated by the lack of a consensus definition of severe bleeding as well as the need to identify appropriate clinical endpoints for assessment of product safety and efficacy. Clinical endpoints may vary depending on the product indications, patient characteristics, nature of injury, whether the product acts locally or systemically, the nature of the product (*e.g.,* device, drug, biologic, or combination), and conditions of use.

Because it may not always be feasible to obtain standard informed consent, clinical trials of products used for the treatment of life-threatening severe bleeding resulting from trauma may raise significant ethical and legal considerations. Researchers studying products for use in such circumstances may need guidance to carry out appropriate consultation with representatives of the communities in which the clinical investigation will be conducted and from which the study participants will be selected. Clinical trials on products intended for use in trauma are also complicated by the difficulty of identifying patients who may meet study inclusion criteria. Given these challenges, further discussion is needed about how products approved for use for treatment of severe bleeding occurring during surgery or due to non-surgical conditions may best be evaluated for use in treatment of severe bleeding in trauma.

The first day of the workshop will include presentations and panel discussions on the following topics: (1) Current clinical scientific knowledge concerning the pathophysiology of trauma and assessment of severe bleeding; (2) currently available locally acting and systemic products used to treat severe bleeding in trauma and non-trauma settings; (3) animal models for pre-clinical evaluation of products; (4) ethical considerations for clinical trials to evaluate products used in treatment of severe bleeding in trauma; and (5) clinical evaluation of products for bleeding interventions, including clinical trials and endpoints. The second day of the workshop will include a discussion of whether products with an indication for use in severe bleeding due to trauma can be evaluated in clinical settings other than a trauma clinical trial and a summary of the sessions presented at the workshop.

Transcripts: Please be advised that as soon as a transcript is available, it can be obtained in either hardcopy or on CD–ROM, after submission of a Freedom of Information request. Written requests are to be sent to Division of Freedom of Information (HFI–35), Office of Management Programs, Food and Drug Administration, 5600 Fishers Lane, rm. 6–30, Rockville, MD 20857. A transcript of the public workshop will be available on the Internet at *http://www.fda.gov/BiologicsBloodVaccines/NewsEvents/Workshops MeetingsConferences/TranscriptsMinutes/default.htm.*

Dated: *October 13, 2010.*

Leslie Kux,

Acting Assistant Commissioner for Policy.

[FR Doc. 2010–26212 Filed 10–18–10; 8:45 am]

BILLING CODE 4160–01–P

DEPARTMENT OF HEALTH AND HUMAN SERVICES

National Institutes of Health

National Institute of Neurological Disorders and Stroke; Notice of Closed Meeting

Pursuant to section 10(d) of the Federal Advisory Committee Act, as amended (5 U.S.C. App.), notice is hereby given of the following meeting.

The meeting will be closed to the public in accordance with the provisions set forth in sections 552b(c)(4) and 552b(c)(6), Title 5 U.S.C., as amended. The grant applications and the discussions could disclose confidential trade secrets or commercial property such as patentable materials, and personal information concerning individuals associated with the grant applications, the disclosure of which would constitute a clearly unwarranted invasion of personal privacy.

Name of Committee: National Institute of Neurological Disorders and Stroke Special Emphasis Panel, SPOTRIAS.

Date: December 15, 2010.

Time: 8 a.m. to 5 p.m.

Agenda: To review and evaluate grant applications.

Place: National Institutes of Health, Neuroscience Center, 6001 Executive Boulevard, Rockville, MD 20852. (Telephone Conference Call.)

Contact Person: Richard D. Crosland, PhD, Scientific Review Administrator, Scientific Review Branch, Division of Extramural Research, NINDS/NIH/DHHS, Neuroscience Center, 6001 Executive Blvd., Room 3208, MSC 9529, Bethesda, MD 20892–9529. 301–496–0635. *Rc218u@nih.gov.*

(Catalogue of Federal Domestic Assistance Program Nos. 93.853, Clinical Research Related to Neurological Disorders; 93.854, Biological Basis Research in the Neurosciences, National Institutes of Health, HHS)

Dated: October 13, 2010.

Jennifer S. Spaeth,

Director, Office of Federal Advisory Committee Policy.

[FR Doc. 2010–26321 Filed 10–18–10; 8:45 am]

BILLING CODE 4140–01–P

DEPARTMENT OF HEALTH AND HUMAN SERVICES

National Institutes of Health

National Institute of Neurological Disorders and Stroke; Notice of Closed Meeting

Pursuant to section 10(d) of the Federal Advisory Committee Act, as amended (5 U.S.C. App.), notice is hereby given of the following meeting.

The meeting will be closed to the public in accordance with the provisions set forth in sections 552b(c)(4) and 552b(c)(6), Title 5 U.S.C., as amended. The contract proposals and the discussions could disclose confidential trade secrets or commercial property such as patentable materials, and personal information concerning individuals associated with the contract proposals, the disclosure of which would constitute a clearly unwarranted invasion of personal privacy.

Name of Committee: National Institute of Neurological Disorders and Stroke Special Emphasis Panel, Medicinal Chemistry.

Date: November 9–10, 2010.

Time: 8 a.m. to 5 p.m.

Agenda: To review and evaluate contract proposals.

Place: Hotel Palomar, 117 South 17th Street, Philadelphia, PA.

Contact Person: Phillip F. Wiethorn, Scientific Review Administrator, DHHS/NIH/NINDS/DER/SRB, 6001 Executive Boulevard, MSC 9529, Neuroscience Center, Room 3203, Bethesda, MD 20892–9529. 301–496–5388. *wiethorp@ninds.nih.gov.*

(Catalogue of Federal Domestic Assistance Program Nos. 93.853, Clinical Research Related to Neurological Disorders; 93.854, Biological Basis Research in the Neurosciences, National Institutes of Health, HHS)

Dated: October 13, 2010.

Jennifer S. Spaeth,

Director, Office of Federal Advisory Committee Policy.

[FR Doc. 2010–26320 Filed 10–18–10; 8:45 am]

BILLING CODE 4140–01–P

DEPARTMENT OF HEALTH AND HUMAN SERVICES

National Institutes of Health

National Institute of Neurological Disorders and Stroke; Notice of Closed Meetings

Pursuant to section 10(d) of the Federal Advisory Committee Act, as amended (5 U.S.C. App.), notice is hereby given of the following meetings.

The meetings will be closed to the public in accordance with the provisions set forth in sections 552b(c)(4) and 552b(c)(6), Title 5 U.S.C., as amended. The grant applications and the discussions could disclose confidential trade secrets or commercial property such as patentable materials, and personal information concerning individuals associated with the grant applications, the disclosure of which would constitute a clearly unwarranted invasion of personal privacy.

Name of Committee: National Institute of Neurological Disorders and Stroke Initial Review Group, Neurological Sciences and Disorders B.

Date: October 28–29, 2010.

Time: 8 a.m. to 6 p.m.

Agenda: To review and evaluate grant applications.

Place: One Washington Circle Hotel, Washington, DC.

Contact Person: Ernest W. Lyons, PhD, Scientific Review Officer, Scientific Review Branch, NINDS/NIH/DHHS, Neuroscience Center, 6001 Executive Blvd., Suite 3208, MSC 9529, Bethesda, MD 20892–9529, 301–496–4056.

This notice is being published less than 15 days prior to the meeting due to the timing limitations imposed by the review and funding cycle.

Name of Committee: National Institute of Neurological Disorders and Stroke Initial Review Group, NST–2 Subcommittee.

Date: November 1–2, 2010.

Time: 8 a.m. to 5 p.m.

Agenda: To review and evaluate grant applications.

Place: Willard InterContinental Washington, 1401 Pennsylvania Avenue, NW., Washington, DC 20004.

Contact Person: JoAnn McConnell, PhD, Scientific Review Officer, Scientific Review Branch, NINDS/NIH/DHHS, Neuroscience Center, 6001 Executive Blvd., Suite 3208, MSC 9529, Bethesda, MD 20892–9529, 301–496–5324, *Mcconnej@ninds.nih.gov.*

This notice is being published less than 15 days prior to the meeting due to the timing limitations imposed by the review and funding cycle.

(Catalogue of Federal Domestic Assistance Program Nos. 93.853, Clinical Research Related to Neurological Disorders; 93.854, Biological Basis Research in the Neurosciences, National Institutes of Health, HHS)

Dated: October 13, 2010.

Jennifer S. Spaeth,

Director, Office of Federal Advisory Committee Policy.

[FR Doc. 2010–26318 Filed 10–18–10; 8:45 am]

BILLING CODE 4140–01–P

DEPARTMENT OF HEALTH AND HUMAN SERVICES

National Institutes of Health

Center for Scientific Review; Notice of Closed Meetings

Pursuant to section 10(d) of the Federal Advisory Committee Act, as amended (5 U.S.C. App.), notice is hereby given of the following meetings.

The meetings will be closed to the public in accordance with the provisions set forth in sections 552b(c)(4) and 552b(c)(6), Title 5 U.S.C., as amended. The grant applications and the discussions could disclose confidential trade secrets or commercial property such as patentable material, and personal information concerning individuals associated with the grant applications, the disclosure of which would constitute a clearly unwarranted invasion of personal privacy.

Name of Committee: Center for Scientific Review Special Emphasis Panel; Small Business: Radiation Therapy and Biology.

Date: November 9–10, 2010.

Time: 8 a.m. to 11 p.m.

Agenda: To review and evaluate grant applications.

Place: National Institutes of Health, 6701 Rockledge Drive, Bethesda, MD 20892 (Virtual Meeting).

Contact Person: Bo Hong, PhD, Scientific Review Officer, Center for Scientific Review, National Institutes of Health, 6701 Rockledge Drive, Room 6194, MSC 7804, Bethesda, MD 20892, 301–435–5879, *hongb@csr.nih.gov.*

Name of Committee: Center for Scientific Review Special Emphasis Panel; Cellular Neuroscience and Drug Discovery.

Date: November 9–10, 2010.

Time: 11 a.m. to 4 p.m.

Agenda: To review and evaluate grant applications.

Place: National Institutes of Health, 6701 Rockledge Drive, Bethesda, MD 20892 (Virtual Meeting).

Contact Person: Geoffrey G. Schofield, PhD, Scientific Review Officer, Center for Scientific Review, National Institutes of Health, 6701 Rockledge Drive, Room 4040–A, MSC 7850, Bethesda, MD 20892, 301–435–1235, *geoffreys@csr.nih.gov.*

Name of Committee: AIDS and Related Research Integrated Review Group;AIDS Clinical Studies and Epidemiology Study Section.

Date: November 16, 2010.

Time: 8 a.m. to 6 p.m.

Agenda: To review and evaluate grant applications.

Place: Marriott Wardman Park Washington, DC Hotel, 2660 Woodley Road, NW., Washington, DC 20008.

Contact Person: Hilary D Sigmon, PhD, Scientific Review Officer, Center for Scientific Review, National Institutes of Health, 6701 Rockledge Drive, Room 5222, MSC 7852, Bethesda, MD 20892, (301) 594–6377, *sigmonh@csr.nih.gov.*

Name of Committee: Center for Scientific Review Special Emphasis Panel; Program Project: Protein Folding, Dynamics and Thermodynamics in Regulation of Transcription.

Date: November 17–19, 2010.

Time: 8 a.m. to 4 p.m.

Agenda: To review and evaluate grant applications.

Place: National Institutes of Health, 6701 Rockledge Drive, Bethesda, MD 20892 (Virtual Meeting).

Contact Person: James W. Mack, PhD, Scientific Review Officer, Center for Scientific Review, National Institutes of Health, 6701 Rockledge Drive, Room 4154, MSC 7806, Bethesda, MD 20892, (301) 435–2037, *mackj2@csr.nih.gov.*

Name of Committee: AIDS and Related Research Integrated Review Group; AIDS Discovery and Development of Therapeutics Study Section.

Date: November 19, 2010.

Time: 8 a.m. to 6 p.m.

Agenda: To review and evaluate grant applications.

Place: Marina del Rey Marriott, 4100 Admiralty Way, Marina del Rey, CA 90292.

Contact Person: Eduardo A Montalvo, PhD, Scientific Review Officer, Center for Scientific Review, National Institutes of Health, 6701 Rockledge Drive, Room 5108, MSC 7852, Bethesda, MD 20892, (301) 435–1168, *montalve@csr.nih.gov.*

Name of Committee: Center for Scientific Review Special Emphasis Panel; PAR–08–261: Emergency Medical Services for Children.

Date: December 7, 2010.

Time: 1 p.m. to 4 p.m.

Agenda: To review and evaluate grant applications.

Place: National Institutes of Health, 6701 Rockledge Drive, Bethesda, MD 20892 (Telephone Conference Call).

Contact Person: Jacinta Bronte-Tinkew, PhD, Scientific Review Officer, Center for Scientific Review, National Institutes of Health, 6701 Rockledge Drive, Room 3164, MSC 7770, Bethesda, MD 20892, (301) 806–0009, *brontetinkewjm@csr.nih.gov.*

Name of Committee: Center for Scientific Review Special Emphasis Panel; Member Conflict: Cancer Therapeutics.

Date: December 9, 2010.

Time: 2 p.m. to 3:30 p.m.

Agenda: To review and evaluate grant applications.

Place: National Institutes of Health, 6701 Rockledge Drive, Bethesda, MD 20892 (Telephone Conference Call).

Contact Person: Malaya Chatterjee, PhD, Scientific Review Officer, Center for Scientific Review, National Institutes of Health, 6701 Rockledge Drive, Room 6192, MSC 7804, Bethesda, MD 20892, (301) 806–2515, *chatterm@csr.nih.gov.*

(Catalogue of Federal Domestic Assistance Program Nos. 93.306, Comparative Medicine; 93.333, Clinical Research, 93.306, 93.333, 93.337, 93.393–93.396, 93.837–93.844, 93.846–93.878, 93.892, 93.893, National Institutes of Health, HHS)

Dated: October 13, 2010.

Jennifer S. Spaeth,

Director, Office of Federal Advisory Committee Policy.

[FR Doc. 2010–26317 Filed 10–18–10; 8:45 am]

BILLING CODE 4140–01–P

DEPARTMENT OF HEALTH AND HUMAN SERVICES

National Institutes of Health

National Institute of Diabetes and Digestive and Kidney Diseases; Notice of Closed Meetings

Pursuant to section 10(d) of the Federal Advisory Committee Act, as amended (5 U.S.C. App.), notice is hereby given of the following meetings.

The meetings will be closed to the public in accordance with the provisions set forth in sections 552b(c)(4) and 552b(c)(6), Title 5 U.S.C., as amended. The grant applications and the discussions could disclose confidential trade secrets or commercial property such as patentable material, and personal information concerning individuals associated with the grant applications, the disclosure of which would constitute a clearly unwarranted invasion of personal privacy.

Name of Committee: National Institute of Diabetes and Digestive and Kidney Diseases Special Emphasis Panel, Ancillary Clinical Studies of Interest to the NIDDK.

Date: November 30, 2010.

Time: 11 a.m. to 12:30 p.m.

Agenda: To review and evaluate grant applications.

Place: National Institutes of Health, Two Democracy Plaza, 6707 Democracy Boulevard, Bethesda, MD 20892. (Telephone Conference Call)

Contact Person: Ann A. Jerkins, PhD, Scientific Review Officer, Review Branch, DEA, NIDDK, National Institutes of Health, 6707 Democracy Blvd, Room 759, MSC 5452, Bethesda, MD 20892–5452, 301–594–2242, *jerkinsa@niddk.nih.gov.*

Name of Committee: National Institute of Diabetes and Digestive and Kidney Diseases Special Emphasis Panel, The NIDDK Conflict Telephone SEP.

Date: December 1, 2010.

Time: 1 p.m. to 4 p.m.

Agenda: To review and evaluate grant applications. *Place:* National Institutes of Health, Two Democracy Plaza, 6707 Democracy Boulevard, Bethesda, MD 20892. (Telephone Conference Call)

Contact Person: Xiaodu Guo, MD, PhD, Scientific Review Officer, Review Branch, DEA, NIDDK, National Institutes of Health, Room 761, 6707 Democracy Boulevard, Bethesda, MD 20892–5452, (301) 594–4719, *guox@extra.niddk.nih.gov.*

(Catalogue of Federal Domestic Assistance Program Nos. 93.847, Diabetes, Endocrinology and Metabolic Research; 93.848, Digestive Diseases and Nutrition Research; 93.849, Kidney Diseases, Urology and Hematology Research, National Institutes of Health, HHS)

Dated: October 13, 2010.

Jennifer S. Spaeth,

Director, Office of Federal Advisory Committee Policy.

[FR Doc. 2010–26316 Filed 10–18–10; 8:45 am]

BILLING CODE 4140–01–P

DEPARTMENT OF HEALTH AND HUMAN SERVICES

Health Resources and Service Administration

Advisory Committee on Interdisciplinary, Community-Based Linkages; Notice of Meeting

In accordance with section 10(a)(2) of the Federal Advisory Committee Act (Pub. L. 92–463), notice is hereby given of the following meeting:

Name: Advisory Committee on Interdisciplinary, Community-Based Linkages (ACICBL).

Dates and Times: December 1, 2010, 11 a.m. to 3 p.m., EST.

Place: Conference Call.

Status: The meeting will be open to the public. The conference call access will be limited only by availability of telephone ports.

Purpose: The members of the ACICBL will begin the planning required to develop the Eleventh Annual Report for the Secretary of the Department of Health and Human Services (the Secretary) and Congress, focusing on a relevant topic that will enhance the mission of the Title VII training programs. The meeting will afford Committee members with the opportunity to review the urgent issues related to the training programs under its purview, identify resources that will address gaps and further strengthen the outcomes from these efforts, and offer recommendations for improvement of these training programs for the Secretary and the Congress.

Agenda: The ACICBL agenda includes an opportunity for each member to offer ideas for the upcoming report along with identifying consultants in specific areas who could provide expert testimony. The staff writer provided by the Health Resources and Services Administration, Bureau of Health Professions will be introduced and given an opportunity to offer a strategy for outlining the upcoming report. Agenda items are subject to change as dictated by the priorities of the Committee.

SUPPLEMENTARY INFORMATION: Requests to make oral comments or to provide written comments to the ACICBL should be sent to Dr. Joan Weiss, Designated Federal Official at the contact information below. Individuals who plan to participate on the conference call should notify Dr. Weiss at least three days prior to the meeting, using the address and phone number below. Members of the public will have the opportunity to provide comments. The meeting phone number is 888–790–1767 and the pass code is ACICBL or 224225. Interested parties should refer to meeting subject as the HRSA Advisory Committee on Interdisciplinary, Community-Based Linkages.

FOR FURTHER INFORMATION CONTACT: Anyone requesting information regarding the ACICBL should contact Dr. Joan Weiss, Designated Federal Official within the Bureau of Health Professions, Health Resources and Services Administration, in one of three ways: (1) Send a request to the following address: Dr. Joan Weiss, Designated Federal Official, Bureau of Health Professions, Health Resources and Services Administration, Parklawn Building, Room 9–36, 5600 Fishers Lane, Rockville, Maryland 20857; (2) call (301) 443–6950; or (3) send an e-mail to *jweiss@hrsa.gov.* In the absence of Dr. Weiss, CAPT Norma J. Hatot, Senior Nurse Consultant, can be contacted via telephone at (301) 443–2681 or by e-mail at *nhatot@hrsa.gov.*

Dated: October 12, 2010.

Wendy Ponton,

Director, Division of Management.

[FR Doc. 2010–26203 Filed 10–18–10; 8:45 am]

BILLING CODE 4165–15–P

DEPARTMENT OF HEALTH AND HUMAN SERVICES

Health Resources and Services Administration

Advisory Committee on Training in Primary Care Medicine and Dentistry; Notice of Meeting

In accordance with section 10(a)(2) of the Federal Advisory Committee Act (Pub. L. 92–463), notice is hereby given of the following meeting:

Name: Advisory Committee on Training in Primary Care, Medicine and Dentistry (ACTPCMD).

Date and Time: November 15, 2010, 8:30 a.m.–4:30 p.m.

November 16, 2010, 8 a.m.–2 p.m.

Place: Hilton Washington DC/Rockville Executive Meeting Center, 1750 Rockville Pike, Rockville, Maryland 20910.

Status: The meeting will be open to the public.

Purpose: The Advisory Committee provides advice and recommendations on a broad range of issues dealing with programs and activities authorized under section 747 of the Public Health Service Act as amended by The Patient Protection and Affordable Care Act, Public Law 111–148. At this meeting the Advisory Committee will work on its ninth report about the primary care pipeline. Reports are submitted to Congress and to the Secretary of the Department of Health and Human Services.

Agenda: The meeting on Monday, November 15 will begin with opening remarks from the Interim Chair of the Advisory Committee and welcoming comments from senior management of the Health Resources and Services Administration. The Advisory Committee will work on its ninth report about revitalizing primary care by priming the primary care pipeline. In both plenary sessions and in small groups, the Advisory Committee will focus on report recommendations and the content of the report. On the first day of the meeting, annual elections will be held for Chair and two Vice Chairs. On Tuesday, November 16, the Advisory Committee will finalize its ninth report and plan for the next Advisory Committee meeting. An opportunity will be provided for public comment.

For further information contact: Anyone interested in obtaining a roster of members or other relevant information should write or contact Jerilyn K. Glass, M.D., Ph.D., Advisory Committee Executive Secretary, Division of Medicine and Dentistry, Bureau of Health Professions, Health Resources and Services Administration, Room 9A–27, Parklawn Building, 5600 Fishers Lane, Rockville, Maryland 20857, Telephone (301) 443–7271. The Web address for information on the Advisory Committee and the November 15–16, 2010 meeting agenda is *http://bhpr.hrsa.gov/medicine-dentistry/actpcmd.*

Dated: October 12, 2010.

Wendy Ponton,

Director, Office of Management.

[FR Doc. 2010–26205 Filed 10–18–10; 8:45 am]

BILLING CODE 4165–15–P

DEPARTMENT OF HEALTH AND HUMAN SERVICES

Health Resources and Services Administration

National Advisory Council on Nurse Education and Practice; Notice of Meeting

In accordance with section 10(a)(2) of the Federal Advisory Committee Act (Pub. L. 92–463), notice is hereby given of the following meetings:

Name: National Advisory Council on Nurse Education and Practice (NACNEP).

Dates and Times: November 17, 2010, 1 p.m.–5 p.m.

November 18, 2010, 8:30 a.m.–4:30 p.m.

November 19, 2010, 8:30 a.m.–4 p.m.

Place: Hilton Washington DC/Rockville Hotel & Executive Meeting Center, 1750 Rockville Pike, Rockville, MD 20852.

Status: The meeting will be open to the public.

Agenda: Agency and Bureau administrative updates will be provided.

Purpose: The purpose of this meeting is to address diversity in nurse education and practice. The objectives of the meeting are to: (1) Articulate the definition, goals and implications of diversification of the nursing workforce; (2) summarize the current data trends and existing information on diversity in the nursing workforce including nursing students; (3) examine existing policies, practices and legal constraints that influence or limit the recruitment of diverse students into the profession of nursing; (4) identify the key elements of successful programs in nursing education that have increased the recruitment and graduation of diverse individuals; and (5) identify the key elements of success in innovative models that have improved the retention, professional development and promotion of diverse individuals within the nursing profession. Experts from professional nursing, public and private organizations will make presentations on a range of issues related to diversity in the nursing workforce and health professions. Day one of the meeting will be devoted to new member orientation. During days two and three of the meeting, the NACNEP council members will deliberate on the content presented on diversity in nurse education and practice. This meeting will form the basis for NACNEP's mandated Eleventh Annual Report to the Secretary of Health and Human Services and the Congress. For further information regarding NACNEP, to obtain a roster of members, minutes of the meeting, or other relevant information, contact Lakisha Smith, Executive Secretary, National Advisory Council on Nurse Education and Practice, Parklawn Building, Room 9B–45, 5600 Fishers Lane, Rockville, Maryland 20857, telephone (301) 443–5688. Information can also be found at the following Web site: *http://bhpr.hrsa.gov/nursing/nacnep.htm.*

Dated: October 12, 2010.

Wendy Ponton,

Director, Office of Management.

[FR Doc. 2010–26204 Filed 10–18–10; 8:45 am]

BILLING CODE 4165–15–P

DEPARTMENT OF HOMELAND SECURITY

U.S. Customs and Border Protection

Notice of Issuance of Final Determination Concerning Fairplay Legacy Electric Vehicles

AGENCY: U.S. Customs and Border Protection, Department of Homeland Security.

ACTION: Notice of final determination.

SUMMARY: This document provides notice that U.S. Customs and Border Protection ("CBP") has issued a final determination concerning the country of origin of the Fairplay Legacy line of golf and recreational electric vehicles. Based upon the facts presented, CBP has concluded in the final determination that the United States is the country of origin of the Fairplay Legacy line of electric vehicles for purposes of U.S. Government procurement.

DATES: The final determination was issued on October 13, 2010. A copy of the final determination is attached. Any party-at-interest, as defined in 19 CFR 177.22(d), may seek judicial review of this final determination on or before November 18, 2010.

FOR FURTHER INFORMATION CONTACT: Heather K. Pinnock, Valuation and Special Programs Branch: (202) 325–0034.

SUPPLEMENTARY INFORMATION: Notice is hereby given that on October 13, 2010, pursuant to subpart B of part 177, Customs Regulations (19 CFR Part 177, subpart B), CBP issued a final determination concerning the country of origin of the Fairplay Legacy line of golf and recreational electric vehicles which may be offered to the U.S. Government under an undesignated government procurement contract. This final determination, in HQ H118435, was issued at the request of Fairplay Electric Cars, LLC ("Fairplay"), under procedures set forth at 19 CFR Part 177, subpart B, which implements Title III of the Trade Agreements Act of 1979, as amended (19 U.S.C. 2511–18). In the final determination, CBP concluded that, based upon the facts presented, the

Fairplay Legacy line of electric vehicles, assembled to completion in the United States from parts made in non-TAA countries and TAA countries and/or the United States, are substantially transformed in the United States, such that the United States is the country of origin of the finished articles for purposes of U.S. Government procurement.

Section 177.29, Customs Regulations (19 CFR 177.29), provides that notice of final determinations shall be published in the **Federal Register** within 60 days of the date the final determination is issued. Section 177.30, CBP Regulations (19 CFR 177.30), provides that any party-at-interest, as defined in 19 CFR 177.22(d), may seek judicial review of a final determination within 30 days of publication of such determination in the **Federal Register**.

Dated: October 13, 2010.

Sandra L. Bell,

Executive Director, Regulations and Rulings, Office of International Trade.

Attachment

HQ H118435

October 13, 2010

CLA–2 OT:RR:CT:VS H118435 HkP

CATEGORY: Marking

Mr. Keith Andrews, President
Fairplay Electric Cars
743 Horizon Ct., Suite 333
Grand Junction, CO 81506

RE: Government Procurement; Country of Origin of Electric Vehicles; Substantial Transformation

Dear Mr. Andrews:

This is in response to your letter dated July 20, 2010, requesting a final determination on behalf of Fairplay Electric Cars, LLC ("Fairplay"), pursuant to subpart B of part 177 of the U.S. Customs and Border Protection Regulations (19 C.F.R. Part 177).

Under these regulations, which implement Title III of the Trade Agreements Act of 1979 (TAA), as amended (19 U.S.C. § 2511 et seq.), CBP issues country of origin advisory rulings and final determinations as to whether an article is or would be a product of a designated country or instrumentality for the purposes of granting waivers of certain "Buy American" restrictions in U.S. law or practice for products offered for sale to the U.S. Government.

This final determination concerns the country of origin of the Fairplay Legacy line of golf and recreational vehicles. We note that as a U.S. importer and manufacturer, Fairplay is a party-at-interest within the meaning of 19 C.F.R. § 177.22(d)(1) and is entitled to request this final determination. In reaching our decision, we have taken into account additional information submitted to this office on August 31, 2010.

FACTS:

The models of vehicles at issue are the following: Legacy Eco 2P, Legacy Eco 2P XR, Legacy Eco 4P, Legacy Deluxe 2P, Legacy Deluxe XR 2P, Legacy Deluxe LTD 2P, Legacy Deluxe HP 2P, and the Legacy Transport.

According to the information submitted, Fairplay imports parts for these vehicles from China. These include chassis, plastic body parts and various miscellaneous pieces of plastic trim, which are assembled together in the United States with U.S.-made battery packs, motors, electronics, wiring assemblies, seats, and chargers. The bill of materials (BOM) submitted with the request indicates that, depending on the model, a vehicle may have between approximately 53 and 62 inputs, when items such as logos/decals, warranty registration cards, and labor are counted along with the parts. Of these, between 12 and 17 inputs are of U.S. origin or are performed in the U.S. Between 44.8% and 53.5% of actual manufacturing costs are attributed to U.S. or TAA country manufacturing operations.

Assembly in the U.S. takes place at five different stations and takes between 11 hours (660 minutes) and 14.25 hours (855 minutes). The operations performed at each assembly station are described as follows:

Station 0: The electronic controller plate is assembled and tested. Approximate assembly time: 90–135 minutes.

Station 1: The chassis is unloaded and given a vehicle identification number. Wheels, tires, and the steering column are installed on the chassis using rivets, nuts, bolts, screws, and plastic push-ins. Approximate assembly time: 180–240 minutes.

Station 2: The batteries, motor, controller, solenoid, wiring harness and other crucial electronic parts are installed using rivets, nuts, bolts, and screws or special Molex connectors and plastic push-ins that must be soldered. Approximate assembly time: 90–120 minutes.

Station 3: The plastic front and rear body, bumpers and dashboard are installed over the chassis and electronic assembly, which gives the vehicle its finished appearance. Parts are attached with rivets, nuts and bolts. The vehicle is then removed from the assembly rack. Approximate assembly time: 150–180 minutes.

Station 4: The deep cycle batteries, upright canopy supports, canopy top, seat bottom and back, seat belts, lights, reflectors, decals, logos and final wiring are installed and tested. The parts are installed using rivets, Molex connectors, nuts, bolts, screws, and/or plastic push-ins, as required. Approximate assembly time: 150–180 minutes.

Testing of the fully assembled vehicle lasts between 90 and 195 minutes, depending on the vehicle. In addition, quality control inspections are performed at each station as well as randomly. Packing and shipping operations last between 30 and 45 minutes. The Standard Operating Procedures to assemble the vehicles are designed by staff engineers, who also select, approve and advise on the appropriate parts to be used for the manufacture of the vehicles.

ISSUE:

What is the country of origin of the Fairplay Legacy line of golf and recreational electric vehicles for purposes of U.S. Government procurement?

LAW AND ANALYSIS:

Pursuant to Subpart B of Part 177, 19 CFR § 177.21 et seq., which implements Title III of the Trade Agreements Act of 1979, as amended (19 U.S.C. § 2511 et seq.), CBP issues country of origin advisory rulings and final determinations as to whether an article is or would be a product of a designated country or instrumentality for the purposes of granting waivers of certain "Buy American" restrictions in U.S. law or practice for products offered for sale to the U.S. Government.

Under the rule of origin set forth under 19 U.S.C. § 2518(4)(B):

An article is a product of a country or instrumentality only if (i) it is wholly the growth, product, or manufacture of that country or instrumentality, or (ii) in the case of an article which consists in whole or in part of materials from another country or instrumentality, it has been substantially transformed into a new and different article of commerce with a name, character, or use distinct from that of the article or articles from which it was so transformed.

See also 19 C.F.R. § 177.22(a).

In rendering advisory rulings and final determinations for purposes of U.S. Government procurement, CBP applies the provisions of subpart B of Part 177 consistent with the Federal Procurement Regulations. *See* 19 C.F.R. § 177.21. In this regard, CBP recognizes that the Federal Procurement Regulations restrict the U.S. Government's purchase of products to U.S.-made or designated country end products for acquisitions subject to the TAA. *See* 48 C.F.R. § 25.403(c)(1). The Federal Procurement Regulations define "U.S.-made end product" as:

[A]n article that is mined, produces, or manufactured in the United States or that is substantially transformed in the United States into a new and different article of commerce with a name, character, or use distinct from that of the article or articles from which it was transformed.

In determining whether the combining of parts or materials constitutes a substantial transformation, the determinative issue is the extent of operations performed and whether the parts lose their identity and become an integral part of the new article. *Belcrest Linens v. United States,* 573 F. Supp. 1149 (Ct. Int'l Trade 1983), *aff'd,* 741 F.2d 1368 (Fed. Cir. 1984). Assembly operations that are minimal or simple, as opposed to complex or meaningful, will generally not result in a substantial transformation. *See* C.S.D. 80–111, C.S.D. 85–25, C.S.D. 89–110, C.S.D. 89–118, C.S.D. 90–51, and C.S.D. 90–97. For example, in C.S.D. 85–25, 19 Cust. Bull. 844 (1985), CBP held that for purposes of the Generalized System of Preferences ("GSP"), the assembly of a large number of fabricated components onto a printed circuit board in a process involving a considerable amount of time and skill resulted in a substantial transformation. In that case, in excess of 50 discrete fabricated components (such as resistors, capacitors, diodes, integrated circuits, sockets, and connectors) were assembled. Whether an operation is complex and meaningful depends on the nature of the

operation, including the number of components assembled, number of different operations, time, skill level required, attention to detail, quality control, the value added to the article, and the overall employment generated by the manufacturing process.

In order to determine whether a substantial transformation occurs when components of various origins are assembled into completed products, CBP considers the totality of the circumstances and makes such determinations on a case-by-case basis. The country of origin of the item's components, extent of the processing that occurs within a country, and whether such processing renders a product with a new name, character, and use are primary considerations in such cases. Additionally, factors such as the resources expended on product design and development, the extent and nature of post-assembly inspection and testing procedures, and worker skill required during the actual manufacturing process will be considered when determining whether a substantial transformation has occurred. No one factor is determinative.

You believe that the assembly operations that take place in the U.S. result in a substantial transformation of the imported parts. You note that these parts, by themselves, cannot function and must be assembled with the U.S.-made parts to constitute a working electric self-propelled vehicle. Given these considerations, you argue that the U.S. content along with the fact that 100% of the assembly operations takes place in the U.S. warrants a determination that the U.S. is the country of origin of the vehicles. In support of your argument, you cite Headquarters Ruling Letter ("HQ") H022169 (May 2, 2008) and HQ 558919 (Mar. 20, 1995).

In HQ H022169, CBP found that an imported mini-truck glider was substantially transformed as a result of assembly operations performed in the United States to produce an electric mini-truck. Our decision was based on the fact that, under the described assembly process, the imported glider lost its individual identity and became an integral part of a new article possessing a new name, character and use. In addition, a substantial number of the components added to the imported glider were of U.S. origin.

In HQ 558919, a country of origin marking case relied upon in HQ H022169, U.S. Customs (now CBP) held that an extruder assembly manufactured in England was substantially transformed in the United States when it was wired and combined with U.S. components (motor, electric controls and extruder screw) to create a vertical extruder. In reaching that decision, Customs emphasized that the imported extruder subassembly and the U.S. components each had important attributes that were functionally necessary to the operation of the extruder. Consequently, we found that the imported subassemblies should be excepted from individual marking, provided that the cartons in which the U.S. manufacturer received them were properly marked with their country of origin.

In both HQ 558919 and HQ H022169, CBP found that assembly of the imported parts together with the U.S. made components were "functionally necessary" to the operation of the finished product. The same is true in this situation. None of the imported parts, on their own, can function as an electric vehicle but must be assembled with other necessary U.S. components, such as the battery pack, motor, electronics, wiring assemblies and charger. Moreover, given the complexity and duration of the U.S. manufacturing process, we consider those operations to be more than mere assembly.

Based on the information before us, and consistent with the CBP rulings cited above, we find that the Chinese-origin chassis, plastic body parts and plastic pieces of trim are substantially transformed by the assembly operations performed in the United States to produce electric vehicles. Under the described assembly process, the imported parts lose their individual identities and become integral parts of a new article possessing a new name, character and use. Further, components crucial to the making of an electric vehicle (the battery pack, motor, electronics, wiring assemblies, and charger) are of U.S. origin. We conclude, based upon these specific facts, that the country of origin of the Fairplay Legacy line of electric vehicles for purposes of U.S. Government procurement is the United States.

HOLDING:

The chassis, plastic body parts and plastic pieces of trim imported from China are substantially transformed when they are assembled in the United States with domestic components. As a result, the country of origin of Fairplay's line of golf and recreational electric vehicles, specifically the Legacy Eco 2P, Legacy Eco 2P XR, Legacy Eco 4P, Legacy Deluxe 2P, Legacy Deluxe XR 2P, Legacy Deluxe LTD 2P, Legacy Deluxe HP 2P, and the Legacy Transport, for purposes of U.S. Government procurement is the United States.

Notice of this final determination will be given in the Federal Register, as required by 19 C.F.R. § 177.29. Any party-at-interest other than the party which requested this final determination may request, pursuant to 19 C.F.R. § 177.31, that CBP reexamine the matter anew and issue a new final determination. Pursuant to 19 C.F.R. § 177.30, any party-at-interest may, within 30 days of publication of the Federal Register Notice referenced above, seek judicial review of this final determination before the Court of International Trade.

Sincerely,

Sandra L. Bell, Executive Director
Regulations and Rulings
Office of International Trade

[FR Doc. 2010–26314 Filed 10–18–10; 8:45 am]

BILLING CODE 9111–14–P

DEPARTMENT OF HOMELAND SECURITY

Federal Emergency Management Agency

[Internal Agency Docket No. FEMA–1940–DR; Docket ID FEMA–2010–0002]

Arizona; Major Disaster and Related Determinations

AGENCY: Federal Emergency Management Agency, DHS.

ACTION: Notice.

SUMMARY: This is a notice of the Presidential declaration of a major disaster for the State of Arizona (FEMA–1940–DR), dated October 4, 2010, and related determinations.

DATES: *Effective Date:* October 4, 2010.

FOR FURTHER INFORMATION CONTACT: Peggy Miller, Office of Response and Recovery, Federal Emergency Management Agency, 500 C Street, SW., Washington, DC 20472, (202) 646–3886.

SUPPLEMENTARY INFORMATION: Notice is hereby given that, in a letter dated October 4, 2010, the President issued a major disaster declaration under the authority of the Robert T. Stafford Disaster Relief and Emergency Assistance Act, 42 U.S.C. 5121 *et seq.* (the "Stafford Act"), as follows:

I have determined that the damage in certain areas of the State of Arizona resulting from severe storms and flooding during the period of July 20 to August 7, 2010, is of sufficient severity and magnitude to warrant a major disaster declaration under the Robert T. Stafford Disaster Relief and Emergency Assistance Act, 42 U.S.C. 5121 *et seq.* (the "Stafford Act"). Therefore, I declare that such a major disaster exists in the State of Arizona.

In order to provide Federal assistance, you are hereby authorized to allocate from funds available for these purposes such amounts as you find necessary for Federal disaster assistance and administrative expenses.

You are authorized to provide Public Assistance in the designated areas and Hazard Mitigation throughout the State. Consistent with the requirement that Federal assistance is supplemental, any Federal funds provided under the Stafford Act for Public Assistance and Hazard Mitigation will be limited to 75 percent of the total eligible costs.

Further, you are authorized to make changes to this declaration for the approved assistance to the extent allowable under the Stafford Act.

The Federal Emergency Management Agency (FEMA) hereby gives notice that pursuant to the authority vested in the Administrator, under Executive Order 12148, as amended, Sandy Coachman, of FEMA is appointed to act as the Federal Coordinating Officer for this major disaster.

The following areas of the State of Arizona have been designated as adversely affected by this major disaster:

Coconino County for Public Assistance.

All counties within the State of Arizona are eligible to apply for assistance under the Hazard Mitigation Grant Program.

(The following Catalog of Federal Domestic Assistance Numbers (CFDA) are to be used for reporting and drawing funds: 97.030, Community Disaster Loans; 97.031, Cora Brown Fund; 97.032, Crisis Counseling; 97.033, Disaster Legal Services; 97.034, Disaster Unemployment Assistance (DUA); 97.046, Fire Management Assistance Grant; 97.048, Disaster Housing Assistance to Individuals and Households In Presidentially Declared Disaster Areas; 97.049, Presidentially Declared Disaster Assistance—Disaster Housing Operations for Individuals and Households; 97.050, Presidentially Declared Disaster Assistance to Individuals and Households—Other Needs; 97.036, Disaster Grants—Public Assistance (Presidentially Declared Disasters); 97.039, Hazard Mitigation Grant.)

W. Craig Fugate,

Administrator, Federal Emergency Management Agency.

[FR Doc. 2010–26211 Filed 10–18–10; 8:45 am]

BILLING CODE 9111–23–P

DEPARTMENT OF HOMELAND SECURITY

Coast Guard

[Docket No. USCG–2010–0212]

Interagency Coordinating Committee on Oil Pollution Research (ICCOPR); Public Meeting

AGENCY: Coast Guard, DHS.

ACTION: Notice of meeting.

SUMMARY: The Interagency Coordinating Committee on Oil Pollution Research (ICCOPR) will hold a public meeting in New Orleans, LA to hear comments on the priorities of oil pollution research, including projects related to the Deepwater Horizon incident and the Arctic environment. This meeting is designed to give the public an opportunity to provide statements as to where the ICCOPR, a federally mandated committee, should focus their efforts concerning oil pollution research. Public comment will then be used to augment the revision of the 1997 Oil Pollution Research and Technology Plan. This meeting will be open to the public.

DATES: The Committee will meet on Wednesday, November 17, 2010, from 9 a.m. to 12 a.m. (noon). This meeting may close early if all business is finished. Written material (no more than 2 full pages) and requests to make brief oral presentations should reach the Coast Guard on or before November 12, 2010. Requests to have a copy of your material (no more than 2 full pages) distributed to each member of the committee should reach the Coast Guard on or before November 12, 2010.

ADDRESSES: The Committee will meet in the Pisces Room at the Audubon Aquarium of the Americas, Canal Street at the River, #1 Canal Street, New Orleans, Louisiana 70130. Send written material (no more than 2 full pages) and requests to make brief oral presentations to Lieutenant Tracy Wirth, Assistant to the Chairman of the ICCOPR at Commandant (CG–533), Office of Incident Management and Preparedness, U.S. Coast Guard, 2100 2nd St., SW., STOP 7363, Washington, DC 20593–7363. The ICCOPR staff can also be contacted via e-mail at *ICCOPR_staff@uscg.mil.* This notice and documents identified in the **SUPPLEMENTARY INFORMATION** section as being available in the docket, may be viewed in our online docket, USCG–2010–0212, at *http://www.regulations.gov.*

FOR FURTHER INFORMATION CONTACT: If you have questions on this notice or the meeting, contact Lieutenant Tracy Wirth, Assistant to the Chairman of the ICCOPR, telephone 202–372–2236 or via e-mail at *ICCOPR_staff@uscg.mil.*

If you have questions on viewing the docket, call Renee V. Wright, Program Manager, Docket Operations, telephone 202–366–9826.

SUPPLEMENTARY INFORMATION:

Background and Purpose

Section 7001(a) of the Oil Pollution Act of 1990 (OPA 90) established the Interagency Coordinating Committee on Oil Pollution Research. The purpose of the Interagency Committee is twofold: (1) To prepare a comprehensive, coordinated Federal oil pollution research and development (R&D) plan; and (2) to promote cooperation with industry, universities, research institutions, state governments, and other nations through information sharing, coordinated planning, and joint funding of projects. The Interagency Committee was commissioned with 13 members and is chaired by the Coast Guard. Membership includes:

—National Oceanic and Atmospheric Administration (NOAA)
—National Institute of Standards and Technology (NIST)
—Department of Energy (DOE)
—Bureau of Ocean Energy Management, Regulation, and Enforcement (BOEMRE)—formally known as MMS
—United States Fish and Wildlife Service (USFWS)
—Maritime Administration (MARAD)
—Pipeline and Hazardous Materials Safety Administration (PHMSA)
—United States Army Corps of Engineers (USACE)
—United States Navy (USN)
—Environmental Protection Agency (EPA)
—National Aeronautics and Space Administration (NASA)
—United States Coast Guard (USCG)
—Federal Emergency Management Agency (FEMA), United States Fire Administration (USFA)

Section 7001(b) of the Oil Pollution Act of 1990 required the Interagency Committee to prepare an Oil Pollution Research and Technology Plan. The Interagency Committee prepared the original Oil Pollution Research and Development (R&D) Technology Plan to define the roles of each Federal agency involved in oil spill research and development. The plan was submitted to Congress in April 1992 and later reviewed by the National Research Council's Committee on Oil Spill Research and Development under the auspices of the Marine Board. Using input from the Marine Board, the Committee revised the plan in May 1993 to address spill prevention, human factors, and the field testing/demonstration of developed response technologies. The current version of the plan, still based on Marine Board recommendations, is dated April 1997. The Interagency Committee is coordinating an update of the Technology Plan during the next two fiscal years.

Tentative Meeting Agenda

The agenda for the November 17, 2010 Committee meeting is as follows:

(1) 9 a.m.: Convene: Welcome and Opening Comments by the ICCOPR Chairman; Captain John Caplis, U.S. Coast Guard

(2) 9:15 a.m.: ICCOPR Background and Overview Brief

(3) 9:45 a.m.: Public Comment Period

(4) 11:45 a.m.: Closing Remarks: Captain John Caplis, U.S. Coast Guard, Chairman

(5) 12 a.m. (noon): Adjourn

ICCOPR Biennial Report

The Interagency Coordinating Committee on Oil Pollution Research Biennial Report for Fiscal Years 2008 and 2009 and the 1997 Oil Pollution Research and Technology Plan documents, which will be discussed by the Committee, may be viewed in our online docket. Go to *http://www.regulations.gov,* enter the docket

number for this notice (USCG–2010–0212) in the "Keyword" box, and then click "Search."

Procedural

This meeting is open to the public. Please note that the meeting may close early if all business is finished. At the Chair's discretion, members of the public may make brief oral presentations during the meeting. If you would like to make an oral presentation at a meeting, please notify the Assistant to the Chairman no later than November 12, 2010. Written material (no more than 2 full pages) for distribution at the meeting should reach the Coast Guard no later than November 12, 2010. If you would like a copy of your material (no more than 2 full pages) distributed to each member of the committee in advance of the meeting, please submit 25 copies to the Assistant to the Chairman no later than November 12, 2010.

The transcript of the meeting, including all comments received during the meeting, will be posted to *http://www.regulations.gov* and will include any personal information you have provided. You may review a Privacy Act notice regarding our public dockets in the January 17, 2008, issue of the **Federal Register** (73 FR 3316).

Information on Services for Individuals With Disabilities

For information on facilities or services for individuals with disabilities or to request special assistance at the meeting, contact the Chairman as soon as possible.

Authority: This notice is issued under authority of 5 U.S.C. 552(a).

Dated: October 14, 2010.

J.R. Caplis,

Captain, U.S. Coast Guard, Chief, Office of Incident Management & Preparedness.

[FR Doc. 2010–26287 Filed 10–18–10; 8:45 am]

BILLING CODE 9110–04–P

DEPARTMENT OF HOUSING AND URBAN DEVELOPMENT

[Docket No. FR–5447–N–01]

Notice of Formula Allocations and Program Requirements for Neighborhood Stabilization Program Formula Grants

AGENCY: Office of the Secretary, HUD.

ACTION: Notice of allocation method, waivers granted, alternative requirements applied, and statutory program requirements.

SUMMARY: This notice advises the public of the allocation formula and allocation amounts, the list of grantees, alternative requirements, and the waivers of regulations granted to grantees under Section 2301(b) of the Housing and Economic Recovery Act of 2008 (Pub. L. 110–289, approved July 30, 2008) (HERA), as amended, and an additional allocation of funds provided under Section 1497 of the Wall Street Reform and Consumer Protection Act of 2010 (Pub. L. 111–203, approved July 21, 2010) (Dodd-Frank Act) for additional assistance in accordance with the second undesignated paragraph under the heading 'Community Planning and Development—Community Development Fund' in Title XII of Division A of the American Recovery and Reinvestment Act of 2009 (Pub. L. 111–5, approved February 17, 2009) (Recovery Act), as amended, for the purpose of assisting in the redevelopment of abandoned and foreclosed homes. Except where provided for otherwise, these amounts are distributed based on funding formulas for such amounts established by the Secretary in accordance with HERA.

The additional allocation represents the third round of Neighborhood Stabilization Program funding and is referred to throughout this notice as NSP3. HERA provided a first round of formula funding to States and units of general local government, and is referred to herein as NSP1. The Recovery Act provided a second round of funds awarded by competition and is referred to herein as NSP2. The three rounds of funding are collectively referred to as NSP. As described in the Supplementary Information section of this notice, HUD is authorized by statute to specify alternative requirements and make regulatory waivers for this purpose. This notice also notes statutory issues affecting program design and implementation.

Note: This notice is intended to provide unified program requirements for grantees of the two formula NSP grant programs, NSP1 and NSP3. The allocation and application information under Section I.A and Section II.B below is only applicable to NSP3 grants. For NSP1, HUD awarded grants to a total of 309 grantees including the 55 states and territories and selected local governments to stabilize communities hardest hit by foreclosures and delinquencies. For the allocation formula and application process for NSP1, please see the October 6, 2008 **Federal Register** Notice (73 FR 58330), as amended by the June 19, 2009 "Bridge" Notice (74 FR 29223), and Appendix A attached hereto. For NSP2, HUD awarded a combined total $1.93 billion in NSP2 grants to 56 grantees nationwide on January 14, 2010. Funds under NSP2 were distributed by competition under criteria described in the May 4, 2009 Notice of Funding Availability. Where requirements differ between the rounds of funding, it is so noted.

DATES: *Effective Date:* October 19, 2010.

FOR FURTHER INFORMATION CONTACT: Stanley Gimont, Director, Office of Block Grant Assistance, Department of Housing and Urban Development, 451 Seventh Street, SW., Room 7286, Washington, DC 20410, telephone number 202–708–3587. Persons with hearing or speech impairments may access this number via TTY by calling the Federal Information Relay Service at 800–877–8339. FAX inquiries may be sent to Mr. Gimont at 202–401–2044. (Except for the "800" number, these telephone numbers are not toll-free.)

SUPPLEMENTARY INFORMATION:

Program Background and Purpose

Recipients will use the funds awarded under this notice to stabilize neighborhoods whose viability has been, and continues to be, damaged by the economic effects of properties that have been foreclosed upon and abandoned. In 2008, Congress appropriated funds for neighborhood stabilization under HERA. In 2009, Congress appropriated additional neighborhood stabilization funds under the Recovery Act. In 2010, Congress appropriated a third round of neighborhood stabilization funds in the Dodd-Frank Act.

When referring to a provision of the first appropriations statute, this notice will refer to HERA; when referring to a provision of the second appropriations statute, this notice will refer to the Recovery Act; and when referring to the third appropriations statute this notice will refer to the Dodd-Frank Act. When referring to the grants, grantees, assisted activities, and implementation rules under the Dodd-Frank Act, this notice will use the term "NSP3." When referring to the grants, grantees, assisted activities, and implementation rules under the Recovery Act, this notice will use the term "NSP2". When referring to the grants, grantees, assisted activities, and implementation rules under HERA, this notice will use the term "NSP1." Collectively, the grants, grantees, assisted activities, and implementation rules under these three rounds of funding is referred to as NSP. NSP is a component of the Community Development Block Grant (CDBG) program (authorized under Housing and Community Development Act of 1974, as amended (42 U.S.C. 5301 *et seq.*) (HCD Act)).

Program Principles

Programs under NSP should aim to integrate the following principles:

• Retain CDBG distinctive requirements. Congress gave HUD broad waiver and alternative requirement authority, which HUD used in designing NSP program requirements. However, distinctive characteristics of the CDBG program including the objectives of the HCD Act, financial accountability, local citizen participation and information, grantee selection of activities within broad Federal policy parameters, and income targeting of beneficiaries were retained. All of these elements are required in NSP1, NSP2, and NSP3.

• Target and reconnect neighborhoods. Invest funds in programs and projects that will revitalize targeted neighborhood(s) and reconnect those targeted neighborhoods with the economy, housing market, and social networks of the community and metropolitan area as a whole.

• Rapidly arrest decline. Support NSP uses and activities that will rapidly arrest the decline of a targeted neighborhood(s) that has been negatively affected by abandoned or foreclosed properties.

• Assure compliance with the NSP "deep targeting" requirement. No less than 25 percent of the funds shall be used to house individuals and families whose incomes do not exceed 50 percent of area median income.

• Ensure longest feasible continued affordability. Invest in affordable housing that will remain desirable and affordable for the longest feasible period.

• Support projects that optimize economic activity, and the number of jobs created or retained or that will provide other long-term economic benefits.

• Build inclusive and sustainable communities free from discrimination.

• Coordinate planning and resources. Integrate neighborhood stabilization programs with other Federal policy priorities and investments, including energy conservation and efficiency, sustainable and transit-oriented development, integrated metropolitan area-wide planning and coordination, improvements in public education, and access to healthcare.

• Leverage resources and remove destabilizing influences. Augment neighborhood stabilization programs with other Federal, public and private resources. Eliminate destabilizing influences, such as blighted homes, that can prevent programs from producing results.

• Set goals. Set aggressive, but achievable, goals for outputs and outcomes.

• Ensure accountability. Ensure accountability for all programs, keep citizens actively informed, and provide all required NSP reporting elements.

Objectives and Outcomes

1. *Objectives.* The primary objective of the CDBG program is the development of viable urban communities, by providing decent housing, a suitable living environment, and economic opportunity, principally for persons of low- and moderate-income. NSP grantees must strive to meet this objective in neighborhoods that are in decline (or further decline) due to the negative effects of a high number and percentage of homes that have been foreclosed upon. The first goal is to arrest the decline. Then the grantee must stabilize the neighborhood and position it for a sustainable role in a revitalized community.

2. *Outcomes.* Measurable NSP short term program outcomes may include, but are not limited to:

• Arresting decline in home values based on average sales price in targeted neighborhoods, and

• Reduction or elimination of vacant and abandoned residential property in targeted neighborhoods.

The long term outcomes may include, but are not limited to:

• Increased sales of residential property in targeted neighborhoods, and

• Increased median market values of real estate in targeted neighborhoods.

Authority To Provide Alternative Requirements and Grant Regulatory Waivers

The Dodd-Frank Act states that, except where provided for otherwise, assistance shall be provided in accordance with the same provisions applicable under the NSP2 authorization. In turn, the Recovery Act provides that assistance shall be made available as authorized under HERA. The Recovery Act authorizes the Secretary to specify waivers and alternative requirements for any provision of any statute or regulation in connection with the obligation by the Secretary or the use of funds except for requirements related to fair housing, nondiscrimination, labor standards, and the environment (including lead-based paint), upon a finding that such a waiver is necessary to expedite or facilitate the use of such funds.

The Secretary finds that the following alternative requirements are necessary to expedite the use of these funds for their required purposes.

Except as described in this notice, statutory and regulatory provisions governing the CDBG program, including those at 24 CFR part 570 subpart I for states, and those at 24 CFR part 570 subparts A, C, D, J, K, and O for CDBG entitlement communities, as appropriate, shall apply to the use of these funds. The State of Hawaii will be allocated funds and will be subject to part 570, subpart I, as modified by this notice. Other sections of the notice provide further details of the changes, the majority of which deal with adjustments necessitated by statutory provisions, simplify program rules to expedite administration, or relate to the ability of state grantees to act directly instead of solely through distribution to local governments. Additional guidance and technical assistance will be available at *http://www.hud.gov/nspta.*

Table of Contents

I. Allocations
A. Formula: NSP3 Allocation
B. Formula: Reallocation
II. Alternative Requirements and Regulatory Waivers
A. Definitions for Purposes of the CDBG Neighborhood Stabilization Program
B. NSP3 Pre-Grant Process
1. General
2. Contents of an NSP Action Plan Substantial amendment or abbreviated plan
3. Continued affordability
4. Citizen participation alternative requirement
5. Joint requests
6. Effect of existing cooperation agreements governing joint programs and urban counties
C. Reimbursement for Pre-Award Costs
D. Grantee Capacity and Grant Conditions
E. Income Eligibility Requirement Changes
F. State Distribution to Entitlement Communities and Indian Tribes
G. State's Direct Action
H. Eligibility and Allowable Costs
I. Rehabilitation Standards
J. Sale of Homes
K. Acquisition and Relocation
L. Note on Eminent Domain
M. Timeliness of Use and Expenditure of NSP Funds
N. Alternative Requirement for Program Income (Revenue) Generated by Activities Assisted With Grant Funds
O. Reporting
P. FHA First Look
Q. Purchase Discount
R. Removal of Annual Requirements
S. Affirmatively Furthering Fair Housing
T. Certifications
U. Additional NSP3 Requirements—Preferences for Rental Housing and Local Hiring
V. Note on Statutory Limitation on Distribution of Funds
W. Information Collection Approval Note
X. Duration of Funding

I. Allocations

A. *Formula:* Allocation. Grants awarded under NSP1 were allocated to States and local governments according to the formula described in Attachment A. The Dodd-Frank Act makes available an additional $1 billion that is generally to be construed as CDBG program funds (NSP3) for the communities and in the amounts listed in Attachment B to this notice.

B. *Formula:* Reallocation.

1.a. *Failure to Apply (NSP3).* To expedite the use of NSP3 funds, the Department is specifying alternative requirements to 42 U.S.C. 5306(c). If a unit of general local government receiving an allocation of NSP3 funds under this notice (as designated in Attachment B) fails to submit a substantially complete application for its grant allocation by March 1, 2011, or submits an application for less than the total allocation amount, HUD will notify the jurisdiction of the cancellation of all or part of its allocation amount and proceed to reallocate the funds to the state in which the jurisdiction is located.

b. If a state or insular area receiving an allocation of funds under this notice fails to submit a substantially complete application for its allocation by March 1, 2011, or submits an application for less than the total allocation amount, HUD will notify the state or insular area of the reduction in its allocation amount and proceed to reallocate the funds to the 10 highest-need states based on original rankings of need.

2.a. *Failure to Meet 18-Month Obligation Deadline (NSP1).* Consistent with the August 23, 2010 Notice of NSP Reallocation Process Changes (Docket No. FR–5435–N–01), HUD will block each grantee's ability to obligate NSP1 grant funds in the Disaster Recovery Grant Reporting System (DRGR) on the first business day after the statutory 18-month deadline for use of funds. HUD will notify the grantee of this action by electronic mail. Grantees will not be able to obligate grant funds after the deadline without requesting and receiving permission from HUD, and HUD determines that the grantee is not high risk consistent with this notice. The grantee will still be able to expend grant funds obligated before the deadline. Receipt and use of any program income will also be unaffected.

b. Grantees that fail to obligate an amount equal to or greater than its initial grant amount may submit information to HUD, for up to 30 days following its 18-month deadline, documenting any additional obligation of funds not already recorded in the DRGR system and demonstrating to HUD that the obligation occurred on or before the 18-month deadline. Before the 18-month deadline, each grantee should also review its recorded obligations and notify HUD within 30 days following the deadline of any necessary adjustments to the amount and the reason for such an adjustment. For example, the grantee has become aware that an obligation amount that was previously recorded for an acquisition will not proceed, therefore a downward adjustment is necessary.

c. After the deadline, if a grantee needs to decrease or increase the amount of grant funds obligated to an activity, it must first ask HUD to remove the DRGR block on changing the amount obligated. If the amount of decrease is more than 15 percent of the obligation for any activity, the grantee must submit to HUD a written request that clearly demonstrates with compelling information that factors beyond the grantee's reasonable control caused the need to adjust after the deadline. If HUD agrees to grant the request, it will restore the grantee's ability to obligate grant funds in DRGR. If HUD does not grant the request, the grantee must either complete the activity as originally obligated or the amount previously obligated for that activity will be recaptured. HUD may also remove the obligations block following risk assessment of the grantee or a review of some or all of a grantee's obligation documentation.

d. Before HUD determines the appropriate corrective action or recaptures grant funds, HUD will review the submitted information, consider the grantee's capacity as described in 24 CFR 570.905 and 24 CFR 570.493, and the grantee's continuing need for the funds.

e. Following the review and consistent with the procedures described in 24 CFR 570.900(b), HUD will proceed to notify the grantee of the selected corrective action it is required to undertake.

f. HUD will recapture and reallocate up to $19.6 million from any state grantee with unused NSP1 grant funds. Additional corrective actions may be taken related to any amount of unused funds greater than $19.6 million.

g. HUD will reallocate recaptured NSP1 grant funds in accordance with the reallocation formula described in a separate reallocation notice. A grantee receiving a reallocation must apply for the grant in accordance with the NSP1 Notice or this notice, as applicable. A nonentitlement grantee that is not required to submit a consolidated plan to HUD under the CDBG program will prepare an abbreviated plan. The substance of an abbreviated plan must include all the required elements that entitlement communities provide as part of an NSP Action Plan substantial amendment as described under Section II.B.2 of the NSP1 Notice or this Notice, as applicable.

h. Each grantee must meet the statutory requirement to expend 25 percent of its grant amount for activities that will provide housing for households whose income is at or under 50 percent of area median income. This cannot occur unless the funds are first obligated to activities for this purpose, or program income is received and used for eligible activities. Therefore, if a grantee fails to obligate or record program income use of at least 25 percent of its original grant amount for activities that will provide housing for households whose income is at or under 50 percent of area median income, HUD may issue a concern or a finding of noncompliance. Consistent with the procedures described in 24 CFR 570.900(b), HUD will require as a corrective action that the grantee either adjust its remaining NSP1 planned activities to ensure that 25 percent of the original NSP1 formula grant amount and program income supports activities providing housing to households with incomes at or under 50 percent of area median income, or make a firm commitment to provide such housing with nonfederal funds in an amount sufficient to offset any deficiency to comply with the requirement before the expenditure deadline for the NSP1 grant.

i. The NSP1 Notice allows each grantee to use up to 10 percent of its NSP1 grant for general administration and planning activities. If HUD recaptures funds from a grant, this percentage limitation will still apply to the remaining grant funds, reducing the amount available for administration activities.

3. *Failure to Meet Expenditure Deadline for NSP3.*

NSP3 grantees must expend 50 percent of their grants within 2 years and 100 percent of their grants within 3 years. HUD will recapture and reallocate the amount of funds not expended by those deadlines or provide for other corrective action(s) or sanction. Further guidance will be issued prior to the deadline.

II. Alternative Requirements and Regulatory Waivers

This section of the notice briefly provides a justification for alternative requirements, where additional explanation is necessary, and describes

the necessary basis for each regulatory waiver. This section also highlights some of the statutory requirements applicable to the grants. This background narrative is followed by the NSP requirements. While program requirements across the three rounds of NSP funding are similar, certain requirements differ in accordance to statutory provisions.

Each grantee eligible for an NSP grant that already receives annual CDBG allocations has carried out needs hearings, has a consolidated plan, an annual action plan, a citizen participation plan, a monitoring plan, an analysis of impediments to fair housing choice, and has made CDBG certifications. The consolidated plan already discusses housing needs related to up to four major grant programs: CDBG, HOME, Emergency Shelter Grants (ESG), and Housing Opportunities for Persons with AIDS (HOPWA). A grantee's annual action plan describes the activities budgeted under each of those annual programs.

HUD is treating a state and entitlement grantee's use of its NSP grant to be a substantial amendment to its current approved consolidated plan and 2010 annual action plan. The NSP grant is a special CDBG allocation to address the problem of abandoned and foreclosed homes. Treating NSP3 as a substantial amendment will expedite the distribution of NSP3 funds, while ensuring citizen participation on the specific use of the funds. HUD is waiving the consolidated plan regulations on the certification of consistency with the consolidated plan to the extent necessary to mean NSP funds will be used to meet the congressionally identified needs of abandoned and foreclosed homes in the targeted areas set forth in the grantee's substantial amendment. In addition, HUD is waiving the consolidated plan regulations to the extent necessary to adjust reporting to fit the requirements of HERA and the use of DRGR.

Non-entitlement local government grantees receiving NSP3 funds that are not required to submit a consolidated plan to HUD under the CDBG program will prepare an abbreviated plan. The substance of an abbreviated plan must include all the required elements that entitlement communities provide as part of an NSP Action Plan substantial amendment as described under Section II.B.2.

The waivers, alternative requirements, and statutory changes apply only to the grant funds appropriated under NSP and not to the use of regular formula allocations of CDBG, even if they are used in conjunction with NSP funds for a project. They provide expedited program implementation and implement statutory requirements unique to the covered NSP appropriations.

A. Definitions for Purposes of the Neighborhood Stabilization Program

Background

Certain terms are used in HERA that are not used in the regular CDBG program, or the terms are used differently in HERA and the HCD Act. In the interest of clarity of administration, HUD is defining these terms in this notice for all grantees, including states. For the same reason, HUD is also defining eligible fund uses for all grantees, including states. States may define other program terms under the authority of 24 CFR 570.481(a), and will be given maximum feasible deference in accordance with 24 CFR 570.480(c) in matters related to the administration of their NSP programs.

Requirement

Abandoned. A home or residential property is abandoned if either (a) mortgage, tribal leasehold, or tax payments are at least 90 days delinquent, or (b) a code enforcement inspection has determined that the property is not habitable and the owner has taken no corrective actions within 90 days of notification of the deficiencies, or (c) the property is subject to a court-ordered receivership or nuisance abatement related to abandonment pursuant to state or local law or otherwise meets a state definition of an abandoned home or residential property.

Blighted structure. A structure is blighted when it exhibits objectively determinable signs of deterioration sufficient to constitute a threat to human health, safety, and public welfare.

CDBG funds. CDBG funds means, in addition to the definition at 24 CFR 570.3, grant funds distributed under this notice.

Current market appraised value. The current market appraised value means the value of a foreclosed upon home or residential property that is established through an appraisal made in conformity with either: (1) The appraisal requirements of the URA at 49 CFR 24.103, or (2) the Uniform Standards of Professional Appraisal Practice (USPAP), or (3) the appraisal requirements of the Federal Housing Administration (FHA) or a government sponsored enterprise (GSE); and the appraisal must be completed or updated within 60 days of a final offer made for the property by a grantee, subrecipient, developer, or individual homebuyer. However, if the anticipated value of the proposed acquisition is estimated at $25,000 or less, the current market appraised value of the property may be established by a valuation of the property that is based on a review of available data and is made by a person the grantee determines is qualified to make the valuation.

Date of Notice of Foreclosure. For purposes of the NSP tenant protection provisions described at Section K, the date of notice of foreclosure shall be deemed to be the date on which complete title to a property is transferred to a successor entity or person as a result of an order of a court or pursuant to provisions in a mortgage, deed of trust, or security deed. If none of these events occur in the acquisition of a foreclosed property (e.g. in a short sale), in order to ensure fair and equitable treatment of *bona fide* tenants and consistency with the NSP definition of foreclosed, the date of notice of foreclosure shall be deemed to be the date on which the property is acquired for the NSP-assisted project. **Note:** This definition does not affect or otherwise alter the definition of "foreclosed" as provided in this notice.

Foreclosed. A home or residential property has been foreclosed upon if any of the following conditions apply: (a) The property's current delinquency status is at least 60 days delinquent under the Mortgage Bankers of America delinquency calculation and the owner has been notified; (b) the property owner is 90 days or more delinquent on tax payments; (c) under state, local, or tribal law, foreclosure proceedings have been initiated or completed; or (d) foreclosure proceedings have been completed and title has been transferred to an intermediary aggregator or servicer that is not an NSP grantee, contractor, subrecipient, developer, or end user.

Land bank. A land bank is a governmental or nongovernmental nonprofit entity established, at least in part, to assemble, temporarily manage, and dispose of vacant land for the purpose of stabilizing neighborhoods and encouraging re-use or redevelopment of urban property. For the purposes of NSP, a land bank will operate in a specific, defined geographic area. It will purchase properties that have been foreclosed upon and maintain, assemble, facilitate redevelopment of, market, and dispose of the land-banked properties. If the land bank is a governmental entity, it may also maintain foreclosed property that it does not own, provided it charges the owner of the property the full cost

of the service or places a lien on the property for the full cost of the service.

Subrecipient. Subrecipient shall have the same meaning as at the first sentence of 24 CFR 570.500(c). This includes any nonprofit organization (including a unit of general local government) that a state awards funds to.

Use (for the purposes of HERA section 2301(c)(1)). Funds are used when they are obligated by a state, unit of general local government, or any subrecipient thereof, for a specific NSP activity; for example, for acquisition of a specific property. Funds are obligated for an activity when orders are placed, contracts are awarded, services are received, and similar transactions have occurred that require payment by the state, unit of general local government, or subrecipient during the same or a future period. Note that funds are not obligated for an activity when subawards *(e.g.,* grants to subrecipients or to units of local government) are made.

Vicinity. For the purposes of NSP3, HUD defines "vicinity" as each neighborhood identified by the NSP3 grantee as being the areas of greatest need.

B. NSP3 Pre-Grant Process

Background

With this notice, HUD is establishing the NSP3 allocation formula, including reallocation provisions, and announcing the distribution of funds. CDBG grantees receiving NSP3 allocations may immediately begin to prepare and submit action plan substantial amendments for NSP3 funds, in accordance with this notice. (Insular areas should follow the requirements for entitlement communities.) Non-entitlement local government grantees will follow entitlement requirements except for the submission of an abbreviated plan rather than a substantial amendment or as otherwise explained in this notice.

To receive NSP3 funding, each grantee listed in Attachment B must submit an action plan substantial amendment or abbreviated plan to HUD in accordance with this notice by March 1, 2011.

HUD encourages each grantee to carry out its NSP activities in the context of a comprehensive plan for the community's vision of how it can make its neighborhoods not only more stable, but also more sustainable, inclusive, competitive, and integrated into the overall metropolitan fabric, including access to transit, affordable housing, employers, and services. HUD also encourages grantees to incorporate green and sustainable development practices, such as the examples in Attachment C.

HUD encourages each local jurisdiction receiving an allocation to carefully consider its administrative capacity to use the funds within the statutory deadline.

Jurisdictions may cooperate to carry out their grant programs through a joint request to HUD. HUD is providing regulatory waivers and alternative requirements to allow joint requests among units of general local government and to allow joint requests between units of general local government and a state. Any two or more contiguous units of general local government that are in the same metropolitan area and that are eligible to receive an NSP grant may instead make a joint request to HUD to implement a joint NSP program. A jurisdiction need not have a joint agreement with an urban county under the regular CDBG entitlement program to request a joint program for NSP funding. Similarly, any community eligible to receive an NSP grant may instead make a request for a joint NSP program with its state. An NSP joint request under a cooperation agreement results in a single combined grant and a single action plan substantial amendment. Potential requestors should contact HUD as soon as possible (as far as possible in advance of publishing a proposed NSP substantial amendment) for technical guidance. The requestors will specify which jurisdiction will receive the funds and administer the combined grant on behalf of the requestors; in the case of a joint request between a local government jurisdiction and a state, the state will administer the combined grant. (Grantees choosing this option should consider the Consolidated Plan and citizen participation implications of this approach. The lead entity's substantial amendment or abbreviated plan will cover any participating members. The citizen participation process must include citizens of all jurisdictions participating in the joint NSP program, not just those of the lead entity.)

Given the rule of construction in HERA that NSP funds generally are construed as CDBG program funds, subject to CDBG program requirements, HUD generally is treating NSP3 funds as a special allocation of Fiscal Year (FY) 2010 CDBG funding. This has important consequences for local governments presently participating in an existing urban county program, and for metropolitan cities that have joint agreements with urban counties. HUD will consider any existing cooperation agreements between a local government and an urban county governing FY2010 CDBG funding (for purposes of either an urban county or a joint program) to automatically cover NSP funding as well. These cooperation agreements will continue to apply to the use of NSP funds for the duration of the NSP grant, just as cooperation agreements covering regular CDBG Entitlement program funds continue to apply to any use of the funds appropriated during the 3-year period covered by the agreements. For example, a local government presently has a cooperation agreement covering a joint program or participation in an urban county for Federal FYs 2009, 2010 and 2011. The local government may choose to discontinue its participation with the county at the end of the applicable qualification period for purposes of regular CDBG entitlement funding. However, the county will still be responsible for any NSP3 projects funded in that community, and for any NSP3 funding the local government receives from the county, until those funds are expended and the funded activities are completed.

A third method of cooperating is also available. A jurisdiction may choose to apply for its entire grant, and then enter into a subrecipient agreement with another jurisdiction or nonprofit entity to administer the grant. In this manner, for example, all of the grantees operating in a single metropolitan area could designate the same land-bank entity (or the state housing finance agency) as a subrecipient for some or all of their NSP activities.

Each NSP3 grantee will have until March 1, 2011, to complete and submit a substantial amendment to its annual action plan or an abbreviated plan. A grantee that wishes to submit its action plan amendment to HUD electronically in the DRGR system rather than by paper may do so by contacting its local field office for the DRGR submission directions. Paper submissions to HUD also will be allowed, although each grantee must set up its action plan in DRGR prior to the deadline for the first required performance report after receiving a grant.

HUD encourages grantees, during development of their action plan amendments or abbreviated plans, to contact HUD field offices for guidance in complying with these requirements, or if they have any questions regarding meeting grant requirements.

Normally, in the CDBG program, a grantee takes at least 30 days soliciting comment from its citizens before it submits an annual action plan to HUD, which then has 45 days to accept or reject the plan. To expedite the process and to ensure that the NSP grants are

awarded in a timely manner, while preserving reasonable citizen participation, HUD is waiving the requirement that the grantee follow its citizen participation plan for this substantial amendment. HUD is shortening the minimum time for citizen comments and requiring the substantial amendment or abbreviated plan to be posted on the grantee's official Web site as the materials are developed, published, and submitted to HUD.

A grantee will be deemed by HUD to have received its NSP grant at the time HUD signs its NSP grant agreement (or amendment thereof, in the case of a state that later receives reallocated grant funds).

Grantees are cautioned that, despite the expedited application and plan process, they are still responsible for ensuring that all citizens have equal access to information about the programs. Among other things, this means that each grantee must ensure that program information is available in the appropriate languages for the geographic area served by the jurisdiction. This will be a particular issue for states that make grants covering regular CDBG entitlement areas (or to entitlement grantees). Because regular State CDBG funds are not used in entitlement areas, State CDBG staffs may not be aware of limited English proficient (LEP) speaking populations in those metropolitan jurisdictions.

HUD will review each grantee submission for completeness and consistency with the requirements of this notice and will disapprove incomplete and inconsistent action plan amendments or abbreviated plans. HUD will allow revision and resubmission of a disapproved amendment or abbreviated plan in accordance with 24 CFR 91.500(d) so long as any such resubmission is received by HUD 45 days or less following the date of first disapproval.

In combination, the notice alternative requirements provide the following expedited steps for NSP grants:

- Proposed action plan amendment or abbreviated plan published via the usual methods and on the Internet for no less than 15 calendar days of public comment;
- Final action plan amendment or abbreviated plan posted on the Internet and submitted to HUD by March 1, 2011 (grant application includes Standard Form 424 (SF–424) and certifications);
- HUD expedites review;
- HUD accepts the plan and prepares a cover letter, grant agreement, and grant conditions;
- Grant agreement signed by HUD and immediately transmitted to the grantee;
- Grantee signs and returns the grant agreements;
- HUD establishes the line of credit and the grantee requests and receives DRGR access (if it does not already have access);
- After completing the environmental review(s) pursuant to 24 CFR part 58 and, as applicable, receiving from HUD or the state an approved Request for Release of Funds and certification, the grantee may draw down funds from the line of credit.

In consideration of the shortened comment period, it is essential that grantees ensure that affected parties have sufficient notice of the opportunity to comment. The action plan substantial amendment or abbreviated plan and citizen participation alternative requirement will permit an expedited grant-making process, but one that still provides for public notice, appraisal, examination, and comment on the activities proposed for the use of NSP3 grant funds.

Note: HUD believes an adequate and acceptable substantial amendment or abbreviated plan should be no longer than 25 pages. A plan should provide sufficient detail for citizens and HUD reviewers. Internet address links can be provided to longer elements that may change, such as detailed rehabilitation standards.

Requirement

1. General. Except as described in this notice, statutory and regulatory provisions governing the CDBG program for states and entitlement communities, as applicable, shall apply to the use of these funds. Except as described in this notice, non-entitlement local government grantees receiving a grant directly from HUD shall follow statutory and regulatory provisions governing the CDBG program for entitlement communities.

2. Contents of an NSP Action Plan substantial amendment or abbreviated plan. The elements in the NSP substantial amendment to the Annual Action Plan or an abbreviated plan required for the CDBG program under part 91 are:

a. General information about needs, distribution, use of funds, and definitions:

i. Each grantee must use the HUD Foreclosure Need Web site as linked to from *http://www.hud.gov/nsp* to submit to HUD the locations of its NSP3 areas of greatest need. On this site, HUD provides estimates of foreclosure need and a foreclosure related needs scores at the Census Tract level. The score rank need from 1 to 20, with 20 being census tracts with the HUD-estimated greatest need.

ii. The neighborhood or neighborhoods identified by the NSP3 grantee as being the areas of greatest need must have an individual or average combined index score for the grantee's identified target geography that is not less than the lesser of 17 or the twentieth percentile most needy score in an individual state. For example, if a state's twentieth percentile most needy census tract is 18, the requirement will be a minimum need of 17. If, however, a state's twentieth percentile most needy census tract is 15, the requirement will be a minimum need of 15. HUD will provide the minimum threshold for each state at its Web site *http://www.hud.gov/nsp.* If more than one neighborhood is identified in the Action Plan, HUD will average the neighborhood NSP3 scores, weighting the scores by the estimated number of housing units in each identified neighborhood.

iii. A narrative describing how the distribution and uses of the grantee's NSP funds will meet the requirements of Section 2301(c)(2) of HERA, as amended by the Recovery Act and the Dodd-Frank Act;

iv. For the purposes of the NSP3, the narratives will include:

(A) A definition of "blighted structure" in the context of state or local law;

(B) A definition of "affordable rents;"

(C) A description of how the grantee will ensure continued affordability for NSP-assisted housing; and

(D) A description of housing rehabilitation standards that will apply to NSP-assisted activities.

b. Information by activity describing how the grantee will use the funds, identifying:

i. The eligible use of funds under NSP3;

ii. The eligible CDBG activity or activities;

iii. The areas of greatest need addressed by the activity or activities;

vi. The expected benefit to income-qualified persons or households or areas;

v. Appropriate performance measures for the activity (e.g., units of housing to be acquired, rehabilitated, or demolished for the income levels represented in DRGR, which are currently 50 percent of area median income and below, 51 to 80 percent, and 81 to 120 percent);

vi. Amount of funds budgeted for the activity;

vii. The name and location of the entity that will carry out the activity; and

viii. The expected start and end dates of the activity.

c. A brief description of the general terms under which assistance will be provided, including:

i. Range of interest rates (if any);

ii. Duration or term of assistance;

iii. Tenure of beneficiaries (*e.g.,* renters or homeowners); and

vi. If the activity produces housing, how the design of the activity will ensure continued affordability;

v. How the grantee shall, to the maximum extent feasible, provide for the hiring of employees who reside in the vicinity of NSP3 projects or contract with small businesses that are owned and operated by persons residing in the vicinity of such project, including information on existing local ordinances that address these requirements;

vi. The procedures used to create preferences for the development of affordable rental housing developed with NSP3 funds; and

vii. Whether the funds used for the activity are to count toward the requirement to provide benefit to low-income persons (earning 50 percent or less of area median income).

d. The action plan narrative should specifically address how the grantee's program design will address the local housing market conditions.

e. Information on how to contact grantee program administrators, so that citizens and other interested parties know whom to contact for additional information.

3. Continued affordability. Grantees shall ensure, to the maximum extent practicable and for the longest feasible term, that the sale, rental, or redevelopment of abandoned and foreclosed-upon homes and residential properties under this section remain affordable to individuals or families whose incomes do not exceed 120 percent of area median income or, for units originally assisted with funds under the requirements of section 2301(f)(3)(A)(ii) of HERA, as amended, remain affordable to individuals and families whose incomes do not exceed 50 percent of area median income.

a. In its NSP action plan substantial amendment, a grantee will define "affordable rents" and the continued affordability standards and enforcement mechanisms that it will apply for each (or all) of its NSP activities. HUD will consider any grantee adopting the HOME program standards at 24 CFR 92.252(a), (c), (e), and (f), and 92.254, to be in minimal compliance with this standard and expects any other standards proposed and applied by a grantee to be enforceable and longer in duration. (Note that HERA's continued affordability standard is longer than that required of subrecipients and participating units of general local government under 24 CFR 570.503 and 570.501(b).)

b. The grantee must require each NSP-assisted homebuyer to receive and complete at least 8 hours of homebuyer counseling from a HUD-approved housing counseling agency before obtaining a mortgage loan. If the grantee is unable to meet this requirement for a good cause (*e.g.,* there are no HUD-approved housing counseling agencies within the grantee's jurisdiction, or there are no HUD-approved housing counseling agencies within the grantee's jurisdiction that engage in homebuyer counseling), the grantee may submit a request for an exception to this requirement to the responsible HUD field office, and the HUD field office has the authority to grant an exception for good cause. The grantee must ensure that the homebuyer obtains a mortgage loan from a lender who agrees to comply with the bank regulators' guidance for non-traditional mortgages (*see,* Statement on Subprime Mortgage Lending issued by the Office of the Comptroller of the Currency, Board of Governors of the Federal Reserve System, Federal Deposit Insurance Corporation, Department of the Treasury, and National Credit Union Administration, available at *http://www.fdic.gov/regulations/laws/rules/5000–5160.html*). Grantees must design NSP programs to comply with this requirement and must document compliance in the records, for each homebuyer. Grantees are cautioned against providing or permitting homebuyers to obtain subprime mortgages for whom such mortgages are inappropriate, including homebuyers who qualify for traditional mortgage loans.

4. Citizen participation alternative requirement. HUD is providing an alternative requirement to 42 U.S.C. 5304(a)(2) and (3), to expedite distribution of grant funds and to provide for expedited citizen participation for the NSP substantial amendment. Provisions of 24 CFR 91.105(k), 91.115(i), 570.302 and 570.486, with respect to following the citizen participation plan, are waived to the extent necessary to allow implementation of the requirements below.

a. *Initial Allocation.* To receive its grant allocation, a grantee must submit to HUD for approval an NSP3 application by March 1, 2011. This submission will include a signed SF–424, signed certifications, and a substantial action plan amendment or abbreviated plan meeting the requirements of paragraph b below. (24 CFR 91.505 is waived to the extent necessary to require submission of the substantial amendment to HUD for approval in accordance with this notice.)

Reallocation. To receive an NSP reallocation, a grantee must submit to HUD for approval an NSP application by the deadline indicated in a reallocation announcement. This submission will include a signed standard Federal form SF–424, signed certifications, and a substantial action plan amendment or abbreviated plan meeting the requirements of paragraph B.3.b below. (24 CFR 91.505 is waived to the extent necessary to require submission of the substantial amendment to HUD for approval in accordance with this notice.)

b. Each grantee must prepare and submit its annual Action Plan amendment or abbreviated plan to HUD in accordance with the consolidated plan procedures under the CDBG program as modified by this notice, or HUD will reallocate the funds allocated for that grantee. HUD is providing alternative requirements to 42 U.S.C. 5304(a)(2) and waiving 24 CFR 91.105(c)(2), 91.105(k), 91.115(c)(2), and 91.115(i) to the extent necessary to allow the grantee to provide no fewer than 15 calendar days for citizen comment (rather than 30 days) for its initial NSP submission and any subsequent substantial NSP action plan amendment, and to require that, at the time of submission to HUD, each grantee post its approved action plan amendment and any subsequent NSP amendments on its official Web site along with a summary of citizen comments received within the 15-day comment period. After HUD processes and approves the plan amendment and both HUD and the grantee have signed the grant agreement, HUD will establish the grantee's line of credit in the amount of funds included in the Action Plan amendment, up to the allocation amount.

5. Joint requests. To expedite the use of funds, HUD is providing an alternative requirement to 42 U.S.C. 5304(i) and is waiving 24 CFR 570.308 to the extent necessary to allow for additional joint programs described below.

a. Unit of General Local Government Joint Agreements. Two or more contiguous jurisdictions that are eligible to receive a NSP allocation and are located in the same metropolitan area

may enter into joint agreements. All members to the joint agreement must be eligible to receive NSP1 or NSP3 funds, and one unit of general local government must be designated as the lead entity. The lead entity must execute the NSP grant agreement with HUD. Consistent with 24 CFR 570.308, the lead entity must assume responsibility for administering the NSP grant on behalf of all members, in compliance with applicable program requirements. The lead entity's substantial amendment to the action plan or abbreviated plan will include all participating communities.

b. Joint agreements with a state. Any jurisdiction that is eligible to receive an NSP allocation may enter into a joint agreement with its state. The state shall be the lead entity and must assume responsibility for administering the NSP grant on behalf of the local government, in compliance with applicable program requirements. The substantial amendment to the state's action plan will include any participating unit of general local government.

c. Local jurisdictions receiving reallocation funds may enter into joint agreements in accordance with paragraph B.5.a. or b., regardless of whether the local jurisdiction had a joint agreement for the original NSP allocation.

6. Effect of existing cooperation agreements governing joint programs and urban counties for NSP3 (see NSP1 Notice for parallel language for NSP1 grantees). Any cooperation agreement between a unit of general local government and a county, concerning either a joint program or participation in an urban county under 24 CFR 570.307 or 570.308, and governing CDBG funds appropriated for Federal FY 2010, will be considered to incorporate and apply to NSP3 funding. Any such cooperation agreements will continue to apply to the use of NSP3 funds until the NSP3 funds are expended and the NSP3 grant is closed out. Grantees should note that certain provisions in existing cooperation agreements that govern CDBG funding may be inconsistent with parts of HERA, the Recovery Act, the Dodd-Frank Act or this notice. For instance, set minimum and/or maximum allocation amounts may conflict with priority distributions to areas of greatest need identified in the grantee's action plan substantial amendment. Conforming amendments should be made to existing cooperation agreements, as necessary, to comply with NSP statutory requirements and this notice.

C. Reimbursement for Pre-Award Costs

Background

NSP grantees will need to move forward rapidly to prepare the NSP substantial amendment or abbreviated plan and to undertake other administrative actions, including environmental reviews, as soon as allocations are known. Therefore, HUD is granting permission to states and jurisdictions receiving a direct allocation of NSP funds to incur pre-award costs as if each was a new grantee preparing to receive its first allocation of CDBG funds.

Requirement

HUD is waiving 24 CFR 570.200(h) to the extent necessary to grant permission to jurisdictions receiving a direct NSP allocation under this notice to incur pre-award costs as if each was a new grantee preparing to receive its first allocation of CDBG funds. Similarly, in accordance with OMB Circular A–87, Attachment B, paragraph 31, HUD is allowing states to incur pre-award costs as if each was a new grantee preparing to receive its first allocation of CDBG funds. NSP grantees will be allowed to incur costs necessary to develop the NSP substantial action plan amendment and undertake other administrative actions necessary to receive its first grant, prior to the costs being included in the final plan, provided that the other conditions of 24 CFR 570.200(h) are met. (For units of general local government applying to the state (including entitlements not receiving a direct NSP allocation under this notice), 24 CFR 570.489(b) applies unmodified. Units of general local government receiving direct NSP allocations may incur pre-award costs as would an entitlement community.)

D. Grantee Capacity and Grant Conditions

Background

In the October 6, 2008 Notice, HUD encouraged each local jurisdiction receiving an allocation to carefully consider its administrative capacity to use the funds within the statutory deadline. To support this consideration, HUD will provide each grantee a self-assessment tool that grantees may find useful in better understanding their capacity to undertake and manage NSP activities. This is essentially the same self-assessment tool that is used for NSP Technical Assistance purposes and it will allow HUD to more rapidly identify capacity gaps and technical assistance needs and to provide appropriate technical assistance. Although HUD suggests that every NSP grantee complete and submit the self-assessment with its substantial amendment or abbreviated plan, HUD will require some grantees to complete and submit such a self-assessment as a special condition of receiving funding.

Requirement

For NSP grantees that HUD determines are high risk in accordance with 24 CFR 85.12(a), HUD will apply additional grant conditions in accordance with 24 CFR 85.12(b).

E. Income Eligibility Requirement Changes

Background

The NSP program includes two low- and moderate-income requirements at HERA section 2301(f)(3)(A) that supersede existing CDBG income qualification requirements. Under the heading "Low and Moderate Income Requirement," HERA states that:

> all of the funds appropriated or otherwise made available under this section shall be used with respect to individuals and families whose income does not exceed 120 percent of area median income.

This provision does two main things. First, for the purposes of NSP, it effectively supersedes the overall benefit provisions of the HCD Act and the CDBG regulations, which allow up to 30 percent of a grant to be used for activities that meet a national objective other than low- and moderate-income benefit. Thus, NSP allows the use of *only* the low- and moderate-income benefit national objective. Activities may **not** qualify under NSP using the "prevent or eliminate slums and blight" or "address urgent community development needs" objectives.

Second, this provision also redefines and supersedes the definition of "low- and moderate-income," effectively allowing households whose incomes exceed 80 percent of area median income but do not exceed 120 percent of area median income to qualify as if their incomes did not exceed the published low- and moderate-income levels of the regular CDBG program. To prevent confusion, HUD will refer to this new income group as "middle income," and keep the regular CDBG definitions of "low-income" and "moderate income" in use. Further, HUD will characterize aggregated households whose incomes do not exceed 120 percent of median income as "low-, moderate-, and middle-income households," abbreviated as LMMH. For the purposes of NSP only, an activity may meet the HERA low- and moderate-income national objective if the assisted activity:

• Provides or improves permanent residential structures that will be occupied by a household whose income is at or below 120 percent of area median income (abbreviated as LMMH);

• Serves an area in which at least 51 percent of the residents have incomes at or below 120 percent of area median income (LMMA); or

• Serves a limited clientele whose incomes are at or below 120 percent of area median income (LMMC).

HUD will use the parenthetical terms above to refer to NSP national objectives in program implementation, to avoid confusion with the regular HCD Act definitions.

Land banks are not allowed in the regular CDBG program because of the very high risk that the delay between acquiring property and meeting a national objective can be excessively long, attenuating the intended CDBG program benefits by delaying benefit far beyond the annual or even the 5-year consolidated plan cycles. In the regular CDBG program (and in NSP other than in an eligible land-bank use), a property acquisition activity is dependent on the subsequent re-use of the property meeting a national objective in order to demonstrate program compliance. Given this, the HERA direction that assistance to land banks is an eligible use of NSP funds requires an alternative requirement and policy clarification.

For grantees choosing to assist land banks or demolition of structures with NSP funds, the change to the income qualification level for low-, moderate- and middle-income areas will likely include most of the neighborhoods where property stabilization is required. If an assisted land bank is not merely acquiring properties, but is also working in an area in which other activities are being carried out that are intended to arrest neighborhood decline, such as maintenance, demolition, and facilitating redevelopment of the properties, HUD will, for NSP-assisted activities only, accept that the acquisition and management activities of the land bank may provide sufficient benefit to an area generally (as described in 24 CFR 570.208(a)(1) and 570.483(b)(1)) to meet a national objective (LMMA) prior to final disposition of the banked property. HUD notes that the grantee must determine the actual service area benefiting from a land bank's activities, in accordance with the regulations.

However, HUD does not believe the benefits of just holding property are sufficient to stabilize most neighborhoods or that this is the best use of limited NSP funds absent a re-use plan. Therefore, HUD requires that a land bank may not hold a property for more than 10 years without obligating the property for a specific, eligible redevelopment of that property in accordance with NSP requirements.

Note that if a state provides funds to an entitlement community, the entitlement community must apply the area median income levels applicable to its regular CDBG program geography and not the "balance of state" levels.

Other than the change in the applicable low- and moderate-income qualification level from 80 percent to 120 percent and this notice's change to the calculation at 570.483(b)(3), the area benefit, housing, and limited clientele benefit requirements at 24 CFR 570.208(a) and 570.483(b) remain unchanged, as does the required documentation.

The other NSP low- and moderate-income related provision, as modified by the Dodd-Frank Act, states that:

> "not less than 25 percent of the funds appropriated or otherwise made available under this section shall be used to house individuals or families whose incomes do not exceed 50 percent of area median income."

The Dodd-Frank Act struck language in HERA that specified that funds meeting the 25 percent requirement must be used specifically for the purchase and redevelopment of abandoned and foreclosed homes or residential properties. This means that, as of the effective date of the Dodd-Frank Act, any NSP eligible activity used to house individuals or families at or below 50 percent area medium income may be used to satisfy this requirement (*i.e.,* vacant properties that are not abandoned or foreclosed may be used to meet the requirement as well as eligible commercial properties that are reused to house individuals and families at or below 50% AMI). However, NSP1 and NSP2 funds already obligated or expended prior July 21, 2010, do not retroactively satisfy this requirement.

HUD advises grantees to take note of this threshold as they design NSP activities. This provision does not have a parallel in the regular CDBG program. Grantees must document that an amount equal to at least 25 percent of a grantee's NSP grant (initial allocation plus any program income) has been budgeted in the initial approved action plan substantial amendment or abbreviated plan for activities that will provide housing for income-qualified individuals or families. Prior to and at grant closeout, HUD will review grantees for compliance with this provision by determining whether at least 25 percent of grant funds have been expended for housing for individual households whose incomes do not exceed 50 percent of area median income.

HUD is providing a waiver and alternative requirement to allow grantees to determine low- and moderate income benefit on a unit basis to allow greater support of mixed income housing than the structure basis required by 24 CFR 570.483(b)(3). (Under the cited regulation, the general rule is that at least 51 percent of the residents of an assisted structure must be income eligible.) Under the unit approach, one or more of the units in a structure must house income-eligible families, but the remainder of the units may be market rate, so long as the proportion of assistance provided compared to the overall project budget is no more than the proportion of units that will be occupied by income-eligible households compared to the number of units in the overall project. Under the unit approach, the number of income-eligible units is proportional to the amount of assistance provided. Note that this approach may only be used if the units are generally comparable in size and finishes. Based on HUD experience, this approach is generally more compatible with large-scale development of mixed-income housing than the structure approach under which a dollar of CDBG assistance to a structure means that 51 percent of the units must meet income requirements.

For the purposes of NSP, adopting the unit basis continues to benefit individuals and families whose income does not exceed 120 percent of area median income by limiting the proportion of the funding to the proportion of units that are being assisted with NSP funds. This approach also helps to avoid displacing existing over-income tenants in a building being treated with NSP. Finally, it promotes the type of mixed-income developments that experience shows to be more successful both economically and socially. Therefore, the waiver and alternative requirements allow the grantee a choice. The grantee may measure benefit within a housing development project (1) according to the existing CDBG requirements, (2) according to the HOME program requirements at 24 CFR 92.205(d) or (3) according to the modified CDBG alternative requirements specified in this notice, which extend the CDBG exception noted above. The grantee must select and use just one method for each project.

Requirements

1. Overall benefit supersession and alternative requirement. The requirements at 42 U.S.C. 5301(c), 42 U.S.C. 5304(b)(3)(A), 24 CFR 570.484 (for states), and 24 CFR 570.200(a)(3) that 70 percent of funds are for activities that benefit low- and moderate-income persons are superseded and replaced by section 2301(f)(3)(A) of HERA. One hundred percent of NSP funds must be used to benefit individuals and households whose income does not exceed 120 percent of area median income. NSP shall refer to such households as "low-, moderate-, and middle-income."

2. National objectives supersession and alternative requirements. The requirements at 42 U.S.C 5301(c) are superseded and 24 CFR 570.208(a) and 570.483 are waived to the extent necessary to allow the following alternative requirements:

a. for purposes of NSP only, the term "low- and moderate-income person" as it appears throughout the CDBG regulations at 24 CFR part 570 shall be defined as a member of a low-, moderate-, and middle-income household, and the term "low- and moderate-income household" as it appears throughout the CDBG regulations shall be defined as a household having an income equal to or less than 120 percent of area median income, measured as 2.4 times the current Section 8 income limit for households below 50 percent of median income, adjusted for family size. A state choosing to carry out an activity directly must apply the requirements of 24 CFR 570.208(a) to determine whether the activity has met the low-, moderate-, and middle-income (LMMI) national objective and must maintain the documentation required at 24 CFR 570.506 to demonstrate compliance to HUD.

b. The national objectives related to prevention and elimination of slums and blight and addressing urgent community development needs (24 CFR 570.208(b) and (c) and 570.483(c) and (d)) are not applicable to NSP-assisted activities.

c. Each grantee whose plan includes assisting rental housing shall develop and make public its definition of affordable rents for NSP-assisted rental projects.

d. An NSP-assisted property may not be held in a land bank for more than 10 years without obligating the property for a specific, eligible redevelopment of that property in accordance with NSP requirements.

e. Not less than 25 percent of any NSP grant shall be used to house individuals or families whose incomes do not exceed 50 percent of area median income.

f. HUD will consider assistance for a multi-unit housing project involving new construction, acquisition, reconstruction, or rehabilitation to benefit LMMI households in the following circumstances:

(i)(A) The NSP assistance defrays the development costs of a housing project providing eligible permanent residential units that, upon completion, will be occupied by income-qualified households; and

(B) if the project is rental, the units occupied by income-qualified households will be leased at affordable rents. The grantee or unit of general local government shall adopt and make public its standards for determining "affordable rents" for this purpose; and

(C) The proportion of the total cost of developing the project to be borne by NSP assistance is no greater than the proportion of units in the project that will be occupied by income-qualified households; or

(ii) When NSP assistance defray the development costs of eligible permanent residential units, such assistance shall be considered to benefit LMMI persons if the grantee follows the provisions of 24 CFR 92.205(d); or

(iii) The requirements of 24 CFR 570.208(a)(3) or 570.483(b)(3) are met, as applicable.

(iv) The grantee must select and use just one method for each project.

(v) The term "project" will be defined as in the HOME Program at 24 CFR 92.2.

(vi) If the grantee applies option (i) or (ii) above to a housing project, 24 CFR 570.208(a)(3) or 570.483(b)(3), as applicable, is waived for that project.

F. State Distribution to Entitlement Communities and Indian Tribes

Background

This notice includes an alternative requirement to the HCD Act and a regulatory waiver allowing distribution of funds by a state to CDBG regular entitlement communities and Tribes. This is consistent with the provision of HERA that specifically sets distribution priorities for areas with the greatest need, including "metropolitan areas, metropolitan cities, urban areas, rural areas, low- and moderate-income areas * * *." Therefore, states receiving allocations under this notice may distribute funds to or within any jurisdiction within the state that is among those with the greatest need, even if the jurisdiction is among those receiving a direct formula allocation of funds from HUD under the regular CDBG program or this notice.

Requirement

Alternative requirement for distribution to CDBG metropolitan cities, urban counties, and Tribes. In accordance with the direction of HERA that grantees distribute funds to the areas of greatest need, HUD is providing an alternative requirement to 42 U.S.C. 5302(a)(7) (definition of "nonentitlement area") and waiving provisions of 24 CFR part 570, including 24 CFR 570.480(a), that would prohibit states electing to receive CDBG funds from distributing such funds to units of general local government in entitlement communities or to Tribes. The appropriations law supersedes the statutory distribution prohibition at 42 U.S.C. 5306(d)(1) and (2)(A). Alternatively, the state is required to distribute funds without regard to a local government status under any other CDBG program and must use funds in entitlement jurisdictions if they are identified as areas of greatest need, regardless of whether the entitlement receives its own NSP allocation.

G. State's Direct Action

Background

In the State CDBG Program, states receiving CDBG funds may not directly use the funds for activities, but must distribute them to units of general local government, which then use the funds for program activities. HUD also notes the language of HERA section 2301(c) that says, in part, that:

> "Any State * * * that receives amounts pursuant to this section shall * * * use such amounts to purchase and redevelop * * *."

This clearly speaks to the states using funds directly for projects and supersedes the HCD Act direction for states to only *distribute* funds to nonentitlement areas. Direct use of funds by a state may also result in more expeditious use of NSP funds. Therefore, a state receiving NSP funds may carry out NSP activities directly for some or all of its assisted grant activities, just as CDBG entitlement communities do under 24 CFR 570.200(f), including, but not limited to, carrying out activities using its own employees, procuring contractors, private developers, and providing loans and grants through nonprofit subrecipients (including local governments and other public nonprofits such as regional or local planning or development authorities and public housing authorities).

For those activities a state chooses to carry out directly, HUD strongly advises the state to adopt the recordkeeping required for an entitlement community at 24 CFR 570.506 and the subrecipient agreement provisions at 24 CFR 570.503. Also, in such cases, as an alternative requirement to 42 U.S.C. 5304(i), the state may retain and re-use program income as if it were an entitlement community.

HUD is granting regulatory waivers of State CDBG regulations to conform the applicable management, real property change of use, and recordkeeping rules when a state chooses to carry out activities as if it were an entitlement community.

Requirements

1. Responsibility for state review and handling of noncompliance. This change conforms NSP requirements with the waiver allowing the state to carry out activities directly. 24 CFR 570.492 is waived and the following alternative requirement applies: The state shall make reviews and audits, including on-site reviews of any subrecipients, designated public agencies, and units of general local government as may be necessary or appropriate to meet the requirements of 42 U.S.C. 5304(e)(2), as amended, as modified by this notice. In the case of noncompliance with these requirements, the state shall take such actions as may be appropriate to prevent a continuance of the deficiency, mitigate any adverse effects or consequences, and prevent a recurrence. The state shall establish remedies for noncompliance by any designated public agencies or units of general local governments and for its subrecipients.

2. Change of use of real property for state grantees acting directly. This waiver conforms the change of use of real property rule to the waiver allowing a state to carry out activities directly. For purposes of this program, in 24 CFR 570.489(j), (j)(1), and the last sentence of (j)(2), "unit of general local government" shall be read as "unit of general local government or state."

3. Recordkeeping for a state grantee acting directly. Recognizing that the state may carry out activities directly, 24 CFR 570.490(b) is waived in such a case and the following alternative provision shall apply:

State Records. The state shall establish and maintain such records as may be necessary to facilitate review and audit by HUD of the state's administration of NSP funds under 24 CFR 570.493. Consistent with applicable statutes, regulations, waivers and alternative requirements, and other Federal requirements, the content of records maintained by the state shall be sufficient to: (1) Enable HUD to make the applicable determinations described at 24 CFR 570.493; (2) make compliance determinations for activities carried out directly by the state; and (3) show how activities funded are consistent with the descriptions of activities proposed for funding in the action plan. For fair housing and equal opportunity purposes, and as applicable, such records shall include data on the racial, ethnic, and gender characteristics of persons who are applicants for, participants in, or beneficiaries of the program.

4. State compliance with certifications for state grantees acting directly. This is a conforming change related to the waiver to allow a state to act directly. Because a state grantee under this appropriation may carry out activities directly, HUD is applying the regulations at 24 CFR 570.480(c) with respect to the basis for HUD determining whether the state has failed to carry out its certifications, so that such basis shall be that the state has failed to carry out its certifications in compliance with applicable program requirements.

5. Clarifying note on the process for environmental release of funds when a state carries out activities directly. Usually, a state distributes CDBG funds to units of local government and takes on HUD's role in receiving environmental certifications from the grantees and approving releases of funds. For NSP, HUD allows a state grantee to also carry out activities directly instead of distributing them to other governments. According to the environmental regulations at 24 CFR 58.4, when a state carries out activities directly, the state must submit the certification and request for release of funds to HUD for approval.

H. Eligibility and Allowable Costs

Background

Most of the activities eligible under NSP are correlated with CDBG-eligible activities under 42 U.S.C. 5305(a). This correlation reduces implementation risks, because it ensures that the NSP grants are administered largely in accordance with long-established CDBG rules and controls. The table in the requirements paragraph below shows the eligible uses under NSP and the eligible activities from the regulations for the regular CDBG entitlement program that HUD has determined best correspond to those uses. If a grantee creates a program design that includes a CDBG-eligible activity that is not shown in the table to support an NSP-eligible use, the Department is providing an alternative requirement to 42 U.S.C. 5305(a) that HUD may allow a grantee an additional eligible-activity category if HUD finds the activity to be in compliance with NSP statutory requirements. As under the regular CDBG program, grantees may fund costs, such as reasonable developer's fees, related to NSP-assisted housing rehabilitation or construction activities. Only NSP1 funds may be used to redevelop acquired property for nonresidential uses, such as public parks, commercial uses, or mixed residential and commercial uses. Redevelopment activities using NSP2 and NSP3 funds must be for housing.

The annual entitlement CDBG program allows up to 20 percent of any grant amount plus program income may be used for general administration and planning costs. The State CDBG Program is also subject to the 20 percent limitation, but within that cap up to 3 percent may be used by the state for state administrative costs and technical assistance to potential local government program grantees, with the remainder available to be granted to local government grantees for their administrative costs. Because some of the costs usually allocated under these caps are not applicable to NSP grants (for example, the costs of completing the entire consolidated plan process), these amounts seem excessive to HUD in the context of the NSP program. On the other hand, HUD wants to encourage and support expeditious, appropriate, and compliant use of grant funds, and to prevent fraud, waste, and abuse of funds. Therefore, HUD is providing an alternative requirement that an amount of up to 10 percent of an NSP grant provided to a jurisdiction and of up to 10 percent of program income earned may be used for general administration and planning activities as those are defined at 24 CFR 570.205 and 206. For all grantees, including states, the 10 percent limitation applies to the grant as a whole.

The regulatory and statutory requirements for state match for program administration at 24 CFR 570.489(a)(i) are superseded by the statutory direction at section 2301(e)(2) of HERA that no matching funds shall be required for a state or unit of general local government to receive a grant.

Requirements

1. Use of grant funds must constitute an eligible use under HERA.

2. In addition to being an eligible NSP use of funds, each activity funded under NSP must also be CDBG-eligible under

42 U.S.C. 5305(a) and meet a CDBG national objective.

3.a. Certain CDBG-eligible activities correlate to specific NSP-eligible uses and vice versa. 42 U.S.C. 5305(a) and 24 CFR 570.201–207 and 570.482(a) through (d) are superseded to the extent necessary to allow the eligible uses described under section 2301(c)(4) of HERA in accordance with this paragraph (including the table and subparagraphs below) or with permission granted, in writing, by HUD upon a written request by the grantee that demonstrates that the proposed activity constitutes an eligible use under NSP. All NSP grantees, including states, will use the NSP categories and CDBG entitlement regulations listed below.

NSP-eligible uses	Correlated eligible activities from the CDBG entitlement regulations
(A) Establish financing mechanisms for purchase and redevelopment of *foreclosed upon homes and residential properties,* including such mechanisms as soft-seconds, loan loss reserves, and shared-equity loans for low- and moderate-income homebuyers.	• As part of an activity delivery cost for an eligible activity as defined in 24 CFR 570.206. • Also, the eligible activities listed below to the extent financing mechanisms are used to carry them out.
(B) Purchase and rehabilitate *homes and residential properties that have been abandoned or foreclosed upon,* in order to sell, rent, or redevelop such homes and properties.	• 24 CFR 570.201(a) Acquisition (b) Disposition, (i) Relocation , and (n) Direct homeownership assistance (as modified below); • 24 CFR 570.202 eligible rehabilitation and preservation activities for homes and other residential properties. • HUD notes that any of the activities listed above may include required homebuyer counseling as an activity delivery cost.
(C) Establish and operate land banks for *homes and residential properties that have been foreclosed upon*.	• 24 CFR 570.201(a) Acquisition and (b) Disposition. • HUD notes that any of the activities listed above may include required homebuyer counseling as an activity delivery cost.
(D) Demolish *blighted structures*	• 24 CFR 570.201(d) Clearance for blighted structures only.
(E) Redevelop *demolished or vacant properties* as housing.*	• 24 CFR 570.201(a) Acquisition, (b) Disposition, (c) Public facilities and improvements, (e) Public services for housing counseling, but only to the extent that counseling beneficiaries are limited to prospective purchasers or tenants of the redeveloped properties, (i) Relocation, and (n) Direct homeownership assistance (as modified below). • 24 CFR 570.202 Eligible rehabilitation and preservation activities for demolished or vacant properties. • 24 CFR 570.204 Community based development organizations. • HUD notes that any of the activities listed above may include required homebuyer counseling as an activity delivery cost.

* NSP1 funds used under eligible use (E) may be used for nonresidential purposes, while NSP2 and NSP3 funds must be used for housing.

b. HUD will not consider requests to allow foreclosure prevention activities, or to allow demolition of structures that are not blighted. Neither will it allow purchase of residential properties and homes that have not been abandoned or foreclosed upon, except under paragraph (E) of the eligible use chart above. HUD does not have the authority to permit uses or activities not authorized by HERA.

c. New construction of housing is eligible as part the redevelopment of demolished or vacant properties as provided in paragraph (E) of the eligible use chart above.

d. 24 CFR 570.201(n) is waived and an alternative requirement provided for 42 U.S.C. 5305(a) to the extent necessary to allow provision of NSP-assisted homeownership assistance to persons whose income does not exceed 120 percent of median income.

e. No NSP2 or NSP3 funds may be used to demolish any public housing (as defined by Section 3 of the U.S. Housing Act of 1937 (42 U.S.C. 1437a)).

f. For NSP2 and NSP3, a grantee may not use more than 10 percent of its grant for demolition activities under HERA sections 2301(c)(4)(C) and (D), unless the Secretary determines that such use represents an appropriate response to local market conditions. NSP2 and NSP3 grantees seeking to use more than 10 percent of their grant amounts on demolition activities must request a waiver from HUD.

4. Alternative requirement for the limitation on planning and administrative costs. 24 CFR 570.200(g) and 570.489(a)(3) are waived to the extent necessary to allow each grantee under this notice to expend no more than 10 percent of its grant amount, plus 10 percent of the amount of program income received by the grantee, for activities eligible under 24 CFR 570.205 or 206. The requirements at 24 CFR 570.489 are waived to the extent that they require a state match for general administrative costs. (States may use NSP funds under this 10 percent limitation to provide technical assistance to local governments and nonprofit program participants.)

I. Rehabilitation Standards

Background

HERA provides that any NSP-assisted rehabilitation of a foreclosed-upon home or residential property shall be to the extent necessary to comply with applicable laws, codes, and other requirements relating to housing safety, quality, and habitability, in order to sell, rent, or redevelop such homes and properties. HUD is also imposing this requirement for NSP3-assisted new construction. This imposes a requirement that does not exist in the CDBG program. This means that each grantee must describe or reference in its NSP action plan amendment what rehabilitation standards it will apply for NSP-assisted rehabilitation. As a reminder, grantees are subject to Section 504 of the Rehabilitation Act of 1973 and the Fair Housing Act, including their respective provisions related to physical accessibility standards for persons with disabilities. *See* 24 CFR part 8; 24 CFR 100.205. *See* also 24 CFR 570.487 and 24 CFR 570.602. HUD will monitor to ensure the standards are implemented.

HERA defines rehabilitation to include improvements to increase the energy efficiency or conservation of such homes and properties or to provide a renewable energy source or sources for such homes and properties. Such improvements are also eligible under the regular CDBG program. HUD strongly encourages grantees to use NSP funds not only to stabilize neighborhoods in the short-term, but to strategically incorporate modern, green

building and energy-efficiency improvements in all NSP activities to provide for long-term affordability and increased sustainability and attractiveness of housing and neighborhoods. At minimum, NSP3 grantees must have the rehabilitation standards required below. See Appendix C for examples of green and energy-efficiency actions. Additional resources related to sustainable and energy-efficient construction are available on the NSP Resource Exchange Web site (*http://www.hud.gov/nspta*).

Requirement. For NSP3, HUD is requiring that all gut rehabilitation (*i.e.,* general replacement of the interior of a building that may or may not include changes to structural elements such as flooring systems, columns or load bearing interior or exterior walls) or new construction of residential buildings up to three stories must be designed to meet the standard for Energy Star Qualified New Homes. All gut rehabilitation or new construction of mid -or high-rise multifamily housing must be designed to meet American Society of Heating, Refrigerating, and Air-Conditioning Engineers (ASHRAE) Standard 90.1–2004, Appendix G plus 20 percent (which is the Energy Star standard for multifamily buildings piloted by the Environmental Protection Agency and the Department of Energy). Other rehabilitation must meet these standards to the extent applicable to the rehabilitation work undertaken, *e.g.,* replace older obsolete products and appliances (such as windows, doors, lighting, hot water heaters, furnaces, boilers, air conditioning units, refrigerators, clothes washers and dishwashers) with Energy Star-labeled products. Water efficient toilets, showers, and faucets, such as those with the WaterSense label, must be installed. Where relevant, the housing should be improved to mitigate the impact of disasters (*e.g.,* earthquake, hurricane, flooding, fires).

J. Sale of Homes

Background

Section 2301(d)(3) of HERA directs that, if an abandoned or foreclosed-upon home or residential property is purchased, redeveloped, or otherwise sold to an individual as a primary residence, then such sale shall be in an amount equal to or less than the cost to acquire and redevelop or rehabilitate such home or property up to a decent, safe, and habitable condition. (Sales and closing costs are eligible NSP redevelopment or rehabilitation costs). Note that the maximum sales price for a property is determined by aggregating all costs of acquisition, rehabilitation, and redevelopment (including related activity delivery costs, which generally may include, among other items, costs related to the sale of the property).

Requirements

1. In its records, each grantee must maintain sufficient documentation about the purchase and sale amounts of each property and the sources and uses of funds for each activity so that HUD can determine whether the grantee is in compliance with this requirement. A grantee will be expected to provide this documentation individually for each activity.

2. In determining the sales price limitation, HUD will not consider the costs of boarding up, lawn mowing, simply maintaining the property in a static condition, or, in the absence of NSP-assisted rehabilitation or redevelopment of the property, the costs of completing a sales transaction or other disposition to be redevelopment or rehabilitation costs. These costs may not be included by the grantee in the determination of the sales price for an NSP-assisted property.

3. For reporting purposes only, for a housing program involving multiple single-family structures under the management of a single entity, HUD will permit reporting the aggregation of activity delivery costs across the total portfolio of projects until completion of the program or closeout of the grant with HUD, whichever comes earlier.

K. Acquisition and Relocation

Background

Acquisition of Foreclosed-Upon Properties. HUD notes that section 2301(d)(1) of HERA conflicts with section 301(3) of the URA (42 U.S.C. 4651) and related regulatory requirements at 49 CFR 24.102(d). As discussed further, section 2301(d)(1) of HERA requires that any acquisition of a foreclosed-upon home or residential property under NSP be at a discount from the current market-appraised value of the home or property and that such discount shall ensure that purchasers are paying below-market value for the home or property. Section 301(3) of the URA, as implemented at 49 CFR 24.102(d), provides that an offer of just compensation shall not be less than the agency's approved appraisal of the fair market value of such property. These URA acquisition policies apply to any acquisition of real property for a federally funded project, except for acquisitions described in 49 CFR 24.101(b)(1) through (5) (commonly referred to as "voluntary acquisitions"). As the more recent and specific statutory provision, section 2301(d)(1) of HERA prevails over section 301 of the URA for purposes of NSP-assisted acquisitions of foreclosed-upon homes or residential properties.

NSP Appraisal Requirements. Section 2301(d)(1) of HERA requires an appraisal for purposes of determining the statutory purchase discount. This appraisal requirement applies to any NSP-assisted acquisition of a foreclosed-upon home or residential property (including voluntary acquisitions). As noted above, section 301 of the URA does not apply to voluntary acquisitions. While the URA and its regulations do not require appraisals for such acquisitions, the URA acquisition policies do not prohibit acquiring agencies from obtaining appraisals. Appendix A, 49 CFR 24.101(b)(1)(iv) and (2)(ii), acknowledges that acquiring agencies may still obtain an appraisal to support their determination of fair market value.

One-for-One Replacement. HUD is providing an alternative requirement to the one-for-one replacement requirements set forth in 42 U.S.C. 5304(d)(2), as implemented at 24 CFR 42.375. The Department anticipates a large number of requests from grantees for whom the requirements will be onerous given the pressing rush to implement NSP, and several of the major housing markets affected by the foreclosure crisis have a surplus of abandoned and foreclosed-upon residential properties. The additional workload of reviewing requests under 42 U.S.C. 5304(d)(3) and 24 CFR 42.375(d) could cause a substantial backlog at HUD and delay NSP program operations. Therefore, the alternative requirement is that an NSP grantee is not required to meet the requirements of 42 U.S.C. 5304(d), as implemented at 24 CFR 42.375, to provide one-for-one replacement of low- and moderate-income dwelling units demolished or converted in connection with activities assisted with NSP funds. Alternatively, each grantee must submit the information described below relating to its demolition and conversion activities in its action plan substantial amendment or abbreviated plan. The grantee will report to HUD and citizens (via prominent posting of the DRGR reports on the grantee's official Internet site) on progress related to these measures until the closeout of its grant with HUD. HUD reminds grantees to be aware of the requirement to have and follow a residential antidisplacement and relocation plan for the CDBG and HOME programs. This requirement is not waived for those programs and

continues to apply to activities assisted with regular CDBG and HOME funds.

Relocation Assistance. HUD is not waiving or specifying alternative requirements to the URA's relocation provisions. Those requirements that do not conflict with HERA continue to apply. HUD is *not* specifying alternative requirements to the relocation assistance provisions at 42 U.S.C. 5304(d). Guidance on meeting these requirements is available on the HUD Web site and through local HUD field offices. HUD urges grantees to consider URA requirements in designing their programs and to remember that there are URA obligations related to voluntary and involuntary property acquisition activities, even for vacant and abandoned property.

Tenant Protections. The Recovery Act included tenant protections applicable to NSP grants. First, the Recovery Act included a provision applicable to any foreclosed upon dwelling or residential real property that was acquired by the initial successor in interest pursuant to the foreclosure after February 17, 2009 and was occupied by a *bona fide* tenant at the time of foreclosure. The use of NSP funds for acquisition of such property is subject to a determination by the grantee that the initial successor in interest complied with these requirements. Second, NSP grantees may not refuse to lease a dwelling unit in housing with such loan or grant to a participant under section 8 of the United States Housing Act of 1937 (42 U.S.C 1437f) because of the status of the prospective tenant as such a participant.

Requirements

One for One Replacement Requirements.

1. The one-for-one replacement requirements at 24 CFR 570.488, 570.606(c), and 42.375 are waived for low- and moderate-income dwelling units demolished or converted in connection with an activity assisted with NSP funds. As an alternative requirement to 42 U.S.C. 5304(d)(2)(A)(i) and (ii), each grantee planning to demolish or convert any low- and moderate-income dwelling units as a result of NSP-assisted activities must identify all of the following information in its NSP substantial amendment or abbreviated plan:

(a) The number of low- and moderate-income dwelling units reasonably expected to be demolished or converted as a direct result of NSP-assisted activities;

(b) The number of NSP affordable housing units (made available to low-, moderate-, and middle-income households) reasonably expected to be produced, by activity and income level as provided for in DRGR, by each NSP activity providing such housing (including a proposed time schedule for commencement and completion); and

(c) The number of dwelling units reasonably expected to be made available for households whose income does not exceed 50 percent of area median income.

The grantee must also report on actual performance for demolitions and production, as required elsewhere in this notice.

Tenant Protections.

2. The following requirements apply to any foreclosed upon dwelling or residential real property that was acquired by the initial successor in interest pursuant to the foreclosure after February 17, 2009 and was occupied by a *bona fide* tenant at the time of foreclosure. The use of NSP funds for acquisition of such property is subject to a determination by the grantee that the initial successor in interest complied with these requirements.

a. The initial successor in interest in a foreclosed upon dwelling or residential real property shall provide a notice to vacate to any *bona fide* tenant at least 90 days before the effective date of such notice. The initial successor in interest shall assume such interest subject to the rights of any *bona fide* tenant, as of the date of such notice of foreclosure: (i) Under any *bona fide* lease entered into before the date of notice of foreclosure to occupy the premises until the end of the remaining term of the lease, except that a successor in interest may terminate a lease effective on the date of sale of the unit to a purchaser who will occupy the unit as a primary residence, subject to the receipt by the tenant of the 90-day notice under this paragraph; or (ii) without a lease or with a lease terminable at will under State law, subject to the receipt by the tenant of the 90-day notice under this paragraph, except that nothing in this section shall affect the requirements for termination of any Federal- or State-subsidized tenancy or of any State or local law that provides longer time periods or other additional protections for tenants.

b.i. In the case of any qualified foreclosed housing in which a recipient of assistance under section 8 of the United States Housing Act of 1937 (42 U.S.C 1437f) (the "Section 8 Program") resides at the time of foreclosure, the initial successor in interest shall be subject to the lease and to the housing assistance payments contract for the occupied unit.

ii. Vacating the property prior to sale shall not constitute good cause for termination of the tenancy unless the property is unmarketable while occupied or unless the owner or subsequent purchaser desires the unit for personal or family use.

iii. If a public housing agency is unable to make payments under the contract to the immediate successor in interest after foreclosure, due to (A) an action or inaction by the successor in interest, including the rejection of payments or the failure of the successor to maintain the unit in compliance with the Section 8 Program or (B) an inability to identify the successor, the agency may use funds that would have been used to pay the rental amount on behalf of the family—(1) to pay for utilities that are the responsibility of the owner under the lease or applicable law, after taking reasonable steps to notify the owner that it intends to make payments to a utility provider in lieu of payments to the owner, except prior notification shall not be required in any case in which the unit will be or has been rendered uninhabitable due to the termination or threat of termination of service, in which case the public housing agency shall notify the owner within a reasonable time after making such payment; or (2) for the family's reasonable moving costs, including security deposit costs.

c. For purposes of this section, a lease or tenancy shall be considered *bona fide* only if: (i) the mortgagor under the contract is not the tenant; (ii) the lease or tenancy was the result of an arm's length transaction; and (iii) the lease or tenancy requires the receipt of rent that is not substantially less than fair market rent for the property. See Section II.A for the definition of date of notice of foreclosure.

d. The grantee shall maintain documentation of its efforts to ensure that the initial successor in interest in a foreclosed upon dwelling or residential real property has complied with the requirements under section K.2.a. and K.2.b. If the grantee determines that the initial successor in interest in such property failed to comply with such requirements, it may not use NSP funds to finance the acquisition of such property unless it assumes the obligations of the initial successor in interest specified in section K.2.a. and K.2.b.

e. Grantees must provide the relocation assistance required pursuant to 24 CFR 570.606 to tenants displaced as a result of an NSP-assisted activity and maintain records in sufficient detail to demonstrate compliance with the provisions of that section. For purposes

of clarification, grantees need to be aware that the NSP tenant protection requirements under the Recovery Act are separate and apart from the obligations imposed on grantees by the URA. The URA applies to any person displaced as a direct result of acquisition, rehabilitation, and/or demolition of real property for a federally-assisted project. Eligibility determinations under the URA and the required notices and relocation assistance requirements are separate and distinct from the NSP tenant protections in the Recovery Act. Grantees cannot assume that a person entitled to the NSP tenant protections under the Recovery Act is also eligible for assistance under the URA (or vice versa). Any tenant lawfully occupying the property evicted by the owner/mortgagor in order to facilitate an acquisition under the NSP program (including short sales) is most likely eligible for URA relocation assistance and payments as a displaced person.

3. The grantee of any grant or loan made from NSP funds may not refuse to lease a dwelling unit in housing with such loan or grant to a participant under the Section 8 Program because of the status of the prospective tenant as such a participant.

4. This section shall not preempt any Federal, State or local law that provides more protections for tenants.

L. Note on Eminent Domain

Although section 2303 of HERA appears to allow some use of eminent domain for public purposes, HUD cautions grantees that HERA section 2301(d)(1) may effectively ensure that all NSP-assisted property acquisitions must be voluntary acquisitions as the term is defined by the URA and its implementing regulations. Section 2301(d)(1) of HERA directs that any purchase of a foreclosed-upon home or residential property under NSP be at a discount from the current market appraised value of the home or residential property and that such discount shall ensure that purchasers are paying below-market value for the home or property. However, the Fifth Amendment to the U.S. Constitution provides that private property shall not be taken for public use without just compensation. The Supreme Court has ruled that a jurisdiction must pay fair market value for the purchase of property through eminent domain. A grantee contemplating using NSP funds to assist an acquisition involving an eminent domain action is advised to consult appropriate legal counsel before taking action.

M. Timeliness of Use and Expenditure of NSP Funds

Background

One of the most critical NSP1 provisions is the HERA requirement at section 2301(c)(1) that any grantee receiving a grant:

> "* * * shall, not later than 18 months after the receipt of such amounts, use such amounts to purchase and redevelop abandoned and foreclosed homes and residential properties."

HUD has defined the term "use" in this notice to include obligation of funds.

A further complication is that HERA clearly expects grantees to earn program income under this grant program. As provided under 24 CFR 85.21, entitlements grantees and subrecipients shall disburse program income before requesting additional cash withdrawals from the U.S. Treasury. States are governed similarly by 24 CFR 570.489(e)(3) and 31 CFR part 205. This requirement is reflected in the regulations governing use of program income by states and units of general local government under the CDBG program. This means that a grantee that successfully and quickly deploys its program and generates program income may obligate, draw down, and expend an amount equal to its NSP1 allocation amount, and still have funds remaining in its line of credit, possibly subject to recapture at the 18-month deadline.

On consideration, the Department chose to implement the NSP1 use test based on whether the state or unit of general local government has expended or obligated the NSP1 grant funds and program income in an aggregate amount at least equal to the NSP1 allocation. HUD also imposed a deadline for expending NSP1 grant funds because the intent of these grants clearly is to quickly address an emergency situation in areas of the greatest need.

NSP2 and NSP3 grants follow the statutory expenditure deadlines described under the Recovery Act, which provides that grantees:

> "shall expend at least 50 percent of allocated funds within 2 years of the date funds become available to the [recipient] for obligation, and 100 percent of such funds within 3 years of such date."

NSP2 and NSP3 expenditure timelines are tighter than under NSP1. In the NSP2 NOFA, HUD required NSP2 grantees to expend their entire grant, including program income, within the statutory timeframes. Upon reflection, HUD has determined that the better interpretation would be similar to the NSP1 requirement that requires the expenditure of grant funds and program income in an aggregate amount at least equal to the NSP2 or NSP3 allocation. HUD is therefore including a revision to the NSP2 NOFA program requirements in this Notice. If any NSP grantee fails to meet the requirement to expend an amount equal to its grant within the relevant timelines, HUD, on the first business day after that deadline, will notify the grantee and restrict the amount of unused funds in the grantee's line of credit. HUD will allow the grantee 30 days to submit information to HUD regarding any additional expenditure of funds not already recorded in DRGR. Then HUD may proceed to recapture the unused funds or provide for other corrective action(s) or sanction.

Requirements

1. Timely use of NSP1 funds. At the end of the statutory 18-month use period, which begins when the NSP grantee receives its funds from HUD, the state or unit of general local government NSP grantee's accounting records and DRGR information must reflect outlays (expenditures) and unliquidated obligations for approved activities that, in the aggregate, are at least equal to the NSP allocation. (The DRGR system collects information on expenditures and obligations.) Grantees receiving a reallocation of NSP1 funds must also comply with the 18-month use requirement.

2. Timely expenditure of NSP1 funds. The timely distribution or expenditure requirements of sections 24 CFR 570.494 and 570.902 are waived to the extent necessary to allow the following alternative requirement: All NSP1 grantees must expend on eligible NSP activities an amount equal to or greater than the initial allocation of NSP1 funds within 4 years of receipt of those funds or HUD will recapture and reallocate the amount of funds not expended.

3. Timely expenditure of NSP2 and NSP3 funds. The timely distribution or expenditure requirements of sections 24 CFR 570.494 and 570.902 are waived to the extent necessary to allow the following alternative requirement: NSP2 and NSP3 grantees must expend on eligible NSP activities an amount equal to or greater than the 50 percent of the initial allocation of NSP funds within 2 years of receipt of those funds and 100 percent of the initial allocation of NSP funds within 3 years of receipt of those funds or HUD will recapture and reallocate the amount of funds not expended or provide for other corrective action(s) or sanction. A grantee will be deemed by HUD to have received its

NSP grant at the time HUD signs its NSP grant agreement.

N. Alternative Requirement for Program Income (Revenue) Generated By Activities Assisted With Grant Funds

Requirement

1. Revenue *(i.e.,* gross income) received by a state, unit of general local government, or subrecipient (as defined at 24 CFR 570.500(c)) that is directly generated from the use of CDBG funds (which term includes NSP grant funds) constitutes CDBG program income. To ensure consistency of treatment of such program income, the definition of program income at 24 CFR 570.500(a) shall be applied to amounts received by states, units of general local government, and subrecipients.

2. Cash management. Substantially all program income must be disbursed for eligible NSP activities before additional cash withdrawals are made from the U.S. Treasury.

3. Agreements with subrecipients. States and units of general local government must incorporate in subrecipient agreements such provisions as are necessary to ensure compliance with the requirements of this section.

O. Reporting

Background

HUD is requiring regular reporting on each NSP grant in the DRGR system to ensure the Department has sufficient management information to follow-up promptly if a grantee lags in implementation and risks recapture of its grant funds. For NSP, HUD is waiving the annual reporting requirements of the consolidated plan to allow HUD to collect more regular information on various aspects of the uses of funds and of the activities funded with these grants. HUD will use the reports to exercise oversight for compliance with the requirements of this notice and for prevention of fraud, waste, and abuse of funds.

The regular CDBG performance measurement requirements will not apply to the NSP funds. HUD has configured DRGR performance measures to fit the NSP activities and will provide additional guidance on NSP performance measures.

To collect these data elements and to meet its reporting requirements, HUD is requiring each grantee to report on its NSP funds to HUD using the online DRGR system, which uses a streamlined, Internet-based format. HUD will use grantee reports to monitor for anomalies or performance problems that suggest fraud, waste, and abuse of funds; to reconcile budgets, obligations, fund draws, and expenditures; to calculate applicable administrative and public service limitations and the overall percent of benefit to LMMI persons; and as a basis for risk analysis in determining a monitoring plan.

The grantee must post the NSP report on a Web site for its citizens when it submits the report to HUD (DRGR generates a version of the report that the grantee can download, save, and post).

The Office of Management and Budget has established October 1, 2010 as the deadline for Federal agencies to initiate sub-award reporting in compliance with the Federal Funding Accountability and Transparency Act (Pub. L. 109–282) (FFATA). NSP3 grantees will be required to comply with this additional reporting requirement. Additional HUD guidance on compliance with the FFATA requirements is forthcoming.

Requirements

1. Performance report alternative requirement. The Secretary may specify the form and timing of reports provided by the grantee under both 42 U.S.C. 5304(e) (the HCD Act) and 42 U.S.C. 12708 (NAHA). Therefore, the consolidated plan regulation at 24 CFR 91.520 is waived and the alternative reporting form and timing for the NSP funds is that:

a. Each grantee must enter its NSP Action Plan amendment or abbreviated plan into HUD's web-based DRGR system in sufficient detail to meet the NSP action plan content requirements of this notice and to serve as the basis for acceptable performance reports.

b. NSP1 and NSP3 grantees must submit a quarterly performance report, as HUD prescribes, no later than 30 days following the end of each quarter, beginning 30 days after the completion of the first full calendar quarter after grant award and continuing until the end of the grant. In addition to this quarterly performance reporting, beginning three months prior to its use or expenditure deadline, as applicable, each grantee will report monthly on its NSP use and expenditure of funds, and continuing monthly until reported total uses or expenditure of funds are equal to or greater than the total NSP grant or the deadline occurs. After HUD has accepted a report from a grantee showing such use or expenditure of funds, the monthly reporting requirement will end. Quarterly reports will continue until all NSP funds (including program income) have been expended and those expenditures are included in a report to HUD, or until HUD issues other instructions. Each report will include information about the uses of funds, including, but not limited to, the project name, activity, location, national objective, funds budgeted and expended, the funding source and total amount of any non-NSP funds, numbers of properties and housing units, beginning and ending dates of activities, beneficiary characteristics, and numbers of low- and moderate-income persons or households benefiting. Reports must be submitted using HUD's web-based DRGR system and, at the time of submission, be posted prominently on the grantee's official Web site.

c. Additional reporting requirements consistent with the Federal Funding Accountability and Transparency Act will be required for NSP3 Grantees. HUD guidance on these requirements is forthcoming.

P. FHA First Look Program

The Department notes that it is an eligible use of NSP grant funds to acquire and redevelop FHA foreclosed properties. The Federal Housing Administration's (FHA) First Look sales method provides NSP grantees exclusive access to review and purchase newly conveyed FHA real estate-owned (REO) properties that are located in their designated areas. Grantees will have the opportunity to make a purchase offer on a property prior to it being made available to other entities. NSP grantees can purchase these properties at up to a 10% discount from the appraised value. Further information about First Look was published in the **Federal Register** on July 15, 2010 (75 FR 41225), and is also available online at: *http://edocket.access.gpo.gov/2010/pdf/2010-17335.pdf.*

HUD will provide technical assistance on its Web site regarding how these programs can effectively interact. Grantees may also contact their local HUD FHA field office for further information.

Q. Purchase Discount

Background

HERA Section 2301(d)(1) limits the purchase price of a foreclosed home or residential property, as follows:

> Any purchase of a foreclosed upon home or residential property under this section shall be at a discount from the current market appraised value of the home or property, taking into account its current condition, and such discount shall ensure that purchasers are paying below-market value for the home or property.

To ensure that uncertainty over the meaning of this section does not delay program implementation, HUD is

defining "current market appraised value" in this notice. For mortgagee foreclosed properties, HUD is requiring that grantees seek to obtain the "maximum reasonable discount" from the mortgagee, taking into consideration likely "carrying costs" of the mortgagee if it were to not sell the property to the grantee or subrecipient. HUD has adopted an approach that requires a minimum discount of one percent for each foreclosed upon home or residential property purchased with NSP funds.

Requirements

1. Individual purchase transaction. Each foreclosed-upon home or residential property shall be purchased at a discount of at least one percent from the current market-appraised value of the home or property.

2. An NSP grantee may not provide NSP funds to another party to finance an acquisition of tax foreclosed (or any other) properties from itself, other than to pay necessary and reasonable costs related to the appraisal and transfer of title. If NSP funds are used to pay such costs when property owned by the grantee is conveyed to a subrecipient, homebuyer, developer, or other jurisdiction, the property is NSP-assisted and subject to all program requirements, such as requirements for NSP-eligible use and benefit to income-qualified persons. This section does not preclude payment of tax liens on property that is not owned by the grantee or payment of current taxes while the property is being redeveloped or held in a land bank.

3. The address, appraised value, purchase offer amount, and discount amount of each property purchase must be documented in the grantee's program records. The address of each acquired property must be recorded in DRGR.

R. Removal of Annual Requirements

Requirement

Throughout 24 CFR parts 91 and 570, all references to "annual" requirements such as submission of plans and reports are waived to the extent necessary to allow the provisions of this notice to apply to NSP funds, with no recurring annual requirements other than those related to civil rights and fair housing certifications and requirements.

S. Affirmatively Furthering Fair Housing

Nothing in this notice may be construed as affecting each grantee's responsibility to carry out its certification to affirmatively further fair housing. HUD encourages each grantee to review its analysis of impediments to fair housing choice to determine whether an update is necessary because of current market conditions or other factors. Non-entitlement local government grantees must affirmatively further fair housing by adopting and following procedures and requirements to affirmatively market NSP3-assisted housing opportunities. This means that they will affirmatively market NSP3 assisted units and carry out NSP3 activities that further fair housing through innovative housing design or construction to increase access for persons with disabilities, language assistance services to persons with limited English proficiency (on the basis of national origin), or location of new or rehabilitated housing in a manner that provides greater housing choice or mobility for persons in classes protected by the Fair Housing Act, and maintain records reflecting the actions in this regard.

T. Certifications

Background

HUD is substituting alternative certifications. The alternative certifications are tailored to NSP3 grants and remove certifications and references that are appropriate only to the annual CDBG formula program. NSP1 and NSP2 certifications have already been submitted to HUD in accordance with the requirements of the NSP1 Notice and the NSP2 NOFA.

Requirements

1. *Certifications for states and for entitlement communities, alternative requirement.* Although the NSP3 is being implemented as a substantial amendment to the current annual action plan, HUD is requiring submission of this alternative set of certifications as a conforming change, reflecting alternative requirements and waivers under this notice. Each jurisdiction will submit the following certifications:

1. Affirmatively furthering fair housing. The jurisdiction certifies that it will affirmatively further fair housing, which means that it will conduct an analysis to identify impediments to fair housing choice within the jurisdiction, take appropriate actions to overcome the effects of any impediments identified through that analysis, and maintain records reflecting the analysis and actions in this regard.

2. Anti-displacement and relocation plan. The applicant certifies that it has in effect and is following a residential anti-displacement and relocation assistance plan.

3. Anti-lobbying. The jurisdiction must submit a certification with regard to compliance with restrictions on lobbying required by 24 CFR part 87, together with disclosure forms, if required by that part.

4. Authority of jurisdiction. The jurisdiction certifies that the consolidated plan or abbreviated plan, as applicable, is authorized under state and local law (as applicable) and that the jurisdiction possesses the legal authority to carry out the programs for which it is seeking funding, in accordance with applicable HUD regulations and other program requirements.

5. Consistency with plan. The jurisdiction certifies that the housing activities to be undertaken with NSP funds are consistent with its consolidated plan or abbreviated plan, as applicable.

6. Acquisition and relocation. The jurisdiction certifies that it will comply with the acquisition and relocation requirements of the Uniform Relocation Assistance and Real Property Acquisition Policies Act of 1970, as amended (42 U.S.C. 4601), and implementing regulations at 49 CFR part 24, except as those provisions are modified by the notice for the NSP program published by HUD.

7. Section 3. The jurisdiction certifies that it will comply with section 3 of the Housing and Urban Development Act of 1968 (12 U.S.C. 1701u), and implementing regulations at 24 CFR part 135.

8. Citizen participation. The jurisdiction certifies that it is in full compliance and following a detailed citizen participation plan that satisfies the requirements of Sections 24 CFR 91.105 or 91.115, as modified by NSP requirements.

9. Following a plan. The jurisdiction certifies it is following a current consolidated plan (or Comprehensive Housing Affordability Strategy) that has been approved by HUD. [Only States and entitlement jurisdictions use this certification.]

10. Use of funds. The jurisdiction certifies that it will comply with the Dodd-Frank Wall Street Reform and Consumer Protection Act and Title XII of Division A of the American Recovery and Reinvestment Act of 2009 by spending 50 percent of its grant funds within 2 years, and spending 100 percent within 3 years, of receipt of the grant.

11. The jurisdiction certifies:

a. That all of the NSP funds made available to it will be used with respect to individuals and families whose

incomes do not exceed 120 percent of area median income; and

b. The jurisdiction will not attempt to recover any capital costs of public improvements assisted with CDBG funds, including Section 108 loan guaranteed funds, by assessing any amount against properties owned and occupied by persons of low- and moderate-income, including any fee charged or assessment made as a condition of obtaining access to such public improvements. However, if NSP funds are used to pay the proportion of a fee or assessment attributable to the capital costs of public improvements (assisted in part with NSP funds) financed from other revenue sources, an assessment or charge may be made against the property with respect to the public improvements financed by a source other than CDBG funds. In addition, with respect to properties owned and occupied by moderate-income (but not low-income) families, an assessment or charge may be made against the property with respect to the public improvements financed by a source other than NSP funds if the jurisdiction certifies that it lacks NSP or CDBG funds to cover the assessment.

12. Excessive force. The jurisdiction certifies that it has adopted and is enforcing:

a. A policy prohibiting the use of excessive force by law enforcement agencies within its jurisdiction against any individuals engaged in nonviolent civil rights demonstrations; and

b. A policy of enforcing applicable state and local laws against physically barring entrance to, or exit from, a facility or location that is the subject of such nonviolent civil rights demonstrations within its jurisdiction.

13. Compliance with anti-discrimination laws. The jurisdiction certifies that the NSP grant will be conducted and administered in conformity with Title VI of the Civil Rights Act of 1964 (42 U.S.C. 2000d), the Fair Housing Act (42 U.S.C. 3601–3619), and implementing regulations.

14. Compliance with lead-based paint procedures. The jurisdiction certifies that its activities concerning lead-based paint will comply with the requirements of part 35, subparts A, B, J, K, and R of this title.

15. Compliance with laws. The jurisdiction certifies that it will comply with applicable laws.

2. *Certifications for Non-Entitlement Local Governments, alternative requirement.*

For non-entitlement local government grantees that do not have annual action plans to amend, NSP3 is being implemented through the submission of an abbreviated plan under 25 CFR 91.235. HUD is requiring submission of this alternative set of certifications as a conforming change, reflecting alternative requirements and waivers under this notice. Each jurisdiction will submit the following certifications:

1. Affirmatively furthering fair housing. The jurisdiction certifies that it will affirmatively further fair housing.

2. Anti-displacement and relocation plan. The applicant certifies that it has in effect and is following a residential anti-displacement and relocation assistance plan.

3. Anti-lobbying. The jurisdiction must submit a certification with regard to compliance with restrictions on lobbying required by 24 CFR part 87, together with disclosure forms, if required by that part.

4. Authority of jurisdiction. The jurisdiction certifies that the consolidated plan or abbreviated plan, as applicable, is authorized under state and local law (as applicable) and that the jurisdiction possesses the legal authority to carry out the programs for which it is seeking funding, in accordance with applicable HUD regulations and other program requirements.

5. Consistency with plan. The jurisdiction certifies that the housing activities to be undertaken with NSP funds are consistent with its consolidated plan or abbreviated plan, as applicable.

6. Acquisition and relocation. The jurisdiction certifies that it will comply with the acquisition and relocation requirements of the Uniform Relocation Assistance and Real Property Acquisition Policies Act of 1970, as amended (42 U.S.C. 4601), and implementing regulations at 49 CFR part 24, except as those provisions are modified by the notice for the NSP program published by HUD.

7. Section 3. The jurisdiction certifies that it will comply with section 3 of the Housing and Urban Development Act of 1968 (12 U.S.C. 1701u), and implementing regulations at 24 CFR part 135.

8. Citizen participation. The jurisdiction certifies that it is in full compliance and following a detailed citizen participation plan that satisfies the requirements of Sections 24 CFR 91.105 or 91.115, as modified by NSP requirements.

9. Use of funds. The jurisdiction certifies that it will comply with the Dodd-Frank Wall Street Reform and Consumer Protection Act and Title XII of Division A of the American Recovery and Reinvestment Act of 2009 by spending 50 percent of its grant funds within 2 years, and spending 100 percent within 3 years, of receipt of the grant.

10. The jurisdiction certifies:

a. That all of the NSP funds made available to it will be used with respect to individuals and families whose incomes do not exceed 120 percent of area median income; and

b. The jurisdiction will not attempt to recover any capital costs of public improvements assisted with CDBG funds, including Section 108 loan guaranteed funds, by assessing any amount against properties owned and occupied by persons of low- and moderate-income, including any fee charged or assessment made as a condition of obtaining access to such public improvements. However, if NSP funds are used to pay the proportion of a fee or assessment attributable to the capital costs of public improvements (assisted in part with NSP funds) financed from other revenue sources, an assessment or charge may be made against the property with respect to the public improvements financed by a source other than CDBG funds. In addition, with respect to properties owned and occupied by moderate-income (but not low-income) families, an assessment or charge may be made against the property with respect to the public improvements financed by a source other than NSP funds if the jurisdiction certifies that it lacks NSP or CDBG funds to cover the assessment.

11. Excessive force. The jurisdiction certifies that it has adopted and is enforcing:

a. A policy prohibiting the use of excessive force by law enforcement agencies within its jurisdiction against any individuals engaged in nonviolent civil rights demonstrations; and

b. A policy of enforcing applicable state and local laws against physically barring entrance to, or exit from, a facility or location that is the subject of such nonviolent civil rights demonstrations within its jurisdiction.

12. Compliance with anti-discrimination laws. The jurisdiction certifies that the NSP grant will be conducted and administered in conformity with Title VI of the Civil Rights Act of 1964 (42 U.S.C. 2000d), the Fair Housing Act (42 U.S.C. 3601–3619), and implementing regulations.

13. Compliance with lead-based paint procedures. The jurisdiction certifies that its activities concerning lead-based paint will comply with the requirements of part 35, subparts A, B, J, K, and R of this title.

14. Compliance with laws. The jurisdiction certifies that it will comply with applicable laws.

U. Additional NSP3 Requirements—Preferences for Rental Housing and Local Hiring

The NSP3 allocation included statutory language requiring grantees to "establish procedures to create preferences for the development of affordable rental housing for properties assisted with NSP3 funds." HUD is requiring grantees to describe such procedures as part of their substantial amendments or abbreviated plans as described in Section II.B. above.

Grantees also "shall, to the maximum extent feasible, provide for the hiring of employees who reside in the vicinity, as such term is defined by the Secretary, of projects funded under this section or contract with small businesses that are owned and operated by persons residing in the vicinity of such projects." For the purposes of administering this requirement, HUD is adopting the Section 3 applicability thresholds for community development assistance at 24 CFR 135.3(a)(3)(ii). **Note:** The NSP3 local hiring requirement does not replace the responsibilities of grantees under Section 3 of the Housing and Urban Development Act of 1968 (12 U.S.C. 1701u), and implementing regulations at 24 CFR part 135, except to the extent the obligations may be in direct conflict.

For the purposes of NSP3, HUD defines "vicinity" as each neighborhood identified by the NSP3 grantee as being the areas of greatest need. *See* section II.B.2. Small business means a business that meets the criteria set forth in section 3(a) of the Small Business Act. *See* 42 U.S.C. 5302(a)(23).

V. Note on Statutory Limitation on Distribution of Funds

Section 2304 of HERA and 1479(a)(7)(A) of the Dodd-Frank Act states that none of the funds made available under this Title or title IV shall be distributed to an organization that has been convicted of a violation under Federal law relating to an election for Federal office; or an organization that employs applicable individuals. Section 1479(a)(7)(B) defines applicable individuals.

W. Information Collection Approval Note

HUD has approval from the Office of Management and Budget (OMB) for information collection requirements in accordance with the Paperwork Reduction Act of 1995 (44 U.S.C. 3501–3520). OMB approval is under OMB control number 2506–0165. In accordance with the Paperwork Reduction Act, HUD may not conduct or sponsor and a person is not required to respond to, a collection of information, unless the collection displays a valid control number.

X. Duration of Funding

The appropriation accounting provisions in 31 U.S.C. 1551–1557, added by section 1405 of the National Defense Authorization Act for Fiscal Year 1991 (Pub. L. 101–510), limit the availability of certain appropriations for expenditure. Such a limitation may not be waived. The appropriations acts for NSP1 and NSP3 grants direct that these funds be available until expended.

Catalog of Federal Domestic Assistance

The Catalog of Federal Domestic Assistance numbers for grants made under NSP are as follows: 14.218; 14.225; and 14.228.

Finding of No Significant Impact

A Finding of No Significant Impact with respect to the environment has been made in accordance with HUD regulations at 24 CFR part 50, which implement section 102(2)(C) of the National Environmental Policy Act of 1969 (42 U.S.C. 4332(C)(2)). The Finding of No Significant Impact is available for public inspection between 8 a.m. and 5 p.m. weekdays in the Office of the Rules Docket Clerk, Office of General Counsel, Department of Housing and Urban Development, 451 Seventh Street, SW., Room 10276, Washington, DC 20410–0500.

Establishment of Formula

The funding formula set out in Attachment B to this notice was established by HUD on August 18, 2010.

Dated: October 13, 2010.

Mercedes M. Márquez,

Assistant Secretary for Community Planning and Development.

Attachments

A—Formula Allocation
B—NSP3 Formula and Allocation of Funds
C—Recommended Green and Sustainable Practices

Attachment A

HUD's Methodology for Allocating the Funds for Neighborhood Stabilization Program 1 (NSP1)

HERA calls for allocating funds "to States and units of general local government with the greatest need, as such need is determined in the discretion of the Secretary based on—

(A) The number and percentage of home foreclosures in each State or unit of general local government;

(B) the number and percentage of homes financed by a subprime mortgage related loan in each State or unit of general local government; and

(C) the number and percentage of homes in default or delinquency in each State or unit of general local government."

It further directs that "each State shall receive not less than 0.5 percent of funds". The allocation formula operates as follows. In this formula, the primary data on foreclosure rates, subprime loan rates, and rates of loans delinquent or in default come from the Mortgage Bankers Association National Delinquency Survey (MBA–NDS). Because the MBA–NDS may have uneven coverage from state-to-state in respect to the total number of mortgages reported, the total count of mortgages is calculated as the number of owner-occupied mortgages from the 2006 American Community Survey increased with data from the Home Mortgage Disclosure Act to capture the proportion of total mortgages made within a state made to investors between 2004 and 2006. The first step of the allocation is to make a "statewide" allocation using the following formula:

Statewide Allocation = $3.92 billion *	
{[0.70 * (*State's number of foreclosure starts in last 6 quarters*) *	(*Percent of all loans in state to enter foreclosure last 6 quarters)* +
National number of foreclosure starts in last 6 quarters	Percent of all loans in nation to enter foreclosure last 6 quarters
0.15 * (*State's number of subprime loans*) *	(*Percent of all loans in state subprime*) +
National number of subprime loans	Percent of all loans in nation subprime
0.10 * (*State's number of loans in default (90+ days delinquent).**	(*Percent of all loans in state in default*) +
National number of loans in default	Percent of all loans in nation in default
0.05 * (*State's number of loans 60 to 89 days delinquent*).*	*Percent of all loans in state 60 to 89 days delinquent*)] *
National number of loans 60 to 89 days delinquent	National percent of all loans 60 to 89 days delinquent

(*Pct of all addresses in state vacant in Census Tracts where more than 40% of the 2004 to 2006 loans were high cost*)}
Pct of all addresses in nation vacant in Census Tracts where more than 40% of the 2004 to 2006 loans were high cost

This formula allocates 70 percent of the funds based on the number and percent of foreclosures, 15 percent for subprime loans, 10 percent for loans in default (delinquent 90 days or longer), and 5 percent for loans delinquent 60 to 90 days. The higher weight on foreclosures is based on the emphasis the statute places on targeting foreclosed homes. The percentage adjustments, the rate of a problem in a state relative to the national rate of a problem, are restricted such that a state's allocation based on its proportional share of a problem cannot be increased or decreased by more than 30 percent.

Because HERA specifically indicates that the funds are needed for the "redevelopment of abandoned and foreclosed upon homes and residential properties," HUD has included a variable to proxy where abandonment of homes due to foreclosure is more likely, specifically each state's rate of vacant residential addresses in neighborhoods with a high proportion (more than 40 percent) of loans in 2004 to 2006 that were high cost. Information on vacant addresses is based on United States Postal Service data as of June 30, 2008 aggregated by HUD to the Census Tract level. The residential vacancy adjustment factor reflects a state's vacancy rate relative to the national average and cannot increase or decrease a state's proportional share of the allocation based on foreclosures, subprime loans, and delinquencies and defaults by more than 10 percent.

Finally, if a statewide allocation is less than $19.6 million, the statewide grant is increased to $19.6 million. Because this approach will result in a total allocation in excess of appropriation, all grant amounts above $19.6 million are reduced pro-rata to make the total allocation equal to the total appropriation.

From each statewide allocation, a substate allocation is made as follows:

- Each state government is allocated $19.6 million
- If the statewide allocation is more than $19.6 million, the remaining funds are allocated to FY 2008 CDBG entitlement cities, urban counties, and non-entitlement balance of state proportional to relative need.
- If a local government receives less than $2 million under this sub-allocation, their grant is rolled up into the state government grant.

Note that HUD has determined that HERA's direction that a minimum of $19.6 million be allocated to the state means that a minimum grant must be provided to each state government of $19.6 million. As a result, this approach provides state governments with proportionally more funding than their estimated need. As such, state governments should use their best judgment to serve both those areas not receiving a direct grant and those areas that do receive a direct grant, making sure that the total of all funds in the state are going proportionally more to those places (as prescribed by HERA):

- "With the greatest percentage of home foreclosures;
- With the highest percentage of homes financed by a subprime mortgage related loan; and
- Identified by the State or unit of general local government as likely to face a significant rise in the rate of home foreclosures."

For the amount of funds above each state's $19.6 million, the remaining funds are allocated among the entitlement communities and non-entitlement balances using the following formula:

Local Allocation = (Statewide Allocation − $19,600,000) *
[(*Local estimated number of foreclosure starts in last 6 quarters*) *
State total number of foreclosure starts in last 6 quarters
Local vacancy rate in Census Tracts with more than 40% of the loans High-cost)]
State vacancy rate in Census Tracts with more than 40% of the loans High-cost

Where: The residential vacancy rate adjustment cannot increase or reduce a local jurisdiction's allocation by more than 30 percent and the estimated number of foreclosures is calculated based on a predicted foreclosure rate times the estimated number of mortgages in a community.

HUD analysis shows that 75 percent of the variance between states on foreclosure rates can be explained by three variables available from public data:

- Office of Federal Housing Enterprise Oversight (OFHEO) data on change in home values as of June 2008 compared to peak home value since 2000.
- Percent of all loans made between 2004 and 2006 that are high cost as reported in the Home Mortgage Disclosure Act (HMDA).
- Unemployment rate as of June 2008 (from Bureau of Labor Statistics).

Because these three variables are publicly available for all CDBG eligible communities and they are good predictors of foreclosure risk, they are used in a model to calculate the estimated number of foreclosures in each jurisdiction within a state. The formula used is as follows:

Predicted Foreclosure Rate = − 2.211
− (0.131 × Percent change in MSA OFHEO current price relative to the maximum in past 8 years)
+ (0.152*Percent of total loans made between 2004 and 2006 that are high cost)
+ (0.392*Percent unemployed in the place our county in June 2008).

This predicted foreclosure rate is then multiplied times the estimated number of mortgages within a jurisdiction (number of HMDA loans made between 2004 and 2006 times the ratio of ACS 2006 data on total mortgages in state/HMDA loans in state). This "estimated number of mortgages in the jurisdiction" is further adjusted such that the estimated number of foreclosures from the model will equal the total foreclosure starts in the state from the Mortgage Bankers Association National Delinquency Survey.

As noted above, for entitlement cities and urban counties that would receive an NSP allocation of less than $2 million, the funds are allocated to the state grantee. The District of Columbia and the four Insular Areas receive direct allocations and are not subject to the minimum grant threshold.

Because this funding is one-time funding and the eligible activities under the program are different enough from the regular program, HUD believes that a grantee must receive a minimum amount of $2 million to have adequate staffing to properly administer the program effectively. In addition, fewer grants will allow HUD staff to more effectively monitor grantees to ensure proper implementation of the program and reduce the risk for fraud, waste, and abuse.

Attachment B

HUD's Methodology for Allocating the Funds for Neighborhood Stabilization Program 3 (NSP3)

NEIGHBORHOOD STABILIZATION PROGRAM (NSP3) FUNDING UNDER DODD-FRANK WALL STREET REFORM AND CONSUMER PROTECTION ACT

State	Grantee	NSP3 Grant
Alaska	State of Alaska	$5,000,000
Alabama	State of Alabama	5,000,000
	Birmingham	2,576,151
	Alabama Total	7,576,151
Arkansas	State of Arkansas	5,000,000
Arizona	Avondale City	1,224,903
	State of Arizona	5,000,000

NEIGHBORHOOD STABILIZATION PROGRAM (NSP3) FUNDING UNDER DODD-FRANK WALL STREET REFORM AND CONSUMER PROTECTION ACT—Continued

State	Grantee	NSP3 Grant
	Chandler	1,332,011
	Glendale	3,718,377
	Maricopa County	4,257,346
	Mesa	4,019,457
	Mohave County	1,990,744
	Peoria City	1,198,780
	Phoenix	16,053,525
	Pinal County	3,168,315
	Surprise City	1,329,844
	Tucson	2,083,771
	Arizona Total	45,377,073
California	Apple Valley	1,463,014
	Bakersfield	3,320,927
	State of California	7,777,019
	Compton	1,436,300
	Contra Costa County	1,871,294
	Corona	1,317,310
	Fontana	2,695,735
	Fresno	3,547,219
	Fresno County	2,739,766
	Hemet	1,360,197
	Hesperia	1,785,047
	Imperial County	1,708,780
	Indio City	1,092,071
	Kern County	5,202,037
	Lancaster	2,364,566
	Long Beach	1,567,935
	Los Angeles	9,875,577
	Los Angeles County	9,532,569
	Madera County	1,659,017
	Merced	1,196,182
	Merced County	2,705,877
	Modesto	2,951,549
	Monterey County	1,284,794
	Moreno Valley	3,687,789
	Oakland	2,070,087
	Ontario	1,872,853
	Orange County	1,004,948
	Palmdale	2,310,023
	Perris City	1,342,449
	Pomona	1,235,629
	Rialto	1,936,370
	Richmond	1,153,172
	Riverside	3,202,152
	Riverside County	14,272,400
	Sacramento	3,762,329
	Sacramento County	4,595,671
	San Bernardino	3,277,401
	San Bernardino County	10,438,181
	San Joaquin County	4,398,543
	Santa Ana	1,464,113
	Solano County	1,622,757
	Stanislaus County	4,175,947
	Stockton	4,280,994
	Tulare County	2,845,529
	Vallejo	1,744,593
	Victorville	2,159,937
	California Total	149,308,651
Colorado	Adams County	1,997,322
	Aurora	2,445,282
	State of Colorado	5,098,309
	Colorado Springs	1,420,638
	Denver	2,700,279
	Greeley	1,203,745
	Pueblo	1,460,506
	Weld County	1,023,188
	Colorado Total	17,349,270
Connecticut	Bridgeport	1,215,150

NEIGHBORHOOD STABILIZATION PROGRAM (NSP3) FUNDING UNDER DODD-FRANK WALL STREET REFORM AND CONSUMER PROTECTION ACT—Continued

State	Grantee	NSP3 Grant
	State of Connecticut	5,000,000
	Hartford	1,029,926
	New Haven	1,041,579
	Waterbury	1,036,101
	Connecticut Total	9,322,756
District of Columbia	Washington, DC	5,000,000
Delaware	State of Delaware	5,000,000
Florida	Boynton Beach	1,168,808
	Brevard County	3,032,850
	Broward County	5,457,553
	Cape Coral	3,048,214
	Charlotte County	2,022,962
	Citrus County	1,005,084
	Clearwater	1,385,801
	Collier County	3,884,165
	Coral Springs	1,657,845
	Davie	1,171,166
	Daytona Beach	1,127,616
	Deerfield Beach	1,183,897
	Deltona	1,964,066
	Escambia County	1,210,487
	State of Florida	8,511,111
	Ft Lauderdale	2,145,921
	Ft Myers	1,539,941
	Hernando County	1,953,975
	Hialeah	2,198,194
	Hillsborough County	8,083,062
	Hollywood	2,433,001
	Indian River County	1,500,428
	Jacksonville-Duval County	7,102,937
	Kissimmee	1,042,299
	Lake County	3,199,585
	Lakeland	1,303,139
	Lauderhill	1,500,609
	Lee County	6,639,174
	Manatee County	3,321,893
	Margate	1,148,877
	Marion County	4,589,714
	Martin County	1,563,770
	Melbourne	1,257,986
	Miami	4,558,939
	Miami Beach	1,475,088
	Miami Gardens City	1,940,337
	Miami-Dade County	20,036,303
	Miramar	2,321,827
	North Miami	1,173,374
	Orange County	11,551,158
	Orlando	3,095,137
	Osceola County	3,239,646
	Palm Bay	1,764,032
	Palm Beach County	11,264,172
	Palm Coast City	1,375,071
	Pasco County	5,185,778
	Pembroke Pines	2,330,542
	Pinellas County	4,697,519
	Plantation	1,216,427
	Polk County	5,443,116
	Pompano Beach	1,500,572
	Port St Lucie	3,515,509
	Sanford	1,037,697
	Sarasota	1,038,811
	Sarasota County	3,949,541
	Seminole County	3,995,178
	St Petersburg	3,709,133
	St. Lucie County	1,947,657
	Sunrise	1,775,162
	Tamarac	1,427,857
	Tampa	4,691,857
	Titusville	1,005,731
	Volusia County	3,670,516

NEIGHBORHOOD STABILIZATION PROGRAM (NSP3) FUNDING UNDER DODD-FRANK WALL STREET REFORM AND CONSUMER PROTECTION ACT—Continued

State	Grantee	NSP3 Grant
	West Palm Beach	2,147,327
	Florida Total	208,437,144
Georgia	Atlanta	4,906,758
	Augusta-Richmond County	1,161,297
	Carroll County	1,190,390
	Clayton County	3,796,167
	Cobb County	2,415,784
	Columbus-Muscogee County	1,128,174
	Dekalb County	5,233,105
	Douglas County	1,628,471
	Fulton County	3,094,885
	State of Georgia	18,679,977
	Gwinnett County	2,065,581
	Henry County	1,217,736
	Macon	1,503,897
	Paulding County	1,372,214
	Savannah	1,027,553
	Georgia Total	50,421,988
Hawaii	State of Hawaii	5,000,000
Iowa	State of Iowa	5,000,000
Idaho	State of Idaho	5,000,000
Illinois	Chicago	15,996,360
	Cook County	7,776,324
	State of Illinois	5,000,000
	Lake County	1,370,421
	Illinois Total	30,143,105
Indiana	Anderson	1,219,200
	Elkhart	1,022,717
	Elkhart County	1,193,194
	Fort Wayne	2,374,450
	Gary	2,717,859
	Hammond	1,243,934
	State of Indiana	8,235,625
	Indianapolis	8,017,557
	Kokomo	1,014,327
	Lake County	1,613,168
	Muncie	1,148,363
	South Bend	1,708,707
	Indiana Total	31,509,101
Kansas	Kansas City	1,137,796
	State of Kansas	5,000,000
	Kansas Total	6,137,796
Kentucky	Commonwealth of Kentucky	5,000,000
Louisiana	State of Louisiana	5,000,000
Massachusetts	Commonwealth of Massachusetts	5,000,000
	Springfield	1,197,000
	Worcester County	1,190,994
	Massachusetts Total	7,387,994
Maryland	State of Maryland	5,000,000
	Prince George's County	1,802,242
	Maryland Total	6,802,242
Maine	State of Maine	5,000,000
Michigan	Dearborn	1,027,354
	Detroit	21,922,710
	Flint	3,076,522
	Genesee County	2,663,219
	Grand Rapids	1,378,788
	Jackson County	1,162,482
	Lansing	1,162,508
	Macomb County	2,536,817
	State of Michigan	5,000,000
	Muskegon County	1,071,900
	Oakland County	2,080,700
	Pontiac	1,410,621

NEIGHBORHOOD STABILIZATION PROGRAM (NSP3) FUNDING UNDER DODD-FRANK WALL STREET REFORM AND CONSUMER PROTECTION ACT—Continued

State	Grantee	NSP3 Grant
	Saginaw	1,242,318
	Southfield	1,084,254
	St. Clair County	1,129,355
	Warren	1,735,633
	Wayne County	7,839,293
	Michigan Total	57,524,473
Minnesota	Anoka County	1,226,827
	Hennepin County	1,469,133
	Minneapolis	2,671,275
	State of Minnesota	5,000,000
	St Paul	2,059,877
	Minnesota Total	12,427,113
Missouri	Kansas City	1,823,888
	State of Missouri	5,000,000
	St Louis	3,472,954
	St. Louis County	2,813,762
	Missouri Total	13,110,604
Mississippi	State of Mississippi	5,000,000
Montana	State of Montana	5,000,000
North Carolina	State of North Carolina	5,000,000
North Dakota	State of North Dakota	5,000,000
Nebraska	State of Nebraska	5,000,000
	Omaha	1,183,085
	Nebraska Total	6,183,085
New Hampshire	State of New Hampshire	5,000,000
New Jersey	Essex County	1,851,984
	Newark	2,018,637
	State of New Jersey	5,000,000
	Paterson	1,196,877
	Union County	1,574,051
	New Jersey Total	11,641,549
New Mexico	State of New Mexico	5,000,000
Nevada	Clark County	16,156,114
	North Las Vegas	4,097,147
	Henderson	3,901,144
	Las Vegas	10,450,623
	State of Nevada	5,000,000
	Reno	1,973,724
	Washoe County	1,735,918
	Nevada Total	43,314,669
New York	Islip Town	1,429,561
	Nassau County	2,116,070
	New York	9,787,803
	State of New York	5,000,000
	Suffolk County	1,501,506
	New York Total	19,834,940
Ohio	Akron	2,674,298
	Butler County	1,327,123
	Canton	1,233,756
	Cincinnati	3,160,661
	Clark County	1,105,306
	Cleveland	6,793,290
	Columbus	4,843,460
	Cuyahoga County	2,551,533
	Dayton	3,115,780
	East Cleveland	1,068,142
	Euclid	1,031,230
	Hamilton County	1,469,242
	Lorain County	1,619,474
	Montgomery County	1,145,712
	State of Ohio	11,795,818
	Richland County	1,022,278
	Toledo	3,591,715
	Trumbull County	1,143,889

NEIGHBORHOOD STABILIZATION PROGRAM (NSP3) FUNDING UNDER DODD-FRANK WALL STREET REFORM AND CONSUMER PROTECTION ACT—Continued

State	Grantee	NSP3 Grant
	Youngstown	1,096,328
	Ohio Total	51,789,035
Oklahoma	State of Oklahoma	5,000,000
Oregon	State of Oregon	5,000,000
Pennsylvania	Commonwealth of Pennsylvania	5,000,000
Puerto Rico	Commonwealth of Puerto Rico	5,000,000
Rhode Island	Providence	1,309,231
	State of Rhode Island	5,000,000
	Rhode Island Total	6,309,231
South Carolina	State of South Carolina	5,615,020
	South Carolina Total	5,615,020
South Dakota	State of South Dakota	5,000,000
Tennessee	Memphis	5,195,848
	State of Tennessee	5,000,000
	Tennessee Total	10,195,848
Texas	Dallas	2,356,962
	Dallas County	1,364,426
	Harris County	1,925,917
	Hidalgo County	1,716,924
	Houston	3,389,035
	State of Texas	7,284,978
	Texas Total	18,038,242
Utah	State of Utah	5,000,000
Virginia	Richmond	1,254,970
	Commonwealth of Virginia	5,000,000
	Virginia Total	6,254,970
Vermont	State of Vermont	5,000,000
Washington	State of Washington	5,000,000
Wisconsin	Milwaukee	2,687,949
	State of Wisconsin	5,000,000
	Wisconsin Total	7,687,949
West Virginia	State of West Virginia	5,000,000
Wyoming	State of Wyoming	5,000,000
Insular Areas		300,000
	Total	970,000,000

Overview

The Dodd-Frank Wall Street Reform and Consumer Protection Act of 2010 provided an additional $1 billion for the Neighborhood Stabilization Program (NSP) that was originally established under the Housing and Economic Recovery Act of 2008.

The statute calls for allocating funds to States and local governments with the greatest need, as determined by:

(A) "The number and percentage of home foreclosures in each State or unit of general local government;

(B) "The number and percentage of homes financed by a subprime mortgages in each State or unit of general local government; and

(C) "The number and percentage of homes in default or delinquency in each State or unit of general local government."

The statute also requires that a minimum of 0.5 percent of the appropriation, $5 million be provided to each state.

The Department has determined that for NSP3, the states and local governments with the greatest need for neighborhood stabilization funding are those communities that have high numbers of foreclosed and/or vacant properties in the neighborhoods with the highest concentrations of foreclosures, delinquent loans, and subprime loans. The basic formula allocates funds based on the number of foreclosures and vacancies in the 20 percent of U.S. neighborhoods (Census Tracts) with the highest rates of homes financed by a subprime mortgage, are delinquent, or are in foreclosure. This basic allocation is adjusted to ensure that every state receives a minimum of $5 million. The net result is that these funds are highly targeted to communities with the most severe neighborhood problems associated with the foreclosure crisis.

Estimating Greatest Need

To target the funds to States and local communities with the greatest need, HUD estimated the number of loans 90 days delinquent or in foreclosure for each Census Tract in America. This estimate was based on a model that was comprised of three factors that explain most foreclosures and delinquent loans (*see* note 1):

- Rate of Subprime Loans. This is measured with HMDA data on high cost and high leverage loans made between 2004 and 2007. These data are available at the Census Tract (neighborhood) level.
- Increase in Unemployment Rate between March 2005 and March 2010. These data are from the BLS Local Area Unemployment Statistics, at the city and county level.
- Fall in Home Value from Peak to Trough. Home value data at the Metropolitan Area level is available quarterly through March 2010 from the Federal Housing Finance Agency Home Price Index.

In addition to wanting to capture loans that are currently delinquent or in the foreclosure process, HUD sought to capture the aggregate impact of the foreclosure crisis on individual neighborhoods between 2007 and 2010. To do this, HUD estimated for each neighborhood the number of foreclosure starts between January 2007 and March 2010 as well as the number of foreclosure

completions between January 2007 and June 2010 (*see* note 2). Each neighborhood was assigned the larger of the two estimates.

Finally, HUD has administrative data from the United States Postal Service on addresses not picking up mail for 90 days or longer. These data are very good current indicators of neighborhood stress from vacant housing. This number is adjusted using Census 2000 tract level data to remove vacant vacation properties from the count.

The Formula

Using the estimated rate of loans in foreclosure or delinquent, HUD identified the 20 percent of neighborhoods likely to be most distressed. This equates to an estimated serious delinquency rate (90 days delinquent or in foreclosure) of greater than 17.8 percent. Using the methodology described above, the national rate was estimated at 8.9 percent.[1]

For each place and balance of county in the United States we add up only from the 20 percent of neighborhoods with the greatest need the number of foreclosed homes between 2007 and 2010 and separately the number units 90 days or more vacant in March 2010.

This "jurisdiction level" file is then used to run a formula to allocate the funds available, $969,700,000. Sixty percent of these funds are allocated based on each jurisdiction's share of foreclosures and 40 percent of the funds are allocated based on each jurisdiction's share of vacancies.

Minimum Grant Threshold

If a place gets less than HUD's established minimum grant threshold of $1 million, its grant is rolled up into the county grant. If the county grant is less than the minimum grant threshold of $1 million, its grant is rolled up into the state grant.

State Minimum Grant of $5 million

For any state government that would receive less than $5 million, its grant is increased to $5 million with all grant amounts above the minimum grant threshold reduced on a pro-rata basis to only allocate the amounts available.

Note 1: Identifying Census Tracts with High Rates of Foreclosures, Delinquencies, and Subprime Loans:

To estimate which neighborhoods are likely to have high rates of foreclosures, delinquencies, and subprime loans, HUD used a July 2010 extract of county level serious delinquency rates from McDash Analytics to develop a predictive model using public data that was available for every Census Tract in the United States. The predictive model, which was weighted on number of mortgages in each county, was able to predict most of the variance between counties in their serious delinquency rate (R-square of 0.821). The model used is as follows:

0.523 (intercept)
+0.476 Unemployment Change 3/2005 to 3/2010 (BLS LAUS)
−0.176 Rate of low cost high leverage loans 2004 to 2007 (HMDA)
+0.521 Rate of high cost high leverage loans 2004 to 2007 (HMDA)
+0.090 Rate of high cost low leverage loans 2004 to 2007 (HMDA)
−0.188 Fall in Home Value Since Peak (FHFA Metro and Non-Metro Area)

The predictive rate of seriously delinquent mortgages was multiplied times the number of loans made between 2004 and 2007 in a Census Tract to estimate the number of seriously delinquent loans in a Census Tract.

Note 2: Calculating Number of Foreclosures at the Neighborhood Level:

To estimate the number of homes in a neighborhood that have completed, or are at risk of becoming Real Estate Owned in a Census Tract, was done by allocating the statewide total of the greater of the sum of all foreclosure completions between January 2007 and June 2010 (from RealtyTrac) or the sum of all foreclosure starts between January 2007 and March 2010 (from the Mortgage Bankers Association) based on each Tracts share of a states estimated number of seriously delinquent loans. The estimated number of seriously delinquent loans was calculated by multiplying the estimated rate of seriously delinquent loans times the number of mortgages made between 2004 and 2007 (from Home Mortgage Disclosure Act data).

Attachment C

NSP Recommended Energy Efficient and Environmentally-Friendly Green Elements

HUD strongly recommends that your proposed NSP3 program incorporate the following energy efficient and environmentally-friendly Green elements. No specific element is required. HUD encourages thoughtful, achievable consideration and implementation of energy efficient and environmentally friendly elements inside your NSP3 program.

HUD is providing the guidance below because the Department has become aware during the implementation of NSP1 that many grantees are not aware that many of their common community development practices, such as trying to help police and teachers live in the neighborhood in which they work, are also considered sustainable and environmentally friendly. Similarly, most affordable housing units are also smaller and can easily be made more energy efficient than larger units. The increased energy efficiency then serves to increase the long-term affordability of the units.

Transit Accessibility

Select NSP target areas that are transit accessible, for example those that are in a census tract with convenient bus service (local bus service every 20 minutes during rush hour or an express commuter bus); or bordering a census tract with a passenger rail stop or station (including, for example, commuter rail, subway, light rail, and streetcars).

Green Building Standards

Comply with the required NSP rehabilitation standards and also fund new construction and gut rehabilitation activities that will exceed the Energy Star for New Homes standard. Ensure that moderate rehabilitation or energy retrofits will purchase only Energy Star products and appliances. You may go further and require NSP homes to achieve an established environmental or energy efficiency standard such as Green Communities or equivalent.

Re-Use Cleared Sites

Re-use cleared sites in accordance with a comprehensive or neighborhood plan. Plan to re-use all demolition sites within the term of your NSP grant as replacement housing, for use as a community resource, or to provide an environmental function. Examples include community gardens, pocket parks, or floodplain impoundment areas.

Deconstruction

Deconstruction means salvaging and re-using materials resulting from demolition activities. It recycles building materials, and provides employment.

Renewable Energy

1. *Passive Solar.* Orient the building to make the greatest use of passive solar heating and cooling.
2. *Photovoltaic-ready.* Site, design, engineer and wire the development to accommodate installation of photovoltaic panels in the future.

Sustainable Site Design

1. *Transportation Choices.* Locate projects within a one-quarter mile of at least two, or one-half mile of at least four community and retail facilities.
2. *Connections to Surrounding Neighborhoods.* Provide three separate connections from the development to sidewalks or pathways in surrounding neighborhoods.
3. *Protecting Environmental Resources.* Do not locate the project within 100 feet of wetlands; 1,000 feet of a critical habitat; or on steep slopes, prime farmland or park land.
4. *Erosion and Sediment Control.* Implement EPA's Best Management Practices for erosion and sedimentation control during construction.
5. *Sustainable Landscaping.* Select native trees and plants that are appropriate to the site's soils and microclimate.
6. *Energy Efficient Landscaping.* Locate trees and plants to provide shading in the summer and allow for heat gain in the winter.

Water Conservation

1. *Efficient Irrigation.* Install low volume, non-spray irrigation system (such as drip irrigation, bubblers, or soaker hose).

Energy Efficient Materials

1. *Durable Materials.* Use materials that last longer than conventional counterparts such as stone, brick or concrete.
2. *Resource Efficient Materials.* Use layouts and advanced building techniques that reduce the amount of homebuilding material required.
3. *Heat Absorbing Materials.* Use materials that retain solar heat in winter and remain cool in summer.
4. *Solar-Reflective Paving.* Use light-colored/high-albedo materials and/or open-

[1] This less than the Mortgage Bankers Association National Delinquency Survey rate of 9.54 percent for March 2010 and slightly more than the McDash Analytics rate of 8.39 percent as of July 2010.

grid pavement with a minimum Solar Reflective index of 0.6 over at least 30 percent of the site's hardscaped areas.

5. *Local Source Materials.* Use materials from local sources that are close to the job site.

6. *Green Roofing.* Use Energy Star-compliant and high-emissive roofing, and/or install a Green (vegetated) roof for at least 50 percent of the roof area; or a combination of high-albedo and vegetated roof covering 75 percent of the roof area.

Healthy Homes

1. *Green Label Certified Floor Covering.* Do not install carpets in basements, entryways, laundry rooms, bathrooms or kitchens; if using carpet, use the Carpet and Rug Institute's Green Label certified carpet and pad.

2. *Healthy Flooring Materials: Alternatives.* Use non-vinyl, non-carpet floor coverings in all rooms.

3. *Healthy Flooring Materials: Reducing Dust.* Install a whole-house vacuum system with high-efficiency particulate air filtration.

4. *Sealing Joints.* Seal all wall, floor and joint penetrations to prevent pest entry; provide rodent and corrosion proof screens (*e.g.,* copper or stainless steel mesh) for large openings.

5. *Termite-Resistant Materials.* Use termite-resistant materials in areas known to be infested.

6. *Tub and Shower Enclosures: Moisture Prevention.* Use one-piece fiberglass or similar enclosure or, if using any form of grouted material, use backing materials such as cement board, fiber cement board, fiber-glass reinforced board or cement plaster.

7. *Green Maintenance Guide.* Provide a guide for homeowners and renters that explains the intent, benefits, use and maintenance of Green building features, and encourages additional Green activities such as recycling, gardening and use of healthy cleaning materials.

8. *Resident Orientation.* Provide a walk-through and orientation to the homeowner or new tenants.

[FR Doc. 2010–26292 Filed 10–18–10; 8:45 am]

BILLING CODE 4210–67–P

DEPARTMENT OF THE INTERIOR

Bureau of Ocean Energy Management, Regulation and Enforcement

[Docket No. BOEM–2010–0052]

BOEMRE Information Collection Activity: 1010–0182, Increased Safety Measures for Energy Development on the OCS NTL, Extension of a Collection; Comment Request

AGENCY: Bureau of Ocean Energy Management, Regulation and Enforcement (BOEMRE), Interior.

ACTION: Notice of an extension of an information collection (1010–0182).

SUMMARY: To comply with the Paperwork Reduction Act of 1995 (PRA), BOEMRE is inviting comments on a collection of information that we will submit to the Office of Management and Budget (OMB) for review and approval. The information collection request (ICR) concerns the paperwork requirements in Notice to Lessees and Operators (NTL) "No. 2010–N05, Increased Safety Measures for Energy Development on the OCS."

DATES: Submit written comments by December 20, 2010.

FOR FURTHER INFORMATION CONTACT: Cheryl Blundon, Regulations and Standards Branch at (703) 787–1607. You may also contact Cheryl Blundon to obtain a copy, at no cost, of NTL No. 2010–N05 that requires the subject collection of information.

ADDRESSES: You may submit comments by either of the following methods listed below.

- *Electronically:* go to *http://www.regulations.gov.* In the entry titled "Enter Keyword or ID," enter docket ID BOEM–2010–0052 then click search. Follow the instructions to submit public comments and view supporting and related materials available for this collection. BOEMRE will post all comments.
- *E-mail cheryl.blundon@boemre.gov.* Mail or hand-carry comments to the Department of the Interior; Bureau of Ocean Energy Management, Regulation and Enforcement; *Attention:* Cheryl Blundon; 381 Elden Street, MS–4024; Herndon, Virginia 20170–4817. Please reference ICR 1010–0182 in your comment and include your name and return address.

SUPPLEMENTARY INFORMATION:

Title: Increased Safety Measures for Energy Development on the OCS, NTL No. 2010–N05.

OMB Control Number: 1010–0182.

Abstract: The Outer Continental Shelf (OCS) Lands Act, as amended (43 U.S.C. 1331 *et seq.* and 43 U.S.C. 1801 *et seq.*), authorizes the Secretary of the Interior (Secretary) to prescribe rules and regulations to manage the mineral resources of the OCS. Such rules and regulations will apply to all operations conducted under a lease, right-of-use and easement, and pipeline right-of-way. Operations on the OCS must preserve, protect, and develop oil and natural gas resources in a manner that is consistent with the need to make such resources available to meet the Nation's energy needs as rapidly as possible; to balance orderly energy resource development with protection of human, marine, and coastal environments; to ensure the public a fair and equitable return on the resources of the OCS; preserve and maintain free enterprise competition; and ensure that the extent of oil and natural gas resources of the OCS is assessed at the earliest practicable time. 43 U.S.C. 1332(6) states that "operations in the outer Continental Shelf should be conducted in a safe manner by well-trained personnel using technology, precautions, and techniques sufficient to prevent or minimize the likelihood of blowouts, loss of well control, fires, spillages, physical obstruction to other users of the waters or subsoil and seabed, or other occurrences which may cause damage to the environment or to property, or endanger life or health."

To carry out these responsibilities, BOEMRE issues regulations to ensure that operations in the OCS will meet statutory requirements; provide for safety and protect the environment; and result in diligent exploration, development, and production of OCS leases. In addition, we also issue NTLs that provide clarification, explanation, and interpretation of our regulations. These NTLs are also used to convey purely informational material and to cover situations that might not be adequately addressed in our regulations. The latter is the case for the information collection required in the NTL. Because of the unusual nature of this information collection, issuing an NTL is the appropriate means to collect the information at the time of the event.

The subject of this ICR is an NTL based on the recommendations in the May 27, 2010, Report from the Secretary of the Interior to the President of the United States, *Increased Safety Measures for Energy Development on the Outer Continental Shelf* (Report). BOEMRE issued NTLs for operators to comply with the requirements and recommendations of the report as a result of the Deepwater Horizon oil spill in the Gulf of Mexico. This collection pertains to one NTL, covered under the regulations at 30 CFR part 250, subparts, A, D, E, and F. The primary information collections for these regulations are approved under the Office of Management and Budget (OMB) Control Numbers 1010–0114, 1010–0141, 1010-0067, and 1010–0043, respectively. However, BOEMRE believes that the paperwork burdens in the NTL are in addition to those currently approved. Only one of the requirements in the NTL has not yet been fully met; therefore, we are renewing that requirement in this collection to allow operators and/or lessees more response time than allowed by the original emergency OMB request.

BOEMRE issued this NTL for lessees and operators to comply with the requirements and recommendations of

the report as a result of the Deepwater Horizon accident and subsequent oil spill in the Gulf of Mexico. These events highlight the importance of ensuring safe operations on the OCS.

The information to be collected is necessary for BOEMRE to assess safety equipment; ensure the OCS is managed in a safe manner that includes considering available environmental information and implementing best available and safest technology. BOEMRE will use the information collected to evaluate each operator to ensure compliance to BOEMRE regulations, review documentation for corrective action, and assess each risk analysis of deepwater drilling.

We will protect information from respondents considered proprietary under the Freedom of Information Act (5 U.S.C. 552) and its implementing regulations (43 CFR part 2), under regulations at 30 CFR 250.197, Data and information to be made available to the public or for limited inspection, and 30 CFR 252, OCS Oil and Gas Information Program. No items of a sensitive nature are collected. Responses are mandatory.

Frequency: On occasion.

Description of Respondents: Potential respondents comprise Federal oil, gas, or sulphur lessees and/or operators.

Estimated Reporting and Recordkeeping Hour Burden: The currently approved annual reporting burden for this collection is 9,028 hours. The following chart details the individual components and respective hour burden estimates of this ICR. In calculating the burdens, we assumed that respondents perform certain requirements in the normal course of their activities. We consider these to be usual and customary and took that into account in estimating the burden.

NTL No. 2010–N05—Reporting requirement	Hour burden
BOP Certification Requirements for Floating Drilling Operations.—Submit independent third party (ITP) physical inspection and design review of BOP in accordance with OEM specs and standards [will cost approximately $25,000 to $250,000 depending on size etc., average cost = $112,500]. Include description of the ITP's qualifications.	$112,500 per third-party physical inspection and design reviews—30 mins.

Estimated Reporting and Recordkeeping Non-Hour Cost Burden: We have identified one non-hour paperwork cost burdens for this collection. The non-hour cost burden is $112,500 for each third party physical inspection and design review.

Public Disclosure Statement: The PRA (44 U.S.C. 3501, *et seq.*) provides that an agency may not conduct or sponsor a collection of information unless it displays a currently valid OMB control number. Until OMB approves a collection of information, you are not obligated to respond.

Comments: Before submitting an ICR to OMB, PRA section 3506(c)(2)(A) requires each agency "* * * to provide notice * * * and otherwise consult with members of the public and affected agencies concerning each proposed collection of information * * *". Agencies must specifically solicit comments to: (a) Evaluate whether the proposed collection of information is necessary for the agency to perform its duties, including whether the information is useful; (b) evaluate the accuracy of the agency's estimate of the burden of the proposed collection of information; (c) enhance the quality, usefulness, and clarity of the information to be collected; and (d) minimize the burden on the respondents, including the use of automated collection techniques or other forms of information technology.

Agencies must also estimate the non-hour paperwork cost burdens to respondents or recordkeepers resulting from the collection of information. Therefore, if you have costs to generate, maintain, and disclose this information, you should comment and provide your total capital and startup cost components or annual operation, maintenance, and purchase of service components. You should describe the methods you use to estimate major cost factors, including system and technology acquisition, expected useful life of capital equipment, discount rate(s), and the period over which you incur costs. Capital and startup costs include, among other items, computers and software you purchase to prepare for collecting information, monitoring, and record storage facilities. You should not include estimates for equipment or services purchased: (i) Before October 1, 1995; (ii) to comply with requirements not associated with the information collection; (iii) for reasons other than to provide information or keep records for the Government; or (iv) as part of customary and usual business or private practices.

We will summarize written responses to this notice and address them in our submission for OMB approval. As a result of your comments, we will make any necessary adjustments to the burden in our submission to OMB.

Public Comment Procedures: Before including your address, phone number, email address, or other personal identifying information in your comment, you should be aware that your entire comment—including your personal identifying information—may be made publicly available at any time. While you can ask us in your comment to withhold your personal identifying information from public review, we cannot guarantee that we will be able to do so.

BOEMRE Information Collection Clearance Officer: Arlene Bajusz (703) 787–1025.

Dated: October 14, 2010.

William S. Hauser,

Acting Chief, Office of Offshore Regulatory Programs.

[FR Doc. 2010–26296 Filed 10–18–10; 8:45 am]

BILLING CODE 4310–MR–P

DEPARTMENT OF THE INTERIOR

U.S. Geological Survey

[USGS–GX11LR000F60100]

Agency Information Collection Activities: Comment Request for the Consolidated Consumers' Report

AGENCY: U.S. Geological Survey (USGS), Interior.

ACTION: Notice of an extension of an existing information collection (1028–0070).

SUMMARY: We (the U.S. Geological Survey) will ask the Office of Management and Budget (OMB) to approve the information collection (IC) described below. As required by the Paperwork Reduction Act (PRA) of 1995, and as part of our continuing efforts to reduce paperwork and respondent burden, we invite the general public and other Federal agencies to take this opportunity to comment on this IC. This IC is scheduled to expire on March 31, 2011.

DATES: To ensure that we are able to consider your comments on this IC we must receive them on or before December 20, 2010.

ADDRESSES: Please submit a copy of your comments to Phadrea Ponds, Information Collection Clearance Officer, U.S. Geological Survey, 2150–C Centre Avenue, Fort Collins, CO 80526–8118 (mail); 970–226–9445 (phone); 970–226–9230 (fax); or *pondsp@usgs.gov* (e-mail). Please reference Information Collection 1028–0070 in the subject line.

FOR FURTHER INFORMATION CONTACT: Carleen Kostick at 703–648–7940 or by mail at U.S. Geological Survey, 985 National Center, 12201 Sunrise Valley Drive, Reston, VA 20192.

SUPPLEMENTARY INFORMATION:

I. Abstract

Respondents to this form supply the USGS with domestic consumption data of 12 metals and ferroalloys, some of which are considered strategic and critical. This information will be published as chapters in Minerals Yearbooks, monthly Mineral Industry Surveys, annual Mineral Commodity Summaries, and special publications, for use by Government agencies, industry, education programs, and the general public.

II. Data

OMB Control Number: 1028–0070.

Title: Consolidated Consumers' Report.

Type of Request: Extension of a currently approved collection.

Affected Public: U.S. nonfuel consumers of ferrous and related metals.

Respondent Obligation: Voluntary.

Frequency of Collection: Monthly and Annually.

Estimated Number of Annual Responses: 1,828.

Annual Burden Hours: 1,371 hours. We expect to receive 1,828 annual responses. We estimate an average of 45 minutes per response.

Estimated Reporting and Recordkeeping "Non-Hour Cost" Burden: We have not identified any "non-hour cost" burdens associated with this collection of information.

Public Disclosure Statement: The PRA (44 U.S.C. 3501, *et seq.*) provides that an agency may not conduct or sponsor a collection of information unless it displays a currently valid OMB control number.

III. Request for Comments

We are soliciting comments as to: (a) Whether the proposed collection of information is necessary for the agency to perform its duties, including whether the information is useful; (b) the accuracy of the agency's estimate of the burden of the proposed collection of information; (c) how to enhance the quality, usefulness, and clarity of the information to be collected; and (d) how to minimize the burden on the respondents, including the use of automated collection techniques or other forms of information technology.

Please note that the comments submitted in response to this notice are a matter of public record. We will include or summarize each comment in our request to OMB to approve this IC. Before including your address, phone number, e-mail address, or other personal identifying information in your comment, you should be aware that your entire comment, including your personal identifying information, may be made publicly available at any time. While you can ask OMB in your comment to withhold your personal identifying information from public review, we cannot guarantee that it will be done.

USGS Information Collection Clearance Officer: Phadrea Ponds 970–226–9445.

Dated: October 13, 2010.

John H. DeYoung, Jr.,

Director, National Minerals Information Center, U.S. Geological Survey.

[FR Doc. 2010–26226 Filed 10–18–10; 8:45 am]

BILLING CODE 4311–AM–P

DEPARTMENT OF THE INTERIOR

Bureau of Land Management

[LLNVS03000 L51010000.ER0000 LVRWF09 F8770 241A; 10–08807; MO#4500015810; TAS:14X5017]

Notice of Availability of Record of Decision for the NextLight Renewable Power, LLC, Silver State Solar Project Environmental Impact Statement

AGENCY: Bureau of Land Management, Interior.

ACTION: Notice of availability.

SUMMARY: The Bureau of Land Management (BLM) announces the availability of the Record of Decision (ROD) for the NextLight Renewable Power, LLC, Silver State Solar Project Environmental Impact Statement (EIS). The Department of the Interior Secretary signed the ROD on October 12, 2010, which constitutes the final decision of the Department.

ADDRESSES: Copies of the ROD are available upon request from the BLM Southern Nevada District Office, 4701 N. Torrey Pines Drive, Las Vegas, Nevada 89130, or at the following Web site: *http://www.blm.gov/nv/st/en/fo/lvfo.html.* Copies of the ROD are also available for public inspection at the BLM Southern Nevada District Office and the BLM Nevada State Office, 1340 Financial Blvd., Reno, Nevada.

FOR FURTHER INFORMATION CONTACT: Gregory Helseth, Renewable Energy Project Manager, *phone:* (702) 515–5173; *address:* BLM Southern Nevada District Office, 4701 N. Torrey Pines Drive, Las Vegas, Nevada 89130; *e-mail: Gregory_Helseth@blm.gov.*

SUPPLEMENTARY INFORMATION: The applicant, Nextlight Renewable Power, LLC, requested a right-of-way (ROW) authorization to construct, operate, maintain and decommission a 400-megawatt (MW) solar photovoltaic (PV) power plant and facilities. The Notice of Availability (NOA) for the Draft EIS analyzing impacts of the project and alternatives was released for public comment on April 16, 2010 (75 FR 19990). Four hundred eighty one comments were received on the Draft EIS. The comments were incorporated, where appropriate, to clarify the analysis presented in the Final EIS. The Environmental Protection Agency published the NOA for the Final EIS in the **Federal Register** on Friday, September 10, 2010 (75 FR 55326). The Final EIS analyzes 3 alternatives: A No Action Alternative, the Proposed Action, and a Modified Site Layout Alternative. These alternatives were shaped in part by comments received from the public and internal BLM review.

Alternative 1—No Action Alternative. Under this alternative, the BLM would deny a ROW for construction, operation, maintenance, and decommission of a 400–MW solar photovoltaic power plant on public lands administered by the BLM.

Alternative 2—Proposed Action. The Proposed Action Alternative is the construction, operation, maintenance and decommission of a solar facility utilizing passive PV technology. The project facilities would be constructed in 3 separate phases totaling 400–MW with a total surface disturbance of 2,967 acres. Phase 1 consists of a 60–MW direct current (50–MW alternating current) facility and is independent of the facilities identified in Phase 2 and Phase 3, which are inter-dependant facilities. Each facility component would be constructed as power purchase agreements and transmission infrastructure is in place and available to bring generated power to the market. Drainage controls would consist of a series of earthen drainage control berms that would contain surface runoff flows to existing primary drainages (storm water flow corridors) across the site.

Alternative 3—Modified Site Layout Alternative. The Modified Site Layout

Alternative is similar to the Proposed Action in development sequence and facilities, but contains additional drainage control structures to manage storm water run-off. Total surface disturbance for this alternative is 2,748 acres.

The ROD approves only the Phase 1 portion of Alternative 2, the Proposed Action. Phase 2 and Phase 3 of the Proposed Action are not authorized in the ROD and may be considered in the future when the necessary electric transmission upgrades are proposed. At that time, the BLM will prepare any necessary additional environmental review.

Authority: 40 CFR 1506.6 and 1506.10.

Robert V. Abbey,

Director, Bureau of Land Management.

[FR Doc. 2010–26264 Filed 10–18–10; 8:45 am]

BILLING CODE 4310–HC–P

INTERNATIONAL TRADE COMMISSION

[Investigation No. 332–325]

The Economic Effects of Significant U.S. Import Restraints: Seventh Update; Special Topic: Global Supply Chains

AGENCY: United States International Trade Commission.

ACTION: Notice of seventh update report and scheduling of public hearing.

SUMMARY: Following receipt of a request dated August 16, 2010 from the United States Trade Representative (USTR), the U.S. International Trade Commission (Commission) has announced its schedule for preparing the seventh update report in investigation No. 332–325, *The Economic Effects of Significant U.S. Import Restraints,* including the scheduling of a public hearing in connection with the investigation for December 16, 2010.

DATES:

November 29, 2010: Deadline for filing requests to appear at the public hearing.

November 29, 2010: Deadline for filing pre-hearing briefs and statements.

December 16, 2010: Public hearing.

January 6, 2011: Deadline for filing post-hearing briefs and statements.

February 7, 2011: Deadline for filing all other written submissions.

August 12, 2011: Transmittal of Commission report to USTR.

ADDRESSES: All Commission offices, including the Commission's hearing rooms, are located in the United States International Trade Commission Building, 500 E Street SW., Washington, DC. All written submissions should be addressed to the Secretary, United States International Trade Commission, 500 E Street SW., Washington, DC 20436. The public record for this investigation may be viewed on the Commission's electronic docket (EDIS) at *http://www.usitc.gov/secretary/edis.htm.*

FOR FURTHER INFORMATION CONTACT: Project Leader William Powers (*william.powers@usitc.gov* or 202–708–5405) or Deputy Project Leader Jose Signoret (*jose.signoret@usitc.gov* or 202–205–3125) for information specific to this investigation (the seventh update). For information on the legal aspects of this investigation, contact William Gearhart of the Commission's Office of the General Counsel (202–205–3091 or *william.gearhart@usitc.gov*). The media should contact Margaret O'Laughlin, Office of External Relations (202–205–1819 or *margaret.olaughlin@usitc.gov*). Hearing-impaired individuals may obtain information on this matter by contacting the Commission's TDD terminal at 202–205–1810. General information concerning the Commission may also be obtained by accessing its Internet server (*http://www.usitc.gov*). Persons with mobility impairments who will need special assistance in gaining access to the Commission should contact the Office of the Secretary at 202–205–2000.

Background: The Commission instituted this investigation under Section 332(g) of the Tariff Act of 1930 (19 U.S.C. 1332(g)) following receipt of an initial request from the USTR dated May 15, 1992. The request asked that the Commission assess the quantitative economic effects of significant U.S. import restraints on the U.S. economy and prepare periodic update reports after the initial report. The Commission published a notice of institution of the investigation in the **Federal Register** of June 17, 1992 (57 FR 27063). The first report was delivered to the USTR in November 1993, the first update in December 1995, and successive updates were delivered in 1999, 2002, 2004, 2007, and 2009. In this seventh update, as requested by the USTR in a letter dated August 16, 2010, the Commission will, in addition to the quantitative effects analysis similar to that included in prior reports, include an overview of global supply chains, including the economic forces behind them and current U.S. involvement in them. The USTR asked that the overview be accessible to readers who may not be professional economists. As in previous reports in this series, the seventh update will continue to assess the economic effects of significant import restraints on U.S. consumers and firms, the income and employment of U.S. workers, and the net economic welfare of the United States. This assessment will use the Commission's computable general equilibrium model. However, as per earlier instructions from the USTR, the Commission will not assess import restraints resulting from antidumping or countervailing duty investigations, section 337 and 406 investigations, or section 301 actions.

Public Hearing: A public hearing in connection with this investigation will be held at the United States International Trade Commission Building, 500 E Street SW., Washington, DC, beginning at 9:30 a.m. on December 16, 2010. Requests to appear at the hearing should be filed with the Secretary no later than 5:15 p.m., November 29, 2010, in accordance with the requirements in the "Submissions" section below. All pre-hearing briefs and statements should be filed not later than 5:15 p.m., November 29, 2010; and all post-hearing briefs and statements should be filed not later than 5:15 p.m., January 6, 2011. In the event that, as of the close of business on November 29, 2010, no witnesses are scheduled to appear at the hearing, the hearing will be canceled. Any person interested in attending the hearing as an observer or nonparticipant may call the Secretary to the Commission (202–205–2000) after November 29, 2010, for information concerning whether the hearing will be held.

Written Submissions: In lieu of or in addition to participating at the hearing, interested parties are invited to file written submissions concerning this investigation. All written submissions (other than pre- and post-hearing briefs and statements) should be addressed to the Secretary, and should be received not later than 5:15 p.m., February 7, 2011. All written submissions must conform with the provisions of section 201.8 of the Commission's *Rules of Practice and Procedure* (19 CFR 201.8). Section 201.8 requires that a signed original (or a copy so designated) and fourteen (14) copies of each document be filed. In the event that confidential treatment of a document is requested, at least four (4) additional copies must be filed, in which the confidential information must be deleted (see the following paragraph for further information regarding confidential business information). The Commission's rules authorize filing submissions with the Secretary by facsimile or electronic means only to the extent permitted by section 201.8 of the

rules (*see* Handbook for Electronic Filing Procedures, *http://www.usitc.gov/secretary/fed_reg_notices/rules/documents/handbook_on_electronic_filing.pdf*). Persons with questions regarding electronic filing should contact the Secretary (202–205–2000).

Any submissions that contain confidential business information must also conform with the requirements of section 201.6 of the *Commission's Rules of Practice and Procedure* (19 CFR 201.6). Section 201.6 of the rules requires that the cover of the document and the individual pages be clearly marked as to whether they are the "confidential" or "non-confidential" version, and that the confidential business information be clearly identified by means of brackets. All written submissions, except for confidential business information, will be made available for inspection by interested parties.

In its request letter, the USTR stated that his office intends to make the Commission's report available to the public in its entirety, and asked that the Commission not include any confidential business information or national security classified information in the report it sends to the USTR. Any confidential business information received by the Commission in this investigation and used in preparing this report will not be published in a manner that would reveal the operations of the firm supplying the information.

By order of the Commission.

Issued: October 14, 2010.

William R. Bishop,

Acting Secretary to the Commission.

[FR Doc. 2010–26235 Filed 10–18–10; 8:45 am]

BILLING CODE P

DEPARTMENT OF JUSTICE

Notice of Lodging of Consent Decree Under the Comprehensive Environmental Response, Compensation, and Liability Act and The Clean Water Act

Notice is hereby given that on October 12, 2010, two proposed Consent Decrees in *United States and State of Louisiana* v. *ConocoPhillips Company and Sasol North America Inc.,* Civil Action No. 2:10-cv-1556, were lodged with the United States District Court for the Western District of Louisiana.

In this action the United States, on behalf of the United States Environmental Protection Agency, the United States Department of the Interior, and the National Oceanic and Atmospheric Administration of the United States Department of Commerce, and the State of Louisiana, on behalf of the Louisiana Department of Wildlife and Fisheries ("LDWF") and the Louisiana Department of Environmental Quality ("LDEQ"), sought, pursuant to Sections 106 and 107(a) of the Comprehensive Environmental Response, Compensation and Liability Act ("CERCLA"), 42 U.S.C. 9606 and 9607(a), and pursuant to Section 311(f) of the Clean Water Act, 33 U.S.C. 1321(f), (1) Reimbursement of response costs incurred and to be incurred by the governments in connection with the Calcasieu Estuary Superfund Site ("Site"), (2) injunctive relief requiring performance of response actions by Defendants; and (3) recovery of damages for the injury to, destruction of, or loss of natural resources under the trusteeship of the federal and state trustees, as a result of releases and threatened release of hazardous substances into the environment at or from the Site, including the recovery of the costs of assessing such injury and damages and the future costs of overseeing and monitoring restoration actions. The Calcasieu Estuary Superfund Site is located in Louisiana and includes the aerial extent of contamination within the area of the Estuary encompassing Bayou Verdine, Bayou d' Inde, Coon Island Loop, Clooney Island Loop, Prien Lake, Lake Charles, and the Calcasieu River from the saltwater barrier to Moss Lake.

The United States and the State have negotiated two separate consent decrees to resolve the CERCLA and CWA claims against Settling Defendants, as well as the state law claims. The proposed Consent Decrees resolve the liability of ConocoPhillips Company and Sasol North America Inc. for response costs incurred and response actions taken in connection with the Site and for damages for injury to, loss of, or destruction of natural resources at the Site as alleged in the Complaint. Under the Consent Decree for Removal Action and Recovery of Response Costs, Settling Defendants have agreed to: (1) Reimburse the United States $4,553,547 of past response costs for the Site and 100% of future oversight costs related to the selected removal action for Bayou Verdine, and (2) perform a non-time critical removal action within Bayou Verdine and adjacent areas at the Site in accordance with the Action Memorandum for a Removal Action at the Calcasieu Estuary Superfund Site, Bayou Verdine Area of Concern, Lake Charles, Calcasieu Parish, Louisiana, executed by EPA on August 6, 2003. This Consent Decree includes a covenant not to sue by the United States and the State under Sections 106 and 107 of CERCLA, under Section 311(f) of the Clean Water Act, and under Section 7003 of the Resource Conservation and Recovery Act ("RCRA"), 42 U.S.C. 6973.

Under the Consent Decree for Natural Resource Damages, Settling Defendants have agreed to (1) reimburse the federal and state trustees nearly $1,200,000 of past natural resource damages assessment costs, (2) perform construction of a restoration project selected by the trustees in accordance with the Final Restoration Plan and Environmental Assessment for the Bayou Verdine Site, and (3) pay an additional sum of $750,000 toward further monitoring or corrective action after completion of construction of the restoration project. Under the terms of the Consent Decree and the assessment and restoration plan finalized by the Trustees, the Settling Defendants will construct the Sabine Unit 1999 Restoration Project to compensate for the natural resources losses attributable to Settling Defendants' releases of hazardous substances into the Calcasieu Estuary. The Project will create over 14 new acres of marsh, enhance the ecological functioning of approximately 247 acres of existing marsh, and increase the expected functional life span of these marshes. It is to be performed in the Calcasieu Estuary at a designated site within the Sabine National Wildlife Refuge. This Consent Decree includes a covenant not to sue by the United States and the State under Section 107 of CERCLA and under Section 311(f) of the Clean Water Act.

The two proposed Consent Decrees are to become effective only after both have been entered by the Court.

The Department of Justice will receive for a period of thirty (30) days from the date of this publication comments relating to the Consent Decree. Comments should be addressed to the Assistant Attorney General for the Environment and Natural Resources Division, U.S. Department of Justice, and either e-mailed to *pubcommentees.enrd@usdoj.gov* or mailed to P.O. Box 7611, NW., Washington, DC 20044–7611, and should refer to *United States and State of Louisiana* v. *ConocoPhillips Company and Sasol North America Inc.,* D.J. Ref. 90–11–2–1284 and 1284/1. Commenters may request an opportunity for a public meeting in the affected area, in accordance with Section 7003 (d) of RCRA, 42 U.S.C. 6973(d).

The Consent Decrees may be examined at the Office of the United States Attorney, Western District of Louisiana, 800 Lafayette Street, Suite

2200, Lafayette, Louisiana 70501. The Consent Decree for Removal Action and Recovery of Response Costs may also be examined at U.S. EPA Region 6, 1445 Ross Avenue, Suite 1200, Dallas, Texas, 75202. During the public comment period, the Consent Decrees may also be examined on the following Department of Justice Web site, *http://www.usdoj.gov/enrd/Consent_Decrees.html.* A copy of either Consent Decree may also be obtained by mail from the Consent Decree Library, P.O. Box 7611, U.S. Department of Justice, Washington, DC 20044–7611 or by faxing or e-mailing a request to Tonia Fleetwood (*tonia.fleetwood@usdoj.gov*), fax no. (202) 514–0097, phone confirmation number (202) 514–1547. In requesting a copy from the Consent Decree Library, please enclose a check in the amount of $51.25 for the Response Costs and Response Action Consent Decree and attachments (25 cents per page reproduction cost) and/or in the amount of $21.75 for the Natural Resource Damages Consent Decree and attachments (25 cents per page reproduction cost), payable to the U.S. Treasury or, if by email or fax, forward a check in the amount(s) to the Consent Decree Library at the stated address.

Maureen Katz,

Assistant Section Chief, Environmental Enforcement Section, Environment and Natural Resources Division.

[FR Doc. 2010–26238 Filed 10–18–10; 8:45 am]

BILLING CODE 4410–15–P

DEPARTMENT OF JUSTICE

Notice of Lodging of Consent Decree Under The Comprehensive Environmental Response, Compensation, and Liability Act ("CERCLA")

Notice is hereby given that on October 12, 2010 a proposed consent decree ("proposed Decree") in *United States* v. *Rutgers Organics Corporation,* Civil Action No. 04:10–cv–02113–JFM, was lodged with the United States District Court for the Middle District of Pennsylvania.

In this action under Section 107(a) of the Comprehensive Environmental Response, Compensation, and Liability Act, 42 U.S.C. 9607(a) ("CERCLA"), the United States sought to recover response costs incurred or to be incurred by the United States as a result of releases and threatened releases of hazardous substances from the chemical manufacturing facility operated by Rutgers Organics Company located at the Centre County Kepone Superfund Site in Centre County, Pennsylvania. The proposed Decree requires the defendant to pay $136,331.98 to the United States in reimbursement of past response costs, and obligates the defendant to perform the remedy that EPA selected for the surface soils at the Site. The proposed Decree provides the defendant with a covenant not to sue under Sections 106 and 107(a) of CERCLA, 42 U.S.C. 9606 and 9607(a).

The Department of Justice will receive for a period of thirty (30) days from the date of this publication comments relating to the proposed Decree. Comments should be addressed to the Assistant Attorney General, Environment and Natural Resources Division, and either emailed to *pubcomment-ees.enrd@usdoj.gov* or mailed to P.O. Box 7611, U.S. Department of Justice, Washington, DC 20044–7611, and should refer to *United States* v. *Rutgers Organics Corporation,* D.J. Ref. 90–11–3–1436/3.

The proposed Decree may be examined at the Office of the United States Attorney for the Middle District of Pennsylvania, William J. Nealon Federal Bldg. & Courthouse, 235 N. Washington Ave., Suite 311, Scranton, PA 18503, and at U.S. EPA Region 3, 1650 Arch Street, Philadelphia, PA 19103–2029. During the public comment period, the proposed Decree may also be examined on the following Department of Justice Web site: *http://www.usdoj.gov/enrd/Consent_Decrees.html.* A copy of the proposed Decree may also be obtained by mail from the Consent Decree Library, P.O. Box 7611, U.S. Department of Justice, Washington, DC 20044–7611 or by faxing or e-mailing a request to Tonia Fleetwood (*tonia.fleetwood@usdoj.gov*), fax no. (202) 514–0097, phone confirmation number (202) 514–1547. In requesting a copy from the Consent Decree Library, please enclose a check in the amount of $53.75 (25 cents per page reproduction cost) payable to the U.S. Treasury or, if by email or fax, forward a check in that amount to the Consent Decree Library at the stated address.

Maureen Katz,

Assistant Chief, Environmental Enforcement Section, Environment and Natural Resources Division.

[FR Doc. 2010–26255 Filed 10–18–10; 8:45 am]

BILLING CODE 4410–15–P

DEPARTMENT OF JUSTICE

Bureau of Alcohol, Tobacco, Firearms and Explosives

[OMB Number 1140–0015]

Agency Information Collection Activities: Proposed Collection; Comments Requested

ACTION: 60–Day Notice of Information Collection Under Review: Application for Tax Exempt Transfer and Registration of Firearm.

The Department of Justice (DOJ), Bureau of Alcohol, Tobacco, Firearms and Explosives (ATF), will be submitting the following information collection request to the Office of Management and Budget (OMB) for review and approval in accordance with the Paperwork Reduction Act of 1995. The proposed information collection is published to obtain comments from the public and affected agencies. Comments are encouraged and will be accepted for "sixty days" until December 20, 2010. This process is conducted in accordance with 5 CFR 1320.10.

If you have comments especially on the estimated public burden or associated response time, suggestions, or need a copy of the proposed information collection instrument with instructions or additional information, please contact Gary Schaible, National Firearms Act Branch, Room 5100, 650 Massachusetts Avenue, NW., Washington, DC 20226

Written comments and suggestions from the public and affected agencies concerning the proposed collection of information are encouraged. Your comments should address one or more of the following four points:

—Evaluate whether the proposed collection of information is necessary for the proper performance of the functions of the agency, including whether the information will have practical utility;

—Evaluate the accuracy of the agency's estimate of the burden of the proposed collection of information, including the validity of the methodology and assumptions used;

—Enhance the quality, utility, and clarity of the information to be collected; and

—Minimize the burden of the collection of information on those who are to respond, including through the use of appropriate automated, electronic, mechanical, or other technological collection techniques or other forms of information technology, e.g., permitting electronic submission of responses.

Overview of This Information Collection

(1) *Type of Information Collection:* Extension of a currently approved collection.

(2) *Title of the Form/Collection:* Application For Tax Exempt Transfer and Registration of Firearm.

(3) *Agency form number, if any, and the applicable component of the Department of Justice sponsoring the collection: Form Number:* ATF F 5 (5320.5). Bureau of Alcohol, Tobacco, Firearms and Explosives.

(4) *Affected public who will be asked or required to respond, as well as a brief abstract: Primary:* Business or other for-profit. *Other:* Individual or households and State, Local, or Tribal Government. ATF F 5 (5320.5) is used to apply for permission to transfer a National Firearms Act (NFA) firearm exempt from transfer tax bases on statutory exemptions. The information on the form is used by NFA Branch personnel to determine the legality of the application under Federal, State and local law.

(5) *An estimate of the total number of respondents and the amount of time estimated for an average respondent to respond:* It is estimated that 7,888 respondents will complete a 4-hour form.

(6) *An estimate of the total public burden (in hours) associated with the collection:* There are an estimated 379,896 annual total burden hours associated with this collection.

If additional information is required contact: Lynn Murray, Department Clearance Officer, United States Department of Justice, Justice Management Division, Policy and Planning Staff, Two Constitution Square, Room 2E–502, Washington, DC 20530.

Dated: October 14, 2010.

Lynn Murray,

Department Clearance Officer, PRA, U.S. Department of Justice.

[FR Doc. 2010–26306 Filed 10–18–10; 8:45 am]

BILLING CODE 4410–FY–P

DEPARTMENT OF JUSTICE

Bureau of Alcohol, Tobacco, Firearms and Explosives

[OMB Number 1140–0090]

Agency Information Collection Activities: Proposed Collection; Comments Requested

ACTION: 60-Day Notice of Information Collection Under Review: ATF F 5630.5R, NFA Special Tax Renewal Registration and Return; ATF F 5630.5RC, NFA Special Tax Location Registration Listing; ATF F 5630.7, NFA Special Tax Registration and Return National Firearms Act.

The Department of Justice (DOJ), Bureau of Alcohol, Tobacco, Firearms and Explosives (ATF), will be submitting the following information collection request to the Office of Management and Budget (OMB) for review and approval in accordance with the Paperwork Reduction Act of 1995. The proposed information collection is published to obtain comments from the public and affected agencies. Comments are encouraged and will be accepted for "sixty days" until December 20, 2010. This process is conducted in accordance with 5 CFR 1320.10.

If you have comments especially on the estimated public burden or associated response time, suggestions, or need a copy of the proposed information collection instrument with instructions or additional information, please contact Gary Schaible, National Firearms Act Branch, 244 Needy Road, Martinsburg, WV 25405.

Written comments and suggestions from the public and affected agencies concerning the proposed collection of information are encouraged. Your comments should address one or more of the following four points:

—Evaluate whether the proposed collection of information is necessary for the proper performance of the functions of the agency, including whether the information will have practical utility;

—Evaluate the accuracy of the agency's estimate of the burden of the proposed collection of information, including the validity of the methodology and assumptions used;

—Enhance the quality, utility, and clarity of the information to be collected; and

—Minimize the burden of the collection of information on those who are to respond, including through the use of appropriate automated, electronic, mechanical, or other technological collection techniques or other forms of information technology, *e.g.,* permitting electronic submission of responses.

Overview of This Information Collection

(1) *Type of Information Collection:* Extension of a currently approved collection.

(2) *Title of the Form/Collection:* ATF F 5630.5R, NFA Special Tax Renewal Registration and Return, ATF F 5630.5RC, NFA Special Tax Location Registration Listing, ATF F 5630.7, NFA Special Tax Registration and Return National Firearms Act.

(2) *Agency form number, if any, and the applicable component of the Department of Justice sponsoring the collection: Form Number:* ATF F 5630.5R, ATF F 5630.5RC, ATF F 5630.7. Bureau of Alcohol, Tobacco, Firearms and Explosives.

(4) *Affected public who will be asked or required to respond, as well as a brief abstract: Primary:* Business or other for-profit. *Other:* None. ATF F 5630.7, NFA Special Tax Registration and Return National Firearms Act is completed and returned by businesses that are subject to Special Occupation Taxes under the National Firearms Act for either initial tax payment or business information changes. This form serves as both a return and a business registration. ATF F 5630.5R, NFA Special Tax Renewal Registration and Return and ATF F 5630.5RC, NFA Special Tax Location Registration Listing are preprinted forms sent to taxpayers who Special Occupational Taxes under the National Firearms Act. Taxpayers validate/correct the information and send the forms back with payment for the applicable tax year.

(5) *An estimate of the total number of respondents and the amount of time estimated for an average respondent to respond:* It is estimated that 2,800 taxpayers will complete forms ATF F 5630.5R and ATF F 5630.5RC in approximately 20 minutes (10 minutes for each form). It is also estimated that 200 new taxpayers will complete ATF F 5630.7 in its entirety in approximately 15 minutes. The total number of respondents for this information collection is 3,000.

(6) *An estimate of the total public burden (in hours) associated with the collection:* The total burden for ATF F 5630.5R and ATF F 5630.5RC is 933 hours. The total burden for ATF F 5630.7 is 50 hours. The estimated total public burden associated with this information collection is 983 hours.

If additional information is required contact: Lynn Murray, Department Clearance Officer, Policy and Planning Staff, Justice Management Division, Department of Justice, Two Constitution Square, Room 2E–502, 145 N Street, NE., Washington, DC 20530.

Dated: October 14, 2010.

Lynn Murray,

Department Clearance Officer, PRA, U.S. Department of Justice.

[FR Doc. 2010–26308 Filed 10–18–10; 8:45 am]

BILLING CODE 4410–FY–P

DEPARTMENT OF JUSTICE

Bureau of Alcohol, Tobacco, Firearms and Explosives

[OMB Number 1140–0013]

Agency Information Collection Activities: Proposed Collection; Comments Requested

ACTION: 60-Day Notice of Information Collection Under Review: Application for Tax-Exempt Transfer of Firearm and Registration to Special (Occupational) Taxpayer.

The Department of Justice (DOJ), Bureau of Alcohol, Tobacco, Firearms and Explosives (ATF), will be submitting the following information collection request to the Office of Management and Budget (OMB) for review and approval in accordance with the Paperwork Reduction Act of 1995. The proposed information collection is published to obtain comments from the public and affected agencies. Comments are encouraged and will be accepted for "sixty days" until December 20, 2010. This process is conducted in accordance with 5 CFR 1320.10.

If you have comments especially on the estimated public burden or associated response time, suggestions, or need a copy of the proposed information collection instrument with instructions or additional information, please contact Gary Schaible, National Firearms Act Branch, 244 Needy Road, Martinsburg, WV 25405.

Written comments and suggestions from the public and affected agencies concerning the proposed collection of information are encouraged. Your comments should address one or more of the following four points:

—Evaluate whether the proposed collection of information is necessary for the proper performance of the functions of the agency, including whether the information will have practical utility;

—Evaluate the accuracy of the agency's estimate of the burden of the proposed collection of information, including the validity of the methodology and assumptions used;

—Enhance the quality, utility, and clarity of the information to be collected; and

—Minimize the burden of the collection of information on those who are to respond, including through the use of appropriate automated, electronic, mechanical, or other technological collection techniques or other forms of information technology, e.g., permitting electronic submission of responses.

Overview of This Information Collection

(1) *Type of Information Collection:* Extension of a currently approved collection.

(2) *Title of the Form/Collection:* Application for Tax-Exempt Transfer of Firearm and Registration to Special (Occupational) Taxpayer.

(3) *Agency form number, if any, and the applicable component of the Department of Justice sponsoring the collection: Form Number:* ATF F 3 (5320.3). Bureau of Alcohol, Tobacco, Firearms and Explosives.

(4) *Affected public who will be asked or required to respond, as well as a brief abstract: Primary:* Business or other for-profit. *Other:* None. The form is submitted and approved by ATF prior to the transfer of a National Firearms Act weapon from one Special Occupational Tax paying Federal firearms licensee to another special taxpaying licensee. The form is required whenever such a transfer is to be made.

(5) *An estimate of the total number of respondents and the amount of time estimated for an average respondent to respond:* It is estimated that 2,521 respondents will complete a 30-minute form.

(6) *An estimate of the total public burden (in hours) associated with the collection:* There are an estimated 11,144 annual total burden hours associated with this collection.

If additional information is required contact: Lynn Murray, Department Clearance Officer, United States Department of Justice, Justice Management Division, Policy and Planning Staff, Two Constitution Square, Room 2E–502, 145 N Street, NE., Washington, DC 20530.

Dated: October 14, 2010.

Lynn Murray,

Department Clearance Officer, PRA, U.S. Department of Justice.

[FR Doc. 2010–26307 Filed 10–18–10; 8:45 am]

BILLING CODE 4410–FY–P

DEPARTMENT OF JUSTICE

Bureau of Alcohol, Tobacco, Firearms and Explosives

[OMB Number 1140–0019]

Agency Information Collection Activities: Proposed Collection; Comments Requested

ACTION: 60–Day Notice of Information Collection Under Review: Federal Firearms License (FFL) RENEWAL Application.

The Department of Justice (DOJ), Bureau of Alcohol, Tobacco, Firearms and Explosives (ATF), will be submitting the following information collection request to the Office of Management and Budget (OMB) for review and approval in accordance with the Paperwork Reduction Act of 1995. The proposed information collection is published to obtain comments from the public and affected agencies. Comments are encouraged and will be accepted for "sixty days" until December 20, 2010. This process is conducted in accordance with 5 CFR 1320.10.

If you have comments especially on the estimated public burden or associated response time, suggestions, or need a copy of the proposed information collection instrument with instructions or additional information, please contact Patricia Power, Chief, Federal Firearms Licensing Center, 244 Needy Road, Martinsburg, WV 20226.

Written comments and suggestions from the public and affected agencies concerning the proposed collection of information are encouraged. Your comments should address one or more of the following four points:

—Evaluate whether the proposed collection of information is necessary for the proper performance of the functions of the agency, including whether the information will have practical utility;

—Evaluate the accuracy of the agency's estimate of the burden of the proposed collection of information, including the validity of the methodology and assumptions used;

—Enhance the quality, utility, and clarity of the information to be collected; and

—Minimize the burden of the collection of information on those who are to respond, including through the use of appropriate automated, electronic, mechanical, or other technological collection techniques or other forms of information technology, e.g., permitting electronic submission of responses.

Overview of This Information collection

(1) *Type of Information Collection:* Extension of a currently approved collection.

(2) *Title of the Form/Collection:* Federal Firearms License (FFL) RENEWAL Application.

(3) *Agency form number, if any, and the applicable component of the Department of Justice sponsoring the collection: Form Number:* ATF F 8 (5310.11). Bureau of Alcohol, Tobacco, Firearms and Explosives.

(4) *Affected public who will be asked or required to respond, as well as a brief abstract: Primary:* Business or other for-profit. *Other:* Individual or households. The form is filed by the licensee desiring to renew a Federal firearms license. It is used to identify the applicant, locate the business/collection premises, identify the type of business/collection activity, and determine the eligibility of the applicant.

(5) *An estimate of the total number of respondents and the amount of time estimated for an average respondent to respond:* It is estimated that 35,000 respondents will complete a 25-minute form.

(6) *An estimate of the total public burden (in hours) associated with the collection:* There are an estimated 14,700 annual total burden hours associated with this collection.

If additional information is required, contact: Lynn Murray, Department Clearance Officer, Policy and Planning Staff, Justice Management Division, Department of Justice, Two Constitution Square, Room 2E–502, 145 N Street, NE., Washington, DC 20530.

October 14, 2010.

Lynn Murray,

Department Clearance Officer, PRA, U.S. Department of Justice.

[FR Doc. 2010–26313 Filed 10–18–10; 8:45 am]

BILLING CODE 4410–FY–P

DEPARTMENT OF JUSTICE

Bureau of Alcohol, Tobacco, Firearms and Explosives

[OMB Number 1140–0027]

Agency Information Collection Activities: Proposed Collection; Comments Requested

ACTION: 60-Day Notice of Information Collection Under Review: User—Limited Permit (Explosives).

The Department of Justice (DOJ), Bureau of Alcohol, Tobacco, Firearms and Explosives (ATF), will be submitting the following information collection request to the Office of Management and Budget (OMB) for review and approval in accordance with the Paperwork Reduction Act of 1995. The proposed information collection is published to obtain comments from the public and affected agencies. Comments are encouraged and will be accepted for "sixty days" until December 20, 2010. This process is conducted in accordance with 5 CFR 1320.10.

If you have comments especially on the estimated public burden or associated response time, suggestions, or need a copy of the proposed information collection instrument with instructions or additional information, please contact Christopher Reeves, Chief, Federal Explosives Licensing Center, 244 Needy Road, Martinsburg, WV 25405.

Written comments and suggestions from the public and affected agencies concerning the proposed collection of information are encouraged. Your comments should address one or more of the following four points:

—Evaluate whether the proposed collection of information is necessary for the proper performance of the functions of the agency, including whether the information will have practical utility;

—Evaluate the accuracy of the agency's estimate of the burden of the proposed collection of information, including the validity of the methodology and assumptions used;

—Enhance the quality, utility, and clarity of the information to be collected; and

—Minimize the burden of the collection of information on those who are to respond, including through the use of appropriate automated, electronic, mechanical, or other technological collection techniques or other forms of information technology, *e.g.,* permitting electronic submission of responses.

Overview of This Information Collection

(1) *Type of Information Collection:* Extension of a currently approved collection.

(2) *Title of the Form/Collection:* User—Limited Permit (Explosives).

(3) *Agency form number, if any, and the applicable component of the Department of Justice sponsoring the collection: Form Number:* ATF F 5400.6. Bureau of Alcohol, Tobacco, Firearms and Explosives.

(4) *Affected public who will be asked or required to respond, as well as a brief abstract: Primary:* Business or other for-profit. *Other:* Individuals or households. The User-Limited Permit is useful to the person making a one-time purchase of explosives from out-of-state. This permit is not transferable and valid only for a single transaction involving the type and quantity of explosive materials specified on the permit. It is nonrenewable. The explosives distributor makes entries on the form and returns the form to the permittee to prevent reuse of the permit.

(5) *An estimate of the total number of respondents and the amount of time estimated* for an average respondent to respond: It is estimated that 1,092 respondents will complete and retain the form in 12 minutes.

(6) *An estimate of the total public burden (in hours) associated with the collection:* There are an estimated 218 annual total burden hours associated with this collection.

If additional information is required contact: Lynn Murray, Department Clearance Officer, Policy and Planning Staff, Justice Management Division, Department of Justice, Two Constitution Square, Room 2E–502, 145 N Street, NE., Washington, DC 20530.

October 14, 2010.

Lynn Murray,

Department Clearance Officer, PRA, U.S. Department of Justice.

[FR Doc. 2010–26309 Filed 10–18–10; 8:45 am]

BILLING CODE 4410–FY–P

NATIONAL AERONAUTICS AND SPACE ADMINISTRATION

[Notice: (10–131)]

Notice of Information Collection

AGENCY: National Aeronautics and Space Administration (NASA).

ACTION: Notice of information collection.

SUMMARY: The National Aeronautics and Space Administration, as part of its continuing effort to reduce paperwork and respondent burden, invites the general public and other Federal agencies to take this opportunity to comment on proposed and/or continuing information collections, as required by the Paperwork Reduction Act of 1995 (Pub. L. 104–13, 44 U.S.C. 3506(c)(2)(A)).

DATES: All comments should be submitted within 30 calendar days from the date of this publication.

ADDRESSES: All comments should be addressed to Lori Parker, National Aeronautics and Space Administration, Washington, DC 20546–0001.

FOR FURTHER INFORMATION CONTACT: Requests for additional information or copies of the information collection instrument(s) and instructions should be directed to Lori Parker, NASA PRA Officer, NASA Headquarters, 300 E Street, SW., JF0000, Washington, DC 20546, (202) 358–1351, *Lori.parker@nasa.gov.*

SUPPLEMENTARY INFORMATION:

I. Abstract

This information collection is an application form to be considered for a summer internship. Students are required to submit an application package consisting of an application

form, a personal essay describing career goals, a parent/guardian permission form for parents to sign approving the child's participation, and a teacher recommendation.

II. Method of Collection

NASA will utilize a Web-base application form with instructions and other application materials also on-line. However, once the application form and other application materials are down loaded and filled out, the package is mailed in to NASA.

III. Data

Title: INSPIRE (Interdisciplinary National Science Program Incorporating Research and Education Experience) Application.

OMB Number: 2700–0133.

Type of review: New Collection.

Affected Public: Individuals or households.

Estimated Number of Respondents: 2000.

Estimated Time per Response: 2 hours.

Estimated Total Annual Burden Hours: 4000.

Estimated Total Annual Cost: $0.

IV. Request for Comments

Comments are invited on: (1) Whether the proposed collection of information is necessary for the proper performance of the functions of NASA, including whether the information collected has practical utility; (2) the accuracy of NASA's estimate of the burden (including hours and cost) of the proposed collection of information; (3) ways to enhance the quality, utility, and clarity of the information to be collected; and (4) ways to minimize the burden of the collection of information on respondents, including automated collection techniques or the use of other forms of information technology.

Comments submitted in response to this notice will be summarized and included in the request for OMB approval of this information collection. They will also become a matter of public record.

Lori Parker,

PRA Clearance Officer.

[FR Doc. 2010–26291 Filed 10–18–10; 8:45 am]

BILLING CODE P

NATIONAL AERONAUTICS AND SPACE ADMINISTRATION

[Notice: (10–128)]

Notice of Information Collection

AGENCY: National Aeronautics and Space Administration (NASA).

ACTION: Notice of information collection.

SUMMARY: The National Aeronautics and Space Administration, as part of its continuing effort to reduce paperwork and respondent burden, invites the general public and other Federal agencies to take this opportunity to comment on proposed and/or continuing information collections, as required by the Paperwork Reduction Act of 1995 (Pub. L. 104–13, 44 U.S.C. 3506(c)(2)(A)).

DATES: All comments should be submitted within 60 calendar days from the date of this publication.

ADDRESSES: All comments should be addressed to Lori Parker, National Aeronautics and Space Administration, Washington, DC 20546–0001.

FOR FURTHER INFORMATION CONTACT: Requests for additional information or copies of the information collection instrument(s) and instructions should be directed to Lori Parker, NASA PRA Officer, NASA Headquarters, 300 E Street, SW., JF0000, Washington, DC 20546, (202) 358–1351, *Lori.Parker@nasa.gov.*

SUPPLEMENTARY INFORMATION:

I. Abstract

This information collection has to do with recordkeeping and reporting required to ensure proper accounting of Federal funds and property provided under NASA cooperative agreements with commercial firms.

II. Method of Collection

Electronic funds transfer is used for payment under Treasury guidance. In addition, NASA encourages the use of computer technology and is participating in Federal efforts to extend the use of information technology to more Government processes via the Internet. Specifically, progress has been made in the area of property reporting, most of it being done electronically.

III. Data

Title: Cooperative Agreements with Commercial Firms.

OMB Number: 2700–0092.

Type of review: Revision of Currently Approved Collection.

Affected Public: Business or other for-profit.

Estimated Number of Respondents: 288.

Estimated Total Annual Burden Hours: 1496.

Estimated Total Annual Cost to Government: $0.

IV. Request for Comments

Comments are invited on: (1) Whether the proposed collection of information is necessary for the proper performance of the functions of NASA, including whether the information collected has practical utility; (2) the accuracy of NASA's estimate of the burden (including hours and cost) of the proposed collection of information; (3) ways to enhance the quality, utility, and clarity of the information to be collected; and (4) ways to minimize the burden of the collection of information on respondents, including automated collection techniques or the use of other forms of information technology.

Comments submitted in response to this notice will be summarized and included in the request for OMB approval of this information collection. They will also become a matter of public record.

Lori Parker,

NASA PRA Clearance Officer.

[FR Doc. 2010–26201 Filed 10–18–10; 8:45 am]

BILLING CODE 7510–13–P

NATIONAL SCIENCE FOUNDATION

Notice of Intent To Seek Approval To Renew an Information Collection

AGENCY: National Science Foundation.

ACTION: Notice and request for comments.

SUMMARY: The National Science Foundation (NSF) is announcing plans to request clearance of this collection. In accordance with the requirement of Section 3506(c)(2)(A) of the Paperwork Reduction Act of 1995 (Pub. L. 104–13), we are providing opportunity for public comment on this action. After obtaining and considering public comment, NSF will prepare the submission requesting that OMB approve clearance of this collection for no longer than 3 years.

DATES: Written comments on this notice must be received by December 20, 2010 to be assured of consideration. Comments received after that date will be considered to the extent practicable.

For Additional Information or Comments: Contact Suzanne H. Plimpton, Reports Clearance Officer, National Science Foundation, 4201 Wilson Boulevard, Suite 295, Arlington, Virginia 22230; telephone (703) 292–7556; or send e-mail to *splimpto@nsf.gov.* You also may obtain a copy of the data collection instrument and instructions from Ms. Plimpton.

SUPPLEMENTARY INFORMATION:

Title of Collection: Medical Clearance Process for Deployment to Antarctica.

OMB Number: 3145–0177.

Expiration Date of Approval: January 31, 2011.

Type of Request: Intent to seek approval to renew an information collection for three years.

Abstract

A. *Proposed Project:* All individuals who anticipate deploying to Antarctica under the auspices of the United States Antarctic Program and to certain regions of the Arctic are required to take and pass a rigorous physical examination prior to deploying. The physical examination includes a medical history, medical examination, a dental examination and a psychological examination for those persons planning to winter over in Antarctica. The requirement for this determination of physical status is found in 42 U.S.C. 1870 (Authority) and 62 FR 31522, June 10, 1997 (Source), unless otherwise noted. This part sets forth the procedures for medical screening to determine whether candidates for participation in the United States Antarctic [[Page 216]] Program (USAP) are physically qualified and psychologically adapted for assignment or travel to Antarctica. Medical screening examinations are necessary to determine the presence of any physical or psychological conditions that would threaten the health or safety of the candidate or other participants or that could not be effectively treated by the limited medical care capabilities in Antarctica or in Greenland.

(b) Presidential Memorandum No. 6646 (February 5, 1982) (available from the National Science Foundation, Office of Polar Programs, Room 755, 4201 Wilson Blvd., Arlington, VA 22230) sets forth the National Science Foundation's overall management responsibilities for the entire United States national program in Antarctica. Section 107.(a) of Public Law 98–373 (July 31, 1984; amended as Public Law 101–609—November 16, 1990) (available from the National Science Foundation, Office of Polar Programs, Room 755, 4201 Wilson Blvd., Arlington, VA 22230) designates the National Science Foundation as the lead agency responsible for implementing Arctic research policy, and the Director of the National Science Foundation shall insure that the requirements of section 108 are fulfilled.

B. *Use of the Information:*

1. *Form NSF–1420,* National Science Foundation—Polar Physical Examination (Antarctica/Arctic/Official Visitors) Medical History, will be used by the individual to record the individual's family and personal medical histories. It is a nine-page form that includes the individual's and the individual's emergency point-of-contact's name, address, and telephone numbers. It contains the individual's email address, employment affiliation and dates and locations of current and previous polar deployments. It also includes a signed certification of the accuracy of the information and understandings of refusal to provide the information or providing false information. The agency's contractor's reviewing physician and medical staff complete the sections of the form that indicated when the documents were received and whether or not the person qualified for polar deployment, in which season and which location qualified to deploy and where disqualified, the reasons.

2. *Form NSF–1421,* Polar Physical Examination—Antarctica/Arctic, will be used by the individual's physician to document specific medical examination results and the overall status of the individual's health. It is a two-page form which also provides for the signatures of both the patient and the examining physician, as well as contact information about the examining physician. Finally, it contains the name, address and telephone number of the agency's contractor that collects and retains the information.

3. *Form NSF–1422,* National Science Foundation Polar Physical Examination (Antarctica/Arctic/Official Visitors) Medical History Interval Screening, has been discontinued. It was previously used to document changes in family and personal history for those healthy individuals who are under age 40 and had no adverse personal medical information to report for the preceding year.

4. *Form NSF–1423,* Polar Dental Examination—Antarctica/Arctic/Official Visitors, will be used by the examining dentist to document the status of the individual's teeth and gums and to document when the individual was examined. It will also be used by the contractor's reviewing dentist to document whether or not the individual is dentally cleared to deploy to the Polar regions.

5. *Medical Waivers:* Any individual who is determined to be not physically qualified for polar deployment may request an administrative waiver of the medical screening criteria. This information includes signing a Request for Waiver that is notarized or otherwise legally acceptable in accordance with penalty of perjury statutes, and obtaining an Employer Statement of Support. Individuals on a case-by-case basis may also be asked to submit additional medical documentation and a letter from the individual's physician(s) regarding the individual's medical condition and his or her suitability for Antarctic deployment.

6. *Other information requested:* In addition to the numbered forms and other information mentioned above, the USAP medical screening package includes the following:

- The Medical Risks for NSF-Sponsored Personnel Traveling to Antarctica or Greenland
- the NSF Privacy Notice
- the NSF Medical Screening for Blood-Borne Pathogens/Consent for HIV Testing
- the NSF Authorization for Treatment of Field-Team Member/Participant Under the Age of 18 Years. This form will only be sent to the individuals who are under 18 years of age.
- the Dear Doctor and Dear Dentist letters, which provide specific laboratory and x-ray requirements, as well as other instructions.
- the influenza vaccination requirement letter.

7. *There are two other, non-medical forms included in the mailing:*

- the Personal Information Form—NSF Form Number 1424 includes a Privacy Act Notice. This form is used to collect information on current address and contact numbers, date and place of birth, nationality, citizenship, emergency point of contact information, travel dates, clothing sizes so that we may properly outfit those individuals who deploy, work-site information and prior deployment history.
- the Participant Notifications—Important Notice for Participants in the United States Antarctic or Arctic Program. These forms provide information on the laws, of the nations through which program participants must transit en route to Antarctica or Greenland, regarding the transport, possession and use of illegal substances and the possibility of criminal prosecution if caught, tried and convicted.

Estimate of Burden: Public reporting burden for this collection of information varies according to the overall health of the individual, the amount of research required to complete the forms, the time it takes to make an appointment, take the examination and schedule and complete any follow-up medical, dental or psychological requirements, the method used to complete the forms and the completeness of the forms submitted. The estimated time is up to six weeks from the time the individual receives the forms until he or she is notified by the contractor of their final clearance status. An additional period of up to eight weeks may be required for the individual who was disqualified to

be notified of the disqualification, to request and receive the waiver packet, to obtain employer support and complete the waiver request, to do any follow-up testing, to return the waiver request to the contractor plus any follow-up information, for the contractor to get the completed packet to the National Science Foundation, and for NSF to make and promulgate a decision.

Respondents: All individuals deploying to the Antarctic under the auspices of the United States Antarctic Program and certain Arctic areas must complete these forms. There are approximately 3,000 submissions per year, with a small percentage (c.3%) under the age of 40 who provide annual submissions but with less information.

Estimated Number of Responses per Form: Responses range from 2 to approximately 238 responses.

Estimated Total Annual Burden on Respondents: 28,728 hours; fewer if the individual has previously deployed and saved his or her prior year's data for future use.

Frequency of Responses: Physical qualifications are valid for 12 months. Individuals must complete the forms annually or not earlier than six months prior to their anticipated deployment date, if they are infrequent travelers. Depending on individual medical status some persons may require additional laboratory results to be current within two to six-weeks of anticipated deployment.

Comments: Comments are invited on (a) whether the proposed collection of information is necessary for the proper performance of the functions of the Agency, including whether the information shall have practical utility; (b) the accuracy of the Agency's estimate of the burden of the proposed collection of information; (c) ways to enhance the quality, utility, and clarity of the information on respondents, including through the use of automated collection techniques or other forms of information technology; and (d) ways to minimize the burden of the collection of information on those who are to respond, including through the use of appropriate automated, electronic, mechanical, or other technological collection techniques, or other forms of information technology.

Dated: October 14, 2010.

Suzanne H. Plimpton,

Reports Clearance Officer, National Science Foundation.

[FR Doc. 2010–26249 Filed 10–18–10; 8:45 am]

BILLING CODE 7555–01–P

NUCLEAR REGULATORY COMMISSION

[NRC–2010–0327]

Biweekly Notice; Applications and Amendments to Facility Operating Licenses Involving No Significant Hazards Considerations

I. Background

Pursuant to section 189a.(2) of the Atomic Energy Act of 1954, as amended (the Act), the U.S. Nuclear Regulatory Commission (the Commission or NRC) is publishing this regular biweekly notice. The Act requires the Commission publish notice of any amendments issued, or proposed to be issued and grants the Commission the authority to issue and make immediately effective any amendment to an operating license upon a determination by the Commission that such amendment involves no significant hazards consideration, notwithstanding the pendency before the Commission of a request for a hearing from any person.

This biweekly notice includes all notices of amendments issued, or proposed to be issued from September 23, 2010 to October 6, 2010. The last biweekly notice was published on October 5, 2010, (75 FR 61521).

Notice of Consideration of Issuance of Amendments to Facility Operating Licenses, Proposed No Significant Hazards Consideration Determination, and Opportunity for a Hearing

The Commission has made a proposed determination that the following amendment requests involve no significant hazards consideration. Under the Commission's regulations in Title 10 of the Code of Federal Regulations (10 CFR), 50.92, this means that operation of the facility in accordance with the proposed amendment would not (1) involve a significant increase in the probability or consequences of an accident previously evaluated; or (2) create the possibility of a new or different kind of accident from any accident previously evaluated; or (3) involve a significant reduction in a margin of safety. The basis for this proposed determination for each amendment request is shown below.

The Commission is seeking public comments on this proposed determination. Any comments received within 30 days after the date of publication of this notice will be considered in making any final determination.

Normally, the Commission will not issue the amendment until the expiration of 60 days after the date of publication of this notice. The Commission may issue the license amendment before expiration of the 60-day period provided that its final determination is that the amendment involves no significant hazards consideration. In addition, the Commission may issue the amendment prior to the expiration of the 30-day comment period should circumstances change during the 30-day comment period such that failure to act in a timely way would result, for example in derating or shutdown of the facility. Should the Commission take action prior to the expiration of either the comment period or the notice period, it will publish in the **Federal Register** a notice of issuance. Should the Commission make a final No Significant Hazards Consideration Determination, any hearing will take place after issuance. The Commission expects that the need to take this action will occur very infrequently.

Written comments may be submitted by mail to the Chief, Rules, Announcements, and Directives Branch (RADB), TWB–05–B01M, Division of Administrative Services, Office of Administration, U.S. Nuclear Regulatory Commission, Washington, DC 20555–0001, and should cite the publication date and page number of this **Federal Register** notice. Written comments may also be faxed to the RADB at 301–492–3446. Documents may be examined, and/or copied for a fee, at the NRC's Public Document Room (PDR), located at One White Flint North, Public File Area O1F21, 11555 Rockville Pike (first floor), Rockville, Maryland.

Within 60 days after the date of publication of this notice, any person(s) whose interest may be affected by this action may file a request for a hearing and a petition to intervene with respect to issuance of the amendment to the subject facility operating license. Requests for a hearing and a petition for leave to intervene shall be filed in accordance with the Commission's "Rules of Practice for Domestic Licensing Proceedings" in 10 CFR Part 2. Interested person(s) should consult a current copy of 10 CFR 2.309, which is available at the Commission's PDR, located at One White Flint North, Public File Area O1F21, 11555 Rockville Pike (first floor), Rockville, Maryland. Publicly available records will be accessible from the Agencywide Documents Access and Management System's (ADAMS) Public Electronic Reading Room on the Internet at the NRC Web site, *http://www.nrc.gov/reading-rm/doc-collections/cfr/*. If a request for a hearing or petition for leave to intervene is filed by the above

date, the Commission or a presiding officer designated by the Commission or by the Chief Administrative Judge of the Atomic Safety and Licensing Board Panel, will rule on the request and/or petition; and the Secretary or the Chief Administrative Judge of the Atomic Safety and Licensing Board will issue a notice of a hearing or an appropriate order.

As required by 10 CFR 2.309, a petition for leave to intervene shall set forth with particularity the interest of the petitioner in the proceeding, and how that interest may be affected by the results of the proceeding. The petition should specifically explain the reasons why intervention should be permitted with particular reference to the following general requirements: (1) The name, address, and telephone number of the requestor or petitioner; (2) the nature of the requestor's/petitioner's right under the Act to be made a party to the proceeding; (3) the nature and extent of the requestor's/petitioner's property, financial, or other interest in the proceeding; and (4) the possible effect of any decision or order which may be entered in the proceeding on the requestor's/petitioner's interest. The petition must also identify the specific contentions which the requestor/petitioner seeks to have litigated at the proceeding.

Each contention must consist of a specific statement of the issue of law or fact to be raised or controverted. In addition, the requestor/petitioner shall provide a brief explanation of the bases for the contention and a concise statement of the alleged facts or expert opinion which support the contention and on which the requestor/petitioner intends to rely in proving the contention at the hearing. The requestor/petitioner must also provide references to those specific sources and documents of which the petitioner is aware and on which the requestor/petitioner intends to rely to establish those facts or expert opinion. The petition must include sufficient information to show that a genuine dispute exists with the applicant on a material issue of law or fact. Contentions shall be limited to matters within the scope of the amendment under consideration. The contention must be one which, if proven, would entitle the requestor/petitioner to relief. A requestor/petitioner who fails to satisfy these requirements with respect to at least one contention will not be permitted to participate as a party.

Those permitted to intervene become parties to the proceeding, subject to any limitations in the order granting leave to intervene, and have the opportunity to participate fully in the conduct of the hearing.

If a hearing is requested, the Commission will make a final determination on the issue of no significant hazards consideration. The final determination will serve to decide when the hearing is held. If the final determination is that the amendment request involves no significant hazards consideration, the Commission may issue the amendment and make it immediately effective, notwithstanding the request for a hearing. Any hearing held would take place after issuance of the amendment. If the final determination is that the amendment request involves a significant hazards consideration, any hearing held would take place before the issuance of any amendment.

All documents filed in NRC adjudicatory proceedings, including a request for hearing, a petition for leave to intervene, any motion or other document filed in the proceeding prior to the submission of a request for hearing or petition to intervene, and documents filed by interested governmental entities participating under 10 CFR 2.315(c), must be filed in accordance with the NRC E-Filing rule (72 FR 49139, August 28, 2007). The E-Filing process requires participants to submit and serve all adjudicatory documents over the internet, or in some cases to mail copies on electronic storage media. Participants may not submit paper copies of their filings unless they seek an exemption in accordance with the procedures described below.

To comply with the procedural requirements of E-Filing, at least ten (10) days prior to the filing deadline, the participant should contact the Office of the Secretary by e-mail at *hearing.docket@nrc.gov,* or by telephone at (301) 415–1677, to request (1) a digital ID certificate, which allows the participant (or its counsel or representative) to digitally sign documents and access the E-Submittal server for any proceeding in which it is participating; and (2) advise the Secretary that the participant will be submitting a request or petition for hearing (even in instances in which the participant, or its counsel or representative, already holds an NRC-issued digital ID certificate). Based upon this information, the Secretary will establish an electronic docket for the hearing in this proceeding if the Secretary has not already established an electronic docket.

Information about applying for a digital ID certificate is available on NRC's public Web site at *http://www.nrc.gov/site-help/e-submittals/apply-certificates.html.* System requirements for accessing the E-Submittal server are detailed in NRC's "Guidance for Electronic Submission," which is available on the agency's public Web site at *http://www.nrc.gov/site-help/e-submittals.html.* Participants may attempt to use other software not listed on the Web site, but should note that the NRC's E-Filing system does not support unlisted software, and the NRC Meta System Help Desk will not be able to offer assistance in using unlisted software.

If a participant is electronically submitting a document to the NRC in accordance with the E-Filing rule, the participant must file the document using the NRC's online, Web-based submission form. In order to serve documents through EIE, users will be required to install a Web browser plug-in from the NRC Web site. Further information on the Web-based submission form, including the installation of the Web browser plug-in, is available on the NRC's public Web site at *http://www.nrc.gov/site-help/e-submittals.html.*

Once a participant has obtained a digital ID certificate and a docket has been created, the participant can then submit a request for hearing or petition for leave to intervene. Submissions should be in Portable Document Format (PDF) in accordance with NRC guidance available on the NRC public Web site at *http://www.nrc.gov/site-help/e-submittals.html.* A filing is considered complete at the time the documents are submitted through the NRC's E-Filing system. To be timely, an electronic filing must be submitted to the E-Filing system no later than 11:59 p.m. Eastern Time on the due date. Upon receipt of a transmission, the E-Filing system time-stamps the document and sends the submitter an e-mail notice confirming receipt of the document. The E-Filing system also distributes an e-mail notice that provides access to the document to the NRC Office of the General Counsel and any others who have advised the Office of the Secretary that they wish to participate in the proceeding, so that the filer need not serve the documents on those participants separately. Therefore, applicants and other participants (or their counsel or representative) must apply for and receive a digital ID certificate before a hearing request/petition to intervene is filed so that they can obtain access to the document via the E-Filing system.

A person filing electronically using the agency's adjudicatory E-Filing system may seek assistance by

contacting the NRC Meta System Help Desk through the "Contact Us" link located on the NRC Web site at *http://www.nrc.gov/site-help/e-submittals.html,* by e-mail at *MSHD.Resource@nrc.gov,* or by a toll-free call at (866) 672–7640. The NRC Meta System Help Desk is available between 8 a.m. and 8 p.m., Eastern Time, Monday through Friday, excluding government holidays.

Participants who believe that they have a good cause for not submitting documents electronically must file an exemption request, in accordance with 10 CFR 2.302(g), with their initial paper filing requesting authorization to continue to submit documents in paper format. Such filings must be submitted by: (1) First class mail addressed to the Office of the Secretary of the Commission, U.S. Nuclear Regulatory Commission, Washington, DC 20555–0001, Attention: Rulemaking and Adjudications Staff; or (2) courier, express mail, or expedited delivery service to the Office of the Secretary, Sixteenth Floor, One White Flint North, 11555 Rockville Pike, Rockville, Maryland, 20852, Attention: Rulemaking and Adjudications Staff. Participants filing a document in this manner are responsible for serving the document on all other participants. Filing is considered complete by first-class mail as of the time of deposit in the mail, or by courier, express mail, or expedited delivery service upon depositing the document with the provider of the service. A presiding officer, having granted an exemption request from using E-Filing, may require a participant or party to use E-Filing if the presiding officer subsequently determines that the reason for granting the exemption from use of E-Filing no longer exists.

Documents submitted in adjudicatory proceedings will appear in NRC's electronic hearing docket which is available to the public at *http://ehd.nrc.gov/EHD_Proceeding/home.asp,* unless excluded pursuant to an order of the Commission, or the presiding officer. Participants are requested not to include personal privacy information, such as social security numbers, home addresses, or home phone numbers in their filings, unless an NRC regulation or other law requires submission of such information. With respect to copyrighted works, except for limited excerpts that serve the purpose of the adjudicatory filings and would constitute a Fair Use application, participants are requested not to include copyrighted materials in their submission.

Petitions for leave to intervene must be filed no later than 60 days from the date of publication of this notice. Non-timely filings will not be entertained absent a determination by the presiding officer that the petition or request should be granted or the contentions should be admitted, based on a balancing of the factors specified in 10 CFR 2.309(c)(1)(i)–(viii).

For further details with respect to this license amendment application, see the application for amendment which is available for public inspection at the Commission's PDR, located at One White Flint North, Public File Area O1F21, 11555 Rockville Pike (first floor), Rockville, Maryland. Publicly available records will be accessible from the ADAMS Public Electronic Reading Room on the Internet at the NRC Web site, *http://www.nrc.gov/reading-rm/adams.html.* Persons who do not have access to ADAMS or who encounter problems in accessing the documents located in ADAMS, should contact the NRC PDR Reference staff at 1–800–397–4209, 301–415–4737, or by e-mail to *pdr.resource@nrc.gov.*

Arizona Public Service Company, et al., Docket Nos. STN 50–528, STN 50–529, and STN 50–530, Palo Verde Nuclear Generating Station, Units 1, 2, and 3, Maricopa County, Arizona

Date of amendment request: August 27, 2010.

Description of amendment request: The amendments would revise the methodology in the feedwater line break with loss of offsite power and single failure event (FWLB/LOP/SF) analysis summarized in the Palo Verde Nuclear Generating Station Updated Final Safety Analysis Report. The revision would change the credited operator action time to 20 minutes from 30 minutes to control the pressurizer level.

Basis for proposed no significant hazards consideration determination: As required by 10 CFR 50.91(a), the licensee has provided its analysis of the issue of no significant hazards consideration, which is presented below:

1. Does the proposed amendment involve a significant increase in the probability or consequences of an accident previously evaluated?

Response: No.

The proposed change in the credited operator action time to 20 minutes from 30 minutes does not change the probability of a FWLB/LOP/SF event as the operator actions are credited after the start of the event.

This change in operator action time does not adversely affect accident initiators or precursors, the ability of structures, systems, and components (SSCs) to perform their intended functions to mitigate the consequences of an initiating event within the assumed acceptance limits, or radiological release assumptions used in evaluating the consequences of an accident previously evaluated.

Therefore, the proposed change does not involve a significant increase in the probability or consequences of an accident previously evaluated.

2. Does the proposed amendment create the possibility of a new or different kind of accident from any accident previously evaluated?

Response: No.

The proposed change in the credited operator action time to 20 minutes from 30 minutes does not involve any design or physical changes to the facility or any SSC of that facility. The proposed change does not create any new failure modes or adversely affect the interaction between any structure, system or component.

Therefore, the proposed change does not create the possibility of a new or different kind of accident from any accident previously evaluated.

3. Does the proposed amendment involve a significant reduction in a margin of safety?

Response: No.

The proposed change in the credited operator action time to 20 minutes from 30 minutes does not alter the manner in which safety limits or limiting safety system settings are determined. No changes to instrument/system actuation setpoints are involved. The safety analysis acceptance criteria are not impacted by this change and the proposed change will not permit plant operation in a configuration outside the design basis. The assumed 20 minutes for operator action is consistent with Industry and NRC guidance.

Therefore, the proposed change does not involve a significant reduction in a margin of safety.

The NRC staff has reviewed the licensee's analysis and, based on that review, it appears that the three standards of 10 CFR 50.92(c) are satisfied. Therefore, the NRC staff proposes to determine that the request for amendments involves no significant hazards consideration.

Attorney for licensee: Michael G. Green, Senior Regulatory Counsel, Pinnacle West Capital Corporation, P.O. Box 52034, Mail Station 8695, Phoenix, Arizona 85072–2034.

NRC Branch Chief: Michael T. Markley.

Florida Power and Light Company (FPL), Docket Nos. 50–250 and 50–251, Turkey Point Plant, Units 3 and 4, Miami-Dade County, Florida

Date of amendment request: August 5, 2010.

Description of amendment request: The proposed amendments would revise technical specification (TS) 5.5.1 Fuel Storage—Criticality, to include new spent fuel storage patterns that account for both the increase in fuel maximum enrichment from 4.5 weight

percentage (wt%) U–235 to 5.0 wt% U–235 and the impact on the fuel of higher power operation proposed under the Extended Power Uprate (EPU) project. Although the fuel storage has been analyzed at the higher fuel enrichment in the new criticality analysis, the fuel enrichment limit of 4.5 wt% U–235 specified in TS 5.5.1 will not be changed under this license amendment request. The proposed TS changes and a new supporting criticality analysis are being submitted to revise the current licensing basis analysis for both new fuel and spent fuel pool storage.

Basis for proposed no significant hazards consideration determination: As required by 10 CFR 50.91(a), the licensee has provided its analysis of the issue of no significant hazards consideration, which is presented below:

1. Does the proposed amendment involve a significant increase in the probability or consequences of an accident previously evaluated?

No. The proposed amendments do not change or modify the fuel, fuel handling processes, fuel storage racks, number of fuel assemblies that may be stored in the spent fuel pool (SFP), decay heat generation rate, or the spent fuel pool cooling and cleanup system. The proposed amendment was evaluated for impact on the following previously evaluated events and accidents:

a. A fuel handling accident (FHA),
b. A cask drop accident,
c. A fuel mispositioning event,
d. A spent fuel pool boron dilution event,
e. A seismic event, and
f. A loss of spent fuel pool cooling event.

Although the proposed amendment will require increased handling of the fuel, the probability of a FHA is not significantly increased because the implementation of the proposed amendment will employ the same equipment and process to handle fuel assemblies that is currently used. Also, tests have confirmed that the Metamic inserts can be installed and removed without damaging the host fuel assemblies. The FHA radiological dose consequences associated with fuel enrichment at this level were addressed in LAR [license amendment request] 196 on Alternative Source Term implementation at EPU conditions and remain unchanged. Therefore, the proposed amendments do not significantly increase the probability or consequences of a FHA.

The proposed amendments do not increase the probability of dropping a fuel transfer cask because they do not introduce any new heavy loads to the SFP and do not affect heavy load handling processes. Also, the insertion of Metamic rack inserts does not increase the consequences of the cask drop accident because the radiological source term of that accident is developed from a non-mechanistically derived quantity of damaged fuel stored in the spent fuel pool. Therefore, the proposed amendments do not significantly increase the probability or consequences of a cask drop accident.

Operation in accordance with the proposed amendment will not change the probability of a fuel mispositioning event because fuel movement will continue to be controlled by approved fuel handling procedures. These procedures continue to require identification of the initial and target locations for each fuel assembly that is moved. The consequences of a fuel mispositioning event are not changed because the reactivity analysis demonstrates that the same subcriticality criteria and requirements continue to be met for the worst-case fuel mispositioning event.

Operation in accordance with the proposed amendment will not change the probability of a boron dilution event because the systems and events that could affect spent fuel pool soluble boron are unchanged. The consequences of a boron dilution event are unchanged because the proposed amendment reduces the soluble boron requirement below the currently required value and the maximum possible water volume displaced by the inserts is an insignificant fraction of the total spent fuel pool water volume.

Operation in accordance with the proposed amendment will not change the probability of a seismic event. The consequences of a seismic event are not significantly increased because the forcing functions for seismic excitation are not increased and because the mass of storage racks with Metamic inserts is not appreciably increased. Seismic analyses demonstrate adequate stress levels in the storage racks when inserts are installed.

Operation in accordance with the proposed amendment will not change the probability of a loss of SFP cooling event because the systems and events that could affect SFP cooling are unchanged. The consequences are not significantly increased because there are no changes in the SFP heat load or SFP cooling systems, structures or components. Furthermore, conservative analyses indicate that the current design requirements and criteria continue to be met with the Metamic inserts installed.

Therefore, the proposed changes do not involve a significant increase in the probability or consequences of an accident previously evaluated.

2. Does the proposed amendment create the possibility of a new or different kind of accident from any accident previously evaluated?

No. The proposed amendments do not change or modify the fuel, fuel handling processes, fuel racks, number of fuel assemblies that may be stored in the pool, decay heat generation rate, or the spent fuel pool cooling and cleanup system. The effects of operating with the proposed amendment are listed below. The proposed amendments were evaluated for the potential of each effect to create the possibility of a new or different kind of accident:

a. Addition of inserts to the fuel storage racks,
b. New storage patterns,
c. Additional weight from the inserts,
d. Insert movement above fuel, and
e. Displacement of fuel pool water by the inserts.

Each insert will be placed between a fuel assembly and the storage cell wall, taking up some of the space available on two sides of the fuel assembly. Tests confirm that the insert can be installed and removed without damaging the fuel assembly. Analyses demonstrate that the presence of the inserts does not adversely affect spent fuel cooling, seismic capability, or subcriticality. The aluminum (alloy 6061) and boron carbide materials of construction have been shown to be compatible with nuclear fuel, storage racks and spent fuel pool environments, and generate no adverse material interactions. Therefore, placing the inserts into the spent fuel pool storage racks cannot cause a new or different kind of accident.

Operation with the proposed fuel storage patterns will not create a new or different kind of accident because fuel movement will continue to be controlled by approved fuel handling procedures. These procedures continue to require identification of the initial and target locations for each fuel assembly that is moved. There are no changes in the criteria or design requirements pertaining to fuel storage safety, including subcriticality requirements, and analyses demonstrate that the proposed storage patterns meet these requirements and criteria with adequate margins. Therefore, the proposed storage patterns cannot cause a new or different kind of accident.

Operation with the added weight of the Metamic inserts will not create a new or different accident. The net effect of the adding the maximum number of inserts is to add less than one percent to the weight of the loaded racks. Furthermore, the analyses of the racks with Metamic inserts installed demonstrate that the stress levels in the rack modules continue to be considerably less than allowable stress limits. Therefore, the added weight from the inserts cannot cause a new or different kind of accident.

Operation with insert movement above stored fuel will not create a new or different kind of accident. The insert with its handling tool weighs considerably less than the weight of a single fuel assembly. Single fuel assemblies are routinely moved safely over fuel assemblies and the same level of safety in design and operation will be maintained when moving the inserts. Furthermore, the effect of a dropped insert to block the top of a storage cell has been evaluated in thermal-hydraulic analyses. Therefore, the movement of inserts cannot cause a new or different kind of accident.

Whereas the installed rack inserts will displace a very small fraction of the fuel pool water volume and impose a very small reduction in operator response time to previously-evaluated SFP accidents, the reduction will not promote a new or different kind of accident. Also, displacement of water along two sides of a stored fuel assembly may have some local reduction in the peripheral cooling flow; however, this effect would be small compared to the flow induced through the fuel assembly and would in no way promote a new or different kind of accident.

The accidents and events previously analyzed and presented in the Boraflex Remedy and Alternative Source Term LARs remain bounding. Therefore, the proposed changes do not create the possibility of a new or different kind of accident from any accident previously evaluated.

3. Does the proposed amendment involve a significant reduction in the margin of safety?

No. The proposed change was evaluated for its effect on current margins of safety as they relate to criticality, structural integrity, and spent fuel heat removal capability.

The margin of safety for subcriticality required by 10 CFR 50.68(b)(4) is unchanged. New criticality analysis confirms that operation in accordance with the proposed amendment continues to meet the required subcriticality margins.

The structural evaluations for the racks and spent fuel pool with Metamic inserts installed show that the rack and spent fuel pool are unimpaired by loading combinations during seismic motion, and there is no adverse seismic-induced interaction between the rack and Metamic inserts.

The proposed change does not affect spent fuel heat generation or the spent fuel pool cooling systems. A conservative analysis indicates that the design basis requirements and criteria for spent fuel cooling continue to be met with the Metamic inserts in place, and displacing coolant. Thermal hydraulic analysis of the local effects of an installed rack insert blocking peripheral flow show a small increase in local water and fuel clad temperatures, but will remain within acceptable limits including no departure from nucleate boiling.

Therefore, the proposed changes do not involve a significant reduction in the margin of safety.

Based on the above discussion, FPL has determined that the proposed change does not involve a significant hazards consideration.

The NRC staff has reviewed the licensee's analysis and, based on this review, it appears that the three standards of 50.92(c) are satisfied. Therefore, the NRC staff proposes to determine that the amendment request involves no significant hazards consideration.

Attorney for licensee: M.S. Ross, Attorney, Florida Power & Light, P.O. Box 14000, Juno Beach, Florida 33408–0420.

NRC Branch Chief: Douglas A. Broaddus.

Notice of Issuance of Amendments to Facility Operating Licenses

During the period since publication of the last biweekly notice, the Commission has issued the following amendments. The Commission has determined for each of these amendments that the application complies with the standards and requirements of the Atomic Energy Act of 1954, as amended (the Act), and the Commission's rules and regulations. The Commission has made appropriate findings as required by the Act and the Commission's rules and regulations in 10 CFR Chapter I, which are set forth in the license amendment.

Notice of Consideration of Issuance of Amendment to Facility Operating License, Proposed No Significant Hazards Consideration Determination, and Opportunity for A Hearing in connection with these actions was published in the **Federal Register** as indicated.

Unless otherwise indicated, the Commission has determined that these amendments satisfy the criteria for categorical exclusion in accordance with 10 CFR 51.22. Therefore, pursuant to 10 CFR 51.22(b), no environmental impact statement or environmental assessment need be prepared for these amendments. If the Commission has prepared an environmental assessment under the special circumstances provision in 10 CFR 51.22(b) and has made a determination based on that assessment, it is so indicated.

For further details with respect to the action see (1) the applications for amendment, (2) the amendment, and (3) the Commission's related letter, Safety Evaluation and/or Environmental Assessment as indicated. All of these items are available for public inspection at the Commission's Public Document Room (PDR), located at One White Flint North, Public File Area 01F21, 11555 Rockville Pike (first floor), Rockville, Maryland. Publicly available records will be accessible from the Agencywide Documents Access and Management System (ADAMS) Public Electronic Reading Room on the internet at the NRC Web site, *http://www.nrc.gov/reading-rm/adams.html.* If you do not have access to ADAMS or if there are problems in accessing the documents located in ADAMS, contact the PDR Reference staff at 1–(800) 397–4209, (301) 415–4737 or by e-mail to *pdr.resource@nrc.gov.*

Arizona Public Service Company, et al., Docket Nos. STN 50–528, STN 50–529, and STN 50–530, Palo Verde Nuclear Generating Station, Unit Nos. 1, 2, and 3, Maricopa County, Arizona

Date of application for amendment: September 28, 2009, as supplemented by letters dated June 24 and September 3 and 24, 2010.

Brief description of amendment: The amendments revised Required Action A.1 of Technical Specification 3.8.7, "Inverters—Operating," for the Palo Verde Nuclear Generating Station, Units 1, 2, and 3, by extending the Completion Time for restoration of an inoperable vital alternating current inverter from 24 hours to 7 days.

Date of issuance: September 29, 2010.

Effective date: As of the date of issuance and shall be implemented within 60 days from the date of issuance.

Amendment No.: Unit 1—180; Unit 2—180; Unit 3—180.

Facility Operating License Nos. NPF–41, NPF–51, and NPF–74: The amendment revised the Operating Licenses and Technical Specifications.

Date of initial notice in ***Federal Register***: December 1, 2009 (74 FR 62833). The supplemental letters dated June 24 and September 3 and 24, 2010, provided additional information that clarified the application, did not expand the scope of the application as originally noticed, and did not change the staff's original proposed no significant hazards consideration determination as published in the **Federal Register**.

The Commission's related evaluation of the amendments is contained in a Safety Evaluation dated September 29, 2010.

No significant hazards consideration comments received: No.

Duke Energy Carolinas, LLC, et al., Docket No. 50–414, Catawba Nuclear Station, Unit 2, York County, South Carolina

Date of application for amendment: April 28, 2010, as supplemented by letter dated September 9, 2010.

Brief description of amendment: The amendment revised the Technical Specification (TS) 5.5.9 to exclude portions of the Steam Generator (SG) tube from periodic SG tube inspections and plugging or repair. In addition, reporting requirement changes were made to TS 5.6.8.

Date of issuance: September 27, 2010.

Effective date: As of the date of issuance and shall be implemented prior to requiring the SGs to be operable at the completion of the End of Cycle 17 Refueling Outage.

Amendment No.: 257.

Renewed Facility Operating License No. NPF–52: Amendment revised the license and the TSs.

Date of initial notice in ***Federal Register***: July 13, 2010 (75 FR 39977). The supplement dated September 9, 2010, provided additional information that clarified the application, did not expand the scope of the application as originally noticed, and did not change the staff's original proposed no significant hazards consideration determination.

The Commission's related evaluation of the amendment is contained in a Safety Evaluation dated September 27, 2010.

No significant hazards consideration comments received: No.

Entergy Nuclear Operations, Inc., Docket No. 50–333, James A. FitzPatrick Nuclear Power Plant, Oswego County, New York

Date of application for amendment: April 21, 2010, as supplemented by letters dated July 28 and September 2, 2010.

Brief description of amendment: The amendment revised James A. FitzPatrick Technical Specification (TS) 2.0, "Safety Limits (SLs)." Specifically, TS 2.1.1.2 replaced the listed safety limit minimum critical power ratio values of 1.07 for two recirculation loop operation and 1.09 for single recirculation loop operation with new values of 1.08 and 1.11, respectively.

Date of issuance: September 27, 2010.

Effective date: As of the date of issuance, and shall be implemented within 30 days.

Amendment No.: 299.

Renewed Facility Operating License No. DPR–59: The amendment revised the License and the Technical Specifications.

Date of initial notice in ***Federal Register***: June 15, 2010 (75 FR 33841).

The supplements dated July 28 and September 2, 2010, provided additional information that clarified the application, did not expand the scope of the application as originally noticed, and did not change the NRC staff's original proposed no significant hazards consideration determination as published in the **Federal Register**.

The Commission's related evaluation of the amendment is contained in a Safety Evaluation dated September 27, 2010.

No significant hazards consideration comments received: No.

Exelon Generating Company, LLC, Docket No. 50–219, Oyster Creek Nuclear Generating Station, Ocean County, New Jersey

Date of application for amendment: October 30, 2009, as supplemented by letters dated April 16, 2010, and August 31, 2010.

Brief description of amendment: The amendment revises the Oyster Creek Technical Specifications to relocate a number of Surveillance Requirement frequencies to a licensee-controlled document.

Date of issuance: September 27, 2010.

Effective date: As of its date of issuance, and shall be implemented within 60 days.

Amendment No.: 276.

Renewed Facility Operating License No. DPR–16: The amendment revised the License and Technical Specifications.

Date of initial notice in ***Federal Register***: December 29, 2009 (74 FR 68869). The supplements dated April 16, 2010, and August 31, 2010, provided additional information that clarified the application, did not expand the scope of the application as originally noticed, and did not change the NRC staff's original proposed no significant hazards determination.

The Commission's related evaluation of the amendment is contained in a Safety Evaluation dated September 27, 2010.

No significant hazards consideration comments received: No.

Exelon Generation Company, LLC, and PSEG Nuclear, LLC, Docket No. 50–277, Peach Bottom Atomic Power Station (PBAPS), Unit 2, York and Lancaster Counties, Pennsylvania

Date of application for amendments: May 27, 2010, as supplemented on July 15, 2010, and August 25, 2010.

Brief description of amendments: The amendment modifies the PBAPS Unit 2 Technical Specification (TS) Section 2.1.1.2 to reflect revised Safety Limit Minimum Critical Power Ratio (SLMCPR) values for operating cycle 19. The SLMCPR analysis establishes SLMCPR values that will ensure that during normal operation and during abnormal operational transients, at least 99.9 percent of all fuel rods in the core do not experience transition boiling if the limit is not violated.

Date of issuance: September 28, 2010.

Effective date: As of the date of issuance and shall be implemented within 30 days from the date of issuance.

Amendment No.: 279.

Renewed Facility Operating License No. DPR–44: Amendment revised the Technical Specifications.

Date of initial notice in ***Federal Register***: July 26, 2010 (75 FR 43574).

The supplements dated July 15, 2010, and August 25, 2010, clarified the application, did not expand the scope of the application as originally noticed, and did not change the initial proposed no significant hazards consideration determination.

The Commission's related evaluation of the amendment is contained in a Safety Evaluation dated September 28, 2010.

No significant hazards consideration comments received: No.

Pacific Gas and Electric Company, Docket Nos. 50–275 and 50–323, Diablo Canyon Nuclear Power Plant, Unit Nos. 1 and 2, San Luis Obispo County, California

Date of application for amendments: June 14, 2010, as supplemented on August 9, 2010.

Brief description of amendments: The amendments revised the licensing basis, as described in the Final Safety Analysis Report Update, to include damping values for the seismic design and analysis of the integrated head assembly (IHA) that are consistent with the recommendations of Regulatory Guide (RG) 1.61, "Damping Values for Seismic Design of Nuclear Power Plants," Revision 1. In addition, the RG 1.61, Revision 1, Table 1 note allowing the use of a "weighted average" for design-basis safe-shutdown earthquake damping values applicable to steel structures of different connection types will also be applied to determine the IHA design-basis operating-basis earthquake damping values.

Date of issuance: September 29, 2010.

Effective date: As of its date of issuance and shall be implemented within 30 days from the date of issuance.

Amendment Nos.: Unit 1—208; Unit 2—210.

Facility Operating License Nos. DPR–80 and DPR–82: The amendments revised the Facility Operating Licenses.

Date of initial notice in ***Federal Register***: July 27, 2010 (75 FR 44025). The supplemental letter dated August 9, 2010, provided additional information that clarified the application, did not expand the scope of the application as originally noticed, and did not change the staff's original proposed no significant hazards consideration determination as published in the **Federal Register**.

The Commission's related evaluation of the amendments is contained in a Safety Evaluation dated September 29, 2010.

No significant hazards consideration comments received: No.

PSEG Nuclear LLC, Docket No. 50–354, Hope Creek Generating Station, Salem County, New Jersey

Date of application for amendment: December 1, 2009, as supplemented by letters dated July 23, and August 19, 2010.

Brief description of amendment: The amendment changes the Technical Specifications (TSs) to: (1) Revise the required frequency of testing control rod scram times from "at least once per 120 days of POWER OPERATION" to "at

least once per 200 days of POWER OPERATION"; (2) revise the evaluation methodology for control rod scram time tests; (3) establish a new category of operable but "slow" control rods; and (4) establish allowable limits for the number and distribution of "slow" rods. The changes are based, in part, on Nuclear Regulatory Commission-approved TS Task Force (TSTF) change traveler TSTF–460, "Control Rod Scram Time Testing Frequency."

Date of issuance: September 27, 2010.

Effective date: As of the date of issuance, to be implemented within 60 days.

Amendment No.: 183.

Facility Operating License No. NPF–57: The amendment revised the TSs and the License.

Date of initial notice in ***Federal Register:*** January 26, 2010 (75 FR 4119).

The letters dated July 23, and August 19, 2010, provided clarifying information that did not change the initial proposed no significant hazards consideration determination or expand the application beyond the scope of the original **Federal Register** notice.

The Commission's related evaluation of the amendment is contained in a Safety Evaluation dated September 27, 2010.

No significant hazards consideration comments received: No.

R.E. Ginna Nuclear Power Plant, LLC, Docket No. 50–244, R.E. Ginna Nuclear Power Plant, Wayne County, New York

Date of application for amendment: November 30, 2009, as supplemented by letter dated May 14, 2010.

Brief description of amendment: The amendment provides authorization to upgrade selected Emergency Action Levels based on Nuclear Energy Institute (NEI) 99–01, "Methodology for Development of Emergency Action Levels," Revision 5, dated February 2008 using the guidance of NRC Regulatory Issue Summary 2003–18, Supplement 2, "Use of Nuclear Energy Institute (NEI) 99–01, Methodology for Development of Emergency Action Levels."

Date of issuance: October 6, 2010.

Effective date: As of the date of issuance to be implemented within 60 days.

Amendment No.: 111.

Renewed Facility Operating License No. DPR–18: Amendment revised the License.

Date of initial notice in ***Federal Register:*** February 9, 2010 (75 FR 6411).

The letter dated May 14, 2010, provided additional information that clarified the application, did not expand the scope of the application as originally noticed, and did not change the staff's original proposed no significant hazards consideration determination as published in the **Federal Register**.

The Commission's related evaluation of the amendment is contained in a Safety Evaluation dated October 6, 2010.

No significant hazards consideration comments received: No.

South Carolina Electric and Gas Company, South Carolina Public Service Authority, Docket No. 50–395, Virgil C. Summer Nuclear Station, Unit No. 1, Fairfield County, South Carolina

Date of application for amendment: February 17, 2009, as supplemented on June 15, December 1, and December 23, 2009, January 14, and July 16, 2010.

Brief description of amendment: The amendment revises the technical specification changes and design-basis accident radiological consequence analyses to support implementation of alternative source term methodology, pursuant to Title 10 of the Code of Federal Regulations, Part 50, Section 50.67, "Accident source term," using the guidance described in Regulatory Guide 1.183, "Alternative Radiological Source Terms for Evaluating Design-basis Accidents at Nuclear Power Reactors."

Date of issuance: October 4, 2010.

Effective date: As of the date of issuance and shall be implemented within 90 days.

Amendment No.: 183.

Renewed Facility Operating License No. NPF–12: Amendment revises the Technical Specifications.

Date of initial notice in ***Federal Register:*** March 24, 2009 (74 FR 12395).

The Commission's related evaluation of the amendment is contained in a Safety Evaluation dated October 4, 2010.

No significant hazards consideration comments received: No.

Virginia Electric and Power Company, et al., Docket Nos. 50–280 and 50–281, Surry Power Station, Unit Nos. 1 and 2, Surry County, Virginia

Date of application for amendments: January 27, 2010, as supplemented by letters dated February 4 and April 29, 2010.

Brief Description of amendments: These amendments would increase each unit's rated power (RP) level from 2546 megawatts thermal (MWt) to 2587 MWt, and make Technical Specifications changes as necessary to support operation at the uprated power level. The proposed change is an increase in RP of approximately 1.6 percent.

Date of issuance: September 28, 2010.

Effective date: As of the date of issuance and shall be implemented within 90 days.

Amendment Nos.: 269 and 268.

Renewed Facility Operating License Nos. DPR–32 and DPR–37: Amendments change the licenses and the technical specifications.

Date of initial notice in ***Federal Register***: April 6, 2010 (75 FR 17447).

The supplements provided additional information that clarified the application, did not expand in the scope of the application as originally noticed, and did not change the staff's original proposed no significant hazards consideration determination.

The Commission's related evaluation of the amendments is contained in a Safety Evaluation dated September 24, 2010.

No significant hazards consideration comments received: No.

Wolf Creek Nuclear Operating Corporation, Docket No. 50–482, Wolf Creek Generating Station, Coffey County, Kansas

Date of amendment request: December 16, 2009 as supplemented by letter dated June 2, 2010.

Brief description of amendment: The amendment revised the licensing basis for the approved fire protection program as described in the Wolf Creek Generating Station (WCGS) Updated Safety Analysis Report (USAR) to allow use of the fire-resistive cable for certain power and control cables associated with two motor-operated valves on Train B Component Cooling Water System. This is a deviation from certain technical commitments to Title 10 of the Code of Federal Regulations (10 CFR) part 50, Appendix R, Section III.G.2, as described in Appendix 9.5E of the WCGS USAR.

Date of issuance: September 30, 2010.

Effective date: As of its date of issuance and shall be implemented within 180 days from the date of issuance.

Amendment No.: 189.

Renewed Facility Operating License No. NPF–42. The amendment revised the Operating License.

Date of initial notice in ***Federal Register***: March 9, 2010 (75 FR 10831). The supplemental letter dated June 2, 2010, provided additional information that clarified the application, did not expand the scope of the application as originally noticed, and did not change the staff's original proposed no significant hazards consideration determination as published in the **Federal Register**.

The Commission's related evaluation of the amendment is contained in a

Safety Evaluation dated September 30, 2010.

No significant hazards consideration comments received: No.

Dated at Rockville, Maryland, October 7, 2010.

For the Nuclear Regulatory Commission.

Joseph G. Giitter,

Director, Division of Operating Reactor Licensing, Office of Nuclear Reactor Regulation.

[FR Doc. 2010–26152 Filed 10–18–10; 8:45 am]

BILLING CODE 7590–01–P

NUCLEAR REGULATORY COMMISSION

Advisory Committee on Reactor Safeguards

In accordance with the purposes of Sections 29 and 182b of the Atomic Energy Act (42 U.S.C. 2039, 2232b), the Advisory Committee on Reactor Safeguards (ACRS) will hold a meeting on November 4–6, 2010, 11545 Rockville Pike, Rockville, Maryland. The date of this meeting was previously published in the **Federal Register** on Monday, October 14, 2009, (74 FR 52829–52830).

Thursday, November 4, 2010, Conference Room T2–B1, Two White Flint North, Rockville, Maryland

8:30 a.m.–8:35 a.m.: Opening Remarks by the ACRS Chairman (Open)—The ACRS Chairman will make opening remarks regarding the conduct of the meeting.

8:35 a.m.–10 a.m.: Standard Review Plan for Renewal of Independent Spent Fuel Storage Installation Licenses and Dry Cask Storage System Certificates of Compliance (Open)—The Committee will hear presentations by and hold discussions with representatives of the NRC staff regarding the Standard Review Plan for renewal of Independent Spent Fuel Storage Installation Licenses and dry cask storage system Certificates of Compliance.

10:15 a.m.–12 p.m.: Draft Final Revision 2 of NUREG–1801, "Generic Aging Lessons Learned (GALL) Report," and NUREG–1800, "Standard Review Plan for Review of License Renewal Applications for Nuclear Power Plants" (Open)—The Committee will hear presentations by and hold discussions with representatives of the NRC staff regarding Draft Final Revision 2 of NUREG–1801, "Generic Aging Lessons Learned (GALL) Report," and NUREG–1800, "Standard Review Plan for Review of License Renewal Applications for Nuclear Power Plants."

1 p.m.–4 p.m.: Long-Term Core Cooling Approach for the Revised AP1000 Design (Open/Closed)—The Committee will hear presentations by and hold discussions with representatives of the NRC staff and Westinghouse regarding the long-term core cooling approach for the revised AP1000 design.

Note: A portion of this session may be closed in order to discuss and protect information designated as proprietary by Westinghouse and its contractors pursuant to 5 U.S.C. 552b(c)(4).

4:15 p.m.–5 p.m.: Discussion of Topics for Meeting With the Commission (Open)—The Committee will discuss the following topics in preparation for the meeting with the Commission: ABWR Aircraft Impact Assessment; 10 CFR 50.46(a), "Risk-Informed Changes to Loss-of-Coolant Accident Technical Requirements;" Mixed Oxide Fuel Fabrication Facility; ESBWR—Long-Term Core Cooling; and Design Acceptance Criteria.

5:15 p.m.–7 p.m.: Preparation of ACRS Reports (Open)—The Committee will discuss proposed ACRS reports on matters discussed during this meeting.

Friday, November 5, 2010, Conference Room T2–B1, Two White Flint North, Rockville, Maryland

8:30 a.m.–9 a.m.: Discussion of Topics for Meeting with the Commission (Open)—The Committee will continue the discussion of the topics in preparation for the meeting with the Commission.

9:30 a.m.–12:15 p.m.: Meeting with the Commission (Open)—The Committee will meet with the Commission to discuss topics listed above.

1:15 p.m.–2:45 p.m.: Future ACRS Activities/Report of the Planning and Procedures Subcommittee (Open/Closed)—The Committee will discuss the recommendations of the Planning and Procedures Subcommittee regarding items proposed for consideration by the Full Committee during future ACRS Meetings, and matters related to the conduct of ACRS business, including anticipated workload and member assignments. [**Note:** A portion of this meeting may be closed pursuant to 5 U.S.C. 552b (c)(2) and (6) to discuss organizational and personnel matters that relate solely to internal personnel rules and practices of ACRS, and information the release of which would constitute a clearly invasion of personal privacy.]

2:45 p.m.–3 p.m.: Reconciliation of ACRS Comments and Recommendations (Open)—The Committee will discuss the responses from the NRC Executive Director for Operations to comments and recommendations included in recent ACRS reports and letters.

3:15 p.m.—4:15 p.m.: Assessment of the Quality of Selected NRC Research Projects (Open)—The Committee will hold discussions with members of the ACRS Panels performing the quality assessment of the NRC research projects on: NUREG/CR–6947, "Human Factors Consideration with Respect to Emerging Technology in Nuclear Power Plants," and NUREG/CR–6997, "Modeling a Digital Feedwater Control System Using Traditional Probabilistic Risk Assessment Methods."

4:15 p.m.–7 p.m.: Preparation of ACRS Reports (Open)—The Committee will continue its discussion of proposed ACRS reports.

Saturday, November 6, 2010, Conference Room T2–B1, Two White Flint North, Rockville, Maryland

8:30 a.m.–1 p.m.: Preparation of ACRS Reports (Open)—The Committee will continue its discussion of proposed ACRS reports.

1 p.m.–1:30 p.m.: Miscellaneous (Open)—The Committee will continue its discussion related to the conduct of Committee activities and specific issues that were not completed during previous meetings.

Procedures for the conduct of and participation in ACRS meetings were published in the **Federal Register** on October 14, 2009, (74 FR 52829–52830). In accordance with those procedures, oral or written views may be presented by members of the public, including representatives of the nuclear industry. Persons desiring to make oral statements should notify Ms. Ilka Berrios, Cognizant ACRS Staff (*Telephone:* 301–415–3179, *E-mail: Ilka.Berrios@nrc.gov),* five days before the meeting, if possible, so that appropriate arrangements can be made to allow necessary time during the meeting for such statements. In view of the possibility that the schedule for ACRS meetings may be adjusted by the Chairman as necessary to facilitate the conduct of the meeting, persons planning to attend should check with the Cognizant ACRS staff if such rescheduling would result in major inconvenience.

Thirty-five hard copies of each presentation or handout should be provided 30 minutes before the meeting. In addition, one electronic copy of each presentation should be emailed to the Cognizant ACRS Staff one day before meeting. If an electronic copy cannot be provided within this timeframe, presenters should provide the Cognizant

ACRS Staff with a CD containing each presentation at least 30 minutes before the meeting.

In accordance with Subsection 10(d) Public Law 92–463, and 5 U.S.C. 552b(c), certain portions of this meeting may be closed, as specifically noted above. Use of still, motion picture, and television cameras during the meeting may be limited to selected portions of the meeting as determined by the Chairman. Electronic recordings will be permitted only during the open portions of the meeting.

ACRS meeting agenda, meeting transcripts, and letter reports are available through the NRC Public Document Room at *pdr.resource@nrc.gov,* or by calling the PDR at 1–800–397–4209, or from the Publicly Available Records System (PARS) component of NRC's document system (ADAMS) which is accessible from the NRC Web site at *http://www.nrc.gov/reading-rm/adams.html* or *http://www.nrc.gov/reading-rm/doc-collections/ACRS/.*

Video teleconferencing service is available for observing open sessions of ACRS meetings. Those wishing to use this service for observing ACRS meetings should contact Mr. Theron Brown, ACRS Audio Visual Technician (301–415–8066), between 7:30 a.m. and 3:45 p.m. (ET), at least 10 days before the meeting to ensure the availability of this service.

Individuals or organizations requesting this service will be responsible for telephone line charges and for providing the equipment and facilities that they use to establish the video teleconferencing link. The availability of video teleconferencing services is not guaranteed.

Dated: October 13, 2010.

Andrew L. Bates,

Advisory Committee Management Officer.

[FR Doc. 2010–26319 Filed 10–18–10; 8:45 am]

BILLING CODE 7590–01–P

NUCLEAR REGULATORY COMMISSION

[NRC–2010–0002]

Sunshine Federal Register Notice

AGENCY HOLDING THE MEETINGS: Nuclear Regulatory Commission,

DATE: Weeks of October 18, 25, November 1, 8, 15, 22, 2010.

PLACE: Commissioners' Conference Room, 11555 Rockville Pike, Rockville, Maryland.

STATUS: Public and Closed.

Week of October 18, 2010

Monday, October 18, 2010

1:30 p.m. NRC All Employees Meeting (Public Meeting), Marriott Bethesda North Hotel, 5701 Marinelli Road, Rockville, MD 20852.

Wednesday, October 20, 2010

9 a.m. Briefing on Medical Issues (Public Meeting). (Contact: Michael Fuller, 301–415–0520.)

This meeting will be webcast live at the Web address—*http://www.nrc.gov.*

Week of October 25, 2010—Tentative

Tuesday, October 26, 2010

9:30 a.m. Briefing on Security Issues (Closed—Ex. 1)

Week of November 1, 2010—Tentative

Tuesday, November 2, 2010

9:30 a.m. Briefing on Equal Employment Opportunity (EEO) and Small Business Programs (Public Meeting). (Contact: Barbara Williams, 301–415–7388.)

This meeting will be webcast live at the Web address—*http://www.nrc.gov.*

Friday, November 5, 2010

9:30 a.m. Meeting with the Advisory Committee on Reactor Safeguards and Briefing on Design Acceptance Criteria (Public Meeting). (Contact: Cayetano Santos, 301–415–7270.)

This meeting will be webcast live at the Web address—*http://www.nrc.gov.*

Week of November 8, 2010—Tentative

There are no meetings scheduled for the week of November 8, 2010.

Week of November 15, 2010—Tentative

There are no meetings scheduled for the week of November 15, 2010.

Week of November 22, 2010—Tentative

There are no meetings scheduled for the week of November 22, 2010.

* * * * *

* The schedule for Commission meetings is subject to change on short notice. To verify the status of meetings, call (recording)—(301) 415–1292. Contact person for more information: Rochelle Bavol, (301) 415–1651.

* * * * *

The NRC Commission Meeting Schedule can be found on the Internet at: *http://www.nrc.gov/about-nrc/policy-making/schedule.html.*

* * * * *

The NRC provides reasonable accommodation to individuals with disabilities where appropriate. If you need a reasonable accommodation to participate in these public meetings, or need this meeting notice or the transcript or other information from the public meetings in another format (*e.g.* braille, large print), please notify Angela Bolduc, Chief, Employee/Labor Relations and Work Life Branch, at 301–492–2230, TDD: 301–415–2100, or by e-mail at *angela.bolduc@nrc.gov.* Determinations on requests for reasonable accommodation will be made on a case-by-case basis.

* * * * *

This notice is distributed electronically to subscribers. If you no longer wish to receive it, or would like to be added to the distribution, please contact the Office of the Secretary, Washington, DC 20555 (301–415–1969), or send an e-mail to *darlene.wright@nrc.gov.*

Dated: October 14, 2010.

Rochelle C. Bavol,

Policy Coordinator, Office of the Secretary.

[FR Doc. 2010–26374 Filed 10–15–10; 4:15 pm]

BILLING CODE 7590–01–P

SMALL BUSINESS ADMINISTRATION

[Disaster Declaration # 12290 and # 12291]

Illinois Disaster Number IL–00025

AGENCY: U.S. Small Business Administration.

ACTION: Amendment 2.

SUMMARY: This is an amendment of the Presidential declaration of a major disaster for the State of Illinois (FEMA–1935–DR), dated 08/19/2010.

Incident: Severe Storms and Flooding

Incident Period: 07/19/2010 through 08/07/2010.

DATES: *Effective Date:* 10/11/2010.

Physical Loan Application Deadline Date: 11/17/2010.

EIDL Loan Application Deadline Date: 05/19/2011.

ADDRESSES: Submit completed loan applications to: U.S. Small Business Administration, Processing and Disbursement Center, 14925 Kingsport Road, Fort Worth, TX 76155.

FOR FURTHER INFORMATION CONTACT: A. Escobar, Office of Disaster Assistance, U.S. Small Business Administration, 409 3rd Street, SW., Suite 6050, Washington, DC 20416.

SUPPLEMENTARY INFORMATION: The notice of the President's major disaster declaration for the State of Illinois, dated 08/19/2010 is hereby amended to extend the deadline for filing applications for physical damages as a result of this disaster to 11/17/2010.

All other information in the original declaration remains unchanged.

(Catalog of Federal Domestic Assistance Numbers 59002 and 59008)

James E. Rivera,

Associate Administrator for Disaster Assistance.

[FR Doc. 2010–26304 Filed 10–18–10; 8:45 am]

BILLING CODE 8025–01–P

SMALL BUSINESS ADMINISTRATION

SBA North Florida District Advisory Council

AGENCY: U.S. Small Business Administration.

ACTION: Notice of open Federal advisory committee meeting.

SUMMARY: The SBA is issuing this notice to announce the location, date, time, and agenda for the next meeting of the SBA North Florida District Advisory Council. The meeting will be open to the public.

DATES: The meeting will be held on Tuesday, November 16 from 11:30 a.m. to 2 p.m. Eastern Standard Time.

ADDRESSES: The meeting will be held at Sabore: 13005 SW 1st Rd; Suite 129, Newberry, FL 32669.

SUPPLEMENTARY INFORMATION: Pursuant to section 10(a)(2) of the Federal Advisory Committee Act (5 U.S.C., Appendix 2), SBA announces the meeting of the SBA North Florida District Advisory Council. The SBA North Florida District Advisory Council is tasked with providing advice and opinions to SBA regarding the effectiveness of and need for SBA programs, particularly within North Florida and for listening to what is currently happening in the Florida small business community.

The purpose of the meeting is to discuss with the council the current status of small business across North Florida and to discuss the agency status especially in regards to the passing of the jobs bill. The agenda includes: An overview of the status of the SBA as an agency from Wilfredo J. Gonzalez, SBA District Director as well as a luncheon/meeting to hear from the members of the council and to hear from the SBA staff on SBA updates for the District.

FOR FURTHER INFORMATION CONTACT: The meeting is open to the public however advance notice of attendance is requested. Anyone wishing to attend and/or make a presentation to the SBA North Florida District Advisory Council must contact Lola Kress by November 9th, 2010, by fax or email in order to be placed on the agenda. Lola Kress, Business Development Specialist, SBA North Florida District Office, *lola.kress@sba.gov,* (904) 443–1933, fax (202) 481–4188.

Additionally, if you need accommodations because of a disability or require additional information, please contact Lola Kress, Business Development Specialist, SBA North Florida District Office, *lola.kress@sba.gov,* (904) 443–1933.

Dan Jones,

SBA Committee Management Officer.

[FR Doc. 2010–26305 Filed 10–18–10; 8:45 am]

BILLING CODE 8025–01–P

SECURITIES AND EXCHANGE COMMISSION

[Release No. 34–63072; File No. SR–NYSEAmex–2010–97]

Self-Regulatory Organizations; Notice of Filing and Immediate Effectiveness of Proposed Rule Change by NYSE Amex LLC Amending the Exchange Price List

October 7, 2010.

Pursuant to Section 19(b)(1) of the Securities Exchange Act of 1934 (the "Act") [1] and Rule 19b–4 thereunder,[2] notice is hereby given that, on October 1, 2010, NYSE Amex LLC. ("NYSE Amex" or the "Exchange") filed with the Securities and Exchange Commission (the "Commission") the proposed rule change as described in Items I and II below, which Items have been prepared by the Exchange. The Commission is publishing this notice to solicit comments on the proposed rule change from interested persons.

I. Self-Regulatory Organization's Statement of the Terms of Substance of the Proposed Rule Change

The Exchange proposes to amend its 2010 Price List for equities to amend the fees charged for taking liquidity and the rebates for providing liquidity for Nasdaq securities traded pursuant to unlisted trading privileges and incorporate an enhanced rebate for larger displayed orders in trades above $5.00 in lieu of the standard rebate, as well as assess monthly fees for the use of all ports that provide connectivity to its equity trading systems. In its table of credits applicable to Supplemental Liquidity Providers ("SLPs"), the Exchange is modifying language referencing the SLP quoting requirement to reflect a recent rule filing that changed the standard from 3% to 5% of the regular trading day in any calendar month in order to receive a financial rebate. The amended pricing will take effect on October 1, 2010. The text of the proposed rule change is available on the Exchange's Web site at *http://www.nyse.com,* at the Exchange's principal office, on the Commission's Web site at *http://www.sec.gov,* and at the Commission's Public Reference Room.

II. Self-Regulatory Organization's Statement of the Purpose of, and Statutory Basis for, the Proposed Rule Change

In its filing with the Commission, the self-regulatory organization included statements concerning the purpose of, and basis for, the proposed rule change and discussed any comments it received on the proposed rule change. The text of those statements may be examined at the places specified in Item IV below. The Exchange has prepared summaries, set forth in sections A, B, and C below, of the most significant parts of such statements.

A. Self-Regulatory Organization's Statement of the Purpose of, and the Statutory Basis for, the Proposed Rule Change

1. Purpose

The Exchange proposes to amend its 2010 Price List for equities to modify the structure of (i) fees charged for taking liquidity and (ii) rebates for adding liquidity, to market participants, Supplemental Liquidity Providers ("SLPs") and Designated Market Makers ("DMMs"), for Nasdaq securities traded pursuant to unlisted trading privileges whose share price is $1.00 or more.

Currently, market participants, SLPs and DMMs are charged a fee of $0.0013 per share for orders in Nasdaq securities traded pursuant to unlisted trading privileges that take liquidity. Under the proposal, the fee will be $0.0023 per share for orders that take liquidity.

Market participants, other than DMMs and SLPs, that provide liquidity in Nasdaq securities traded pursuant to unlisted trading privileges are currently paid a rebate of $0.0019 per share. Under the proposal, such market participants will be paid a rebate of $0.0030 per share.

Currently, for orders in Nasdaq securities traded pursuant to unlisted trading privileges that provide liquidity, DMMs, and SLPs that meet their quoting requirements pursuant to Rule 107B, are paid a rebate of $0.0021 per share, and SLPs that do not meet their quoting requirements are paid a rebate of $0.0019 per share for orders that provide liquidity. Under the proposal, the rebate will be $0.0031 per share for

[1] 15 U.S.C. 78s(b)(1).

[2] 17 CFR 240.19b–4.

orders that provide liquidity for both DMMs and SLPs that meet their quoting requirements while SLPs that provide liquidity but do not meet their quoting requirements will be paid a rebate of $0.0030 per share.

Additionally, in lieu of the above rebates, the Exchange is proposing to provide a block rebate of $0.0036 per share for executions of displayed liquidity to all market participants and SLPs that provide liquidity in orders in Nasdaq securities traded pursuant to unlisted trading privileges that originally display a minimum of 5,000 shares with a trading price of at least $5.00 per share, for as long as the order is not cancelled in [sic] amount that would reduce the original displayed amount below 5,000 shares. For example, if a 10,000 share order priced above $5.00 displays 10,000 shares, and is then partially executed in the amount of 4,000 shares, the executed 4,000 shares receive the block rebate. The remaining 6,000 shares are still eligible for the block rebate. Additionally, if a 10,000 share order priced above $5.00 displays 10,000 shares, and is then partially canceled in the amount of 6,000 shares, the remaining 4,000 shares will not be eligible for the block rebate and would receive the regular rebate when traded. Finally, if a 10,000 share order priced above $5.00 displays 10,000 shares, and is then partially executed in the amount of 2,000 shares, the executed 2,000 shares receive the block rebate, and the remaining 8,000 shares are still eligible for the block rebate. However, if the client then cancels 6,000 shares, the remaining 2,000 shares are not eligible for the block rebate and will receive the regular rebate when traded. DMMs will receive a block rebate of $0.0036 per share in Nasdaq securities traded pursuant to unlisted trading privileges for executions of the displayed portions of s-Quotes that provide liquidity and display 5,000 shares or more at the time of execution with a trading price of at least $5.00 per share.

Additionally, the Exchange proposes to amend its 2010 Price List for equities to assess monthly fees for the use of all ports that provide connectivity to its equity trading systems. A number of other markets already charge such fees, but the Exchange has not previously done so.

The level of activity with respect to a particular port will not affect the assessment of monthly fees, so even if a particular port that is available to a participant is not used, the participant will still be billed for that port. The monthly fee for ports will be $100 per pair per month up to five pairs, then $500 for each additional five pairs. For example, the fee for seven pairs of ports will be $1,000 per month. Billing for ports will be based on the number of ports on the third business day prior to the end of the month.

In its table of credits applicable to SLPs, the Exchange is modifying language referencing the SLP quoting requirement to reflect a recent rule filing that changed the standard from 3% to 5% of the regular trading day in any calendar month in order to receive a financial rebate.[3]

These changes are intended to be effective immediately for all transactions beginning October 1, 2010.

2. Statutory Basis

The Exchange believes that the proposed rule change is consistent with the provisions of Section 6 of the Securities Exchange Act of 1934 (the "Act"),[4] in general, and Section 6(b)(4) of the Act,[5] in particular, in that it is designed to provide for the equitable allocation of reasonable dues, fees, and other charges among its members and other persons using its facilities. The Exchange believes that the proposal does not constitute an inequitable allocation of fees, as all similarly situated member organizations will be charged the same amount and access to the Exchange's market is offered on fair and non-discriminatory terms.

B. Self-Regulatory Organization's Statement on Burden on Competition

The Exchange does not believe that the proposed rule change will impose any burden on competition that is not necessary or appropriate in furtherance of the purposes of the Act.

C. Self-Regulatory Organization's Statement on Comments on the Proposed Rule Change Received From Members, Participants, or Others

No written comments were solicited or received with respect to the proposed rule change.

III. Date of Effectiveness of the Proposed Rule Change and Timing for Commission Action

The foregoing rule change is effective upon filing pursuant to Section 19(b)(3)(A)[6] of the Act and subparagraph (f)(2) of Rule 19b–4[7] thereunder, because it establishes a due, fee, or other charge imposed by NYSE Amex.

At any time within 60 days of the filing of the proposed rule change, the Commission summarily may temporarily suspend such rule change if it appears to the Commission that such action is necessary or appropriate in the public interest, for the protection of investors, or otherwise in furtherance of the purposes of the Act.

IV. Solicitation of Comments

Interested persons are invited to submit written data, views, and arguments concerning the foregoing, including whether the proposed rule change is consistent with the Act. Comments may be submitted by any of the following methods:

Electronic Comments

- Use the Commission's Internet comment form (*http://www.sec.gov/rules/sro.shtml*); or
- Send an e-mail to *rule-comments@sec.gov.* Please include File Number SR–NYSEAmex–2010–97 on the subject line.

Paper Comments

- Send paper comments in triplicate to Elizabeth M. Murphy, Secretary, Securities and Exchange Commission, 100 F Street, NE., Washington, DC 20549–1090.

All submissions should refer to File Number SR–NYSEAmex–2010–97. This file number should be included on the subject line if e-mail is used. To help the Commission process and review your comments more efficiently, please use only one method. The Commission will post all comments on the Commission's Internet Web site (*http://www.sec.gov/rules/sro.shtml*). Copies of the submission, all subsequent amendments, all written statements with respect to the proposed rule change that are filed with the Commission, and all written communications relating to the proposed rule change between the Commission and any person, other than those that may be withheld from the public in accordance with the provisions of 5 U.S.C. 552, will be available for website viewing and printing in the Commission's Public Reference Room, 100 F Street, NE., Washington, DC 20549, on official business days between the hours of 10 a.m. and 3 p.m. Copies of the filing also will be available for inspection and copying at the principal office of the Exchange. All comments received will be posted without change; the Commission does not edit personal identifying information from

[3] *See* Securities Exchange Act Release No. 62792 (August 30, 2010), 75 FR 54407 (September 7, 2010) (File No. SR–NYSEAmex–2010–85).

[4] 15 U.S.C. 78f(b).

[5] 15 U.S.C. 78f(b)(4).

[6] 15 U.S.C. 78s(b)(3)(A).

[7] 17 CFR 240.19b–4(f)(2).

submissions. You should submit only information that you wish to make available publicly. All submissions should refer to File Number SR–NYSEAmex–2010–97 and should be submitted on or before November 9, 2010.

For the Commission, by the Division of Trading and Markets, pursuant to delegated authority.[8]

Florence E. Harmon,

Deputy Secretary.

[FR Doc. 2010–26109 Filed 10–18–10; 8:45 am]

BILLING CODE 8011–01–P

SECURITIES AND EXCHANGE COMMISSION

[Release No. 34–63083; File No. SR–NASDAQ–2010–127]

Self-Regulatory Organizations; The NASDAQ Stock Market LLC; Notice of Filing and Immediate Effectiveness of Proposed Rule Change To Modify NASDAQ's Order Routing Rule

October 13, 2010.

Pursuant to Section 19(b)(1) of the Securities Exchange Act of 1934 (the "Act") [1] and Rule 19b–4 thereunder,[2] notice is hereby given that on October 1, 2010, The NASDAQ Stock Market LLC ("NASDAQ" or the "Exchange") filed with the Securities and Exchange Commission (the "Commission") the proposed rule change as described in Items I and II below, which Items have been prepared by the Exchange. The Commission is publishing this notice to solicit comments on the proposed rule change from interested persons.

I. Self-Regulatory Organization's Statement of the Terms of Substance of the Proposed Rule Change

The Exchange is filing this proposed rule change to amend Rule 4758 to modify the SAVE routing option to reflect the expected launch of NASDAQ OMX PSX ("PSX") as a new venue for trading NMS stocks on October 8, 2010. NASDAQ proposes to implement the proposed rule change on October 8, 2010, or, if the Commission does not waive the 30-day waiting period specified in Rule 19b–4(f)(6)(iii),[3] on a date that is 30 days after the date of this filing. The text of the proposed rule change is available at *http://nasdaq.cchwallstreet.com/,* at the Exchange's principal office, and at the Commission's Public Reference Room.

[8] 17 CFR 200.30–3(a)(12).

[1] 15 U.S.C. 78s(b)(1).

[2] 17 CFR 240.19b–4.

[3] 17 CFR 240.19b–4(f)(6)(iii).

II. Self-Regulatory Organization's Statement of the Purpose of, and Statutory Basis for, the Proposed Rule Change

In its filing with the Commission, NASDAQ included statements concerning the purpose of, and basis for, the proposed rule change. The text of these statements may be examined at the places specified in Item III below, and is set forth in Sections A, B, and C below.

A. Self-Regulatory Organization's Statement of the Purpose of, and the Statutory Basis for, the Proposed Rule Change

1. Purpose

NASDAQ is amending Rule 4758, which describes its order routing processes, to modify the existing SAVE routing option. Under the SAVE routing option, a market participant may specify that an order will either (i) route to NASDAQ OMX BX ("BX"), check the NASDAQ book, and then route to other venues on the SAVE System routing table, or (ii) check the NASDAQ book first and then route to destinations on the SAVE System routing table.[4] Under the second option, the applicable routing table includes BX, and as is the case with all market destinations, the placement of BX on the routing table depends on NASDAQ's ongoing assessments of factors such as latency, fill rates, reliability, and cost. If shares remain un-executed after routing, they are posted to the NASDAQ book and do not route out again. All routing complies with the requirements of Rule 611 of Regulation NMS. Under Rule 7018, NASDAQ passes through, without modification, applicable BX fees or rebates. In the case of BX, this means that NASDAQ passes through the $0.0001 per share executed credit paid by BX to market participants when accessing liquidity. Thus, the routing strategy provides market participants with the option of routing to a venue with a negative execution cost before accessing liquidity on NASDAQ and other venues. Market participants that wish to access NASDAQ before routing to BX may also use the SAVE strategy, and will receive the same pricing as those that opt to route to BX first, subject to the fact that they are likely to have more shares executed on NASDAQ, at a higher cost, than those that use SAVE to route to BX first.

NASDAQ is amending the SAVE strategy to provide that in circumstances where a market participants [sic] opts to route to BX before checking the NASDAQ book, the order will also route to PSX after BX but before checking NASDAQ. PSX will be charging $0.0013 per share executed to access liquidity, a higher rate than BX, but half the fee charged by NASDAQ itself to access liquidity. Moreover, NASDAQ recently amended Rule 7018 to provide that orders routed to PSX using the SAVE strategy will receive a pass-through of applicable charges. Accordingly, NASDAQ believes that it is appropriate to amend the strategy, to give market participants the option of routing to these two low cost venues before accessing NASDAQ. As is currently the case, however, members will also have option of checking NASDAQ first using the strategy, in which case they will still receive pass through pricing if their orders are subsequently routed to BX or PSX.

2. Statutory Basis

NASDAQ believes that the proposed rule change is consistent with the provisions of Section 6 of the Act,[5] in general, and with Sections 6(b)(5) of the Act,[6] in particular, in that the proposal is designed to prevent fraudulent and manipulative acts and practices, to promote just and equitable principles of trade, to foster cooperation and coordination with persons engaged in regulating, clearing, settling, processing information with respect to, and facilitating transactions in securities, to remove impediments to and perfect the mechanism of a free and open market and a national market system, and, in general, to protect investors and the public interest. The proposed change to modify the SAVE routing will provide market participants with greater flexibility in routing orders to BX and PSX, as low cost trading venues.

[4] Under Rule 4758, the "System routing table" is defined as the proprietary process for determining the specific trading venues to which the NASDAQ System routes orders and the order in which it routes them. The definition reflects the fact that NASDAQ, like other trading venues, maintains different routing tables for different routing options and modifies them on a regular basis to reflect assessments about the destination markets. Such assessments consider factors such as a destination's latency, fill rates, reliability, and cost. Accordingly, the definition specifies that NASDAQ reserves the right to maintain a different routing table for different routing options and to modify routing tables at any time without notice. At present, all System routing tables include NASDAQ OMX BX ("BX"), and it is expected that they will be modified also to include PSX. Thus, all routed orders have the opportunity to route to this venue, with the exception of DOT orders routed directly to the NYSE or NYSE Amex opening or closing processes and directed orders that are directed to route to venues other than BX.

[5] 15 U.S.C. 78f.

[6] 15 U.S.C. 78f(b)(5).

B. Self-Regulatory Organization's Statement on Burden on Competition

The Exchange does not believe that the proposed rule change will result in any burden on competition that is not necessary or appropriate in furtherance of the purposes of the Act, as amended.

C. Self-Regulatory Organization's Statement on Comments on the Proposed Rule Change Received From Members, Participants, or Others

Written comments were neither solicited nor received.

III. Date of Effectiveness of the Proposed Rule Change and Timing for Commission Action

Because the foregoing proposed rule change does not: (i) Significantly affect the protection of investors or the public interest; (ii) impose any significant burden on competition; and (iii) become operative for 30 days from the date on which it was filed, or such shorter time as the Commission may designate, it has become effective pursuant to Section 19(b)(3)(A) of the Act [7] and Rule 19b–4(f)(6) thereunder.[8]

A proposed rule change filed pursuant to Rule 19b–4(f)(6) under the Act [9] normally does not become operative for 30 days after the date of its filing. However, Rule 19b–4(f)(6) permits the Commission to designate a shorter time if such action is consistent with the protection of investors and the public interest. NASDAQ requests that the Commission waive the 30-day operative delay because it currently has the technological changes ready to support the proposed rule change, and believes that the benefits of providing members with an additional option for routing to a new low cost trading venue should not be delayed. The Commission believes that waiving the 30-day operative delay [10] is consistent with the protection of investors and the public interest and designates the proposal operative upon filing.

At any time within 60 days of the filing of the proposed rule change, the Commission summarily may temporarily suspend such rule change if it appears to the Commission that such action is necessary or appropriate in the public interest, for the protection of investors, or otherwise in furtherance of the purposes of the Act. If the Commission takes such action, the Commission shall institute proceedings to determine whether the proposed rule should be approved or disapproved.

IV. Solicitation of Comments

Interested persons are invited to submit written data, views, and arguments concerning the foregoing, including whether the proposed rule change is consistent with the Act. Comments may be submitted by any of the following methods:

Electronic Comments

- Use the Commission's Internet comment form (*http://www.sec.gov/rules/sro.shtml*); or
- Send an e-mail to *rule-comments@sec.gov.* Please include File Number SR–NASDAQ–2010–127 on the subject line.

Paper Comments

- Send paper comments in triplicate to Elizabeth M. Murphy, Secretary, Securities and Exchange Commission, 100 F Street, NE., Washington, DC 20549–1090.

All submissions should refer to File Number SR–NASDAQ–2010–127. This file number should be included on the subject line if e-mail is used. To help the Commission process and review your comments more efficiently, please use only one method. The Commission will post all comments on the Commission's Internet Web site (*http://www.sec.gov/rules/sro.shtml*). Copies of the submission,[11] all subsequent amendments, all written statements with respect to the proposed rule change that are filed with the Commission, and all written communications relating to the proposed rule change between the Commission and any person, other than those that may be withheld from the public in accordance with the provisions of 5 U.S.C. 552, will be available for Web site viewing and printing in the Commission's Public Reference Room, on official business days between the hours of 10 a.m. and 3 p.m. Copies of the filing also will be available for inspection and copying at the principal office of the Exchange. All comments received will be posted without change; the Commission does not edit personal identifying information from submissions. You should submit only information that you wish to make available publicly. All submissions should refer to File Number SR–NASDAQ–2010–127 and should be submitted on or before November 9, 2010.

For the Commission, by the Division of Trading and Markets, pursuant to delegated authority.[12]

Florence E. Harmon,

Deputy Secretary.

[FR Doc. 2010–26245 Filed 10–18–10; 8:45 am]

BILLING CODE 8011–01–P

[7] 15 U.S.C. 78s(b)(3)(A).

[8] 17 CFR 240.19b–4(f)(6). In addition, Rule 19b–4(f)(6) requires a self-regulatory organization to give the Commission written notice of its intent to file the proposed rule change at least five business days prior to the date of filing of the proposed rule change, or such shorter time as designated by the Commission. Nasdaq has satisfied this requirement.

[9] 17 CFR 240.19b–4(f)(6).

[10] For purposes only of waiving the 30-day operative delay, the Commission has considered the proposed rule's impact on efficiency, competition, and capital formation. *See* 15 U.S.C. 78c(f).

[11] The text of the proposed rule change is available on the Commission's Web site at *http://www.sec.gov/rules/sro.shtml.*

[12] 17 CFR 200.30–3(a)(12).

SECURITIES AND EXCHANGE COMMISSION

[Release No. 34–63096; File No. SR–CBOE–2010–077]

Self-Regulatory Organizations; Chicago Board Options Exchange, Incorporated; Order Granting Approval of Proposed Rule Change To List Series With Up to 12 Expiration Months for Broad-Based Security Index Options Upon Which the Exchange Calculates a Volatility Index

October 13, 2010.

I. Introduction

On August 24, 2010, the Chicago Board Options Exchange, Incorporated ("CBOE" or "Exchange") filed with the Securities and Exchange Commission ("Commission"), pursuant to Section 19(b)(1) of the Securities Exchange Act of 1934 ("Act") [1] and Rule 19b–4 thereunder,[2] a proposed rule change to allow the Exchange to list series with up to 12 expiration months for options that overlie broad-based security indexes for which options are used by the Exchange to calculate a volatility index. On September 2, 2010, the Exchange filed Amendment No. 1, which replaced the original filing in its entirety. The proposed rule change, as amended, was published for comment in the **Federal Register** on September 10, 2010.[3] The Commission received no comment letters on the proposal. This order approves the proposed rule change.

II. Description of the Proposal

CBOE has proposed to amend Rule 24.9(a)(2), Terms of Index Options, to allow the Exchange to list series with up to 12 expiration months for broad-based security index options upon which the Exchange calculates a volatility index. Currently, Rule 24.9(a)(2) permits the Exchange to list series with only seven

[1] 15 U.S.C. 78s(b)(1).

[2] 17 CFR 240.19b–4.

[3] Securities Exchange Act Release No. 62847 (September 3, 2010), 75 FR 55383 ("Notice").

expiration months in any index options upon which the Exchange calculates a constant three-month volatility index.

In support of its proposal, CBOE stated that, since 2009, volatility trading has experienced significant growth in trading volume. In order to satisfy growing demand for a wider variety of volatility investment strategies, the Exchange is seeking to increase, from seven to 12, the number of expiration months for broad-based security index options upon which the Exchange calculates a volatility index. In doing so, the Exchange hopes to create flexibility that would enable it to create volatility indexes of varying lengths in response to demand for a wider variety of volatility investment strategies. Accordingly, the Exchange also proposes to delete language from the rule text restricting the volatility index options to indexes on which the Exchange calculates a constant three-month volatility index. The Exchange believes that the additional expirations, which will be listed in monthly intervals over a one-year time frame, will provide the Exchange with the flexibility to create indexes that represent unique volatility exposures, and enable the Exchange to respond quickly to investor demand for new volatility-based products.

CBOE further stated that it has analyzed its capacity and represents that it believes the Exchange and the Options Price Reporting Authority have the necessary systems capacity to handle the additional traffic associated with the ability to list series with up to 12 expiration months for broad-based security index options upon which the Exchange calculates a volatility index.

III. Discussion

The Commission finds that the proposed rule change is consistent with the requirements of the Act and the rules and regulations thereunder applicable to a national securities exchange.[4] Specifically, the Commission finds that the proposal is consistent with Section 6(b)(5) of the Act,[5] which requires, among other things, that the rules of a national securities exchange be designed to promote just and equitable principles of trade, to prevent fraudulent and manipulative acts, to remove impediments to and perfect the mechanism of a free and open market and a national market system, and, in general, to protect investors and the public interest.

The proposal will provide investors with added flexibility in the trading of volatility index options and allow investors to establish options positions that are more precisely tailored to meet their investment objectives. The Commission believes that the proposal strikes a reasonable balance between the Exchange's desire to accommodate market participants by offering a wider array of investment opportunities and the need to avoid unnecessary proliferation of options series and the corresponding increase in quotes. The Commission expects the Exchange to monitor the trading volume associated with the additional options series listed as a result of this proposal and the effect of these additional series on market fragmentation and on the capacity of the Exchange's, OPRA's, and vendors' automated systems.

In addition, the Commission notes that CBOE has represented that it believes the Exchange and the Options Price Reporting Authority have the necessary systems capacity to handle the additional traffic associated with the newly permitted listings.

IV. Conclusion

It is therefore ordered, pursuant to Section 19(b)(2) of the Act,[6] that the proposed rule change (SR–CBOE–2010–077) be, and hereby is, approved.

For the Commission, by the Division of Trading and Markets, pursuant to delegated authority.[7]

Florence E. Harmon,

Deputy Secretary.

[FR Doc. 2010–26279 Filed 10–18–10; 8:45 am]

BILLING CODE 8011–01–P

[4] In approving this proposed rule change, the Commission has considered the proposed rule's impact on efficiency, competition, and capital formation. *See* 15 U.S.C. 78c(f).

[5] 15 U.S.C. 78f(b)(5).

[6] 15 U.S.C. 78s(b)(2).

[7] 17 CFR 200.30–3(a)(12).

SECURITIES AND EXCHANGE COMMISSION

[Release No. 34–63095; File No. SR–MSRB–2010–10]

Self-Regulatory Organizations; Municipal Securities Rulemaking Board; Notice of Filing of Proposed Rule Change Consisting of Amendments to Rule A–13 To Increase Transaction Assessments for Certain Municipal Securities Transactions Reported to the Board and To Institute a New Technology Fee on Reported Sales Transactions

October 13, 2010.

Pursuant to Section 19(b)(1) of the Securities Exchange Act of 1934 ("the Act")[1] and Rule 19b–4 thereunder,[2] notice is hereby given that on September 30, 2010, the Municipal Securities Rulemaking Board ("Board" or "MSRB") filed with the Securities and Exchange Commission ("SEC" or "Commission") the proposed rule change as described in Items I, II and III below, which Items have been prepared by the MSRB. The Commission is publishing this notice to solicit comments on the proposed rule change from interested persons.

I. Self-Regulatory Organization's Statement of the Terms of Substance of the Proposed Rule Change

The MSRB has filed with the Commission a proposed rule change relating to assessments for brokers, dealers, and municipal securities dealers ("dealers") under MSRB Rule A–13. The proposed rule change consists of amendments to Rule A–13 to increase transaction assessments for certain municipal securities transactions reported to the Board and to institute a new technology fee on reported sales transactions. The proposed rule change would amend Rule A–13 to (a) Increase the existing transaction assessments for inter-dealer and customer sales from .0005% to .001% of the total par value of inter-dealer sales and sales to customers that are reported by dealers to the MSRB (the "transaction fee"), and (b) impose a technology fee of $1.00 per transaction for inter-dealer and customer sales reported to the Board (the "technology fee"). The technology fee would be transitional in nature and would be reviewed by the Board periodically to determine whether it should continue to be assessed. The MSRB proposes an effective date for this proposed rule change of January 1, 2011.

The text of the proposed rule change is available on the MSRB's Web site at *http://www.msrb.org/Rules-and-Interpretations/SEC-Filings/2010-Filings.aspx* and at the Commission's Public Reference Room.

II. Self-Regulatory Organization's Statement of the Purpose of, and Statutory Basis for, the Proposed Rule Change

In its filing with the Commission, the MSRB included statements concerning the purpose of and basis for the proposed rule change and discussed any comments it received on the proposed rule change. The text of these statements may be examined at the places specified in Item IV below. The Board has

[1] 15 U.S.C. 78s(b)(1).

[2] 17 CFR 240.19b–4.

prepared summaries, set forth in Sections A, B, and C below, of the most significant aspects of such statements.

A. Self-Regulatory Organization's Statement of the Purpose of, and Statutory Basis for, the Proposed Rule Change

1. Purpose

The purpose of the proposed rule change is to assess reasonable fees necessary to defray the costs and expenses of operating and administering the MSRB. The proposed rule change would amend Rule A–13 to (a) Increase the existing transaction assessments for inter-dealer and customer sales from .0005% to .001% of the total par value of inter-dealer sales and sales to customers that are reported by dealers to the MSRB (the "transaction fee"), and (b) impose a technology fee of $1.00 per transaction for inter-dealer and customer sales reported to the Board (the "technology fee"). The technology fee would be transitional in nature and would be reviewed by the Board periodically to determine whether it should continue to be assessed.

Current Sources of Revenue

The MSRB currently levies four types of fees that are generally applicable to dealers. Rule A–12 provides for a $100 initial fee paid once by a dealer when it first begins to engage in municipal securities activities. Rule A–13 provides for an underwriting fee of $.03 per $1000 par value of municipal securities purchased in a primary offering (with specified exceptions), and a transaction fee of $.005 per $1000 par value of sale transactions of municipal securities (with specified exceptions). Finally, Rule A–14 provides for an annual fee of $500 from each dealer who conducts municipal securities activities.

At present, approximately 90% of the Board's revenue is generated through underwriting fees and transaction fees. In fiscal year 2009, approximately 55% of the Board's revenue was generated by underwriting fees and approximately 36% of its revenue was generated by transaction fees. The underwriting and transaction fees assessed pursuant to Rule A–13 are generally proportionate to a dealer's activity within the industry, as based on the par value amount of underwriting and customer and inter-dealer transactions during the year. Underwriting fees are based on a dealer's participation in the underwriting of municipal securities, and transaction fees are based on a dealer's participation in the municipal securities market in terms of par value sold.

The transaction assessment was last modified in 2000 when the Board commenced assessments on customer sale transactions reported by dealers. The transaction fee has not been increased since that date, despite the additional activities undertaken by the MSRB over the last ten years. The amount of the underwriting assessment has not been increased since 1992, although in December 2009 the MSRB eliminated certain exemptions from the underwriting assessment.

Rationale for Proposed Rule Change

The Board is proposing to increase the transaction fee and establish a new technology fee for three reasons. First, the expenses of the MSRB are increasing and additional revenue is necessary in order to meet projected expenses associated with ongoing operations. Second, the MSRB needs additional revenue to cover anticipated expenses associated with its new regulatory responsibilities mandated by the Dodd-Frank Wall Street Reform and Consumer Protection Act, Public Law 111–203, 124 Stat. 1376 (2010) (the "Dodd-Frank Act"). Third, the MSRB needs additional revenue to replace aging and outdated information technology software and hardware. In particular, funding is needed to ensure the operational integrity of the MSRB's information systems, retire and update computer hardware and software, and conduct ongoing risk management including business continuity activities and system maintenance. The new technology fee would be used to establish a new technology renewal fund, which would be segregated for accounting purposes. The technology renewal fund is intended to fund replacement of aging and outdated technology systems and to fund new technology initiatives.

As reflected in the 2009 audited financial statement, revenue decreased from fiscal year 2008 to 2009 from approximately $22.2 million to approximately $19.6 million, while expenses increased from approximately $18.6 million to approximately $21.3 million. Although revenue has increased in fiscal year 2010, primarily due to the elimination of certain exemptions from underwriting fees, expenses have also continued to increase. Moreover, the MSRB has not set aside separate reserves for major technology systems that will need replacement or upgrades in the near future.

Several factors have contributed to the recent, large increase in operating expenses. First, over the last two years, the MSRB has significantly improved transparency in the municipal securities market by developing and implementing market information transparency systems for the (a) Collection and dissemination of electronic official statements and other primary market documents and information, allowing dealers, in most instances, to discontinue sending paper copies of official statements to new issue customers; (b) collection and dissemination of electronic continuing disclosure documents and related information from issuers and their agents; (c) collection and dissemination of current interest rates and other information on auction rate securities and variable rate demand obligations (the "SHORT" system); (d) production and publication of statistical information on the municipal securities market; and (e) display on a publicly available, user-friendly Web site of the documents and information described above, as well as real-time trade information, which are made continuously available to the general public (the Electronic Municipal Market Access System or "EMMA" Web site).

The EMMA and SHORT systems were initially developed and launched using general revenue and cash reserves. Since inception, significant demand from users of these systems and regulatory requirements established by the SEC have resulted in the development of new functionality, with an attendant rise in development and operating costs. Additionally, the rapid adoption by the marketplace of these systems as key sources for market disclosures, trade prices and interest rate information has resulted in an accelerated investment in resources to support the technology systems.

In addition, Congress recently passed, and the President signed into law, comprehensive financial reform legislation, the Dodd-Frank Act. Effective October 1, 2010, the Dodd-Frank Act expands the MSRB's mission in a number of ways that will require a more substantial commitment of staff and technical resources. The expansion of the MSRB's jurisdiction to include regulation of municipal advisors will require additional rulemaking capabilities. The MSRB will also need to focus additional resources on establishing regulatory protections for municipal entities. The MSRB has also been given additional responsibilities in connection with providing enforcement and examination support to the Commission, the Financial Industry Regulatory Authority ("FINRA") and the Federal bank regulators, and the MSRB has been authorized to develop information systems with other Federal

regulators in furtherance of their missions.

Given the significant resource commitments needed to further develop its information systems, and the additional statutory obligations imposed on the MSRB by the Dodd-Frank Act, the MSRB must generate sufficient revenue to ensure that these systems operate in a continuous, reliable manner while at the same time devoting substantial staff resources to developing an extensive new body of regulatory requirements.

Description of Proposed Rule Change

In order to address the projected revenue shortfall, the MSRB proposes to increase revenue in two ways. First, the MSRB proposes to increase the amount of the transaction fee assessed on the par value of inter-dealer and customer sale transactions reported to the MSRB by dealers under MSRB Rule G–14(b), except for transactions currently exempted from the transaction fee as provided in MSRB Rule A–13(c)(iii), from $.005 per $1000 par value to $.01 per $1000 par value of such sale transactions. Transactions exempted from the transaction fee consist of sale transactions in municipal securities that have a final stated maturity of nine months or less or that, at the time of trade, may be tendered at the option of the holder to an issuer of such securities or its designated agent for redemption or purchase at par value or more at least as frequently as every nine months until maturity, earlier redemption, or purchase by an issuer or its designated agent. This increase in the transaction fee is expected to generate an estimated $7 million in revenue annually.

The second fee proposed by the MSRB would consist of a technology fee assessed at $1.00 per transaction for each sale transaction reported to the MSRB by dealers under MSRB Rule G–14(b). The exemptions from the transaction fee, as described above, would not apply to the technology fee. The technology fee is expected to generate an estimated $10 million in revenue annually, and would be transitional in nature, in that it would be reviewed periodically by the MSRB in relation to the level of funding needed for capital expenditures and to maintain the technology renewal fund. The funds accumulated in the technology renewal fund would be solely dedicated to funding capital expenses for technology investments.

As noted above, the bulk of the MSRB's revenue is derived from the underwriting and transaction fees, which are generally proportionate to a dealer's activity within the industry, as based on the par value amount of underwriting and customer and inter-dealer transactions during the year. The proposed new technology fee would help to establish a more balanced assessment of overall fees paid by dealers since it would be based on a dealer's participation in the market as measured by the total number of inter-dealer and customer sale transactions reported to the MSRB, rather than par value, and therefore would help to more evenly distribute the burden of dealer assessments. The MSRB believes these fees are fair and balanced, based on the activities of regulated market participants.

Finally, with regard to the expansion of the MSRB's regulatory mandate to include regulation of municipal advisors and the protection of municipal entities, the MSRB will continue to review its assessments on the market participants it regulates to ensure that costs of rulemaking are appropriately allocated among the entities it regulates. Although the MSRB recognizes that an appropriate allocation of such regulatory costs may not be feasible during the transition of the MSRB to its broader mission, it expects to revisit the manner in which its activities are funded in the coming years, as appropriate. The MSRB is committed to ensuring that its assessments are balanced based in large measure on the level of activity of all of its regulated entities.

2. Statutory Basis

The MSRB believes that the proposed rule change is consistent with Section 15B(b)(2)(J) of the Act,[3] which requires, in pertinent part, that the MSRB's rules shall:

> Provide that each municipal securities broker and each municipal securities dealer shall pay to the Board such reasonable fees and charges as may be necessary or appropriate to defray the costs and expenses of operating and administering the Board. Such rules shall specify the amount of such fees and charges.

The proposed rule change provides for commercially reasonable fees to partially offset costs associated with operating RTRS[4] and producing and disseminating transaction reports to subscribers.

B. Self-Regulatory Organization's Statement on Burden on Competition

The Board does not believe that the proposed rule change will impose any burden on competition not necessary or appropriate in furtherance of the purposes of the Act since it would apply equally to all market participants that chose to subscribe to the services.[5]

C. Self-Regulatory Organization's Statement on Comments Received on the Proposed Rule Change by Members, Participants, or Others

Written comments were neither solicited nor received on the proposed rule change.

III. Date of Effectiveness of the Proposed Rule Change and Timing for Commission Action

Within 45 days of the date of publication of this notice in the **Federal Register** or within such longer period (i) As the Commission may designate up to 90 days of such date if it finds such longer period to be appropriate and publishes its reasons for so finding or (ii) as to which the self-regulatory organization consents, the Commission will:

(A) By order approve or disapprove such proposed rule change, or

(B) Institute proceedings to determine whether the proposed rule change should be disapproved.

IV. Solicitation of Comments

Interested persons are invited to submit written data, views, and arguments concerning the foregoing, including whether the proposed rule change is consistent with the Act. Comments may be submitted by any of the following methods:

Electronic Comments

- Use the Commission's Internet comment form (*http://www.sec.gov/rules/sro.shtml*); or
- Send an e-mail to *rule-comments@sec.gov.* Please include File Number SR–MSRB–2010–10 on the subject line.

Paper Comments

- Send paper comments in triplicate to Elizabeth M. Murphy, Secretary, Securities and Exchange Commission, 100 F Street, NE., Washington, DC 20549–1090.

All submissions should refer to File Number SR–MSRB–2010–10. This file number should be included on the subject line if e-mail is used. To help the Commission process and review your comments more efficiently, please use only one method. The Commission will post all comments on the Commission's Web site (*http://www.sec.gov/rules/sro.shtml).* Copies of the submission, all

[3] 15 U.S.C. 78o–4(b)(2)(J).

[4] RTRS refers to the MSRB's Real-time Transaction Reporting System.

[5] The Commission notes that this filing does not appear to relate to a subscription service.

subsequent amendments, all written statements with respect to the proposed rule change that are filed with the Commission, and all written communications relating to the proposed rule change between the Commission and any person, other than those that may be withheld from the public in accordance with the provisions of 5 U.S.C. 552, will be available for Web site viewing and printing in the Commission's Public Reference Room, 100 F Street, NE., Washington, DC 20549, on official business days between the hours of 10 a.m. and 3 p.m. Copies of such filing also will be available for inspection and copying at the MSRB's offices. All comments received will be posted without change; the Commission does not edit personal identifying information from submissions. You should submit only information that you wish to make available publicly. All submissions should refer to File Number SR–MSRB–2010–10 and should be submitted on or before November 9, 2010.

For the Commission, by the Division of Trading and Markets, pursuant to delegated authority.[6]

Florence E. Harmon,

Deputy Secretary.

[FR Doc. 2010–26278 Filed 10–18–10; 8:45 am]

BILLING CODE 8011–01–P

SECURITIES AND EXCHANGE COMMISSION

[Release No. 34–63092; File No. SR–NASDAQ–2010–129]

Self-Regulatory Organizations; The NASDAQ Stock Market LLC; Notice of Filing and Immediate Effectiveness of Proposed Rule Change To Extend Fee Pilot Program for NASDAQ Last Sale

October 13, 2010.

Pursuant to Section 19(b)(1) of the Securities Exchange Act of 1934 ("Act"),[1] and Rule 19b–4 thereunder,[2] notice is hereby given that on October 1, 2010, The NASDAQ Stock Market LLC ("NASDAQ") filed with the Securities and Exchange Commission ("Commission") the proposed rule change as described in Items I, II, and III below, which Items have been prepared by the Exchange. The Commission is publishing this notice to solicit comments on the proposed rule change from interested persons.

[6] 17 CFR 200.30–3(a)(12).

[1] 15 U.S.C. 78s(b)(1).

[2] 17 CFR 240.19b–4.

I. Self-Regulatory Organization's Statement of the Terms of Substance of the Proposed Rule Change

NASDAQ is proposing to extend for three months the fee pilot pursuant to which NASDAQ distributes the NASDAQ Last Sale ("NLS") market data products. NLS allows data distributors to have access to real-time market data for a capped fee, enabling those distributors to provide free access to the data to millions of individual investors via the internet and television. Specifically, NASDAQ offers the "NASDAQ Last Sale for NASDAQ" and "NASDAQ Last Sale for NYSE/Amex" data feeds containing last sale activity in US equities within the NASDAQ Market Center and reported to the jointly-operated FINRA/NASDAQ Trade Reporting Facility ("FINRA/NASDAQ TRF"), which is jointly operated by NASDAQ and the Financial Industry Regulatory Authority ("FINRA"). The purpose of this proposal is to extend the existing pilot program for three months, from October 1, 2010 to December 31, 2010.

This pilot program supports the aspiration of Regulation NMS to increase the availability of proprietary data by allowing market forces to determine the amount of proprietary market data information that is made available to the public and at what price. During the pilot period, the program has vastly increased the availability of NASDAQ proprietary market data to individual investors. Based upon data from NLS distributors, NASDAQ believes that since its launch in July 2008, the NLS data has been viewed by over 50,000,000 investors on Web sites operated by Google, Interactive Data, and Dow Jones, among others.

The text of the proposed rule change is below. Proposed new language is underlined; proposed deletions are in brackets.

* * * * *

7039. NASDAQ Last Sale Data Feeds

(a) For a three month pilot period commencing on [July] *October* 1, 2010, NASDAQ shall offer two proprietary data feeds containing real-time last sale information for trades executed on NASDAQ or reported to the NASDAQ/FINRA Trade Reporting Facility.

(1)–(2) No change.

(b)–(c) No change.

* * * * *

II. Self-Regulatory Organization's Statement of the Purpose of, and Statutory Basis for, the Proposed Rule Change

In its filing with the Commission, the self-regulatory organization included statements concerning the purpose of, and basis for, the proposed rule change and discussed any comments it received on the proposed rule change. The text of those statements may be examined at the places specified in Item III below. The Exchange has prepared summaries, set forth in sections A, B, and C below, of the most significant parts of such statements.

A. Self-Regulatory Organization's Statement of the Purpose of, and the Statutory Basis for, the Proposed Rule Change

1. Purpose

Prior to the launch of NLS, public investors that wished to view market data to monitor their portfolios generally had two choices: (1) Pay for real-time market data or (2) use free data that is 15 to 20 minutes delayed. To increase consumer choice, NASDAQ proposed a pilot to offer access to real-time market data to data distributors for a capped fee, enabling those distributors to disseminate the data via the internet and television at no cost to millions of internet users and television viewers. NASDAQ now proposes a three-month extension of that pilot program, subject to the same fee structure as is applicable today.[3]

NLS consists of two separate "Level 1" products containing last sale activity within the NASDAQ market and reported to the jointly-operated FINRA/NASDAQ TRF. First, the "NASDAQ Last Sale for NASDAQ" data product is a real-time data feed that provides real-time last sale information including execution price, volume, and time for executions occurring within the NASDAQ system as well as those reported to the FINRA/NASDAQ TRF. Second, the "NASDAQ Last Sale for

[3] NASDAQ previously stated that it would file a proposed rule change to make the NLS pilot fees permanent. NASDAQ has also informed Commission staff that it is consulting with FINRA to develop a proposed rule change by FINRA to allow inclusion of FINRA/NASDAQ TRF data in NLS on a permanent basis. Because NASDAQ and FINRA are continuing to discuss such a proposed rule change, and notably, are evaluating what effect the decision of the Court of Appeals for the District of Columbia Circuit in *NetCoaliton* v. *SEC,* No. 09–1042 (D.C. Cir. 2010) and recent amendments to Section 19 of the Act may have on a proposal to make the pilot permanent, FINRA and NASDAQ have not completed their consultations regarding such a proposed rule change. Accordingly, NASDAQ is filing to seek a three-month extension of the existing pilot.

NYSE/Amex" data product provides real-time last sale information including execution price, volume, and time for NYSE- and NYSE Amex-securities executions occurring within the NASDAQ system as well as those reported to the FINRA/NASDAQ TRF.

NASDAQ established two different pricing models, one for clients that are able to maintain username/password entitlement systems and/or quote counting mechanisms to account for usage, and a second for those that are not. Firms with the ability to maintain username/password entitlement systems and/or quote counting mechanisms are eligible for a specified fee schedule for the NASDAQ Last Sale for NASDAQ Product and a separate fee schedule for the NASDAQ Last Sale for NYSE/Amex Product. Firms that are unable to maintain username/password entitlement systems and/or quote counting mechanisms also have multiple options for purchasing the NASDAQ Last Sale data. These firms choose between a "Unique Visitor" model for internet delivery or a "Household" model for television delivery. Unique Visitor and Household populations must be reported monthly and must be validated by a third-party vendor or ratings agency approved by NASDAQ at NASDAQ's sole discretion. In addition, to reflect the growing confluence between these media outlets, NASDAQ offered a reduction in fees when a single distributor distributes NASDAQ Last Sale Data Products via multiple distribution mechanisms.

Second, NASDAQ established a cap on the monthly fee, currently set at $50,000 per month for all NASDAQ Last Sale products. The fee cap enables NASDAQ to compete effectively against other exchanges that also offer last sale data for purchase or at no charge.

As with the distribution of other NASDAQ proprietary products, all distributors of the NASDAQ Last Sale for NASDAQ and/or NASDAQ Last Sale for NYSE/Amex products pay a single $1,500/month NASDAQ Last Sale Distributor Fee in addition to any applicable usage fees. The $1,500 monthly fee applies to all distributors and does not vary based on whether the distributor distributes the data internally or externally or distributes the data via both the internet and television.

2. Statutory Basis

NASDAQ believes that the proposed rule change is consistent with the provisions of Section 6 of the Act,[4] in general, and with Section 6(b)(4) of the Act,[5] in particular, in that it provides an equitable allocation of reasonable fees among users and recipients of the data. In adopting Regulation NMS, the Commission granted self-regulatory organizations and broker-dealers increased authority and flexibility to offer new and unique market data to the public. It was believed that this authority would expand the amount of data available to consumers, and also spur innovation and competition for the provision of market data.

NASDAQ believes that its NASDAQ Last Sale market data products are precisely the sort of market data product that the Commission envisioned when it adopted Regulation NMS. The Commission concluded that Regulation NMS—by lessening regulation of the market in proprietary data—would itself further the Act's goals of facilitating efficiency and competition:

> [E]fficiency is promoted when broker-dealers who do not need the data beyond the prices, sizes, market center identifications of the NBBO and consolidated last sale information are not required to receive (and pay for) such data. The Commission also believes that efficiency is promoted when broker-dealers may choose to receive (and pay for) additional market data based on their own internal analysis of the need for such data.[6]

By removing "unnecessary regulatory restrictions" on the ability of exchanges to sell their own data, Regulation NMS advanced the goals of the Act and the principles reflected in its legislative history. If the free market should determine whether proprietary data is sold to broker-dealers at all, it follows that the price at which such data is sold should be set by the market as well.

On July 21, 2010, President Barak Obama signed into law H.R. 4173, the Dodd-Frank Wall Street Reform and Consumer Protection Act of 2010 ("Dodd-Frank Act"), which amended Section 19 of the Act. Among other things, Section 916 of the Dodd-Frank Act amended paragraph (A) of Section 19(b)(3) of the Act by inserting the phrase "on any person, whether or not the person is a member of the self-regulatory organization" after "due, fee or other charge imposed by the self-regulatory organization." As a result, all SRO rule proposals establishing or changing dues, fees, or other charges are immediately effective upon filing regardless of whether such dues, fees, or other charges are imposed on members of the SRO, non-members, or both. Section 916 further amended paragraph (C) of Section 19(b)(3) of the Exchange Act to read, in pertinent part, "At any time within the 60-day period beginning on the date of filing of such a proposed rule change in accordance with the provisions of paragraph (1) [of Section 19(b)], the Commission summarily may temporarily suspend the change in the rules of the self-regulatory organization made thereby, if it appears to the Commission that such action is necessary or appropriate in the public interest, for the protection of investors, or otherwise in furtherance of the purposes of this title. If the Commission takes such action, the Commission shall institute proceedings under paragraph (2)(B) [of Section 19(b)] to determine whether the proposed rule should be approved or disapproved."

NASDAQ believes that these amendments to Section 19 of the Act reflect Congress's intent to allow the Commission to rely upon the forces of competition to ensure that fees for market data are reasonable and equitably allocated. Although Section 19(b) had formerly authorized immediate effectiveness for a "due, fee or other charge imposed by the self-regulatory organization," the Commission adopted a policy and subsequently a rule stipulating that fees for data and other products available to persons that are not members of the self-regulatory organization must be approved by the Commission after first being published for comment. At the time, the Commission supported the adoption of the policy and the rule by pointing out that unlike members, whose representation in self-regulatory organization governance was mandated by the Act, non-members should be given the opportunity to comment on fees before being required to pay them, and that the Commission should specifically approve all such fees. NASDAQ believes that the amendment to Section 19 reflects Congress's conclusion that the evolution of self-regulatory organization governance and competitive market structure have rendered the Commission's prior policy on non-member fees obsolete. Specifically, many exchanges have evolved from member-owned not-for-profit corporations into for-profit investor-owned corporations (or subsidiaries of investor-owned corporations). Accordingly, exchanges no longer have narrow incentives to manage their affairs for the exclusive benefit of their members, but rather have incentives to maximize the appeal of their products to all customers, whether members or non-members, so as to broaden distribution and grow

[4] 15 U.S.C. 78f.

[5] 15 U.S.C. 78f(b)(4).

[6] Securities Exchange Act Release No. 51808 (June 9, 2005), 70 FR 37496 (June 29, 2005).

revenues. Moreover, we believe that the change also reflects an endorsement of the Commission's determinations that reliance on competitive markets is an appropriate means to ensure equitable and reasonable prices. Simply put, the change reflects a presumption that all fee changes should be permitted to take effect immediately, since the level of all fees are constrained by competitive forces.

The recent decision of the United States Court of Appeals for the District of Columbia Circuit in *NetCoaliton* v. *SEC,* No. 09–1042 (D.C. Cir. 2010), although reviewing a Commission decision made prior to the effective date of the Dodd-Frank Act, upheld the Commission's reliance upon competitive markets to set reasonable and equitably allocated fees for market data. "In fact, the legislative history indicates that the Congress intended that the market system 'evolve through the interplay of competitive forces as unnecessary regulatory restrictions are removed' and that the SEC wield its regulatory power 'in those situations where competition may not be sufficient,' such as in the creation of a 'consolidated transactional reporting system.' *NetCoaltion,* at 15 (quoting H.R. Rep. No. 94–229, at 92 (1975), *as reprinted in* 1975 U.S.C.C.A.N. 321, 323). The court's conclusions about Congressional intent are therefore reinforced by the Dodd-Frank Act amendments, which create a presumption that exchange fees, including market data fees, may take effect immediately, without prior Commission approval, and that the Commission should take action to suspend a fee change and institute a proceeding to determine whether the fee change should be approved or disapproved only where the Commission has concerns that the change may not be consistent with the Act.

B. Self-Regulatory Organization's Statement on Burden on Competition

NASDAQ does not believe that the proposed rule change will result in any burden on competition that is not necessary or appropriate in furtherance of the purposes of the Act, as amended. Notwithstanding its determination that the Commission may rely upon competition to establish fair and equitably allocated fees for market data, the *NetCoaltion* court found that the Commission had not, in that case, compiled a record that adequately supported its conclusion that the market for the data at issue in the case was competitive. For the reasons discussed above, NASDAQ believes that the Dodd-Frank Act amendments to Section 19 materially alter the scope of the Commission's review of future market data filings, by creating a presumption that all fees may take effect immediately, without prior analysis by the Commission of the competitive environment. Even in the absence of this important statutory change, however, NASDAQ believes that a record may readily be established to demonstrate the competitive nature of the market in question.

Specifically, NASDAQ's ability to price its Last Sale Data Products is constrained by (1) Competition between exchanges and other trading platforms that compete with each other in a variety of dimensions; (2) the existence of inexpensive real-time consolidated data and free delayed consolidated data; and (3) the inherent contestability of the market for proprietary last sale data.

The market for proprietary last sale data products is currently competitive and inherently contestable because there is fierce competition for the inputs necessary to the creation of proprietary data and strict pricing discipline for the proprietary products themselves. Numerous exchanges compete with each other for listings, trades, and market data itself, providing virtually limitless opportunities for entrepreneurs who wish to produce and distribute their own market data. This proprietary data is produced by each individual exchange, as well as other entities, in a vigorously competitive market.

Transaction execution and proprietary data products are complementary in that market data is both an input and a byproduct of the execution service. In fact, market data and trade execution are a paradigmatic example of joint products with joint costs. The decision whether and on which platform to post an order will depend on the attributes of the platform where the order can be posted, including the execution fees, data quality and price and distribution of its data products. Without the prospect of a taking order seeing and reacting to a posted order on a particular platform, the posting of the order would accomplish little. Without trade executions, exchange data products cannot exist. Data products are valuable to many end users only insofar as they provide information that end users expect will assist them or their customers in making trading decisions.

The costs of producing market data include not only the costs of the data distribution infrastructure, but also the costs of designing, maintaining, and operating the exchange's transaction execution platform and the cost of regulating the exchange to ensure its fair operation and maintain investor confidence. The total return that a trading platform earns reflects the revenues it receives from both products and the joint costs it incurs. Moreover, an exchange's broker-dealer customers view the costs of transaction executions and of data as a unified cost of doing business with the exchange. A broker-dealer will direct orders to a particular exchange only if the expected revenues from executing trades on the exchange exceed net transaction execution costs and the cost of data that the broker-dealer chooses to buy to support its trading decisions (or those of its customers). The choice of data products is, in turn, a product of the value of the products in making profitable trading decisions. If the cost of the product exceeds its expected value, the broker-dealer will choose not to buy it. Moreover, as a broker-dealer chooses to direct fewer orders to a particular exchange, the value of the product to that broker-dealer decreases, for two reasons. First, the product will contain less information, because executions of the broker-dealer's orders will not be reflected in it. Second, and perhaps more important, the product will be less valuable to that broker-dealer because it does not provide information about the venue to which it is directing its orders. Data from the competing venue to which the broker-dealer is directing orders will become correspondingly more valuable.

Similarly, in the case of products such as NLS that are distributed through market data vendors, the vendors provide price discipline for proprietary data products because they control the primary means of access to end users. Vendors impose price restraints based upon their business models. For example, vendors such as Bloomberg and Reuters that assess a surcharge on data they sell may refuse to offer proprietary products that end users will not purchase in sufficient numbers. Internet portals, such as Google, impose a discipline by providing only data that will enable them to attract "eyeballs" that contribute to their advertising revenue. Retail broker-dealers, such as Schwab and Fidelity, offer their customers proprietary data only if it promotes trading and generates sufficient commission revenue. Although the business models may differ, these vendors' pricing discipline is the same: They can simply refuse to purchase any proprietary data product that fails to provide sufficient value. NASDAQ and other producers of proprietary data products must understand and respond to these

varying business models and pricing disciplines in order to market proprietary data products successfully. Moreover, NASDAQ believes that products such as NLS can enhance order flow to NASDAQ by providing more widespread distribution of information about transactions in real time, thereby encouraging wider participation in the market by investors with access to the internet or television. Conversely, the value of such products to distributors and investors decreases if order flow falls, because the products contain less content.

Analyzing the cost of market data distribution in isolation from the cost of all of the inputs supporting the creation of market data will inevitably underestimate the cost of the data. Thus, because it is impossible to create data without a fast, technologically robust, and well-regulated execution system, system costs and regulatory costs affect the price of market data. It would be equally misleading, however, to attribute all of the exchange's costs to the market data portion of an exchange's joint product. Rather, all of the exchange's costs are incurred for the unified purposes of attracting order flow, executing and/or routing orders, and generating and selling data about market activity. The total return that an exchange earns reflects the revenues it receives from the joint products and the total costs of the joint products.

Competition among trading platforms can be expected to constrain the aggregate return each platform earns from the sale of its joint products, but different platforms may choose from a range of possible, and equally reasonable, pricing strategies as the means of recovering total costs. For example, some platform may choose to pay rebates to attract orders, charge relatively low prices for market information (or provide information free of charge) and charge relatively high prices for accessing posted liquidity. Other platforms may choose a strategy of paying lower rebates (or no rebates) to attract orders, setting relatively high prices for market information, and setting relatively low prices for accessing posted liquidity. In this environment, there is no economic basis for regulating maximum prices for one of the joint products in an industry in which suppliers face competitive constraints with regard to the joint offering. This would be akin to strictly regulating the price that an automobile manufacturer can charge for car sound systems despite the existence of a highly competitive market for cars and the availability of after-market alternatives to the manufacturer-supplied system.

The level of competition and contestability in the market is evident in the numerous alternative venues that compete for order flow, including ten self-regulatory organization ("SRO") markets, as well as internalizing broker-dealers ("BDs") and various forms of alternative trading systems ("ATSs"), including dark pools and electronic communication networks ("ECNs"). Each SRO market competes to produce transaction reports via trade executions, and two FINRA-regulated Trade Reporting Facilities ("TRFs") compete to attract internalized transaction reports. It is common for BDs to further and exploit this competition by sending their order flow and transaction reports to multiple markets, rather than providing them all to a single market. Competitive markets for order flow, executions, and transaction reports provide pricing discipline for the inputs of proprietary data products.

The large number of SROs, TRFs, BDs, and ATSs that currently produce proprietary data or are currently capable of producing it provides further pricing discipline for proprietary data products. Each SRO, TRF, ATS, and BD is currently permitted to produce proprietary data products, and many currently do or have announced plans to do so, including NASDAQ, NYSE, NYSE Amex, NYSEArca, and BATS.

Any ATS or BD can combine with any other ATS, BD, or multiple ATSs or BDs to produce joint proprietary data products. Additionally, order routers and market data vendors can facilitate single or multiple broker-dealers' production of proprietary data products. The potential sources of proprietary products are virtually limitless.

The fact that proprietary data from ATSs, BDs, and vendors can by-pass SROs is significant in two respects. First, non-SROs can compete directly with SROs for the production and sale of proprietary data products, as BATS and Arca did before registering as exchanges by publishing proprietary book data on the Internet. Second, because a single order or transaction report can appear in an SRO proprietary product, a non-SRO proprietary product, or both, the data available in proprietary products is exponentially greater than the actual number of orders and transaction reports that exist in the marketplace.

In addition to the competition and price discipline described above, the market for proprietary data products is also highly contestable because market entry is rapid, inexpensive, and profitable. The history of electronic trading is replete with examples of entrants that swiftly grew into some of the largest electronic trading platforms and proprietary data producers: Archipelago, Bloomberg Tradebook, Island, RediBook, Attain, TracECN, BATS Trading and Direct Edge. Today, BATS publishes its data at no charge on its Web site in order to attract order flow, and it uses market data revenue rebates from the resulting executions to maintain low execution charges for its users. A proliferation of dark pools and other ATSs operate profitably with fragmentary shares of consolidated market volume.

Regulation NMS, by deregulating the market for proprietary data, has increased the contestability of that market. While broker-dealers have previously published their proprietary data individually, Regulation NMS encourages market data vendors and broker-dealers to produce proprietary products cooperatively in a manner never before possible. Multiple market data vendors already have the capability to aggregate data and disseminate it on a profitable scale, including Bloomberg, Reuters and Thomson.

The competitive nature of the market for products such as NLS is borne out by the performance of the market. In May 2008, the internet portal Yahoo! began offering its Web site viewers real-time last sale data provided by BATS Trading. NLS competes directly with the BATS product that is still disseminated via Yahoo! The New York Stock Exchange also distributes competing last sale data products at a price comparable to the price of NLS. Under the regime of Regulation NMS, there is no limit to the number of competing products that can be developed quickly and at low cost.

Moreover, consolidated data provides two additional measures of pricing discipline for proprietary data products that are a subset of the consolidated data stream. First, the consolidated data is widely available in real-time at $1 per month for non-professional users. Second, consolidated data is also available *at no cost* with a 15- or 20-minute delay. Because consolidated data contains marketwide information, it effectively places a cap on the fees assessed for proprietary data (such as last sale data) that is simply a subset of the consolidated data. The mere availability of low-cost or free consolidated data provides a powerful form of pricing discipline for proprietary data products that contain data elements that are a subset of the consolidated data, by highlighting the optional nature of proprietary products.

In this environment, a super-competitive increase in the fees charged for either transactions or data has the

potential to impair revenues from both products. "No one disputes that competition for order flow is 'fierce'." *NetCoalition* at 24. However, the existence of fierce competition for order flow implies a high degree of price sensitivity on the part of broker-dealers with order flow, since they may readily reduce costs by directing orders toward the lowest-cost trading venues. A broker-dealer that shifted its order flow from one platform to another in response to order execution price differentials would both reduce the value of that platform's market data and reduce its own need to consume data from the disfavored platform. If a platform increases its market data fees, the change will affect the overall cost of doing business with the platform, and affected broker-dealers will assess whether they can lower their trading costs by directing orders elsewhere and thereby lessening the need for the more expensive data. Similarly, increases in the cost of NLS would impair the willingness of distributors to take a product for which there are numerous alternatives, impacting NLS data revenues, the value of NLS as a tool for attracting order flow, and ultimately, the volume of orders routed to NASDAQ and the value of its other data products.

In establishing the price for the NASDAQ Last Sale Products, NASDAQ considered the competitiveness of the market for last sale data and all of the implications of that competition. NASDAQ believes that it has considered all relevant factors and has not considered irrelevant factors in order to establish a fair, reasonable, and not unreasonably discriminatory fees and an equitable allocation of fees among all users. The existence of numerous alternatives to NLS, including real-time consolidated data, free delayed consolidated data, and proprietary data from other sources ensures that NASDAQ cannot set unreasonable fees, or fees that are unreasonably discriminatory, without losing business to these alternatives. Accordingly, NASDAQ believes that the acceptance of the NLS product in the marketplace demonstrates the consistency of these fees with applicable statutory standards.

C. Self-Regulatory Organization's Statement on Comments on the Proposed Rule Change Received From Members, Participants, or Others

Three comment letters were filed regarding the proposed rule change as originally published for comment NASDAQ responded to these comments in a letter dated December 13, 2007. Both the comment letters and NASDAQ's response are available on the SEC Web site at *http://www.sec.gov/comments/sr-nasdaq-2006–060/nasdaq2006060.shtml.*

III. Date of Effectiveness of the Proposed Rule Change and Timing for Commission Action

The foregoing rule change has become effective pursuant to Section 19(b)(3)(A)(ii) of the Act.[7] At any time within 60 days of the filing of the proposed rule change, the Commission summarily may temporarily suspend such rule change if it appears to the Commission that such action is necessary or appropriate in the public interest, for the protection of investors, or otherwise in furtherance of the purposes of the Act. If the Commission takes such action, the Commission shall institute proceedings to determine whether the proposed rule should be approved or disapproved.

IV. Solicitation of Comments

Interested persons are invited to submit written data, views, and arguments concerning the foregoing, including whether the proposed rule change is consistent with the Act. Comments may be submitted by any of the following methods:

Electronic Comments

- Use the Commission's Internet comment form (*http://www.sec.gov/rules/sro.shtml*); or
- Send an e-mail to *rule-comments@sec.gov.* Please include File Number SR–NASDAQ–2010–129 on the subject line.

Paper Comments

- Send paper comments in triplicate to Elizabeth M. Murphy, Secretary, Securities and Exchange Commission, 100 F Street, NE., Washington, DC 20549–1090.

All submissions should refer to File Number SR–NASDAQ–2010–129. This file number should be included on the subject line if e-mail is used. To help the Commission process and review your comments more efficiently, please use only one method. The Commission will post all comments on the Commission's Internet Web site (*http://www.sec.gov/rules/sro.shtml*). Copies of the submission, all subsequent amendments, all written statements with respect to the proposed rule change that are filed with the Commission, and all written communications relating to the proposed rule change between the Commission and any person, other than those that may be withheld from the public in accordance with the provisions of 5 U.S.C. 552, will be available for Web site viewing and printing in the Commission's Public Reference Room, on official business days between the hours of 10 a.m. and 3 p.m. Copies of the filing also will be available for inspection and copying at the principal office of the Exchange. All comments received will be posted without change; the Commission does not edit personal identifying information from submissions. You should submit only information that you wish to make available publicly. All submissions should refer to File Number SR–NASDAQ–2010–129 and should be submitted on or before November 9, 2010.

For the Commission, by the Division of Trading and Markets, pursuant to delegated authority.[8]

Florence E. Harmon,

Deputy Secretary.

[FR Doc. 2010–26246 Filed 10–18–10; 8:45 am]

BILLING CODE 8011–01–P

[7] 15 U.S.C. 78s(b)(3)(a)(ii).

[8] 17 CFR 200.30–3(a)(12).

SECURITIES AND EXCHANGE COMMISSION

[Release No. 34–63084; File No. SR–NASDAQ–2010–125]

Self-Regulatory Organizations; The NASDAQ Stock Market LLC; Notice of Filing and Immediate Effectiveness of Proposed Rule Change To Revise an Optional Depth Data Enterprise License Fee for Broker-Dealer Distribution of Depth-of-Book Data

October 13, 2010.

Pursuant to Section 19(b)(1) of the Securities Exchange Act of 1934 (the "Act")[1] and Rule 19b–4 thereunder,[2] notice is hereby given that on September 30, 2010, The NASDAQ Stock Market LLC ("NASDAQ" or the "Exchange") filed with the Securities and Exchange Commission (the "Commission") the proposed rule change as described in Items I, II, and III below, which Items have been prepared by the Exchange. The Commission is publishing this notice to solicit comments on the proposed rule change from interested persons.

I. Self-Regulatory Organization's Statement of the Terms of Substance of the Proposed Rule Change

NASDAQ proposes to revise an optional Depth Data Enterprise License Fee for broker-dealer distribution of depth-of-book data to non-professional

[1] 15 U.S.C. 78s(b)(1).

[2] 17 CFR 240.19b–4.

users with which the firm has a brokerage relationship.

The text of the proposed rule change is below. Proposed new language is in *italics;* proposed deletions are in [brackets].[3]

* * * * *

7023. NASDAQ TotalView

(a) TotalView Entitlement

The TotalView entitlement allows a subscriber to see all individual NASDAQ Market Center participant orders and quotes displayed in the system as well as the aggregate size of such orders and quotes at each price level in the execution functionality of the NASDAQ Market Center, including the NQDS feed.

(1)

(A)–(D) No change.

(E) *For a pilot period ending December 31, 2010,* [As] *as* an alternative to (a)(1)(A), (B), and (C), a broker-dealer distributor may purchase an enterprise license at a rate of *$325,000* [$300,000] for non-professional subscribers. The enterprise license entitles a distributor to provide NQDS (as set forth in Rule 7017), TotalView and OpenView to an unlimited number of [internal users, whether such users receive the data directly or through third-party vendors, and external] *non-professional* [user] *subscribers* with whom the firm has a brokerage relationship. The enterprise license shall not apply to relevant Level 1 fees. *The enterprise license shall not apply to Depth Distributor Fees.*

(2) 30-Day Free-Trial Offer. NASDAQ shall offer all new individual subscribers and potential new individual subscribers a 30-day waiver of the user fees for TotalView. This waiver shall not include the incremental fees assessed for the NQDS-only service, which are $30 for professional users and $9 for non-professional users per month. This fee waiver period shall be applied on a rolling basis, determined by the date on which a new individual subscriber or potential individual subscriber is first entitled by a distributor to receive access to TotalView. A distributor may only provide this waiver to a specific individual subscriber once.

For the period of the offer, the TotalView fee of $40 per professional user and $5 per non-professional user per month shall be waived.

(b) No change.

(c) No change.

(d) No change.

* * * * *

II. Self-Regulatory Organization's Statement of the Purpose of, and Statutory Basis for, the Proposed Rule Change

In its filing with the Commission, NASDAQ included statements concerning the purpose of, and basis for, the proposed rule change. The text of these statements may be examined at the places specified in Item III below, and is set forth in Sections A, B, and C below.

A. Self-Regulatory Organization's Statement of the Purpose of, and the Statutory Basis for, the Proposed Rule Change

1. Purpose

Current Proposal. Effective September 1, 2010, NASDAQ began offering a voluntary Enterprise License for non-professional usage of the National Quotation Dissemination Service or NQDS (Rule 7017) and TotalView and OpenView, (Rule 7023) (collectively, "NASDAQ Depth Data").[4] The Depth Data Enterprise License is available only to broker-dealers registered under the Securities Exchange Act of 1934, and it covers all non-professional usage fees to customers with whom the firm has a brokerage relationship with an allowance to distribute data to external professional subscribers with which the firm has a brokerage relationship. This Depth Data Enterprise License Fee includes non-professional usage fees, but does not include distributor fees.

NASDAQ is amending the Depth Data Enterprise License in four ways: (1) Establishing the Enterprise License as a pilot program that will automatically sunset on December 31, 2010; (2) confirming that the program applies to non-professional users and eliminating confusing reference to internal users; (3) changing the fee from $300,000 to $325,000 per month to reflect the fact that the new Depth Data Enterprise License includes all of the data already available in the pre-existing non-professional enterprise license set forth in NASDAQ Rule 7023(a)(1)(C) at a cost of $25,000 per month; and (4) confirming in rule language that the Depth Data Enterprise License Fee does not include distributor fees applicable to distribution of the underlying depth-of-book products.

Background. NASDAQ disseminates market data feeds in two capacities. First, NASDAQ disseminates consolidated or "core" data in its capacity as Securities Information Processor ("SIP") for the national market system plan governing securities listed on NASDAQ as a national securities exchange ("NASDAQ UTP Plan").[5] Second, NASDAQ separately disseminates proprietary or "non-core" data in its capacity as a registered national securities exchange. Non-core data is any data generated by the NASDAQ Market Center Execution System that is voluntarily disseminated by NASDAQ separate and apart from the consolidated data.[6] NASDAQ has numerous proprietary data products, such as NASDAQ TotalView, NASDAQ Last Sale, and NASDAQ Basic.

NASDAQ continues to seek broader distribution of non-core data and to reduce the cost of providing non-core data to larger numbers of investors. In the past, NASDAQ has accomplished this goal in part by offering similar enterprise licenses for professional and non-professional usage of TotalView which contains the full depth of book data for the NASDAQ Market Center Execution System. NASDAQ believes that the adoption of enterprise licenses has led to greater distribution of market data, particularly among non-professional users.

Based on input from market participants, NASDAQ believes that this increase in distribution is attributable in part to the relief it provides distributors from the NASDAQ requirement that distributors count and report each non-professional user of NASDAQ proprietary data. In addition to increased administrative flexibility, enterprise licenses also encourage broader distribution by firms that are currently over the fee cap as well as those that are approaching the cap and wish to take advantage of the benefits of the program. Further, NASDAQ believes that capping fees in this manner creates goodwill with broker-dealers and increases transparency for retail investors.

Accordingly, effective September 1, 2010, NASDAQ established the Depth Data Enterprise License Fee under NASDAQ Rule 7023(a)(1)(E), an optional non-professional enterprise license for distributors of any NASDQ depth-of-book data product including the National Quotation Dissemination Service or NQDS (Rule 7017) and TotalView and OpenView, (Rule 7023) (collectively, "NASDAQ Depth Data"). This Depth Data Enterprise License Fee includes non-professional usage fees,

[3] Changes are marked to the rules of The NASDAQ Stock Market LLC found at *http://nasdaqomx.cchwallstreet.com.*

[4] *See* Securities Exchange Act Release No. 62908 (Sept. 14, 2010); 75 FR 57321 (Sept. 20, 20101 [sic]) (SR–NASDAQ–2010–111).

[5] *See* Securities Exchange Act Release No. 59039 (Dec. 2, 2008) [sic] at p. 41.

[6] *Id.*

but does not include distributor fees.[7] This program is available only to broker-dealers registered under the Securities Exchange Act of 1934, and would cover all non professional usage fees to customers with whom the firm has a brokerage relationship with an allowance to distribute data to external professional subscribers with which the firm has a brokerage relationship. Non-broker-dealer vendors and application service providers would not be eligible for the enterprise license; such firms typically pass through the cost of market data user fees to their customers.[8]

The Depth Data Enterprise License Fee covers usage fees for NASDAQ Depth Data received directly from NASDAQ as well as data received from third-party vendors (e.g., Bloomberg, Thomson-Reuters, etc.). Upon joining the program, firms may inform third-party market data vendors they utilize (through a NASDAQ -provided form) that, going forward, depth data usage by the broker-dealer may be reported to NASDAQ on a non-billable basis. Such a structure attempts to address a long-standing concern that broker-dealers are over-billed for market data consumed by one person through multiple market-data display devices. At the same time, the proposed billing structure will continue to provide NASDAQ with accurate reporting information for purposes of usage monitoring and auditing.

Rationale for Current Proposal. Effective October 1, 2010, NASDAQ is modifying the rule language governing the new Depth Data Enterprise License in four ways. First, NASDAQ is establishing the program as a pilot and setting the sunset date at December 31, 2010. This change signals to market participants that the program is experimental and that NASDAQ may choose not to continue the program at its discretion. Second, NASDAQ is clarifying that the new Depth Data Enterprise License is available for distribution to non-professionals with whom the distributor has a brokerage relationship. The scope of the prior language appeared ambiguous to some market participants due to the use of the term "internal users" in the original rule language.

Third, NASDAQ is changing the price of the new program from $300,000 to $325,000. This change recognizes that NASDAQ now offers distributors enterprise distinct non-professional enterprise licenses, one for non-professional use of TotalView and OpenView under Rule 7023(a)(1)(C) and the new Depth Data Enterprise License Fee under Rule 7023(a)(1)(E) which includes non-professional usage of TotalView, OpenView and NQDS. Effectively, the new Depth Data Enterprise License establishes a fee of $300,000 per month for NQDS.

Fourth, NASDAQ is confirming in rule language that the Depth Data Enterprise License Fee does not include distributor fees applicable to distribution of the underlying depth-of-book products. NASDAQ included this description in the purpose section of the original proposal. NASDAQ has been asked and has agreed to include that language in Rule 7023(a)(1)(E).

The proposed Depth Data Enterprise License Fee remains completely optional and does not replace existing enterprise license fee alternatives set forth in Rule 7023. Additionally, the proposal does not impact individual usage fees for any product or in any way raise the costs of any user of any NASDAQ data product. To the contrary, it provides broker-dealers with an additional approach to providing more NASDAQ data at a lower cost.

2. Statutory Basis

NASDAQ believes that the proposed rule change is consistent with the provisions of Section 6 of the Act,[9] in general, and with Section 6(b)(4) of the Act,[10] in particular, in that it provides an equitable allocation of reasonable fees among users and recipients of NASDAQ data. In adopting Regulation NMS, the Commission granted self-regulatory organizations and broker-dealers increased authority and flexibility to offer new and unique market data to the public. It was believed that this authority would expand the amount of data available to consumers, and also spur innovation and competition for the provision of market data.

The Commission concluded that Regulation NMS—by deregulating the market in proprietary data—would itself further the Act's goals of facilitating efficiency and competition:

> [E]fficiency is promoted when broker-dealers who do not need the data beyond the prices, sizes, market center identifications of the NBBO and consolidated last sale information are not required to receive (and pay for) such data. The Commission also believes that efficiency is promoted when broker-dealers may choose to receive (and pay for) additional market data based on their own internal analysis of the need for such data.[11]

By removing "unnecessary regulatory restrictions" on the ability of exchanges to sell their own data, Regulation NMS advanced the goals of the Act and the principles reflected in its legislative history. If the free market should determine whether proprietary data is sold to broker-dealers at all, it follows that the price at which such data is sold should be set by the market as well. NQDS, TotalView and OpenView are precisely the sort of market data product that the Commission envisioned when it adopted Regulation NMS.

On July 21, 2010, President Barak Obama signed into law H.R. 4173, the Dodd-Frank Wall Street Reform and Consumer Protection Act of 2010 ("Dodd-Frank Act"), which amended Section 19 of the Act. Among other things, Section 916 of the Dodd-Frank Act amended paragraph (A) of Section 19(b)(3) of the Act by inserting the phrase "on any person, whether or not the person is a member of the self-regulatory organization" after "due, fee or other charge imposed by the self-regulatory organization." As a result, all SRO rule proposals establishing or changing dues, fees, or other charges are immediately effective upon filing regardless of whether such dues, fees, or other charges are imposed on members of the SRO, non-members, or both. Section 916 further amended paragraph (C) of Section 19(b)(3) of the Exchange Act to read, in pertinent part, "At any time within the 60-day period beginning on the date of filing of such a proposed rule change in accordance with the provisions of paragraph (1) [of Section 19(b)], the Commission summarily may temporarily suspend the change in the rules of the self-regulatory organization made thereby, if it appears to the Commission that such action is necessary or appropriate in the public interest, for the protection of investors, or otherwise in furtherance of the purposes of this title. If the Commission takes such action, the Commission shall institute proceedings under paragraph (2)(B) [of Section 19(b)] to determine whether the proposed rule should be approved or disapproved."

NASDAQ believes that these amendments to Section 19 of the Act reflect Congress's intent to allow the Commission to rely upon the forces of

[7] Distributors who utilize the enterprise license would still be liable for the applicable distributor fees.

[8] NASDAQ relies on distributor self-reporting of usage rather than on individual contact with each end-user customer. NASDAQ permits distributors to designate an entire user population as "non-professional" provided that the number of professional subscribers within that user population does not exceed ten percent (10%) of the total population.

[9] 15 U.S.C. 78f.

[10] 15 U.S.C. 78f(b)(4).

[11] Securities Exchange Act Release No. 51808 (June 9, 2005), 70 FR 37496 (June 29, 2005).

competition to ensure that fees for market data are reasonable and equitably allocated. Although Section 19(b) had formerly authorized immediate effectiveness for a "due, fee or other charge imposed by the self-regulatory organization," the Commission adopted a policy and subsequently a rule stipulating that fees for data and other products available to persons that are not members of the self-regulatory organization must be approved by the Commission after first being published for comment. At the time, the Commission supported the adoption of the policy and the rule by pointing out that unlike members, whose representation in self-regulatory organization governance was mandated by the Act, non-members should be given the opportunity to comment on fees before being required to pay them, and that the Commission should specifically approve all such fees. NASDAQ believes that the amendment to Section 19 reflects Congress's conclusion that the evolution of self-regulatory organization governance and competitive market structure have rendered the Commission's prior policy on non-member fees obsolete. Specifically, many exchanges have evolved from member-owned not-for-profit corporations into for-profit investor-owned corporations (or subsidiaries of investor-owned corporations). Accordingly, exchanges no longer have narrow incentives to manage their affairs for the exclusive benefit of their members, but rather have incentives to maximize the appeal of their products to all customers, whether members or non-members, so as to broaden distribution and grow revenues. Moreover, we believe that the change also reflects an endorsement of the Commission's determinations that reliance on competitive markets is an appropriate means to ensure equitable and reasonable prices. Simply put, the change reflects a presumption that all fee changes should be permitted to take effect immediately, since the level of all fees are constrained by competitive forces.

The recent decision of the United States Court of Appeals for the District of Columbia Circuit in *NetCoalition* v. *SEC* [sic], No. 09–1042 (D.C. Cir. 2010), although reviewing a Commission decision made prior to the effective date of the Dodd-Frank Act, upheld the Commission's reliance upon competitive markets to set reasonable and equitably allocated fees for market data. "In fact, the legislative history indicates that the Congress intended that the market system 'evolve through the interplay of competitive forces as unnecessary regulatory restrictions are removed' and that the SEC wield its regulatory power 'in those situations where competition may not be sufficient,' such as in the creation of a 'consolidated transactional reporting system.' " *NetCoalition* [sic], at 15 (quoting H.R. Rep. No. 94–229, at 92 (1975), as reprinted in 1975 U.S.C.C.A.N. 321, 323). The court's conclusions about Congressional intent are therefore reinforced by the Dodd-Frank Act amendments, which create a presumption that exchange fees, including market data fees, may take effect immediately, without prior Commission approval, and that the Commission should take action to suspend a fee change and institute a proceeding to determine whether the fee change should be approved or disapproved only where the Commission has concerns that the change may not be consistent with the Act.

B. Self-Regulatory Organization's Statement on Burden on Competition

NASDAQ does not believe that the proposed rule change will result in any burden on competition that is not necessary or appropriate in furtherance of the purposes of the Act, as amended. Notwithstanding its determination that the Commission may rely upon competition to establish fair and equitably allocated fees for market data, the *NetCoalition* [sic] court found that the Commission had not, in that case, compiled a record that adequately supported its conclusion that the market for the data at issue in the case was competitive. For the reasons discussed above, NASDAQ believes that the Dodd-Frank Act amendments to Section 19 materially alter the scope of the Commission's review of future market data filings, by creating a presumption that all fees may take effect immediately, without prior analysis by the Commission of the competitive environment. Even in the absence of this important statutory change, however, NASDAQ believes that a record may readily be established to demonstrate the competitive nature of the market in question.

There is intense competition between trading platforms that provide transaction execution and routing services and proprietary data products. Transaction execution and proprietary data products are complementary in that market data is both an input and a byproduct of the execution service. In fact, market data and trade execution are a paradigmatic example of joint products with joint costs. The decision whether and on which platform to post an order will depend on the attributes of the platform where the order can be posted, including the execution fees, data quality and price and distribution of its data products. Without the prospect of a taking order seeing and reacting to a posted order on a particular platform, the posting of the order would accomplish little. Without trade executions, exchange data products cannot exist. Data products are valuable to many end users only insofar as they provide information that end users expect will assist them or their customers in making trading decisions.

The costs of producing market data include not only the costs of the data distribution infrastructure, but also the costs of designing, maintaining, and operating the exchange's transaction execution platform and the cost of regulating the exchange to ensure its fair operation and maintain investor confidence. The total return that a trading platform earns reflects the revenues it receives from both products and the joint costs it incurs. Moreover, an exchange's customers view the costs of transaction executions and of data as a unified cost of doing business with the exchange. A broker-dealer will direct orders to a particular exchange only if the expected revenues from executing trades on the exchange exceed net transaction execution costs and the cost of data that the broker-dealer chooses to buy to support its trading decisions (or those of its customers). The choice of data products is, in turn, a product of the value of the products in making profitable trading decisions. If the cost of the product exceeds its expected value, the broker-dealer will choose not to buy it. Moreover, as a broker-dealer chooses to direct fewer orders to a particular exchange, the value of the product to that broker-dealer decreases, for two reasons. First, the product will contain less information, because executions of the broker-dealer's orders will not be reflected in it. Second, and perhaps more important, the product will be less valuable to that broker-dealer because it does not provide information about the venue to which it is directing its orders. Data from the competing venue to which the broker-dealer is directing orders will become correspondingly more valuable.

Thus, a super-competitive increase in the fees charged for either transactions or data has the potential to impair revenues from both products. "No one disputes that competition for order flow is 'fierce'." *NetCoalition* at 24. However, the existence of fierce competition for order flow implies a high degree of price sensitivity on the part of broker-dealers

with order flow, since they may readily reduce costs by directing orders toward the lowest-cost trading venues. A broker-dealer that shifted its order flow from one platform to another in response to order execution price differentials would both reduce the value of that platform's market data and reduce its own need to consume data from the disfavored platform. Similarly, if a platform increases its market data fees, the change will affect the overall cost of doing business with the platform, and affected broker-dealers will assess whether they can lower their trading costs by directing orders elsewhere and thereby lessening the need for the more expensive data.

Analyzing the cost of market data distribution in isolation from the cost of all of the inputs supporting the creation of market data will inevitably underestimate the cost of the data. Thus, because it is impossible to create data without a fast, technologically robust, and well-regulated execution system, system costs and regulatory costs affect the price of market data. It would be equally misleading, however, to attribute all of the exchange's costs to the market data portion of an exchange's joint product. Rather, all of the exchange's costs are incurred for the unified purposes of attracting order flow, executing and/or routing orders, and generating and selling data about market activity. The total return that an exchange earns reflects the revenues it receives from the joint products and the total costs of the joint products.

Competition among trading platforms can be expected to constrain the aggregate return each platform earns from the sale of its joint products, but different platforms may choose from a range of possible, and equally reasonable, pricing strategies as the means of recovering total costs. For example, some platform may choose to pay rebates to attract orders, charge relatively low prices for market information (or provide information free of charge) and charge relatively high prices for accessing posted liquidity. Other platforms may choose a strategy of paying lower rebates (or no rebates) to attract orders, setting relatively high prices for market information, and setting relatively low prices for accessing posted liquidity. In this environment, there is no economic basis for regulating maximum prices for one of the joint products in an industry in which suppliers face competitive constraints with regard to the joint offering. This would be akin to strictly regulating the price that an automobile manufacturer can charge for car sound systems despite the existence of a highly competitive market for cars and the availability of after-market alternatives to the manufacturer-supplied system.

The market for market data products is competitive and inherently contestable because there is fierce competition for the inputs necessary to the creation of proprietary data and strict pricing discipline for the proprietary products themselves. Numerous exchanges compete with each other for listings, trades, and market data itself, providing virtually limitless opportunities for entrepreneurs who wish to produce and distribute their own market data. This proprietary data is produced by each individual exchange, as well as other entities, in a vigorously competitive market.

Broker-dealers currently have numerous alternative venues for their order flow, including ten self-regulatory organization ("SRO") markets, as well as internalizing broker-dealers ("BDs") and various forms of alternative trading systems ("ATSs"), including dark pools and electronic communication networks ("ECNs"). Each SRO market competes to produce transaction reports via trade executions, and two FINRA-regulated Trade Reporting Facilities ("TRFs") compete to attract internalized transaction reports. Competitive markets for order flow, executions, and transaction reports provide pricing discipline for the inputs of proprietary data products.

The large number of SROs, TRFs, BDs, and ATSs that currently produce proprietary data or are currently capable of producing it provides further pricing discipline for proprietary data products. Each SRO, TRF, ATS, and BD is currently permitted to produce proprietary data products, and many currently do or have announced plans to do so, including NASDAQ, NYSE, NYSE Amex, NYSEArca, and BATS.

Any ATS or BD can combine with any other ATS, BD, or multiple ATSs or BDs to produce joint proprietary data products. Additionally, order routers and market data vendors can facilitate single or multiple broker-dealers' production of proprietary data products. The potential sources of proprietary products are virtually limitless.

The fact that proprietary data from ATSs, BDs, and vendors can bypass SROs is significant in two respects. First, non-SROs can compete directly with SROs for the production and sale of proprietary data products, as BATS and Arca did before registering as exchanges by publishing proprietary book data on the Internet. Second, because a single order or transaction report can appear in an SRO proprietary product, a non-SRO proprietary product, or both, the data available in proprietary products is exponentially greater than the actual number of orders and transaction reports that exist in the marketplace.

Market data vendors provide another form of price discipline for proprietary data products because they control the primary means of access to end users. Vendors impose price restraints based upon their business models. For example, vendors such as Bloomberg and Reuters that assess a surcharge on data they sell may refuse to offer proprietary products that end users will not purchase in sufficient numbers. Internet portals, such as Yahoo, impose discipline by providing only data that will enable them to attract "eyeballs" that contribute to their advertising revenue. Retail broker-dealers, such as Schwab and Fidelity, offer their customers proprietary data only if it promotes trading and generates sufficient commission revenue. Although the business models may differ, these vendors' pricing discipline is the same: They can simply refuse to purchase any proprietary data product that fails to provide sufficient value. NASDAQ and other producers of proprietary data products must understand and respond to these varying business models and pricing disciplines in order to market proprietary data products successfully.

In addition to the competition and price discipline described above, the market for proprietary data products is also highly contestable because market entry is rapid, inexpensive, and profitable. The history of electronic trading is replete with examples of entrants that swiftly grew into some of the largest electronic trading platforms and proprietary data producers: Archipelago, Bloomberg Tradebook, Island, RediBook, Attain, TracECN, BATS Trading and Direct Edge. A proliferation of dark pools and other ATSs operate profitably with fragmentary shares of consolidated market volume.

Regulation NMS, by deregulating the market for proprietary data, has increased the contestability of that market. While broker-dealers have previously published their proprietary data individually, Regulation NMS encourages market data vendors and broker-dealers to produce proprietary products cooperatively in a manner never before possible. Multiple market data vendors already have the capability to aggregate data and disseminate it on a profitable scale, including Bloomberg, and Thomson-Reuters.

The court in *NetCoalition* concluded that the Commission had failed to

demonstrate that the market for market data was competitive based on the reasoning of the Commission's *NetCoalition* order because, in the court's view, the Commission had not adequately demonstrated that the depth-of-book data at issue in the case is used to attract order flow. NASDAQ believes, however, that evidence not before the court clearly demonstrates that availability of depth data attracts order flow. For example, NASDAQ submits that in and of itself, NASDAQ's decision voluntarily to cap fees on existing products, as is the effect of an enterprise license, is evidence of market forces at work. In fact, the instant proposal creates a second enterprise license for non-professional usage of depth data to complement the existing enterprise license set forth at NASDAQ Rule 7023(a)(1)(C).

Competition among platforms has driven NASDAQ continually to improve its platform data offerings and to cater to customers' data needs. For example, NASDAQ has developed and maintained multiple delivery mechanisms (IP, multi-cast, and compression) that enable customers to receive data in the form and manner they prefer and at the lowest cost to them. NASDAQ offers front end applications such as its "Bookviewer" to help customers utilize data. NASDAQ has created new products like TotalView Aggregate to complement TotalView ITCH and Level 2, because offering data in multiple formatting allows NASDAQ to better fit customer needs. NASDAQ offers data via multiple extranet providers, thereby helping to reduce network and total cost for its data products. NASDAQ has developed an online administrative system to provide customers transparency into their data feed requests and streamline data usage reporting. NASDAQ has also expanded its Enterprise License options that reduce the administrative burden and costs to firms that purchase market data.

Despite these enhancements and a dramatic increase in message traffic, NASDAQ's fees for depth-of-book data have remained flat. In fact, as a percent of total customer costs, NASDAQ data fees have fallen relative to other data usage costs—including bandwidth, programming, and infrastructure—that have risen. The same holds true for execution services; despite numerous enhancements to NASDAQ's trading platform, absolute and relative trading costs have declined. Platform competition has intensified as new entrants have emerged, constraining prices for both executions and for data.

C. Self-Regulatory Organization's Statement on Comments on the Proposed Rule Change Received From Members, Participants, or Others

Written comments were neither solicited nor received.

III. Date of Effectiveness of the Proposed Rule Change and Timing for Commission Action

The foregoing rule change has become effective pursuant to Section 19(b)(3)(A)(ii) of the Act.[12] At any time within 60 days of the filing of the proposed rule change, the Commission summarily may temporarily suspend such rule change if it appears to the Commission that such action is necessary or appropriate in the public interest, for the protection of investors, or otherwise in furtherance of the purposes of the Act. If the Commission takes such action, the Commission shall institute proceedings to determine whether the proposed rule should be approved or disapproved.

IV. Solicitation of Comments

Interested persons are invited to submit written data, views, and arguments concerning the foregoing, including whether the proposed rule change is consistent with the Act. Comments may be submitted by any of the following methods:

Electronic Comments

- Use the Commission's Internet comment form (*http://www.sec.gov/rules/sro.shtml*); or
- Send an e-mail to *rule-comments@sec.gov.* Please include File Number SR–NASDAQ–2010–125 on the subject line.

Paper Comments

- Send paper comments in triplicate to Elizabeth M. Murphy, Secretary, Securities and Exchange Commission, 100 F Street, NE., Washington, DC 20549–1090.

All submissions should refer to File Number SR–NASDAQ–2010–125. This file number should be included on the subject line if e-mail is used. To help the Commission process and review your comments more efficiently, please use only one method. The Commission will post all comments on the Commission's Internet Web site (*http://www.sec.gov/rules/sro.shtml*). Copies of the submission, all subsequent amendments, all written statements with respect to the proposed rule change that are filed with the Commission, and all written communications relating to the proposed rule change between the Commission and any person, other than those that may be withheld from the public in accordance with the provisions of 5 U.S.C. 552, will be available for website viewing and printing in the Commission's Public Reference Room, on official business days between the hours of 10 a.m. and 3 p.m. Copies of the filing also will be available for inspection and copying at the principal office of the Exchange. All comments received will be posted without change; the Commission does not edit personal identifying information from submissions. You should submit only information that you wish to make available publicly. All submissions should refer to File Number SR–NASDAQ–2010–125 and should be submitted on or before November 9, 2010.

For the Commission, by the Division of Trading and Markets, pursuant to delegated authority.[13]

Florence E. Harmon,

Deputy Secretary.

[FR Doc. 2010–26208 Filed 10–18–10; 8:45 am]

BILLING CODE 8011–01–P

[12] 15 U.S.C. 78s(b)(3)(a)(ii).

[13] 17 CFR 200.30–3(a)(12).

SECURITIES AND EXCHANGE COMMISSION

[Release No. 34–63098; File No. SR–NASDAQ–2010–074]

Self-Regulatory Organizations; The NASDAQ Stock Market LLC; Order Instituting Proceedings To Determine Whether To Disapprove Proposed Rule Change, as Modified by Amendment No. 1, To Adopt Rule 4753(c) as a Six Month Pilot in 100 NASDAQ-Listed Securities

October 13, 2010.

I. Introduction

On June 18, 2010, The NASDAQ Stock Market LLC ("Nasdaq" or the "Exchange") filed with the Securities and Exchange Commission ("Commission"), pursuant to Section 19(b)(1) of the Securities Exchange Act of 1934 ("Act") [1] and Rule 19b–4 thereunder,[2] a proposed rule change to implement, on a six-month pilot basis, a volatility-based trading pause in 100 Nasdaq-listed securities ("Volatility Guard"). On June 25, 2010, Nasdaq filed Amendment No. 1 to the proposed rule change. The proposed rule change, as amended, was published for comment in the **Federal Register** on July 15,

[1] 15 U.S.C. 78s(b)(1).

[2] 17 CFR 240.19b–4.

2010.[3] The Commission received four comment letters on the proposal.[4] Nasdaq responded to these comments on August 12, 2010.[5] The Commission subsequently extended the time period in which to either approve the proposed rule change, or to institute proceedings to determine whether to disapprove the proposed rule change, to October 13, 2010.[6] This order institutes proceedings to determine whether to disapprove the proposed rule change.

II. Description of the Proposal

Nasdaq proposes to adopt, on a pilot basis, a volatility-based trading halt for 100 Nasdaq-listed securities. Under this proposal, Nasdaq would suspend trading in a security if a trade in that security is executed at a price that exceeds a certain threshold, as measured over the preceding 30 seconds. The triggering threshold varies according to the price of the security, *i.e.,* 15% for securities with an execution price of $1.75 and under; 10% for securities over $1.75 and up to $25; 5% for securities over $25 and up to $50; and 3% for securities over $50. If the Volatility Guard were triggered, Nasdaq would suspend trading in that security for a period of 60 seconds, but would maintain all current quotes and orders during that time, and would continue to accept quotes and orders. Following this 60-second period, Nasdaq would re-open the market using its Halt Cross mechanism. According to Nasdaq, the Volatility Guard is similar in purpose to the Liquidity Replenishment Points ("LRPs") rules that currently exist on the New York Stock Exchange ("NYSE").

III. Comment Letters

Three of the four commenters expressed concerns about the effect of this proposal upon market volatility. These commenters stated that the Volatility Guard could actually increase volatility marketwide by re-directing trading in a security to other potentially less liquid venues once trading in that security had been halted on Nasdaq.[7] One commenter argued that this proposal, coupled with the LRPs currently in effect on the NYSE, would result in disparate market approaches towards dampening volatility that may create confusion among market participants, particularly in times of market stress, and exacerbate market volatility.[8]

The fourth commenter, however, supported Nasdaq's "right to design the controls it believes are best for trading on its market."[9] This commenter stated that the national market system was designed to encourage competitive distinctions such as Nasdaq's Volatility Guard and NYSE's LRPs.[10] According to this commenter, both the Nasdaq proposal and the NYSE LRPs "provide certainty and predictability of operation," and permit those markets to pursue strategies where the quality of price need not always defer to speed of execution.[11]

In its response, Nasdaq rejected the argument that the proposed Volatility Guard would exacerbate market volatility.[12] Nasdaq stated that it specifically designed the Volatility Guard to work within the parameters of the recently adopted single-stock circuit breakers, and to avoid the potential for conflicting standards between the two mechanisms.[13] Nasdaq also asserted that there is no evidence that the Volatility Guard would increase volatility in a particular security; rather, Nasdaq stated that the Volatility Guard would actually keep aberrant volatility on Nasdaq from spreading to other markets.[14]

Nasdaq also argued that the proposed Volatility Guard differed significantly from the NYSE LRPs, and that criticizing the Volatility Guard by comparing it to the LRPs was misleading. Nasdaq stated that the Volatility Guard, unlike the LRPs, would be based on clear and predictable criteria that would trigger a pause only in the event of a significant imbalance.[15] Accordingly, Nasdaq did not believe it appropriate to make a generic assertion that all market-based single-stock circuit breakers are detrimental.[16]

Finally, Nasdaq stated that it was employing prudent precautions in implementing the Volatility Guard. In particular, Nasdaq would implement the Volatility Guard as a pilot, limited in time and scope, during which time the Volatility Guard could be adjusted as needed. Nasdaq would also provide data to the Commission during the pilot period about the efficiency and effect of the Volatility Guard.[17]

IV. Proceedings To Determine Whether To Disapprove SR–NASDAQ–2010–074 and Grounds for Disapproval Under Consideration

Nasdaq's proposal is presented by the Exchange as an effort to protect Nasdaq-listed securities and Nasdaq market participants from aberrant volatility, such as that witnessed on May 6, 2010. As noted above, however, several commenters argued that individual exchange-specific mechanisms to moderate volatility may in fact exacerbate the volatility of the market overall, create confusion, and complicate the operation of the market-wide single stock circuit breakers.

Although the events of May 6, 2010 provide but one example of the effect of an individual exchange volatility moderator, the Report of the Staff of the Commodity Futures Trading Commission and the Commission (the "May 6 Staff Report")[18] did not find that NYSE LRPs caused or created the broad-based liquidity crisis on that day.[19] However, the May 6 Staff Report noted, among other things, that there were a few LRP events affecting certain stocks in which available liquidity on the NYSE may have been sufficient to absorb some of the selling pressure felt by other markets.[20] In addition, there were reports from market participants that the increasing number of LRPs on May 6 played into their decisions to reduce liquidity, pause trading, or withdraw from the markets.[21] More

[3] *See* Securities Exchange Act Release No. 62468 (July 7, 2010), 75 FR 41258.

[4] *See* Letter from Joe Ratterman, Chairman and Chief Executive Officer, BATS Global Markets, Inc., to Hon. Mary Schapiro, Chairman, Commission, dated July 1, 2010 ("BATS Letter"); Letter from Jose Marques, Managing Director, Deutsche Bank Securities Inc., to Elizabeth M. Murphy, Secretary, Commission, dated July 21, 2010 ("Deutsche Bank Letter"); Letter from Janet M. Kissane, Senior Vice President, Legal and Corporate Secretary, NYSE Euronext, to Elizabeth Murphy, Secretary, Commission, dated August 3, 2010 ("NYSE Letter"); Letter from Ann L. Vlcek, Managing Director and Associate General Counsel, Securities Industry and Financial Markets Association, to Elizabeth M. Murphy, Secretary, Commission, dated June 25, 2010 ("SIFMA Letter").

[5] *See* Letter from T. Sean Bennett, Assistant General Counsel, Nasdaq, to Elizabeth M. Murphy, Secretary, Commission ("Nasdaq response").

[6] *See* Securities Exchange Act Release No. 62740 (August 18, 2010), 75 FR 52049 (August 24, 2010).

[7] *See* BATS Letter at 2; Deutsche Bank Letter at 4; SIFMA Letter at 3.

[8] *See* Deutsche Bank Letter at 4.

[9] *See* NYSE Letter at 2. In its comment letter, NYSE also addressed what it perceived as Nasdaq's inaccurate description of the LRPs. NYSE provided additional detail about the LRPs, the role of the LRPs during the events of May 6, 2010, and the interaction between LRPs and the recently approved single-stock circuit breakers.

[10] *Id.*

[11] *Id.* at 3–4.

[12] Nasdaq response at 2.

[13] *Id.*

[14] *Id.*

[15] *Id.* at 3.

[16] *Id.*

[17] *Id.*

[18] *See Report of the Staffs of the CFTC and SEC to the Joint Advisory Committee on Emerging Regulatory Issues,* "Findings Regarding the Market Events of May 6, 2010", dated September 30, 2010.

[19] *Id.* at 70.

[20] *Id.* Specifically, the May 6 Staff Report notes that there were 19 LRP events affecting 12 stocks in which available liquidity within 500 basis points of the national best bid or offer may have been able to absorb sell pressure.

[21] *Id.* at 70–71.

broadly, the Commission notes that it is not yet clear whether the market-wide single-stock circuit breakers, as they may be expanded or adjusted, are likely to interact with individual exchange volatility moderators such as the NYSE LRPs or, if approved, Nasdaq's Volatility Guard, in a positive, neutral or negative way.

The Commission, therefore, is instituting proceedings pursuant to Section 19(b)(2)(B) of the Act to determine whether the proposed rule change should be disapproved. Institution of disapproval proceedings appears appropriate at this time in view of the legal and policy issues raised by the proposal. Institution of disapproval proceedings, however, does not indicate that the Commission has formulated any conclusions with respect to any of the issues involved. Rather, as described in greater detail below, the Commission seeks and encourages interested persons to comment on the proposed rule change.

The section of the Act applicable to the proposed rule change that provides the grounds for disapproval under consideration is Section 6(b)(5),[22] which requires that the rules of an exchange be designed, among other things, to prevent fraudulent and manipulative acts and practices, to promote just and equitable principles of trade, to remove impediments to and perfect the mechanism of a free and open market and a national market system and, in general, to protect investors and the public interest. Specifically, the Commission believes the proposal raises issues as to whether the Volatility Guard, by halting trading on Nasdaq when the price of a security moves quickly over a short period of time, will exacerbate the volatility of trading in that security on the other exchanges and over-the-counter trading centers that remain open. In addition, because the thresholds for triggering the Volatility Guard, and the length of the trading halt that results, differ from those of the recently approved, market-wide single-stock circuit breakers, the Commission believes the proposal raises issues as to whether the operation of the Volatility Guard will interfere with, or otherwise limit the effectiveness of, the circuit breakers, the goal of which is to prevent potentially destabilizing price volatility across the U.S. securities markets.[23]

V. Procedure: Request for Written Comments

The Commission requests that interested persons provide written submissions of their views, data and arguments with respect to the concerns identified above, as well as any others they may have with the proposal. In particular, the Commission invites the written views of interested persons concerning whether the proposed rule change is inconsistent with the Section 6(b)(5) or any other provision of the Act, or the rules and regulations thereunder. Although there do not appear to be any issues relevant to approval or disapproval which would be facilitated by an oral presentation of views, data, and arguments, the Commission will consider, pursuant to Rule 19b–4, any request for an opportunity to make an oral presentation.[24]

Interested persons are invited to submit written data, views and arguments regarding whether the proposed rule change should be disapproved by December 3, 2010. Any person who wishes to file a rebuttal to any other person's submission must file that rebuttal by December 20, 2010.

The Commission specifically reiterates its request for comment on the following items:

- A stated purpose of the proposal is to protect Nasdaq-listed securities and market participants from "aberrant" volatility, such as that which occurred on May 6, 2010 and may be caused by operational or structural factors beyond the control of issuers and individual markets. To what extent do the price changes that would trigger a trading halt under the proposal indicate the potential existence of "aberrant" volatility, as opposed to the normal operation of the markets? If these price changes indicate potentially "aberrant" volatility, to what extent will the proposal address such volatility in a manner appropriate and consistent with the purposes of the Act?
- Will a trading halt at Nasdaq under the proposal restrict liquidity or increase volatility in the affected stock, since other markets can continue to trade the stock and may not have comparable volatility halts?
- In what respects are the consequences of this proposal likely to be similar to, or different from, the effects of other exchange-specific mechanisms that currently restrict trading on the relevant exchange under certain circumstances?
- More generally, to what extent is it appropriate for the various exchanges to adopt different and potentially inconsistent approaches to trading pauses or restrictions that might affect the same stock?
- To what extent does the answer change based on whether the affected stock is already subject to a market-wide single-stock circuit breaker that applies consistently across all trading venues?

Comments may be submitted by any of the following methods:

Electronic Comments

- Use the Commission's Internet comment form (*http://www.sec.gov/rules/sro.shtml*); or
- Send an e-mail to *rule-comments@sec.gov.* Please include File Number SR–NASDAQ–2010–074 on the subject line.

Paper Comments

- Send paper comments in triplicate to Elizabeth M. Murphy, Secretary, Securities and Exchange Commission, Station Place, 100 F Street, NE., Washington, DC 20549–1090.

All submissions should refer to File Number SR–NASDAQ–2010–074. This file number should be included on the subject line if e-mail is used. To help the Commission process and review your comments more efficiently, please use only one method. The Commission will post all comments on the Commission's Internet Web site (*http://www.sec.gov/rules/sro.shtml*). Copies of the submission, all subsequent amendments, all written statements with respect to the proposed rule change that are filed with the Commission, and all written communications relating to the proposed rule change between the Commission and any person, other than those that may be withheld from the public in accordance with the provisions of 5 U.S.C. 552, will be available for Web site viewing and printing in the Commission's Public Reference Room, 100 F Street, NE., Washington, DC 20549, on official business days between the hours of 10 a.m. and 3 p.m. Copies of such filing

[22] 15 U.S.C. 78f(b)(5).

[23] In 2008, the Commission approved a similar Nasdaq proposal to establish a volatility-based trading pause for a one-year pilot period. *See* Securities Exchange Act Release No. 58386 (August 19, 2008), 73 FR 50380 (August 26, 2008) (SR–NASDAQ–2007–067). Nasdaq never implemented that pilot. The initial proposal was, however, considered and approved by the Commission before the events of May 6, 2010, at which time questions were raised about the market-wide impact of individual exchange volatility moderators in times of market stress. In addition, as noted above, there are questions about the way in which the newly-implemented single-stock circuit breakers, as they may be expanded or adjusted, will interact with exchange-specific volatility moderators.

[24] Section 19(b)(2) of the Act, as amended by the Securities Acts Amendments of 1975, Public Law 94–29 (June 4, 1975), grants the Commission flexibility to determine what type of proceeding—either oral or notice and opportunity for written comments—is appropriate for consideration of a particular proposal by a self-regulatory organization. *See* Securities Acts Amendments of 1975, Senate Comm. on Banking, Housing & Urban Affairs, S. Rep. No. 75, 94th Cong., 1st Sess. 30 (1975).

also will be available for inspection and copying at the principal office of Nasdaq. All comments received will be posted without change; the Commission does not edit personal identifying information from submissions. You should submit only information that you wish to make publicly available. All submissions should refer to File Number SR–NASDAQ–2010–074 and should be submitted on or before December 3, 2010.

For the Commission, by the Division of Trading and Markets, pursuant to delegated authority.[25]

Florence E. Harmon,

Deputy Secretary.

[FR Doc. 2010–26215 Filed 10–18–10; 8:45 am]

BILLING CODE 8011–01–P

SECURITIES AND EXCHANGE COMMISSION

[Release No. 34–63090; File No. SR–BATS–2010–027]

Self-Regulatory Organizations; BATS Exchange, Inc.; Notice of Filing and Immediate Effectiveness of Proposed Rule Change by BATS Exchange, Inc. To Amend BATS Rule 21.9, Entitled "Order Routing"

October 13, 2010.

Pursuant to Section 19(b)(1) of the Securities Exchange Act of 1934 (the "Act"),[1] and Rule 19b–4 thereunder,[2] notice is hereby given that on October 4, 2010, BATS Exchange, Inc. (the "Exchange" or "BATS") filed with the Securities and Exchange Commission ("Commission") the proposed rule change as described in Items I and II below, which Items have been prepared by the Exchange. The Exchange has designated this proposal as a "non-controversial" proposed rule change pursuant to Section 19(b)(3)(A) of the Act[3] and Rule 19b–4(f)(6)(iii) thereunder,[4] which renders it effective upon filing with the Commission. The Commission is publishing this notice to solicit comments on the proposed rule change from interested persons.

I. Self-Regulatory Organization's Statement of the Terms of Substance of the Proposed Rule Change

The Exchange, on behalf of the BATS Options Market ("BATS Options"), proposes to amend BATS Rule 21.9, entitled "Order Execution," to modify the existing general description of Exchange routing functionality and to describe available routing strategies in greater detail.

The text of the proposed rule change is available at the Exchange's Web site at *http://www.batstrading.com,* at the principal office of the Exchange, at the Commission's Web site at *http://www.sec.gov,* and at the Commission's Public Reference Room.

II. Self-Regulatory Organization's Statement of the Purpose of, and Statutory Basis for, the Proposed Rule Change

In its filing with the Commission, the Exchange included statements concerning the purpose of and basis for the proposed rule change and discussed any comments it received on the proposed rule change. The text of these statements may be examined at the places specified in Item IV below. The Exchange has prepared summaries, set forth in Sections A, B, and C below, of the most significant parts of such statements.

A. Self-Regulatory Organization's Statement of the Purpose of, and Statutory Basis for, the Proposed Rule Change

1. Purpose

The Exchange proposes to amend Rule 21.9, which describes its order routing processes, to modify the existing general description of Exchange routing functionality and to describe available routing strategies in greater detail. Also, subject to User instructions, the Exchange currently allows orders that have been routed and then posted to the Exchange's order book to be re-routed if the order is subsequently locked or crossed by another options exchange ("RECYCLE Option"). The Exchange proposes to add a reference to the "RECYCLE Option" in its Rule, consistent with the general goal of the proposed changes to align the routing strategies offered by the Exchange with the rule text by providing additional specificity. The Exchange also wishes to make clear that, unless otherwise specified, the RECYCLE Option may be combined with any of the System routing strategies specified in Rule 21.9.

The Exchange is also amending Rule 21.9 to include a definition of "System routing table," defined as the proprietary process for determining the specific options exchanges to which the Exchange System routes orders and the order in which it routes them. The definition reflects the fact that the Exchange, like other options exchanges, maintains different routing tables for different routing strategies and modifies them on a regular basis to reflect assessments about the destination markets. Such assessments consider factors such as a destination's latency, fill rates, reliability, and cost. Accordingly, the definition specifies that the Exchange reserves the right to maintain a different routing table for different routing strategies and to modify routing tables at any time without notice.

Although the current rule language for Exchange routing strategies describes the available variations of strategies in general terms, the Exchange believes that understanding of these strategies would be enhanced by describing the different versions as separately named routing strategies.

Below is a description of the various routing strategies proposed pursuant to new paragraph (a)(2) of Rule 21.9.

- CYCLE. CYCLE is a routing strategy offered by the Exchange under which an order checks the System for available shares and then is sent sequentially to destinations on the System routing table for the full remaining size of such order.
- Parallel D. Parallel D is a routing strategy offered by the Exchange under which an order checks the System for available shares and then is sent to destinations on the System routing table. The System may route to multiple destinations at a single price level simultaneously through Parallel D routing.
- Parallel 2D. Parallel 2D is a routing strategy offered by the Exchange under which an order checks the System for available shares and then is sent to destinations on the System routing table. The System may route to multiple destinations and at multiple price levels simultaneously through Parallel 2D routing.
- Parallel T. Parallel T is a routing strategy offered by the Exchange under which an order checks the System for available displayed shares and then is sent only to Protected Quotations and only for displayed size. The System may route to multiple destinations and at multiple price levels simultaneously through Parallel T routing.
- "Destination Specific Orders" and "Directed ISOs" are routed orders described in Rule 21.1.

In addition to the changes described above, the Exchange is proposing additional modifications to paragraph (a)(1) of Rule 21.9 to further align Rule 21.9 with the corollary routing rule applicable to the Exchange's equity securities platform.

2. Statutory Basis

The rule change proposed in this submission is consistent with the

[25] 17 CFR 200.30–3(a)(57).

[1] 15 U.S.C. 78s(b)(1).

[2] 17 CFR 240.19b–4.

[3] 15 U.S.C. 78s(b)(3)(A).

[4] 17 CFR 240.19b–4(f)(6)(iii).

requirements of the Act and the rules and regulations thereunder that are applicable to a national securities exchange, and, in particular, with the requirements of Section 6(b) of the Act.[5] Specifically, the proposed change is consistent with Section 6(b)(5) of the Act,[6] because it is designed to prevent fraudulent and manipulative acts and practices, to promote just and equitable principles of trade, to foster cooperation and coordination with persons engaged in facilitating transactions in securities, and to remove impediments to, and perfect the mechanism of, a free and open market and a national market system. The proposed change to provide additional clarity and specificity to the Exchange's Rules regarding routing strategies further enhances transparency with respect to Exchange routing offerings. Furthermore, the Exchange believes that the routing strategies that it offers provide market participants with greater flexibility in routing orders without developing complicated order routing strategies on their own. Finally, many of the Exchange's Members that trade options on or through BATS Options also actively trade on the Exchange's equity securities platform. The Exchange believes that aligning the rules between its options and equities platform will help to alleviate potential confusion for such Members.

B. Self-Regulatory Organization's Statement on Burden on Competition

The Exchange does not believe that the proposed rule change imposes any burden on competition.

C. Self-Regulatory Organization's Statement on Comments on the Proposed Rule Change Received From Members, Participants or Others

The Exchange has neither solicited nor received written comments on the proposed rule change.

III. Date of Effectiveness of the Proposed Rule Change and Timing for Commission Action

Because the foregoing proposed rule change does not: (i) Significantly affect the protection of investors or the public interest; (ii) impose any significant burden on competition; and (iii) become operative for 30 days from the date on which it was filed, or such shorter time as the Commission may designate, it has become effective pursuant to Section 19(b)(3)(A) of the Act[7] and Rule 19b–4(f)(6)(iii) thereunder.[8]

A proposed rule change filed under Rule 19b–4(f)(6) normally may not become operative prior to 30 days after the date of filing.[9] However, Rule 19b–4(f)(6)(iii)[10] permits the Commission to designate a shorter time if such action is consistent with the protection of investors and the public interest. The Exchange has requested that the Commission waive the 30-day operative delay. The Exchange believes that its routing strategies benefit market participants and their customers by allowing them greater flexibility in their efforts to fill orders and minimize trading costs.[11] In addition, the Exchange notes that the proposal is consistent with the Exchange's existing equities routing rule as well as the existing rules of another national securities exchange.[12] The Commission believes that waiving the 30-day operative delay is consistent with the protection of investors and the public interest and hereby designates the proposal operative upon filing.[13]

At any time within 60 days of the filing of the proposed rule change, the Commission summarily may temporarily suspend such rule change if it appears to the Commission that such action is necessary or appropriate in the public interest, for the protection of investors, or otherwise in furtherance of the purposes of the Act.

IV. Solicitation of Comments

Interested persons are invited to submit written data, views and arguments concerning the foregoing, including whether the proposed rule change is consistent with the Act. Comments may be submitted by any of the following methods:

Electronic Comments

- Use the Commission's Internet comment form (*http://www.sec.gov/rules/sro.shtml*); or
- Send an e-mail to *rule-comments@sec.gov.* Please include File No. SR–BATS–2010–027 on the subject line.

Paper Comments

- Send paper comments in triplicate to Elizabeth M. Murphy, Secretary, Securities and Exchange Commission, 100 F Street, NE., Washington, DC 20549–1090.

All submissions should refer to File No. SR–BATS–2010–027. This file number should be included on the subject line if e-mail is used. To help the Commission process and review your comments more efficiently, please use only one method. The Commission will post all comments on the Commission's Internet Web site (*http://www.sec.gov/rules/sro.shtml*). Copies of the submission, all subsequent amendments, all written statements with respect to the proposed rule change that are filed with the Commission, and all written communications relating to the proposed rule change between the Commission and any person, other than those that may be withheld from the public in accordance with the provisions of 5 U.S.C. 552, will be available for Web site viewing and printing in the Commission's Public Reference Room, 100 F Street, NE., Washington, DC 20549, on official business days between the hours of 10 a.m. and 3 p.m. Copies of such filing also will be available for inspection and copying at the principal office of BATS. All comments received will be posted without change; the Commission does not edit personal identifying information from submissions. You should submit only information that you wish to make available publicly. All submissions should refer to File No. SR–BATS–2010–027 and should be submitted on or before November 9, 2010.

For the Commission, by the Division of Trading and Markets, pursuant to delegated authority.[14]

Florence E. Harmon,

Deputy Secretary.

[FR Doc. 2010–26209 Filed 10–18–10; 8:45 am]

BILLING CODE 8011–01–P

[5] 15 U.S.C. 78f(b).

[6] 15 U.S.C. 78f(b)(5).

[7] 15 U.S.C. 78s(b)(3)(A).

[8] 17 CFR 240.19b–4(f)(6).

[9] 17 CFR 240.19b–4(f)(6)(iii). In addition, Rule 19b–4(f)(6)(iii) requires that a self-regulatory organization submit to the Commission written notice of its intent to file the proposed rule change, along with a brief description and text of the proposed rule change, at least five business days prior to the date of filing of the proposed rule change, or such shorter time as designated by the Commission. The Exchange has satisfied this requirement.

[10] *Id.*

[11] *See* SR–BATS–2010–027, Item7.

[12] *See* SR–BATS–2010–027, Item7 and 8. *See also* BATS Rule 11.13 and The NASDAQ Stock Market LLC Rule 4758.

[13] For the purposes only of waiving the 30-day operative delay, the Commission has considered the proposed rule's impact on efficiency, competition, and capital formation. *See* 15 U.S.C. 78c(f).

[14] 17 CFR 200.30–3(a)(12).

SOCIAL SECURITY ADMINISTRATION

[Docket No. SSA–2010–0066]

Proposed Recommendation to the Social Security Administration for Occupational Information System (OIS) Development Planning; Request for Comment

AGENCY: Social Security Administration.

ACTION: Notice; Request for Comment.

SUMMARY: We need information about work that exists throughout the nation to determine whether claimants' impairments prevent them from doing not only their past work, but any other work in the U.S. economy. To that end, we are developing a long term strategy to obtain current and suitable occupational information critical for disability evaluation. In 2008, we established the Occupational Information Development Advisory Panel (Panel) to provide independent advice and recommendations on plans and activities to create an occupational information system tailored specifically for our disability programs and adjudicative needs. The Panel is soliciting comments on a recommendation it intends to make to us.

DATES: To be sure that your comments are considered, we must receive them no later than November 8, 2010.

ADDRESSES: You may submit comments by any one of three methods—Internet, fax or mail. Do not submit the same comments multiple times or by more than one method. Regardless of which method you choose, please state that your comments refer to Docket No. SSA–2010–0066, so that we may associate your comments with the correct activity. Caution: You should be careful to include in your comments only information that you wish to make publicly available. We strongly urge you not to include in your comments any personal information, such as a Social Security number or medical information.

1. *Internet:* We strongly recommend this method for submitting your comments. Visit the Federal eRulemaking portal at *http://www.regulations.gov.* Use the Search function of the webpage to find docket number SSA–2010–0066, and then submit your comments. Once you submit your comments, the system will issue you a tracking number to confirm your submission. You will not be able to view your comments immediately as we must manually post each comment. It may take up to a week for your comments to be viewable.

2. *Fax:* Fax comments to (410) 597–0825.

3. *Mail:* Address your comments to the Office of Program Development and Research, Occupational Information Development Project, Social Security Administration, 3–E–26 Operations Building, 6401 Security Boulevard, Baltimore, MD 21235–6401. Comments are available for public viewing on the Federal eRulemaking portal at *http://www.regulations.gov* or in person, during regular business hours, by appointment with the contact person identified below.

The Panel is soliciting comments on its Proposed Recommendation to the Social Security Administration for Occupational Information System Development Planning. The comment period is open through November 8, 2010.

CONTACT INFORMATION: Anyone requiring further information should contact the Panel staff at: Occupational Information Development Advisory Panel, Social Security Administration, 6401 Security Boulevard, 3–E–26 Operations, Baltimore, MD 21235–0001. *Fax:* 202–410–597–0825. E-mail to *OIDAP@ssa.gov.* For additional information, please visit the Panel Web site at *http://www.ssa.gov/oidap.*

Debra Tidwell-Peters,

Designated Federal Officer.

Occupational Information Development Advisory Panel

Proposed Recommendation to the Social Security Administration for Occupational Information System (OIS) Development Planning

In keeping with its charge to provide independent advice and guidance on plans and activities to replace the *Dictionary of Occupational Titles* (DOT) in disability adjudicative decisions and the development of a new OIS that will help the Social Security Administration (SSA) meet its burden of proof, is forensically defensible, reflects all work nationally and links residual functional capacity to the requirements of work, the Panel strongly recommends that SSA:

1. Take the immediate step to develop an overarching project plan and timeline that specifies SSA's needs and objectives with regard to occupational information;
2. Develop a fully articulated research plan and associated processes that provide for the coordination of necessary scientific research and allows for the incorporation of findings and results, as appropriate;
3. Prepare and make available to the Panel the overall project plan, including the attendant research plans, for advice and recommendation before further developmental activities for the OIS proceed; and,
4. Make public the aforementioned project and research plans, thus delineating how SSA plans to proceed in its efforts to develop said OIS.

The project plan should include scientific and programmatic justification for SSA's efforts going forth, as well as identification of the criteria that will ultimately be utilized to assess the performance of any new OIS system.

To fulfill the requirements of the aforementioned project plan, SSA must also develop and make public a scientifically sound research plan that addresses the needs delineated by the project plan and that will guide the entire OIS developmental process. To meet users' needs, maintain stakeholder confidence, and ensure legal defensibility, it is critical that all intended research protocols be developed with oversight by internal scientists well-versed in research methods along with programmatic specialists and be reviewed by the Panel prior to data collection.

Examples of issues that should be addressed by the recommended research plan include (but are not limited to) how to develop a content model that is legally defensible and possesses strong evidence of validity to determine the appropriate sampling methodologies for pilot testing of all instruments; how to develop a job analysis tool that will be utilized for collecting occupational information (including appropriate scales, methods of data collection, sources of data, etc.), and so on. The Panel recognizes that any plan that is developed will be necessarily dynamic as new information and data may inform future steps. However, this does not negate the need for a published plan that is scrutinized for scientific rigor and adequacy.

In conclusion, the Panel wishes to emphasize that to achieve the goal of a legally defensible OIS, rigorous scientific methods must be utilized. The original recommendations, and associated subcommittee reports, identified numerous empirical studies that should be conducted as part of the process of developing a new OIS. The Agency should examine these recommendations and identify the proposed studies that meet the requirements of good science and SSA's disability program law and regulations for coordination into the project and research plans going forth. In addition, SSA should coordinate existing efforts that meet the requirements of good science and SSA disability program law

and regulations, into the project and research plans going forth.

[FR Doc. 2010–26216 Filed 10–18–10; 8:45 am]

BILLING CODE 4191–02–P

DEPARTMENT OF STATE

[Public Notice 7168]

Shipping Coordinating Committee; Notice of Committee Meeting

The Shipping Coordinating Committee (SHC) will conduct an open meeting at 9:30 a.m. on Friday November 12, 2010, in Room 2415 of the United States Coast Guard Headquarters Building, 2100 Second Street, SW., Washington, DC 20593–0001. The primary purpose of the meeting is to prepare for the eighty-eighth Session of the International Maritime Organization's (IMO) Maritime Safety Committee to be held at the IMO Headquarters, United Kingdom, from November 24 to December 3, 2010.

The primary matters to be considered include:

—Adoption of the agenda; report on credentials
—Decisions of other IMO bodies, including the 2010 STCW Conference
—Consideration and adoption of amendments to mandatory instruments
—Measures to enhance maritime security
—Goal-based new ship construction standards
—LRIT-related matters
—Ship design and equipment
—Radiocommunications and search and rescue
—Fire protection
—Flag State implementation
—Safety of navigation
—Dangerous goods, solid cargoes and containers
—Training and watchkeeping
—Technical assistance sub-programme in maritime safety and security
—Capacity-building for the implementation of new measures
—Role of the human element
—Formal safety assessment
—Piracy and armed robbery against ships
—General cargo ship safety
—Implementation of instruments and related matters
—Relations with other organizations
—Application of the Committee's Guidelines
—Work programme
—Election of Chairman and Vice-Chairman for 2011

Members of the public may attend this meeting up to the seating capacity of the room. To facilitate the building security process, and to request reasonable accommodation, those who plan to attend should contact the meeting coordinator, LCDR Jason Smith, by e-mail at *jason.e.smith2@uscg.mil,* by phone at (202) 372–1376, by fax at (202) 372–1925, or in writing at Commandant (CG–52), U.S. Coast Guard, 2100 2nd Street, SW., Stop 7126, Washington, DC 20593–7126 not later than Friday November 5th 2010, 7 days prior to the meeting. Requests made after November 5th might not be able to be accommodated. Please note that due to security considerations, two valid, government issued photo identifications must be presented to gain entrance to the Headquarters building. The Headquarters building is accessible by taxi and privately owned conveyance (public transportation is not generally available). However, parking in the vicinity of the building is extremely limited. Additional information regarding this and other IMO SHC public meetings may be found at: *http://www.uscg.mil/imo.*

Dated: October 13, 2010.

Jon Trent Warner,

Executive Secretary, Shipping Coordinating Committee, Department of State.

[FR Doc. 2010–26265 Filed 10–18–10; 8:45 am]

BILLING CODE 4710–09–P

OFFICE OF THE UNITED STATES TRADE REPRESENTATIVE

North American Free Trade Agreement; Invitation for Applications for Inclusion on the Chapter 19 Roster

AGENCY: Office of the United States Trade Representative.

ACTION: Invitation for applications.

SUMMARY: Chapter 19 of the North American Free Trade Agreement ("NAFTA") provides for the establishment of a roster of individuals to serve on binational panels convened to review final determinations in antidumping or countervailing duty ("AD/CVD") proceedings and amendments to AD/CVD statutes of a NAFTA Party. The United States annually renews its selections for the Chapter 19 roster. Applications are invited from eligible individuals wishing to be included on the roster for the period April 1, 2011, through March 31, 2012.

DATES: Applications should be received no later than November 19, 2010.

ADDRESSES: Comments should be submitted (i) electronically to *http://www.regulations.gov,* docket number USTR–2010–0030, or (ii) by fax, to Sandy McKinzy at (202) 395–3640.

FOR FURTHER INFORMATION CONTACT: Suzanne Garner, Assistant General Counsel, Office of the United States Trade Representative, (202) 395–9663.

SUPPLEMENTARY INFORMATION:

Binational Panel Reviews Under NAFTA Chapter 19

Article 1904 of the NAFTA provides that a party involved in an AD/CVD proceeding may obtain review by a binational panel of a final AD/CVD determination of one NAFTA Party with respect to the products of another NAFTA Party. Binational panels decide whether such AD/CVD determinations are in accordance with the domestic laws of the importing NAFTA Party, and must use the standard of review that would have been applied by a domestic court of the importing NAFTA Party. A panel may uphold the AD/CVD determination, or may remand it to the national administering authority for action not inconsistent with the panel's decision. Panel decisions may be reviewed in specific circumstances by a three-member extraordinary challenge committee, selected from a separate roster composed of fifteen current or former judges.

Article 1903 of the NAFTA provides that a NAFTA Party may refer an amendment to the AD/CVD statutes of another NAFTA Party to a binational panel for a declaratory opinion as to whether the amendment is inconsistent with the General Agreement on Tariffs and Trade ("GATT"), the GATT Antidumping or Subsidies Codes, successor agreements, or the object and purpose of the NAFTA with regard to the establishment of fair and predictable conditions for the liberalization of trade. If the panel finds that the amendment is inconsistent, the two NAFTA Parties shall consult and seek to achieve a mutually satisfactory solution.

Chapter 19 Roster and Composition of Binational Panels

Annex 1901.2 of the NAFTA provides for the maintenance of a roster of at least 75 individuals for service on Chapter 19 binational panels, with each NAFTA Party selecting at least 25 individuals. A separate five-person panel is formed for each review of a final AD/CVD determination or statutory amendment. To form a panel, the two NAFTA Parties involved each appoint two panelists, normally by drawing upon individuals from the roster. If the Parties cannot agree upon the fifth panelist, one of the Parties, decided by lot, selects the fifth panelist from the roster. The majority of

individuals on each panel must consist of lawyers in good standing, and the chair of the panel must be a lawyer.

Upon each request for establishment of a panel, roster members from the two involved NAFTA Parties will be requested to complete a disclosure form, which will be used to identify possible conflicts of interest or appearances thereof. The disclosure form requests information regarding financial interests and affiliations, including information regarding the identity of clients of the roster member and, if applicable, clients of the roster member's firm.

Criteria for Eligibility for Inclusion on Chapter 19 Roster

Section 402 of the NAFTA Implementation Act (Pub. L. 103–182, as amended (19 U.S.C. 3432)) ("Section 402") provides that selections by the United States of individuals for inclusion on the Chapter 19 roster are to be based on the eligibility criteria set out in Annex 1901.2 of the NAFTA, and without regard to political affiliation. Annex 1901.2 provides that Chapter 19 roster members must be citizens of a NAFTA Party, must be of good character and of high standing and repute, and are to be chosen strictly on the basis of their objectivity, reliability, sound judgment, and general familiarity with international trade law. Aside from judges, roster members may not be affiliated with any of the three NAFTA Parties. Section 402 also provides that, to the fullest extent practicable, judges and former judges who meet the eligibility requirements should be selected.

Adherence to the NAFTA Code of Conduct for Binational Panelists

The "Code of Conduct for Dispute Settlement Procedures Under Chapters 19 and 20" (*see http://www.nafta-sec-alena.org/en/view.aspx?x=345&mtpiID=ALL),* which was established pursuant to Article 1909 of the NAFTA, provides that current and former Chapter 19 roster members "shall avoid impropriety and the appearance of impropriety and shall observe high standards of conduct so that the integrity and impartiality of the dispute settlement process is preserved." The Code also provides that candidates to serve on chapter 19 panels, as well as those who are ultimately selected to serve as panelists, have an obligation to "disclose any interest, relationship or matter that is likely to affect [their] impartiality or independence, or that might reasonably create an appearance of impropriety or an apprehension of bias." Annex 1901.2 of the NAFTA provides that roster members may engage in other business while serving as panelists, subject to the Code of Conduct and provided that such business does not interfere with the performance of the panelist's duties. In particular, Annex 1901.2 states that "[w]hile acting as a panelist, a panelist may not appear as counsel before another panel."

Procedures for Selection of Chapter 19 Roster Members

Section 402 establishes procedures for the selection by the Office of the United States Trade Representative ("USTR") of the individuals chosen by the United States for inclusion on the Chapter 19 roster. The roster is renewed annually, and applies during the one-year period beginning April 1 of each calendar year.

Under Section 402, an interagency committee chaired by USTR prepares a preliminary list of candidates eligible for inclusion on the Chapter 19 Roster. After consultation with the Senate Committee on Finance and the House Committee on Ways and Means, USTR selects the final list of individuals chosen by the United States for inclusion on the Chapter 19 roster.

Remuneration

Roster members selected for service on a Chapter 19 binational panel will be remunerated at the rate of 800 Canadian dollars per day.

Applications

Eligible individuals who wish to be included on the Chapter 19 roster for the period April 1, 2011, through March 31, 2012, are invited to submit applications. Persons submitting applications may either send one copy by fax to Sandy McKinzy at 202–395–3640, or should be submitted electronically to *http://www.regulations.gov,* docket number USTR–2010–0030.

To submit an application via *http://www.regulations.gov,* enter docket number USTR–2010–0030 on the home page and click "search". The site will provide a search-results page listing all documents associated with this docket. Find a reference to this notice by selecting "Notice" under "Document Type" on the left side of the search-results page, and click on the link entitled "Submit a Comment." (For further information on using the *http://www.regulations.gov* Web site, please consult the resources provided on the Web site by clicking on the "Help" link at the top of the home page.)

The *http://www.regulations.gov* site provides the option of providing comments by filling in a "Type Comment and Upload File" field, or by attaching a document. It is expected that most applications will be provided in an attached document. If a document is attached, it is necessary and sufficient to type "See attached" in the "Type Comment and Upload File" field.

Applications must be typewritten, and should be headed "Application for Inclusion on NAFTA Chapter 19 Roster." Applications should include the following information, and each section of the application should be numbered as indicated:

1. Name of the applicant.
2. Business address, telephone number, fax number, and e-mail address.
3. Citizenship(s).
4. Current employment, including title, description of responsibility, and name and address of employer.
5. Relevant education and professional training.
6. Spanish language fluency, written and spoken.
7. Post-education employment history, including the dates and addresses of each prior position and a summary of responsibilities.
8. Relevant professional affiliations and certifications, including, if any, current bar memberships in good standing.
9. A list and copies of publications, testimony, and speeches, if any, concerning AD/CVD law. Judges or former judges should list relevant judicial decisions. Only one copy of publications, testimony, speeches, and decisions need be submitted.
10. Summary of any current and past employment by, or consulting or other work for, the Governments of the United States, Canada, or Mexico.
11. The names and nationalities of all foreign principals for whom the applicant is currently or has previously been registered pursuant to the Foreign Agents Registration Act, 22 U.S.C. 611 *et seq.,* and the dates of all registration periods.
12. List of proceedings brought under U.S., Canadian, or Mexican AD/CVD law regarding imports of U.S., Canadian, or Mexican products in which the applicant advised or represented (for example, as consultant or attorney) any U.S., Canadian, or Mexican party to such proceeding and, for each such proceeding listed, the name and country of incorporation of such party.
13. A short statement of qualifications and availability for service on Chapter 19 panels, including information relevant to the applicant's familiarity with international trade law and willingness and ability to make time commitments necessary for service on panels.

14. On a separate page, the names, addresses, telephone and fax numbers of three individuals willing to provide information concerning the applicant's qualifications for service, including the applicant's character, reputation, reliability, judgment, and familiarity with international trade law.

Current Roster Members and Prior Applicants

Current members of the Chapter 19 roster who remain interested in inclusion on the Chapter 19 roster must submit updated applications. Individuals who have previously applied but have not been selected may reapply. If an applicant, including a current or former roster member, has previously submitted materials referred to in item 9, such materials need not be resubmitted.

Public Disclosure

Applications normally will not be subject to public disclosure and will not be posted publicly on www.regulations.gov. They may be referred to other federal agencies in the course of determining eligibility for the roster, and shared with foreign governments and the NAFTA Secretariat in the course of panel selection.

False Statements

Pursuant to section 402(c)(5) of the NAFTA Implementation Act, false statements by applicants regarding their personal or professional qualifications, or financial or other relevant interests that bear on the applicants' suitability for placement on the Chapter 19 roster or for appointment to binational panels, are subject to criminal sanctions under 18 U.S.C. 1001.

Paperwork Reduction Act

This notice contains a collection of information provision subject to the Paperwork Reduction Act ("PRA") that has been approved by the Office of Management and Budget ("OMB"). Notwithstanding any other provision of law, no person is required to respond to nor shall a person be subject to a penalty for failure to comply with a collection of information subject to the requirements of the PRA unless that collection of information displays a currently valid OMB number. This notice's collection of information burden is only for those persons who wish voluntarily to apply for nomination to the NAFTA Chapter 19 roster. It is expected that the collection of information burden will be under 3 hours. This collection of information contains no annual reporting or record keeping burden. This collection of information was approved by OMB under OMB Control Number 0350–0014. Please send comments regarding the collection of information burden or any other aspect of the information collection to USTR at the above e-mail address or fax number.

Privacy Act

The following statements are made in accordance with the Privacy Act of 1974, as amended (5 U.S.C. 552a). The authority for requesting information to be furnished is section 402 of the NAFTA Implementation Act. Provision of the information requested above is voluntary; however, failure to provide the information will preclude your consideration as a candidate for the NAFTA Chapter 19 roster. This information is maintained in a system of records entitled "Dispute Settlement Panelists Roster." Notice regarding this system of records was published in the **Federal Register** on November 30, 2001. The information provided is needed, and will be used by USTR, other federal government trade policy officials concerned with NAFTA dispute settlement, and officials of the other NAFTA Parties to select well-qualified individuals for inclusion on the Chapter 19 roster and for service on Chapter 19 binational panels.

Steven F. Fabry,

Assistant United States Trade Representative for Monitoring and Enforcement.

[FR Doc. 2010–26302 Filed 10–18–10; 8:45 am]

BILLING CODE 3190–W1–P

DEPARTMENT OF TRANSPORTATION

Surface Transportation Board

[Docket No. AB 290 (Sub-No. 322X); Docket No. AB 414 (Sub-No. 5X)]

Norfolk Southern Railway Company—Abandonment Exemption—in Polk County, IA; Iowa Interstate Railroad—Discontinuance of Service Exemption—in Polk County, IA

Norfolk Southern Railway Company (NSR) and Iowa Interstate Railroad (IAIS) (collectively, applicants) have jointly filed a verified notice of exemption under 49 CFR pt. 1152 subpart F—*Exempt Abandonments and Discontinuances of Service* for NSR to abandon, and for IAIS to discontinue service over, a 1.70-mile line of railroad between milepost DU 353.00 and milepost DU 354.70, in Grimes, Polk County, Iowa.[1] The line traverses United States Postal Service Zip Code 50111.

Applicants have certified that: (1) No local traffic has moved over the line for at least 2 years; (2) no overhead traffic has moved over the line for at least 2 years and overhead traffic, if there were any, could be rerouted over other lines; (3) no formal complaint filed by a user of rail service on the line (or by a state or local government entity acting on behalf of such user) regarding cessation of service over the line either is pending with the Surface Transportation Board (Board) or with any U.S. District Court or has been decided in favor of complainant within the 2-year period; and (4) the requirements at 49 CFR 1105.7(c) (environmental report), 49 CFR 1105.11 (transmittal letter), 49 CFR 1105.12 (newspaper publication), and 49 CFR 1152.50(d)(1) (notice to governmental agencies) have been met.

As a condition to these exemptions, any employee adversely affected by the abandonment or discontinuance shall be protected under *Oregon Short Line Railroad & The Union Pacific Railroad—Abandonment Portion Goshen Branch Between Firth & Ammon, in Bingham & Bonneville Counties, Idaho,* 360 I.C.C. 91 (1979). To address whether this condition adequately protects affected employees, a petition for partial revocation under 49 U.S.C. 10502(d) must be filed.

Provided no formal expression of intent to file an offer of financial assistance (OFA) has been received, these exemptions will be effective on November 18, 2010, unless stayed pending reconsideration. Petitions to stay that do not involve environmental issues,[2] formal expressions of intent to file an OFA under 49 CFR 1152.27(c)(2),[3] and trail use/rail banking requests under 49 CFR 1152.29 must be filed by October 29, 2010. Petitions to reopen or requests for public use conditions under 49 CFR 1152.28 must be filed by November 8, 2010, with: Surface Transportation Board, 395 E

[1] In 1995, IAIS was authorized to lease and operate 13.9 miles of rail line owned by Norfolk and Western Railway Company (NSR's predecessor), including the segment at issue here. *Iowa Interstate R.R.—Lease and Operation Exemption—Norfolk and W. Ry.,* FD 32731 (ICC served Oct. 13, 1995).

[2] The Board will grant a stay if an informed decision on environmental issues (whether raised by a party or by the Board's Office of Environmental Analysis (OEA) in its independent investigation) cannot be made before the abandonment exemption's effective date. *See Exemption of Out-of-Serv. Rail Lines,* 5 I.C.C.2d 377 (1989). Any request for a stay should be filed as soon as possible so that the Board may take appropriate action before the exemption's effective date.

[3] Each OFA must be accompanied by the filing fee, which is currently set at $1,500. *See* 49 CFR 1002.2(f)(25).

Street, SW., Washington, DC 20423–0001.

A copy of any petition filed with the Board should be sent to applicants' representatives: (1) Daniel G. Kruger, Attorney, Norfolk Southern Railway Company, Three Commercial Place, Norfolk, VA 23510; and (2) Lanny M. Van Daele, Corporate Counsel, Iowa Interstate Railroad, Ltd., 5900 6th Street, SW., Cedar Rapids, IA 52404.

If the verified notice contains false or misleading information, the exemptions are void *ab initio.*

Applicants have filed a joint combined environmental and historic report, which addresses the effects, if any, of the abandonment and discontinuance on the environment and historic resources. OEA will issue an environmental assessment (EA) by October 22, 2010. Interested persons may obtain a copy of the EA by writing to OEA (Room 1100, Surface Transportation Board, Washington, DC 20423–0001) or by calling OEA, at (202) 245–0305. Assistance for the hearing impaired is available through the Federal Information Relay Service (FIRS) at 1–800–877–8339. Comments on environmental and historic preservation matters must be filed within 15 days after the EA becomes available to the public.

Environmental, historic preservation, public use, or trail use/rail banking conditions will be imposed, where appropriate, in a subsequent decision.

Pursuant to the provisions of 49 CFR 1152.29(e)(2), NSR shall file a notice of consummation with the Board to signify that it has exercised the authority granted and fully abandoned the line. If consummation has not been effected by NSR's filing of a notice of consummation by October 19, 2011, and there are no legal or regulatory barriers to consummation, the authority to abandon will automatically expire.

Board decisions and notices are available on our Web site at *http://www.stb.dot.gov.*

Decided: October 12, 2010.

By the Board, Rachel D. Campbell, Director, Office of Proceedings.

Jeffrey Herzig,

Clearance Clerk.

[FR Doc. 2010–26234 Filed 10–18–10; 8:45 am]

BILLING CODE 4915–01–P

DEPARTMENT OF TRANSPORTATION

Federal Aviation Administration

Approval of Noise Compatibility Program for Chicago Executive Airport, Prospect Heights and Wheeling, IL

AGENCY: Federal Aviation Administration, DOT.

ACTION: Notice.

SUMMARY: The Federal Aviation Administration (FAA) announces its findings on the noise compatibility program (NCP) submitted by the Chicago Executive Airport Board of Directors for Chicago Executive Airport under the provisions of 49 U.S.C. 47501 *et seq.* (the Aviation Safety and Noise Abatement Act, herein referred to as "the Act") and 14 CFR part 150. On March 1, 2010, the FAA determined that the noise exposure maps submitted by Chicago Executive Airport Board of Directors for Chicago Executive Airport were in compliance with applicable requirements. On September 30, 2010, the FAA approved the Chicago Executive Airport noise compatibility program. Twenty-one of the twenty-seven recommendations of the program were approved.

DATES: *Effective Date:* The effective date of the FAA's approval of the Chicago Executive Airport noise compatibility program is September 30, 2010.

FOR FURTHER INFORMATION CONTACT: Ms. Amy Hanson, Environmental Protection Specialist, CHI–603, Federal Aviation Administration, Chicago Airport District Office, 2300 East Devon Avenue, Des Plaines, IL 60018. Telephone number: 847–294–7354. Documents reflecting this FAA action may also be reviewed at this same location.

SUPPLEMENTARY INFORMATION: This notice announces that the FAA has given its approval to the Noise Compatibility Program for Chicago Executive Airport, effective October 1, 2010.

The Chicago Executive Airport Board of Directors for Chicago Executive Airport submitted to the FAA the noise exposure maps, descriptions, and other documentation produced during the noise compatibility study. The Chicago Executive Airport noise exposure maps were determined by the FAA to be in compliance with applicable requirements on March 1, 2010. Notice of this determination was published in the **Federal Register** on March 12, 2010, Volume 75, Number 48, pages 11990 and 11991.

Under section 47504 of the Act, an airport operator who has previously submitted a noise exposure map may submit to the FAA a noise compatibility program which sets forth the measures taken or proposed by the airport operator for the reduction of existing non-compatible land uses and prevention of additional non-compatible land uses within the area covered by the noise exposure maps. The Act requires such programs to be developed in consultation with interested and affected parties including local communities, government agencies, airport users, and FAA personnel.

Each airport noise compatibility program developed in accordance with Federal Aviation Regulations (FAR) Part 150 is a local program. The FAA does not substitute its judgment for that of the airport proprietor with respect to which measures should be recommended for action. The FAA's approval or disapproval of FAR Part 150 program recommendations is measured according to the standards expressed in Part 150 of the Act and is limited to the following determinations:

a. The noise compatibility program was developed in accordance with the provisions and procedures of FAR Part 150;

b. Program measures are reasonably consistent with achieving the goals of reducing existing non-compatible land uses around the airport and preventing the introduction of additional non-compatible land uses;

c. Program measures would not create an undue burden on interstate or foreign commerce, unjustly discriminate against types or classes of aeronautical uses, violate the terms of airport grants agreements, or intrude into areas preempted by the Federal Government; and

d. Program measures relating to the use of flight procedures can be implemented within the period covered by the program without derogating safety, adversely affecting the efficient use of navigable airspace and air traffic control systems, or adversely affecting other powers and responsibilities of the Administrator prescribed by law.

The submitted program included twenty-seven proposed actions for noise mitigation on and off the airport, as applicable. The FAA completed is review and determined that the procedural and substantive requirements of the Act and FAR Part 150 have been satisfied.

On October 1, 2010, the FAA approved the Chicago Executive Airport noise compatibility program. Twenty-one of the twenty-seven recommendations of the program were approved.

Specific limitations with respect to FAA's approval of an airport noise compatibility program are delineated in FAR Part 150, section 150.5. Approval is not a determination concerning the acceptability of land uses under Federal, State, or local law. Approval does not by itself constitute an FAA implementing action. A request for Federal action or approval to implement specific noise compatibility measures may be required, and an FAA decision on the request may require an environmental assessment of the proposed action. Approval does not constitute a commitment by the FAA to financially assist in the implementation of the program nor a determination that all measures covered by the program are eligible for grant-in-aid funding from the FAA. Where Federal funding is sought, requests for project grants must be submitted to the FAA Chicago Airports District Office.

These determinations are set forth in detail in a Record of Approval signed by Susan Schalk on October 1, 2010. The Record of Approval, as well as other evaluation materials and the documents comprising the submittal, are available for review at the FAA office listed above and at the administrative offices of the Chicago Executive Airport. The Record of Approval also will be available online at: *http://www.faa.gov/airports/environmental/airport_noise/part_150/states/.*

Issued in Des Plaines, IL, October 6, 2010.

James G. Keefer,

Manager, Chicago Airports District Office.

[FR Doc. 2010–26324 Filed 10–18–10; 8:45 am]

BILLING CODE 4910–13–P

DEPARTMENT OF TRANSPORTATION

Federal Highway Administration

Buy America Waiver Notification

AGENCY: Federal Highway Administration (FHWA), DOT.

ACTION: Notice.

SUMMARY: This notice provides information regarding the FHWA's finding that a Buy America waiver is appropriate for the use of non-domestic Steel Pipe; A53 Grade B, 26″ OD, 0.375″ wall for construction of a Recovery Act project on SR 60, Section A40, in Allegheny County, Pennsylvania.

DATES: The effective date of the waiver is October 20, 2010.

FOR FURTHER INFORMATION CONTACT: For questions about this notice, please contact Mr. Gerald Yakowenko, FHWA Office of Program Administration, (202) 366–1562, or via e-mail at *gerald.yakowenko@dot.gov.* For legal questions, please contact Mr. Michael Harkins, FHWA Office of the Chief Counsel, (202) 366–4928, or via e-mail at *michael.harkins@dot.gov.* Office hours for the FHWA are from 7:45 a.m. to 4:15 p.m., est., Monday through Friday, except Federal holidays.

SUPPLEMENTARY INFORMATION:

Electronic Access

An electronic copy of this document may be downloaded from the **Federal Register**'s home page at: *http://www.archives.gov* and the Government Printing Office's database at: *http://www.access.gpo.gov/nara.*

Background

The FHWA's Buy America policy in 23 CFR 635.410 requires a domestic manufacturing process for any steel or iron products (including protective coatings) that are permanently incorporated in a Federal-aid construction project. The regulation also provides for a waiver of the Buy America requirements when the application would be inconsistent with the public interest or when satisfactory quality domestic steel and iron products are not sufficiently available. This notice provides information regarding the FHWA's finding that a Buy America waiver is appropriate to use non-domestic Steel Pipe; A53 Grade B, 26″ OD, 0.375″ wall for a portion of sign support structure No. S–28760 proposed for Recovery Act project on SR 60 in Alleghany County, PA.

In accordance with Division A, section 123 of the "Consolidated Appropriations Act, 2010″ (Pub. L. 111–117), the FHWA published a notice of intent to issue a waiver on its Web site Steel Pipe; A53 Grade B, 26″ OD, 0.375″ wall (*http://www.fhwa.dot.gov/construction/contracts/waivers.cfm?id=51*) on July 16th. The FHWA received five comments in response to the publication. The five comments suggested different domestic manufacturers of Steel Pipe; A53 Grade B and opposed the approval of the waiver request. The PennDOT contacted the potential domestic manufactures Berg Steel Corporation, McJunkin Red Man Corporation, and Trinity Prod. Berg Steel corporation stated that they do not have inventory in the pipe size requested. McJunkin Red Man Corporation responded that their pipe size is only 24″ OD and not up to 26″ OD. Trinity Prod. indicated that it can make the pipe size up to 26″ OD, but the required quantity is less than 600 tons which is required to establish a production run. During the 15-day comment period, the FHWA conducted additional nationwide review to locate potential domestic manufacturers for a Steel Pipe; A53 Grade B, 26″ OD, 0.375″ wall. Based on all the information available to the agency, the FHWA concludes that there are no domestic manufacturers of Steel Pipe; A53 Grade B, 26″ OD, 0.375″ wall. Given the lack of current availability for domestic steel for this particular application, the FHWA has discussed the need for PennDOT to consider alternate designs using domestic steel on future Federal-aid projects.

In accordance with the provisions of section 117 of the Safe, Accountable, Flexible, Efficient Transportation Equity Act: A Legacy for Users Technical Corrections Act of 2008 (Pub. L. 110–244, 122 Stat. 1572), the FHWA is providing this notice as its finding that a waiver of Buy America requirements is appropriate. The FHWA invites public comment on this finding for an additional 15 days following the effective date of the finding. Comments may be submitted to the FHWA's Web site via the link provided to the Pennsylvania waiver page noted above.

Authority: 23 U.S.C. 313; Pub. L. 110–161, 23 CFR 635.410.

Issued on: October 7, 2010.

Victor M. Mendez,

Federal Highway Administrator.

[FR Doc. 2010–26299 Filed 10–18–10; 8:45 am]

BILLING CODE 4910–22–P

DEPARTMENT OF TRANSPORTATION

Federal Motor Carrier Safety Administration

[FMCSA Docket No. FMCSA–2010–0247]

Qualification of Drivers; Exemption Applications; Diabetes Mellitus

AGENCY: Federal Motor Carrier Safety Administration (FMCSA), DOT.

ACTION: Notice of final disposition.

SUMMARY: FMCSA announces its decision to exempt thirty-five individuals from its rule prohibiting persons with insulin-treated diabetes mellitus (ITDM) from operating commercial motor vehicles (CMVs) in interstate commerce. The exemptions will enable these individuals to operate CMVs in interstate commerce.

DATES: The exemptions are effective October 19, 2010. The exemptions expire on October 19, 2012.

FOR FURTHER INFORMATION CONTACT: Dr. Mary D. Gunnels, Director, Medical Programs, (202) 366–4001, *fmcsamedical@dot.gov,* FMCSA, Room W64–224, Department of

Transportation, 1200 New Jersey Avenue, SE., Washington, DC 20590–0001. Office hours are from 8:30 a.m. to 5 p.m., Monday through Friday, except Federal holidays.

SUPPLEMENTARY INFORMATION:

Electronic Access

You may see all the comments online through the Federal Document Management System (FDMS) at: *http://www.regulations.gov.*

Docket: For access to the docket to read background documents or comments, go to *http://www.regulations.gov* and/or Room W12–140 on the ground level of the West Building, 1200 New Jersey Avenue, SE., Washington, DC, between 9 a.m. and 5 p.m., Monday through Friday, except Federal holidays.

Privacy Act: Anyone may search the electronic form of all comments received into any of DOT's dockets by the name of the individual submitting the comment (or of the person signing the comment, if submitted on behalf of an association, business, labor union, or other entity). You may review DOT's Privacy Act Statement for the Federal Docket Management System (FDMS) published in the **Federal Register** on January 17, 2008 (73 FR 3316), or you may visit *http://edocket.access.gpo.gov/2008/pdf/E8-785.pdf.*

Background

On August 27, 2010, FMCSA published a notice of receipt of Federal diabetes exemption applications from thirty-five individuals and requested comments from the public (75 FR 52813). The public comment period closed on September 27, 2010 and no comments were received.

FMCSA has evaluated the eligibility of the thirty-five applicants and determined that granting the exemptions to these individuals would achieve a level of safety equivalent to, or greater than, the level that would be achieved by complying with the current regulation 49 CFR 391.41(b)(3).

Diabetes Mellitus and Driving Experience of the Applicants

The Agency established the current standard for diabetes in 1970 because several risk studies indicated that drivers with diabetes had a higher rate of crash involvement than the general population. The diabetes rule provides that "A person is physically qualified to drive a commercial motor vehicle if that person has no established medical history or clinical diagnosis of diabetes mellitus currently requiring insulin for control" (49 CFR 391.41(b)(3)).

FMCSA established its diabetes exemption program, based on the Agency's July 2000 study entitled "A Report to Congress on the Feasibility of a Program to Qualify Individuals with Insulin-Treated Diabetes Mellitus to Operate in Interstate Commerce as Directed by the Transportation Act for the 21st Century." The report concluded that a safe and practicable protocol to allow some drivers with ITDM to operate CMVs is feasible. The September 3, 2003 (68 FR 52441) **Federal Register** notice in conjunction with the November 8, 2005 (70 FR 67777) **Federal Register** notice provides the current protocol for allowing such drivers to operate CMVs in interstate commerce.

These thirty-five applicants have had ITDM over a range of 1 to 32 years. These applicants report no severe hypoglycemic reactions resulting in loss of consciousness or seizure, requiring the assistance of another person, or resulting in impaired cognitive function that occurred without warning symptoms, in the past 12 months and no recurrent (2 or more) severe hypoglycemic episodes in the past 5 years. In each case, an endocrinologist verified that the driver has demonstrated a willingness to properly monitor and manage his/her diabetes mellitus, received education related to diabetes management, and is on a stable insulin regimen. These drivers report no other disqualifying conditions, including diabetes-related complications. Each meets the vision standard at 49 CFR 391.41(b)(10).

The qualifications and medical condition of each applicant were stated and discussed in detail in the August 27, 2010, **Federal Register** notice and they will not be repeated in this notice.

Discussion of Comment

FMCSA did not receive any comments in this proceeding.

Basis for Exemption Determination

Under 49 U.S.C. 31136(e) and 31315, FMCSA may grant an exemption from the diabetes standard in 49 CFR 391.41(b)(3) if the exemption is likely to achieve an equivalent or greater level of safety than would be achieved without the exemption. The exemption allows the applicants to operate CMVs in interstate commerce.

To evaluate the effect of these exemptions on safety, FMCSA considered medical reports about the applicants' ITDM and vision, and reviewed the treating endocrinologists' medical opinion related to the ability of the driver to safely operate a CMV while using insulin.

Consequently, FMCSA finds that in each case exempting these applicants from the diabetes standard in 49 CFR 391.41(b)(3) is likely to achieve a level of safety equal to that existing without the exemption.

Conditions and Requirements

The terms and conditions of the exemption will be provided to the applicants in the exemption document and they include the following: (1) That each individual submit a quarterly monitoring checklist completed by the treating endocrinologist as well as an annual checklist with a comprehensive medical evaluation; (2) that each individual reports within 2 business days of occurrence, all episodes of severe hypoglycemia, significant complications, or inability to manage diabetes; also, any involvement in an accident or any other adverse event in a CMV or personal vehicle, whether or not it is related to an episode of hypoglycemia; (3) that each individual provide a copy of the ophthalmologist's or optometrist's report to the medical examiner at the time of the annual medical examination; and (4) that each individual provide a copy of the annual medical certification to the employer for retention in the driver's qualification file, or keep a copy in his/her driver's qualification file if he/she is self-employed. The driver must also have a copy of the certification when driving, for presentation to a duly authorized Federal, State, or local enforcement official.

Conclusion

Based upon its evaluation of the thirty-five exemption applications, FMCSA exempts, Eric A. Anderson, Leslie R. Auger, Charlie L. Beach, James R. Beals, Craig G. Benson, Gary G. Bland, Juan E. Boyd, Stanley A. Brown, Bradley R. Burns, Leo G. Dinero, Matthew A. Donaldson, Francisco Espinoza, Terry W. Ferguson, Thomas G. Flanagan, Stacey W. Fortner, Donald K. Fraase, David W. Fraunberger, Jason W. Geier, Howard W. Girvin, Scott R. Grange, John A. Hayes, Bradley D. Heagel, Richard P. Holmen, Richard A. Homstad, John R. Johnson, Johnny O. Laws, Sr., Harold A. Meeker, Jr., Ronald D. Olson, Maria C. Paraschivescu, Paul S. Perry, Michael Pittman, Israel Ramos, Todd E. Rowley, Daniel E. Velasco and Joshua R. Wiery from the ITDM standard in 49 CFR 391.41(b)(3), subject to the conditions listed under "Conditions and Requirements" above.

In accordance with 49 U.S.C. 31136(e) and 31315 each exemption will be valid for two years unless revoked earlier by FMCSA. The exemption will be revoked

if: (1) The person fails to comply with the terms and conditions of the exemption; (2) the exemption has resulted in a lower level of safety than was maintained before it was granted; or (3) continuation of the exemption would not be consistent with the goals and objectives of 49 U.S.C. 31136(e) and 31315. If the exemption is still effective at the end of the 2-year period, the person may apply to FMCSA for a renewal under procedures in effect at that time.

Issued on: October 13, 2010.

Larry W. Minor,

Associate Administrator for Policy and Program Development.

[FR Doc. 2010–26294 Filed 10–18–10; 8:45 am]

BILLING CODE 4910–EX–P

DEPARTMENT OF TRANSPORTATION

Federal Motor Carrier Safety Administration

[Docket No. FMCSA–2000–7165; FMCSA–2006–24783; FMCSA–2008–0106; FMCSA–2008–0231; FMCSA–2008–0266]

Qualification of Drivers; Exemption Applications; Vision

AGENCY: Federal Motor Carrier Safety Administration (FMCSA), DOT.

ACTION: Notice of renewal of exemptions; request for comments.

SUMMARY: FMCSA announces its decision to renew the exemptions from the vision requirement in the Federal Motor Carrier Safety Regulations for 17 individuals. FMCSA has statutory authority to exempt individuals from the vision requirement if the exemptions granted will not compromise safety. The Agency has concluded that granting these exemption renewals will provide a level of safety that is equivalent to, or greater than, the level of safety maintained without the exemptions for these commercial motor vehicle (CMV) drivers.

DATES: This decision is effective October 22, 2010. Comments must be received on or before November 18, 2010.

ADDRESSES: You may submit comments bearing the Federal Docket Management System (FDMS) Docket ID FMCSA–2000–7165; FMCSA–2006–24783; FMCSA–2008–0106; FMCSA–2008–0231; FMCSA–2008–0266, using any of the following methods.

- *Federal eRulemaking Portal:* Go to *http://www.regulations.gov.* Follow the on-line instructions for submitting comments.
- *Mail:* Docket Management Facility; U.S. Department of Transportation, 1200 New Jersey Avenue, SE., West Building Ground Floor, Room W12–140, Washington, DC 20590–0001.
- *Hand Delivery or Courier:* West Building Ground Floor, Room W12–140, 1200 New Jersey Avenue, SE., Washington, DC, between 9 a.m. and 5 p.m., Monday through Friday, except Federal Holidays.
- *Fax:* 1–202–493–2251.

Instructions: Each submission must include the Agency name and the docket number for this notice. Note that DOT posts all comments received without change to *http://www.regulations.gov,* including any personal information included in a comment. Please see the Privacy Act heading below.

Docket: For access to the docket to read background documents or comments, go to *http://www.regulations.gov* at any time or Room W12–140 on the ground level of the West Building, 1200 New Jersey Avenue, SE., Washington, DC, between 9 a.m. and 5 p.m., Monday through Friday, except Federal holidays. The Federal Docket Management System (FDMS) is available 24 hours each day, 365 days each year. If you want acknowledgment that we received your comments, please include a self-addressed, stamped envelope or postcard or print the acknowledgement page that appears after submitting comments on-line.

Privacy Act: Anyone may search the electronic form of all comments received into any of our dockets by the name of the individual submitting the comment (or of the person signing the comment, if submitted on behalf of an association, business, labor union, etc.). You may review DOT's Privacy Act Statement for the FDMS published in the **Federal Register** on January 17, 2008 (73 FR 3316), or you may visit *http://edocket.access.gpo.gov/2008/pdf/E8-785.pdf.*

FOR FURTHER INFORMATION CONTACT: Dr. Mary D. Gunnels, Director, Medical Programs, (202) 366–4001, *fmcsamedical@dot.gov,* FMCSA, Department of Transportation, 1200 New Jersey Avenue, SE., Room W64–224, Washington, DC 20590–0001. Office hours are from 8:30 a.m. to 5 p.m. Monday through Friday, except Federal holidays.

SUPPLEMENTARY INFORMATION:

Background

Under 49 U.S.C. 31136(e) and 31315, FMCSA may renew an exemption from the vision requirements in 49 CFR 391.41(b)(10), which applies to drivers of CMVs in interstate commerce, for a two-year period if it finds "such exemption would likely achieve a level of safety that is equivalent to, or greater than, the level that would be achieved absent such exemption." The procedures for requesting an exemption (including renewals) are set out in 49 CFR part 381.

Exemption Decision

This notice addresses 17 individuals who have requested renewal of their exemptions in accordance with FMCSA procedures. FMCSA has evaluated these 17 applications for renewal on their merits and decided to extend each exemption for a renewable two-year period. They are:

Rick A. Benevides
Allen S. Bush
Delone W. Dudley
Irvin L. Eaddy
James W. Lappan
Jeromy W. Leatherman
Ernest B. Martin
Mark L. McWhorter
Raymond C. Miller
James G. Mitchell
Dennis E. Palmer, Jr.
John E. Rains
Sylvester Silver
James D. St. Peter
Kenneth C. Steele
Michael Sutton
Brian W. Whitmer

The exemptions are extended subject to the following conditions: (1) That each individual has a physical examination every year (a) by an ophthalmologist or optometrist who attests that the vision in the better eye continues to meet the standard in 49 CFR 391.41(b)(10), and (b) by a medical examiner who attests that the individual is otherwise physically qualified under 49 CFR 391.41; (2) that each individual provides a copy of the ophthalmologist's or optometrist's report to the medical examiner at the time of the annual medical examination; and (3) that each individual provide a copy of the annual medical certification to the employer for retention in the driver's qualification file and retains a copy of the certification on his/her person while driving for presentation to a duly authorized Federal, State, or local enforcement official. Each exemption will be valid for two years unless rescinded earlier by FMCSA. The exemption will be rescinded if: (1) The person fails to comply with the terms and conditions of the exemption; (2) the exemption has resulted in a lower level of safety than was maintained before it was granted; or (3) continuation of the exemption would not be consistent with the goals and objectives of 49 U.S.C. 31136(e) and 31315.

Basis for Renewing Exemptions

Under 49 U.S.C. 31315(b)(1), an exemption may be granted for no longer than two years from its approval date and may be renewed upon application for additional two year periods. In accordance with 49 U.S.C. 31136(e) and 31315, each of the 17 applicants has satisfied the entry conditions for obtaining an exemption from the vision requirements (65 FR 33406; 65 FR 57234; 67 FR 57266; 69 FR 52741; 71 FR 53489; 73 FR 65009; 73 FR 63047; 71 FR 32183; 71 FR 41310; 73 FR 65009; 73 FR 61927; 73 FR 35194; 73 FR 63047; 73 FR 46973; 73 FR 54888; 73 FR 51689). Each of these 17 applicants has requested renewal of the exemption and has submitted evidence showing that the vision in the better eye continues to meet the standard specified at 49 CFR 391.41(b)(10) and that the vision impairment is stable. In addition, a review of each record of safety while driving with the respective vision deficiencies over the past two years indicates each applicant continues to meet the vision exemption standards. These factors provide an adequate basis for predicting each driver's ability to continue to drive safely in interstate commerce. Therefore, FMCSA concludes that extending the exemption for each renewal applicant for a period of two years is likely to achieve a level of safety equal to that existing without the exemption.

Request for Comments

FMCSA will review comments received at any time concerning a particular driver's safety record and determine if the continuation of the exemption is consistent with the requirements at 49 U.S.C. 31136(e) and 31315. However, FMCSA requests that interested parties with specific data concerning the safety records of these drivers submit comments by November 18, 2010.

FMCSA believes that the requirements for a renewal of an exemption under 49 U.S.C. 31136(e) and 31315 can be satisfied by initially granting the renewal and then requesting and evaluating, if needed, subsequent comments submitted by interested parties. As indicated above, the Agency previously published notices of final disposition announcing its decision to exempt these 17 individuals from the vision requirement in 49 CFR 391.41(b)(10). The final decision to grant an exemption to each of these individuals was made on the merits of each case and made only after careful consideration of the comments received to its notices of applications. The notices of applications stated in detail the qualifications, experience, and medical condition of each applicant for an exemption from the vision requirements. That information is available by consulting the above cited **Federal Register** publications.

Interested parties or organizations possessing information that would otherwise show that any, or all, of these drivers are not currently achieving the statutory level of safety should immediately notify FMCSA. The Agency will evaluate any adverse evidence submitted and, if safety is being compromised or if continuation of the exemption would not be consistent with the goals and objectives of 49 U.S.C. 31136(e) and 31315, FMCSA will take immediate steps to revoke the exemption of a driver.

Issued on: October 13, 2010.

Larry W. Minor,

Associate Administrator for Policy and Program Development.

[FR Doc. 2010–26300 Filed 10–18–10; 8:45 am]

BILLING CODE 4910–EX–P

DEPARTMENT OF TRANSPORTATION

Federal Highway Administration

Value Pricing Pilot Program Participation, Fiscal Years 2010 and 2011

AGENCY: Federal Highway Administration (FHWA), DOT.

ACTION: Notice; solicitation for participation.

SUMMARY: This notice invites States, along with their local government partners and other public authorities, to apply to participate in the Value Pricing Pilot (VPP) program and presents guidelines for program applications for fiscal years (FY) 2010 and 2011. The notice seeks applications for a variety of types of transportation pricing studies and implementation projects.

DATES:

1. Applications for tolling authority only may be submitted at any time, however, it is recommended that applicants first submit an Expression of Interest, as detailed in the "Who is Eligible to Apply" section of this notice, to allow FHWA to guide applicants in determining whether the VPP program, or another program, is the preferable program under which to apply for such authority.

2. Formal grant applications, however, must be submitted no later than January 18, 2011, to be assured consideration.

3. For grant applications, applicants may also submit an optional "sketch" or draft proposal by December 3, 2010, which FHWA will review and provide feedback on for the applicant to use in its formal grant application. Sketch or draft proposals received after this date may still be reviewed by and commented upon by FHWA at its discretion.

4. For grant applications that had been submitted under the August 5, 2009, (74 FR 39138) solicitation that were not funded (for a list of projects funded from that solicitation, see: *http://www.fhwa.dot.gov/pressroom/fhwa1029.htm*), and where such applications would still be eligible for funding under the criteria provided by this notice, applicants may submit a letter to the Department by November 18, 2010, requesting comments on their previous applications.

Application Submission: Grant applications may be submitted through *http://www.grants.gov*. Applications for tolling authority only should be submitted through an expression of interest at the following Web site: *http://ops.fhwa.dot.gov/tolling_pricing/participation.htm.*

FOR FURTHER INFORMATION CONTACT: For questions about or to provide information to FHWA that responds to this notice, such as to submit a letter or sketch plan, or for general questions related to the VPP program, please contact Ms. Angela Jacobs, FHWA Office of Operations, at (202) 366–0076, *angela.jacobs@dot.gov.* For technical questions related to the development of pricing projects involving tolls, please also contact Ms. Angela Jacobs, or contact Mr. Patrick DeCorla-Souza, FHWA Office of Innovative Program Delivery, at (202) 366–4076, *patrick.decorla-souza@dot.gov.* For technical questions related to the development of pricing projects not involving tolls, please contact Mr. Allen Greenberg, FHWA Office of Operations, at (202) 366–2425, *allen.greenberg@dot.gov.* For legal questions, please contact Mr. Michael Harkins, FHWA Office of the Chief Counsel, at (202) 366–4928, *michael.harkins@dot.gov.*

SUPPLEMENTARY INFORMATION:

Electronic Access

An electronic copy of this document may be downloaded from the **Federal Register**'s home page at: *http://www.archives.gov* and the Government Printing Office's database at: *http://www.access.gpo.gov/nara.*

Background

Section 1012(b) of the Intermodal Surface Transportation Efficiency Act (ISTEA) (Pub. L. 102–240; 105 Stat. 1914), as amended by section 1216(a) of the Transportation Equity Act (TEA–21) (Pub. L. 105–178; 112 Stat. 107), and section 1604(a) of the Safe, Accountable, Flexible, Efficient Transportation Equity Act: A Legacy for Users (SAFETEA–LU) (Pub. L. 109–59; 119 Stat. 1144), authorizes the Secretary of Transportation (the Secretary) to create a VPP program. Value pricing encompasses a variety of strategies to manage congestion on highways, including tolling of highway facilities through congestion pricing, as well as other strategies that do not involve tolls, such as mileage-based car insurance and parking pricing. The congestion pricing concept of charging variable fees based upon usage and assessing relatively higher prices for travel during peak periods is the same as that used in many other sectors of the economy to respond to peak-use demands. For example, airlines, hotels, and theaters often charge more at peak periods than at non-peak periods.

According to the statutory requirements of the VPP program, FHWA may enter into cooperative agreements with up to 15 State or local governments or other public authorities (henceforth referred to only as "States") to establish, maintain, and monitor VPP programs, each including an unlimited number of projects. The FHWA invites interested States to apply to participate in the VPP program for funds remaining from FY 2010 and provided in FY 2011. While direct submissions by local governments and public authorities are allowable under SAFETEA–LU, FHWA strongly prefers applications to be submitted through State departments of transportation, since that would allow the potential for multiple VPP program projects within a State counting as only 1 of the 15 allowable partnerships.

To comply with the statutory cap on the number of partnering States and other public authorities in a manner that maximizes program participation, FHWA will only consider an "active" cooperative agreement sufficient to hold 1 of the 15 available VPP program slots, as also noted in both the September 16, 2008, and August 5, 2009, notices for VPP program participation (73 FR 53478 and 74 FR 39138, respectively). An agreement will be considered "active" by FHWA under either of the following two conditions: (1) During the period of time between when a cooperative funding agreement for a project or projects has been signed and when the project or projects has or have been completed, and (2) if VPP program tolling authority has been granted and is still needed to toll a new or existing highway. Absent one or both of these conditions being met, an agreement will not be considered active for the purposes of the VPP program. If progress in moving forward to use its VPP program funding or tolling authority is unsatisfactory, FHWA may withdraw its approval for inactive agreements in favor of other applicants seeking to obtain VPP program funding or tolling authority.

Congress authorized $12 million for FY 2010 to be made available to carry out the VPP program, and, as of the date of this notice, Congress has also authorized $3 million for FY 2011 for this same purpose. Congress may subsequently choose to authorize additional funds beyond the $3 million for FY 2011. Of the funds that Congress makes available for the VPP program in any fiscal year, at least 25 percent must, according to statute, be spent for projects that do not involve highway tolls. The FHWA most recently solicited for applications for what remained of FY 2009 funds and for FY 2010 funds in an August 5, 2009, **Federal Register** notice (74 FR 39138). On August 2, 2010, the FHWA announced the awarding of 10 grants totaling $9,768,000, some of which came from FY 2009 funds and, after such funds were exhausted, the rest from FY 2010 funds. After these grants were awarded, and considering the new funds Congress has made available for FY 2011, at least $10.5 million is being made available under this solicitation. If Congress does provide additional VPP program funds for FY 2011 beyond what it has already provided, it is FHWA's intention to subsequently award these funds based upon responses to this solicitation, if merited by the applications that are received.

The Federal share payable under the VPP program is up to 80 percent of the cost of the project. Funds allocated by the Secretary to a State under this section shall remain available for obligation by the State for a period of 3 years after the last day of the fiscal year for which funds are authorized. If, on September 30 of any year, the amount of funds made available for the VPP program, but not allocated, exceeds $8 million, the excess amount will, to comply with the statutory requirements of the VPP program, be apportioned to all States as Surface Transportation Program funds.

Funds available for the VPP program can be used to support pre-implementation study activities as well as to pay for pricing-specific implementation costs of value pricing projects. Pursuant to section 1012(b)(2) of ISTEA, FHWA may not fund pre-implementation or implementation costs for more than 3 years. Also, section 1012(b)(6) of ISTEA provides that a State may permit vehicles with fewer than two occupants to operate in high occupancy vehicle (HOV) lanes if the vehicles are part of a local VPP program under this section. In addition to this authority under the VPP program, 23 U.S.C. 166 authorizes States to convert HOV lanes into high occupancy toll (HOT) lanes in which vehicles without the number of occupants required for HOV status are permitted to use an HOV lane if such vehicles are charged a toll. Since the authority to establish and operate a HOT lane (including HOT lanes on the Interstate System) is no longer experimental and has been mainstreamed in 23 U.S.C. 166, the provisions of 23 U.S.C. 166 will generally be used for HOT projects in order to more effectively allocate VPP funds and program slots.

Pursuant to section 1012(b)(7) of ISTEA, the potential financial effects of value pricing projects on low-income drivers shall be considered. Where such effects are expected to be both negative and significant, possible mitigation measures should be identified, such as providing new or expanded transit service as an integral part of the value pricing project, toll discounts or credits for low-income motorists who do not have viable transit options, or fare or toll credits earned by motorists by use of regular lanes which can be used to pay for tolls on priced lanes. Additional measures include methods to facilitate convenient cash payment by those who do not have bank accounts or credit cards, or who choose not to tie their toll accounts to their bank accounts or credit cards. Mitigation measures can be included as part of the value pricing project implementation costs.

Also, section 1012(b)(6) of ISTEA requires the Secretary to monitor the effect of value pricing programs for a period of at least 10 years and report to Congress every 2 years on the effects such programs are having on driver behavior, traffic volume, transit ridership, air quality, and availability of funds for transportation programs. Project partners will be expected to assist FHWA by providing data on their programs for use in these reports throughout the length of the monitoring and reporting period.

In addition to the VPP program, other authorities are available that permit States to use tolling to finance highway

construction and reconstruction, promote efficiency in the use of highways, and support congestion reduction. Expanded flexibility to toll is provided under the following programs: HOV-to-HOT Conversion Program (23 U.S.C. 166); Interstate System Reconstruction and Rehabilitation Pilot Program; Interstate System Construction Toll Pilot Program; Express Lanes Demonstration Program; and Section 129 toll agreements. For more information on these programs, please refer to the notice in the January 6, 2006, **Federal Register** entitled, "SAFETEA–LU; Opportunities for State and Other Qualifying Agencies to Gain Authority to Toll Facilities Constructed Using Federal Funds" (71 FR 965).

Applicable Terms

"Value pricing" and "congestion pricing" refer to direct and transparent charges for vehicle use and parking, as well as variable charges for road use, possibly fluctuating based upon location, time of day, severity of congestion, vehicle occupancy, or type of facility. By shifting some trips to off-peak periods, to mass transit or other higher-occupancy vehicles, to non-motorized modes, or to alternative routes away from priced facilities, or by encouraging consolidation of trips, congestion pricing promotes economic efficiency. It also helps achieve congestion reduction, reductions in greenhouse gas emissions, improved air quality, energy conservation, transit ridership, and revenue generation goals.

A "value pricing project" means any pre-implementation activities or implementation of congestion pricing concepts or techniques included under a State or local "value pricing pilot program." A State is considered to have a VPP program if it has one or more approved value pricing projects. While the distinction between "project" and "program" may appear to be merely a technical one, it is significant in that, as described in the "Background" section of this notice, the number of total VPP programs is statutorily limited to 15, while there is no limit to the number of VPP projects allowed under each VPP program.

A "value pricing program" means the combination of all value pricing projects within a State or local government or public authority. Any State or local government or public authority with a cooperative agreement for a value pricing program is deemed to have a value pricing program.

"Cooperative agreement" means the agreement signed between the FHWA and a public agency to establish and implement value pricing pilot projects.

"Toll agreement" means the agreement signed between the FHWA and a State and/or local government or public authority to provide for the statutorily authorized uses of toll revenues. At FHWA's discretion, the toll agreement may be subsumed within the cooperative agreement.

Program Objective

The overall objective of the VPP program is to support efforts by State and local governments or other public authorities to establish local VPP programs, to provide for the execution, monitoring, and evaluation of value pricing projects included in such programs, and to report on these effects. The effects of interest include impacts on congestion, travel behavior, traffic volumes, transit ridership, air quality, and funding for transportation improvements. The FHWA is seeking applications for funding and/or tolling authority to use congestion pricing to reduce congestion, improve system performance, and advance the Department's priorities of growing the economy, enhancing livability, and promoting environmental sustainability. All proposals should incorporate significant pricing mechanisms that are designed to substantially advance these objectives.

This notice seeks applications focused on less tested, innovative strategies that advance pricing in furtherance of FHWA's livability, sustainability, and other goals. An objective of this solicitation is to provide incentive grants to expand the number of metropolitan areas that are developing innovative approaches that advance congestion pricing.

Some non-toll pricing applications, such as carsharing, have already proven their success and are in wide use, and thus do not require VPP program funding for their success to be sustained. Deployment of other non-toll pricing strategies, such as pricing of parking meters to achieve a certain parking space utilization level, are much newer in the U.S., but the advancement of such strategies has already secured substantial funding under the VPP and other programs (e.g., in San Francisco), and thus other non-tolling strategies, discussed below, will instead receive priority consideration under this solicitation.

For both tolling and non-tolling projects, FHWA is interested in tests that advance the state of the practice in behavioral economics. Specifically, applications are sought that strive to improve the understanding of the ways that the structure, timing and salience of pricing, and how payments themselves are handled, affect responses to pricing.

Types of Projects Being Sought That Do Not Involve Tolls

The FHWA is especially interested in grant applications for projects that do not involve highway tolls. As discussed earlier, SAFETEA–LU sets aside a minimum of 25 percent of VPP program funds for such projects and FHWA may choose to make available more of the VPP program funds for this purpose. The FHWA in particular seeks tests of non-toll pricing strategies that will substantially improve livability in an area and advance environmental sustainability in a major way, either directly through the benefits the project itself brings, or by demonstrating especially promising strategies such that their implementation will likely be replicated broadly.

Examples of strategies that FHWA believes would meet this test include: (1) Pay-per-mile or pay-per-minute car insurance, where insurance premiums are converted from an annual or bi-annual charging scheme to one that is instead based primarily on miles or minutes of driving (with rates that still reflect actuarial risks and the coverages that are selected); and (2) highly innovative parking pricing strategies, provided that the level and coverage of parking charges is sufficient to bring about substantial and measurable reductions in congestion. For pay-per-mile or pay-per-minute insurance, FHWA is especially interested in applications that cover areas not included in previous VPP program-funded projects, such as actuarial studies of the potential benefits of pay-as-you-drive pricing models, tests of previously untested pricing protocols, and explorations of pricing approaches that utilize both mileage or time in operation and other usage-based factors that would affect per-mile or per-minute claims' risks. For parking pricing, FHWA seeks applications for: (1) Citywide surcharges for entering or exiting parking facilities during or near peak travel periods; and (2) parking cash-out, where a city or State passes, and then requests financial support to implement, a local ordinance or State law requiring employers to offer cash to their employees in lieu of subsidized parking, or provides substantial incentives for employers to offer such cash-out options. As mentioned above, pricing of parking meters to influence parking space utilization levels has already received substantial funding and will receive lower priority in considering grant applications.

Applications are also encouraged that utilize appropriate technologies and provide sufficient participation incentives to deploy dynamic ridesharing (flexible, single-trip carpooling) with the necessary critical mass of users to succeed. To be considered eligible, dynamic ridesharing applications must be coupled with some transportation pricing, such as parking pricing or direct financial incentives for ridesharing, thereby expanding affordable transportation options while mitigating equity issues associated with pricing.

Pre-Implementation Studies

The intent of the pre-implementation study phase is to support efforts to identify and evaluate value pricing project alternatives, and to prepare the necessary groundwork for relatively near-term implementation. The FHWA will not fund purely academic studies of congestion pricing, or studies that involve major expansions of existing facilities, or areawide or regionwide planning studies covering many topics besides pricing and incorporating congestion pricing only as one of a number of options. Such studies may be funded with regular Federal-aid highway or transit planning funds. Applications for pre-implementation studies will be evaluated based on the likelihood that they will lead to relatively near-term implementation of congestion pricing conforming to the objectives described in the section on Program Objectives.

Project Costs Eligible for Grant Funding

The FHWA will provide up to the statutorily allowable 80 percent share of the estimated costs of an approved project. Funds available for the VPP program can be used to support pre-implementation study activities and also to pay for implementation costs of value pricing projects. Costs of planning for, setting up, managing, operating, monitoring, evaluating, and reporting on local congestion pricing pilot projects are eligible for reimbursement, but neither pre-implementation study costs nor implementation costs may be reimbursed for longer than 3 years. The 3-year funding limitation will begin on the date of the first disbursement of Federal funds for project activities. Examples of specific pre-implementation and implementation costs eligible for reimbursement include the following:

1. *Pre-Implementation Study Costs*—Covered activities include those for foundation building, such as public participation, consensus building and marketing, modeling, and technology assessments.

2. *Implementation Costs*—Allowable costs for reimbursement under this area include those for setting up, managing, operating, evaluating, and reporting on a value pricing project, including:

a. Necessary salaries and expenses, or other administrative and operational costs, such as installation of equipment for operation of a pilot project, costs of monitoring and evaluating project operations, and costs of continuing public relations activities during the period of implementation;

b. Mitigation measures to deal with any potential adverse financial effects on low-income drivers, per section 1012(b)(7) of ISTEA as amended, including costs of providing transportation alternatives, such as new or expanded transit or ridesharing services provided as an integral part of the value pricing project. Funds are not available to replace existing sources of support for these services.

Project implementation costs can be supported until such time that sufficient revenues are being generated by the project to fund such activities without Federal support, but in no case for longer than 3 years. Each implementation project included in a VPP program will be considered separately for this purpose.

Funds may not be used to pay for activities conducted prior to approval for VPP program participation. Complementary actions, such as lane construction, the implementation of traffic control systems, or transit projects can be funded through other highway and transit programs under SAFETEA–LU and from new revenues raised as a result of a pilot. The VPP program applicants are encouraged to explore opportunities for combining VPP program funds with other funds. Federal funds may not, however, be used to match VPP program funds unless there is specific statutory authority to do so.

Eligible Uses of Toll Revenues

Section 1012(b)(2) of ISTEA as amended provides that toll revenues generated by any congestion pricing pilot project must be applied first to pay for pilot project operating costs. Any project revenues in excess of pilot project operating costs may, according to section 1012(b)(3) of ISTEA as amended, be used for any projects eligible under Title 23, U.S.C. A project's operating costs include, but are not limited to, any costs necessary for a project's execution; mitigation measures to deal with adverse financial effects on low-income drivers; the proper maintenance of the facility; any construction (including reconstruction, rehabilitation, restoration, or resurfacing) of the facility; any debt service incurred in implementing the project; and a reasonable return on investment by any private entity financing the project. States are encouraged to consider using excess toll revenue for projects designed to provide benefits to those traveling in the corridor where the project is being implemented.

For VPP toll implementation projects, FHWA and the public authority (including the State transportation department) having jurisdiction over a facility must enter into a cooperative agreement concerning the use of toll revenue to be generated under a value pricing project. The cooperative agreement will provide that the public authority use the revenues in accordance with the applicable statutory requirements. The execution of a cooperative agreement is necessary to the establishment of an implementation project under the VPP program, and will facilitate oversight of a State's compliance with revenue use requirements of the VPP program. Additionally, the toll collection system must meet FHWA requirements for interoperability at 23 CFR part 950.

Who is eligible to apply?

Qualified applicants for either tolling authority or grants (or both) include State or local governments or public authorities, such as toll agencies. Although project agreements must be with the aforementioned public entities, and preferably with State departments of transportation in order to preserve participation slots, a VPP program partnership may also include private tolling authorities, for-profit companies, and non-profit organizations.

In many cases where only tolling authority is being sought, it may be preferable to secure such authority through a Federal program other than the VPP program even if such authority could also be granted through the VPP program. This issue was covered in detail in a January 6, 2006, **Federal Register** notice covering non-grant tolling programs, which remains in effect. That notice was entitled "Safe, Accountable, Flexible, Efficient Transportation Equity Act: A Legacy for Users (SAFETEA–LU); Opportunities for States and Other Qualifying Agencies to Gain Authority to Toll Facilities Constructed Using Federal Funds" (71 FR 965). The notice established a process whereby applicants seeking only tolling authority from FHWA (not grant funding) were requested to first

submit an Expression of Interest document to allow FHWA to guide applicants in determining whether the VPP program, or another program, is the preferable program under which to apply for such authority. The Expression of Interest is a document—in letter, memo, or report format—that provides the rationale for funding or tolling authority and information about the intended project. A complete Expression of Interest will enable the DOT Tolling and Pricing Team to provide the best assistance and identify the range of options possible to meet intended goals and timeframes. For details, please see: *http://www.fhwa.dot.gov/ipd/revenue/road_pricing/tolling_pricing/index.htm.*

The Value Pricing Pilot Program Applications

Formal grant applications shall be submitted through Grants.gov at *http://www.grants.gov* by close of business January 18, 2011. Projects requesting tolling authority only should submit an Expression of Interest to FHWA. For details, see: *http://www.fhwa.dot.gov/ipd/revenue/road_pricing/tolling_pricing/index.htm.*

No particular format is required for tolling authority applications or grant applications, although specific information is requested in Grants.gov. Applications should include the following background information: (a) The name, title, e-mail address, and phone number of the person who will act as the point of contact on behalf of the requesting agency, authority, or authorities; (b) A description of the agency, authority, or authorities requesting funding and/or tolling authority; (c) A statement as to whether only funding, both funding and tolling authority, or only tolling authority via the VPP program is being sought to support either pre-implementation or implementation activities as permitted; and (d) A description of the public agency or agencies that will be responsible for operating, maintaining, and enforcing the tolling program, if applicable.

The core of the application should include the following:

1. A description of the congestion problem being addressed (current and projected);
2. A description of the proposed pricing program and its goals;
3. An identification and description of the facilities, systems, or area that will be covered;
4. Anticipated effects of the pricing program on reducing congestion, altering travel behavior, and encouraging the use of other transportation modes;
5. An identification of how the proposal addresses goals related to livability, sustainability, equity, congestion reduction, safety, and state of good repair as outlined in the Evaluation Criteria section below;
6. Preliminary estimates of the social and economic effects of the pricing program, including potential equity impacts, and a plan or methodology for further refining such estimates;
7. The role of alternative transportation modes in the project;
8. A description of the tasks to be carried out as part of each phase of the project;
9. A detailed project timeline broken down by tasks and phases;
10. An itemized budget broken down by task and funding year (*i.e.,* Year 1, Year 2, etc.), which is only required for grant applications;
11. Plans for monitoring and evaluating implementation projects, including plans for data collection and analysis, before and after assessment, and long-term monitoring and documenting of project effects;
12. A detailed finance and revenue plan, including (for implementation projects) a budget for capital and operating costs; a description of all funding sources, planned expenditures, and proposed uses of revenues; and a plan for projects to become financially self-sustaining (without Federal support) within 3 years of implementation, all of which is only required for grant applications;
13. A discussion of previous public involvement, including public meetings, in the development of the proposed pricing program; any expressions or declarations of support from State or local government officials or the public; future plans for involving key affected parties, coalition building, and media relations, and more broadly for ensuring adequate public involvement prior to implementation;
14. Plans for meeting all Federal, State, and local legal and administrative requirements for project implementation, including relevant Federal-aid planning and environmental requirements;
15. A description of how, if at all, any private entities are involved in the project, either in spending grant funds or in cost sharing or debt retirement associated with revenues; and
16. If tolling authority is sought, an explanation about how electronic toll collection project components will, if applicable, be compatible with other electronic toll collection systems in the region and allow motorists to pay toll charges incurred on any regional facility through a single account.

If some of these items are not available or fully developed at the time a formal application for grant funding is submitted, applications will still be considered for funding support if they meet the interests of FHWA and if there is a strong indication that these items will be completed within a short time.

VPP Program Process

A. Requests for Funding

To ensure that all projects receive fair and equal consideration for the limited available funds, FHWA requires formal grant applications to be submitted to *http://www.grants.gov* by close of business January 18, 2011 to be assured consideration for available FY 2010 and FY 2011 funds. Applicants may also submit an optional "sketch" or draft proposal, in a format selected by the applicant, to *angela.jacobs@dot.gov* by December 3, 2010, which FHWA will review and provide feedback on for the applicant to use in its formal grant application. Sketch or draft proposals received after this date may still be reviewed by and formally commented upon by FHWA at its discretion. For applications that had been submitted under the August 5, 2009, (74 FR 39138) solicitation that were not funded (for a list of projects funded from that solicitation, see: *http://www.fhwa.dot.gov/pressroom/fhwa1029.htm*), and where such applications would still be eligible for funding under the criteria provided by this notice, applicants may submit a letter to *angela.jacobs@dot.gov* at FHWA by November 18, 2010, requesting comments on their previous applications.

B. Projects for Which No Funds Are Requested

Although most projects under the VPP program involve program funds, some projects do not, and instead only seek tolling authority under the program. In such cases, and especially where a State is not already part of the VPP program, FHWA recommends that the public authority investigate the other opportunities to gain authority to toll that are listed in the notice in the January 6, 2006, **Federal Register**, entitled "SAFETEA–LU; Opportunities for State and Other Qualifying Agencies to Gain Authority to Toll Facilities Constructed Using Federal Funds" (71 FR 965).

C. Proposal Evaluation Criteria

All proposals will be evaluated based on these core outcome measures, with

pre-implementation proposals evaluated based upon their projected effects on these measures if they are later to lead to implementation:

Livability

To what extent will the project directly enhance livability by:

• Improving neighborhood design and facilitating compact form (*e.g.,* if parking pricing curtails demand, thus allowing alternative uses for land dedicated to surface parking).

To what extent will forecasted reductions in traffic make available:

• An opportunity for traffic calming and human-scale design enhancements.

• More road space to accommodate pedestrians and bicyclists by reducing the amount of road space needed to accommodate motor vehicles in motor vehicle travel lanes.

• Faster bus travel and better bus stop designs.

To what extent will revenue from pricing contribute to:

• Infrastructure costs for pedestrian and bicycle improvements.

• Transit infrastructure and operations.

• Ridesharing programs.

Sustainability

To what extent will forecasted reductions in traffic:

• Reduce greenhouse gas emissions, improve energy efficiency, and reduce dependence on fossil fuels.

• Reduce air, water, and noise pollution and damage to ecosystems.

• Support transit-oriented land development.

To what extent will revenue from pricing contribute to:

• Funding of a multimodal transportation system that meets the sustainability objectives listed immediately above.

Equity

To what extent will costs and benefits be distributed so that:

• Low-income travelers or other transportation disadvantaged groups pay less on average for their travel or have a better travel experience at the same cost.

To what extent will revenues be used to:

• Provide accommodations that are especially important to low-income travelers or other transportation disadvantaged groups.

To what extent are equity impacts mitigated so that:

• Concerns of low-income or other transportation disadvantaged groups are addressed.

Congestion Reduction

To what extent will forecasted reductions in traffic:

• Reduce traffic congestion and delay experienced by the freight sector.

• Reduce traffic congestion and delay experienced by personal travelers.

• Maximize economic return on existing investment by optimizing use of the existing transportation infrastructure.

To what extent will revenue from road pricing:

• Provide signals for where new multimodal transportation capacity (including transit, bike, pedestrian, ridesharing, *etc.*) is really needed and provide revenues to pay for it, while at the same time reducing the need for highway expansion.

Safety

To what extent will direct safety benefits be provided by:

• Shifts from driving alone to safer modes of travel.

• Reduced driving overall, and unsafe driving in particular, for example by rewarding drivers with reduced insurance premiums for cutting exposure to crashes and insurance claims.

To what extent will forecasted reductions in traffic:

• Reduce collisions, including secondary crashes caused by stalled traffic.

• Make more road space available to provide safer pedestrian and bicycle accommodations.

To what extent will revenue from pricing contribute to:

• Costs for roadway safety improvements.

• Costs for pedestrian and bicycle improvements.

State of Good Repair

To what extent will forecasted reductions in traffic:

• Reduce highway expansion needs thereby making more existing revenues available to repair, reconstruct and rehabilitate the existing system.

To what extent will revenue from pricing be used to:

• Repair, reconstruct, and rehabilitate the existing highway, transit, bikeway, and pedestrian systems.

In addition to these outcome-oriented goals, FHWA will also evaluate proposals based on the following criteria:

(1) The degree to which new, innovative value pricing approaches are included;

(2) The degree to which stakeholder groups, including (among others) business groups, environmental groups, and advocates for social equity, are involved in and supportive of the project, and the project is likely to win broad public support;

(3) The degree to which the project is likely to lead to relatively near-term implementation; and

(4) The degree to which it is demonstrated that the project is testing especially promising strategies such that their implementation will likely then be replicated broadly.

Post-Selection Process

If a proposal is approved, a formal cooperative agreement will be prepared between the FHWA and the State. The cooperative agreement will include a refined scope of work developed from the original funding application and subsequent discussions with FHWA. Federal statutes will govern the cooperative agreement. Regulations cited in the agreement, and 49 CFR Part 18, Uniform Administrative Requirements for Grants and Cooperative Agreements to State and Local Governments, will also apply. Each value pricing project must have a separate cooperative agreement. Although in the past the FHWA has allowed some States to have a master cooperative agreement that is subsequently amended for each approved project, in the future the FHWA will execute a separate agreement for each project. For value pricing projects that involve only toll authority and that do not involve requests for Federal funds, a cooperative agreement must still be executed.

Where the implementation of tolling is part of the VPP project, Federal tolling authority is required. To secure such authority for a VPP project, a cooperative agreement will be executed, regardless of whether VPP program funding is being provided. The cooperative agreement must include all of the information normally required as part of a tolling agreement (stipulating the terms of the tolling, providing details on the dispensation of revenues, *etc.*). A separate tolling agreement will generally not be required unless the FHWA determines that a separate agreement is the most efficient mechanism in light of the particular circumstances of the project. As discussed previously, revenues must generally first be used to cover the project's operating costs, including debt service, provide reasonable return on private party investments, and be used for the costs necessary to properly operate and maintain the facility. Any remaining revenues may then be used

for other Title 23, U.S.C. eligible purposes.

Where tolling authority is secured through a VPP program cooperative agreement, such an agreement will be signed by the Executive Director of FHWA. If tolling authority is not required, the cooperative agreement will be signed by the FHWA Division Administrator of the State Division Office. All cooperative agreements will be administered jointly by FHWA's Office of Operations and FHWA's State Division Office.

Other Requirements

Prior to FHWA approval of pricing project implementation, congestion pricing programs must be shown to be consistent with Federal metropolitan and statewide planning requirements (23 U.S.C. 134 and 135; and, if applicable, 49 U.S.C. 5303 and 5304).

Implementation projects involving tolls outside metropolitan areas must be included in the approved statewide transportation improvement program and be selected in accordance with the requirements set forth in section 1204(f)(3) of TEA–21.

Implementation projects involving tolls in metropolitan areas must be: (a) Included in, or consistent with, the approved metropolitan transportation plan (if the area is in nonattainment for a transportation-related pollutant, the metropolitan plan must be in conformance with the State air quality implementation plan); (b) included in the approved metropolitan and statewide transportation improvement programs (if the metropolitan area is in a nonattainment area for a transportation related pollutant, the metropolitan transportation improvement program must be in conformance with the State air quality implementation plan); (c) selected in accordance with the requirements in section 1203(h)(5) or (i)(2) of TEA–21; and (d) consistent with any existing congestion management system in Transportation Management Areas, developed pursuant to 23 U.S.C. 134(i)(3).

Authority: 23 U.S.C. 315; sec. 1216(a), Pub. L. 105–178, 112 Stat. 107; Pub. L. 109–59; 117 Stat. 1144.

Issued on: October 12, 2010.

Víctor M. Mendez,

Federal Highway Administrator.

[FR Doc. 2010–26298 Filed 10–18–10; 8:45 am]

BILLING CODE 4910–22–P

DEPARTMENT OF THE TREASURY

Submission for OMB Review; Comment Request

October 13, 2010.

The Department of the Treasury will submit the following public information collection requirements to OMB for review and clearance under the Paperwork Reduction Act of 1995, Public Law 104–13 on or after the date of publication of this notice. A copy of the submissions may be obtained by calling the Treasury Bureau Clearance Officer listed. Comments regarding these information collections should be addressed to the OMB reviewer listed and to the Treasury PRA Clearance Officer, Department of the Treasury, 1750 Pennsylvania Avenue, NW., Suite 11010, Washington, DC 20220.

Dates: Written comments should be received on or before November 18, 2010 to be assured of consideration.

Internal Revenue Service (IRS)

OMB Number: 1545–0112.

Type of Review: Extension without change to a currently approved collection.

Title: Form 1099–INT, Interest Income.

Form: 1099–INT.

Abstract: This form is used for reporting interest income paid, as required by sections 6049 and 6041 of the Internal Revenue Code. It is used to verify that payees are correctly reporting their income.

Respondents: Private Sector: Businesses or other for-profits.

Estimated Total Burden Hours: 63,677,672 hours.

OMB Number: 1545–0747.

Type of Review: Revision of a currently approved collection.

Title: IRA Contribution Information.

Form: 5498.

Abstract: Form-5498 is used by trustees and issuers to report contributions to, and the fair market value of, an individual retirement arrangement (IRA).

Respondents: Private Sector: Businesses or other for-profits.

Estimated Total Burden Hours: 47,109,000 hours.

Bureau Clearance Officer: R. Joseph Durbala, Internal Revenue Service, 1111 Constitution Avenue, NW., Room 6129, Washington, DC 20224; (202) 622–3634.

OMB Reviewer: Shagufta Ahmed, Office of Management and Budget, New Executive Office Building, Room 10235, Washington, DC 20503; (202) 395–7873.

Dawn D. Wolfgang,

Treasury PRA Clearance Officer.

[FR Doc. 2010–26325 Filed 10–18–10; 8:45 am]

BILLING CODE 4830–01–P

DEPARTMENT OF THE TREASURY

Internal Revenue Service

Privacy Act of 1974, as Amended

AGENCY: Internal Revenue Service, Treasury.

ACTION: Notice of proposed alterations to three Privacy Act systems of records.

SUMMARY: In accordance with the requirements of the Privacy Act of 1974, as amended, the Department of the Treasury, Internal Revenue Service (IRS), gives notice of proposed alternations to three Privacy Act systems of records related to the functions of the Office of Professional Responsibility (OPR): Treasury/IRS 37.006, Correspondence, Miscellaneous Records, and Information Management Records; Treasury/IRS 37.007, Practitioner Disciplinary Records; and Treasury/IRS 37.009, Enrolled Agents and Resigned Enrolled Agents.

DATES: Comments must be received no later than November 18, 2010. The proposed altered systems will become effective November 29, 2010, unless the IRS receives comments which cause reconsideration of this action.

ADDRESSES: Comments should be sent to the Office of Governmental Liaison and Disclosure, Internal Revenue Service, 1111 Constitution Avenue, NW., Washington, DC 20224. Comments will be available for inspection and copying in the IRS Freedom of Information Reading Room (Room 1621) at the above address. The telephone number for the Reading Room is (202) 622–5164 (not a toll-free number).

FOR FURTHER INFORMATION CONTACT: Earl Prater, Senior Counsel, OPR, at (202) 622–8018 (not a toll-free number).

SUPPLEMENTARY INFORMATION: The regulations governing practice before the IRS, issued under the authority of 31 U.S.C. 330, are set out at 31 CFR part 10, and are published in pamphlet form as Treasury Department Circular No. 230 (Circular 230). As authorized by 31 CFR part 10, the Director, OPR, acts on applications for enrollment to practice before the IRS; makes inquiries with respect to matters under OPR's jurisdiction; institutes and provides for the conduct of disciplinary proceedings relating to practitioners (attorneys,

certified public accountants, enrolled agents, enrolled actuaries, and enrolled retirement plan agents), appraisers, and employers, firms, or other entities on whose behalf these individuals act; and performs other duties as are necessary or appropriate to carry out OPR's functions under 31 CFR part 10 or as prescribed by the Secretary of the Treasury or his delegate.

The IRS currently maintains three Privacy Act systems of records related to the functions of OPR. Notices describing these systems of records were most recently published at 73 FR 13326–13330, March 12, 2008. As described below, the IRS proposes to alter the three systems.

(1) Treasury/IRS 37.006—Correspondence, Miscellaneous Records, and Information Management Records

The following alterations to this system of records are proposed:

(a) To add Martinsburg, West Virginia, and Memphis, Tennessee, to "System Location";

(b) To revise "Categories of Individuals Covered by the System" to include individual sponsors of continuing professional education for enrolled retirement plan agents and to refer to former Government employees who "submit" (rather than "must file") statements that their current firm has isolated them from representations that would create a post-employment conflict of interest;

(c) To revise routine use (1) by amending the phrase "and the IRS or the Department of Justice determines" to read "and the IRS determines";

(d) To revise routine use (6) by substituting "IRS" in place of "Department" to reflect that the records in this system are IRS records, not Department of the Treasury records; and

(e) To make necessary "housekeeping" alterations, such as making phrasing and punctuation consistent with other IRS system of record notices and revising legal citations.

(2) Treasury/IRS 37.007—Practitioner Disciplinary Records

The following alterations to this system of records are proposed:

(a) To add Martinsburg, West Virginia, and Memphis, Tennessee, to "System Location";

(b) To add enrolled retirement plan agents and individuals who submit disciplinary referrals to OPR to "Categories of Individuals Covered by the System";

(c) To revise routine use (1) by amending the phrase "and the IRS or the Department of Justice determines" to read "and the IRS determines";

(d) To restate routine use (7) authorizing disclosure to the public of documents in disciplinary proceedings to list only reports and decisions of the Secretary of the Treasury, or his delegate, including any reports and decisions of the administrative law judge;

(e) To restate routine use (8) authorizing disclosure to the public of information concerning individuals who have received a disciplinary sanction or who have been denied eligibility to engage in limited practice before the IRS to add enrolled retirement plan agents;

(f) To restate routine use (10) authorizing disclosure of information to a public, quasi-public, or private professional "organization or association" to clarify that such terms include entities designated as, or considered to be, an "authority" or "agency";

(g) To restate routine use (11) authorizing disclosure of information concerning the status of disciplinary investigations to individuals who have submitted reports of possible violations of 31 CFR part 10 to permit disclosure of OPR's determination that the reported conduct does not warrant a censure, suspension, or disbarment;

(h) To insert a new routine use (13) authorizing disclosure of information to a state tax agency for tax administration purposes, including the agency's efforts to ensure compliance with ethical rules and standards of conduct by individuals authorized to practice or individuals who seek permission to practice before the agency (disclosure of returns and return information may be made only as provided by 26 U.S.C. 6103);

(i) Renumbering the former routine use (13) as routine use (14) and amending the routine use by substituting "IRS" in place of "Department" to reflect that the records in this system are IRS records, not Department of the Treasury records; and

(j) To make necessary "housekeeping" alterations, such as making phrasing and punctuation consistent with other IRS system of record notices and revising legal citations.

(3) Treasury/IRS 37.009—Enrolled Agents and Resigned Enrolled Agents

The following alterations to this system of records are proposed:

(a) To change the title of the system to "Enrolled Agent and Enrolled Retirement Plan Agent Records";

(b) To add Martinsburg, West Virginia, and Memphis, Tennessee, to "System Location";

(c) To add enrolled retirement plan agents to "Categories of Individuals Covered by the System";

(d) To replace "the enrolled agent program" with "the enrollment program" in "Purpose(s)";

(e) To revise routine use (1) by amending the phrase "and the IRS or the Department of Justice determines" to read "and the IRS determines";

(f) To restate routine use (7) authorizing disclosure to the public of information concerning individuals who are, or were, enrolled to practice before the IRS to permit the disclosure of additional information to assist taxpayers in locating enrolled individuals and in verifying individuals' enrollment status;

(g) To restate routine use (8) authorizing disclosure of information to a public, quasi-public, or private professional "organization or association" to clarify that such terms include entities designated as, or considered to be, an "authority" or "agency";

(h) To insert a new routine use (9) authorizing disclosure of information to a state tax agency for tax administration purposes, including the agency's efforts to ensure compliance with ethical rules and standards of conduct by individuals authorized to practice or individuals who seek permission to practice before the agency (disclosure of returns and return information may be made only as provided by 26 U.S.C. 6103); and

(i) Renumbering the former routine use (9) as routine use (10) and amending the routine use by substituting "IRS" in place of "Department" to reflect that the records in this system are IRS records, not Department of the Treasury records; and

(j) To make necessary "housekeeping" alterations, such as making phrasing and punctuation consistent with other IRS system of record notices and revising legal citations.

A final rule is being published separately in the **Federal Register** to revise 31 CFR 1.36 (g)(1)(viii) to amend the name of Treasury/IRS 37.009 to read "Enrolled Agent and Enrolled Retirement Plan Agent Records".

The report of the altered systems of records, as required by 5 U.S.C. 552a(r) of the Privacy Act has been submitted to the Committee on Oversight and Government Reform of the House of Representatives, the Committee on Homeland Security and Governmental Affairs of the Senate, and the Office of Management and Budget (OMB), pursuant to Appendix I to OMB Circular A–130, "Federal Agency Responsibilities for Maintaining

Records About Individuals," dated November 30, 2000.

The three proposed altered systems of records, described above, are published in their entirety below.

Date: September 28, 2010.

Melissa Hartman,

Deputy Assistant Secretary for Privacy, Transparency, and Records.

TREASURY/IRS 37.006

SYSTEM NAME:

Correspondence, Miscellaneous Records, and Information Management Records—Treasury/IRS.

SYSTEM LOCATION:

Office of Professional Responsibility (OPR), Internal Revenue Service (IRS), Washington, DC; Detroit Computing Center, Detroit, Michigan; Martinsburg, West Virginia; and Memphis, Tennessee.

CATEGORIES OF INDIVIDUALS COVERED BY THE SYSTEM:

Individuals who correspond with OPR, individuals on whose behalf correspondence is initiated, and individuals who are the subject of correspondence; individuals who file, pursuant to 31 CFR part 10, program sponsor agreements for continuing professional education for enrolled agents or enrolled retirement plan agents; individuals who request, pursuant to 31 CFR part 10, authorization to make a special appearance before the IRS to represent another person in a particular matter; former Government employees who, pursuant to 31 CFR part 10, submit statements that their current firm has isolated them from representations that would create a post-employment conflict of interest; individuals who appeal from determinations that they are ineligible to engage in limited practice before the IRS under 31 CFR part 10; and individuals who serve as point of contact for organizations (including organizations that apply for recognition as a sponsor of continuing professional education for enrolled agents or enrolled retirement plan agents and tax clinics that request OPR to issue special orders authorizing tax clinic personnel to practice before the IRS).

CATEGORIES OF RECORDS IN THE SYSTEM:

Correspondence (including, but not limited to, letters, faxes, telegrams, and emails) sent and received; mailing lists of, and responses to, quality and improvement surveys of individuals; program sponsor agreements for continuing professional education; requests for authorization to make a special appearance before the IRS; statements of isolation from representations that would create a post-employment conflict of interest; appeals from determinations of ineligibility to engage in limited practice; records pertaining to consideration of these matters; and workload management records.

AUTHORITY FOR MAINTENANCE OF THE SYSTEM:

5 U.S.C. 301, 26 U.S.C. 7801 and 7803, and 31 U.S.C. 330.

PURPOSE(S):

To permit OPR to manage correspondence, to track responses from quality and improvement surveys, to manage workloads, and to collect and maintain other administrative records that are necessary for OPR to perform its functions under the regulations governing practice before the IRS, which are set out at 31 CFR part 10 and are published in pamphlet form as Treasury Department Circular No. 230, and its functions under other grants of authority.

ROUTINE USES OF RECORDS MAINTAINED IN THE SYSTEM, INCLUDING CATEGORIES OF USERS AND THE PURPOSES OF SUCH USES:

Disclosure of returns and return information may be made only as provided by 26 U.S.C. 6103. All other records may be used as described below if the IRS deems the purpose of the disclosure to be compatible with the purpose for which the IRS collected the records and no privilege is asserted:

(1) Disclose information to the Department of Justice when seeking legal advice or for use in any proceeding, or in preparation for any proceeding, when: (a) The IRS or any component thereof; (b) any IRS employee in his or her official capacity; (c) any IRS employee in his or her individual capacity if the IRS or the Department of Justice has agreed to provide representation for the employee; or (d) the United States is a party to, has an interest in, or is likely to be affected by, the proceeding; and the IRS determines that the information is relevant and necessary to the proceeding or advice sought.

(2) Disclose information during a proceeding before a court, administrative tribunal, or other adjudicative body when: (a) The IRS or any component thereof; (b) any IRS employee in his or her official capacity; (c) any IRS employee in his or her individual capacity if the IRS or the Department of Justice has agreed to provide representation for the employee; or (d) the United States is a party to, has an interest in, or is likely to be affected by, the proceeding; and the IRS or the Department of Justice determines that the information is relevant and necessary to the proceeding. Information may be disclosed to the adjudicative body to resolve issues of relevancy, necessity, or privilege pertaining to the information.

(3) Disclose information to a Federal, state, local, tribal, or foreign agency, or other public authority, which has requested information relevant or necessary to hiring or retaining an employee or to issuing, or continuing, a contract, security clearance, license, grant, or other benefit.

(4) Disclose information to a Federal, state, local, tribal, or foreign agency or other public authority responsible for implementing or enforcing, or for investigating or prosecuting, the violation of a statute, rule, regulation, order, or license when a record on its face, or in conjunction with other records, indicates a violation or potential violation of law or regulation and the information disclosed is relevant to any regulatory, enforcement, investigative, or prosecutorial responsibility of the receiving authority.

(5) Disclose information to a contractor to the extent necessary to perform the contract.

(6) Disclose information to appropriate agencies, entities, and persons when (a) the IRS suspects or has confirmed that the security or confidentiality of information in the system of records has been compromised; (b) the IRS has determined that as a result of the suspected or confirmed compromise there is a risk of harm to economic or property interests, identity theft or fraud, or harm to the security or integrity of this system or other systems or programs (whether maintained by the IRS or another agency or entity) that rely upon the compromised information; and (c) the disclosure made to such agencies, entities, and persons is reasonably necessary to assist in connection with the IRS' efforts to respond to the suspected or confirmed compromise and prevent, minimize, or remedy such harm.

POLICIES AND PRACTICES FOR STORING, RETRIEVING, ACCESSING, RETAINING, AND DISPOSING OF RECORDS IN THE SYSTEM:

STORAGE:

Paper records and electronic media.

RETRIEVABILITY:

By individual's name. Non-unique names will be distinguished by addresses.

SAFEGUARDS:

Access controls are not less than those published in IRM 10.8, Information Technology (IT) Security, and IRM 1.16, Physical Security Program.

RETENTION AND DISPOSAL:

Records are retained in accordance with IRM 1.15, Records Management.

SYSTEM MANAGER(S) AND ADDRESS:

Director, Office of Professional Responsibility, SE:OPR, 1111 Constitution Avenue, NW., Washington, DC 20224.

NOTIFICATION PROCEDURES:

Individuals seeking to determine if this system of records contains a record pertaining to themselves may inquire in accordance with instructions appearing at 31 CFR part 1, Subpart C, Appendix B. Inquiries should be addressed to the system manager listed above.

RECORD ACCESS PROCEDURES:

Individuals seeking access to any record contained in this system, or seeking to contest its content, may inquire in accordance with instructions appearing at 31 CFR part 1, Subpart C, Appendix B. Inquiries should be addressed to the system manager listed above.

CONTESTING RECORD PROCEDURES:

See "Record Access Procedures" above.

RECORD SOURCE CATEGORIES:

Individuals, other correspondents, and Treasury Department records.

EXEMPTIONS CLAIMED FOR THE SYSTEM:

None.

TREASURY/IRS 37.007

SYSTEM NAME:

Practitioner Disciplinary Records —Treasury/IRS.

SYSTEM LOCATION:

Office of Professional Responsibility (OPR), Internal Revenue Service (IRS), Washington, DC; Martinsburg, West Virginia; and Memphis, Tennessee.

CATEGORIES OF INDIVIDUALS COVERED BY THE SYSTEM:

Subjects and potential subjects of disciplinary proceedings relating to attorneys, certified public accountants, enrolled agents, enrolled actuaries, enrolled retirement plan agents, and appraisers; subjects or potential subjects of actions to deny eligibility to engage in limited practice before the IRS or actions to withdraw eligibility to practice before the IRS in any other capacity; individuals who have received disciplinary sanctions or whose eligibility to practice before the IRS has been denied or withdrawn; and individuals who have submitted to OPR information concerning potential violations of 31 CFR part 10.

CATEGORIES OF RECORDS IN THE SYSTEM:

Information sent to, or collected by, OPR concerning potential violations of 31 CFR part 10, including disciplinary decisions and orders (and related records) of Federal or state courts, agencies, bodies, and other licensing authorities; records pertaining to OPR's investigation and evaluation of such information; records of disciplinary proceedings brought by OPR before administrative law judges, including records of appeals from decisions in such proceedings; petitions for reinstatement to practice before the IRS (and related records); Federal court orders enjoining individuals from representing taxpayers before the IRS; and press releases concerning such injunctions.

AUTHORITY FOR MAINTENANCE OF THE SYSTEM:

5 U.S.C. 301, 26 U.S.C. 7801 and 7803, and 31 U.S.C. 330.

PURPOSE(S):

To enforce and administer the regulations governing practice before the IRS, which are set out at 31 CFR part 10 and are published in pamphlet form as Treasury Department Circular No. 230; to make available to the general public information about disciplinary proceedings and disciplinary sanctions; to assist public, quasi-public, or private professional authorities, agencies, organizations, and associations and other law enforcement and regulatory authorities in the performance of their duties in connection with the administration and maintenance of standards of integrity, conduct, and discipline; and to assist state tax agencies in their efforts to ensure compliance with ethical rules and standards of conduct by individuals authorized to practice or individuals who seek permission to practice before the agency.

ROUTINE USES OF RECORDS MAINTAINED IN THE SYSTEM, INCLUDING CATEGORIES OF USERS AND THE PURPOSES OF SUCH USES:

Disclosure of returns and return information may be made only as provided by 26 U.S.C. 6103. All other records may be used as described below if the IRS deems the purpose of the disclosure to be compatible with the purpose for which the IRS collected the records and no privilege is asserted:

(1) Disclose information to the Department of Justice when seeking legal advice or for use in any proceeding, or in preparation for any proceeding, when: (a) The IRS or any component thereof; (b) any IRS employee in his or her official capacity; (c) any IRS employee in his or her individual capacity if the IRS or the Department of Justice has agreed to provide representation for the employee; or (d) the United States is a party to, has an interest in, or is likely to be affected by, the proceeding; and the IRS determines that the information is relevant and necessary to the proceeding or advice sought.

(2) Disclose information during a proceeding before a court, administrative tribunal, or other adjudicative body when: (a) The IRS or any component thereof; (b) any IRS employee in his or her official capacity; (c) any IRS employee in his or her individual capacity if the IRS or the Department of Justice has agreed to provide representation for the employee; or (d) the United States is a party to, has an interest in, or is likely to be affected by, the proceeding; and the IRS or the Department of Justice determines that the information is relevant and necessary to the proceeding. Information may be disclosed to the adjudicative body to resolve issues of relevancy, necessity, or privilege pertaining to the information.

(3) Disclose information to a Federal, state, local, tribal, or foreign agency, or other public authority, which has requested information relevant or necessary to hiring or retaining an employee or to issuing, or continuing, a contract, security clearance, license, grant, or other benefit.

(4) Disclose information to a Federal, state, local, tribal, or foreign agency or other public authority responsible for implementing or enforcing, or for investigating or prosecuting, the violation of a statute, rule, regulation, order, or license when a record on its face, or in conjunction with other records, indicates a violation or potential violation of law or regulation and the information disclosed is relevant to any regulatory, enforcement, investigative, or prosecutorial responsibility of the receiving authority.

(5) Disclose information to a contractor to the extent necessary to perform the contract.

(6) Disclose information to third parties during the course of an investigation to the extent deemed necessary by the IRS to obtain information pertinent to the investigation.

(7) Subject to the protective measures in 31 CFR part 10, make available for public inspection or otherwise disclose

to the general public reports and decisions of the Secretary of the Treasury, or his delegate, in disciplinary proceedings, including any reports and decisions of the administrative law judge.

(8) Make available for public inspection or otherwise disclose to the general public, after the final agency decision has been issued or after OPR has taken final action: (a) The name, mailing address, professional designation (attorney, certified public accountant, enrolled agent, enrolled actuary, enrolled retirement plan agent, or appraiser), type of disciplinary sanction, effective dates, and information about the conduct that gave rise to the sanction pertaining to individuals who have been censured, individuals who have been suspended or disbarred from practice before the IRS, individuals who have resigned as an enrolled agent or an enrolled retirement plan agent in lieu of a disciplinary proceeding being instituted or continued, individuals upon whom a monetary penalty has been imposed, and individual appraisers who have been disqualified; and (b) the name, mailing address, representative capacity (family member; general partner; full-time employee or officer of a corporation, association, or organized group; full-time employee of a trust, receivership, guardianship, or estate; officer or regular employee of a government unit; an individual representing a taxpayer outside the United States; or unenrolled return preparer), the fact of the denial of eligibility for limited practice, effective dates, and information about the conduct that gave rise to the denial pertaining to individuals who have been denied eligibility to engage in limited practice before the IRS pursuant to 31 CFR part 10.

(9) Make available for public inspection or otherwise disclose to the general public: The name, mailing address, professional designation or representative capacity, the fact of being enjoined from representing taxpayers before the IRS, the scope of the injunction, effective dates, and information about the conduct that gave rise to the injunction pertaining to individuals who have been enjoined by any Federal court from representing taxpayers before the IRS.

(10) Disclose information to a public, quasi-public, or private professional authority, agency, organization, or association, which individuals covered by this system of records may be licensed by, subject to the jurisdiction of, a member of, or affiliated with, including but not limited to state bars and certified public accountancy boards, to assist such authorities, agencies, organizations, or associations in meeting their responsibilities in connection with the administration and maintenance of standards of integrity, conduct, and discipline.

(11) Disclose upon written request to a member of the public who has submitted to OPR written information concerning potential violations of the regulations governing practice before the IRS: (a) That OPR is currently investigating or evaluating the information; (b) that OPR has determined that no action will be taken, because jurisdiction is lacking, because a disciplinary proceeding would be time-barred, or because the information does not constitute actionable violations of the regulations; (c) that OPR has determined that the reported conduct does not warrant a censure, suspension, or disbarment; and (d) if applicable, the name of the authority, agency, organization, or association or Department of the Treasury or IRS office to which OPR has referred the information.

(12) Disclose to the Office of Personnel Management the identity and status of disciplinary cases in order for the Office of Personnel Management to process requests for assignment of administrative law judges employed by other Federal agencies to conduct disciplinary proceedings.

(13) Disclose information to a state tax agency for tax administration purposes, including the agency's efforts to ensure compliance with ethical rules and standards of conduct by individuals authorized to practice or individuals who seek permission to practice before the agency.

(14) Disclose information to appropriate agencies, entities, and persons when (a) the IRS suspects or has confirmed that the security or confidentiality of information in the system of records has been compromised; (b) the IRS has determined that as a result of the suspected or confirmed compromise there is a risk of harm to economic or property interests, identity theft or fraud, or harm to the security or integrity of this system or other systems or programs (whether maintained by the IRS or another agency or entity) that rely upon the compromised information; and (c) the disclosure made to such agencies, entities, and persons is reasonably necessary to assist in connection with the IRS' efforts to respond to the suspected or confirmed compromise and prevent, minimize, or remedy such harm.

POLICIES AND PRACTICES FOR STORING, RETRIEVING, ACCESSING, RETAINING, AND DISPOSING OF RECORDS IN THE SYSTEM:

STORAGE:

Paper records and electronic media.

RETRIEVABILITY:

By individual's name, social security number (SSN) (where available), or complaint number pertaining to a disciplinary proceeding. Non-unique names will be distinguished by addresses.

SAFEGUARDS:

Access controls are not less than those published in IRM 10.8, Information Technology (IT) Security, and IRM 1.16, Physical Security Program.

RETENTION AND DISPOSAL:

Records are retained in accordance IRM 1.15, Records Management.

SYSTEM MANAGER(S) AND ADDRESS:

Director, Office of Professional Responsibility, SE:OPR, 1111 Constitution Avenue, NW., Washington, DC 20224.

NOTIFICATION PROCEDURES:

This system of records may not be accessed for purposes of determining whether the system contains a record pertaining to a particular individual; the records are exempt under 5 U.S.C. 552a(k)(2).

RECORD ACCESS PROCEDURES:

This system may not be accessed for purposes of inspection or in order to contest the content of records; the records are exempt under 5 U.S.C. 552a(k)(2).

CONTESTING RECORD PROCEDURES:

26 U.S.C. 7852(e) prohibits Privacy Act amendment of tax records. Other records are exempt from contest as stated in "Records Access Procedures" above.

RECORD SOURCE CATEGORIES:

Individuals covered by this system of records; witnesses; Federal or state courts, agencies, or bodies; professional authorities, agencies, organizations, or associations; state tax agencies; Treasury Department records; and public records.

EXEMPTIONS CLAIMED FOR THE SYSTEM:

Pursuant to section (k)(2) of the Privacy Act, 5 U.S.C. 552a(k)(2), the records contained within this system are exempt from the following sections of the Act: (c)(3), (d), (e)(1), (e)(4)(G), (e)(4)(H), (e)(4)(I), and (f). (See 31 CFR 1.36.)

TREASURY/IRS 37.009

SYSTEM NAME:

Enrolled Agent and Enrolled Retirement Plan Agent Records —Treasury/IRS.

SYSTEM LOCATION:

Office of Professional Responsibility (OPR), Internal Revenue Service (IRS), Washington, DC; Detroit Computing Center, Detroit, Michigan; Martinsburg, West Virginia, and Memphis, Tennessee.

CATEGORIES OF INDIVIDUALS COVERED BY THE SYSTEM:

Individuals currently or formerly enrolled to practice before the IRS; applicants for enrollment to practice before the IRS, including those who have appealed denial of applications for enrollment; and candidates for enrollment examinations.

CATEGORIES OF RECORDS IN THE SYSTEM:

Applications for enrollment to practice before the IRS; records pertaining to OPR's investigation and evaluation of eligibility for enrollment; appeals from denials of applications for enrollment (and related records); records relating to enrollment examinations, including candidate applications, answer sheets, and examination scores; applications for renewal of enrollment, including information on continuing professional education; and administrative records pertaining to enrollment status, including current status, dates of enrollment, dates of renewal, and dates of resignation or termination.

AUTHORITY FOR MAINTENANCE OF THE SYSTEM:

5 U.S.C. 301, 26 U.S.C. 7801 and 7803, and 31 U.S.C. 330.

PURPOSE(S):

To administer the enrollment program under the regulations governing practice before the IRS, which are set out at 31 CFR part 10 and are published in pamphlet form as Treasury Department Circular No. 230; to make available to the general public sufficient information to assist taxpayers in locating enrolled individuals and in accurately verifying individuals' enrollment status; to assist public, quasi-public, or private professional authorities, agencies, organizations, and associations and other law enforcement and regulatory authorities in the performance of their duties in connection with the administration and maintenance of standards of integrity, conduct, and discipline; and to assist state tax agencies in their efforts to ensure compliance with ethical rules and standards of conduct by individuals authorized to practice or individuals who seek permission to practice before the agency.

ROUTINE USES OF RECORDS MAINTAINED IN THE SYSTEM, INCLUDING CATEGORIES OF USERS AND THE PURPOSES OF SUCH USES:

Disclosure of returns and return information may be made only as provided by 26 U.S.C. 6103. All other records may be used as described below if the IRS deems the purpose of the disclosure to be compatible with the purpose for which the IRS collected the records and no privilege is asserted:

(1) Disclose information to the Department of Justice when seeking legal advice or for use in any proceeding, or in preparation for any proceeding, when: (a) The IRS or any component thereof; (b) any IRS employee in his or her official capacity; (c) any IRS employee in his or her individual capacity if the IRS or the Department of Justice has agreed to provide representation for the employee; or (d) the United States is a party to, has an interest in, or is likely to be affected by, the proceeding; and the IRS determines that the information is relevant and necessary to the proceeding or advice sought.

(2) Disclose information during a proceeding before a court, administrative tribunal, or other adjudicative body when: (a) The IRS or any component thereof; (b) any IRS employee in his or her official capacity; (c) any IRS employee in his or her individual capacity if the IRS or the Department of Justice has agreed to provide representation for the employee; or (d) the United States is a party to, has an interest in, or is likely to be affected by, the proceeding; and the IRS or the Department of Justice determines that the information is relevant and necessary to the proceeding. Information may be disclosed to the adjudicative body to resolve issues of relevancy, necessity, or privilege pertaining to the information.

(3) Disclose information to a Federal, state, local, tribal, or foreign agency, or other public authority, which has requested information relevant or necessary to hiring or retaining an employee or to issuing, or continuing, a contract, security clearance, license, grant, or other benefit.

(4) Disclose information to a Federal, state, local, tribal, or foreign agency or other public authority responsible for implementing or enforcing, or for investigating or prosecuting, the violation of a statute, rule, regulation, order, or license when a record on its face, or in conjunction with other records, indicates a violation or potential violation of law or regulation and the information disclosed is relevant to any regulatory, enforcement, investigative, or prosecutorial responsibility of the receiving authority.

(5) Disclose information to a contractor to the extent necessary to perform the contract.

(6) Disclose information to third parties during the course of an investigation to the extent deemed necessary by the IRS to obtain information pertinent to the investigation.

(7) Make available for public inspection or otherwise disclose to the general public the name, enrollment number, and enrollment status (active, inactive, inactive retired, terminated for failure to meet the requirements for renewal of enrollment, or resigned for reasons other than in lieu of a disciplinary proceeding being instituted or continued, including effective dates), as well as the mailing address, company or firm name, telephone number, fax number, e-mail address, and Web site address, pertaining to individuals who are, or were, enrolled to practice before the IRS.

(8) Disclose information to a public, quasi-public, or private professional authority, agency, organization, or association, which individuals covered by this system of records may be licensed by, subject to the jurisdiction of, a member of, or affiliated with, including but not limited to state bars and certified public accountancy boards, to assist such authorities, agencies, organizations, or associations in meeting their responsibilities in connection with the administration and maintenance of standards of integrity, conduct, and discipline.

(9) Disclose information to a state tax agency for tax administration purposes, including the agency's efforts to ensure compliance with ethical rules and standards of conduct by individuals authorized to practice or individuals who seek permission to practice before the agency.

(10) Disclose information to appropriate agencies, entities, and persons when (a) The IRS suspects or has confirmed that the security or confidentiality of information in the system of records has been compromised; (b) the IRS has determined that as a result of the suspected or confirmed compromise there is a risk of harm to economic or property interests, identity theft or fraud, or harm to the security or integrity of this system or other systems or programs (whether maintained by the IRS or another agency or entity) that rely

upon the compromised information; and (c) the disclosure made to such agencies, entities, and persons is reasonably necessary to assist in connection with the IRS' efforts to respond to the suspected or confirmed compromise and prevent, minimize, or remedy such harm.

POLICIES AND PRACTICES FOR STORING, RETRIEVING, ACCESSING, RETAINING, AND DISPOSING OF RECORDS IN THE SYSTEM:

STORAGE:

Paper records and electronic media.

RETRIEVABILITY:

By individual's name (including other names used), social security number (SSN) (where available), enrollment examination candidate number, enrollment application control number, enrollment number, or street address. Non-unique names will be distinguished by addresses.

SAFEGUARDS:

Access controls are not less than those published in IRM 10.8, Information Technology (IT) Security, and IRM 1.16, Physical Security Program.

RETENTION AND DISPOSAL:

Records are retained in accordance with IRM 1.15, Records Management.

SYSTEM MANAGER(S) AND ADDRESS:

Director, Office of Professional Responsibility, SE:OPR, 1111 Constitution Avenue, NW., Washington, DC 20224.

NOTIFICATION PROCEDURES:

This system may not be accessed for purposes of determining whether the system contains a record pertaining to a particular individual; the records are exempt under 5 U.S.C. 552a(k)(2).

RECORD ACCESS PROCEDURES:

This system may not be accessed for purposes of inspection or in order to contest the content of records; the records are exempt under 5 U.S.C. 552a(k)(2).

CONTESTING RECORD PROCEDURES:

26 U.S.C. 7852(e) prohibits Privacy Act amendment of tax records. Other records are exempt from contest as stated in "Record Access Procedures" above.

RECORD SOURCE CATEGORIES:

Individuals covered by this system of records; witnesses; Federal or state courts, agencies, or bodies; professional authorities, agencies, organizations, or associations; state tax agencies; Treasury Department records; and public records.

EXEMPTIONS CLAIMED FOR THE SYSTEM:

Pursuant to section (k)(2) of the Privacy Act, 5 U.S.C. 552a(k)(2), the records contained within this system are exempt from the following sections of the Act: (c)(3), (d), (e)(1), (e)(4)(G), (e)(4)(H), (e)(4)(I), and (f). (See 31 CFR 1.36.)

[FR Doc. 2010–26323 Filed 10–18–10; 8:45 am]

BILLING CODE 4830–01–P

Federal Register

Tuesday,
October 19, 2010

Part II

Department of Labor

Mine Safety and Health Administration

30 CFR Parts 70, 71, 72, et al.
Lowering Miners' Exposure to Respirable Coal Mine Dust, Including Continuous Personal Dust Monitors; Proposed Rule

DEPARTMENT OF LABOR

Mine Safety and Health Administration

30 CFR Parts 70, 71, 72, 75, and 90

RIN 1219–AB64

Lowering Miners' Exposure to Respirable Coal Mine Dust, Including Continuous Personal Dust Monitors

AGENCY: Mine Safety and Health Administration, Labor.

ACTION: Proposed rule.

SUMMARY: The Mine Safety and Health Administration (MSHA) proposes to lower miners' exposure to respirable coal mine dust by revising the Agency's existing standards on miners' occupational exposure to respirable coal mine dust. The major provisions of the proposal would lower the existing exposure limit; provide for full-shift sampling; redefine the term "normal production shift;" and add reexamination and decertification requirements for persons certified to sample, and maintain and calibrate sampling devices. In addition, the proposed rule would provide for single shift compliance sampling under the mine operator and MSHA's inspector sampling programs, and would establish sampling requirements for use of the Continuous Personal Dust Monitor (CPDM) and expanded requirements for medical surveillance.

The proposed rule would significantly improve health protections for this Nation's coal miners by reducing their occupational exposure to respirable coal mine dust and lowering the risk that they will suffer material impairment of health or functional capacity over their working lives.

DATES: All comments must be received by midnight Eastern Standard Time on February 28, 2011.

ADDRESSES: Comments must be clearly identified with "RIN 1219–AB64" and may be sent by any of the following methods:

(1) *Federal e-Rulemaking Portal: http://www.regulations.gov.* Follow the instructions for submitting comments.

(2) *Electronic mail: zzMSHA-comments@dol.gov.* Include "RIN 1219–AB64" in the subject line of the message.

(3) *Facsimile:* 202–693–9441. Include "RIN 1219–AB64" in the subject line of the message.

(4) *Regular Mail:* MSHA, Office of Standards, Regulations, and Variances, 1100 Wilson Boulevard, Room 2350, Arlington, Virginia 22209–3939.

(5) *Hand Delivery or Courier:* MSHA, Office of Standards, Regulations, and Variances, 1100 Wilson Boulevard, Room 2350, Arlington, Virginia. Sign in at the receptionist's desk on the 21st floor.

Information Collection Requirements: Comments concerning the information collection requirements of this proposed rule must be clearly identified with "RIN 1219–AB64" and sent to both the Office of Management and Budget (OMB) and MSHA. Comments to OMB may be sent by mail addressed to the Office of Information and Regulatory Affairs, Office of Management and Budget, New Executive Office Building, 725 17th Street, NW., Washington, DC 20503, Attn: Desk Officer for MSHA. Comments to MSHA may be transmitted either electronically to *zzMSHA-Comments@dol.gov,* by facsimile to (202) 693–9441, or by regular mail, hand delivery, or courier to MSHA, Office of Standards, Regulations, and Variances, 1100 Wilson Blvd., Room 2350, Arlington, Virginia 22209–3939.

FOR FURTHER INFORMATION CONTACT: Patricia W. Silvey, Director, Office of Standards, Regulations, and Variances, MSHA, 1100 Wilson Boulevard, Room 2350, Arlington, Virginia 22209–3939. Ms. Silvey can be reached at *Silvey.Patricia@dol.gov* (Internet E-mail), (202) 693–9440 (voice), or (202) 693–9441 (facsimile).

SUPPLEMENTARY INFORMATION:

Availability of Information

MSHA will post all comments on the Internet without change, including any personal information provided. Comments can be accessed electronically at *http://www.msha.gov/regsinfo.htm.* Comments may also be reviewed at the Office of Standards, Regulations, and Variances, 1100 Wilson Boulevard, Room 2350, Arlington, Virginia. Sign in at the receptionist's desk on the 21st floor.

MSHA maintains a list that enables subscribers to receive e-mail notification when rulemaking documents are published in the **Federal Register**. To subscribe, go to *http://www.msha.gov/subscriptions/subscribe.aspx.*

Table of Contents

I. Introduction
II. Background Information
  A. Interim Mandatory Standards Under the Mine Act
  B. MSHA's Existing Respirable Dust Standards
  C. 1995 NIOSH Criteria Document and 1996 Dust Advisory Committee Report
  D. 2000 and 2003 Plan Verification Proposed Rules
  E. 2000 Single Sample Proposed Rule
  F. Continuous Personal Dust Monitor
III. Section-by-Section Discussion
IV. Health Effects
V. Quantitative Risk Assessment
VI. Derivation and Distribution Table
VII. Executive Order 12866
  A. Population at Risk
  B. Benefits
  C. Compliance Costs
  D. Net Benefits
VIII. Feasibility
  A. Technological Feasibility
  B. Economic Feasibility
IX. Regulatory Flexibility Act and Small Business Regulatory Enforcement Fairness Act
  A. Definition of a Small Mine
  B. Factual Basis for Certification
X. Paperwork Reduction Act of 1995
  A. Summary
  B. Procedural Details
XI. Other Regulatory Considerations
  A. National Environmental Policy Act (NEPA)
  B. The Unfunded Mandates Reform Act of 1995
  C. The Treasury and General Government Appropriations Act of 1999: Assessment of Federal Regulations and Policies on Families
  D. Executive Order 12630: Government Actions and Interference With Constitutionally Protected Property Rights
  E. Executive Order 12988: Civil Justice Reform
  F. Executive Order 13045: Protection of Children From Environmental Health Risks and Safety Risks
  G. Executive Order 13132: Federalism
  H. Executive Order 13175: Consultation and Coordination with Indian Tribal Governments
  I. Executive Order 13211: Actions Concerning Regulations That Significantly Affect Energy Supply, Distribution, or Use
  J. Executive Order 13272: Proper Consideration of Small Entities in Agency Rulemaking
XII. References
XIII. Appendix A—Excessive Concentration Values

I. Introduction

This proposed rule promotes the Secretary of Labor's vision of "Good Jobs For Everyone." It also supports the Department of Labor's (DOL's) goal of securing safe and healthy workplaces, particularly for vulnerable workers in high-risk industries, such as mining, by reducing workplace deaths and improving the health of coal miners.

This proposed rule is an important element in MSHA's Comprehensive Initiative to "End Black Lung—Act Now!" MSHA launched this important initiative in December 2009 and it includes four components: rulemaking, enhanced enforcement, collaborative outreach, and education and training. The initiative will reduce, and ultimately eliminate, disabling occupational lung disease in coal mines.

This proposal provides the public with the opportunity to comment on the

Agency's comprehensive and integrated regulatory approach to reduce and eliminate continued risks to miners from exposure to respirable coal mine dust. Throughout the preamble, the terms "respirable coal mine dust," "coal mine dust," and "respirable dust" are used interchangeably. This proposal combines the following rulemaking actions: (1) "Occupational Exposure to Coal Mine Dust (Lowering Exposure);" (2) "Verification of Underground Coal Mine Operators' Dust Control Plans and Compliance Sampling for Respirable Dust" (Plan Verification) (65 FR 42122, July 7, 2000, and 68 FR 10784, March 6, 2003); (3) "Determination of Concentration of Respirable Coal Mine Dust" (Single Sample) (65 FR 42068, July 7, 2000, and 68 FR 10940 March 6, 2003); and (4) "Respirable Coal Mine Dust: Continuous Personal Dust Monitor (CPDM)" (74 FR 52708, October 14, 2009). MSHA is withdrawing Plan Verification and Single Sample as separate rulemaking actions.

Exposure to respirable coal mine dust can cause lung diseases including coal workers' pneumoconiosis (CWP), emphysema, silicosis, and chronic bronchitis, known collectively as "black lung." These diseases are debilitating, incurable, and can result in disability, and premature death. While considerable progress has been made in reducing the respirable coal mine dust levels, miners continue to develop black lung. Based on recent data from the National Institute for Occupational Safety and Health (NIOSH), the prevalence rate of black lung is increasing in our nation's coal miners; even younger miners are showing evidence of advanced and seriously debilitating lung disease. Black lung is a preventable disease.

Several provisions in the proposed rule, including lowering the respirable dust standard, basing noncompliance determinations on single shift sampling, sampling of extended work shifts to account for occupational exposures greater than 8 hours per shift, and changing the definition of normal production shift, would singularly lower coal miners' exposure to respirable dust. For example, MSHA's quantitative risk assessment (QRA) estimates the reduction in health risks when two provisions of the proposed rule are implemented—the proposed respirable dust limit and single shift sampling. The QRA shows that these two proposed provisions would significantly reduce the risks of CWP, severe emphysema, and death from non-malignant respiratory disease (NMRD). For instance, at underground mines, the QRA projects over a 45-year occupational lifetime from 1–105 fewer cases of pneumoconiosis per thousand exposed truck drivers, and 50 fewer cases of severe emphysema and 15 fewer deaths due to NMRD per thousand exposed cutting machine operators (see the QRA discussion in Section V of this preamble).

The other provisions in the proposed rule would further reduce health risks to miners. Cumulatively, the proposed provisions would reduce the continued risks that coal miners face from exposure to respirable coal mine dust and would further protect them from the debilitating effects of occupational respiratory disease.

II. Background Information

A. Interim Mandatory Standards Under the Mine Act

Section 202 of the Federal Mine Safety and Health Act of 1977 (Mine Act) established interim mandatory standards for respirable dust that remain in effect until superseded by improved permanent mandatory standards promulgated by the Secretary under Section 101. Section 202(b)(2) required each underground coal mine operator to *continuously* maintain the *average concentration* of respirable dust in the mine atmosphere during each shift to which each miner in the active workings is exposed at or below 2.0 milligrams of respirable dust per cubic meter of air (*i.e.,* 2.0 mg/m^3) (emphasis added). Section 205 required that when coal mine dust contains more than five percent quartz (*i.e.,* silica), the respirable coal mine dust standard must be reduced according to a formula prescribed by NIOSH.

B. MSHA's Existing Respirable Dust Standards

MSHA's existing respirable dust standards, promulgated on April 8, 1980, implemented Section 202(b) of the Mine Act (45 FR 23990, April 8, 1980). The standards require coal mine operators to continuously maintain the average concentration of respirable dust to which each miner is exposed during each shift at or below 2.0 milligrams per cubic meter of air (2.0 mg/m^3) (30 CFR 70.100 (underground coal mines), 71.100 (surface coal mines and surface areas of underground coal mines)). Miners who have evidence of pneumoconiosis and are employed at underground coal mines or surface work areas of underground coal mines have the option to work in areas where average respirable dust concentrations do not exceed 1.0 mg/m^3 of air (30 CFR § 90.100, "part 90 miners"). There is no separate standard for respirable silica; rather, where the total respirable coal mine dust contains more than five percent quartz, the respirable coal mine dust standard is computed by dividing the percentage of quartz into the number ten (30 CFR §§ 70.101 (underground coal mines), 71.101 (surface coal mines and surface areas of underground coal mines), and 90.101 (part 90 miners)).

The term "average concentration" in MSHA's existing standards tracks the language of the Mine Act and is defined in § 202(f) of the Mine Act as follows:

> [T]he term "average concentration" means a determination which accurately represents the atmospheric conditions with regard to respirable dust to which each miner in the active workings of a mine is exposed (1) as measured, during the 18 month period following December 30, 1969, over a number of continuous production shifts to be determined by the Secretary [of Labor; Originally, the Secretary of the Interior] and the Secretary of Health and Human Services [originally, the Secretary of Health, Education, and Welfare (HEW)], and (2) as measured thereafter, over a single shift only, unless the Secretary [of Labor] and the Secretary of Health and Human Services find, in accordance with the provisions of section 811 of this title, that such single shift measurement will not, after applying valid statistical techniques to such measurement, accurately represent such atmospheric conditions during such shift (30 U.S.C. § 842(f)).

Section 202(f) of the Mine Act is taken essentially verbatim from § 202(f) of the Federal Coal Mine Health and Safety Act of 1969 (Coal Act). In 1972, acting pursuant to the Coal Act, the Secretaries of the Interior and HEW made the joint finding referred to in § 202(f), concluding that "single shift measurement of respirable dust will not, after applying valid statistical techniques to such measurement, accurately represent the atmospheric conditions to which the miner is continuously exposed" (Notice of Finding That a Single Shift Measurement of Respirable Dust Will Not Accurately Represent Atmospheric Conditions During Such Shift, 37 FR 3833 (February 23, 1972) (1972 Joint Finding)). Under § 301(b)(1) and (c)(2) of the Mine Act, all standards, decisions, determinations, and regulations issued under the Coal Act remain in effect under the Mine Act until modified or set aside.

Under MSHA's existing standards, mine operators are required to collect bimonthly respirable dust samples and submit them to MSHA for analysis to determine compliance with applicable respirable dust standards (compliance samples). If compliance samples do not meet the requirements of the applicable dust standard, MSHA issues a citation

for a violation of the standard and the operator is required to take corrective action to lower the respirable dust concentration to meet the standard. Further, the operator must collect additional respirable dust samples during the time established in the citation for abatement of the hazard or violation (abatement sampling).

Underground coal mine operators collect and submit two types of samples during bimonthly sampling periods: (1) "designated occupation" (DO) samples taken for the occupations exposed to the greatest concentrations of respirable dust in each mechanized mining unit (DOs are specified in § 70.207); and (2) "designated area" (DA) samples collected at locations appropriate to best measure concentrations of respirable dust associated with dust generation sources in the active working of the mine (§ 70.208). The operator's approved ventilation system and methane and dust control plan, required in existing 30 CFR part 75, must show the specific locations in the mine designated for taking the DA samples. In addition, mine operators take respirable dust samples for part 90 miners (§§ 90.207 and 90.208).

Similarly, for surface work areas of underground mines and for surface mines, mine operators are required to collect bimonthly samples from "designated work positions" (DWPs), which are designated by the District Manager (§ 71.208).

Compliance determinations are based on the average concentration of respirable dust measured by five valid respirable dust samples taken by the operator during five consecutive normal production shifts or five normal production shifts worked on consecutive days (multiple-shift samples). Compliance determinations are also based on the average of multiple measurements taken by the MSHA inspector over a single shift (multiple, single-shift samples) or on the average of multiple measurements obtained for the same occupation on successive days (multiple-shift samples).

In 1991, MSHA began a spot inspection program (SIP). Under the SIP, if the average of multiple occupation measurements taken by the MSHA inspector on an MMU during any one-day inspection (multiple, single-shift samples) did not exceed the applicable respirable dust standard, the MSHA inspector would review the result of each individual full-shift sample (single, full-shift sample). If any single, full-shift sample exceeded the applicable standard by an amount specified by MSHA, a citation would be issued for noncompliance, requiring the mine operator to take immediate corrective action to lower the average dust concentration in the mine atmosphere in order to protect miners. In November 1991, MSHA extended the single, full-shift sampling method to all mining types, not just MMUs.

In *Keystone Coal,* 16 FMSHRC 6 (Jan. 4, 1994), the Federal Mine Safety and Health Review Commission (Commission) vacated three citations that were based on single, full-shift samples taken by MSHA inspectors under the SIP. MSHA contended that the 1972 Joint Finding did not preclude the SIP because the Joint Finding pertained to operator sampling, while the SIP involved MSHA sampling only. The Commission rejected that argument and concluded that MSHA policy could only be altered if the requirements of the Mine Act and the Administrative Procedure Act (5 U.S.C. 551 *et seq.*) were met. (*i.e.,* notice and comment rulemaking procedures). As a result of the decision, MSHA terminated the SIP.

In *Secretary of Labor* v. *Excel Mining LLC,* 334 F.3d 1 (D.C. Cir. 2003), the Secretary interpreted § 202(f) of the Mine Act and the 1972 Joint Finding to bar MSHA's use of a single, full-shift sample to calculate average dust concentration for enforcement purposes because, after applying valid statistical techniques, those samples would not accurately represent the atmospheric conditions to which the miner is continuously exposed. However, the Secretary further took the position that the statute and Joint Finding did not bar the Agency from making compliance determinations based on an average of multiple samples taken over a single shift ("multiple, single-shift samples"). The Court found the Secretary's interpretation was reasonable.

C. 1995 NIOSH Criteria Document and 1996 Dust Advisory Committee Report

On November 7, 1995, NIOSH submitted to the Secretary a criteria document recommending reduced standards for respirable coal mine dust and silica exposure. On April 25, 1996, MSHA published a **Federal Register** notice stating that it had decided to respond to the NIOSH criteria document by developing a proposed rule "derived from the recommendations" in the NIOSH Criteria Document (61 FR 18308, April 25, 1996). The NIOSH Criteria Document can be accessed electronically at *http://www.cdc.gov/niosh/95-106.html.* MSHA further stated that, although it would begin "the background work necessary to develop such a rule," it would defer development of the rule until it received a report from the Secretary of Labor's Advisory Committee on the Elimination of Pneumoconiosis Among Coal Mine Workers (Dust Advisory Committee), which the Secretary had established on January 31, 1995, and to which MSHA had referred the NIOSH criteria document.

On November 14, 1996, the Dust Advisory Committee submitted its report to the Secretary. The Dust Advisory Committee Report can be accessed electronically at *http://www.msha.gov/S&HINFO/BlackLung/1996Dust%20AdvisoryReport.pdf.* The report contained 20 wide-ranging principal recommendations, subdivided into approximately 100 action items, aimed at eliminating coal miners' pneumoconiosis and silicosis (62 FR 3717, January 24, 1997). The report recommended that MSHA consider lowering the level of allowable exposure to coal mine dust, with any reduction accompanied by a phase-in period to allow allocation of sufficient resources to the compliance effort.

D. 2000 and 2003 Plan Verification Proposed Rules

On July 7, 2000, MSHA published the Plan Verification proposed rule. The proposal would require underground mine operators to have a verified mine ventilation plan, with MSHA collecting samples to verify the adequacy of dust control parameters specified in the ventilation plan to maintain respirable dust standards ("verification sampling").

In response to comments urging MSHA to withdraw the proposal, MSHA published a new proposed rule on March 6, 2003, (68 FR 10784), which would require mine operators to have a "verified" mine ventilation plan and conduct verification sampling on each mechanized mining unit (MMU). Under the proposal, mine operators would demonstrate the adequacy of dust control parameters specified in the ventilation plan to maintain the concentration of respirable coal mine dust and quartz dust at or below applicable dust standards. In addition, the mine operators' existing bimonthly respirable dust sampling program for each MMU and DA would be eliminated and MSHA would assume responsibility for compliance and abatement sampling in underground coal mines.

The 2003 proposal would also provide for the use of CPDMs once the CPDM was verified as reliable under mining conditions and commercially available.

Public hearings were held in May 2003. The closing date for the comment period for the Plan Verification proposed rule was extended indefinitely to obtain information concerning

CPDMs being tested by NIOSH (68 FR 39881, July 3, 2003).

The following provisions from the 2003 Plan Verification proposal have been revised and integrated into this proposed rule: (1) Use of the CPDM in monitoring respirable dust exposures; (2) recording the amount of material produced by each MMU during each production shift and retaining the record; (3) sampling for respirable dust during the entire time that a miner works to account for shifts longer than 8 hours (hr); (4) requiring that dust control parameters in the mine's ventilation plan be revised when respirable dust overexposures are indicated; and (5) including threshold values that would be used to determine violations based on single sample measurements. With issuance of this proposed rule, MSHA is no longer accepting comments on the 2003 Plan Verification proposed rule. Comments on provisions of the 2003 Plan Verification proposal that are integrated in this proposal are addressed in the section-by-section analysis of this preamble.

E. 2000 Single Sample Proposed Rule

On July 7, 2000, MSHA and NIOSH jointly published a proposed rule on Determination of Concentration of Respirable Coal Mine Dust (Single Sample) (65 FR 42068). The proposal would have rescinded the 1972 Joint Notice and established that a single, full-shift measurement of respirable coal mine dust may be used to determine the average concentration on a shift if that measurement accurately represents atmospheric conditions to which a miner is exposed during such shift.

MSHA proposed the 2000 Single Sample rule following *National Mining Association (NMA) et al.* v. *Secretary of Labor, et al.,* 153 F.3d 1264 (11th Cir. 1998). In this case, the Court of Appeals for the 11th Circuit (Court) reviewed the 1998 Final Joint Notice of Finding issued by MSHA and NIOSH. The 1998 Final Joint Finding, issued on February 3, 1998, concluded that the 1972 Joint Finding was incorrect and stated that the average respirable dust concentration to which a miner is exposed can be accurately measured over a single shift (63 FR 5664). The Court vacated the 1998 Joint Finding and found that MSHA was required by section 101(a)(6)(A) of the Mine Act to demonstrate that the single full-shift measurement adequately assures that no miner will suffer a material impairment of health, on the basis of the best available evidence; uses the latest available scientific data in the field; is technologically and economically feasible; and is based on experience gained under the Mine Act and other health and safety laws (153 F.3d 1268–1269).

On March 6, 2003, MSHA and NIOSH reopened the rulemaking record to allow further comment on the 1998 Final Finding and to solicit comment on new data and information added to the record (68 FR 10940). In May 2003, public hearings on the 2000 single sample proposal were held jointly with the 2003 plan verification proposal. The comment period for the single sample proposal was extended indefinitely in order to obtain information on CPDMs being tested by NIOSH (68 FR 47886, August 12, 2003). The single sample proposal is a part of this proposed rule.

F. Continuous Personal Dust Monitors (CPDM)

On April 6, 2010, 75 FR 17512, MSHA and NIOSH published a final rule revising approval requirements under 30 CFR part 74 for the existing coal mine dust personal samplers. It also establishes new approval requirements for the new CPDM.

The CPDM is new technology that provides a direct measurement of respirable dust in the miner's work atmosphere on a real-time basis. In September 2006, NIOSH published the results of a collaborative study designed to verify the performance of the pre-commercial CPDM in laboratory and underground coal mine environments. According to the NIOSH Report of Investigations 9669, "Laboratory and Field Performance of a Continuously Measuring Personal Respirable Dust Monitor," (Volkwein, JC et al., 2006), the CPDM is accurate, precise, and durable under harsh mining conditions in providing continuous exposure information previously not available to coal miners and coal mine operators.

On October 14, 2009, MSHA published a Request for Information (RFI) on potential applications of CPDM technology to monitor and control miners' exposure to respirable coal mine dust during a working shift (74 FR 52708). The comment period closed on December 14, 2009.

III. Section-by-Section Discussion

Discussion of Alternatives

The proposed rule presents a comprehensive integrated approach for lowering miners' exposure to respirable coal mine dust. The proposal combines the following regulatory actions: Lowering miners' coal mine dust exposure; single shift sampling to determine noncompliance; plan verification (normal production shift and full shift sampling); and the use of the CPDM. In developing the proposed rule, MSHA considered a number of alternatives, ranging from addressing each rulemaking separately to combining a number of them. For example, MSHA considered lowering the exposure limit separately; and lowering the exposure limit in conjunction with single shift sampling. MSHA also considered implementation of CPDMs as a separate, later rulemaking. However, the Secretary of Labor considers ending black lung disease as one of the Department's highest regulatory priorities and strongly believes that the proposed integrated regulatory approach represents the most effective strategy for reducing miners' exposure to respirable dust. The proposed integrated approach would allow miners and operators to review and respond to the most effective provisions for addressing black lung at one time. The proposal allows both the mining community and MSHA to address improvements to end black lung comprehensively. Improvements include: regulations, enforcement procedures, compliance tools, and information technology systems and support related to coal mine dust sampling.

MSHA also considered various alternatives to key provisions in the proposal. For example, MSHA considered:

- Other limits for the respirable dust standard;
- The occupations, miners, and areas that operators should sample and sampling frequency. MSHA considered options that would sample more miners more frequently, but rejected these due to estimated projected benefits;
- Shorter and longer implementation dates for the proposed exposure limits and proposed use of CPDMs;
- Alternatives to calculating sampling of extended work shifts;
- Different production levels associated with the proposed definition of "normal production shift"; and
- Whether taking single shift samples to determine noncompliance with the proposed exposure limit should apply only to MSHA inspector samples, or to both operator and MSHA samples.

The Agency believes that the integrated approach in the proposed rule would achieve an effective and balanced regulatory program consistent with MSHA's Comprehensive Black Lung Initiative to lower coal miners' exposure to respirable coal mine dust and end lung disease. The Agency believes that a more compartmentalized approach would lessen the impact of the benefits to be achieved by this

important initiative and would not adequately reduce the risk of serious lung disease from coal mine dust exposure. The Agency solicits comment on which provisions in the proposal would be more effective if implemented. Commenters are requested to submit other alternatives, including detailed rationale and supporting documentation.

30 CFR Part 70

A. Section 70.2 Definitions

Approved Sampling Device

This new definition, *approved sampling device,* would mean a sampling device approved by the Secretary and the Secretary of Health and Human Services under 30 CFR part 74 (Coal Mine Dust Sampling Devices). The proposed definition would clarify that whenever a sampling device is used by operators to comply with the requirements of part 70, the device must be approved for use in coal mines under part 74.

Coal Mine Dust Personal Sampler Unit (CMDPSU)

This new definition, *coal mine dust personal sampler unit (CMDPSU),* would mean a personal sampling device that is approved under 30 CFR part 74, subpart B. The definition is necessary to distinguish between the two types of coal mine dust monitoring technology approved under part 74 and to clarify the applicability of the proposed rule to each approved sampling device. The existing gravimetric sampling device used by operators would be considered a CMDPSU under this proposed definition.

Continuous Personal Dust Monitor (CPDM)

This new definition, *continuous personal dust monitor (CPDM),* would mean a personal sampling device approved under part 74, subpart C. The definition is necessary to distinguish between the two types of coal mine dust monitoring technology approved under part 74 and to clarify the applicability of proposed rule provisions to each approved sampling device.

Designated Area (DA)

The proposal would retain the existing requirement that a DA is an area of the mine identified by the operator in the mine ventilation plan, and approved by the District Manager. It would make a non-substantive change to the existing definition to clarify that the DA would be identified by a four-digit identification number assigned by MSHA. The proposal would be consistent with the existing practice of identifying DAs and would incorporate language from existing § 70.208(e).

Equivalent Concentration

This new definition, *equivalent concentration,* would mean the concentration of respirable coal mine dust expressed in milligrams per cubic meter of air (mg/m^3), determined by dividing the weight of dust in milligrams collected on the filter of an approved sampling device by the volume of air in cubic meters passing through the collection filter (sampling time in minutes times the sampling airflow rate in cubic meters per minute), and then converting this concentration to an equivalent 8-hour exposure as measured by the Mining Research Establishment (MRE) instrument. When the approved sampling device is:

(1) The CMDPSU, the equivalent concentration is determined by first multiplying the concentration of respirable coal mine dust by the MRE conversion factor prescribed by the Secretary and then normalizing this quantity to an 8-hour exposure measurement by multiplying the MRE-equivalent concentration by the factor *t/480,* where *t* is the sampling time in minutes if longer than 8 hours.

(2) The CPDM, the device shall be programmed to directly report the end-of-shift equivalent concentration as an MRE 8-hour equivalent concentration.

(3) Either the CMDPSU or CPDM and the sampled work shift is less than 8 hours, the value of *t* used for normalizing the MRE-equivalent concentration to an 8-hour exposure measurement shall be 480 minutes.

This proposed definition is derived from existing § 70.206 which provides a formula to convert measured concentrations of respirable dust to an equivalent concentration as measured with an MRE instrument. MSHA has approved two sampling devices under 30 CFR part 74 for measuring the concentration of respirable coal mine dust—the CMDPSU and the CPDM. Under the proposed definition, dust concentration measurements from a CMDPSU would continue to be converted to MRE equivalent concentrations. Dust concentration measurements from a CPDM would be converted to CMDPSU equivalent concentrations because NIOSH researchers have determined that measurements of respirable dust concentrations using the CMDPSU and the CPDM are comparable (Page, S., *et al.,* 2008).

The proposed definition would address work shifts in coal mines, which frequently exceed 8 hours. A miner working for 10 hours at an average concentration of 2.0 mg/m^3 would be exposed to more respirable coal mine dust than a miner working for 8 hours at the same average concentration. To provide effective protection to miners working longer than 8 hours, the proposal would require that dust concentration measurements for these shifts be converted to an 8-hour equivalent concentration as measured by the MRE instrument. The proposal is consistent with generally accepted industrial hygiene practices that adjust worker exposures to account for all time worked, recognizing that an extended work shift results in a shorter time to recover before the next exposure.

Under the proposed rule, converting a respirable dust concentration measured by an approved sampling device to an equivalent concentration would be accomplished as follows:

First, for all sampled shifts, the measured concentration would be multiplied by a constant factor prescribed specifically for the approved sampling device by the Secretary to convert the concentration to an MRE-equivalent concentration (conversion factor). Since 1980, measurements of respirable coal mine dust using the approved cyclone-based gravimetric devices (*i.e.,* the CMDPSU) operating at a flow rate of 2.0 liters per minute (*i.e.,* 0.002 m^3/min) were multiplied by the conversion factor of 1.38 prescribed for that device. Under the proposal, MSHA would continue to apply the conversion factor of 1.38 for the CMDPSU. Application of this factor would compensate for the difference in dust collection characteristics and make the measurements equivalent to those of an MRE instrument. As explained in the preamble discussion related to § 70.201, the MRE conversion factor for the CPDM is 1.05.

Second, if the sampled shift is longer than 8 hours, the MRE equivalent concentration would be multiplied by t/480, where "t" is the sampling time for the longer sampled shift (> 480) in minutes, to make it equivalent in dosage to the concentration as measured by an MRE instrument on an 8-hour work shift. The formula for an equivalent concentration is:

$$Equivalent\ concentration\ \left(mg/m^3\right) = 1.38 \times \left(\frac{accumulated\ dust\ \left(mg\right)}{t \times airflow\ rate}\right) \times \frac{t}{480}$$

where airflow rate = 0.002 m³/min. The product of "t" and the airflow rate is the total volume of air from which dust is accumulated on the filter.

For example, a DO sample is collected with a CMDPSU over a 9-hour (540 min) shift and the amount of dust accumulated during the shift is 1.5 mg. The MRE equivalent concentration would be 1.92 mg/m³ [1.38 MRE conversion factor × 1.5 mg/(540 min × 0.002 m³/min)]. Under the proposed definition, this quantity would be multiplied by 540/480, yielding an equivalent concentration of 2.16 mg/m³. This adjustment allows MSHA to compare the full-shift measurement to the applicable respirable dust standard.

Since the existing standard was based on the assumption that exposure occurs over an 8-hour shift, the 8-hour exposure corresponds to a daily accumulated amount of respirable coal mine dust of 16 mg-hr/m³ (8 hours × 2.0 mg/m³) as measured by the MRE instrument. The proposed definition of equivalent concentration would continue this same 16 mg-hr/m³ daily limit, regardless of the length of the working shift being sampled. In the previous example of the 9-hour shift with a dust accumulation of 1.5 mg, the amount of dust accumulated during the sampled working shift is the same whether over 8 hours at an average of 2.16 mg/m³ or over 9 hours at an average of 1.92 mg/m³. In either case, the MRE equivalent exposure measurement for the sampled shift is 17.3 mg-hr/m³, which exceeds the 2.0 mg/m³ standard for an 8-hour shift (*i.e.,* 16 mg-hr/m³).

Using an approved gravimetric sampler, the standard for respirable quartz dust (*i.e.,* 0.1 mg/m³) will be exceeded when the total amount of quartz dust on a filter during the work shift exceeds 0.07 mg, regardless of the shift's length. For example, if 0.08 mg of quartz dust were accumulated over the course of a 12-hour shift, the equivalent concentration of respirable quartz dust would be calculated as:

$$1.38 \times \frac{0.08mg}{720\ \text{min} \times 0.002m^3/\text{min}} \times \frac{720\ \text{min}}{480\ \text{min}} = 0.115mg/m^3$$

This is the same value as would be obtained if 0.08 mg of quartz dust were accumulated on an 8-hour shift.

$$1.38 \times \frac{0.08mg}{480\ \text{min} \times 0.002m^3/\text{min}} = 0.115mg/m^3$$

For the CPDM, MSHA believes the manufacturer can make modifications to the CPDM firmware so that the device will automatically report the concentration measurements as MRE equivalent concentrations. After the certified person programs the CPDM for the length of the full shift of the occupation, work position, or DA being sampled, the CPDM would be capable of providing the 8-hour equivalent concentration. The CPDM's end-of-shift readout would provide the equivalent concentration.

The proposed definition of *equivalent concentration* is necessary to protect miners who work nontraditional or extended shifts from unnecessary health risks.

Mechanized Mining Unit (MMU)

The proposed definition of *mechanized mining unit (MMU)* would incorporate existing requirements in § 70.207(f)(1) and (f)(2) and make revisions. Like the existing standard, MSHA would assign each MMU a four-digit identification number which remains with the MMU. When two sets of mining equipment are used in a series of working places within the same working section and only one production crew is employed, the two sets of equipment will be identified as a single MMU.

The proposal would revise the definition to require that each set of mining equipment be identified as a separate MMU if two sets of mining equipment are used in a series of working places in the same working section and two production crews are employed. This would be a change from the existing standard which requires that the MMUs must be "simultaneously engaged in the production of material" within the same working section in order to be identified as separate MMUs. MSHA believes the change is necessary because miners can be exposed to respirable dust and quartz when there is no simultaneous production of material. The proposal would protect the health of miners on the working section.

The proposal would also make a conforming change in a reference since existing § 70.207(e) would be redesignated as proposed § 70.207(b).

Normal Production Shift

The proposed definition of *normal production shift* would revise the existing definition to mean (1) a production shift during which the amount of material produced by an MMU is at least equal to the average production recorded for the most recent 30 production shifts or (2) if fewer than 30 shifts of production data are available, a production shift during which the amount of material produced by an MMU is at least equal to the average production recorded by the operator for all of the MMU's production shifts.

In its 1995 Criteria Document, NIOSH recommended that, consistent with standard industrial hygiene practice (which requires exposure measurements be collected during typical work shifts), for a production shift to be considered a "normal production shift," it must produce at least 80% of the average production over the last 30 production shifts. NIOSH stated that the definition of a normal production shift should be similar to or more stringent than that

used when seeking approval of the dust control plan. NIOSH further stated that a production-level threshold should ensure that exposure conditions are comparable between sampled and unsampled shifts.

The Dust Advisory Committee recommended that respirable dust samples be taken when production is sufficiently close to normal production, which it stated should be defined as 90% of the average production of the last 30 production shifts.

MSHA believes that when an MMU has operated for at least 30 production shifts, a normal production shift should represent at least the average production of those shifts. MSHA's existing practice is to use 30 production shifts as a benchmark for establishing an MMU's typical output. MSHA believes that 30 production shifts provide sufficient historical data to give a reliable representation of an MMU's typical production. MSHA also believes that using a production level equal to at least the average production of the most recent 30 production shifts as the production level for sampling would ensure that samples are representative of the dust levels to which miners are actually exposed. The proposal would assure that production during sampling is representative of normal mining conditions.

Under the proposal, when an MMU has operated for fewer than 30 production shifts, the average production of all production shifts would be considered to determine a "normal production shift." MSHA believes it is essential to use records from all of an MMU's production shifts when it has operated for fewer than 30 shifts because this would result in a more reliable determination of the shift's production and a miner's exposure.

Under existing practice, if an operator encounters unique mining conditions, such as when the coal seam narrows due to a rock intrusion running through the coal bed, MSHA allows the operator to submit any relevant information to the District Manager so that average production levels for sampling can be adjusted. Under the proposal, MSHA would continue this practice.

The level of coal production has a significant impact on dust generation. As production increases, the amount of respirable coal mine dust generated also increases. Under the existing definition of "normal production shift," MSHA intended to accommodate fluctuations in mining cycles; however, MSHA believes that the existing definition of at least 50% of average production for the last 5 valid samples results in sampling during shifts that are not representative of typical conditions. If an operator's bimonthly dust samples are taken when production is substantially below average production, the sample results will underestimate miners' typical dust exposure. The 1992 Coal Mine Respirable Dust Task Group (U.S. Department of Labor, MSHA, 1992) acknowledged that the procedure for defining a normal production shift for sampling purposes was inadequate and that the sampling program was susceptible to intentionally reduced production during sampling periods.

MSHA believes that the proposed definition of "normal production shift" would significantly improve miners' health by requiring operators' samples to be collected during shifts that are more representative of typical conditions at the mine. The Agency solicits comment on the approach taken in the proposed rule. Please be specific in your comments and include the rationale for suggested alternatives.

Other Designated Occupation (ODO)

The proposal would add a new definition for *other designated occupation (ODO).* Under the proposal, the ODO would be defined as another occupation on a mechanized mining unit that is designated by the District Manager for sampling. Each ODO would be identified by a four-digit identification number assigned by MSHA.

MSHA designates high risk occupations to be sampled by operators. These "designated occupations" (DOs) are those based on Agency data and experience that are exposed to the highest respirable dust concentrations in the MMU. However, MSHA's sampling data reveal that limiting sampling to the DO may not adequately protect other miners in the MMU. For this reason, MSHA identifies additional underground occupations, other than the DOs, that also present a risk for excessive dust exposure. Under MSHA's existing practice, these other occupations are identified as "non-designated occupations," but would be referred to as ODOs under the proposal. MSHA would continue its existing practice of using historical sampling data on the MMU, as well as evaluating the mining system, in order to identify ODOs.

Quartz

The proposal would revise the existing definition of *quartz* to mean crystalline silicon dioxide (SiO_2) as measured by:

(1) MSHA Analytical Method P–7: Infrared Determination of Quartz in Respirable Coal Mine Dust; or

(2) Any method approved by MSHA as providing a measurement of quartz equivalent to that obtained by MSHA Analytical Method P–7.

The proposed definition would provide notice to interested parties of the analytical procedure that MSHA uses to measure quartz in coal mine dust. It would also provide notice to certified laboratories that may want to perform quartz analyses using the same procedure.

The definition of "quartz" would be expanded to provide MSHA the flexibility to accommodate new, improved technology for analyzing quartz once it is demonstrated to provide quartz measurements that are equivalent to the existing analytical method.

Representative Samples

The proposal would add a new definition for *representative samples.* Representative samples would be defined as respirable dust samples that reflect typical dust concentration levels and normal mining activity in the active workings during which the amount of material produced is equivalent to a normal production shift. The term "normal production shift" is discussed elsewhere in the preamble related to proposed § 70.2.

MSHA intends that, under the proposal, samples would be representative if taken when miners are in positions and physical locations performing tasks that they usually perform on non-sampling days. To be considered representative samples, operators should also sample when mining activities, such as production methods, reflect usual operations on non-sampling days (*e.g.,* when approved cut sequences are followed, and the sequence of mining includes the turning of multiple crosscuts).

The proposed definition would ensure that operators conduct dust sampling when working conditions are representative of working conditions during periods of non-sampling; this would avoid introducing bias into sampling. To provide optimum protection for miners' health, sampling must accurately represent miners' dust exposures. This would allow operators and MSHA to effectively evaluate the performance of dust controls and the adequacy and effectiveness of operators' approved plans.

Weekly Accumulated Exposure (WAE)

The proposal would add a new definition, weekly accumulated

exposure (WAE), which would apply when operators use a CPDM. Under the proposal, *weekly accumulated exposure (WAE)* would be defined as the total exposure to respirable coal mine dust, expressed in milligram-hour (mg-hr) per cubic meter of air (mg-hr/m^3), accumulated by an occupation during a work week (Sunday thru Saturday). The proposed definition includes the calculation for determining the WAE.

The WAE would be calculated by first multiplying each daily end-of-shift equivalent concentration, expressed as mg/m^3 as reported by the CPDM (*i.e.,* the average exposure over the shift), by 8 hours to obtain the total daily exposure (concentration × hours = exposure, expressed as mg-hr/m^3). The daily end-of-shift equivalent concentration would be the respirable dust concentration for the sampled entity expressed as an 8-hour equivalent, even when the shift length exceeds 8 hours (see proposed definition of equivalent concentration). Since the daily end-of-shift equivalent concentration is an 8-hour equivalent, it would be multiplied by 8 hours to obtain the total daily exposure, regardless of actual shift length.

The second step in calculating the WAE would be to total the daily exposures of the occupation sampled for the work week. The result would be the accumulated exposure for the work week. For example: Miner "A" works Sunday–Thursday, 10 hours each day. Assuming the applicable standard is 1.5 mg/m^3, the following data are obtained:

Day	Shift length (hrs)	End-of-shift equivalent concentration reported	Daily accumulated exposure
Sun	10	1.5 mg/m^3	12 mg-hr/m^3 (1.5 mg/m^3 × 8 hrs).
Mon	10	1.5 mg/m^3	12 mg-hr/m^3.
Tue	10	1.5 mg/m^3	12 mg-hr/m^3.
Wed	10	1.5 mg/m^3	12 mg-hr/m^3.
Thur	10	1.5 mg/m^3	12 mg-hr/m^3.
WAE			= 60 mg-hr/m^3.

MSHA believes that determining the WAE for an occupation in the manner proposed would cause mine operators to closely monitor the daily accumulated exposure of each occupation sampled during the week. If the accumulated exposure approaches the weekly permissible accumulated exposure (WPAE), defined below, when additional shifts remain to be worked, it would indicate that the average equivalent concentration is getting close to exceeding the applicable standard. The operator may then need to take action to avoid overexposing the miners assigned to that occupation.

Weekly Permissible Accumulated Exposure (WPAE)

The proposal would add a new definition, *weekly permissible accumulated exposure (WPAE),* which would apply when operators use a CPDM. WPAE would be defined as the maximum amount of accumulated exposure to respirable coal mine dust, expressed in mg-hr per cubic meter of air (mg-hr/m^3), permitted for an occupation during a 40-hr work week (Sunday thru Saturday). The WPAE would be determined by multiplying the applicable respirable dust standard by 40 hours. For example, if the applicable standard were 1.5 mg/m^3, the WPAE would be 60 mg-hr/m^3 (40 hours × 1.5 mg/m^3).

MSHA believes that the proposed WPAE definition would enable mine operators to effectively compare a miner's weekly accumulated exposure (WAE), defined previously, with the WPAE to evaluate compliance with the applicable standard at the completion of the work week.

B. Section 70.100 Respirable Dust Standards

The proposed rule would, over a phase-in period, lower the concentration limit for respirable coal mine dust in coal mines.

Proposed paragraph (a)(1) would retain the existing requirement that mine operators continuously maintain the average concentration of respirable dust in the mine atmosphere during each shift to which each miner in the active workings of each mine is exposed at or below 2.0 mg/m^3 of respirable dust.

Proposed paragraphs (a)(2) through (a)(4) are new and would require mine operators to lower dust levels, over a 24-month phase-in period, from the existing level of 2.0 mg/m^3 of air to 1.0 mg/m^3. MSHA and mine operator data indicate that, under the existing sampling program, the majority of miners' exposures are at or below the limits in the proposed rule. These data reflect sampling and measurement requirements under MSHA's existing standard. MSHA anticipates that the cumulative effects of the major changes in the proposal, *i.e.,* lowering the respirable dust standard, single shift sampling, full shift sampling, and the definition of "normal production shift", would result in higher exposures than those under the existing program. MSHA anticipates that most mines would have to implement additional controls and work practices to reduce dust levels to those expected under the proposal (see Section VIII, Feasibility, in the preamble). In a small number of cases, MSHA expects that operators may have to initially: (1) Limit production; (2) reconfigure major ventilation sources, *e.g.,* install a new shaft; or (3) install major ventilation controls. MSHA anticipates that, over time, these operators would be able to meet the proposed exposure limits. MSHA believes that with the proposed phase-in of exposure limits, all coal mines, regardless of their size and type of mining system, would have sufficient time to either upgrade existing controls or to install additional measures to meet the proposed requirements.

MSHA is proposing a 24-month phase-in period to allow the mining community the opportunity to identify, develop and implement feasible engineering controls; train miners and mine management in new technology and control measures; and to improve their overall dust control program. The phase-in period is consistent with the Dust Advisory Committee's recommendation. MSHA believes that the phase-in period would provide an appropriate amount of time for mine operators to feasibly come into compliance with the new proposed limit. MSHA specifically requests comment on the phase-in period. Please be specific in your comments and include the rationale for suggested alternatives.

MSHA is proposing a 1.0 mg/m^3 standard as a time-weighted average for an 8-hour shift based on the best available evidence that shows this level would significantly reduce miners' risks of material impairment of health or

functional capacity. Section 101(a)(1) of the Mine Act requires that the Secretary take certain action when a recommendation to issue a rule, accompanied by a Criteria Document, is received from NIOSH. The Secretary must refer the recommendation to an advisory committee, or publish the recommendation as a proposed rule, or publish in the **Federal Register** the determination and reasons not to do so.

In 1995, NIOSH published and submitted to MSHA a Criteria Document on *Occupational Exposure to Respirable Coal Mine Dust.* Consistent with the Mine Act, the Secretary referred the NIOSH Criteria Document to an advisory committee (Dust Advisory Committee). This proposal is consistent with recommendations of the NIOSH Criteria Document and the Dust Advisory Committee.

In its Criteria Document, NIOSH recommended respirable dust exposures be limited to 1 mg/m^3 as a time-weighted average (TWA) concentration for up to 10 hours per day during a 40-hour work week as measured according to existing MSHA methods. This recommended exposure level (REL) was based on exposure-response studies of U.S. coal miners participating in the National Study of Coal Workers' Pneumoconiosis (NSCWP) and sampling data collected by the Bureau of Mines from 1969–1971 and MSHA from 1985–88. NIOSH used an average concentration of 0.5 mg/m^3 of respirable dust in its disease risk estimates because, at that time, it constituted the lower range of the exposure data. NIOSH determined that extrapolations beyond the range of the existing exposure data would have carried considerable uncertainty. NIOSH found that, at a mean concentration of 0.5 mg/m^3, the excess risk of morbidity from progressive massive fibrosis at age 65 exceeded 1/1,000 for all durations of exposure and coal ranks evaluated, including 15 years of exposure to medium/low-rank coal, believed to be least toxic. NIOSH expected that long-term average dust concentrations would be below 0.5 mg/m^3 if miners' daily exposures were kept below the REL of 1 mg/m^3 (NIOSH 1995).

MSHA's QRA used respirable dust exposure data collected from 2004 through 2008 and published quantitative studies on coal workers' morbidity from black lung (Attfield and Seixas, 1995) and mortality from nonmalignant respiratory diseases (Attfield and Kuempel (2008)) and severe emphysema (Kuempel *et al.,* 2009(a)) to estimate excess disease risks in U.S. miners. The QRA estimated disease risks after 45 years of full-shift occupational exposure at observed exposure levels under the existing standard. The QRA results indicate that, in every exposure category, exposure under the existing standards places miners at a significant risk of material impairment of health. In addition, MSHA found that average dust concentrations exceed the proposed exposure limit of 1.0 mg/m^3 at a number of work locations in every occupational category. The percentage of work locations that would exceed the proposed exposure limit of 1.0 mg/m^3 ranges from less than 1 percent for a few surface occupations to more than 70 percent for miners working on the longwall tailgate. The percentages are generally greater for underground occupations than for surface occupations. A statistically significant percentage of surface work locations (generally cleaning plant operations and surface drilling) have average dust concentrations exceeding the proposed exposure limit. For part 90 miners, the average dust concentration exceeds 0.5 mg/m^3 at more than 20 percent of the work locations (see Section V of this preamble for a more detailed discussion of the QRA).

In 1996, the Dust Advisory Committee also recognized that overexposure to respirable coal mine dust remained a problem and recommended unanimously that MSHA consider lowering the allowable level of exposure to coal mine dust. The Committee reviewed MSHA monitoring data and scientific studies provided by NIOSH, including its 1995 Criteria Document. The Committee concluded that "there is substantial evidence that either a significant number of miners are currently being exposed to coal mine dust at levels well in excess of 2.0 mg/m^3 or that the current exposure limit for coal mine dust is insufficiently protective."

NIOSH also recommended that for single, full-shift samples used to determine noncompliance, MSHA should make no upward adjustment to account for measurement uncertainty. The Dust Advisory Committee made the same recommendation, but it was not supported by all of the Committee members. The proposed rule does not adopt this recommendation; a more detailed discussion on adjusting the exposure limit to account for measurement uncertainty is included in the section-by-section analysis for proposed § 70.207 and in Appendix A of the preamble.

While the proposed 1.0 mg/m^3 standard would significantly reduce the risk of impairment, disease, and premature death, MSHA's QRA reveals some remaining risk at the proposed limit. However, MSHA believes that other provisions of the proposal (*e.g.,* changes in the definition of normal production shift, and sampling for a full shift) would reduce this risk. The impact of these other provisions was not considered in the QRA.

Proposed §§ 70.100(b)(2), 75.350(b)(3)(i)(B) and 90.100(b) would revise the existing requirements that operators must maintain the concentration of respirable dust at or below 1.0 mg/m^3, to 0.5 mg/m^3 of air, for intake air courses, belt air courses, and for part 90 miners to conform to the proposed lower limit. MSHA is proposing a phase-in period of six months for operators to meet this lower level. MSHA has included these conforming changes in the proposal in recognition of the Agency's longstanding regulatory history and policy with respect to areas of the mine and part 90 miners where dust presents additional health risks. MSHA is proposing a six-month phase-in because, based on Agency data for these areas of the mine and part 90 miners, MSHA believes this phase-in period would provide an appropriate amount of time for mine operators to feasibly come into compliance with the new proposed limits. MSHA solicits comment on the proposed phase-in periods for lowering the respirable dust limits from 1.0 mg/m^3 to 0.5 mg/m^3 for intake air courses, belt air courses, and part 90 miners. Please include a detailed rationale with any comment or recommendation that is submitted.

As presented in the Preliminary Regulatory Economic Analysis (PREA) and summarized later in this preamble, MSHA has determined that this proposed standard is feasible, both technologically and economically. Dust exposures at most mine operations average less than 1.0 mg/m^3 under existing MSHA and operator sampling and measurement programs. MSHA anticipates that proposed changes to the existing program initially would cause an increase in operations where dust concentrations would exceed the proposed exposure limits. As discussed in the PREA, however, there are various engineering control methods and work practices that operators can use to meet the proposed standards. Since most methods of reducing exposure to respirable dust already exist and have been demonstrated to be both technologically and economically feasible and effective, MSHA believes that the two year phase-in period is sufficient time for mine operators to reduce respirable dust exposures to an acceptable level.

C. Section 70.101 Respirable Dust Standard When Quartz Is Present

The proposed rule would revise the standard for respirable dust when quartz is present in coal mines. Overexposure to respirable coal mine dust containing quartz has been associated with some miners developing silicosis and black lung, irreversible but preventable lung diseases, which ultimately may be fatal.

Proposed paragraph (a) is new and would establish a separate standard for respirable quartz. It would require operators to continuously maintain the average concentration of respirable quartz dust at or below 0.1 mg/m³ (100 μg/m³) during each shift.

The existing standard limits miners' exposure to respirable quartz by reducing the applicable respirable dust standard (or limit) based on a formula that was prescribed by the Department of Health, Education and Welfare (now DHHS). The formula, which applies when the respirable coal mine dust contains more than 5.0 percent quartz, is 10 divided by the concentration of quartz, expressed as a percentage. The formula results in a continuous reduction in the respirable dust standard as the quartz content in respirable dust in the mine atmosphere increases over 5 percent (*i.e.,* the higher the percentage of quartz, the lower the respirable dust standard). Application of the formula was designed to limit a miner's exposure to respirable quartz to 0.1 mg/m³ (100 μg mg/m³), based on a 2.0 mg/m³ respirable dust standard.

One commenter on the CPDM RFI stated that controlling respirable dust containing silica to the current 2.0 mg/m³ standard does not provide adequate protection for miners because of the greater lung toxicity of crystalline silica. MSHA is not establishing a new quartz limit in this rulemaking. MSHA will separately address a respirable crystalline silica standard for mining. (See the April 26, 2010 Regulatory Agenda entry at *http://www.msha.gov/regsinfo.htm.*

Proposed paragraph (b) would retain the existing requirement to limit a miner's exposure to respirable quartz by establishing a reduced respirable dust standard. To be consistent with paragraph (a), paragraph (b) would apply when the concentration of respirable quartz dust exceeds 100 μg/mg³. Under the existing standard, if analysis of an MSHA inspector respirable dust sample contains more than 5 percent quartz, then a reduced respirable dust standard is calculated and the operator is notified of the reduced standard. Under the proposal, the formula could not be used to establish a dust standard greater than the dust standard under proposed § 70.100(a).

A commenter on the CPDM RFI recommended gravimetric sampling for longer time periods or over multiple shifts to assure an adequate amount of total dust content is achieved to analyze for quartz. MSHA believes, that with the current analytical procedure (NIOSH Method P–7, infrared analysis), it is not necessary to sample for longer than an 8-hour shift. The limit of quantification of Method P–7 is 25 μg, which is the lowest amount of quartz that can be identified and quantitatively measured with accuracy and precision. If this mass is accumulated on a filter during an 8-hour shift with the sampler operating at 2.0 liters per minute, the concentration of quartz [1]

$$\frac{\text{Weight gain}}{(\text{Flowrate})(\text{Time})(.001)} = \frac{25\ \mu\text{g}}{(2.0\ \text{liter/min})\ (480\ \text{minutes})(.001\ \text{liter/m}^3)} \times 1.38 = 36\ \mu\text{g/m}^3$$

(approximately 36 μg/m³) would be well below the standard of 100 μg/m³. If there is too little quartz to analyze, exposure is well below the standard.

D. Section 70.201 Sampling; General and Technical Requirements

The proposed rule would revise the operator sampling requirements in existing § 70.201 and would phase-in the use of CPDMs to take respirable dust samples of the Designated Occupation (DO) and Other Designated Occupations (ODO), a new term defined in proposed § 70.2. MSHA is also proposing that operators take samples, with either a CMDPSU or CPDM, of DAs that are not associated with an MMU.

Under the existing standard, coal mine operators and MSHA use approved CMDPSUs to determine the concentration of respirable dust in the coal mine atmosphere. The CMDPSU samples the mine atmosphere by drawing mine air through a filter cassette that collects respirable coal mine dust. At the end of a full shift or 8 hours, whichever time is less, the cassette is sent to MSHA for processing. Each cassette is weighed under controlled conditions to determine the average concentration of respirable coal mine dust to which the affected miners were exposed. The existing process results in a delay between the time a sample is taken and when results are available to mine operators, miners, and MSHA.

The CPDM is a respirable dust sampler and gravimetric analysis device incorporated into the miner's cap lamp battery case as a single package located on the belt. The new cap lamp battery case contains all the components, including two separate batteries, to enable the dust monitor and cap lamp to operate independently. Air from a miner's work environment enters the sampling device through an inlet located adjacent to the lens of the cap light on the miner's hard hat and flows via a flexible tube that runs parallel to the lamp cord to the belt-mounted device. The air stream is first coursed through a Higgins-Dewell (HD) cyclone at a flow rate of 2.2 L/min to separate the non-respirable dust, so that only airborne particles that could penetrate to the lung will be analyzed by the device. From there, the air stream flows through: (1) A heater to remove excess moisture; (2) a 14-mm diameter glass fiber filter where the particles are collected; (3) a flow rate sensor; and (4) a computer-controlled pump.

The CPDM is designed to operate continuously for up to 12 hours. The display on the device continuously shows: (1) The respirable dust concentration calculated at distinct 30-minute intervals; (2) the average respirable dust exposure from the beginning of the shift; and (3) the percent of exposure limit. Through the display, both the miners wearing the device and the mine operator are aware of respirable dust exposures. This information can be used to validate whether dust control parameters are working as intended to assure that miners are not exposed to excessive concentrations of respirable coal mine dust.

The CPDM is capable of being used in a shift mode, in which the device is programmed by certified persons to operate for specific shift lengths (*e.g.,* 8, 10, 12 hours) to monitor a Designated Occupation or other sampling entity's exposure, or in an engineering mode for

[1] See equation above.

shorter-term evaluations. If the device is operated in an engineering mode, the certified person would operate it for short periods of time within the shift to record respirable dust levels during specific mining activities or at specific dust-generation sources in the mine. The display has various screens that show the: (1) Time of day; (2) elapsed time since beginning of the shift; (3) total amount of respirable dust accumulated on the filter since the start of sampling, which is stored in an internal memory for analysis; (4) dust concentrations; (5) operational parameters including flow rate, filter pressure, temperature, etc.; and (6) a bar graph of the average respirable dust concentration during the entire sampling period. On the bar graph, each bar represents the average concentration value for each previous 30-minute interval, with a new bar added to the graph every 30 minutes. This, along with other information, is stored in the CPDM and can be accessed and downloaded with a personal computer at the end of the shift for analysis and recordkeeping.

MSHA and NIOSH published the part 74 final rule on April 6, 2010 (75 FR 17512) that revised the approval requirements for the CMDPSU and established new approval requirements for the CPDM. The new CPDM approval requirements establish a science-based, feasible baseline for the performance of the new CPDM technology based on published NIOSH research (Volkwein, JC, *et al.,* 2006, and Volkwein, JC *et al.,* 2004). The final rule reflects current evaluation methods for assessment of direct-reading monitors. These methods have been summarized and issued as general guidelines by NIOSH in "Components for the Evaluation of Direct-Reading Monitors for Gases and Vapors," (Kennedy, ER, *et al.,* 1995). The requirements also reflect the state-of-the-art technology of the CPDM prototype.

NIOSH requires all applicants for CPDM sampling device approvals to use the NIOSH testing procedure "Continuous Personal Dust Monitor Accuracy Testing" to evaluate the accuracy, reliability, precision, and bias of a CPDM. The procedure is available at the NIOSH Web site: *http://www.cdc.gov/niosh/mining*. The procedure requires that testing be performed under diverse environmental conditions and that test results be submitted, in writing, to NIOSH. The protocol assures that all CPDMs are evaluated consistently. As stated in the preamble to the part 74 final rule, NIOSH will provide assistance to applicants, as necessary, to make the arrangement of such testing feasible.

NIOSH researchers (Page, S *et al.* 2008) determined that measurements of respirable dust concentrations using the CPDM and CMDPSU are comparable. The MRE was used as the basis for the existing coal mine respirable dust standards and had been designed specifically to match the United Kingdom British Medical Research Council (BMRC) criterion. The CMDPSU is used with a 1.38 multiplier to convert readings to the BMRC criterion.

In order to compare CPDM measurements with those of the CMDPSU, NIOSH conducted field research. Researchers used a stratified random sampling design that incorporated a proportionate allocation strategy to select a sample of MMUs representative of all U.S. underground coal mines. A sample of 180 MMUs was chosen, representing approximately 20% of the MMUs in production at the time the sample was selected (September 2004). Dust concentrations were monitored concurrently by both CMDPSUs and CPDMs for a full shift. A total of 129 valid CPDM/CMDPSU dust sample sets were obtained. A weighted linear regression analysis of this database shows that, in comparison with the CMDPSU, the CPDM requires a mass equivalency conversion multiplier of 1.05 [95% Confidence Interval (1.03 to 1.08)] to produce a concentration that is an MRE equivalent concentration similar to the CMDPSU. This research shows that the two types of sampling units are very comparable due to this linear relationship.

The Dust Advisory Committee unanimously recommended that CPDM technology, when verified, be broadly used along with other sampling methods for evaluation of dust control at all MMUs and other high risk locations. The Committee further recommended that once verified as reliable, MSHA should use CPDM data for assessing operator compliance in controlling miner exposures and should consider use of CPDM data in compliance determinations.

MSHA published a request for information on October 14, 2009 (74 FR 52708) on the use of the CPDM as a sampling device to measure a miner's exposure to respirable coal mine dust. All commenters generally agreed that the required use of a CPDM would enhance the protection of miners' health.

Under the proposed rule, § 70.201(a) would require the operator to use the CMDPSU to take respirable dust samples of the DO in each MMU until replaced by the CPDM. On [date 12 months after the effective date of the final rule], operators must replace the CMDPSU with the CPDM to sample the DO in each MMU, unless notified by the Secretary. The operator would be allowed, however, to start using the CPDM anytime during the 12-month phase-in period.

Proposed paragraph (b), which is new, would require that DAs associated with an MMU be sampled with an approved CMDPSU until replaced by a CPDM. Under the existing standard, DAs associated with an MMU are sampled with an approved CMDPSU. Proposed paragraph (b) would also require that on [date 18 months after effective date of the final rule], DAs associated with an MMU would be redesignated as ODOs. The proposal would require existing DAs associated with an MMU to be designated as ODOs because the CPDM would be used to measure respirable dust exposure of occupations on an MMU rather than areas associated with an MMU. The proposal would help assure that the sample reflects an accurate measurement of the occupation monitored.

To provide comparable protection for ODOs as for DOs, proposed paragraph (c) would require that the CPDM be used to sample ODOs after a proposed phase-in period of 18 months, unless notified by the Secretary.

The proposed rule would require, over an 18-month period, a phase-in of the use of CPDMs so that manufacturers have enough time to produce the necessary quantity of units and that MSHA and operators have enough time to train necessary personnel in the use and care of the device. The Agency recognizes that availability of the device may present logistical and other issues at the time the final rule becomes effective. The Agency intends to address the issue of availability in two ways. First, the proposal would require the use of the CPDM to sample (1) the DO in each MMU, and (2) each ODO, within a 12-month and 18-month period, respectively, unless notified by the Secretary. If MSHA determines that there will be logistical and feasibility issues surrounding the availability of CPDMs by the time the final rule becomes effective, the Agency will, through publication in the **Federal Register**, notify the public of the Agency's plans including any other action as necessary. Second, assuming no logistical or feasibility issues concerning the availability of CPDMs, and depending upon manufacturer projections, if CPDMs are not available in sufficient quantities, MSHA will accept, as good faith evidence of compliance with the final rule, a valid,

bona fide, written purchase order with a firm delivery date for the CPDMs.

For CPDM implementation, MSHA considered requiring: All coal mines to begin using them on the effective date of the final rule; different phase-in periods at underground coal mines based on the type of mining operations and mining heights (*e.g.,* longwall; continuous miner operations subject to reduced standards due to quartz and with mining heights that exceed 40 inches; or mining operations with mining heights that are 40 inches or less); and different phase-in periods for specific geographic regions (represented by Coal Mine Safety and Health Districts) where MSHA is aware of higher quartz concentrations in coal mine dust, higher respirable coal mine dust levels, and higher prevalence of CWP among working underground coal miners. After reviewing the options, MSHA believes that it would not be practical or feasible to adopt implementation dates based on the methods of mining or mine locations, or to require use of CPDMs in all mines on the effective date of the final rule. Instead, the proposed rule would require operators to begin using CPDMS to sample certain underground occupations after a 12- or 18-month phase-in period. The Agency requests comments on the proposed phase-in of the use of CPDMs, including the time period, and the Agency's intent with respect to availability of CPDMs. Please be specific in your comments and include the rationale for suggested alternatives.

The proposed rule would move existing § 70.201(d), which requires that operators, during the time for abatement of a dust citation, take corrective action to lower dust concentrations and then take additional dust samples. These requirements would be moved to proposed §§ 70.207 and 70.209, which address sampling when using a CMDPSU.

Proposed paragraph (d) would permit the operator to continue to use approved CMDPSUs or CPDMs to sample respirable coal mine dust in each DA that is not associated with an MMU (*i.e.,* an outby DA). MSHA is allowing operators to continue to use the CMDPSU because these samples are area samples and CPDMs are designed for a person to wear. MSHA does not believe that requiring the CPDM to be used to sample DAs is the best use of the device. The Agency believes that the CMDPSU and reports of sample results will provide the information needed to evaluate the dust controls used in the DA and to ensure miners working in these areas are protected.

Proposed paragraph (e), redesignated from existing paragraph (b), would retain the requirement that sampling devices be worn or carried directly to and from the MMU or DA to be sampled, and be operated portal to portal. It would also revise the existing standard and require that sampling devices remain with the occupation or DA being sampled and must be operational during the entire shift, even when the shift exceeds 8 hours (extended shift). This would include the time spent in the MMU or DA and while traveling to and from the MMU or DA being sampled. Under existing § 70.201(b), sampling devices must operate only up to 8 hours. Under the 2003 plan verification proposal, sampling devices collecting MMU verification samples and quarterly samples would have to be operational only during the period spent in the MMU. Proposed § 70.201(e) would account for all the time that a miner works and is exposed to respirable coal dust.

Some commenters in response to the 2003 proposed rule stated that all sampling, whether for compliance or verification purposes, should be conducted full-shift and portal-to-portal in order to obtain an accurate measurement of the concentration of respirable dust to which a miner is exposed. These commenters believed that a full-shift would have to account for the entire time a miner is underground to get a miner's true exposure. One commenter explained that many miners ride mantrips onto the section, some for as long as an hour, during which time the miners are exposed to dust. The commenter further stated that the exposure obtained during a miner's transportation to the section should be accounted for.

The proposed change related to extended work shifts is consistent with the Dust Advisory Committee report. Although not unanimous, the Committee recommended that exposure limits should be adjusted for extended work shifts. In support of this recommendation, the Committee reviewed exposure data and stated that the data showed that work in excess of 8 hours per day is now common in the mining industry. The Committee further stated that the data were consistent with miners' reports to the Committee. In its discussion on extended shifts, the Committee addressed increased health risks to miners and stated that exposures longer than 8 hours per day result in greater respirable dust deposition, with a shorter period of dust clearance from the lungs prior to the next exposure.

As further support for the proposal, the Coal Mine Respirable Dust Task Group concluded that current regulations limiting the duration of sampling to 8 hours do not provide for adequate assessment of respirable dust exposure during nontraditional shifts of more than 8 hours. (U.S. Department of Labor, MSHA, 1992). Also, MSHA conducted a survey in August 2002 that found 48 percent of producing MMUs operated at least a 9-hour shift.

Working extended shifts increases exposure, resulting in increased health risks to miners, both in terms of incidence and severity. The proposal with respect to extended shifts is consistent with generally accepted industrial hygiene principles today, which take into consideration all of the time a worker is exposed to an airborne contaminant, even if it exceeds 8 hours a day.

Under the proposal, the sampling device must remain with the occupation or DA being sampled during the entire shift to ensure that respirable dust concentration levels are continuously being monitored. If a miner in an occupation being sampled changes from one occupation to another during the production shift, the sampling device must remain with the occupation designated for sampling. For example, if using a CPDM to sample a DO (continuous mining machine operator) on a continuous mining section and the duties of the machine operator are divided equally between Miner 1 and Miner 2, the dust sampler must be worn for half the shift by Miner 1 and the other half by Miner 2, while each is operating the continuous mining machine. Similarly, under the proposal, a dust sampler must remain at the DA during the entire shift. Once sampling results are available, mine operators and MSHA would analyze the data to determine if adjustments need to be made (*e.g.* re-designating DOs or modifying dust control parameters).

Proposed paragraph (e)(1) is new and would address work shifts longer than 12 hours. It would require that when using a CMPDSU and the work shift to be sampled is longer than 12 hours, the operator would have to switch-out the unit's sampling pump prior to the 13th hour of operation. MSHA notes that the manufacturer of the CMDPSU states in its instructional manual that the typical battery-pack service life varies from a minimum of 8 hours to a maximum of 11.5 hours. However, MSHA is aware that the testing parameters are more rigorous than the actual conditions in the mine. The pumps are tested in extreme levels of coal dust which cause large amounts of dust to accumulate on

the filter. This leads to high back pressure, requiring the pump to work harder, and resulting in a shorter battery life. With the use of proper dust controls, the pump will not have to work as hard, thereby prolonging the battery life. To address shifts greater than 12 hours, the Agency is proposing to require that the unit be switched-out prior to the 13th hour to prevent disruption in operation and to provide continued protection for miners.

Paragraph (e)(2) is new and would add a similar requirement to address work shifts longer than 12 hours for operators who use CPDMs. It would require that the operator switch-out the CPDM with a fully charged device prior to the 13th hour of operation, if the work shift to be sampled is longer than 12 hours. NIOSH's Report of Investigations, 9669, Laboratory and Field Performance of a Continuously Measuring Personal Respirable Dust Monitor suggests that 12 hours of battery power be provided to the CPDM. Consistent with NIOSH's report, the Agency is proposing to require that the CPDM be switched-out prior to the 13th hour to prevent disruption in operation and to provide continued protection for miners. The Agency requests comments on an appropriate time that operators should switch out the CMDPSU's sampling pump or the CPDM when working longer than 12 hours. Please be specific in your comments and include rationale for your suggestions.

Proposed paragraphs (f)(1) through (f)(4), are derived from the 2003 plan verification proposal and, if using a CMDPSU, would require: the mine operator to use one control filter for each shift of sampling; each control filter to have the same pre-weight date (noted on the dust data card) as the filters used for sampling; each control filter to remain plugged at all times; each control filter to be exposed to the same time, temperature, and handling conditions as the filter used for sampling, and that each control filter be kept together with the exposed samples after sampling.

Consistent with accepted industrial hygiene principles and practice, proposed paragraph (f) would require the operator to use control filters when sampling. A control filter is an unexposed filter of the same design as the filter used for sampling and is pre- and post-weighed on the same day as the filter used for sampling. MSHA first began using control filters in its enforcement program in May 1998 and continues this practice today. The Agency's intent is to improve measurement accuracy by eliminating the effect of differences in pre- and post-exposure laboratory conditions, or changes introduced during storage and handling of the filter cassettes. Under the proposed rule, MSHA would extend the program in effect since July 2007, which allows operators to use control filters in the optional quartz sampling program, to the entire sampling program. The control filter would be used for all operator sampling to adjust the resulting weight gain obtained on each exposed filter by subtracting any change in the weight of the control filter from the change in weight of each exposed filter. This is especially important since the filter cassettes to be used by operators would be pre-weighed by the manufacturer and post-weighed by MSHA. To ensure the precision and accuracy of the pre-weight of filters currently used by MSHA, and proposed to be used by operators, MSHA audits the daily production of filter cassettes. The program conforms to ANSI/ASQ Z1.4–2008, "Sampling Procedures and Tables for Inspection by Attributes", which defines the criteria currently used to monitor the quality of the operator bimonthly sampling program.

Since the control filter would be used to adjust the resulting weight gain obtained on each exposed filter cassette, the control filter must have the same pre-weight date as the filter cassette to be used for sampling on the same shift. The pre-weight date is noted on the dust data card. To prevent exposure to the mine environment, the plugs attached to the inlet and outlet side of the cassette must not be removed. Also, it is important that the control filter be exposed to the same time, temperature, and handling conditions as the ones that are used for sampling, *i.e.,* carry the control filter in a shirt or coverall pocket while underground. While the control filter can be carried by any miner assigned to the MMU being sampled, it would be preferable if that miner performed the job of the DO. Finally, the control filter cassette must be kept together with the exposed samples after sampling and should be treated in the same manner as the exposed filters prior to being transmitted to MSHA. Failure to follow these proposed instructions would be cause for voiding the sampling results.

Proposed paragraph (g) is new and would require the operator to make a record showing the length of each production shift for each MMU, to retain the records for at least six months and make them available for inspection by authorized representatives of the Secretary and the miners' representative or submitted to the District Manager when requested in writing. Under the proposed rule, mine operators would need to know the length of the production shift to determine the equivalent concentration of respirable dust in the mine atmosphere. MSHA would use these records to verify that operators are accurately recording the actual production shift lengths so that miners are not being overexposed.

Proposed paragraph (h), redesignated from paragraph (c), would be revised to require that, upon request from the District Manager, the operator would submit the date and time any respirable dust sampling would begin and submit that information to the District Manager at least 48 hours prior to scheduled sampling. MSHA has included the proposed 48-hour notification requirement in the proposal to provide the Agency the opportunity to observe and monitor operator sampling to ensure that both operating conditions and sampling requirements are met.

Proposed paragraph (i) is new and would require, for purposes of establishing a normal production shift as defined under proposed § 70.2, the operator to record the amount of material produced (run-of-mine, *i.e.,* coal and rock) by each MMU during each shift used to establish the average production for the most recent 30 production shifts or for all the production shifts if fewer than 30 shifts of production data are available. The operator would also be required to retain production records for at least six months and make the records available for inspection by authorized representatives of the Secretary and the miners' representative.

The Dust Advisory Committee recommended that MSHA should require the mine operator to maintain the appropriate records. MSHA currently relies on information provided by the operator to determine at what production level the mine ventilation plan should be evaluated. No production records are required for each MMU. Although operators must submit production data on a quarterly basis, the data are compiled for the entire mine. In addition, quarterly reports provide information on the amount of clean coal produced, which is much lower than the tonnage of total material produced, and is not useful for establishing what constitutes a "normal production shift" for each MMU for sampling purposes. Under the proposed rule, MSHA would use the record under proposed paragraph (i) to establish a normal production level to evaluate.

Proposed paragraph (j) is new and would require mine operators using CPDMs to provide training to all miners expected to wear one. This would

include miners who perform the duties of the DO or ODO, occupations determined by results of respirable dust samples to have the greatest respirable dust concentration. Mine operators may also choose to use the CPDM to address outby DA sampling.

Proposed paragraph (j) would require that a miner receive initial training prior to being required to wear a CPDM, and receive retraining every 12 months. Based on MSHA's experience, training would be most effective when provided close to the time when the miner is expected to wear the CPDM. Proposed paragraphs (j)(1) through (j)(5) would require that the miner be instructed on: The basic features of the CPDM and its capabilities; how to set-up the CPDM for compliance sampling; the various types of numerical displays on the CPDM readout and how to access that information; how to start and stop a short-term sample run during compliance sampling; and the importance of continuously monitoring dust concentrations and properly wearing the CPDM.

The CPDM is an important new technology that continuously measures miners' exposure to respirable coal mine dust, in real time. The proposed training requirements would assure that miners who must wear the CPDM understand not only how the device works, but also the data displayed on the CPDM, which continuously displays the concentration of respirable dust in their work environment. The miner can use the displayed information to inform a responsible mine official of excessive dust levels and any concerns of being overexposed to respirable dust. MSHA believes it is vital that miners be properly trained on the operation of CPDMs to assure the integrity and credibility of the sampling process. For the sampling program to be effective, miners must understand the proper use of the CPDM, and its operation and information displayed. Well informed miners are more likely to make the most of the capabilities of the new CPDM technology.

Some commenters on the 2009 CPDM RFI supported CPDM training that would be separate from part 48 training. Other commenters maintained that CPDM training should occur before initial usage and be included thereafter with part 48 refresher training. MSHA considered whether training on the operation and use of the CPDM could be adequately covered under part 48 training, considering the other subjects that part 48 is required to address. MSHA believes that it is impracticable to include the proposed comprehensive training on CPDMs within the prescribed time limits under part 48. Under the proposal, the time for CPDM training would be required to be in addition to that required under part 48. However, operators may choose to provide CPDM training separately from training under 40 CFR part 48, or may provide CPDM training on days that part 48 training is held as long as additional time is designated to assure that training on the CPDM required under the proposed rule is sufficient.

Some commenters suggested that MSHA provide hands-on training to small groups in 8-hour sessions to all underground miners. It is the responsibility of mine operators to provide required training. MSHA would encourage operators to develop training materials using available instructional materials (*e.g.,* videos) or operating manuals from the manufacturers.

Proposed paragraph (k) is new and would require mine operators to maintain a record of training at the mine site for two years following completion of training. MSHA believes it is important to retain these records to verify that the required training has been provided. Proposed paragraph (k) would also permit a mine operator to maintain the record at another location as long as the record could be immediately accessed electronically from the mine site. Finally, proposed paragraph (k) would require that upon request by an authorized representative of the Secretary, Secretary of HHS, or miners' representative, the mine operator must promptly provide access to any such training record.

E. Section 70.202 Certified Person; Sampling and § 70.203 Certified Person; Maintenance and Calibration

Proposed §§ 70.202 and 70.203 would revise requirements for certified persons who perform dust sampling and who maintain and calibrate sampling equipment. The proposal would add a new requirement for decertification of certified persons who do not properly perform their duties or who fail to pass the MSHA examination required to maintain certification.

Proposed §§ 70.202(b) and 70.203(b) would retain the existing requirement that candidates for certification pass an MSHA examination to demonstrate competency in respirable dust sampling procedures or in maintenance and calibration procedures, as appropriate. To ensure consistent administration of the certification process, however, the proposal would add a new requirement that candidates complete an MSHA course of instruction prior to certification. The existing requirement that candidates pass an MSHA examination would not be changed and the examination would be given at the end of the course. MSHA believes the proposed new requirement that candidates complete an MSHA course would permit instructors to personally engage and converse with candidates to ensure that they have a comprehensive understanding of sampling or maintenance and calibration procedures. MSHA also believes that the proposed course requirement would strengthen the overall certification process. The proposed requirement is consistent with the recommendation of the 1992 Coal Mine Respirable Dust Task Group.

Several commenters on the CPDM RFI recommended that the certification requirements for both sampling and maintenance and calibration procedures be revised to account for technological differences between CMDPSUs and CPDMs. Though not explicitly reflected in the language of this proposed section, the mandatory course of instruction and competency examination that a person would be required to pass prior to becoming certified for sampling with or maintaining and calibrating a CPDM would be tailored to apply to the device. MSHA recognizes that, due to the technological differences between the instruments, a person's competency to sample with or maintain and calibrate a CPDM can only be demonstrated by standards that are specific to the device. Thus, a person who is certified to sample with or maintain and calibrate a CMDPSU would not be certified to sample with or maintain and calibrate a CPDM until completing the CPDM course of instruction and passing the examination demonstrating proficiency in CPDM sampling or maintenance and calibration procedures.

Proposed § 70.202(b) would clarify the Agency's existing practice that only persons who are specifically certified in dust sampling procedures be permitted to collect respirable dust samples and handle approved sampling devices when being used in sampling. This requirement would ensure that only trained persons, whose familiarity with proper sampling procedures has been evaluated, are allowed to collect dust samples. Dust samples must be collected effectively, and in accordance with proper procedures, to assure quality and validity of the sample. Accuracy and quality of dust sample results can be significantly affected by the procedures used during the collection process. MSHA believes that only persons certified in dust sampling procedures should be allowed to perform this important responsibility.

Proposed § 70.203(b) would clarify the Agency's existing practice that only persons who are certified in maintenance and calibration procedures be permitted to perform maintenance and calibration work on approved sampling devices. The proposal is consistent with a comment received on the CPDM RFI that only persons specifically trained in maintenance procedures should be permitted to perform maintenance on CPDMs. However, like the existing policy, the proposal would allow persons who are only certified in sampling procedures to perform maintenance of an approved device's sampling head assembly. MSHA's experience is that maintenance of the head assembly does not require a person to open, handle, disassemble, or reassemble the sampling device's internal components. Additionally, maintenance of a sampling device's head assembly would not affect the electrical components or other intrinsic safety features that must be maintained for the device to retain its approval. For these reasons, MSHA believes that sampling device head assemblies can continue to be maintained by persons who only hold a sampling certification without compromising the device's ability to perform as approved under part 74.

Proposed §§ 70.202(c) and 70.203(c) are new and would require persons certified in dust sampling procedures or maintenance and calibration procedures to pass the MSHA examination demonstrating competency in sampling procedures or maintenance and calibration procedures every three years. MSHA believes that it is absolutely critical that persons who are designated to perform dust sampling and maintenance and calibration of dust sampling equipment maintain the necessary competency to do so. Therefore, the new proposed requirement would ensure that once persons are certified, they take the necessary action to maintain their knowledge, skills, and abilities. Existing standards do not require certified persons to be re-examined at regular intervals to maintain a valid certification. MSHA believes that certifying persons for life can result in diminished aptitude or proficiency in skills in an area where regular changes in technology, procedures, and types of equipment and materials can reasonably be expected to affect a person's competence to perform required tasks. During Section 202 spot inspections conducted in 2009, MSHA personnel routinely observed certified persons using improper procedures for dust collection and handling of sampling devices, and for maintaining and calibrating approved sampling devices. Further inquiry of these certified persons revealed that a number of them were no longer familiar with basic procedures. MSHA believes that it is fundamental that the components of the dust sampling program be performed effectively to assure the integrity of the program, and periodic re-examination to maintain certification would advance this end.

The Dust Advisory Committee recommended unanimously that MSHA require annual update training for persons certified for dust sampling. The recommendation explained that annual refresher training would keep persons up to date with sampling methods and regulations, and maintain their expertise. MSHA agrees with the Dust Advisory Committee to the extent that it recommended a requirement that certified persons should be required to periodically demonstrate or reaffirm their competency in sampling procedures. MSHA believes that the proposed requirement would ensure that certified persons do not allow their knowledge, skills and abilities to lapse.

Before deciding to propose the requirement that certified persons be recertified through examination every three years, MSHA considered alternatives, such as yearly and biennial recertification. However, the Agency believes that recertification every three years would ensure that certified persons remain proficient in proper procedures and reduce the administrative burden that would be placed on operators and certified persons by a more frequent recertification requirement. Requiring persons to be reexamined at regular intervals as a condition of maintaining a valid certification would ensure certified persons have a minimum threshold of proficiency at all times, as familiarity with proper procedures is integral to protecting the health of miners. It is important to note that the proposal would not require certified persons to take the MSHA course of instruction every three years as a condition of re-certification. While MSHA believes that it is essential for persons who are seeking initial certification to complete classroom training prior to taking the competency examination and becoming certified, MSHA does not believe that the same requirement is necessary for persons seeking recertification. Persons seeking recertification will have had the benefit of actual, hands-on experience in either sampling or maintenance and calibration procedures, and MSHA believes that their competency would be adequately evaluated by whether they pass or fail the examination. For this reason, proposed §§ 70.202(c) and 70.203(c) would not require persons seeking recertification to retake the course of instruction prior to taking the competency examination every three years. MSHA solicits comment on the proposal that reexamination occur at three-year intervals, including the rationale for any suggestions.

Proposed §§ 70.202(d) and 70.203(d) would provide that MSHA may revoke a person's certification for failing to pass the MSHA examination or failing to properly carry out required sampling procedures or maintenance and calibration procedures, as appropriate. The proposal is consistent with the Dust Advisory Committee's unanimous recommendation that MSHA consider a retraining and/or decertification requirement if certified persons do not perform their duties properly. MSHA believes that the Agency's ability to revoke certifications is critical to preserving the integrity, reliability, and accuracy of the dust program, as well as maintaining miners' confidence and support in the program. MSHA's current certification procedures and procedures regarding appeals of revocation are addressed in Program Policy Letter (PPL) No. P09–V–08 (August 12, 2009).

Proposed §§ 70.202 and 70.203 would delete existing §§ 70.202(c) and 70.203(c), which permit MSHA to temporarily certify a person to collect respirable dust samples or to maintain and calibrate approved sampling devices if the person has received specific instruction from an authorized representative of the Secretary. The existing temporary certification provisions would be deleted because the process has been unused. It has been MSHA's experience that people seek permanent certification instead of temporary certification. In fact, since the provision permitting temporary certification was implemented, nobody has been temporarily certified.

F. Section 70.204 Approved Sampling Devices; Maintenance and Calibration

The proposed rule would revise existing § 70.204 to conform to the Agency's existing policy for the CMDPSU.

Proposed § 70.204(a) would retain the existing requirement that sampling devices be maintained as approved under 30 CFR part 74 and calibrated in accordance with MSHA Informational Report IR 1240 (1996). Proposed § 70.204(a) would address the use of the CPDM and require that operators who use this device maintain it in

accordance with the manufacturer's recommendations. The CPDM is a new sampling device and this new proposed requirement would ensure that the CPDM would perform as designed.

To assure proper operation of the sampling device and integrity of the samples, proposed § 70.204(a) would also clarify that pump unit maintenance on approved samplers could only be done by persons certified in maintenance and calibration. Under the proposal, persons certified only in sampling could not perform maintenance or calibration work on pump units of approved sampling devices. MSHA's experience is that maintenance and calibration of the pump unit requires a person to open, handle, disassemble, or reassemble the sampling device's internal components. Additionally, maintenance of the pump unit could affect the electrical components or other intrinsic safety features that must be maintained for the device to retain its approval. MSHA believes that only persons trained and certified in maintenance and calibration procedures are competent and knowledgeable enough to properly perform pump unit maintenance. This requirement would assure that the device's ability to perform as approved under part 74 is not compromised.

Proposed § 70.204(b) would retain the existing § 70.204(b) requirement that sampling devices be calibrated at a flowrate of 2.0 liters of air per minute, or at a different flowrate prescribed by the Secretary or Secretary of HHS. The proposal revises the existing requirement to allow calibration of sampling devices at a different flowrate, if recommended by the manufacturer. Proposed § 70.204(b) also would retain the existing requirement that calibration be done before the samplers are put into service, but would delete the existing requirement that they must be calibrated at intervals 200 hours or less after being placed into service. Instead, the proposed rule would require sampling devices to be calibrated at time intervals prescribed by the Secretary or Secretary of HHS or recommended by the manufacturer. These changes would permit the introduction of new sampling technologies that may have different calibration requirements. It would also allow the Secretary to establish a different calibration requirement or calibration schedule when necessary to address problems associated with a particular sampling unit.

Existing § 70.204(c), which addresses calibration marks on the flowmeter, would be deleted because it no longer applies to approved sampling devices. The CMDPSU has a constant-flow design with a digital flow indicator and no longer uses a rotometer to indicate the flowrate. Also, the CPDM has no external flowrate indicator; instead, it is monitored by its own internal microprocessor.

Proposed § 70.204(c) is derived from existing § 70.204(d) and existing MSHA policy and would address testing and examination requirements when using a CMDPSU to conduct sampling. The proposed rule would require that the CMDPSU be examined and tested by a person certified in sampling or in maintenance and calibration within 3 hours before the start of the shift on which it will be used to assure that it is clean and in proper working condition. The existing standard requires that this examination and testing occur "immediately" before the sampling shift, and the proposal clarifies immediately to reflect MSHA's policy on its interpretation of "immediately." MSHA believes that clarifying a 3-hour timeframe provides operators transparency regarding their responsibilities for testing and examining sampling devices, flexibility, and assurance that the sampling devices work effectively during the next shift.

MSHA proposes to redesignate existing § 70.204(d)(1) through (d)(5) as § 70.204(c)(1) through (c)(5). In addition, the order of the paragraphs would be changed to reflect the order in which the examination and testing requirements must be performed. MSHA also proposes to add clarifying changes, which would incorporate existing MSHA policy, to describe more completely the procedures to be used for the required examinations and testing. The proposed changes include: (c)(1) Examining the interior of the connector barrel, vortex finder, cyclone body and grit pot; (c)(2) examining for scratch marks on the inner surface of the cyclone where the air flow is directed by the vortex finder into the cyclone body; (c)(3) examining the external hose connecting the pump unit to the sampling head assembly; (c)(4) examining the clamping and positioning of CMDPSU components to assure they are airtight; and (c)(5) assuring that a fully assembled and examined sampling head assembly is attached to the pump inlet with the pump unit running when the battery voltage is tested. MSHA experience indicates these proposed clarifications are necessary to assist operators in correctly performing the required examinations and testing to assure the accuracy of respirable dust samples and that devices operate as approved.

Proposed § 70.204(d) is new and would require that when CPDMS are used, a person certified in sampling or in maintenance and calibration follow the examination, testing, and set-up procedures contained in the approved CPDM Performance Plan (proposed § 70.206). This proposed requirement would ensure that CPDM procedures have been approved by the District Manager and that the device operates properly.

No changes are being proposed to § 70.204(e).

G. Section 70.205 Approved Sampling Devices; Operation; Air Flowrate

Proposed § 70.205, which addresses the operation and air flowrate of approved sampling devices, would revise the existing standard to include the use of CPDMs and to conform to Agency policy.

Proposed § 70.205(a) would retain the existing requirement that approved sampling devices be operated at the flowrate of 2.0 liters of air per minute or at a different flowrate prescribed by the Secretary or Secretary of HHS. It would revise the existing requirement to allow the operator to use a different flowrate recommended by the manufacturer. MSHA believes that this proposed revision would ensure that approved sampling devices would perform properly and as designed.

For clarity and simplification, MSHA is proposing non-substantive changes to existing § 70.205(b) and (c), which would be redesignated as paragraphs (b)(1) and (b)(2). Proposed § 70.205(b) would clarify that it would apply to operators when using a CMDPSU and would retain the requirement that a person certified in sampling must examine each approved sampling device at least twice during each sampling shift to assure it is placed in the proper location, operating properly, and at the proper flowrate.

Proposed paragraph (b)(1) would retain the existing requirement that the first examination must be made during the second hour after sampling devices are put into operation. It would also include the provision in existing § 70.205(d) to clarify that the examination is not required if the sampling device is being operated in a breast or chamber of an anthracite coal mine where the full box mining method is used.

Proposed § 70.205(b)(2) would retain the requirement in existing § 70.205(c) that the second examination be made during the last hour that sampling devices are operated and, if a proper flowrate was not maintained, the dust data card transmitted to MSHA must

include a notation to that effect. This proposal would include a new requirement that the certified person must place the notation regarding the improper flowrate on the back side of the dust data card. MSHA experience indicates that operators do not always put the notation on the card in a conspicuous location, which increases the likelihood that this important information can be overlooked. The proposed revision is consistent with existing Agency policy.

Proposed paragraph (b)(2) would also require that other events occurring during the collection of respirable dust samples that may affect the validity of the sample, such as dropping the sampling head assembly on the mine floor or into water, must be noted on the back-side of the dust data card. This proposed requirement would provide an opportunity for the operator to inform MSHA of conditions that may affect the sample's validity.

A commenter to the 2003 proposed rule stated that the requirement that certified persons make second hour and last hour examinations of sampling devices is obsolete and should be changed. MSHA believes that the proposed examinations of each CMDPSU are crucial to assure that the sampling device is operating properly, in the proper location, and at the proper flowrate. Also, any corrective actions taken as a result of the examinations would increase sampling accuracy.

A commenter to the 2009 CPDM RFI stated that the examinations required under existing § 70.205 would not be compatible with the CPDM because (1) Checks do not necessarily need to be done within 3 hours prior to sampling since the CPDM can be programmed ahead of the shift; (2) the flow rate exam during the second and last hour are unnecessary because the flow rate is not displayed on the CPDM; and (3) sensors record and log failures in the CPDM data files. The Agency agrees and proposes a new requirement for the CPDM. Proposed § 70.205(c) would require that the certified person examine the CPDM during the shift as specified in the approved CPDM Performance Plan to ensure that the CPDM is operating properly at the proper flowrate. The CPDM Performance Plan requirements are in proposed § 70.206, discussed below.

H. Section 70.206 CPDM Performance Plan

Proposed § 70.206 is new and would require operators who use CPDMs to develop and submit for approval a CPDM Performance Plan (Plan) prior to using the devices. The proposal specifies the information that would be required in the Plan and would establish Plan approval procedures.

Proposed § 70.206(a) would require that operators have an approved Plan to ensure that no miner working on an MMU is exposed to respirable dust concentrations in excess of the applicable standard. The proposal would require operators to develop a proposed Plan and submit it to the District Manager for approval. Under the proposal, operators could not implement a Plan until it has been approved by the District Manager.

The proposed requirement for a Plan is based on MSHA's longstanding regulatory history of requiring approved plans to address safety and health conditions that are unique to a mine. Plans are an essential component of an effective safety and health program and allow operators the needed flexibility to address unique conditions at their mine. The proposal would ensure that distinct mine procedures, mining cycles, conditions, and experiences can be addressed on a mine-by-mine basis. The CPDM Performance Plan would be a separate plan and not part of an operator's ventilation or methane and dust control plan.

Proposed § 70.206(a)(1), like the existing ventilation plan requirements, would require operators to notify the representative of miners at least 5 days prior to submitting a proposed CPDM Performance Plan, or any proposed revision to the Plan, to the District Manager for approval. At the time of this notification, the proposal would also require operators to provide a copy of the Plan to the representative of miners, if the miners' representative so requests. Consistent with the Mine Act and MSHA's existing standards, MSHA believes that input from miners on proposed Plan provisions is important, as they are generally in the best position to determine the effect of the provisions, if implemented. Additionally, the Agency believes that more effective Plans can be developed when mine operators and representatives of miners have meaningful involvement in the process. The proposal would allow the miners' representative sufficient time to become familiar with proposed Plan provisions and, when necessary, to discuss and resolve any issues with the operator. The proposed requirement that miners' representatives be provided with a copy of the proposed Plan upon request is consistent with existing ventilation plan requirements and would allow miners' representatives to meaningfully participate in the Plan approval process.

Proposed § 70.206(a)(2) would require the operator to make available for inspection by the miners' representative a copy of the proposed Plan and any proposed revisions which have been submitted for approval to the District Manager. This proposed provision would ensure that once the operator has submitted the proposed Plan or revision to the District Manager for approval, the miners' representative would also have the opportunity to inspect the documents. This proposal is consistent with requirements for approval of the ventilation plan and would facilitate miners' representatives' ongoing involvement in the Plan approval process.

Proposed § 70.206(a)(3) would require a copy of the proposed Plan and any proposed revision that has been submitted for approval to be posted on the mine bulletin board at the time of submittal. The proposed Plan or revision would be required to remain posted on the bulletin board until approved, withdrawn, or denied. The proposed posting requirement is consistent with existing ventilation plan requirements and would ensure that each miner is aware of the provisions in the proposed Plan, or any revisions to the Plan. It would provide these miners with the opportunity to review and consider the proposed Plan or revision, and offer comments, recommendations or concerns during the approval process. This proposed provision is consistent with the statutory and existing regulatory framework that provides for miners to have a meaningful role in matters affecting their safety and health, such as the CPDM Performance Plan.

Proposed § 70.206(a)(4) would address procedures for miners' representatives to provide comments on the Plan to the District Manager. It would permit the representative of miners, following receipt of a proposed Plan or proposed revision, to submit timely, written comments to the District Manager for consideration during the review process. The proposal would also require the District Manager to provide a copy of the representative of miners' comments to the operator upon the operator's request. Consistent with existing ventilation plan requirements, the proposal would require miners' representatives to submit their comments in a "timely" manner in order to be considered by the District Manager. Accordingly, while miners' representatives would be permitted a reasonable period within which to review the operator's submittal and forward their comments to the District Manager, the proposal would not allow

them an indefinite or unreasonable period within which to do so. Like the existing standards and consistent with the statutory framework, the proposal would provide miners' representatives a reasonable amount of time in which to review a proposed CPDM Plan or revision, and submit their comments to the District Manager to facilitate development of an appropriate Plan. Although the proposal does not define timely, under the proposal, MSHA would balance the need for timely review, evaluation and approval of a Plan, with all parties' need for meaningful participation in the approval process.

The proposed requirement that District Managers provide operators, upon request, with a copy of comments submitted by the miners' representative would ensure that operators are aware of miners' and their representatives' position with respect to a proposed Plan or revision. MSHA believes that the proposed procedures for approval of a Plan, including input by miners and their representatives and information to the mine operator, would provide a reasonable approach to information sharing between operators and representatives of miners.

Proposed § 70.206(b) would include the information that would be required in CPDM Performance Plans and the names or titles of the responsible mine officials who would be designated by the operator to perform the tasks required by this proposed provision. The proposal would ensure that each Plan contains sufficient information necessary for: the operator to have an effective Plan; MSHA to approve the Plan; and for MSHA to verify the responsible mine officials designated by the operators to properly implement the provisions of the Plan in this section. The proposed requirement that operators identify the mine official who would be responsible for each required task would permit the mine official to be designated by title or name, so long as MSHA and miners are able to readily discern who that official is. For example, if the operator designates the "safety supervisor" as the official responsible for electronically transmitting certified sampling data files to MSHA at the end of each week, the proposed Plan would be considered acceptable by MSHA if the operator employed only one individual with the title of "safety supervisor." Conversely, if the operator designates the "section foreman" as the person responsible for taking on-shift action to ensure that sampled occupations will remain in compliance at the end of the shift, but has more than one section foreman, the designation would not be acceptable. The operator would have to include the titles or names of the designated mine official responsible for performing the tasks required by each of the eight proposed provisions, as well as any other tasks, if required by the District Manager.

Proposed § 70.206(b)(1) would require the Plan to include the occupations designated by MSHA in each MMU that would be sampled using a CPDM, along with a 9-digit identification number in the following sequence: (i) The first four digits would identify the MMU being sampled; (ii) the next three digits would identify the sampled occupation; (iii) the eighth digit would identify the particular shift being sampled (*e.g.,* 1st, 2nd or 3rd); and (iv) the final digit would identify the particular work crew that the wearer of the sampling device is assigned to at mines employing multiple crews to work the same shift on different days during the same calendar week (*e.g.,* 1st crew, 2nd crew, etc.). The proposed unique 9-digit identifying number would ensure that sampling results are properly attributed to the occupation and crew from which they were taken. MSHA has included this requirement in the proposal because it is critical that the Agency be able to correlate each sample result to the occupation and crew from which it was obtained. This information would allow the Agency to determine whether the weekly permissible accumulated exposure has been met. The distinction between crews is essential where operators employ several crews, each of which works the same shift but on different days of the week. It is vital for MSHA, operators and miners to know exposures of the sampled designated occupations so that timely corrective action can be taken, as necessary.

Proposed § 70.206(b)(2) would require the Plan to include pre-operational examinations, testing and set-up procedures to verify the operational readiness of the CPDM before each sampling shift. These proposed tasks would have to be performed by a person certified in sampling procedures. This proposed provision is consistent with a comment received on the CPDM RFI that favored operators being held responsible for ensuring the operational readiness of their CPDMs. The proposal would require the operator to establish examination, testing, and set-up procedures that would assure that the device is ready to be used and will function properly during the shift. Pre-operational exams, testing and set-up procedures are critical to the proper use of the CPDM, as they would ensure that the approved device is working correctly and that results from the device are reliable. These procedures should be based upon the manufacturer's recommendations, as appropriate. Set-up procedures should include programming the CPDM with the shift length and the applicable dust standard for that MMU. Additionally, set-up procedures should include placing a filter in the device. The pre-operational examination should ensure that the CPDM is ready to be used for the shift. The designated mine official should also calculate the weekly permissible accumulated exposure. MSHA solicits comment on this proposed provision and requests that a detailed rationale accompany any comment or recommendation that is submitted.

Proposed § 70.206(b)(3) would require the Plan to include procedures that address downloading end-of-shift sampling information; and validation, certification and posting of reported results. The responsible mine official designated to perform these tasks would be required to be certified in sampling procedures. The proposal would require that the Plan specify how the operator would ensure that all of the recorded CPDM data would be downloaded at the end of each shift. Because the operator would be required to post specific end-of-shift information on the mine bulletin board, the downloaded data should include: the location within the mine from which the sample was taken; the respirable dust concentration; the occupation code, where applicable; the shift length; and any information related to a voided sample. With respect to the proposed requirements that the designated mine official validate and certify the reported results, the Plan should specify the means by which the official would determine that the reported results appear reasonable and accurate in light of considerations such as shift length, the location from which the sample was taken, the sampled occupation, etc. The proposal would require that the Plan include posting procedures and information describing how the official would ensure the posting of the reported results. MSHA solicits comment on this proposed Plan provision, and requests that a detailed rationale accompany any comment or recommendation that is submitted.

Proposed § 70.206(b)(4) would require the Plan to include procedures for weekly electronic transmittals of certified sampling data files to MSHA including the responsible mine official designated to perform the weekly electronic data transmittals. If operators choose to use other services, such as a contractor, to transmit weekly data to

MSHA, the Plan would have to include that information to ensure the integrity of data. Additionally, the Plan should specify how the operator would ensure that weekly data would be electronically transmitted to MSHA. MSHA solicits comment on this proposed Plan provision, and requests that a detailed rationale accompany any comment or recommendation that is submitted.

Proposed § 70.206(b)(5) would require the routine daily and other required scheduled maintenance procedures to be included in the Plan. With regard to the routine daily maintenance procedures, the Plan should include the steps the mine official would take to prepare the units for daily usage, which may include cleaning the CPDM's inlet tubing and cyclone in order to keep it free of dust and dirt (*e.g.,* by spraying with compressed air), changing the filters, and recharging the batteries. Proper daily maintenance of the CPDM, such as cleaning the inlet tubing and cyclone, ensures that the device is ready for the sampling shift and that it provides consistent operation. Routine daily maintenance procedures should be based on the manufacturer's recommendations. With regard to "other required scheduled maintenance," the Plan would include scheduled monthly and annual maintenance, as well as any other task that requires the CPDM case or unit connections to be broken. These tasks, which require exposing the internal components of or disassembling the unit, have the potential to compromise the intrinsic safety features of the CPDM. MSHA solicits comment on this proposed Plan provision, and requests that a detailed rationale accompany any comment or recommendation that is submitted.

One commenter to MSHA's CPDM RFI recommended that MSHA assume responsibility for all non-routine maintenance of operators' CPDM units, while operators assume responsibility for routine maintenance of the units. Proposed § 70.206(b)(5), however, would require operators to include all CPDM maintenance procedures, whether routine or other than routine. The Agency believes that operators are in the best position to maintain equipment, tools and instruments that they use to comply with the Mine Act and related standards. Under the existing dust standards, operators are responsible for ensuring that their CMDPSUs are properly maintained, and MSHA believes continued application of this practice is sound.

Proposed § 70.206(b)(6) would require the Plan to specify procedures or methods for verifying the calibration of each CPDM. The Plan should specify how frequently the CPDM would be calibrated in order to ensure the validity of each device's measurements and the continued reliability of the information reported by the instrument. In determining calibration frequency, the operator should follow the manufacturer's recommendations; however, the District Manager may require more frequent calibrations should circumstances warrant, such as, prolonged exposure to extreme temperatures, repeated sampling results that are unable to be validated, intense vibration or shock, or improper handling by someone not certified in maintenance and calibration procedures. MSHA solicits comment on this proposed provision, and requests that a detailed rationale accompany any comment or recommendation that is submitted.

One commenter to the CPDM RFI recommended that MSHA assume responsibility for calibrating and maintaining each mine operator's CPDM units. The proposal does not reflect this suggestion. As discussed previously, MSHA believes that each operator is in the best position to ensure that its tools, equipment, dust sampling devices, etc., are in proper working order. Under MSHA's existing standards, operators are responsible for ensuring regular calibration of their CMDPSUs, and maintenance of the units as necessary. MSHA believes that operators should have the same responsibility with respect to CPDM calibration and maintenance.

Proposed § 70.206(b)(7) would require the Plan to specify the frequency with which the dust concentration is to be monitored by the designated mine official during the shift. The Plan should specify reasonable monitoring intervals based on considerations such as the occupation being monitored, geologic conditions, the location in the mine from which the sample is being taken, production levels, past exposure levels, and similarity to current conditions, and mine experience. MSHA solicits comment on this proposed provision, and requests that a detailed rationale accompany any comment or recommendation that is submitted.

Proposed § 70.206(b)(8) would require the Plan to include the types of actions permitted to be taken by the responsible mine official during the shift to ensure that the environment of the occupation being sampled remains in compliance at the end of the shift. Specific actions to be taken would depend upon the particular circumstances in the mine. For example, the Plan could contain actions such as checking the approved dust plan parameters, determining whether the water sprays are functioning properly and, if so, whether the water pressure is appropriate; examining the number of scrubber sprays; examining the amount of air delivered to the section; or inspecting the length of bits. Permitted actions should ensure that environmental and engineering controls that have already been installed are functioning so as to provide optimum protection. MSHA solicits comment on this proposed provision, and requests that a detailed rationale accompany any comment or recommendation that is submitted.

Proposed § 70.206(b)(9) would require the Plan to include any other information required by the District Manager. Consistent with MSHA's other existing standards that require plans, the proposal would provide District Managers the authority to require added plan content in order to accommodate special circumstances. For example, a District Manager may require added Plan content to address repeated overexposures to respirable dust, CPDM units that are not properly cleaned under an operator's existing Plan procedures, or CPDMs that have repeatedly reported errors. MSHA believes that plans must be tailored to fit each mine's needs, and the flexibility provided in this proposed provision would ensure that variations between mines are accounted for in a mine's approved Plan. MSHA solicits comment on this proposed provision, and requests that a detailed rationale accompany any comment or recommendation that is submitted.

Proposed § 70.206(c)(1) would require the approved CPDM Performance Plan and any revisions to be provided upon request to the representative of miners by the operator following notification of approval. The proposal would ensure that miners' representatives are aware and knowledgeable of any approved Plan or Plan revision. MSHA believes that providing the representative of miners with a copy of the approved Plan and revisions facilitates the information exchange that the Agency believes furthers the health protections of miners. This proposed provision is consistent with other MSHA plan requirements.

Proposed § 70.206(c)(2) would require the approved Plan and any revisions to be made available for inspection by the representative of miners. The proposal would ensure that the representative of miners could examine or look over the approved Plan or revisions so that miners and their representatives fully understand the provisions in the Plan and how the Plan affects them. The

proposed provision is consistent with other MSHA plan requirements.

Proposed § 70.206(c)(3) would require the approved Plan and any revisions to be posted on the mine bulletin board within 1 working day following notification of approval, and to remain posted for the period that the Plan is in effect. The proposal would help to assure that miners and their representatives are aware of the provisions of the approved Plan in a timely manner. The proposed provision is consistent with other MSHA plan requirements.

Proposed § 70.206(d) would allow the District Manager to require an operator to revise an approved Plan if the District Manager determines that the plan is inadequate to protect miners from exposures to excessive concentrations of respirable coal mine dust. MSHA believes that District Managers must have the authority to require Plan revisions when it is determined that the minimum Plan provisions would not reliably and consistently protect miners from excessive dust. All mines, whether surface or underground, present a dynamic work environment. MSHA's experience has demonstrated that such working environments often require Plan revisions to account for conditions or circumstances that might not have been present at the time the Plan was approved. Similarly, even absent changing mine conditions, implementation of an approved plan might reveal that variables assumed during the Plan approval process, perform differently during actual mining activities, resulting in inadequate protection of miners. For this reason, MSHA believes it is critical that District Managers have the ability to require Plan revisions. It is the Agency's intent that, prior to requiring an operator to revise an approved Plan, the District Manager would consider relevant inspection information, including any dust citations that have been issued and corrective action taken to lower respirable dust concentrations. However, under the proposal, District Managers would not be required to wait until a miner has been exposed to excessive dust prior to determining that a Plan is inadequate and a revision warranted, provided there is a reasonable basis to make such determination. For example, a District Manager may require plan revisions to address CPDM units that are not properly cleaned under an operator's existing Plan procedures, or CPDMs that have repeatedly reported errors. Failure to include the required revisions into a Plan would provide just cause for MSHA to revoke the existing Plan. MSHA believes that such instances of refusal to incorporate required revisions into a Plan will rarely, if ever, occur. Consistent with MSHA's other standards that require approved mine plans, operating without an approved Plan would be a violation of MSHA standards. MSHA solicits comment on this proposed provision, and requests that a detailed rationale accompany any comment or recommendation that is submitted.

I. Section 70.207 Sampling of Mechanized Mining Units; Requirements When Using a CMDPSU

Proposed § 70.207 would revise the existing bimonthly sampling requirements when using CMDPSUs on MMUs. The proposal would change the title to distinguish this section from proposed § 70.208 which would apply to operators who use CPDMs.

Proposed § 70.207(a) would replace the existing term "respirable dust samples" with the new term "representative samples." The term representative samples is discussed elsewhere in this preamble in proposed § 70.2 related to definitions. The proposed change to include representative samples would offer greater protection for miners since it would assure that samples taken by the operator would reflect typical dust concentrations and conditions at the mine during normal mining activity.

As in existing § 70.207(a), the proposed rule would require that DOs be sampled on "consecutive normal production shifts or normal production shifts each of which is worked on consecutive days." Proposed § 70.2 would, however, revise the definition for "normal production shift," discussed elsewhere in the preamble. Under the proposal, bimonthly sampling periods would remain the same as in the existing standard.

Proposed § 70.207(b), redesignated from existing § 70.207(e), would substantively remain unchanged. Proposed (b)(1) through (b)(10), which identify the DOs that will require sampling and the location of sampling, would remain the same.

Proposed § 70.207(c), (c)(1), and (c)(2) would apply when the respirable dust standard has been changed due to the presence of quartz under proposed § 70.101.

Proposed § 70.207(c) is new and would require that when the applicable dust standard is changed in accordance with proposed § 70.101 (Respirable dust standard when quartz is present), the new applicable standard would be effective on the first production shift following the operator's receipt of notification of the change from MSHA. The proposal would protect miners by ensuring prompt implementation of the reduced standard when high concentrations of quartz are present. For example, during the day shift on Monday, the operator receives notification from MSHA that the respirable dust standard for the DO, the cutting machine operator, will be reduced in accordance with proposed § 70.101 due to a high quartz measurement. Proposed paragraph (c) would require the reduced standard to become effective on the next production shift, which could be the evening shift on Monday or the midnight shift on Tuesday morning or the day shift on Tuesday. The proposed provision is consistent with Agency policy and would provide increased health protection for miners.

Proposed § 70.207(c)(1) is derived from existing § 70.207(b). Under the proposal, if all samples from the most recent bimonthly sampling period do not exceed the new applicable standard, the operator would begin sampling in the affected MMU on the first production shift during the next bimonthly period following notification from MSHA of the change in the applicable standard. Proposed paragraph (c)(1) is consistent with existing § 70.207(b) and Agency policy.

Proposed § 70.207(c)(2) is new and would require that if any sample from the most recent bimonthly sampling period exceeds the new applicable standard (reduced due to the presence of quartz), the operator must make necessary adjustments to the dust control parameters in the mine ventilation plan within three days, and then collect samples from the affected MMU on consecutive normal production shifts until five valid representative samples are collected. The samples collected would then be treated as normal bimonthly samples. MSHA believes that operators should take prompt actions to reduce the dust levels when the new applicable standard is exceeded and that three days is a reasonable amount of time to do so. The additional samples would allow operators to make a timely determination whether the dust controls are working effectively. Proposed § 70.207(c)(2) would assure that miners who need to be on a reduced standard are adequately protected.

Proposed § 70.207(d) would revise existing § 70.207(d) by deleting the existing provision requiring that any sample greater than 2.5 mg/m^3 be used when normal production is not achieved. In its place, the proposal would require that, if any sample

exceeds the applicable standard by 0.1 mg/m^3, regardless of production, the sample would be used to determine the average concentration for that MMU. Voiding samples that indicate miners were exposed to a concentration of respirable dust in excess of the applicable standard does not provide miners the intended health protection. For example, an MMU is on a reduced standard of 0.5 mg/m^3 due to the presence of quartz. A sample taken on the MMU when a normal production shift was not achieved shows the respirable dust concentration is 2.3 mg/m^3. Under the existing standard, that sample would not be used to determine the average concentration for the MMU. However, MSHA believes that any sample that exceeds the applicable standard while production is less than normal should be used to determine the respirable dust concentration of the MMU since operating at a higher production would likely increase miners' respirable dust exposure.

Proposed § 70.207(e) is new and would require that if an operator uses a CMDPSU, no valid single-shift sample equivalent concentration measurement shall meet or exceed the Excessive Concentration Value (ECV) that corresponds to the applicable standard. The ECVs are listed in Table 70–1. A full discussion of the use of single, full-shift measurements is addressed elsewhere in this preamble under proposed § 72.800. The ECVs were calculated to ensure that, if an ECV is met or exceeded, MSHA can determine noncompliance with the applicable dust standard with at least 95-percent confidence.

The NIOSH Criteria Document recommended that MSHA should make no upward adjustment in exposure limits to account for measurement uncertainty for single, full-shift samples used to determine noncompliance. The Dust Advisory Committee made the same recommendation; however, it was not unanimous. One commenter on the CPDM RFI stated that MSHA should issue a citation when any full-shift sample exceeds the exposure limit by > 0.1 mg/m^3. The commenter also stated that the Agency should not apply the 95% confidence level adjustment since it gives benefit of the doubt to the operator at the expense of miners' health. In developing the proposal, MSHA considered an alternative that would have established noncompliance whenever any single-shift measurement exceeded the applicable dust standard by any amount. However, the Secretary must show, to a certain level of confidence, that there has been an overexposure before issuing a citation. The proposed rule is consistent with generally accepted industrial hygiene principles for health standards that include an error factor in determining noncompliance to account for measurement uncertainty. The proposal, however, would require that the operator take corrective action when the standard is exceeded by any amount. In this situation, the proposed rule would require that the operator: (1) Make respiratory equipment available to affected miners; (2) take corrective action to lower the dust level so that it does not reach the ECV level; and (3) record the corrective actions. This proposed requirement is generally consistent with NIOSH's recommendation and commenters' suggestion that the Agency make no upward adjustment to the standard, in that it would require the operator to take actions or receive a citation for not doing so.

Each proposed ECV was calculated to ensure that citations would be issued only when a single sample measurement demonstrates, with at least 95-percent confidence, that the applicable dust standard has been exceeded. MSHA believes that the proposed ECVs provide a sufficient degree of confidence in establishing noncompliance and basing noncompliance determinations on the proposed ECVs would provide miners increased health protection. A more detailed discussion on the derivation of the ECV values is included in Appendix A of the preamble.

The proposed rule would redesignate existing § 70.207(c) as § 70.207(f). Proposed § 70.207(f) would continue to require that upon issuance of a citation for a violation of the applicable standard involving a DO on an MMU, bimonthly sampling, and requirements when the respirable dust standard is changed due to quartz, would not apply to that MMU until the violation is abated. The proposal would replace (1) "§ 70.100(a) (Respirable dust standards) or § 70.101 (Respirable dust standard when quartz is present)" with "the applicable standard" to be consistent with other proposed part 70, 71, and 90 provisions; and (2) "that unit" with "that MMU" for clarification. The proposal would also make two nonsubstantive, conforming changes to replace references to paragraphs that have been redesignated. It would replace "(b)" with "(c)(2)," and "§ 70.201(d)" with "paragraph (g)."

The proposed rule would revise and redesignate existing § 70.201(d) as proposed § 70.207(g). It would require the operator to take actions, listed in paragraphs (g)(1) through (g)(3), during the time for abatement fixed in a citation for violation of the applicable standard. Proposed (g)(1) would require the operator to make approved respirators available to affected miners in accordance with proposed § 72.700. Proposed (g)(2) would require the operator to submit to the District Manager for approval proposed corrective actions to lower the concentration of respirable dust to within the applicable standard. Proposed (g)(3) would require that, upon approval by the District Manager, the operator implement the proposed corrective actions and then sample the affected occupation in the MMU on each normal production shift until five valid representative samples are taken. Proposed paragraph (g)(1) is consistent with existing § 70.300. Proposed paragraphs (g)(2) and (g)(3) are derived from existing § 70.201 and are consistent with generally accepted occupational industrial hygiene principles. MSHA believes that if a citation is issued for a violation of the applicable standard, the operator must take action to protect miners, including making respiratory protection available, evaluating dust control measures, and implementing new measures, as necessary, to reduce miners' risks of dust exposure. Proposed paragraph (g) would assure that effective proposed corrective actions are reviewed by the District Manager and implemented by the operator in a timely manner.

Proposed § 70.207(h) is new and would establish that a citation for violation of the applicable standard will be terminated by MSHA when: (1) The equivalent concentration of each of the five valid operator abatement samples is at or below the applicable standard; (2) the operator submits revised dust control parameters as part of the mine ventilation plan applicable to the MMU; and (3) the District Manager approves the revised dust control parameters. The proposal also requires that the revised dust control parameters must reflect the control measures used to abate the violation. MSHA believes that when there is a violation of the applicable standard, the proposed provision would assure that the revised dust control parameters are appropriate and demonstrate that they effectively reduce concentrations of respirable dust on the MMU.

Proposed § 70.207(i) is new and would require that when the equivalent concentration of one or more valid samples collected by the operator under this section exceeds the applicable standard but is less than the ECV in Table 70–1, the operator must: (1) Make approved respirators available to affected miners in accordance with proposed § 72.700; (2) take corrective

action to lower the respirable dust concentration to or below the applicable standard; and (3) record the corrective actions taken in the same manner as the records for hazardous conditions required by existing § 75.363. MSHA believes these proposed requirements are necessary to prevent miners' overexposure to respirable dust and would provide improved protection for miners. Proposed paragraph (i)(1) is consistent with existing § 70.300. MSHA believes that operators must take action to lower respirable dust concentrations to or below the applicable standard as would be required by proposed paragraph (i)(2) to assure that concentrations do not reach ECV levels, or a state of noncompliance. MSHA believes that the record required to be made under proposed (i)(3) would allow the Agency and mine operators to review the corrective actions taken and assist in determining whether the dust control parameters in the approved ventilation plan are adequate.

J. Section 70.208 Sampling of Mechanized Mining Units; Requirements When Using a CPDM

Proposed § 70.208 is new and would provide requirements on operator sampling of mechanized mining units when using a CPDM. It addresses: Occupations that must be sampled; frequency of sampling; actions to be taken when any end-of-shift concentration exceeds the applicable standard; actions to be taken when overexposures occur; and interim use of supplementary controls when all feasible engineering or environmental controls have been used.

Proposed § 70.208(a)(1) would require mine operators who use CPDMs to sample the DO in each MMU during each production shift, seven days per week (Sunday through Saturday), 52 weeks per year. The proposal would maintain MSHA's longstanding practice to require operators to sample the DO on each MMU because the DO is the occupation having the highest risk of dust exposure based on past MSHA sampling. The Agency considered, but rejected, retaining the operator's existing bimonthly sampling program, because MSHA believes that sampling DOs on every production shift, 7 days per week, 52 weeks per year is the most effective method of sampling to reduce miners' exposure to respirable coal mine dust. Both operators and miners would continually be aware of the dust conditions in the working environment and the effectiveness of dust controls. The proposal is consistent with comments on MSHA's RFI on CPDMs. Commenters supported CPDM sampling on DOs during all scheduled production shifts during the week. One commenter stated that the real-time sampling aspects of the CPDM provide the opportunity for more frequent sampling than is currently done.

Proposed paragraph (a)(2) would require mine operators using CPDMs to sample ODOs specified in paragraphs (b)(1) through (b)(10) of this section in each MMU during each production shift for 14 consecutive days during each quarterly period. The proposal would establish the quarterly periods as: (1) January 1–March 31; (2) April 1–June 30; (3) July 1–September 30; and (4) October 1–December 31. ODOs to be sampled would be identified by the MSHA District Manager (DM), specified in the mine ventilation plan, and addressed in the CPDM Performance Plan. ODOs identified by the DM would be based on MSHA's historical sampling data on the MMU; sampling of ODOs, such as shuttle car operators on MMUs using blowing face ventilation, would be required because MSHA's data show that sampling only the DOs does not always adequately protect other miners in the MMU. In addition, sampling on each production shift for 14 consecutive days during the specified quarter would provide samples that are representative of typical normal mining activities during the production shifts. MSHA believes that under normal mining conditions, the MMU should be able to complete multiple mining cycles in 14 days. Sampling during the 14-day period would provide results of respirable dust concentrations in the ODO's work environment and allow MSHA to evaluate the effectiveness of the dust controls being used.

The Agency solicits comment on which occupations should be sampled and the frequency that sampling should occur. Please be specific in your comments and include a detailed rationale.

Some commenters on the CPDM RFI stated that MSHA should be responsible for the purchase of all CPDMs and all sampling for purposes of determining compliance with respirable dust standards. The Dust Advisory Committee recommended that MSHA should take full responsibility for compliance sampling at the number and frequency levels required of both operators and MSHA to ensure reliability of the program. The Committee also stated that MSHA should explore possible means to secure adequate funding for this effort without adversely impacting the remainder of the Agency's resources and responsibilities. To achieve this end, the Committee recommended that resource constraints should be overcome by mine operator funding for the incremental compliance sampling, including implementation of an operator fee program. The proposed rule does not include these suggestions and recommendations. Under existing standards and consistent with the Mine Act, mine operators are responsible for providing safe and healthful mines. Toward that end, they are responsible for ensuring that hazards from respirable coal mine dust are minimized or eliminated from the miners' work environment. Operators are responsible for compliance sampling, including purchase of approved sampling devices. MSHA believes that this is a reasonable statutory requirement and sound regulatory principle that must be maintained. Consistent with the existing operator sampling program, MSHA believes that operators have primary responsibility and are in the best position to provide miners with safe and healthy working conditions. Part of that responsibility includes sampling the working environment to assure that miners do not suffer material impairment of health or functional capacity from exposure to respirable dust.

Proposed § 70.208(b) would require that the CPDM must be worn by the miner assigned to perform the duties of the DO or ODO specified in paragraphs (b)(1) through (b)(10) for each type of MMU or specified by the DM for each type of MMU. The proposal would ensure accurate sampling by requiring the CPDM to remain on the miner performing the duties of the DO or ODO. If that miner's duties change during the shift, the CPDM must remain with the miner performing the duties of the DO or the ODO.

Proposed paragraphs (b)(1) through (b)(10) would identify the DOs that would be sampled under paragraph (a)(1) and the ODOs specified by the DM that would be sampled under (a)(2) for each specified MMU.

Paragraph (b)(1) would provide that on a conventional section using a cutting machine, the DO on the MMU would be the cutting machine operator.

Paragraph (b)(2) would provide that on a conventional section shooting off the solid, the DO on the MMU would be the loading machine operator.

Paragraph (b)(3) would provide that on a continuous mining section other than auger-type, the DO on the MMU would be the continuous mining machine operator or mobile bridge operator when using continuous haulage. The ODOs for this type of MMU would be the roof bolter operator who works nearest the working face on

the return air side of the continuous mining machine and the shuttle car operators on MMUs using blowing face ventilation. The DO would be sampled under paragraph (a)(1) and the ODOs would be sampled under paragraph (a)(2).

Paragraph (b)(4) would provide that on a continuous mining section using auger-type machines, the DO on the MMU would be the jacksetter working nearest the working face on the return air side of the continuous mining machine.

Paragraph (b)(5) would provide that on a scoop section using a cutting machine, the DO on the MMU would be the cutting machine operator.

Paragraph (b)(6) would provide that on a scoop section, shooting off the solid, the DO on the MMU would be the coal drill operator.

Paragraph (b)(7) would provide that on a longwall section, the DO on the MMU would be the longwall operator working on the tailgate side of the longwall mining machine sampled under paragraph (a)(1). The ODOs of the jack setters working nearest to the return side of the longwall working face, and the mechanics working on the longwall working face would be sampled under paragraph (a)(2).

Paragraph (b)(8) would provide that on a loading section with a cutting machine, the DO on the MMU would be the cutting machine operator.

Paragraph (b)(9) would provide that on a hand loading section shooting off the solid, the DO on the MMU would be the hand loader exposed to the greatest dust concentration.

Paragraph (b)(10) would provide that on an anthracite mine section, the DO on the MMU would be the hand loader exposed to the greatest dust concentration.

The Agency requests comments on the proposed locations for the use of CPDMs. Please be specific in your comments and include rationale for suggested alternatives.

Proposed § 70.208(c) is new and would require that when the respirable dust standard is changed in accordance with § 70.101 (Respirable dust standard when quartz is present), the new applicable standard would be effective on the first production shift following the operator's receipt of notification of such change from MSHA. The proposed provision is consistent with Agency policy and identical to proposed § 70.207(c). The rationale for proposed § 70.208(c) is the same as that for proposed § 70.207(c), discussed elsewhere in the preamble.

Proposed § 70.208(d) would require that no valid end-of-shift equivalent concentration meet or exceed the ECV that corresponds to the applicable standard. The ECVs are listed in Table 70–2. As discussed elsewhere in the preamble related to proposed § 70.207(e), each ECV is calculated to ensure that citations are issued only when a single sample measurement demonstrates, with at least 95-percent confidence, that the applicable dust standard has been exceeded. The rationale for proposed § 70.208(d) is the same as that for proposed § 70.207(e), which is discussed elsewhere in the preamble.

Proposed § 70.208(e) would require that no weekly accumulated exposure (WAE) shall exceed the weekly permissible accumulated exposure (WPAE). The proposed terms "weekly accumulated exposure" and "weekly permissible accumulated exposure" are new and discussed elsewhere in the preamble under the § 70.2 definitions. For example, suppose a CPDM reported an equivalent concentration of 1.46 mg/m^3 for a miner who worked nine hours on Monday in the DO. Under the proposed definition of WAE, this quantity would be multiplied by 8 hours, yielding an accumulated exposure on Monday of 1.46 mg/m^3 $\times$ 8 hours or 11.68 mg-hr/m^3. If the particular miner worked the rest of the week, including Saturday, the exposure accumulated during each of the other five shifts would be determined in the same manner. If the daily exposures accumulated by the DO for the week were recorded as follows: Monday—11.68 mg-hr/m^3; Tuesday—12.51 mg-hr/m^3; Wednesday—10.75 mg-hr/m^3; Thursday—9.68 mg-hr/m^3; Friday—12.00 mg-hr/m^3; Saturday—10.75 mg-hr/m^3, adding together the daily accumulated exposures yields a WAE of 67.37 mg-hr/m^3.

To continue, if the applicable standard in the MMU is 1.5 mg/m^3, this quantity would be multiplied by 40 hours, yielding a WPAE of 60 mg-hr/m^3 for the DO. Since the WAE for the DO is 67.37 mg-hr/m^3, it would exceed the WPAE of 60 mg-hr/m^3.

Proposed paragraph (e) would assure that miner's respirable dust exposure for the work week would be limited to a calculated weekly permissible accumulated exposure for an equivalent 40-hour work week. This proposed paragraph is consistent with the NIOSH Criteria Document which recommended that respirable coal mine dust be limited to 1 mg/m^3 as a TWA concentration for up to 10 hr/day during a 40-hour work week.

Proposed § 70.208(f)(1) through (f)(5) would require the operator to take actions when any valid end-of-shift equivalent concentration meets or exceeds the ECV that corresponds to the applicable standard in Table 70–2, or a weekly accumulated exposure (WAE) exceeds the weekly permissible accumulated exposure (WPAE). The action would include making respirators available to affected miners, implementing corrective actions, submitting corrective measures to the DM for approval, recording the reported excessive dust conditions, and reviewing the adequacy of the approved CPDM Performance Plan. The proposal would ensure that operators take prompt actions to protect miners, evaluate their dust control measures, and implement new measures, as necessary, to reduce miners' excessive respirable dust exposure.

Paragraph (f)(1) would require the operator to make approved respirators available to the affected miners in accordance with proposed § 72.700. The proposal is consistent with existing § 70.300 which requires the operator to make respiratory equipment available to all persons exposed to excessive concentrations of respirable dust.

Paragraph (f)(2) would require the operator to implement corrective actions to assure compliance with the applicable standard on the next and subsequent production shifts. Corrective actions would include, for example, engineering or environmental controls that control the level of respirable dust by (1) reducing dust generation at the source with the dust controls on the machine; (2) suppressing dust with water sprays, wetting agents, foams or water infusion; (3) using ventilation to dilute dust; (4) capturing dust with machine-mounted dust collectors; or (5) diverting dust being generated by the mining process with shearer clearer or passive barriers. MSHA believes that the proposal would protect miners' health because the operator would be required to review the dust control parameters, determine what factors may have contributed to the overexposures, and immediately take corrective actions starting on the next production shift. Commenters on the RFI on CPDMs supported taking corrective actions to correct overexposures when operators are using a CPDM.

Paragraph (f)(3) would require the operator to submit the corrective actions implemented to lower the concentration of respirable dust to within the applicable standard as a proposed change to the approved ventilation plan to the District Manager for approval within 3 days of determining that the applicable standard was exceeded. The District Manager would address the operator's submission through the

approval process associated with the mine ventilation plan under existing § 75.370. The District Manager's review would assure that control measures in the plan would maintain respirable dust concentrations at or below the applicable standard so that concentrations would not approach the citable ECV levels. It would also assure improved protection for miners.

Paragraph (f)(4) would require the operator to review the adequacy of the approved CPDM Performance Plan. If any CPDM Performance Plan revisions are needed, it would require the operator to submit proposed revisions to the District Manager for approval within 7 calendar days following posting of the applicable end-of-shift equivalent concentration or the weekly accumulated exposure on the mine bulletin board. MSHA believes that if an end-of-shift respirable dust concentration meets or exceeds an applicable ECV in Table 70–2, or a weekly accumulated exposure exceeds the weekly permissible accumulated exposure, the operator should be required to review the CPDM Performance Plan to determine whether revisions are necessary to prevent miners from being overexposed in the future. In addition, MSHA believes a 7-calendar day period is a reasonable amount of time for the operator to review and submit CPDM plan revisions for approval.

Paragraph (f)(5) would require the operator to record the reported excessive dust condition as part of and in the same manner as the records for hazardous conditions required by existing § 75.363. The proposal would require the record to include the following information: (i) Date of sampling; (ii) length of the sampled shift; (iii) location within the mine and the occupation where the sample was collected; (iv) the end-of-shift equivalent concentration, or weekly accumulated exposure and weekly permissible accumulated exposure; and (v) corrective action taken to reduce the concentration of respirable coal mine dust to or below the applicable standard. The record would provide necessary and useful information for operators, miners, and MSHA to be able to evaluate dust exposures, controls, and conditions in order to determine when and where corrective actions are necessary, and whether such conditions are recurring. In addition, this information would be critical to MSHA when requiring necessary changes to the operator's approved ventilation plan to ensure that suitable controls are in place to protect miners on each shift. Some commenters on the RFI on CPDMs supported recording of sampling results and corrective actions taken.

Proposed § 70.208(g) would require the operator to take actions, listed in paragraphs (g)(1) through (g)(4), before production begins on the next shift when a valid end-of-shift equivalent concentration exceeds the applicable standard but is less than the ECV that corresponds to the applicable standard in Table 70–2. Proposed § 70.208(g)(1) and (g)(2) are identical to proposed § 70.208(f)(1) and (f)(2) and would require the operator to make respirators available to affected miners and implement corrective actions.

Proposed § 70.208(g)(3), like proposed § 70.208(f)(5), would require the operator to record the reported excessive dust condition as part of and in the same manner as the records for hazardous conditions required by existing § 75.363. Proposed paragraphs (g)(3)(i) through (g)(3)(iii), and (g)(3)(v), which specify information to include in the record, are identical to proposed paragraphs (f)(5)(i) through (f)(5)(iii), and (f)(5)(v). Proposed paragraph (g)(3)(iv) requires the record to include end-of-shift concentrations because paragraph (g) addresses only end-of-shift concentration measurements.

Proposed paragraph (g)(4), like proposed paragraph (f)(4), would require the operator to review the adequacy of the approved CPDM Performance Plan. It would also require the operator to submit to the District Manager for approval any plan revisions to their CPDM Performance Plan within 7 calendar days following posting of the end-of-shift equivalent concentration on the mine bulletin board. The rationale for this proposed provision is the same as for proposed paragraph (f)(4).

Proposed paragraph (h) would provide that for the 24-month period following the effective date of the final rule, if an operator is unable to maintain compliance with the applicable standard for an MMU and the operator determines that all feasible engineering or environmental controls are being used on the MMU, the operator may request through the District Manager that the Administrator for Coal Mine Safety and Health approve, for a period not to exceed 6 months, the use of supplementary controls, including worker rotation, in conjunction with monitoring miners' exposures with CPDMs to reduce affected miners' dust exposure. When making such request, the operator would have to provide a report that: (1) Evaluates the specific situation in the MMU; (2) outlines all controls that will be used during this time period to prevent miners from being exposed to concentrations exceeding the applicable standard; (3) addresses the actions that will be taken to reduce miners' exposures through the use of engineering and environmental controls; and (4) establishes the time line for the implementation of the engineering and environmental controls. MSHA believes that the report submitted by the operator should be made by a knowledgeable mine employee such as an industrial hygienist, safety and health engineer, or other person with experience in respirable dust control. The District Manager would address the request through the approval process associated with the mine ventilation plan.

Engineering controls, also known as environmental controls, are the most protective means of controlling dust generation at the source. To control respirable dust, MSHA requires engineering or environmental controls as the primary means of controlling respirable dust. This is consistent with the Mine Act and generally accepted industrial hygiene principles. Used in the mining environment, engineering controls work to reduce dust generation at the source, or suppress, dilute, divert, or capture the generated dust. Unlike administrative controls, well-designed engineering controls or environmental controls provide consistent and reliable protection to all workers because the controls are not dependent on individual human performance, supervision, or intervention to function as intended. However, the proposal would allow limited short-term use of measures to supplement engineering or environmental controls to accommodate operators that may have difficulty meeting the applicable standards by the compliance dates that would be established by the final rule.

Any approved use of supplementary controls would only be in effect for a period not to exceed 6 months. MSHA believes that a 6-month period is a reasonable time within which supplementary controls may be used. If approved, supplementary controls would be permitted until other feasible engineering or environmental controls are implemented or MSHA determines that the supplementary controls are no longer necessary. In addition, if an operator cannot meet the applicable standard after the 6-month period, the operator may make another request to use supplementary controls; however, the use of supplementary controls would not be permitted beyond the 24 months following the effective date of the final rule. MSHA believes that the 24-month period allows operators sufficient time to implement engineering or environmental controls

to control respirable dust in the active workings of the mine atmosphere. MSHA specifically requests comments on the Agency's proposed approach to the use of supplementary controls, including any suggested alternatives, with supporting rationale.

K. Section 70.209 Sampling of Designated Areas

Proposed § 70.209 is derived from existing § 70.208 and would address sampling of designated areas (DAs). It would revise existing § 70.208 when operators use a CMDPSU and add new requirements when operators use a CPDM.

Proposed § 70.209 would apply initially to all DAs, but according to § 70.201(b), after [date 18 months after the effective date of the final rule] or upon implementation of the use of CPDMs, DAs associated with an MMU would be redesignated as ODOs and would no longer be subject to the proposed sampling provisions of this section. However, proposed § 70.209 would continue to apply to outby areas identified as DAs by the operator under proposed § 75.371(t).

Proposed § 70.209(a) would revise existing § 70.208(a) and require operators, who are using CMDPSUs or CPDMs, to sample each DA for five consecutive shifts every calendar quarter. The quarterly periods would be: (1) January 1–March 31; (2) April 1–June 30; (3) July 1–September 30; and (4) October 1–December 31.

Under the existing standard, operators are required to take one sample during the sampling period, with the potential under existing § 70.208(c) that five additional samples must be collected to make a compliance determination. Proposed § 70.209 would revise the existing standard to require the operator to take five DA samples on consecutive production shifts during the sampling period. One commenter on the CPDM RFI recommended less frequent CPDM sampling in outby areas, stating that historic sampling results indicate that exposure in outby areas is far lower than where coal is extracted. MSHA believes that, under the proposal, requiring operators to take five samples in a short period of time, such as consecutive production shifts, provides a better representation of the mining cycle and whether dust controls are effective in protecting miners who work in these areas. Since the five DA samples would provide a more accurate portrayal of mining activities and dust conditions, MSHA also believes it is reasonable to reduce the sampling period frequency from bimonthly to a quarterly basis.

Proposed § 70.209(b), (b)(1), and (b)(2) would apply when the respirable dust standard has been changed under proposed § 70.101 due to the presence of quartz.

Proposed § 70.209(b) is new and would require that when the applicable dust standard is changed in accordance with proposed § 70.101 (Respirable dust standard when quartz is present), the new applicable standard would be effective on the first production shift following the operator's receipt of notification of the change from MSHA. The proposal would provide increased health protection for miners by ensuring prompt implementation of the new applicable standard when quartz is present. The proposed provision is consistent with Agency policy and proposed § 70.207(c), which is discussed elsewhere in the preamble. The rationale for proposed § 70.209(b) is the same as that for proposed § 70.207(c), discussed elsewhere in the preamble.

Proposed § 70.209(b)(1) is derived from existing § 70.208(b). Under the proposal, if all samples from a DA taken during the most recent quarterly sampling period do not exceed the new applicable standard, the operator would begin sampling of the DA on the first production shift during the next quarterly period following notification from MSHA of the change in the applicable standard. Proposed § 70.209(b)(1) is consistent with Agency policy, existing § 70.208(b), and proposed § 70.207(c)(1), which is discussed elsewhere in the preamble.

Proposed § 70.209(b)(2) is new and would require that if any sample from the most recent quarterly sampling period exceeds the new applicable standard (reduced due to the presence of quartz), the operator must make necessary adjustments to the dust control parameters within three days, and then collect samples from the affected DA on consecutive shifts until five valid representative samples are collected. The samples would be treated as normal quarterly samples. Proposed § 70.209(b)(2) is consistent with proposed § 70.207(c)(2). The rationale for proposed § 70.209(b)(2) is the same as that for proposed § 70.207(c)(2), which is discussed elsewhere in the preamble.

Proposed § 70.209(c) is new and would require that no valid single-shift equivalent concentration shall meet or exceed the ECV that corresponds to the applicable standard. Tables 70–1 and 70–2 list ECVs for operators using CMDPSUs or CPDMs, respectively. Proposed § 70.209(c) is consistent with proposed § 70.207(e), and other proposed provisions in parts 71 and 90. The rationale for proposed § 70.209(c) is the same as that for proposed § 70.207(e), which is discussed elsewhere in the preamble.

Proposed § 70.209(d) would revise existing § 70.208(d) and would require that upon issuance of a citation for a violation of the applicable standard, paragraph (a) (quarterly sampling) and (b)(2) (sampling when a respirable dust standard is changed due to quartz) would not apply to the DA until the violation is abated in accordance with proposed paragraph (e). Except for minor and conforming changes, the proposal would be essentially the same as the existing standard.

Proposed § 70.209(e) is new and would require the operator to take actions, listed in paragraphs (e)(1) through (e)(3), during the time for abatement fixed in a citation for violation of the applicable standard. Proposed (e)(1) would require the operator to make approved respirators available to affected miners in accordance with proposed § 72.700. Proposed (e)(2) would require the operator to submit to the District Manager for approval proposed corrective actions to lower the concentration of respirable dust to within the applicable standard. Proposed (e)(3) would require that, upon approval by the District Manager, the operator implement the proposed corrective actions and then sample the affected DA on each production shift until five valid representative samples are taken. Proposed § 70.209(e) is consistent with proposed § 70.207(g). The rationale for proposed § 70.209(e) is identical to that for proposed § 70.207(g), which is discussed elsewhere in the preamble.

Proposed § 70.209(f) is new and would establish that a citation for violation of the applicable standard will be terminated by MSHA when: (1) The equivalent concentration of each of the five valid operator abatement samples is at or below the applicable standard; (2) the operator submits revised dust control parameters as part of the mine ventilation plan applicable to the DA; and (3) the District Manager approves the revised dust control parameters. The proposal also requires that the revised dust control parameters must reflect the control measures used to abate the violation. Proposed § 70.209(f) and its rationale are identical to proposed § 70.207(h), which is discussed elsewhere in the preamble.

Proposed § 70.209(g) would apply to operators who use CPDMs to sample DAs. It would require that operators take actions listed in paragraphs (g)(1)

through (g)(4), if a valid end-of-shift equivalent concentration exceeds the applicable standard but is less than the ECV that corresponds to the applicable standard in Table 70–2. Proposed § 70.209(g)(1) and (g)(2) would require the operator to make respirators available to affected miners and implement corrective actions. Proposed § 70.209(g)(3) would require the operator to record the reported excessive dust condition as part of and in the same manner as the records for hazardous conditions required by existing § 75.363. Proposed § 70.209(g)(3)(i)–(g)(3)(v) specify the information to include in the record. Proposed § 70.209(g)(4) would require the operator to review the adequacy of the approved CPDM Performance Plan. It would also require the operator to submit to the District Manager for approval any plan revisions to the CPDM Performance Plan within 7 calendar days after posting of the end-of-shift equivalent concentration on the mine bulletin board. Proposed § 70.209(g) and its rationale are identical to proposed § 70.208(g), which is discussed elsewhere in the preamble.

The proposed rule would make other minor changes to existing § 70.208. Existing § 70.208(e) would be deleted because § 75.371 addresses where DA samples are collected. The proposed rule would redesignate without change existing § 70.208(f), which addresses revocation of operators' mine ventilation plans, as proposed § 70.209(h).

L. Section 70.210 Respirable Dust Samples; Transmission by Operator

Proposed § 70.210, redesignated from existing § 70.209, would revise requirements for the operator to transmit respirable dust sampling information collected by either a CMDPSU or CPDM. It would revise paragraphs (a) and (c) and add a new paragraph (f); paragraphs (b), (d) and (e) would remain the same.

Proposed paragraph (a) would make a non-substantive change to clarify that it only applies to operators' transmission of samples collected with a CMDPSU.

Proposed paragraph (c) would retain the existing requirement that only persons certified in sampling complete the dust data card provided by the manufacturer of the filter cassette. It would be revised to require that each dust data card be signed by the certified person who actually performed the sampling shift examinations. For example, under the proposal, the certified person who performs required sampling shift examinations would be responsible for signing the dust data card and verifying the proper flow rate, or noting on the back-side of the card that the proper flowrate was not maintained. Since the certified person who conducted the examination is the most knowledgeable of the conditions surrounding the examination, MSHA would require that person to sign the dust data card.

Consistent with MSHA's existing policy, the proposal would also require that the person's signature on the data card include that person's MSHA Individual Identification Number (MIIN). Since July 1, 2008, MSHA has required that the certified person section of the dust data card include the MIIN, a unique identifier, for the certified person, instead of the social security number. To assure privacy and to comport with Federal requirements related to safeguarding personal-identifiable information, MSHA has eliminated use of social security numbers on its documents.

Proposed paragraph (f) is new and would apply when operators use CPDMs to sample. It would require that, within 12 hours after the end of the last sampling shift of the work week, a designated mine official must validate, certify, and transmit electronically to MSHA all daily sample and error data file information collected during the previous calendar week (Sunday through Saturday) and stored in the CPDM. It would also require the operator to maintain all CPDM data files transmitted to MSHA for at least 12 months.

Some commenters to the CPDM RFI stated that MSHA should be responsible for downloading all CPDM sampling data. MSHA has not included this suggestion in the proposal. Under the proposal, mine operators would download end-of-shift sampling information for weekly transmission to MSHA. Operators have the primary responsibility for providing miners with safe and healthy working conditions. Part of that responsibility includes sampling the working environment to assure that miners do not suffer material impairment of health or functional capacity from exposure to respirable dust. Data are stored in the CPDM memory for about 20 shifts. Operators, who would be in possession of CPDMs, would be in the best position to prevent data loss and to download and transmit CPDM data to MSHA in a timely manner.

Some commenters to the CPDM RFI suggested various timeframes for operators' CPDM data transmission to MSHA, ranging from every shift, to every week, to at least once a month. MSHA believes that transmitting data every shift would be burdensome on operators and the Agency, with negligible potential benefit. Similarly, MSHA believes that monthly transmission is too infrequent, given the CPDM's limited memory capacity noted in the previous discussion. The proposal reflects a balance between MSHA's need for the data and a reasonable transmission schedule and would require weekly transmission of daily sampling and error data file information from the CPDM. The Agency solicits comment on an appropriate timetable for operators' transmission of CPDM data to MSHA. Please be specific in your comments and include rationale for your suggestions.

Some commenters on the CPDM RFI recommended that the CPDM sampling data downloaded to MSHA should be incapable of alteration (*i.e.,* read-only). Proposed § 70.210(f) would require that sampling data stored in the CPDM be sent to the MSHA internet portal. To be approved under MSHA's new part 74 final rule (75 FR 17512), the CPDM must be designed to prevent intentional tampering or inadvertent altering of monitoring results. The part 74 final rule requires that the CPDM have a safeguard or indicator which either prevents altering the measuring or reporting functions of the device or indicates if these functions have been altered.

M. Section 70.211 Respirable Dust Samples; Report to Operator; Posting

Proposed § 70.211, redesignated from existing § 70.210, would address data contained in MSHA's report of respirable dust samples provided to operators. It would also address requirements for the operators' posting of sampling data. Proposed § 70.211 would include non-substantive changes in paragraphs (a)(2) through (a)(4), and add a new paragraph (c). The other provisions would remain the same.

Proposed paragraph (a)(2) would replace the language "mechanized mining unit or designated area" with "locations" to assure that all areas where samples are taken in the mine would be included (*i.e.,* DOs, ODOs, and DAs).

Proposed paragraphs (a)(3) and (a)(4) would include conforming changes by adding that the concentration of respirable dust be expressed "as an equivalent concentration." The changes are consistent with other proposed provisions that specify that the concentration of respirable coal mine dust is converted to and expressed as an 8-hour equivalent concentration.

Proposed paragraph (c) is new and would apply to operators who use a CPDM. It would require the designated

mine official to validate, certify, and post certain sampling information on the mine bulletin board. Proposed paragraph (c)(1) would require the designated mine official to post the daily end-of-shift sampling results within 1 hour after the end of the sampling shift. The daily posting must include the: Mine identification number; location in the mine from which samples were taken; respirable dust concentration expressed as an equivalent concentration for each valid sample; total amount of exposure accumulated by the sampled occupation during the shift; occupation code, where applicable; reason for voiding any sample; and shift length. This information, similar to that required under existing § 70.210, would provide miners with sampling and exposure information for the shift. Under the proposal, the District Manager could require any other information, such as the person responsible for sampling during the shift and unique mining activities (*e.g.,* retreat mining, and cutting overcast).

Proposed paragraph (c)(2) would require the designated mine official to post the weekly accumulated exposure (WAE) and the weekly permissible accumulated exposure (WPAE) for each occupation and for each crew within two hours after the end of the last sampling shift of a work week (Sunday through Saturday). If an operator employs multiple crews on a single MMU, the proposal would require that the WAE and WPAE for each crew be posted. Posting the WAE and WPAE would provide miners with the total amount of coal mine dust accumulated during the work week, as well as the maximum amount of accumulated exposure to coal mine dust permitted to be received during a normal work week. Posting these data would assure that miners are informed of their weekly exposure levels so that they can take a proactive role in their health protection.

Proposed paragraph (c)(3) would require the information to be posted for at least 15 calendar days. In response to the CPDM RFI, some commenters suggested that the information be posted for 31 days. One commenter stated that the information should be available to any interested party, should be posted for 31 days and available thereafter on request. Some commenters stated that MSHA should develop a standard format for reporting data. Since the CPDM would generate daily and weekly reports, the Agency believes that 15 days is an adequate amount of time to assure that all affected miners would be informed of their daily and weekly exposure levels. MSHA is concerned that requiring daily and weekly reports to be posted for 31 days would cause the mine bulletin board to become cluttered, making it difficult for miners to sort through the data. The Agency requests comment on an appropriate amount of time for posting and a standard format for reporting data. Please be specific in your comments and include rationale for your suggestions.

N. Section 70.212 Status Change Reports

Proposed § 70.212, redesignated from existing § 70.220, would revise paragraph (a) and add a new paragraph (c). Paragraph (b) would remain the same.

Proposed paragraph (a) would provide operators the option of reporting to MSHA changes in operational status of the mine, MMU, or DA electronically instead of in writing.

Proposed paragraph (c) is new and would require the designated mine official to report status changes that affect the operational readiness of any CPDM within 24 hours after the status change has occurred. Examples could include a malfunction or breakdown of a CPDM that is needed for sampling, or failure to have a spare CPDM available for required sampling. Since MSHA would rely on data provided by the CPDM to evaluate dust controls and to assure that miners are not exposed to excessive levels of respirable coal mine dust, the Agency would need to be informed of any circumstances that would affect the operational readiness of CPDMs.

30 CFR Part 71

A. Section 71.2 Definitions

The proposed definitions, approved sampling device, CMDPSU, CPDM, equivalent concentration, and quartz, are the same as proposed part 70 definitions discussed elsewhere in the preamble related to proposed § 70.2.

Designated Work Position (DWP)

The proposal would revise the existing definition of *designated work position (DWP)* to mean a work position at a surface area of a coal mine required to be sampled under this standard. Consistent with Agency policy, the proposed definition would require that the DWP designation consist of a four-digit surface area number assigned by MSHA identifying the specific physical portion of a surface coal mine or surface area of an underground mine that is affected, and a three-digit MSHA coal mining occupation code describing the location to which a miner is assigned in the performance of his or her regular duties.

Representative Samples

The proposal would add a new definition for *representative samples.* It would be defined as respirable dust samples that reflect typical dust concentration levels in the working environment of the DWP when the miner is performing normal duties.

MSHA would consider that "typical dust concentration levels" are present during sampling if they approximate and are characteristic of the DWP's dust concentration levels during periods of non-sampling. Under the proposed rule, samples must be taken while the DWP is engaged in normal work duties.

The proposed definition would be added to ensure that operators conduct dust sampling when working conditions accurately represent miners' dust exposures. This would allow operators and MSHA to more effectively evaluate the performance of dust controls and the adequacy and effectiveness of operators' approved plans.

Work Position

The proposal would make a non-substantive change by adding the term "three-digit" to the existing definition of *work position.* The proposal is consistent with the Agency's practice of identifying the specific position being sampled. The proposed change would ensure that MSHA can properly correlate each dust sample with the work location, position and shift from which it was obtained.

B. Section 71.100 Respirable Dust Standards

The proposed rule would, over a phase-in period, lower the concentration limit for respirable coal mine dust for surface coal mines and for surface work areas of underground coal mines.

Proposed paragraph (a) would retain the existing requirement that mine operators continuously maintain the average concentration of respirable dust in the mine atmosphere during each shift to which each miner in the active workings of each mine is exposed at or below 2.0 mg/m^3 of respirable dust.

Proposed paragraphs (b) through (d) are new and would require mine operators to lower dust levels, over a 24-month phase-in period, from the existing level of 2.0 mg/m^3 of air to 1.0 mg/m^3. MSHA solicits comment on the proposed phase-in periods and requests that a detailed rationale accompany any comment or recommendation that is submitted.

Proposed § 71.100(a) through (d) are identical to proposed § 70.100(a)(1) through (a)(4) and the rationale is

discussed elsewhere in the preamble related to proposed § 70.100(a)(1) through (a)(4).

C. Section 71.101 Respirable Dust Standard When Quartz is Present

Proposed § 71.101 would be identical to proposed § 70.101, discussed elsewhere in this preamble.

D. Section 71.201 Sampling; General and Technical Requirements

The proposed rule would revise operator sampling requirements in existing § 71.201.

Proposed paragraph (a) would make a nonsubstantive change to existing § 71.201(a) to clarify that the respirable dust samples taken in the active workings be "representative samples". The term "representative samples" is discussed elsewhere in the preamble related to definitions.

Proposed paragraph (b) would retain the existing requirement that sampling devices be worn or carried directly to and from the DWP to be sampled. It would revise the existing standard to require that sampling devices remain with the DWP and be operational during the entire shift, even when the shift exceeds 8 hours (extended shift). This would include the time spent in the DWP and while traveling to and from the DWP being sampled. Proposed § 71.201(b) is consistent with proposed § 70.201(e); however, the language in proposed § 71.201(b) would be tailored to apply to DWPs. The rationale for the proposed provision is the same as that in proposed § 70.201(e), which is discussed elsewhere in the preamble.

Proposed paragraph (b)(1) is new and would address work shifts longer than 12 hours. It would require that when using a CMPDSU and the work shift to be sampled is longer than 12 hours, the operator would have to switch-out the unit's sampling pump prior to the 13th hour of operation. Proposed § 71.201(b)(1) is the same as proposed § 70.201(e)(1).

Proposed paragraph (b)(2) is new and would add a similar requirement to address work shifts longer than 12 hours when operators use CPDMs. It would require the operator to switch-out the CPDM with a fully charged device prior to the 13th-hour of operation. Proposed paragraph (b)(2) is the same as proposed § 70.201(e)(2). The rationale for proposed § 71.201(b)(1) and (b)(2) is discussed elsewhere in the preamble related to proposed § 70.201(e)(1) and (e)(2).

Proposed paragraphs (c)(1) through (c)(4) are new and would require: The mine operator to use one control filter for each shift of sampling when a CMDPSU is used; each control filter to have the same pre-weight date (noted on the dust data card) as the filters used for sampling; each control filter to remain plugged at all times; each control filter to be exposed to the same time, temperature, and handling conditions as the filter used for sampling; and that each control filter be kept together with the exposed samples after sampling. Proposed § 71.201(c)(1) through (c)(4) are identical to proposed § 70.201(f)(1) through (f)(4) and the rationale is discussed elsewhere in the preamble related to proposed § 70.201(f).

The proposed rule would revise and move existing § 71.201(d) to proposed § 71.207(k), which would apply to operators who use a CMDPSU or a CPDM for sampling DWPs. Proposed § 71.207(k) is discussed elsewhere in the preamble.

Proposed paragraph (d) is new and would require the operator to make a record showing the length of each normal work shift for each DWP, retain the records for at least six months, and make them available for inspection by authorized representatives of the Secretary and the miners' representative. Mine operators would need to know the length of the normal work shift to determine the equivalent concentration. MSHA would use these records to verify that operators are accurately recording the normal work shift lengths so that miners are not being overexposed.

Proposed paragraph (e), redesignated from existing paragraph (c), would be revised to require that, upon request from the District Manager, the operator would submit the date and time any respirable dust sampling would begin. This information would have to be submitted to the District Manager at least 48 hours prior to scheduled sampling. The proposed 48-hour notification requirement would provide the Agency the opportunity to observe and monitor operator sampling, which would ensure that both operating conditions and sampling requirements are met.

Proposed paragraphs (f)(1) through (f)(2), redesignated from existing (e)(1) and (e)(2), retain the existing requirements.

Proposed paragraph (g) is new and would require mine operators using CPDMs to provide training to all miners expected to wear one. This would include each highwall drill operator, bulldozer operators, and other work positions determined by results of respirable dust samples to have the greatest respirable dust concentration. Proposed § 71.201(g) is the same as proposed § 70.201(j) and the rationale is discussed elsewhere in the preamble related to proposed § 70.201(j). In addition, proposed paragraphs (g)(1)–(5), which are identical to proposed § 70.201(j)(1)–(5), would establish the CPDM training that would be required. The rationale, discussed elsewhere in the preamble, is the same for both.

Proposed paragraph (h) is new and would require mine operators to maintain a record of training at the mine site for two years following completion of training. MSHA believes it is important to retain these records to verify that the required training has been provided. Proposed paragraph (h) would also permit a mine operator to maintain the record at another location as long as the record could be immediately accessed electronically from the mine site. Finally, proposed paragraph (h) would require that upon request by an authorized representative of the Secretary, Secretary of HHS, or miners' representative, the mine operator must promptly provide access to any such training record. Proposed § 71.201(h) is the same as proposed § 70.201(k) and the rationale is discussed elsewhere in the preamble related to proposed § 70.201(k).

E. Section 71.202 Certified Person; Sampling and § 71.203 Certified Person; Maintenance and Calibration

Proposed §§ 71.202 and 71.203 would be identical to proposed §§ 70.202 and 70.203, discussed elsewhere in this preamble.

F. Section 71.204 Approved Sampling Devices; Maintenance and Calibration

Proposed § 71.204 would be identical to proposed § 70.204, discussed elsewhere in this preamble.

G. Section 71.205 Approved Sampling Devices; Operation; Air Flowrate

Proposed § 71.205 would be identical to proposed § 70.205 with one exception. The last sentence of proposed §§ 70.205(b)(1) is not included in proposed § 71.205 since it applies to underground areas of anthracite coal mines. The rationale for proposed § 71.205 is the same as that for proposed § 70.205, which is discussed elsewhere in the preamble.

H. Section 71.206 CPDM Performance Plan

Proposed § 71.206 would be identical to proposed § 70.206, discussed elsewhere in this preamble, with one exception. Proposed § 71.206(b)(1) would require the Plan to include the designated work positions (DWPs) that would be sampled, and each DWP would be required to be identified by a

unique 9-digit number. Though the 9-digit identification number would be determined similarly to the identification number that would be required for each MMU occupation in underground mines, it would be modified to account for the operation of surface mines.

I. Section 71.207 Sampling of Designated Work Positions

Proposed § 71.207 is derived from existing § 71.208 and would address sampling of designated work positions (DWPs) when using a CMDPSU or CPDM.

Proposed § 71.207(a) would revise existing § 71.208(a) and require operators, who are using CMDPSUs or CPDMs, to take one sample every calendar quarter from the working environment of each DWP. The quarterly periods would be: (1) January 1–March 31; (2) April 1–June 30; (3) July 1–September 30; and (4) October 1–December 31. Like the existing rule, the proposal would require that one valid sample be taken from each DWP. It would require that each sample be a "representative sample," and would no longer include the term "respirable dust sample." The term representative sample is new and is discussed elsewhere in this preamble in proposed § 71.2 related to definitions. The proposed change to include a representative sample would offer greater protection for miners since it would provide a more accurate portrayal of miners' respirable dust exposure. The proposed rule would reduce the existing DWP sampling frequency from bimonthly to quarterly. However, as discussed below for proposed paragraph (b), the proposal would require operators to sample an increased number of DWPs, which are associated with higher dust concentrations, at a frequency to assure that all miners in those positions are protected.

Proposed § 71.207(b) is new and would require operators to collect DWP samples at designated locations to measure respirable dust generation sources in the active workings. The proposal would require that DWP samples be collected from the following positions: each highwall drill operator (MSHA occupation code 384); bulldozer operators (MSHA occupation code 368); and other work positions designated by the District Manager for sampling in accordance with proposed § 71.207(f). The proposal would require that each highwall drill operator be sampled since historical sampling data and MSHA experience indicate that these positions have the greatest potential of being overexposed to respirable quartz and respirable coal mine dust. Bulldozer operators would be DWPs since they have similar risks and need additional protection. Under circumstances specified in proposed § 71.207(c), discussed below, some bulldozer operators could be exempt from sampling requirements. Also, the District Manager could designate other work positions for sampling in accordance with proposed § 71.207(f) discussed below. MSHA believes that the proposed rule would provide improved health protection for miners in work positions that have increased risks of overexposure to respirable dust and quartz.

Proposed § 71.207(c) is new and would require operators with multiple work positions specified in paragraphs (b)(2) (bulldozer operators) and (b)(3) (other work positions) to sample the DWP exposed to the greatest respirable dust concentration in each work position performing the same activity or task at the same location and exposed to the same dust generation source. MSHA recognizes that some bulldozer operator positions, or other work positions designated by the District Manager, may have variable respirable dust exposure. In those cases, the proposal would require the operator to sample only the DWP exposed to the greatest respirable dust concentration. For example, if two bulldozer operators push overburden at the same location, the operator would sample the bulldozer operator exposed to the greatest concentration of respirable dust. MSHA believes this would assure that other miners performing similar tasks at the same location are protected from excessive dust exposure. Also, if some bulldozer operators push overburden and others perform reclamation work, the mine operator would be required to sample one bulldozer operator pushing overburden and one bulldozer operator performing reclamation work. MSHA would not accept a respirable dust sample for the designated bulldozer operator performing reclamation work as a representative sample of the working environment for all bulldozer operators.

Proposed § 71.207(c) would also require operators to provide the District Manager with a list identifying the specific bulldozer operator positions and other work positions under proposed § 71.207(b)(2) and (b)(3) that will be sampled. The proposed timeframes for submitting the lists would be: (1) Active mines—by [date 60 days after publication of final rule]; (2) New mines—30 calendar days of mine opening; or (3) Changes in operational status that increase or reduce the number of active DWPs—within 7 calendar days. The proposed rule would require the lists be submitted to the District Manager to assure that the appropriate DWPs are identified for sampling. MSHA believes that the proposal would provide operators with sufficient time to identify and submit to the Agency the lists of DWPs to be sampled.

Proposed § 71.207(d), redesignated from existing § 71.208(h), would retain the requirement that DWP samples be taken on a normal work shift and that when a normal work shift is not achieved, the dust data card transmitted to MSHA must include a notation to that effect. The proposal would include a new requirement that certified persons must place the notation on the back side of the dust data card. MSHA experience indicates that operators do not always put the notation on the card in a conspicuous location, which increases the likelihood that this important information can be overlooked. The proposed revision is consistent with proposed § 70.205(b)(2) and Agency policy.

Proposed § 71.207(d) would continue to allow MSHA to void a DWP sample if a normal work shift is not achieved. It would delete the existing requirement that any sample greater than 2.5 mg/m^3 be used when a normal work shift is not achieved. Instead, the proposal would require that, if any sample exceeds the applicable standard by at least 0.1 mg/m^3, regardless of whether or not a normal work shift was achieved, the sample would be used to determine compliance with the applicable standard. The proposed provision is similar to proposed § 70.207(d). The rationale for proposed § 71.207(d) is the same as for proposed § 70.207(d), which is discussed elsewhere in the preamble.

Proposed § 71.207(e), redesignated from existing § 71.208(g), would include a minor, nonsubstantive change.

Proposed § 71.207(f), redesignated from existing § 71.208(e), would allow the District Manager to designate additional work positions for sampling where a concentration of respirable dust exceeding 50 percent of the applicable standard has been measured by one or more MSHA samples. Example: Suppose the applicable standard is 1.5 mg/m^3 and MSHA samples taken for a work position at a surface mine show respirable dust concentrations of 0.8 and 1.0 mg/m^3. Both samples exceed 0.75 mg/m^3, which is 50% of the applicable standard. Since the sampling results are at levels of concern, it is reasonable for the District Manager to designate the position as a DWP. The

proposal would assure the work environments of miners in these positions are sampled so that operators can determine if dust controls are adequate and that miners are sufficiently protected. The proposal is consistent with existing § 71.208(e) which requires District Managers to designate for sampling each work position where the average concentration of respirable dust exceeds 1.0 mg/m^3, which is 50% of the existing standard.

Proposed § 71.207(f) would also revise existing § 71.208(e) and provide that if the respirable dust standard is reduced in accordance with proposed § 71.101 to a level below the respirable dust standard under proposed § 71.100 (reduced standard due to quartz), the District Manager may designate additional work positions for sampling where the respirable dust concentration from one or more MSHA samples exceeds the new (reduced) applicable standard. For example: If based on samples from a work position, the respirable dust standard is reduced due to quartz from 1.5 mg/m^3 to 1.2 mg/m^3 and one or more MSHA samples for the position exceed 1.2 mg/m^3, the proposal would allow the District Manager to designate the work position as a DWP. The proposal would improve miners' health and assure that operators would be required to routinely sample work positions that have increased health risks due to respirable quartz.

Proposed § 71.207(g), redesignated from existing § 71.208(f) would provide that, upon finding that the operator is able to maintain continuing compliance with the applicable standard, the District Manager may withdraw a DWP designated for sampling under proposed paragraph (f) from sampling. Under the existing standard, the District Manager must withdraw the designation of a work position for sampling when such a finding is made. In both the existing and proposed rules, the District Manager's finding is based on the results of MSHA and operator samples taken during at least a one-year period. MSHA believes that requiring the withdrawal of the work position from sampling does not protect miners who are assigned duties that have temporarily kept them from high dust exposures since assigned duties in surface work positions, including truck drivers and front end loaders, can change. Under the proposal, the District Manager would have discretion to evaluate the potential duties of the DWP, and mining conditions, to determine whether the DWP should be withdrawn from sampling requirements.

Proposed § 71.207(h), (h)(1), and (h)(2) would apply when the respirable dust standard has been changed under proposed § 71.101 due to the presence of quartz.

Proposed § 71.207(h) is new and would require that when the applicable dust standard is changed in accordance with proposed § 71.101 (Respirable dust standard when quartz is present), the new applicable standard would be effective on the first normal work shift following the operator's receipt of notification of the change from MSHA. The proposal would provide increased health protection for miners by ensuring prompt implementation of the new applicable standard when quartz is present. The proposed revision is consistent with Agency policy and proposed § 70.207(c), which is discussed elsewhere in the preamble.

Proposed § 71.207(h)(1) is derived from existing § 71.208(b). Under the proposal, if all samples for the DWP from the most recent quarterly sampling period do not exceed the new applicable standard, the operator would begin sampling of the DWP on the first normal work shift during the next quarterly period following notification from MSHA of the change in the applicable standard. Proposed § 71.207(h)(1) is also consistent with Agency policy and proposed § 70.207(c)(1), which is discussed elsewhere in the preamble.

Proposed § 71.207(h)(2) is new and would require that if any sample from the most recent quarterly sampling period exceeds the new applicable standard (reduced due to the presence of quartz), the operator must make necessary adjustments to the dust control parameters within three days, and then collect a sample from the affected DWP on a normal work shift. The sample would be treated as a normal quarterly sample. MSHA believes that operators should take prompt actions to reduce the dust levels when the new applicable standard is exceeded and that three days is a reasonable amount of time to do so. Under the proposed rule, the additional sample would allow operators to make a timely determination as to whether dust controls are working effectively. Proposed § 71.207(h)(2) would afford additional protection for miners who need to be on a reduced standard.

Proposed § 71.207(i) is new and would require that no valid single-shift equivalent concentration shall meet or exceed the ECV that corresponds to the applicable standard. Tables 71–1 and 71–2 list ECVs for operators using CMDPSUs or CPDMs, respectively. Proposed § 71.207(i) is consistent with proposed § 70.207(e), which would apply when CMDPSUs are used, and § 70.208(d), which would apply when CPDMs are used. The rationale for the proposed provision is the same as that for proposed §§ 70.207(e) and 70.208(d), which are discussed elsewhere in the preamble.

Proposed § 71.207(j), redesignated from existing § 71.208(d), would require that upon issuance of a citation for a violation of the applicable standard, paragraphs (a) (quarterly sampling) and (h)(2) (sampling when a respirable dust standard is changed due to quartz) would not apply to the DWP until the violation is abated in accordance with proposed paragraph (k). Except for minor, nonsubstantive changes, the proposal would be essentially the same as the existing standard. The proposal would also make conforming changes to replace references to paragraphs that have been redesignated.

The proposed rule would redesignate and revise existing § 71.201(d) as proposed § 71.207(k), and would require operators to take actions, listed in proposed paragraphs (k)(1) through (k)(4), during the time for abatement fixed in a citation for violation of the applicable standard.

Proposed paragraph (k)(1) would require operators to make approved respirators available to the affected miners in accordance with proposed § 72.700. The proposal is consistent with existing § 70.300, which requires operators to make respiratory equipment available to all persons exposed to respirable dust concentrations exceeding levels required to be maintained. Proposed § 71.207(k)(1) is consistent with proposed § 70.207(g)(1). The rationale for proposed § 71.207(k)(1) is the same as that for proposed § 70.207(g)(1), which is discussed elsewhere in the preamble.

Proposed paragraph (k)(2) would require operators to submit to the District Manager for approval proposed corrective actions to lower the concentration of respirable dust to within the applicable standard. Proposed paragraph (k)(3) would require that, upon approval by the District Manager, operators must implement corrective actions and then sample the affected DWP on each normal work shift until five valid representative samples are taken. Proposed paragraphs (k)(2) and (k)(3) are derived from existing § 71.201(d) and are consistent with generally accepted occupational industrial hygiene principles. MSHA believes that if a citation is issued for a violation of the applicable standard, operators must take action to protect miners, including making respiratory protection available, evaluating dust

control measures, and implementing new measures, as necessary, to reduce miners' risks of dust exposure.

Proposed paragraph (k)(4) would require operators to review the adequacy of the approved CPDM Performance Plan. If any CPDM Performance Plan revisions are needed, it would require operators to submit proposed revisions to the District Manager for approval within 7 calendar days following posting of the applicable end-of-shift equivalent concentration on the mine bulletin board. MSHA believes that when the respirable dust concentration meets or exceeds an applicable ECV, the operator should be required to review the CPDM Performance Plan to determine whether revisions are necessary to prevent miners from being overexposed in the future. In addition, MSHA believes a 7-calendar day period is a reasonable amount of time for the operator to review and submit CPDM plan revisions for approval. This proposed provision is consistent with proposed § 70.208(f)(4) which would apply when operators use a CPDM.

MSHA believes that proposed § 71.207(k)(2)–(4) would assure that effective proposed corrective actions are reviewed by the District Manager and implemented by operators in a timely manner.

Proposed § 71.207(l) is new. It would allow MSHA to terminate a violation of the applicable standard when: (1) The equivalent concentration of each of the five valid operator abatement samples is at or below the applicable standard; and (2) within 15 calendar days after receipt of MSHA's sampling results, the operator submits to the District Manager for approval a proposed dust control plan applicable to the DWP, or proposed changes to the approved dust control plan, as prescribed in proposed § 71.300. The proposal also would require that proposed plan parameters or proposed changes reflect the control measures used to abate the violation. The proposed provision is consistent with proposed §§ 70.207(h), 70.209(f), and 90.208(f). MSHA believes that 15 calendar days is a reasonable amount of time for the operator to prepare and submit a dust control plan or changes to that plan. The proposal would assure that dust control parameters in the approved dust control plan for the DWP are appropriate and demonstrate that they effectively reduce concentrations of respirable dust.

The proposed rule would redesignate existing § 71.208(c) as proposed § 71.207(m). Proposed § 71.207(m) would remain essentially the same as existing § 71.208(c), with minor changes. Like the existing standard, proposed § 71.207(m) would apply to operators who use a CMDPSU to meet DWP sampling requirements. If MSHA notifies the operator that a valid representative sample taken from a DWP exceeds the applicable standard but is less than the ECV that corresponds to the applicable standard in Table 71–1, the operator would be required, within 15 calendar days of notification, to sample the DWP until five valid representative samples are collected. The term "representative sample" is new and discussed elsewhere in the preamble related to definitions in proposed § 71.2. Also, the proposal would require that operators begin sampling on the first normal work shift following receipt of MSHA's notification and that samples be evaluated to determine compliance with the applicable standard for the sampling period.

Proposed § 71.207(n) is derived from existing § 71.208(c) and would apply to operators who use a CPDM to meet the DWP quarterly sampling requirements under proposed paragraph (a). Proposed paragraph (n)(1) is similar to proposed paragraph (m). It would require the operator to sample the DWP until five valid representative samples are collected when a valid end-of-shift equivalent concentration exceeds the applicable standard but is less than the ECV that corresponds to the applicable standard in Table 71–2. Sampling would be required to begin on the first normal work shift after the operator determines that the applicable standard is exceeded and the samples would be evaluated to determine compliance with the applicable standard for the sampling period. The rationale for sampling under proposed paragraph (n)(1) is the same as that for proposed paragraph (m).

Proposed paragraph (n)(2) is new and would require the operator to review the adequacy of the approved CPDM Performance Plan. If any CPDM Performance Plan revisions are needed, it would require the operator to submit proposed revisions to the District Manager for approval within 7 calendar days following posting of the end-of-shift equivalent concentration on the mine bulletin board. MSHA believes that if an end-of-shift respirable dust concentration meets or exceeds an applicable ECV, the operator should be required to review the CPDM Performance Plan to determine whether revisions are necessary to prevent miners from being overexposed in the future. A 7-calendar day period is a reasonable amount of time for the operator to review and submit CPDM plan revisions for approval. This proposed provision is consistent with proposed §§ 70.208(g)(4), 70.209(g)(4), and 90.209(f)(4).

J. Section 71.208 Respirable Dust Samples; Transmission by Operator

Proposed § 71.208, redesignated from existing § 71.209, would revise requirements for the operator to transmit respirable dust sampling information collected by either a CMDPSU or CPDM. It would revise paragraphs (a) and (c) and add a new paragraph (f); paragraphs (b), (d), and (e) would remain the same.

Proposed paragraph (a) would make a non-substantive change to clarify that it only applies to operators' transmission of samples collected with a CMDPSU.

Proposed paragraph (c) would retain the existing requirement that only persons certified in sampling complete the dust data card provided by the manufacturer of the filter cassette. It would be revised to require that each dust data card be signed by the certified person who actually performed the sampling shift examinations. Consistent with MSHA's existing policy, the proposal would also require that the person's signature on the data card include that person's MSHA Individual Identification Number (MIIN). Proposed § 71.208(c) is similar to proposed § 70.210(c), and the rationale is discussed elsewhere in the preamble related to proposed § 70.210(c).

Proposed paragraph (f) is new and would apply when operators use CPDMs to sample. It would require that, within 12 hours after the end of the last sampling shift for a DWP, a designated mine official must validate, certify, and transmit electronically to MSHA all sample and error data file information collected during the previous shifts and stored in the CPDM. It would also require the operator to maintain all CPDM data files transmitted to MSHA for at least 12 months. Proposed § 71.208(f) is similar to proposed § 70.210(f), and the rationale is discussed elsewhere in the preamble related to proposed § 70.210(f).

K. Section 71.209 Respirable Dust Samples; Report to Operator; Posting

Proposed § 71.209, redesignated from existing § 71.210, would address data contained in MSHA's report of respirable dust samples provided to operators. It would also address requirements for the operators' posting of sampling data. Proposed § 71.209 would include non-substantive changes in paragraphs (a)(2) through (a)(4), revise paragraph (b), and add a new

paragraph (c). Paragraph (a)(1) would remain the same.

Proposed paragraph (a)(2) would replace "designated work position" with "DWP." Proposed paragraph (a)(3) would make a conforming change by adding that the concentration of respirable dust be expressed "as an equivalent concentration." The change is consistent with other proposed provisions that specify that the concentration of respirable coal mine dust is converted to and expressed as an 8-hour equivalent concentration, even when the total time worked is greater than 8 hours.

Existing paragraph (a)(4) would be deleted because the average concentration of respirable dust would be based on a valid single-shift sample under the proposed rule.

Existing paragraph (a)(5) would be redesignated as proposed paragraph (a)(4) and would retain the existing requirement that reasons for voiding samples be posted.

Proposed paragraph (b) would be revised to require operators to post sampling data for at least 46 days on the mine bulletin board. Existing regulations under parts 70 and 71 require operators to post sampling data for 50 percent of the specified sampling period (*e.g.,* 31 days is 50 percent of the bimonthly sampling period specified in existing § 71.208(a)). Since proposed § 71.207 would require operators to take DWP samples every calendar quarter, posting the sampling data for 46 days, which is approximately 50 percent of a quarterly sampling period, would be consistent with existing posting requirements.

Proposed paragraph (c) is new and would apply to operators who use a CPDM. It would require the designated mine official to validate, certify, and post certain sampling information on the mine bulletin board. Proposed paragraph (c)(1) would require the designated mine official to post the daily end-of-shift sampling results within 1 hour after the end of the sampling shift. The daily posting must include the: mine identification number; DWP at the mine from which samples were taken; respirable dust concentration expressed as an equivalent concentration for each valid sample; reason for voiding any sample; and shift length. This information, similar to that required under existing § 71.210, would provide miners with sampling and exposure information for the shift. Under the proposal, the District Manager could require any other information, such as activities being performed (hauling rock or hauling dust), physical conditions (rainy or dry) and the location sampled on the mine site (in the pit or on the mountain top).

Proposed paragraph (c)(2) would require the information to be posted for at least 46 calendar days. Proposed paragraph (c)(2) is identical to proposed paragraph (b) of this section, and the rationale is discussed earlier in this section of the preamble. The Agency requests comment on an appropriate amount of time for posting and a standard format for reporting data. Please be specific in your comments and include the rationale for your suggestions.

L. Section 71.210—Status Change Reports

Proposed § 71.210, redesignated from existing § 71.220, would revise paragraph (a) and add a new paragraph (c). Paragraph (b) would remain the same. Proposed paragraph (a) would provide operators the option of reporting to MSHA changes in operational status of the mine or DWP electronically instead of in writing. Proposed paragraph (c) would require the designated mine official to report status changes that affect the operational readiness of any CPDM within 24 hours after the status change has occurred. Proposed § 71.210(c) is identical to proposed § 70.212(c), and the rationale is discussed elsewhere in the preamble related to proposed § 70.212(c).

M. Section 71.300 Respirable Dust Control Plan; Filing Requirements

Proposed § 71.300 would revise existing requirements for operators who must file a dust control plan when they receive a citation for a DWP sample.

Proposed § 71.300(a) would require the operator to submit a dust control plan applicable to the DWP identified in the citation and that the plan be adequate to continuously maintain respirable dust within the applicable standard at the DWP. For clarification and consistency, the proposal would replace the term "work position" in existing § 71.300(a) with the term "DWP." The proposal would also replace language in the existing standard that requires the plan to be submitted "Within 15 calendar days after the termination date of a citation for violation of § 71.100 (Respirable dust standard) or § 71.101 (Respirable dust standard when quartz is present)" with "As required by § 71.207(l)." Proposed § 71.207(l) is discussed elsewhere in the preamble. Proposed § 71.300(a) would also replace the phrase "permissible concentration at the surface work position identified in the citation" with the phrase "applicable standard at the DWP." This is a nonsubstantive change and reflects MSHA's intent under the proposed rule that dust control measures identified in the respirable dust control plan must be sufficient to maintain dust levels at or below the applicable standard so that concentrations do not get to citable ECV levels. This would assure increased protections for miners.

Proposed § 71.300(a)(1) is new and would require operators to notify the representative of miners at least 5 days prior to submitting a proposed respirable dust control plan, or proposed revisions to an existing plan, to the District Manager for approval. The proposal would also require that, if requested, operators must provide a copy to the representative of miners at the time of the 5-day notification. This provision is consistent with procedures for submitting plans in other MSHA standards. MSHA experience reveals that input from miners on proposed dust provisions is important. The proposal would allow sufficient time for the miners' representative to become familiar with the proposed plan or revisions and to discuss and resolve any issues prior to submission to the District Manager for approval.

Proposed § 71.300(a)(2) is new and would require the operator to make available for inspection by the miners' representative a copy of the proposed respirable dust control plan and any proposed revisions that have been submitted for approval to the District Manager. This would ensure that the miners' representative would have access to copies of proposed plan documents for review.

Proposed § 71.300(a)(3) is new and would require a copy of the proposed respirable dust control plan, and a copy of any proposed revision, submitted to the District Manager for approval to be posted on the mine bulletin board at the time of submittal. The proposed dust control plan or proposed revision would be required to remain posted on the bulletin board until approved, withdrawn, or denied. The proposed posting requirement would ensure that miners are made aware of the content of the proposed plan.

Proposed § 71.300(a)(4) is new and would permit the representative of miners, following receipt of a proposed dust control plan or proposed revision, to submit timely, written comments to the District Manager for consideration during the review process. To receive consideration by the District Manager, the miners' representative would have to submit comments to the District Manager in a "timely" manner. Under the proposal, MSHA would construe "timely" to mean that miners'

representatives must submit comments within a reasonable time after they receive a copy of proposed plan provisions so the District Manager would have sufficient time to consider them in the review process.

Proposed § 71.300(a)(4) would require that, when requested, the District Manager must provide operators with a copy of the miners' representatives' comments. Proposed § 71.300(a)(2) and (a)(4) would ensure that all parties to the dust control plan process are aware of each others' positions on potential issues.

Proposed § 71.300(b)(1) and (b)(2) would include nonsubstantive changes and replace "designated work position" with "DWP" for consistency with other part 71 proposed provisions. No changes are proposed for existing § 71.300(b)(3) and (b)(4).

N. Section 71.301 Respirable Dust Control Plan; Approval by District Manager and Posting

Proposed § 71.301 would continue to address the criteria MSHA would use to approve, on a mine-by-mine basis, the dust control plan. MSHA is proposing revisions to § 71.301(a)(1) and 71.301(b), and proposing to add a new § 71.301(d)(1) through 71.301(d)(3). No changes are proposed for existing § 71.301(a)(2), (c), and (e).

For consistency and clarification, proposed § 71.301(a)(1) would provide that, in approving respirable dust control plans, the District Manager would consider whether the respirable dust control measures would likely maintain "concentrations of respirable coal mine dust at or below the applicable standard." Under the existing standard, the District Manager considers whether the dust control measures would likely maintain "compliance with the respirable dust standard." The proposed language would clarify that the District Manager's review would assure that control measures in the plan would likely maintain respirable dust concentrations at or below the applicable standard so that concentrations do not get to citable ECV levels. This would assure improved protection for miners.

Proposed § 71.301(b) would revise the existing standard to permit MSHA to take respirable dust samples to determine whether control measures in the operator's plan effectively maintain "concentrations of respirable coal mine dust at or below the applicable standard." MSHA's rationale for this proposal is the same as that described above for proposed § 71.301(a)(1). The proposed language would clarify that the operator's dust control measures must control dust to levels at or below the applicable respirable dust standard, which would ensure that concentrations do not get to citable ECV levels. This would assure improved protection for miners.

Proposed § 71.301(d)(1) is new and would require that, upon request and following notification of approval, the operator must provide the approved respirable dust control plan to the miners' representative. Proposed § 71.301(d)(2) is also new and would require the operator to make available the approved respirable dust control plan for inspection by the representative of miners. The proposed provisions are consistent with procedures for plan approval in other MSHA standards. They would ensure that the miners' representative would have timely access to the approved plan or plan revisions following notification of approval. They reflect MSHA's recognition that miners and their representatives play an important role in the plan approval process and need to be kept aware of the contents of the approved plan.

Proposed § 71.301(d)(3), derived from existing § 71.301(d), is new and would require the operator to post the respirable dust control plan on the mine bulletin board within 1 working day following notification of approval, and keep it posted for the period that the plan is in effect. The proposal would assure that miners, as well as their representatives, are aware of approved respirable dust control plan provisions. The Agency believes that allowing operators one full working day to post the plan is reasonable and would provide effective protection for miners.

30 CFR Part 72

A. Section 72.100 Periodic Examinations

Proposed § 72.100 is new and would add periodic spirometry, occupational history, and symptom assessment to the chest radiographic examinations already required to be offered to underground coal miners. It would extend the opportunity for those examinations to surface miners.

Proposed paragraph (a) would require mine operators to provide periodic examinations that include chest x-rays, spirometry, symptom assessment, and occupational history at no cost to the miner. Under NIOSH's existing Coal Workers' Health Surveillance Program (42 CFR part 37), "Specifications for Medical Examinations of Underground Coal Miners," underground coal mine operators are required to provide to underground coal miners and miners at surface areas of underground coal mines the opportunity for periodic evaluation with chest x-rays. Proposed paragraph (a) would extend chest x-ray examinations to coal miners at surface mines and implement a new requirement for spirometry examinations, symptom assessment, and occupational history for all coal miners. This proposal is consistent with recommendations of the Dust Advisory Committee and the NIOSH Criteria Document. The Dust Advisory Committee unanimously recommended that spirometry and questionnaire data be collected periodically and that medical testing be extended to surface coal miners. NIOSH recommended that the Coal Workers' X-Ray Surveillance Program be extended to include spirometry examinations, respiratory symptom and occupational history questionnaires, and surface coal miners.

MSHA is proposing a requirement for a spirometry examination because it is the most practical screening tool to detect reduced lung function in miners, which is the common evidence of Chronic Obstructive Pulmonary Disease (COPD). A requirement for a spirometry examination also complements the chest x-ray program by detecting effects, other than pneumoconiosis, of dust on the lung. The chest x-ray cannot detect COPD.

Miners at surface mines would be included in medical monitoring because they are also at risk of developing pneumoconiosis and COPD as a result of exposure to respirable coal mine dust. Some occupations at surface mines (*e.g.,* drill operators, bulldozer operators, and truck drivers) experience high exposure to silica and there are many former underground miners among surface miners with chest x-ray films that show pneumoconiosis. MSHA believes that this proposed requirement would provide improved health protection for all coal miners.

MSHA's proposal to extend chest x-ray examinations and implement a new requirement for spirometry would enable early detection of pneumoconiosis and COPD, respectively, both of which are irreversible and, for miners subject to continued overexposure, progressive. In the absence of medical monitoring and early intervention, a miner may continue to be overexposed, allowing the disease to progress so that the miner may suffer material impairment of health or functional capacity. For miners at surface mines, the proposal would allow them to have knowledge of the existence of pneumoconiosis so that they could exercise their rights to transfer to a less dusty job under proposed 30 CFR part 90. For all coal

miners, the proposed requirement for spirometry examinations would allow them to have knowledge of an abnormal decline in lung function, which would enable them to be proactive in their approach to their health.

Proposed paragraph (a)(1) would require mine operators to use NIOSH-approved facilities to conduct the examinations. Initial approval of facilities and subsequent renewals of approvals will be dependent upon meeting requirements specified by NIOSH. Approved facilities would: provide standardized methods for evaluating miners' health; have the necessary equipment and expertise for conducting tests, interpreting results, informing miners, and maintaining confidentiality of miners' health records; and be in locations that are accessible to miners.

Proposed paragraph (b) would require mine operators to provide miners the opportunity to have examinations specified in paragraph (a) at least every 5 years. Both pneumoconiosis and COPD develop slowly. It is unusual, for example, for a miner to have a positive chest x-ray less than ten years from first exposure to respirable coal mine dust. If a miner has a positive chest x-ray, it is important to intervene as promptly as possible for maximum health protection. An interval of 5 years or less between each miner's serial spirometry examinations should provide reasonable opportunity to assure detection of important declines in a miner's lung function due to dust exposure.

Early symptoms of pneumoconiosis or COPD may not appear to be important to miners so they might not be likely to seek medical assistance without regulatory intervention. More pronounced symptoms occur only after diseases become more advanced. The proposed requirement for periodic examinations is necessary for early detection of disease and early intervention to prevent progression of disease.

The proposal would also require mine operators to make examinations available during a 6-month period that begins no less than 3.5 years and not more than 4.5 years from the end of the last 6-month period. For example: If an operator provided examinations to miners during a 6-month period of July 1, 2009 to December 31, 2009, the operator would be notified by NIOSH by April 1, 2013, 3 months prior to July 1, 2013, to schedule the next 6-month period within which to offer miners the examinations. This proposed schedule is designed to give mine operators and approved facilities some flexibility in scheduling examinations and is consistent with the timeframes established in NIOSH's existing program.

Proposed paragraph (c) would require mine operators to provide the examinations specified in paragraph (a) to miners, who begin work at a coal mine for the first time (*i.e.,* the miner has never worked in any coal mine), when they are initially hired. Proposed paragraph (c)(1) would require that these initial examinations be made available no later than 30 days after beginning employment. Initial examinations would be mandatory for the miner. MSHA believes that examinations provided in close proximity to when miners are first hired and first exposed to respirable coal mine dust are necessary in order to establish an accurate baseline of the miner's health. The Agency solicits comment on an appropriate time for operators to make initial examinations available to miners. Please be specific in your comments and include rationale for your suggestions.

Proposed paragraph (c)(2), like the existing standard for chest x-rays, would require follow-up examinations to be provided within 3 years of the initial examinations. A 3-year rather than a 5-year interval at the start of the miner's career could provide necessary information for evaluating the results of spirometry tests. Several researchers noted that the decline in lung function due to dust is non-linear, sometimes with much of the decline coming early in the miner's career, often in less than three years. (Attfield & Hodous, 1992; Seixas NS, *et al.,* 1993). The Agency solicits comment on an appropriate time for operators to provide follow-up examinations to miners. Please be specific in your comments and include rationale for your suggestions.

Proposed paragraph (c)(3) would require the operator to provide follow-up examinations within 2 years, if the second chest x-ray (after the initial examination) shows evidence of pneumoconiosis or if the second spirometry examination shows evidence of reduced lung function. When this chest x-ray or spirometry examination indicates the presence of disease, more frequent testing would be necessary to detect and prevent further progression. There are some individuals who adversely respond to dust exposure relatively quickly and it is important to identify those individuals early.

Proposed paragraph (d), like the existing standard for chest x-rays, would require each mine operator to develop a plan for providing the medical examinations specified in paragraph (a) and to submit the plan to NIOSH for approval. The proposed requirement for a plan is essential to assure that mine operators provide the examinations within the established timeframes and at an approved facility. The proposed requirement for medical examinations would allow for early detection and treatment and, to be effective, it should be part of a comprehensive program designed to prevent further progression of early respiratory disease. The proposed requirement for submitted plans to include a roster specifying the name and current address of each miner covered by the plan would provide NIOSH with the ability to assure adequate notification of the availability of medical examinations to covered coal miners. NIOSH has required that such rosters be provided since the early 1990s, so this requirement would not create an additional burden for mine operators.

Proposed paragraph (e), like the existing standard for chest x-rays, would require each mine operator to post the approved plan for providing periodic examinations specified in paragraph (a) on the mine bulletin board and to keep it posted at all times. Posting the approved plan on the mine bulletin board can help to improve miners' awareness of the plan, and its purpose and provisions.

B. Section 72.700 Respiratory Equipment; Respirable Dust

Proposed § 72.700 would revise and redesignate existing § 70.300 to apply to all coal mines, whether surface or underground. The proposal would also add new training and record retention requirements related to respiratory equipment.

Proposed § 72.700(a) would revise and redesignate existing § 70.300 and would require operators to make NIOSH-approved respiratory equipment available to all persons as required by parts 70, 71 and 90. The proposal would revise the existing requirement and expand it to ensure that, as required under parts 70, 71, and 90, operators make respiratory equipment available to all persons, regardless of whether the person is at a surface mine, the surface area of an underground mine, or an underground mine. The existing standard does not cover persons at surface mines and surface areas of underground mines, nor miners subject to the part 90 requirements. Respirable dust is found not only in underground mining environments, but also at surface installations. Respirators can play an important role as an interim measure to reduce miners' exposure to respirable dust for short periods of time during which engineering and

environmental controls are being implemented. This interim protection is available for underground miners. MSHA believes that the existing protections afforded to underground miners should be extended to cover persons at surface mines, surface work areas of underground mines, and miners who are subject to the part 90 requirements.

Proposed § 72.700(a) would also require operators to maintain an adequate supply of respiratory equipment in order to make respirators available as required by the section. The existing requirement under § 70.300 provides that operators must maintain a supply of respiratory equipment adequate to deal with occurrences of concentrations of respirable dust in the mine atmosphere in excess of the levels required to be maintained under part 70. The proposal would expand the existing standard's scope of coverage to include parts 71 and 90. The Agency believes that operators should maintain an adequate supply of respiratory equipment so that any person, whether at a surface mine, the surface area of an underground mine, or an underground mine, as well as miners subject to the part 90 requirements, may avail themselves of the protections provided by respirators if they choose to do so.

Proposed § 72.700(a) would retain the existing requirement under § 70.300 that requires operators to use environmental control measures as the primary means of regulating respirable dust in the active workings. Consistent with the Mine Act, the proposal would prohibit the substitution of respirators for environmental control measures. Under existing practice and policy, engineering controls are the primary method used to control exposure to respirable dust. Section 202(h) of the Mine Act expressly prohibits the use of respirators as a substitute for environmental control measures in the active workings of a mine. The proposal is also consistent with the Dust Advisory Committee members' unanimous recommendation that respiratory equipment should not be permitted to replace environmental control measures, but should continue to be provided to miners until environmental controls are implemented that are capable of maintaining respirable dust levels within the applicable standard. The importance of using environmental controls was not only recognized by the Dust Advisory Committee, but also by NIOSH. NIOSH's 1995 Criteria Document recommends that engineering controls continue to be relied on as the primary means of protecting coal miners from respirable dust. Although MSHA received comments in 2000 and 2003 that operators should be allowed to use respiratory equipment in lieu of environmental and engineering controls to achieve compliance, proposed § 72.700(a) would retain the existing requirement that environmental controls be used as the primary means of complying with applicable dust standards. MSHA experience indicates that even when respirators are made available, miners may not use them because they can be uncomfortable and impractical to wear while performing work duties. In some cases, a miner may not be able to use a respirator due to health issues. General industrial hygiene principles recognize that engineering and environmental controls provide more consistent and reliable protection.

Proposed § 72.700(b) is new and would require training to be provided to all miners to whom respiratory protection must be made available under the proposal. It would require an operator to provide training prior to the affected miner's next scheduled work shift, unless the miner received training within the previous 12 months on the types of respirators that the operator makes available. The required training would include instruction on the types of respirators made available by the operator as well as instruction in the proper fitting, care, use and limitations of the respirators. The proposed training requirements are consistent with the recommendations made in the 1995 NIOSH Dust Criteria Document.

The proposed training requirements ensure that persons are adequately informed about the respirators that are available to them. In addition, the effectiveness of a respirator depends on the respirator wearer receiving proper training on use, fit, and care. Initial training would provide miners who must have respirators made available to them with general information about each type of respirator, as well as the proper care, fit, use and limitations of the equipment. Retraining under the proposal would be required only if the miner was not trained within the previous 12 months on the specific types of respirators made available. When required, retraining would reinforce the information and concepts provided in initial training. It would also serve to remind persons of the specific technical and functional limitations of the respiratory equipment available for use at the mine. As with each of MSHA's training standards, the Agency believes that providing proper instruction to miners serves to help them internalize information necessary to achieve optimum health protection from respirators, thereby reinforcing their commitment to helping to reduce health and safety risks to which they may be exposed.

The proposed training requirements would be performance-oriented and would allow for training to be tailored to each mine's individual circumstances and needs. For example, operators could develop a training module that not only includes the training topics required by proposed § 72.700(b), but also includes additional course content. Similarly, operators could choose to emphasize certain topics more than others based on the skills and knowledge assessment of their miners.

MSHA did not include the proposed training requirements under part 48 because part 48 already requires a considerable number of health and safety topics in which miners must receive training in a specified amount of time. For this reason, the proposal would require that this training be in addition to that required under part 48. MSHA believes requiring respirator training to be provided in a time period in addition to that required under part 48 would allow miners to receive adequate instruction on use of respirators in a comprehensive and focused manner. Although the time of training must be in addition to that required under part 48, operators may integrate this training into their part 48 training schedule. MSHA specifically solicits comments on the Agency's proposed approach to respirator training, including supporting rationale for suggested alternatives.

Proposed § 72.700(c) is new and would require operators to keep a record of the training provided under this provision. It would also require operators to maintain these records for at least two years following completion of the training, and would permit operators to store training records elsewhere if the records are immediately accessible from the mine site by electronic transmission, *e.g.,* by fax or computer.

The proposed two-year retention period provides MSHA with sufficient time within which the Agency can verify that miners have received the required training, while not being unduly burdensome on operators. MSHA solicits comment on the proposed record retention period. In addition, the proposal would allow for the convenience and efficiency of storing records at a central location, and accommodates the trend towards electronic record-keeping.

Proposed § 72.700(c) would also require operators to provide training records to an authorized representative

of the Secretary of Labor, Secretary of HHS, or miners' representative upon the request of such persons. This proposed requirement would be consistent with MSHA's other training standards.

C. Section 72.701 Respiratory Equipment; Gas, Dusts, Fumes, or Mists

Proposed § 72.701, redesignated from existing § 70.305, would expand the scope of the existing standard to all coal mines, whether underground or surface. The existing standard applies to underground coal mines and does not cover miners who work at surface mines or surface areas of underground coal mines. Gases, dusts, fumes and mists that may be detrimental to miners' health can be found at surface facilities as well as in underground mining environments. Respirators can play an important role in reducing miners' exposure to these gases, dusts, fumes and mists, and MSHA believes that the protections currently afforded to underground miners should extend to miners who work at surface facilities.

D. Section 72.800 Single, Full-shift Measurement of Respirable Coal Mine Dust

Proposed § 72.800 is new and would allow the use of either single, full-shift samples collected by either the Agency or operator to determine noncompliance with the respirable coal mine dust standards. MSHA believes that the proposed use of single, full-shift samples collected by the Agency or operator to determine noncompliance would eliminate an important source of sampling bias due to averaging [for a detailed description of this issue, see Appendix A of the 2000 single sample proposed rule (65 FR 42108, July 7, 2000).] Available at *http://www.msha.gov/regsinfo.htm.*

Under MSHA's existing standards and procedures, measurements made at the dustiest occupational locations or during the dustiest shifts sampled can be diluted by averaging them with measurements made under less dusty conditions. This practice has frequently resulted in MSHA not being able to require operators to take corrective actions to protect miners from the hazard of excessive respirable dust exposure. The existing regulatory framework based on averaging does not provide miners with an adequate level of protection from overexposure to respirable coal mine dust.

As was noted in the background section, in 1972, acting pursuant to the Coal Act, the Secretaries of the Interior and HEW made the joint finding in § 202(f), concluding that "single shift measurement of respirable dust will not, after applying valid statistical techniques to such measurement, accurately represent the atmospheric conditions to which the miner is continuously exposed" (Notice of Finding That a Single Shift Measurement of Respirable Dust Will Not Accurately Represent Atmospheric Conditions During Such Shift, 37 FR 3833 (February 23, 1972) (1972 Joint Finding)).

The proposed single sample provision is based on MSHA's experience, review of section 202(f) of the Mine Act, significant improvements in sampling technology, updated data, and comments and testimony on previous notices and proposals addressing the accuracy of single, full-shift sample measurements. This proposed rule would rescind the 1972 Joint Finding.

The proposed rule would allow the Agency to base determinations of noncompliance on single full-shift samples collected by the Agency or operator. The proposal is consistent with recommendations contained in both the 1995 NIOSH Criteria Document and the 1996 Dust Advisory Committee report. In the Criteria Document, NIOSH recommended the use of single, full-shift samples to compare worker exposures with its recommended exposure limit (REL) and concluded that this action is consistent with Section 202(f) of the Act. The Dust Advisory Committee recommended that MSHA change its compliance sampling program to allow the use of single full-shift samples for determining compliance; seven of nine Committee members affirmed this recommendation.

Sampling and analytical technology have progressed since the time the 1972 Joint Finding was issued. In 1995, NIOSH published an accuracy criterion that could be used to evaluate sampling and analytical methods for airborne contaminants (Kennedy *et al.* 1995). The accuracy criterion is that sampling and analytical methods need to produce results that fall within 25% of the true value 95 times out of 100. Various factors were included in the determination, such as the analytical recovery from the sampler, sampler capacity, storage stability of samples, and the effect of environmental factors on sampling results. NIOSH also included evaluation criteria for the experiments and details for the calculation of bias, precision, and accuracy. In 1996, the Secretary and Secretary of HHS proposed to apply this accuracy criterion (61 FR 10012) to determine whether a single, full-shift measurement of respirable coal mine dust would "accurately represent" the full-shift atmospheric dust concentration at the sampling location. They proposed this because the term "accurately represent," as used in section 202(f) of the Mine Act (30 U.S.C. 842(f)) in connection with a single shift measurement was not defined. Application of the NIOSH Accuracy Criterion to respirable coal dust sampling would require that measurements come within 25 percent of the corresponding true dust concentration at least 95 percent of the time.

The NIOSH Accuracy Criterion, widely recognized and accepted, has been the standard used by occupational health professionals to validate sampling and analytical methods for over 15 years. It is important that sampling and analytical methods generate reliable measurements of exposure for contaminants at or near the standard. Development of methods that meet the NIOSH Accuracy Criterion is critically important in order to produce reliable sampling and analytical methods.

OSHA frequently uses a similar accuracy criterion when issuing new or revised single substance standards. For example, OSHA's benzene standard provides: "[m]onitoring shall be accurate, to a confidence level of 95 percent, to within plus or minus 25 percent for airborne concentrations of benzene" (29 CFR 1910.1028(e)(6)). Similar wording can be found in the OSHA sampling and analytical methods for arsenic (29 CFR 1910.1018(e)(6)), lead (29 CFR 1910.1025(d)(9)), 1,2-dibromo-3-chloropropane (29 CFR 1910.1044(f)(6)), ethylene oxide (29 CFR 1910.1047(d)(6)), and formaldehyde (29 CFR 1910.1048(d)(5)).

For purposes of section 202(f) of the Mine Act (30 U.S.C. 842(f)), MSHA would consider a single, full-shift measurement to "accurately represent" atmospheric conditions at the sampling location, if the sampling and analytical method used meets the NIOSH Accuracy Criterion. Because MSHA would restrict the measurement objective to an individual shift and sampling location, the Agency has determined that environmental variability beyond what occurs at the sampling location on a single shift is not relevant to assessing measurement accuracy.

As previously noted in this preamble, the Secretary and the Secretary of HHS jointly published a **Federal Register** notice in July 2000 proposing (1) to rescind the 1972 Joint Notice of Finding and (2) a new mandatory standard stating a single, full-shift respirable dust measurement would accurately represent atmospheric conditions to

which a miner is exposed during such shift. In March 2003, the rulemaking record was reopened and the comment period was extended, and in August 2003, the comment period was extended indefinitely. Since the 2000 single sample proposal has been integrated into this proposed rule, the rulemaking records of the 2000 and 2003 single sample notices are incorporated into the rulemaking record for this proposal. The following discussion addresses comments made to 2000 and 2003 single sample notices.

Some commenters suggested that the dust concentration that should be measured is dust concentration averaged over a period greater than a single shift because Congress intended that the measurement objective be a long-term average. Specifically, some of these commenters stated that because coal dust exposure is related to chronic health effects, the exposure limit should be applied to dust concentrations averaged over a miner's lifetime. These commenters identified the measurement objective as being the dust concentration averaged over a long, but unspecified, term and stated that a single, full-shift measurement cannot accurately estimate this long-term average.

However, Section 202(b) of the Mine Act (30 U.S.C. 842(b)), explicitly requires that the average dust concentration be continuously maintained at or below the applicable standard during each shift. In *Consolidation Coal Company* v. *Secretary of Labor* 8 FMSHRC 890 (1986), aff'd 824 F.2d 1071 (DC Cir. 1987), the Federal Mine Safety and Health Review Commission found that each episode of a miner's overexposure to respirable dust significantly and substantially contributes to the health hazard of contracting chronic bronchitis or coal workers' pneumoconiosis, diseases of a fairly serious nature. Exposures during a single shift play a critical role in protecting miners' health, not just long term average exposures.

Commenters also stated that dust concentrations can vary during a shift due to changing conditions such as the height and slope of the seam. Also, dust concentrations are not uniform and may vary due to unpredictable, infrequent events, such as a "face blowout" (a violent expulsion of coal together with large quantities of coal dust or methane gas) or high winds at a surface mine. Commenters submitted evidence that dust concentrations can vary significantly near the mining face, and that these variations may extend into areas where miners are located. As a result, according to these commenters, the average dust concentration over a full shift is not identical at every point within a miner's work area.

MSHA recognizes that dust concentrations in the mine environment can vary from location to location, even within a small area near a miner. As mentioned earlier, the Mine Act does not specify the area that the measurement is supposed to represent; the sampler unit may be placed in any location reasonably calculated to determine excessive exposure to respirable dust. Commenters presented no evidence to demonstrate that short-term high exposures can overload a dust sampling filter or cause the sampling device to malfunction. The approved samplers are designed to measure the atmospheric conditions at a specific sampling location over a full shift.

Some commenters suggested that local factors such as dusty clothing could cause concentrations in the immediate vicinity of the sampler unit to be unrepresentative of a larger area. Commenters presented no evidence to demonstrate that dusty clothing can have a significant impact on sampling results obtained over a full shift. Moreover, respirable coal mine dust represents a hazard to the miner regardless of the source.

Several commenters suggested that the measurement objective should be a miner's "true exposure" or what the miner actually inhales. MSHA does not intend to use a single, full-shift measurement to estimate any miner's "true exposure," because no sampling device can exactly duplicate the particle inhalation and deposition characteristics of a miner at any work rate (these characteristics change with work rate), or at the various work rates occurring over the course of a shift. Limiting the respirable dust concentration at every location miners work or travel would ensure reduced exposures that would result in reduced health risks.

Some commenters suggested that MSHA continue to average at least five separate measurements prior to making a noncompliance determination. They stated that abandoning this practice would reduce the accuracy of noncompliance determinations. Several of these commenters maintained that the average of dust measurements obtained at the same occupational location on different shifts more accurately represents dust exposure to a miner than a single, full-shift measurement. They stated that not averaging measurements would reduce accuracy to unacceptable levels. Other commenters agreed with MSHA and NIOSH that the averaging of multiple samples can dilute and mask specific instances of overexposure. Some of these commenters stated that averaging not only distorts the estimate of dust concentration applicable to individual shifts, but also biases the estimate of exposure levels over a longer term. In addition, some commenters objected to MSHA's current policy of issuing citations only when the average of five dust samples exceeds the applicable dust standard. They noted that the averaging methodology used during MSHA sampling creates the potential to underestimate the exposure at one occupation, such as the DO, by diluting its measurement with the exposure measurements of other occupations, such as the non-designated occupations.

Consistent with NIOSH and the Dust Advisory Committee, MSHA believes that averaging multiple measurements can mask individual overexposures by diluting a high measurement at one location, or on one shift, with a lower concentration taken at another location, or on another shift. The Agency's existing regulatory framework of averaging measurements does not ensure that the concentration of respirable dust is maintained at or below the applicable standard during each shift, which is inconsistent with the statutory requirement that operators continuously maintain the average respirable dust exposure of each individual miner on each shift at or below the applicable respirable dust standard.

Some commenters stated that the NIOSH Accuracy Criterion did not conform to international standards adopted by the European Committee for Standardization (CEN) (European Standard No. EN 482, 1994). The current edition of this standard was updated in 2006. The NIOSH Accuracy Criterion not only conforms to the CEN criterion but is, in fact, more stringent than the CEN criterion. The CEN criterion requires that 95 percent of the measurements fall within ±30 percent of the true concentration, compared to ±25 percent under the NIOSH criterion. Also, EN 482 (2006) imposes no control over inaccuracy in the measurement of sampling and analytical accuracy itself. Any sampling and analytical method that meets the NIOSH Accuracy Criterion will also meet or exceed the CEN criterion in European Standard No. EN 482 (2006).

Some commenters suggested that method accuracy should be determined under actual mining conditions rather than in a laboratory or in a controlled environment. Although the NIOSH Accuracy Criterion does not require field testing, it recognizes that field

testing "does provide further test of the method." To avoid confusing real differences in dust concentration with measurement errors when testing is done in the field, "precautions may have to be taken to ensure that all samplers are exposed to the same concentrations" (Kennedy *et al.* 1995). Similarly, the CEN criterion for method accuracy specifies that testing of a procedure shall be carried out under laboratory conditions (European Standard No. EN 482, 2006).

One commenter opposed the application of the NIOSH Accuracy Criterion since the commenter believed it ignores environmental variability. MSHA proposes to restrict the measurement objective to an individual shift and sampling location. Therefore, environmental variability beyond what occurs at the sampling location on a single shift would not be relevant to assessing measurement accuracy.

MSHA has concluded that sufficient data exist for determining the uncertainty associated with a single, full-shift measurement; rigorous requirements are in place, as specified by existing standards, to ensure the validity of a respirable coal mine dust sample; and valid statistical techniques were used to determine that MSHA's improved dust sampling and analytical method meets the NIOSH Accuracy Criterion. In accordance with section 202(f) (30 U.S.C. 842(f)) and section 101 (30 U.S.C. 811) of the Mine Act, MSHA proposes to rescind the 1972 joint notice of finding.

30 CFR Part 75

A. Section 75.325 Air Quantity

The proposed rule would revise existing § 75.325(a)(2) by adding a new requirement that when the operator measures the quantity of air reaching the working face (production area or area where coal is extracted) and a blowing face ventilation system is used, the operator must take the air measurement with any machine-mounted dust collector system turned off.

MSHA existing standards for underground coal mines require adequate quantities of air in the working face to dilute, render harmless, and carry away flammable, explosive, noxious and harmful gases, dusts, smoke, and fumes. Therefore, before mining begins in a working face, operators are required to measure the amount of air coming into that area.

To ensure that the working face is ventilated with the amount of air required by the approved ventilation plan, existing § 75.325 specifies where the air quantity measurement at the face must be taken. Under the existing standard, operators using blowing ventilation in the working face are measuring the air quantity in that area after the continuous mining machine is moved into the area and the dust collector system on the machine is turned on. MSHA believes that this practice is not providing an accurate measurement of the air coming into the working face. When the dust collector system is turned on, it acts as a vacuum, pulling air from behind the line curtain, which results in a higher air quantity reading in the working face than the actual quantity of air reaching the area. The dust collector systems are supplemental control devices used primarily to assist in filtering and directing the dust through the systems and then exhausting clean air out the back of the systems. Maintaining the required quantity of air in the working face areas ensures that the dust collector systems operate efficiently. More importantly, it is essential to protecting miners' health.

Therefore, the proposed rule would require operators who use dust collector systems in conjunction with blowing face ventilation systems to determine the air quantity with the dust collector turned off. This proposed provision would assure that the operator gets a more accurate air quantity reading and therefore would provide better protection for the miners.

B. Section 75.332 Working Sections and Working Places

Proposed § 75.332(a)(1) would revise the existing standard to require that "each MMU" on each working section be ventilated by a separate split of air directed by overcasts, undercasts, or other permanent ventilation controls. It would retain the requirement that a separate split of air must ventilate each area where mechanized mining equipment is being installed or removed.

MSHA is proposing this change to address the situation where operators operate two sets of mechanized mining equipment on a working section ventilated by a single split of intake air, and mining activities from the upwind set of equipment expose miners working downwind to respirable dust and quartz. MSHA believes that, together, proposed § 75.332 and the proposed MMU definition, discussed elsewhere in the preamble related to proposed § 70.2, would improve miners' health by reducing their exposure to respirable dust.

C. Section 75.350 Belt Air Course Ventilation

The proposed rule would redesignate existing paragraph (b)(3)(i) as paragraphs (b)(3)(i)(A) and (b)(3)(i)(B). Proposed paragraph (b)(3)(i)(A) would retain the existing requirement that operators limit the average concentration of respirable dust in the belt air course, when used as a section intake airway, to 1.0 mg/m^3.

Proposed paragraph (b)(3)(i)(B) would reduce the respirable dust standard in a belt air course, when used as a section intake airway, from 1.0 mg/m^3 to 0.5 mg/m^3 on [date 6 months after the effective date of the final rule]. The proposed lower limit of 0.5 mg/m^3 is 50% of the proposed 1.0 mg/m^3 respirable dust standard in proposed § 70.100(a)(4), and is consistent with proposed §§ 70.100(b)(2) and 90.100(b). MSHA has included this conforming change in recognition of the Agency's regulatory history and policy with respect to areas of the mine where dust presents additional health risks. MSHA solicits comment on the proposed phase-in period for lowering the respirable dust limit and requests that a detailed rationale accompany any comment or recommendation that is submitted.

MSHA believes that when belt air is used as a source of intake air, the dust concentration in the belt air must be at or below 0.5 mg/m^3 to ensure that relatively clean air is used to ventilate the face.

MSHA is proposing a conforming change to existing paragraph (b)(3)(ii) which requires that the average concentration of respirable dust in the belt entry must be at or below the lowest applicable respirable dust standard on that section when miners on a working section are on a reduced standard below 1.0 mg/m^3. Proposed paragraph (b)(3)(ii) would replace "1.0 mg/m^3" with "that specified in 75.350(b)(3)(i)." The proposed revision would recognize that the belt air respirable dust standard would change from 1.0 mg/m^3 to 0.5 mg/m^3 after a six-month phase-in period.

D. Section 75.362 On-shift Examinations

Proposed § 75.362(a)(2) would add a new requirement that the person conducting the on-shift examination must record the results and corrective actions taken to assure compliance with respirable dust control parameters in the approved mine ventilation plan. The proposal focuses attention on the need for properly functioning dust controls and would greatly improve the level of

health protection for underground coal miners. A record of the results of all dust control parameters and any corrective action taken would assist the Agency and operators in evaluating dust control parameters and assist in determining whether the parameters specified in the mine ventilation plan continue to be effective in controlling respirable dust. Proposed paragraph (a)(2) is consistent with the Dust Advisory Committee's unanimous recommendation that operators should record the results of on-shift examinations.

Proposed § 75.362(a)(2) would also add a new requirement that the on-shift examination of dust control parameters include specific measurements like roof bolter dust collector vacuum levels, scrubber air flow rate, and work practices required in the mine ventilation plan. Conducting examinations of these dust control measures and recording the results offers additional protection for miners because the information would provide early warning of deteriorating dust controls, allowing corrective action to be taken before dust controls fail to protect miners from excessive dust levels. This proposed revision would also assist operators in evaluating whether they are meeting the requirements of the approved dust control parameters in the ventilation plan so that they can effectively determine whether the parameters are sufficient to control miners' respirable dust exposure.

Proposed paragraph (a)(2) is consistent with the Dust Advisory Committee's unanimous recommendation that MSHA should examine all recorded operational data and information on miner exposure and dust control measures as part of the on-going and six-month review of the ventilation plan in order to evaluate the continued effectiveness of the plan. With the new proposed requirements, MSHA will be able to review and evaluate additional information on dust control measures as part of the Agency's review of the ventilation plan.

The proposed rule would revise § 75.362(g)(2) by renumbering and adding new paragraphs (g)(2)(i)–(ii), (3), and (4). Proposed paragraph (g)(2) would make non-substantive changes to existing paragraph (g)(2) and would retain the existing requirement that the certified person directing the on-shift examination assure compliance with the respirable dust control parameters specified in the approved mine ventilation plan. Proposed paragraph (g)(2)(i) is new and would include requirements from existing paragraph (g)(2) that the certified person must certify by initials, date, and time that the on-shift examination was conducted and would include a new requirement that the certification be placed on a board maintained at the section load-out or similar location showing that the examination was made prior to resuming production. The certification requirements would provide assurance that the examinations were made. Posting of the certification on a board at the section load-out or similar location would permit miners on the section to confirm easily that the required examination was made in a timely manner.

Proposed paragraph (g)(2)(ii) is new and would require that the certified person directing the examination verify, by initials and date, the record of the examination results no later than the end of the shift. Under new proposed paragraph (g)(3), this record of examination results would be required to be countersigned by the mine foreman or equivalent mine official by the end of the foreman's or mine official's next regularly scheduled work shift.

The proposal would require that the on-shift examination record contain (1) The results of the examination to assure compliance with the ventilation plan; (2) verification by the certified person of the record of the results of the examination; and (3) countersigning of the record by the mine foreman or equivalent mine official.

MSHA has added the proposed new requirement that the certified person directing the on-shift examination verify the examination results and that the mine foreman or equivalent mine official countersign the record to assure that a qualified official evaluates the effectiveness of the dust control parameters and that a knowledgeable supervisory official receives the necessary notification of the on-shift examination results. MSHA believes that the proposed requirement would ensure that a person with authority is informed and can implement any necessary changes to dust control parameters to maintain compliance with applicable respirable dust standards.

Proposed paragraph (g)(3) would also add a new requirement that the on-shift examination record must be made in a secure book that is not susceptible to alteration, or recorded electronically in a secure computer system that is not susceptible to alteration. MSHA believes that a record of the results of the examination of all dust control parameters and corrective actions would provide a history of the conditions documented at the mine and would alert miners and mine management to recurring problems, to conditions that need to be corrected and to those corrective actions taken. The proposal would allow records to be kept in the traditional manner in a secure book, and it would accommodate new technology by allowing the record to be kept electronically in a secure manner. Based on MSHA's longstanding history with other safety and health records, the Agency believes that records should be maintained so that they cannot be altered. In addition, electronic storage of information and accessing it through computers is increasingly a common business practice in the mining industry. The proposal would permit the use of electronically stored records provided they are secure, not susceptible to alteration, able to capture the information and signatures required, and are accessible to the representative of the coal miners and MSHA. MSHA believes that electronic records meeting these criteria are practical and as reliable as traditional records. MSHA also believes that once records are properly completed and reviewed, mine management can use them to evaluate whether dust control parameters are adequate or need appropriate adjustments; whether the same conditions or problems, if any, are recurring; and whether corrective measures are effective.

Proposed paragraph (g)(3) is consistent with the Dust Advisory Committee's unanimous recommendation that operators should conduct periodic reviews of the adequacy of the dust control parameters stipulated in the mine ventilation plan and make modifications necessary to achieve and maintain compliance with the applicable dust standard.

Proposed paragraph (g)(4) is new and would require that the records be retained at a surface location at the mine for at least 1 year and be made available for inspection by authorized representatives of the Secretary and the representatives of miners. This proposed requirement is consistent with recordkeeping provisions in other MSHA standards and would assure that examination results are maintained for a period of time to allow for MSHA's evaluation during several inspections and are accessible to the representative of the miners.

Proposed paragraph (g)(4) is consistent with the Dust Advisory Committee's unanimous recommendation that recordkeeping be required as a part of on-shift examinations under § 75.362. The Committee explained that the results of the on-shift examinations were

informative and should be recorded and shared with workers who have been properly trained concerning their interpretation and importance. Furthermore, the Committee unanimously recommended that MSHA inspections should include: A review of recorded parameter data; dust control measures observed in operation; and input from miners regarding whether the dust controls and coal production are representative of usual operations.

E. Section 75.371 Mine Ventilation Plan: Contents

Proposed § 75.371(f), (j) and (t) would revise the information that operators would be required to provide in mine ventilation plans.

Proposed paragraph (f) would add a new requirement to include the minimum quantity of air that would be delivered to the working section for each mechanized mining unit. It would also add a new requirement that the description of each different dust suppression system used on equipment on each working section be identified by make and model. The proposed rule would add new requirements in paragraphs (f)(1) through (f)(4) to include in plans the following information related to each section: (1) The number, types, location, orientation, operating pressure, and flow rate of operating water sprays; (2) the maximum distance that ventilation control devices will be installed from each working face when mining or installing roof bolts in entries and crosscuts; (3) procedures for maintaining the roof bolter dust collection system, if used, in approved condition; and (4) recommended best work practices for equipment operators to minimize dust exposure.

Proposed paragraph (j) would be revised to add a new requirement that the type and size of dust collector screens used and a description of the procedures to be followed in properly maintaining dust collectors used on equipment be included in the ventilation plan.

The proposed revisions are consistent with the 1992 Report of the Coal Mine Respirable Dust Task Group, which identified insufficient detail and specificity as a major factor that can adversely affect the quality of dust control plans. Proposed paragraphs (f)(1) through (f)(3) are also consistent with the recommendations of a recent targeted enforcement initiative conducted by MSHA's Respirable Dust Emphasis Teams, which focused on miners' exposures to respirable coal mine dust at selected underground coal mines as part of the Agency's Comprehensive Initiative to End Black Lung—Act Now! MSHA determined that due to ambiguities in ventilation plans, miners had trouble determining the types of dust controls to use and how to evaluate their effectiveness. After reviewing results from this initiative, MSHA stated that operators should include in their plans: The type of water sprays and water volume at the minimum pressure to be used; orifice size; spray pattern; location where each type of spray will be used; and minimum number of sprays that will be maintained. Recommendations also included the location of curtains where roof bolting is being performed since the distance from the face is important in the effectiveness of ventilation. Guidance was provided to mine operators on the proper maintenance of roof bolter dust collectors.

In the 2003 plan verification proposed rule, MSHA proposed revisions to § 75.371 to require operators to include any specific work practices used to minimize the dust exposure of individual miners, along with information on the location of the roof bolter during the mining cycle for each continuous miner section, and the cut sequence for each longwall mining section in the ventilation plan. Some commenters on the proposal stated that more dust control parameters and information should be contained in plans. In response to comments and consistent with the Agency's findings in its ongoing Dust Emphasis Program, the proposal would require that ventilation plans include more information and specificity on dust suppression systems used and best work practices used by equipment operators to minimize dust exposure. The additional information that MSHA proposes to include in the ventilation plan would allow both operators and MSHA to observe and measure specific dust control parameters to better evaluate the effectiveness of the dust control systems. This would result in greater protection to miners from hazards of respirable dust. In addition, if a respirable dust standard were exceeded, the operator and MSHA would be in a better position to determine why (*e.g.,* whether the plan was not followed or it was inadequate).

Another commenter on the 2003 plan verification proposal stated that operators must have flexibility to adjust ventilation and water pressure in order to meet the specific conditions of the mine.

MSHA does not intend to limit the operator's ability to make appropriate adjustments to mine ventilation and dust suppression systems for MMUs. MSHA recognizes that ventilation and dust suppression systems necessary to control respirable dust must be based on the conditions of the mine.

Proposed § 75.371(t) would include a nonsubstantive change to replace a parenthetical reference to existing § 70.208 with proposed § 70.209, because § 70.208 has been redesignated as § 70.209 in the proposed rule.

30 CFR Part 90

A. Section 90.1 Scope

Proposed § 90.1 would be revised to include surface coal miners and to make a conforming change. The proposal would extend to all coal miners who have evidence of the development of pneumoconiosis the option to work in an area of a mine where the average concentration of respirable dust in the mine atmosphere during each shift is continuously maintained at or below the applicable standard. Surface coal miners are at risk of developing pneumoconiosis as a result of exposure to respirable coal mine dust. Chest x-ray examinations enable early detection of pneumoconiosis, which is irreversible and, if exposure continues, progressive. In the absence of medical monitoring and intervention, a miner may continue to be exposed, allowing the disease to progress so that the miner may suffer material impairment of health or functional capacity.

The proposal would also make a conforming change that would revise the existing standard to require mine operators to continuously maintain the average concentration of respirable dust to which the part 90 miner would be exposed at or below "the applicable standard" as specified in proposed § 90.100. The proposed language, "the applicable standard," would replace the existing language, "1.0 milligrams per cubic meter of air." This conforming change would be necessary because the Agency is proposing to phase in a lower respirable dust standard, from 1.0 mg/m^3 to 0.5 mg/m^3, in proposed § 90.100 on [date six months after the effective date of the final rule].

B. Section 90.2 Definitions

The proposed definitions of approved sampling device, CMDPSU, CPDM, equivalent concentration, MMU, quartz, weekly accumulated exposure, and weekly permissible accumulated exposure, are the same as proposed part 70 definitions discussed elsewhere in the preamble related to proposed § 70.2.

Part 90 Miner

The proposed rule would amend the existing definition of *part 90 miner* to

state it applies to a miner employed at "a coal mine." This proposed revision would conform with proposed § 90.3, which extends part 90 protections to surface miners. Proposed § 90.3 is discussed elsewhere in the preamble.

The proposal would also make a conforming change to replace "1.0 mg/m³" with "the applicable standard." The change would reflect that the respirable dust standard would change from 1.0 mg/m³ to 0.5 mg/m³ after a six-month phase-in period. Other minor nonsubstantive changes would be made.

Representative Samples

The proposal would add a new definition for *representative samples.* It would be defined as respirable dust samples that reflect typical dust concentration levels in the working environment of the part 90 miner when the miner is performing normal work duties.

MSHA would consider that "typical dust concentration levels" are present during sampling if they approximate and are characteristic of the part 90 miner's dust concentration levels during periods of non-sampling. Under the proposed rule, samples must be taken while the part 90 miner is engaged in normal work duties, as that term is defined in existing § 90.2. Samples taken when the part 90 miner performs an atypical task, or other activity that does not mirror duties performed on a routine day-to-day basis in the part 90 miner's job classification at the mine would not be considered representative samples for the part 90 miner.

The proposed definition would be added to ensure that operators conduct dust sampling when working conditions accurately represent miners' dust exposures. This would allow operators and MSHA to more effectively evaluate the performance of dust controls and the adequacy and effectiveness of operators' approved plans.

C. Section 90.3 Part 90 Option; Notice of Eligibility; Exercise of Option

For the same reason stated in proposed § 90.1, proposed § 90.3(a) would be revised to extend to surface coal miners the option to work in an area of a mine where the average concentration of respirable dust in the mine atmosphere during each shift is continuously maintained at or below "the applicable standard" as specified in proposed § 90.100, which is discussed elsewhere in the preamble. The proposal would also include a conforming change. The proposed language, "the applicable standard," would replace the existing language, "1.0 milligrams per cubic meter of air" to reflect that the respirable dust standard would change from 1.0 mg/m³ to 0.5 mg/m³ after a six-month phase-in period.

The proposal would make conforming changes to proposed § 90.3(d) and (e) to extend the part 90 transfer option to surface coal miners.

D. Section 90.100 Respirable Dust Standard

Proposed § 90.100 would reduce the respirable dust standard from 1.0 mg/m³ to 0.5 mg/m³ for part 90 miners on [date six months after the effective date of the final rule]. The proposed lower limit of 0.5 mg/m³ is 50% of the proposed 1.0 mg/m³ respirable dust standard in proposed § 70.100(a)(4) and 71.100(d), and consistent with § 70.100(b)(2). MSHA has included this conforming change to prevent the progression of pneumoconiosis. Miners with evidence of pneumoconiosis have a higher risk of advancing to a more serious condition than do other miners if they continue to be exposed to dust (Antao, VC *et al.,* 2005; Lee, HS et al., 2001; Castranova, V and Vallyathan, V, 2000; Heppleston, AG, 1988; Ashford, JR, *et al.,* 1965). MSHA's QRA shows that, at a standard of 1.0 mg/m³, there is a residual risk to miners. Reducing the concentration limit for part 90 miners continues the Agency's regulatory program for providing necessary protection for these miners. MSHA solicits comment on the proposed phase-in period for lowering the respirable dust limit and requests that a detailed rationale accompany any comment or recommendation that is submitted.

E. Section 90.101 Respirable Dust Standard When Quartz is Present

The proposed rule would revise the respirable dust standard for part 90 miners when quartz is present in coal mines. The rationale for revising § 90.101 is identical to proposed § 70.101, discussed elsewhere in this preamble, however, the language in proposed § 90.101(b) has been tailored to apply to part 90 miners.

F. Section 90.102 Transfer; Notice

The proposed rule would revise existing § 90.102(a) to include an exception to the part 90 miner transfer requirements. Under the existing standard, an operator must transfer the miner to an existing position at the same coal mine on the same shift or shift rotation on which the miner was employed immediately before the transfer. Under the proposed rule, transfer requirements would not apply when a part 90 miner is working in an area that meets the applicable part 90 respirable dust standard, but circumstances such as reductions in workforce or changes in operational methods require a change in the miner's job or shift assignment. The proposed exception would accommodate the need for operators to reassign part 90 miners when unforeseen circumstances and unexpected mine conditions arise. MSHA believes that the proposed exception provides operators some necessary flexibility with respect to the assignment of a part 90 miner. The proposed rule would retain the provision that the operator may transfer a part 90 miner to a different coal mine, a newly-created position, or a position on a different shift or shift rotation if the miner agrees in writing to the transfer. Proposed § 90.102(a) is consistent with the Agency's policy and is identical to the 2003 proposed Plan Verification rule. The Agency received no comments specific to these provisions.

G. Section 90.103 Compensation

Proposed § 90.103(c) is new and would provide that the existing provisions in §§ 90.103(a) and (b), concerning compensation for a part 90 miner, do not apply when a part 90 miner initiates and accepts a change in work assignment for reasons of job preference. This proposed provision is consistent with MSHA's longstanding policy of not applying the part 90 miner compensation provisions under circumstances where, once a miner has been placed in a position that complies with the provisions in part 90, the part 90 miner on his own initiative applies for and accepts another job in a work area with an average respirable dust concentration at or below the applicable part 90 respirable dust standard.

The proposal is also consistent with Section 101(a)(7) of the Mine Act which provides for compensation at the same rate of pay for miners transferred as a result of exposure to respirable dust, but not as a result of a miner-initiated transfer based on job preference. As an example: A miner exercised the part 90 option when the miner's job paid $20 per hour. If the operator keeps the part 90 miner in the same work position because compliance with the applicable part 90 respirable dust standard is maintained, or if the operator transfers the miner to a new work position to achieve compliance with part 90, the miner cannot be paid less than $20 per hour—the amount paid immediately before exercising the option. However, once the operator has placed the miner in a position that complies with the provisions of part 90, if the miner prefers a different job and initiates and accepts a job change that only pays $17

per hour, the miner would receive $17 per hour in the new position.

Under the proposal, a miner-initiated job change to a position that is at or below the part 90 respirable dust standard would not constitute a waiver of part 90 rights. In the new job, the miner would retain part 90 status and all other requirements of part 90 continue in effect, including the operator's obligations to continuously maintain the part 90 respirable dust standard and to give MSHA notice whenever the miner's work assignment changes or lasts longer than one shift. Proposed § 90.103(c) is identical to the 2003 proposal on Plan Verification. The Agency did not receive any comments specific to these provisions.

The proposed rule would redesignate: existing § 90.103(c) as proposed § 90.103(d); existing § 90.103(d) as proposed § 90.103(e); existing § 90.103(e) as proposed § 90.103(f); and existing § 90.103(f) as proposed § 90.103(g.) No other changes are proposed for these provisions.

H. Section 90.104 Waiver of Rights; Re-exercise of Option

Proposed § 90.104(a)(2) and (a)(3) would revise the existing requirements to include conforming changes to part 90 on the respirable dust standard and respirable dust standard when quartz is present. Proposed paragraphs (a)(2) and (a)(3) would replace both the "1.0 milligrams per cubic meter of air" and "the respirable dust standard established by § 90.101 (Respirable dust standard when quartz is present)" with the term "applicable standard." MSHA proposed identical revisions in 2003 under the proposed rule on Plan Verification and received no comments on the proposal.

I. Section 90.201 Sampling; General and Technical Requirements

The proposed rule would revise operator sampling requirements in existing § 90.201 and would phase in the use of CPDMs to collect respirable dust samples in the working environment of each part 90 miner.

Under the proposed rule, § 90.201(a) would require the operator to use the CMDPSU to take respirable dust samples in the working environment of each part 90 miner until replaced by the CPDM. On [date 12 months after the effective date of the final rule], operators would be required to replace the CMDPSU with the CPDM to sample part 90 miners, unless notified by the Secretary. The operator would be allowed to start using the CPDM anytime during the 12-month phase-in period. Proposed § 90.201(a) is consistent with proposed § 70.201(a); however, the language in proposed § 90.201(a) would be tailored to apply to part 90 miners. The rationale for the proposed provision is the same as that in proposed § 70.201(a), which is discussed elsewhere in the preamble.

Proposed paragraph (b) would retain the existing requirement that sampling devices be worn or carried directly to and from each part 90 miner's position. It would revise the existing standard to require that a CPDM be worn at all times if it is used for sampling. It would also revise the existing standard to require that sampling devices be operated portal to portal, and be operational during the part 90 miner's entire shift, even when the shift exceeds 8 hours (extended shift). This would include the time spent performing normal work duties and while traveling to and from the assigned work location. Proposed § 90.201(b) is consistent with proposed § 70.201(e); however, the language in proposed § 90.201(b) would be tailored to apply to part 90 miners. The rationale for the proposed provision is the same as that in proposed § 70.201(e), which is discussed elsewhere in the preamble.

Proposed paragraph (b)(1) is new and would address work shifts longer than 12 hours. It would require that when using a CMPDSU and the work shift to be sampled is longer than 12 hours, the operator would have to switch-out the unit's sampling pump prior to the 13th hour of operation. Proposed § 90.201(b)(1) is the same as proposed § 70.201(e)(1). Proposed paragraph (b)(2) is new and would add a similar requirement to address work shifts longer than 12 hours when operators use CPDMs. It would require the operator to switch-out the CPDM with a fully charged device prior to the 13th-hour of operation. Proposed paragraph (b)(2) is the same as proposed § 70.201(e)(2). The rationale for proposed § 90.201(b)(1) and (b)(2) is discussed elsewhere in the preamble related to proposed § 70.201(e)(1) and (e)(2).

Proposed paragraphs (c)(1) through (c)(3), redesignated from existing (f)(1) through (f)(3) retain the existing requirements.

Proposed paragraphs (d)(1) through (d)(4) are new and would require: the mine operator to use one control filter for each shift of sampling when a CMDPSU is used; each control filter to have the same pre-weight date (noted on the dust data card) as the filters used for sampling; each control filter to remain plugged at all times; each control filter to be exposed to the same time, temperature, and handling conditions as the filter used for sampling, and that each control filter be kept together with the exposed samples after sampling. Proposed § 90.201(d)(1) through (d)(4) are identical to proposed § 70.201(f)(1) through (f)(4) and the rationale is discussed elsewhere in the preamble related to proposed § 70.201(f).

Proposed paragraph (e) would make a minor revision to the existing standard to clarify that it would apply when a CMDPSU is used to take respirable dust samples.

The proposed rule would revise and move existing § 90.201(d) to proposed § 90.208(e), which would apply to operators who use a CMDPSU for sampling the work environment of part 90 miners. Proposed § 90.208(e) is discussed elsewhere in the preamble.

Proposed paragraph (f) is new and would require the operator to make a record showing the length of each shift for each part 90 miner, retain the records for at least six months, and make them available for inspection by authorized representatives of the Secretary or submitted to the District Manager when requested in writing. Operators would need to know the length of the work shift to determine the equivalent concentration. MSHA would use these records to verify that operators are accurately recording the normal work shift lengths so that miners are not being overexposed.

Proposed paragraph (g), redesignated from existing paragraph (c), would be revised to require that, upon request from the District Manager, the operator would submit the date and time any respirable dust sampling would begin. This information would have to be submitted to the District Manager at least 48 hours prior to scheduled sampling. The proposed 48-hour notification requirement would provide the Agency the opportunity to observe and monitor operator sampling which would ensure that both operating conditions and sampling requirements are met.

Proposed paragraph (h) is new and would require mine operators using CPDMs to provide training to all part 90 miners. Proposed § 90.201(h) is the same as proposed § 70.201(j) and the rationale is discussed elsewhere in the preamble related to proposed § 70.201(j). In addition, proposed (h)(1)–(5), which are identical to proposed § 70.201(j)(1)–(5), would establish the CPDM training that would be required. The rationale, discussed elsewhere in the preamble, is the same for both.

Proposed paragraph (i) is new and would require mine operators to maintain a record of training at the mine site for two years following completion of training. MSHA believes it is important to retain these records to

verify that the required training has been provided. Proposed paragraph (i) would also permit a mine operator to maintain the record at another location as long as the record could be immediately accessed electronically from the mine site. Finally, proposed paragraph (i) would require that upon request by an authorized representative of the Secretary or Secretary of HHS, the mine operator would be required to promptly provide access to any such training record. Proposed § 90.201(i) is the same as proposed § 70.201(k), except tailored for part 90 miners, and the rationale is discussed elsewhere in the preamble related to proposed § 70.201(k).

J. Section 90.202 Certified Person; Sampling and § 90.203 Certified Person; Maintenance and Calibration

Proposed §§ 90.202 and 90.203 would be identical to proposed §§ 70.202 and 70.203, discussed elsewhere in this preamble.

K. Section 90.204 Approved Sampling Devices; Maintenance and Calibration

Proposed § 90.204 would be identical to proposed § 70.204, discussed elsewhere in this preamble.

L. Section 90.205 Approved Sampling Devices; Operation; Air Flowrate

Proposed § 90.205 would be identical to proposed § 70.205, discussed elsewhere in this preamble.

M. Section 90.206 CPDM Performance Plan

Proposed § 90.206 would be identical to proposed § 70.206, discussed elsewhere in this preamble, with a few exceptions. Proposed § 90.206(c)(1) would require the CPDM Performance Plan to include the specific part 90 miner who will be sampled, identified by the unique 8-digit MSHA Individual Identification Number (MIIN) obtained from the Agency.

Also, unlike §§ 70.206(a)(1)–(a)(2) and (a)(4) and 71.206(a)(1)–(a)(2) and (a)(4), proposed § 90.206(a) would not include requirements that miners' representatives be notified of proposed Plans or plan revisions for any part 90 miner, be given copies of plans or plan revisions for affected part 90 miners, or be allowed to submit comments on such plans or revisions to the District Manager. Similarly, proposed § 90.206 does not include requirements in proposed §§ 70.206(a)(3) and (c)(3), and 71.206(a)(3) and (c)(3), that would require proposed and approved Plans or revisions to be posted on the mine bulletin board. Instead, proposed §§ 90.206(d) would require a copy of the approved Plan for the part 90 miner or revisions be provided to the affected part 90 miner. It would also prohibit the posting of the approved Plan or revisions on the mine bulletin board. MSHA believes that the proposed provisions and proposed prohibition against posting approved Plans or revisions on the bulletin board are consistent with existing requirements and would help to prevent the unwarranted disclosure of a part 90 miner's identity.

N. Section 90.207 Exercise of Option or Transfer Sampling

Proposed § 90.207 would remain essentially unchanged from the existing standard since only nonsubstantive changes are proposed.

The proposal would change the title to distinguish it from compliance sampling under proposed § 90.208.

The proposed language in paragraph (a)(2), "the applicable standard," would replace the existing language, "1.0 milligrams per cubic meter of air or the respirable dust standard established by § 90.101 (Respirable dust standard when quartz is present)." This proposed revision reflects that the respirable dust standard would change from 1.0 mg/m^3 to 0.5 mg/m^3 on [date 6 months after the effective date of the final rule] and that a reduced standard could apply due to the presence of quartz.

Other minor editorial changes would be made.

O. Section 90.208 Compliance Sampling; Procedures for Sampling With CMDPSUs

Proposed § 90.208 would revise the existing sampling requirements for part 90 miners. The proposal would change the title to distinguish it from proposed § 90.209, which would apply to operators who use a CPDM to sample part 90 miners.

Proposed § 90.208(a) would revise existing § 90.208 and require operators who use CMDPSUs to take five valid representative samples during each quarterly period from the environment of the part 90 miner while performing normal work duties. The quarterly periods would be: (1) January 1–March 31; (2) April 1–June 30; (3) July 1–September 30; and (4) October 1–December 31. The proposal would also require that the samples be collected on consecutive work days. The proposed rule would replace the bimonthly sampling period under the existing standard with a quarterly sampling period. Also, the proposal would increase sampling from one sample during a bimonthly period under the existing standard to five samples collected on consecutive work days during a quarterly period. Sampling part 90 miners during five consecutive work days on a quarterly basis would provide a better representation of typical dust conditions to which part 90 miners are exposed and, therefore, would provide greater protection for miners.

In addition, proposed paragraph (a) would require that the samples be "representative samples" and would no longer include the term "respirable dust samples." The term representative samples is new and is discussed elsewhere in the preamble in § 90.2 related to definitions. The proposed change to include representative samples would offer greater protection for miners.

Proposed § 90.208(b), (b)(1), and (b)(2) would apply when the respirable dust standard under § 90.101 has been changed due to the presence of quartz. Proposed § 90.208(b) is new and would require that when the applicable dust standard is changed in accordance with proposed § 90.101 (Respirable dust standard when quartz is present), the new applicable standard would be effective on the first shift on which the part 90 miner is performing normal work duties following receipt of the notification of such change from MSHA. Proposed § 90.208(b)(1) is derived from existing § 90.208(b). Under the proposal, if all samples from the most recent quarterly sampling period do not exceed the new applicable standard, the operator would begin sampling of the part 90 miner on the first shift on which the miner is performing normal work duties during the next quarterly period following notification from MSHA of the change in the applicable standard. Proposed paragraph (b)(2) is new and would require that if any sample from the most recent quarterly sampling period exceeds the new applicable standard, the operator must make necessary adjustments to the dust control parameters within three days and collect samples from the affected part 90 miner on consecutive work days until five valid representative samples are collected. The collected samples would be treated as normal quarterly samples. Proposed § 90.208(b), (b)(1), and (b)(2) are consistent with proposed § 70.207(c), (c)(1), and (c)(2). The rationale for proposed § 90.208(b), (b)(1), and (b)(2) is the same as that for § 70.207(c), (c)(1), and (c)(2), which is discussed elsewhere in the preamble.

Proposed § 90.208(c) is new and would require that no valid single-shift equivalent concentration shall meet or exceed the ECV that corresponds to the applicable standard. The ECVs are listed in Table 90–1. Proposed § 90.208(c) is

consistent with proposed § 70.207(e). A discussion on the proposed use of ECVs and rationale is addressed elsewhere in the preamble under proposed § 70.207(e).

The proposed rule would redesignate existing § 90.208(c) as proposed § 90.208(d). Proposed § 90.208(d) would require that upon issuance of a citation for a violation of the applicable standard, paragraphs (a) (quarterly sampling) and (b)(2) (sampling when a respirable dust standard is changed due to quartz) would not apply to the part 90 miner until the violation is abated in accordance with proposed paragraph (e). Proposed § 90.208(d) is consistent with proposed § 70.207(f). The rationale is the same as that for proposed § 70.207(f) discussed elsewhere in the preamble. The proposal would make conforming, nonsubstantive revisions to the existing standard. Proposed § 90.208(d) would replace "§ 90.100 (Respirable dust standard) or § 90.101 (Respirable dust standard when quartz is present)" with "the applicable standard" to be consistent with other proposed part 70, 71, and 90 provisions. The proposal would also replace "§ 90.201(d)" with "paragraph (e)" since proposed § 90.208(e) would address the operators' requirements to abate violations of the respirable dust standard for part 90 miners.

Proposed § 90.208(e), derived from existing § 90.201(d), would require the operator to take the following actions during the time for abatement fixed in a citation for violation of the applicable standard. Proposed paragraph (e)(1) would require the operator to make respirators available to the affected part 90 miner in accordance with proposed § 72.700. Proposed paragraph (e)(2) would require the operator to submit, to the District Manager for approval, proposed corrective actions to lower the concentration of respirable dust to within the applicable standard. If the corrective action involves reducing the respirable dust levels in the work environment of the part 90 miner, proposed paragraph (e)(2) would require the operator to implement the proposed corrective actions after receipt of approval by the District Manager, and then sample the affected part 90 miner until five valid representative samples are taken.

If the corrective action taken by the operator involves transferring the part 90 miner to another work position in the mine to meet the applicable standard, proposed paragraph (e)(2)(ii) would require the operator to comply with proposed § 90.102 and then sample the affected miner in accordance with proposed § 90.207(a). Proposed § 90.208(e)(1) and (e)(2)(i) are consistent with proposed §§ 70.207(g)(1)–(g)(3) and 70.209(e)(1)–(e)(3). The rationale for proposed § 90.208(e)(1) and (e)(2)(i) is identical to that in proposed § 70.207(g), which discussed elsewhere in this preamble. Proposed § 90.208(e)(2)(ii) would clarify that other part 90 requirements apply when the applicable standard for a part 90 miner is exceeded and the operator transfers a part 90 miner to meet the standard.

Proposed § 90.208(f), derived from existing § 90.300(a), is new and would establish that a citation for violation of an applicable standard will be terminated by MSHA when: (1) the equivalent concentration of each of the five valid operator abatement samples is at or below the applicable standard; and (2) the operator submits a proposed dust control plan for the part 90 miner or proposed changes to the approved dust control plan as prescribed in proposed § 90.300 to the District Manager for approval within 15 calendar days after sampling results are received from MSHA indicating the concentration has been reduced to or below the applicable standard. The proposal also requires that the revised parameters must reflect the control measures used to maintain the concentration of respirable dust to or below the applicable standard. The proposed provision is consistent with proposed §§ 70.207(h) and 71.207(l). MSHA believes that this proposal would assure that dust control parameters in the approved dust control plan for that part 90 miner are appropriate and demonstrate that they effectively reduce the miner's respirable dust exposure.

Proposed § 90.208(g) is new and would require that when the equivalent concentration of one or more valid samples collected by the operator under this section exceeds the applicable standard but is less than the ECV that corresponds to the applicable standard in Table 90–1, the operator would be required to: (1) Make approved respirators available to affected miners in accordance with proposed § 72.700; (2) take corrective action to lower the respirable dust concentration to or below the applicable standard; and (3) record the corrective actions taken in the same manner as the records for hazardous conditions required by existing § 75.363. This proposed provision and its rationale are identical to proposed § 70.207(i).

P. Section 90.209 Compliance Sampling; Procedures for Sampling With CPDMs

Proposed § 90.209 is new and would provide requirements on sampling the working environment of part 90 miners when using a CPDM. It addresses: frequency of sampling; actions to be taken when any end-of-shift concentration exceeds the applicable standard; actions to be taken when overexposures occur; and requirements when transferring a part 90 miner as part of the operator's corrective actions.

Proposed § 90.209(a) would require operators who use CPDMs to sample the working environment of the part 90 miner during each shift, 7 days per week (Sunday through Saturday), 52 weeks per year. The proposal is consistent with proposed § 70.208(a)(1). MSHA believes that continuous monitoring of part 90 miners on every shift during the year is the most effective method of reducing their exposure to respirable coal mine dust and preventing any further progression of black lung disease. Both operators and part 90 miners would be aware continually of the dust conditions in the working environment and the effectiveness of dust controls.

Proposed § 90.209(b) would require that when the applicable dust standard is changed in accordance with proposed § 90.101 (Respirable dust standard when quartz is present), the new applicable standard would become effective on the first shift that the part 90 miner is performing normal work duties following receipt of the notification of the change from MSHA. Proposed § 90.209(b) is identical to proposed § 90.208(b) and consistent with proposed §§ 70.207(c) and 70.208(c). The proposal would protect part 90 miners by ensuring prompt implementation of the reduced standard when there is high quartz exposure. The proposed provision is consistent with Agency policy and would provide increased health protection for part 90 miners.

Proposed § 90.209(c) would require that for operators who use a CPDM, no valid end-of-shift equivalent concentration shall meet or exceed the ECV that corresponds to the applicable standard. The ECVs are listed in Table 90–2. Proposed § 90.209(c) is consistent with proposed §§ 70.207(e) and 70.208(d). As discussed elsewhere in the preamble under proposed §§ 70.207(e) and 70.208(d), and in Appendix A, ECVs are calculated to ensure that citations are issued only when a single sample measurement demonstrates, with at least 95-percent confidence, that the applicable dust standard has been exceeded. The rationale for proposed § 90.209(c) is the same as that in proposed § 70.207(e), which is discussed elsewhere in the preamble.

Proposed § 90.209(d) would require that no weekly accumulated exposure (WAE) shall exceed the weekly permissible accumulated exposure (WPAE). The proposed terms "weekly accumulated exposure" and "weekly permissible accumulated exposure" are new and discussed elsewhere in the preamble under the § 90.2 definitions. For example, suppose a CPDM reported an equivalent concentration of 1.0 mg/m^3 for a part 90 miner who worked nine hours on Monday. Under the proposed definition of WAE, this quantity would be multiplied by 8 hours, yielding an accumulated exposure on Monday of 1.0 mg/m^3 × 8 hours or 8.00 mg-hr/m^3. If the part 90 miner worked the rest of the week, including Saturday, the exposure accumulated during each of the other five shifts would be determined in the same manner. If the daily exposures accumulated by the part 90 miner for the week were recorded as follows: Monday—8.00 mg-hr/m^3; Tuesday—6.32 mg-hr/m^3; Wednesday—7.84 mg-hr/m^3; Thursday—6.80 mg-hr/m^3; Friday—5.69 mg-hr/m^3; Saturday—4.16 mg-hr/m^3, adding together the daily accumulated exposures yields a WAE of 38.81 mg-hr/m^3.

To continue, if the applicable standard for the part 90 miner is 1 mg/m^3, this quantity would be multiplied by 40 hours, yielding a WPAE of 40 mg-hr/m^3 for the part 90 miner. Since the WAE for the part 90 miner is 38.81 mg-hr/m^3, it would not exceed the WPAE of 40 mg-hr/m^3.

Proposed paragraph (d) would assure that the part 90 miner's respirable dust exposure for the work week would be limited to a calculated weekly permissible accumulated exposure for an equivalent 40-hour work week. This proposed paragraph is consistent with the NIOSH Criteria Document, which recommended that respirable coal mine dust be limited to 1 mg/m^3 as a TWA concentration for up to 10 hr/day during a 40-hour work week. Proposed § 90.209(d) and its rationale are identical to proposed § 70.208(e), which is discussed elsewhere in the preamble.

Proposed § 90.209(e) would require the operator to take actions, listed in proposed paragraphs (e)(1) through (e)(6), when a valid end-of-shift equivalent concentration meets or exceeds the ECV that corresponds to the applicable standard in Table 90–2, or a weekly accumulated exposure exceeds the weekly permissible accumulated exposure. The operator would be required to take the actions before the part 90 miner's next work shift begins. Proposed § 90.209(e) is consistent with proposed § 70.208(f); however, the language in proposed § 90.209(e) is tailored to apply to part 90 miners.

Proposed paragraph (e)(1) would require operators to make approved respirators available to affected part 90 miners in accordance with proposed § 72.700. The proposal is consistent with existing § 70.300, which requires the operator to make respiratory equipment available to all persons exposed to excessive concentrations of respirable dust. The rationale for this proposed provision is the same as that for proposed §§ 70.207(i)(1) and 70.208(f)(1) discussed elsewhere in the preamble.

Proposed paragraph (e)(2) would require the operator to implement corrective actions to assure compliance with the applicable standard on the next and subsequent work shifts. Corrective actions would include, for example, engineering or environmental controls that reduce the level of respirable dust, or transferring the part 90 miner to another position at the mine that is at or below the applicable standard. MSHA believes that the proposal would improve protections for part 90 miners, since the operator would need to determine factors that may have contributed to the overexposure and take corrective actions beginning on the part 90 miner's next work shift.

Under proposed paragraph (e)(3), if the corrective actions involve implementing dust control measures to lower the miner's respirable dust to within the applicable standard, the operator must submit the corrective actions as a proposed dust control plan, or proposed changes to an approved plan, for the part 90 miner. The proposal would require that the plan or plan changes be submitted as required in proposed § 90.300 to the District Manager for approval within 3 days of determining that the applicable standard has been exceeded. The rationale for proposed § 90.209(e)(3) is the same as that in proposed § 70.208(f)(3), which is discussed elsewhere in the preamble.

Proposed paragraph (e)(4) would require the operator to review the adequacy of the approved CPDM Performance Plan in relation to the part 90 miner. It would require the operator to submit any plan revisions, if needed, to the District Manager for approval. Plan revisions would be required to be submitted within 7 calendar days after the operator provides the end-of-shift equivalent concentration to the part 90 miner. Under the proposed rule, for example, if the applicable standard is exceeded, the operator would review the adequacy of the CPDM Performance Plan for the affected part 90 miner to assure that sufficient actions are required to prevent respirable dust concentrations from exceeding citable ECV levels and expose the miner to excessive dust. The proposed provision is consistent with proposed § 70.208(f)(4). MSHA believes that requiring the operator to review the CPDM plan would assist the operator in monitoring part 90 miners' exposure to respirable coal mine dust and in verifying the adequacy of the dust control parameters. In addition, like proposed § 70.208(f)(4), MSHA believes a 7-calendar day period is a reasonable amount of time for the operator to review and submit CPDM plan revisions for approval.

Proposed paragraph (e)(5), which is identical to proposed § 70.208(f)(5), would require the operator to record the reported excessive dust condition as part of and in the same manner as the records for hazardous conditions required by existing § 75.363. The proposal would require the record to include the following information: (i) Date of sampling; (ii) length of the sampled shift; (iii) location within the mine and the occupation where the sample was collected; (iv) the end-of-shift equivalent concentration, or weekly accumulated exposure and the weekly permissible accumulated exposure; and (v) corrective action taken to reduce the concentration of respirable coal mine dust to or below the applicable standard. The rationale for proposed § 90.209(e)(5) is the same as that for proposed § 70.208(f)(5), which is discussed elsewhere in the preamble.

Proposed paragraph (e)(6) would require the operator to comply with proposed §§ 90.102(c) and 90.207(a) when an operator transfers a part 90 miner to meet the applicable standard. MSHA believes that transferring a part 90 miner is an acceptable method to meet the applicable standard and protect the miner's health as long as the operator complies with proposed § 90.102(c) notice requirements and proposed § 90.207(a) sampling requirements.

Proposed § 90.209(f) would require the operator to take actions, listed in proposed paragraphs (f)(1) through (f)(4), when any valid end-of-shift equivalent concentration exceeds the applicable standard but is less than the ECV that corresponds to the applicable standard in Table 90–2. Proposed § 90.209(f)(1) through (f)(4), like proposed § 70.208(g)(1) through (g)(4), would require the operator to make respirators available, implement corrective actions, record the reported excessive dust conditions, and review the adequacy of the CPDM Performance

Plan. MSHA believes that corrective action taken when the applicable standard is exceeded would assure that respirable dust concentrations do not get to citable ECV levels and the part 90 miner's exposure to excessive dust is minimized.

Proposed § 90.209(f)(1) and (f)(2) would require the operator to make approved respirators available to the affected part 90 miners and implement corrective actions. MSHA believes these proposed requirements are necessary to prevent miners' overexposure to respirable dust and would provide improved protection for miners. The proposed provisions are consistent with proposed § 90.209(e)(1) and (e)(2) and proposed § 70.208(g)(1) and (g)(2). The rationale for this part 90 provision is the same as that for proposed § 70.208(g)(1) and (2), which is discussed elsewhere in the preamble.

Proposed § 90.209(f)(3), like proposed § 90.209(e)(5) and proposed § 70.208(g)(3), would require the operator to record the reported excessive dust condition as part of and in the same manner as the records for hazardous conditions required by existing § 75.363. The proposal would require the record to include the following information: (i) Date of sampling; (ii) length of the sampled shift; (iii) location within the mine and the occupation where the sample was collected; (iv) the end-of-shift equivalent concentration; and (v) corrective action taken to reduce the concentration of respirable coal mine dust to or below the applicable standard. Like other similar proposed part 70 and 90 provisions, the record would provide useful information for operators, miners, and MSHA to evaluate dust exposures, whether such conditions are recurring, and the effectiveness of the dust controls being used.

Proposed paragraph (f)(4) would require the operator to review the adequacy of the approved CPDM Performance Plan applicable to part 90 miners. It would require the operator to submit any plan revisions, if needed, to the District Manager for approval. Plan revisions would be required to be submitted within 7 calendar days after the operator provides the end-of-shift equivalent concentration to the part 90 miner. This proposed provision is consistent with proposed paragraph (e)(4). The rationale for proposed § 90.209(f)(4) is the same as that for proposed § 90.209(e)(4).

Q. Section 90.210 Respirable Dust Samples; Transmission by Operator

Proposed § 90.210, redesignated from existing § 90.209, would revise requirements for the operator to transmit sampling information collected by either a CMDPSU or CPDM. It would revise paragraphs (a) and (c) and add a new paragraph (f); paragraphs (b), (d) and (e) would remain the same.

Proposed paragraph (a) would make a non-substantive change to clarify that it only applies to operators' transmission of samples collected with a CMDPSU.

Proposed paragraph (c) would retain the existing requirement that only persons certified in sampling complete the dust data card provided by the manufacturer of the filter cassette. It would be revised to require that each dust data card be signed by the certified person who actually performed the sampling shift examinations. Consistent with MSHA's existing policy, the proposal would also require that the person's signature on the data card include that person's MSHA Individual Identification Number (MIIN). Proposed § 90.210(c) is identical to proposed § 70.210(c), and the rationale is discussed elsewhere in the preamble related to proposed § 70.210(c).

Proposed paragraph (f) is new and would apply when operators use CPDMs to sample. It would require that, within 12 hours after the end of the last sampling shift of the work week, a designated mine official must validate, certify, and transmit electronically to MSHA all daily sample and error data file information collected during the previous calendar week (Sunday through Saturday) and stored in the CPDM. It would also require the operator to maintain all CPDM data files transmitted to MSHA for at least 12 months. Proposed § 90.210(f) is identical to proposed § 70.210(f), and the rationale is discussed elsewhere in the preamble related to proposed § 70.210(f).

R. Section 90.211 Respirable Dust Samples; Report to Operator

Proposed § 90.211, redesignated from existing § 90.210, would address data contained in MSHA's report of respirable dust samples provided to operators. It would also address requirements for the operators' report provided to each part 90 miner. Proposed paragraphs (a)(1), (a)(5), (a)(6), and (b) would remain the same.

Proposed paragraph (a) would include minor editorial changes. Proposed paragraph (a)(2) would replace the language "mechanized mining unit" with "locations" to assure that all areas where part 90 miners work would be included.

Proposed paragraphs (a)(3) and (a)(4) would include conforming changes by adding that the concentration of respirable dust be expressed "as an equivalent concentration." The changes are consistent with other proposed provisions that specify that the concentration of respirable coal mine dust is converted to and expressed as an 8-hour equivalent concentration.

Proposed paragraph (a)(7) would revise the existing requirement to specify that MSHA's report will contain the part 90 miner's MSHA Individual Identification Number (MIIN) instead of a social security number. To assure privacy and to comport with Federal requirements related to safeguarding personal-identifiable information, MSHA has eliminated the use of social security numbers on its documents.

Proposed paragraph (c) is new and would apply to operators who use a CPDM. It would require the designated mine official to validate, certify, and provide certain sampling information to each part 90 miner. Proposed paragraph (c)(1) would require the designated mine official to provide each part 90 miner with a report of the daily end-of-shift sampling results within 1 hour of the part 90 miner's next work shift. The daily report must include the: mine identification number; location in the mine from which samples were taken; respirable dust concentration expressed as an equivalent concentration for each valid sample; total amount of exposure accumulated by the part 90 miner; occupation code; reason for voiding any sample; the part 90 miner's MIIN; and the shift length. This information, similar to that required under existing § 90.210 would provide miners with sampling and exposure information for the shift. Under the proposal, the District Manager could require any other information, such as the duties performed during the shift (*i.e.,* shoveling the belt or building stoppings), or the special purpose for sampling (certifying the part 90 miner in a new occupation or evaluating a new work location).

Proposed paragraph (c)(2) would require the designated mine official to provide to the part 90 miner the weekly accumulated exposure (WAE) and the weekly permissible accumulated exposure (WPAE) within 1 hour after the start of the part 90 miner's next work shift of a new work week (Sunday through Saturday). Providing part 90 miners with a copy of the WAE and WPAE would inform them of the total amount of coal mine dust exposure accumulated during the work week, as

well as the maximum amount of accumulated exposure to coal mine dust permitted to be received during a normal work week. Providing these data would assure that part 90 miners are informed of their weekly exposure levels so that they can take a proactive role in their health protection.

Proposed paragraph (d) is new and would not allow the operator to post part 90 sampling data on the mine bulletin board. This proposal is consistent with existing § 90.210(b).

S. Section 90.212 Status Change Reports

Proposed § 90.212(a), redesignated from existing § 90.220, would provide operators the option of reporting to MSHA changes in the status of a part 90 miner electronically instead of in writing.

Proposed paragraph (b) is new and would require the designated mine official to report status changes that affect the operational readiness of any CPDM within 24 hours after the status change has occurred. Examples could include a malfunction or breakdown of a CPDM that is needed for sampling, or failure to have a spare CPDM available for required sampling. Since MSHA would rely on data provided by the CPDM to evaluate dust controls and to assure that miners are not exposed to excessive levels of respirable coal mine dust, the Agency would need to be informed of any circumstances that would affect the operational readiness of CPDMs.

T. Section 90.300 Respirable Dust Control Plan; Filing Requirements

Proposed § 90.300 would address requirements for filing a dust control plan for a part 90 miner. MSHA is proposing to revise § 90.300(a) and 90.300(b)(2) and (b)(3); no changes are proposed for § 90.300(b)(1) or (b)(4).

Proposed § 90.300(a) would require that the operator submit a written respirable dust control plan to the District Manager for a part 90 miner identified in a citation and that the plan be adequate to continuously maintain respirable dust within the applicable standard for the part 90 miner. The proposed change "applicable standard" would replace "permissible concentration" in existing § 90.300(a). MSHA's rationale for proposing this change is the same as for proposed § 71.300(a), *i.e.,* to reflect the Agency's intent that the dust control plan must be sufficient to maintain dust levels at or below the applicable standard to ensure that respirable dust concentrations do not get to ECV levels. This would assure improved protection for miners.

The proposed rule would delete language in existing § 90.300(a) that requires submission of a respirable dust control plan for the part 90 miner within 15 calendar days after termination of a citation for violation of § 90.100 or § 90.101. Instead proposed § 90.300(a) would require the plan to be submitted "As required by § 90.208(f) and § 90.209(e)(3)." Both referenced sections, § 90.208(f) and § 90.209(e)(3), are discussed elsewhere in the preamble and specify the timeframes for operators to submit a respirable dust control plan, or proposed changes to an approved plan, when a CMDPSU or a CPDM is used.

Proposed § 90.300(b) would address the information that must be included in the dust control plan for a part 90 miner and would remain essentially unchanged from the existing requirements. Proposed § 90.300(b)(2) would revise the existing standard to require the dust control plan to include the name and MSHA Individual Identification Number (MIIN) of the part 90 miner instead of the part 90 miner's social security number as required by the existing standard. To assure privacy and to comport with Federal requirements related to safeguarding personal identifiable information, MSHA has eliminated the use of social security numbers on it documents. This requirement is consistent with MSHA's Program Policy Letter No. P08–III–1 (April 21, 2008). Proposed § 90.300(b)(3) would require the dust control plan include a detailed description of the specific respirable dust control measures used to continuously maintain concentrations of respirable coal mine dust at or below the applicable standard. The proposal would revise the existing standard, which requires a detailed description of control measures used to "abate violations" of the respirable dust standard. The proposed revision would clarify that the dust control measures must be sufficient to continuously maintain dust levels at or below the applicable standard and not overexpose part 90 miners. The proposal would improve the health protections of part 90 miners.

U. Section 90.301 Respirable Dust Control Plan; Approval by District Manager; Copy to Part 90 Miner

Proposed § 90.301 would address the criteria MSHA would use to approve the dust control plan, as well as require operators' compliance with plan provisions. Proposed § 90.301(a)(1) and (b) would be identical to proposed § 70.301, discussed elsewhere in this preamble. MSHA is not proposing revisions to paragraphs (a)(2), and (c) through (e).

IV. Health Effects

A. Introduction

This section summarizes the health effects from occupational exposure to respirable coal mine dust. MSHA discussed health effects in its Notice of Proposed Rulemaking (NPRM) on Plan Verification, which was published on March 6, 2003 (68 FR 10784). The literature referenced in that document pre-dated 1999. This section discusses the more recent literature dating from 1997 to mid-2009 with occasional references to earlier papers.

Pulmonary disease in miners chronically exposed to coal mine dust consists of interstitial and obstructive diseases. Miners develop Coal Workers' Pneumoconiosis (CWP) or chronic obstructive pulmonary disease (COPD). There are no specific treatments to cure pneumoconiosis or COPD. These chronic effects may progress even after miners are no longer exposed to coal dust resulting in increased disability and death. Other complications may follow, such as pulmonary and cardiac failure, that result in total disability and premature death.

Reduction of coal mine dust exposure is the only effective way to prevent either CWP or COPD. Screening and surveillance programs detect trends and clusters of disease occurrences and allow secondary preventive intervention to slow the rate of progression in individual miners. Data from screening and surveillance programs provide estimates of the prevalence of occupational respiratory disease among working coal miners.

At the existing standard of 2.0 mg/m^3, cases of CWP and COPD continue to occur. In recent years, the prevalence of CWP has increased among experienced miners, and in some cases, CWP has progressed rapidly to PMF. The persistence of disease requires that additional action be taken to reduce coal mine dust exposures. The proposed requirements would result in a further reduction in occupational pulmonary disease, disability, and premature mortality in coal miners.

B. Hazard Identification

1. Agent: Coal Mine Dust

Coal may be classified on the basis of its type, grade, and rank. The type of coal is based on the plant material (*e.g.,* lignin, cellulose) from which it originated. The grade of coal refers to its chemical purity. Although coal is largely carbon, it may also contain other elements such as hydrogen, oxygen,

nitrogen, and sulfur. Coal rank reflects the stage the coal has reached on the coalification path (*i.e.*, the processes involved in the historical transformation of plants to form peat, lignite, sub-bituminous coal, bituminous coal, and anthracite). High rank "hard" coal refers to coal with a higher carbon content (*e.g.*, 90–95%) than "soft" coal (*e.g.*, 65–75%). In addition to hardness, coal rank refers to its fixed carbon content, down to 65%, and then by its heating value and amount of volatile matter. The most commonly described coal ranks include lignite (low rank), bituminous coal (medium rank), and anthracite (high rank) (68 FR 10784). The inorganic components of coal include phyllosilicates, quartz, carbonates, and sulfates. Coal deposits also contain metals, mostly iron and aluminum and trace amounts of arsenic, nickel, zinc, cadmium, cobalt, mercury, beryllium, and copper (Huang *et al.*, 2005). The relative toxicity of coal increases with its rank.

2. Physical State: Respirable Coal Mine Dust

Dusts are solid particles suspended in the air. Coal dust may be freshly generated or may be re-suspended from surfaces on which it is deposited in mines. Dust particles have an irregular shape and a wide range of sizes. Coal mine dust may be inhaled by miners, and some of the smaller respirable particles are deposited, some are cleared, and the remainder is retained in their lungs where it can initiate or advance the disease process.

Coal mine dust particles are insoluble in water which is important biologically and physiologically. Soluble dusts can be absorbed into the blood stream but insoluble dusts may remain in the lungs for prolonged periods of time resulting in a variety of cellular responses that could lead to pulmonary disease (68 FR 10784).

3. Biological Action: Respirable Coal Mine Dust

Coal mine dust has a particle size distribution that typically ranges between 1 and 100 micrometers (μm) in diameter (note: 1 μm = [1/1,000,000] meter). The size of the coal particles determines how deeply into the respiratory tract they penetrate (ACGIH, 1999; AIHA, 1997). Dusts that are small enough to penetrate to the alveolar region are called respirable dusts. They range in size up to 10 or even 20 μm in diameter but most respirable particles (68 FR 10784) are approximately 1–2 μm in diameter.

Because dust in this size range is responsible for disease, it is the fraction that is measured in the mine environment. The particles collected with an approved sampling device in accordance with 30 CFR part 74 (Coal Mine Dust Sampling Devices) approximate that portion of the dust which may be deposited in the lungs (68 FR 10784, 75 FR 17512).

Respirable dust particles are deposited but, as part of the lung's defense mechanism, most particles are cleared. Within the upper airways, hair-like projections called cilia line the airways and are covered by a thin layer of mucus. Cilia create waves to carry particles toward the throat where they are swallowed, coughed up and spat out, or sneezed out. This mechanism removes particles quickly, within hours or days. In the deepest region of the lower airways, the alveolar region, particles are cleared by pulmonary macrophages. These cells engulf and carry particles to the ciliated airways or may remove them by way of the blood or lymphatic system or by storing them in the spaces between cells. This process, unlike the movement of the cilia, is much slower and can take months or years. Thus, some particles may remain in the alveolar region for a very long time and some are retained permanently. Either alveolar clearance or ciliated clearance can be altered by disease progression. It is the retention of coal mine dust in the alveolar region that is the starting point for the coal macule (a combination of coal dust and macrophages) and CWP (Kuempel *et al.* 2001a, 2001b; Hatch and Gross, 1964; Oberdorster, 1995).

4. Mechanism of Action: Respirable Coal Mine Dust

The literature includes various mechanisms of damage, inflammation, and lung scarring that explain the development and progression of pulmonary disease induced by the inhalation and retention of coal mine dust. These include direct cell destruction (*i.e.*, cytotoxicity), activation of oxidant production by alveolar macrophages, and stimulation of inflammatory and fibrogenic factors (Attfield *et al.*, 2007).

a. Cytotoxicity

Coal mine dust exposure can cause direct cell membrane damage, as indicated by hemolysis of red blood cells, lactate dehydrogenase released from alveolar macrophages, and lipid peroxidation. Researchers concluded that some coal dust-related toxicity could be related to trace metal contaminants in the coal dust. For example, water leachate of Pennsylvania coal is reportedly more potent in inhibiting in vitro mammalian cell growth than Utah coal leachate. This potency difference is, in part, related to the nickel content of these coal samples. There are other studies that support bioavailable iron (BAI) as another pathway through which oxidative injury is initiated in lung tissue. Huang *et al.* (2005) found that iron present in coal can become bioavailable by pyrite oxidation, which produces ferrous sulfate and sulfuric acid. In different deposits of coal, calcite content could neutralize the available acid and inhibit iron's bioavailability. This could partially explain the different toxicity of coals seen not only in the United States, but also in Europe and Asia (Huang *et al.*, 2005; Zhang and Huang, 2005; Zhang *et al.*, 2002; McCunney *et al.*, 2009).

Cell destruction is also related, in part, to the generation of free radicals. Free radicals are highly reactive molecules or sub-atomic particles that are created, for example, by crushing coal or other rocks (Cohen *et al.*, 2008). Anthracite coal generates more free radicals than bituminous coal when fractured. This difference in potency is reflected in the higher prevalence of CWP among anthracite miners (Attfield *et al.*, 2007).

Oxidative free radicals contribute to the development and progression of pulmonary disease by at least three mechanisms. First, oxidants react with a variety of pulmonary proteins. Second, these oxidized proteins contribute to the inactivation of naturally occurring chemicals such as α_1-antitrypsin, which is important in the development of emphysema. Third, oxidants promote inflammation and may be important in the development of asthma (Luppi and Hiemstra, 2007; De Andrade *et al.*, 2005).

b. Activation of Reactive Oxidant Species

Coal dust increases the production of reactive oxygen and nitrogen species in the alveolar macrophages of miners exposed to coal dust. Coal miners with CWP show evidence of such species but this activity does not occur in asymptomatic coal miners. The magnitude of reactive species was directly related to the severity of CWP (Attfield *et al.*, 2007).

c. Stimulation of Inflammatory and Fibrogenic Factors

Coal miners with CWP suffered inflammatory injury to their lungs but similar effects were not found in asymptomatic coal miners. Cohen *et al.* (2006) found that pyrite (FeS_2), a common iron compound found in some

coal dust, can generate reactive oxygen species. This may be one way that the inflammation associated with CWP development begins. Such an effect was found in coal miners with simple CWP but not in a control group (Altin *et al.* 2004). Higher rank coals also have a higher electrostatic charge when broken during mining. This higher charge on the coal particles leads to an increased degree of agglomeration of submicron coal dust particles. These particles enhance respiratory deposition and toxicity due to their higher lung deposition efficiencies than uncharged particles. These characteristics may contribute to the increased incidence of CWP observed in high-rank coal regions (Page and Organiscak 2000).

Coal dust toxicity may be increased by modern mining practices that shear the coal, creating more freshly broken coal dust. A greater number of free radicals is contained on the exposed surface of freshly created dust (Cohen *et al.* 2008). Coal dust exposure has also been associated with elevated production of fibrogenic (*i.e.*, scar-producing) factors. Evidence indicates that production of these fibrogenic factors is directly related to disease severity.

C. Health Effects

Epidemiological studies have consistently demonstrated the serious health effects of exposure to high levels of respirable coal mine dust (*i.e.*, above 2.0 mg/m3) over a working lifetime. Table V–1 lists epidemiological studies published since 1997. The results of these studies will be discussed on the basis of the type of observed health effect. These studies show that the lung is the major target organ in which toxic effects occur from inhalation of respirable coal mine dust. Numerous studies of miners have been conducted in the U.S., as well as in a number of other coal-producing countries (*e.g.*, England, France, Poland, Germany, Turkey, South Africa, China, and Taiwan). Recent U.S. studies were conducted using data from the National Study of Coal Workers' Pneumoconiosis (NSCWP) surveys, and have provided extensive data on miners' health. The results of these studies demonstrate that miners are at increased risk of multiple, concurrent respiratory ailments, including asthma, COPD, and CWP.

TABLE V–1—RESPIRABLE COAL MINE DUST EPIDEMIOLOGICAL STUDIES, REPORTED EFFECTS FROM 1997 TO PRESENT

Study	Population studied	Exposure measure	Reported effects								
			LLF	RS	CB	A	COPD	E	CWP	PMF	NMRD
Althouse et al., 1998*	U.S.	Tenure							√	√	
Altin et al., 2004	Turkey	Tenure		√					√		
Antao et al., 2005*	U.S.	N/A							√	√	
Antao et al., 2006	U.S.	Tenure & Job	√	√	√				√	√	
Attfield et al., 2004	U.S.	N/A							√		
Attfield et al., 2007+	Various	N/A	√		√		√	√	√	√	
Attfield and Petsonk, 2007*.	U.S.	Tenure							√	√	
Attfield and Kuempel, 2008*.	U.S.	Region & CDE			√			√	√	√	√
Attfield et al., 2009*	U.S.	# Miners/Region & Tenure.							√		
Beeckman et al., 2001*	U.S.	N/A	√	√	√	√	√	√			
Bourgkard et al., 1998	France	CDE	√	√	√				√		
Coggon and Newman-Taylor, 1998+.	Review		√	√	√		√	√	√		
Cohen et al., 2008+	U.S.	N/A	√		√		√	√	√	√	
Cowie et al., 1999	Britain	CDE	√	√	√						
Green et al., 1998a*	U.S.	Tenure						√	√	√	
Green et al., 1998b*	U.S.	Tenure						√	√	√	
Henneberger and Attfield, 1997*.	U.S.	CDE	√	√	√						
Hurley et al., 2002	Britain	CDE (N/A)		√	√				√	√	
Kuempel et al., 1997*	U.S.	RDC & CDE & Tenure.	√				√	√	√	√	
Kuempel et al., 2009a*	U.S.	CDE	√					√			
Kuempel et al., 2009b*	U.S.	CDE & Tenure						√	√	√	
Lin et al., 2001	Taiwan	Tenure	√	√	√		√		√		
Love et al., 1997	Britain	RDC	√		√	√			√		
MacCalman and Miller, 2009.	Britain	Tenure			√		√	√	√	√	√
Meijers et al., 1997	Dutch	Tenure	√	√			√		√	√	√
Miller et al., 1997	Britain	CDE			√				√	√	
Miller et al., 2007	Britain	CDE			√		√	√	√	√	√
Naidoo et al., 2004	S. Africa	CDE	√	√	√				√		
Naidoo et al., 2005	S. Africa	CDE	√								
Naidoo et al., 2006	S. Africa	CDE	√	√	√						
Page and Organiscak, 2000.	U.S.	N/A							√	√	
Peng et al., 2005 [abstract].	China	RDC	√								
Pon et al., 2003*	U.S.	Tenure							√	√	
Ross and Murray, 2004+.	Various	N/A	√	√	√			√	√		
Scarsbrick and Quinlan, 2002.	Britain	N/A							√		

TABLE V–1—RESPIRABLE COAL MINE DUST EPIDEMIOLOGICAL STUDIES, REPORTED EFFECTS FROM 1997 TO PRESENT—Continued

Study	Population studied	Exposure measure	Reported effects								
			LLF	RS	CB	A	COPD	E	CWP	PMF	NMRD
Smith and Leggat, 2006.	Australia	N/A							√		
Soutar et al., 2004+	Britain	RDC & CDE	√						√	√	
Wang et al., 1997	China	Tenure	√					√			
Wang et al., 2005	China	T & RDC	√								
Wang et al., 2007	China	RDC	√	√	√						
Wang ML et al., 1999	U.S.	Tenure	√								
Wang X et al., 1999	China	Tenure	√	√	√			√	√		
Yeoh and Yang, 2002	Taiwan	Tenure	√				√			√	

*Studies of U.S. Miners Participating in the National Study of Coal Workers' Pneumoconiosis (NSCWP) or Nationwide Coal Workers Autopsy Study (NCWAS).
+Review.
A: Asthma. N/A: Not Applicable.
CB: Chronic Bronchitis. NMRD: Non-Malignant Respiratory Disease.
CDE: Cumulative Dust Exposure. PMF: Progressive massive fibrosis.
COPD: Chronic obstructive pulmonary disease. RDC: Respirable Dust Concentrations.
CWP: Coal workers' pneumoconiosis. RS: Respiratory symptoms, such as cough or phlegm.
E: Emphysema. T&RDC: Total and Respirable Dust Concentrations.

1. Estimates of Morbidity and Mortality

a. Morbidity (Prevalence of Disease)

Routine screening leading to timely intervention affords the opportunity to prevent further development or progression of occupational pulmonary disease among miners still exposed to coal dust. Surveillance programs exist in both the United States and Great Britain. These data show that coal dust-related diseases among miners still exist at unacceptable levels. These data sources and studies are described below.

(1) Data Sources: American Pneumoconiosis Surveillance

There are three surveillance programs in the United States that track the prevalence of coal–related disease. These are—

- The Coal Workers' X-ray Surveillance Program (CWXSP),
- The Miners' Choice Program (MCP), and
- The Enhanced Coal Workers' Health Surveillance Program (ECWHSP).

The CWXSP is an occupational health program established by the Coal Mine Health and Safety Act of 1969 (Coal Act) and administered by the National Institute for Occupational Safety and Health (NIOSH) pursuant to 42 CFR part 37. The program screens underground coal miners for pneumoconiosis. Since implementation of the Coal Act in 1970, coal mine operators have been required to pay for chest radiographs of all underground coal miners at the time of hire and again 3 years later. Coal mine operators are also required to provide miners with the opportunity for additional x-rays at a NIOSH-approved facility every 5 years at no cost to the miners for the remainder of their mining careers (Attfield and Petsonk, 2007).

The initial medical survey under this program was conducted between 1969 and 1971. It included posterior-anterior and lateral chest x-rays and a questionnaire that collected information on symptoms, demographics, smoking and work history, work tenure, and specific jobs in the mine. The chest films were read by physicians certified by NIOSH as proficient in use of the International Labour Office (ILO) classification system for radiographs of the pneumoconioses. Each film was read by at least two readers who used a consensus approach to reach a final determination for each film. The CWXSP defines CWP as small opacity profusion category of at least 1/0 or large opacities (i.e., larger than one centimeter in diameter). Miners with evidence of CWP are offered the option to work in an area of the mine with a respirable coal mine dust level of 1 mg/m^3 or less and have personal dust exposures monitored at frequent intervals (NIOSH, 2008).

In 1996, the Secretary of Labor's *Advisory Committee on the Elimination of Pneumoconiosis Among Coal Workers* (Advisory Committee) recommended that monitoring for pneumoconiosis be expanded to include surface coal miners and independent contractors. The Advisory Committee also recommended incentives to increase underground coal miners' participation. In response to the Advisory Committee recommendation, MSHA and NIOSH implemented the Miners' Choice Health Screening Program (MCP) in October 1999 in an attempt to reach not only surface miners but also additional underground miners. Through the MCP, MSHA paid for the miners' x-rays that were taken at any certified medical facility. MSHA communicated the results of the testing to the individual miners. The MCP and the CWXSP identified cases of CWP and PMF.

The MCP x-rays were processed using the same procedures and criteria used in the CWXSP in accordance with the requirements of 42 CFR part 37. The participants were miners from 586 surface coal mines and 444 underground coal mines and included eight active surface coal mining communities in Pennsylvania, Kentucky, and West Virginia, as well as Poteau, Oklahoma, and Gillette, Wyoming. A ninth group included underground miners in Kentucky. The process was designed to encourage miners' participation by providing for a greater degree of anonymity than may be available under the CWXSP. The program ended in October 2002 and more than 19,500 active coal miners from 20 states voluntarily participated (Pon *et al.,* 2003; 68 FR 10784).

NIOSH in cooperation with MSHA initiated the ECWHSP in March 2006 to increase participation by providing additional respiratory health evaluations to coal miners using a mobile medical examination unit to bring the medical exams to the miners in the field. NIOSH and MSHA hoped that this program would provide early detection of dust-related pulmonary disease and target additional areas for prevention. Standardized questionnaires, pulmonary function testing, and chest x-rays are administered following the protocol of

the CWXSP (Antao *et al.,* 2006; Attfield and Petsonk, 2007).

The National Center for Health Statistics (NCHS) collects population data on the prevalence of asthma and COPD (including chronic bronchitis) in the National Health Interview Survey (NHIS). Another survey used to assess the health status of the population is the National Health and Nutrition Examination Survey (NHANES). Findings from these surveys are used to determine the prevalence of major diseases, including pneumoconiosis, and their risk factors in the general population (NIOSH, 2008). Approximately 30% of American miners have participated in these surveys, resulting in a large database.

(2) Data Sources: British Pneumoconiosis Surveillance

British health surveillance started in the 1950s with the Pneumoconiosis Field Research (PFR) program. In addition, radiographic assessment was conducted by the Periodic X-ray (PXR) Scheme of the British National Coal Board, and medical investigations were conducted by the Pneumoconiosis Research Unit (PRU) of the Medical Research Council.

The United Kingdom National Joint Pneumoconiosis Committee recommended to the National Coal Board that it establish the Pneumoconiosis Field Research (PFR) program in the early 1950s. This recommendation was based on research indicating that over 36,000 coal miners were disabled by pneumoconiosis between the years 1931 and 1949. The purpose of the PFR program was to conduct field research to determine the kinds and quantities of dust that cause pneumoconiosis and to establish health-based exposure levels to reduce the development of disease in miners. In addition, the PXR Scheme of the British National Coal Board took x-rays and the Pneumoconiosis Research Unit (PRU) of the Medical Research Council conducted medical investigations. There have been at least 10 rounds of health surveys conducted under the PFR program between 1959 and 2000. Voluntary health surveys were conducted every five years and included chest radiographs, pulmonary function tests, and questionnaires on respiratory symptoms and smoking habits. Initially, response rates were generally above 90%.

Concurrent with the health surveys, a separate industrial hygiene (IH) assessment was conducted as part of the PFR program that quantified typical concentrations of respirable dust and quartz for a variety of occupations within the mines. These exposure measurements were linked to data from payroll systems on the times worked by each miner in the same occupations. This IH assessment work produced individual and period-specific estimates of exposure to respirable dust and quartz. The number of mines included in the surveys has fluctuated from 24 representative British collieries (coal mines) in the early 1950s to between 10 and 15 collieries in more recent years. Since the PXR does not follow a defined cohort of miners, results may not be representative of the mining population in Britain (MacCalman and Miller, 2009; Attfield and Kuempel, 2003; Scarisbrick and Quinlan, 2002). In cohort studies subjects are selected based on their exposure status, in this case, coal dust. The complete cohort should be followed over time to track disease development.

(3) Estimates of Prevalence in Active American Coal Miners

Studies conducted by NIOSH and MSHA estimated the prevalence of pneumoconiosis in current coal miners using data collected between October 1, 1995, and September 30, 2002, from the CWXSP and MCP surveillance programs (Pon *et al.,* 2003; Antao *et al.,* 2005; Cohen *et al.,* 2008). A total of 35,983 readable chest films from 31,179 contract and non-contract miners at 1,439 mines in 23 states were evaluated. The prevalence of CWP in this population was 2.8% (n = 862 cases), and the prevalence of PMF was 0.2% (n = 62 cases).

The prevalence of CWP among non-contract employees at surface mines, non-contract employees at underground mines, and contract miners was 1.9%, 3.2%, and 3.0%, respectively. The prevalence of CWP and PMF in underground non-contract miners from 16 states ranged from 0.0% to 9.6%, and 0.0% to 0.6%, respectively. Miners that worked at larger mines (greater than 50 employees) had a lower prevalence of pneumoconiosis than those from smaller mines (2.0% versus 5.6% for CWP, and 0.1% versus 0.5% for PMF, respectively).

As expected, the prevalence of CWP and PMF increased with age and the length of time worked in coal mining. Information about the length of time worked in coal mining was available for 28,253 miners (18,388 underground miners and 9,793 surface miners).

In a broader examination of the data, NIOSH reported the number of cases of CWP category 1/0+ for five year intervals from 1970 through 2004 (NIOSH, 2008). The range of cases (and their percentages) were 11,847 cases in 1970 (11.2% of all miners examined). This number dropped to 601 cases (3.6%) in the 2000 to 2004 time period. The estimate for the 2 years of 2005 and 2006 is 270 cases (3.3%). The prevalence rate increases as tenure in mining increases, from 0.7% for miners with 0 to 4 years in mining to 9.9% for miners with 30 or more years in mining.

NIOSH researchers further examined these data to determine if disease progression could be determined in the 783 underground coal miners who had at least two radiographs available for review (Antao *et al.,* 2005). NIOSH determined that 277 (35.4%) of these miners presented evidence of rapidly progressive CWP and 41 (14.8%) of these miners presented evidence of PMF. Eight cases showed progression of one subcategory over 5 years, 156 cases had progression equivalent to two or three subcategories over a 5-year period, and 72 cases had progression the equivalent of more than three subcategories over a 5-year period.

Rounded opacities were the primary shape/size in 73% of the rapidly progressive cases compared to 50% in the non-rapidly progressive cases. Overall, the miners with rapidly progressive CWP were somewhat younger (mean age 48) than the remaining miners evaluated (mean age 51), but were similar in mean work tenure (27 to 28 years). Miners with rapidly progressive cases were more likely to have worked in smaller mines than in larger mines. These miners also reported longer mean tenure in jobs involving work at the face of the mine (19 years), compared to miners without rapid progression (17 years). These particular cases occurred in miners from eastern Kentucky and western Virginia (Antao *et al.,* 2005).

Clusters of newly identified cases of advanced pneumoconiosis were surveyed in 2006 by ECWSHP teams that visited two counties in Virginia (Antao *et al.,* 2006) and in eastern Kentucky and southwestern Virginia (Attfield and Petsonk, 2007). In March and May 2006, 328 underground coal miners employed in Lee and Wise counties in Virginia were examined, representing 31% of the estimated 1,055 underground miners in those counties. The mean age of examined miners was 47 years, and their mean tenure working in underground coal mines was 23 years. A total of 216 (66%) had worked at the coal face for more than 20 years; and 30 (9%) had radiographic evidence of pneumoconiosis (i.e., category 1/0 or higher profusion of small opacities). Of these, 11 miners had advanced cases, including five with large opacities consistent with PMF and six with coalescence of small opacities on a

background profusion of category 2. Among the 11 miners with advanced cases, the mean age was 51 years (range: 39–62 years), the mean tenure in underground coal mines was 31 years (range: 17–43 years), and the mean number of years working at the coal face was 29 years (range: 17–33 years). All 11 advanced cases met the radiographic criteria for rapidly progressive CWP. All reported at least one respiratory symptom (i.e., productive cough, wheeze, or shortness of breath), the most common being shortness of breath (dyspnea). Four of the nine who underwent lung function testing had abnormal results (Antao *et al.,* 2006).

In a separate ECWSHP survey in 2006, pneumoconiosis rates were determined for 26 sites in seven counties in eastern Kentucky and southwestern Virginia. A total of 975 (20%) of the 4,897 active underground miners in the counties participated; 37 (4%) of those tested had advanced pneumoconiosis. Many of these miners had worked underground for many years without medical follow-up. Medical records indicated that all 37 miners with advanced disease had worked underground for at least 10 years without a chest x-ray; 22 (59%) had worked for at least 20 years and two others had worked for more than 30 years (Attfield and Petsonk, 2007).

(4) Estimates of Prevalence in Active British Coal Miners

Published PXR results include data for miners and, where appropriate, separate reports for contractors. A summary of the prevalence of pneumoconiosis in a given time frame illustrates the decrease in the size of the British coal mining industry over the last 40 years. Pneumoconiosis prevalence decreased from 12% (56,000 cases) in the years 1959 through 1963, to 0.2% (13 cases, all category 1) in the years 1994 through 1997. The prevalence in the years 1998 through 2000, however, rose to 0.8% (35 cases) and included nine cases of category 2 CWP or greater. The incidence of new cases diagnosed on second examination among those miners x-rayed on two occasions in the ninth round of the PXR was 1.4 per 1,000 (all category 1). In the years 1998 through 2000, it rose to 6.9 per 1,000 (a total of 32 cases, 23 category 1 and nine category 2 CWP or greater). A similar increasing trend in CWP prevalence is apparent in British miners as in U.S. miners. At the beginning of the British tracking scheme (1959 through 1963), CWP prevalence was 12%; it had dropped to 0.2% in 1997. But surveillance from 1998 to 2000 shows an increase to 0.8%. The authors speculated that reasons behind the increase may include longer working hours, the increased average age of miners, and changes in mining practices (Scarisbrick and Quinlan, 2002).

b. Mortality (Disease That Results in Death)

The mortality experience of U.S. and British coal miners has been studied by using either autopsy studies or death certificate data. These data sources and studies are described below.

(1) Data Sources: American Miners

Two autopsy study populations have been used by researchers studying the effects of coal mine dust exposure on mining populations. The first was a study group that consists of 616 underground coal miners autopsied at the Beckley Southern Appalachian Regional Hospital, Beckley, West Virginia from 1957 through 1973. All cases had at least one year of underground bituminous coal mining experience in various mines within a 100 mile radius of Beckley. The following information was collected at time of death: Age at death, smoking history, underground coal mining tenure, and cause of death. A control autopsy group was comprised of 106 non-miners: 56 cases from the same hospital who died during the same period as the coal miners and a series of Medical Examiner autopsies of 50 men at the University of Vermont from 1972 through 1978. All autopsy and demographic data were collected and processed in a similar manner. At autopsy, whole left lungs were removed, inflated, and preserved and tissue blocks were taken for histologic examination from representative areas of the right and left lungs (Vallyathan *et al.,* 1997; Kuempel *et al.,* 2009a and b).

The second autopsy group is the U.S. nationwide autopsy program (National Study of Coal Workers' Pneumoconiosis) for underground coal miners. This program was initiated in 1969 as part of the Coal Act and implemented in 1972 under section 411(c) (Black Lung benefit claims). Research has been published on approximately 6,580 autopsy cases from 27 states through 1996. For each case, information was obtained by means of a questionnaire completed by the next of kin on age, years of underground mining tenure, primary job within the mine, smoking history, and state where the questionnaire was completed. A pathology report and a minimum of three blocks and slides of lung tissues were submitted. The population autopsied represented approximately 12% of all deceased miners (Green *et al.,* 1998b).

(2) Data Sources: British Miners

Study of mortality within the PFR cohort began in 1970 and has compared the mortality experience of the first survey dating from the 1950s with that expected on the basis of general population rates (Miller *et al.,* 1997 and 2007; MacCalman and Miller, 2009). There were a series of six PFR surveys beginning in 1954 and ending in 1978. In the first survey, 24 collieries were included in the study. In the remaining rounds of the survey, 10 collieries were studied. Surveys were used in the first round to estimate exposure; whereas in subsequent rounds actual dust measurements were provided (Miller *et al.,* 2007). The mortality experience of 18,000 of the initial 31,000 men in the first round was followed over time. Most of the deep mines in Britain closed around 1980. The cohort's vital status is still being tracked; though exposure estimates are the same as those reported in Miller *et al.* (1997). Mortality of the mining population is compared to that of a reference population, controlled for region, age, and year-specific rates. The number of observed deaths in the cohort is compared to that in the comparison population and a standard mortality ratio (SMR) is calculated. If the ratio is over 100, than the death experience of the cohort is elevated above that of the comparison group. If the ratio is less than 100, then there were fewer deaths from a specific cause in the cohort than in the comparison population. Statistical techniques are applied to determine if the specific-cause of death SMRs are statistically significant, usually at a 95% confidence level.

(3) Estimates of Mortality in American Coal Miners

Green *et al.* (1998b) researched the prevalence of the various pathological types of CWP that occurred in deceased miners by evaluating lung specimens collected as part of the NCWAS during 1972 to 1996. The researchers examined lung specimens from 4,115 randomly selected cases from 27 states. In this autopsy survey, the authors determined that the overall frequencies of CWP lesions were:

- 77% macules;
- 39% nodules (macules develop into nodules);
- 23% silicosis;
- 8% progressive massive fibrosis (PMF); and
- 80% emphysema.

The prevalence of all types of lesions has declined over the years. At the beginning of the autopsy survey in the

1970s, miners had died who worked in the industry in the 1940s. Their prevalence of nodular CWP at death was 53%. Autopsies of miners who had begun working in the industry since 1970 (under the existing 2 mg/m^3 standard) had a 17% prevalence of nodular CWP at death. The results of this autopsy study indicate that as dust exposure was reduced in U.S. mines the prevalence of CWP also was reduced. Attfield *et al.* (2004) examined mortality from pneumoconiosis using National Center of Health Statistics data from 1968 through 2000. They found that overall age-adjusted death rates for CWP dropped 36% from the 1968–1981 time period to the 1982–2000 time period.

From 1990 to 1999, a large majority of CWP deaths were associated with employment in the coal mining industry, for which proportionate CWP mortality was more than 50 times higher than that of all occupations combined. A review of death certificates for the years 1968 through 2005 shows that CWP mortality has been declining rapidly in the anthracite coal region of Pennsylvania, reflecting the reduction in coal mining in this region over the last 30 years. In the much larger bituminous coal mining regions, deaths from CWP have declined over time but may be increasing among younger miners (Attfield *et al.,* 2009). Nationally, CWP deaths among U.S. residents age 15 and over continue to decline, from well over 2,500 deaths annually in the early 1980s to well below 1,000 in the early 2000s. CWP deaths accounted for over one-third of pneumoconiosis deaths during the 10-year period from 1995 to 2004; and seven counties (two in Virginia, one in Pennsylvania, one in Kentucky, and three in West Virginia) had age-adjusted CWP death rates that exceeded the national rate by more than 100-fold (NIOSH, 2008).

In order to determine mortality rates for a cohort of 9,078 working coal miners who participated in the initial round of the CWXSP surveillance survey from 1969 to 1971, NIOSH researchers conducted a study that reviewed the 23-year mortality experience of the cohort and analyzed the mortality data through 1993. The final analysis included the mortality experience of 8,899 miners (Attfield and Keumpel, 2008). The vital status of these miners was determined using various sources. Death certificates were obtained from the appropriate State Department of Vital Statistics to collect cause of death information, including underlying and contributing causes of death. Exposure data from the CWXSP were cross-referenced on the decedents. Cumulative dust exposure estimates were determined based on tenure in mining and estimates of dust concentrations for given occupations.

This group of miners experienced increased mortality from nonmalignant respiratory diseases (NMRD), pneumoconiosis, and other respiratory diseases. Mortality was significantly associated with coal rank in decreasing order of anthracite, east Appalachia, west Appalachia, and the West. A significant trend in NMRD mortality was seen with increasing severity of pneumoconiosis after controlling for age, coal rank region, and smoking. Coal dust exposure was also significantly related to NMRD mortality independent of pneumoconiosis. There was also a statistically significant trend in mortality from NMRD with increasing dust exposure and with increasing radiographic category of simple or complicated CWP. It is important to note that miners with minimal CWP had significantly elevated levels of NMRD mortality despite the fact that their mean cumulative dust exposure was less than would be expected after a 40-year working life at the existing limit of 2 mg/m^3. Smoking had a significant impact on the mortality experience of these miners. However, it did not appear to be a confounding factor in the current findings for NMRD mortality because the prevalence of smoking did not vary systematically with mortality among miners across the pneumoconiosis or cumulative dust exposure groups (Attfield and Keumpel, 2008).

A large proportion of miners in every coal mining state die due to CWP. NIOSH (2008) reported the proportionate mortality ratio (PMR), adjusted for age, sex, and race, for the years 1990 to 1999 for specific coal mining occupations. The PMR is the observed number of deaths divided by the expected number of deaths. A PMR greater than 1.0 indicates more deaths associated with CWP in a specific coal mining occupation than expected. Over all, the age-adjusted PMR for the coal mining industry due to CWP is estimated to be 53.2. For individual occupations the estimates were as follows:

Occupation	PMR
Mining machine operators	51.7
Supervisors in extractive occupations	14.4
Mining engineers	6.0
Mining occupations not elsewhere classified	4.5
Miscellaneous material moving equipment operators	2.3
Locomotive operating occupations	2.0

These data indicate that coal miners in production jobs have higher proportionate mortality from CWP (NIOSH, 2008).

(4) Estimates of Mortality in British Coal Miners

Data show that mortality risks due to NMRD (including COPD, chronic bronchitis, and emphysema) and severe pneumoconiosis have increased over time. Analyses have also shown exposure-response relationships for risks of various respiratory causes of death with increasing exposure to dust, but little evidence of increased cancer risks from dust or quartz exposures (MacCalman and Miller, 2009). Miller *et al.* (1997) reported that between the second phase of the PFR (November 1957 to June 1963) through December 1992 the number of deaths in the British cohort of 23,789 men was 7,002 (29.4%). Of theses deaths, 1,272 (18.2%) were from respiratory disease: 436 (6.2%) from chronic bronchitis, 56 (4.4%) from other bronchitis, 203 (16%) from pneumoconiosis (including seven silico-tuberculosis deaths), and 584 (8.3%) from other respiratory causes.

Miller *et al.* (2007) updated this analysis by including 14 more years of follow-up and covering mortality through 2006. The number of deaths in the British cohort of 17,820 men was 10,698 (60.0%) from all causes. Deaths from respiratory diseases were 1,966 (11.0%) from NMRD, 849 (4.8%) from COPD, 500 (2.8%) from chronic bronchitis, 70 (0.4%) from emphysema, and 288 (1.6%) from all pneumoconioses (including 222 (1.2%) from CWP and 10 (0.1%) from silicosis). Significantly elevated cause-specific mortality was determined for NMRD, COPD, chronic bronchitis, and emphysema when the cohort mortality was compared to that of an external reference group. There was not a pneumoconiosis-specific mortality in the comparison group. There was less than expected mortality from tuberculosis (TB), all cancer, lung cancer, and cardiovascular disease, including acute pulmonary heart disease. Miller *et al.* (2007) observed elevated, but not statistically significant, mortality for all causes and ischemic heart disease. Miners also had significantly elevated deaths from stomach cancer with 323 deaths (1.8%).

2. Chronic Obstructive Pulmonary Disease (COPD)

a. Pulmonary Function

The feature common to obstructive pulmonary diseases is obstructed ventilation. This physiological defect is

measured with a spirometer. The specific parameter is the Forced Expiratory Volume in one second (FEV_1). This is a measure of the amount of air a person can forcibly exhale in one second. If it is less than a predicted value by 80% or by 65%, it indicates impairment or serious impairment. The FEV_1 varies with a person's age, height, gender, and ethnicity. Formulas based on surveys of normal healthy adults provide formulas for predicting a "normal" value. It is a simple and inexpensive test to perform and was used in many surveys and studies, as discussed below.

Peng *et al.* (2005) and Wang ML *et al.* (2005) compared pulmonary function in young miners exposed to coal dust with younger students at a mining technical school over a 3-year period. On average, respirable dust concentrations exceeded MSHA's exposure limit for respirable coal mine dust of 2 mg/m^3. The FEV_1 of the miners showed a significant clinical, though non-linear, decline compared to the controls. Smoking aggravated the effect of dust exposure.

Chinese coal miners with clinically important depressed FEV_1 were compared to other miners with stable pulmonary function (controls). (Wang ML *et al.,* 1999) Miners with impaired function (cases) were more likely to work as a roof bolter, on a longwall section, and at the face. They were also more likely to have been exposed to explosive blasting and to water stored for dust control. Miners in the control group were more likely to have reported using respiratory protection than cases. On longwall sections, nearly twice as many of the controls used respiratory protection than had the miners with decreased FEV_1.

Naidoo *et al.,* (2005) compared lung function of former and current coal miners in South Africa. Cumulative coal dust exposure estimates were derived from historical data maintained by coal companies. The FEV_1 of current miners declined by 1.1 ml/mg-year/m^3 and for former miners, at 2.2 ml/mg-year/m^3. This study found that 2.7% of current miners and 5.7% of former miners had FEV_1 levels less than 65% predicted (the conventional threshold level for determining significant impairment). Ex-miners had a lower average percent predicted pulmonary function than current miners for each cumulative exposure category. Past history of TB contributed to 21% and 14% declines in percent predicted FEV_1 and FVC, respectively. This study confirmed that cross sectional studies of working miners can underestimate the prevalence of disease because of a healthy worker or survivor effect. This implies that estimates of the effects of dust on pulmonary function based on surveys limited to active miners are likely underestimates of the true effect. Miners with greater loss of pulmonary function tend to drop out of the mining workforce.

The study of British miners by Cowie *et al.* (2006) was prompted by the need to study clinically important deficits in pulmonary function in relation to dust exposure in a population of miners that was sufficiently large and representative and whose prior dust exposure was well characterized. This need arose following the recognition that exposure to coal mine dust could impair pulmonary function independently of pneumoconiosis. The aim was to support setting dust standards to prevent functional disability among British miners. This investigation was based on data from more than 7000 miners who participated in the fifth round of the PFR in the late 1970s. In practical terms, the aim of this analysis was to evaluate the association between cumulative dust exposure and functional disability (*i.e.,* breathlessness).

The investigators first evaluated the relationship between FEV_1 and breathlessness and then between FEV_1 and cumulative exposure to dust among relevant other factors (age, height, and smoking). The decline in FEV_1 due to dust was estimated to be between 0.5 and 0.6 ml per gram-hour/m^3. (This finding is not directly applicable to miners in the U.S. because of differences in dust sampling methods.) An exposure-response relationship between dust exposure and reduced pulmonary function was determined.

Wang *et al.* (1997) compared pulmonary function in underground coal miners with that of factory workers in Chongqing, China. They took chest x-rays, performed pulmonary function tests (FEV_1, FVC, and DL_{CO}), and assessed their smoking habits. DL_{CO} (diffusion of carbon monoxide) is an indicator of gas exchange in the lung. Exposure was measured by the miners' occupational histories. The results of the study indicated that pulmonary function was associated with job tenure (and, indirectly, because of exposure to dust) and independently of simple CWP. Pulmonary function was further decreased when simple CWP was present. This study did not provide exposure measurements and there was no consideration of exposure-response relationships.

Bourgkard *et al.* (1998) studied French coal miners with CWP (Categories 0/1 and 1/0) who were employed in underground and surface mines over a 4-year period. They examined the prognostic role of cumulative dust exposure, smoking, respiratory symptoms, lung CT scans, and pulmonary function indices progression to simple CWP category 1/1 or higher. At the first medical examination, miners with wheezing and lower ratio of FEV_1/FVC were more likely to progress to category 1/1 or higher. Thus, this study suggested that such pulmonary function changes for miners with Category 0/1 or 1/0 may indicate an increased risk of progressing to a higher category of simple CWP and therefore should be monitored closely.

Collectively, these studies from the United States, Great Britain, France, China, and South Africa show that cumulative exposure to respirable dust results in loss of pulmonary function. These studies illustrate an exposure-response relationship between coal dust and loss of pulmonary function that is non-linear, with a higher rate of decline early in the miner's exposure. Investigations by Naidoo et al. (2005) also suggest that cross-sectional studies of working miners may underestimate the effects of dust on pulmonary function because they are studies of "healthy workers." This obstructive impairment is likely associated with COPD, such as chronic bronchitis or emphysema (Cohen *et al.,* 2008) and may be an indicator of risk of developing CWP. Minimal recovery of pulmonary function is possible if exposure is reduced. Effects are independent of CWP and of smoking. Miners with CWP typically have worse pulmonary function than miners without CWP and the combined effects of smoking and exposure to dust appear to be additive (Cohen *et al.,* 2008).

b. Chronic Bronchitis

Chronic bronchitis develops slowly, by small increments, and, by definition, "exists" when it reaches a certain stage. It is defined as the presence of a productive cough for most days of a week, at least three months of a year for at least two consecutive years. Emphysema is destruction of lung architecture in the alveolar region resulting in airways obstruction and impaired gas exchange. Asthma is a reactive condition of the airways that is triggered by any of several allergens or other factors. Asthma, chronic bronchitis, and emphysema, have been studied in mining populations (Henneberger and Attfield, 1997; Naidoo *et al.,* 2006; Wang *et al.,* 1997 and 2007; Coggon and Taylor, 1998; Beeckman *et al.,* 2001; Ross and Murray, 2004; Kuempel *et al.,* 2009a and b; Boschetto *et al.,* 2006; Green *et al.,* 1998b). As

indicated by these studies, the exposure of miners to respirable coal mine dust places them at increased risk of developing obstructive pulmonary diseases. Furthermore, these diseases may occur in miners with or without CWP or PMF and independent of smoking history.

COPD is characterized by airflow limitations (usually as reduced FEV_1) that are not fully reversible. This limitation in airflow is both progressive and associated with abnormal inflammatory response of lung tissue to noxious agents, such as coal dust. As in simple CWP or PMF, a miner with COPD may have a variety of respiratory symptoms (*e.g.,* shortness of breath, cough, sputum or phlegm production, and wheezing) and may be at increased risk of acquiring infections (Boschetto *et al.,* 2006). COPD is associated with increased premature mortality (Hansen *et al.,* 1999; Meijers *et al.,* 1997), especially in association with pneumoconiosis (Attfield and Keumpel, 2008). The occurrence of chronic bronchitis and of decreased FEV_1 is closely related, but one does not always occur with the other. A miner with bronchitis, especially in early stages, will not necessarily have reduced FEV_1 and a miner with reduced FEV_1 may have any of several conditions (*e.g.,* asthma, emphysema, or an infection), bronchitis among them. There have been many studies evaluating this relationship.

Henneberger and Attfield (1997) evaluated data from pulmonary function tests and standardized health questionnaires of 1,866 male miners who were either in the first round of NSCWP testing in 1969–1971 or the second round in 1972–1975. These miners were followed-up in the fourth round (1985–88). A common finding in their study was an increase in respiratory symptoms, such as chronic bronchitis, shortness of breath, and wheezing. These symptoms were associated with cumulative dust exposure.

An international team of researchers studied respirable coal dust exposure and respiratory symptoms in former and current South African coal miners (Naidoo *et al.* 2006). Ex-miners had significantly more respiratory symptoms—cough and phlegm production, wheezing, breathlessness when dressing—than current miners. The authors attributed this difference to the "healthy worker effect" as noted by Naidoo (above). Smoking and past tuberculosis history were associated with wheezing and breathlessness when walking or dressing.

Wang *et al.* (2007) investigated the relationship between early rapid decline in FEV_1 and symptoms of bronchitis among newly hired Chinese miners exposed to high levels of respirable dust (average 8.9 mg/m^3). In a three year study, symptoms of bronchitis were elevated after 11 months. After 24 months, the miners who developed symptoms of bronchitis and who smoked had lost significantly more FEV_1 (235 ml v 96 ml) than miners without symptoms and who did not smoke. In both groups, loss of pulmonary function was early and rapid with some recovery after two years.

In a review of chronic obstructive pulmonary disease occurring in coal miners, Coggon and Newman-Taylor (1998) and Newman-Taylor and Coggon (1999) summarized the evidence that the best estimate of the average loss of FEV_1 in miners exposed to coal mine dust is 0.76 ml/gram-hour/m^3. (This rate is not applicable to miners in the U.S. because of differences in measuring dust concentration.) This loss is independent of the development of chronic bronchitis, and is in addition to the effect of smoking. The British PFR studies indicate an increase in the prevalence of severe loss of pulmonary function and mortality from COPD in miners heavily exposed to coal dust. Miller *et al.* (1997) reported 20% increased risk of chronic bronchitis in the British mining cohort, compared to the disease occurrence in the general population.

Using PFR data, Hurley *et al.* (2002) calculated estimates of dust-related disease in British coal miners at exposure levels common in the late 1980s, and related the impairment of pulmonary function and the development of chronic bronchitis in these coal miners to their cumulative dust exposure. Estimates of disease were calculated based on the results of a random sample of 895 miners who worked at 10 mines. Their average dust exposure was 200 gram-hour/m^3 and their average age was 49. The authors estimated that by the age of 58, 5.8% of these men would report breathlessness for every 100 gram-hour/m^3 dust exposure. The authors also estimated the prevalence of chronic bronchitis at age 58 would be 4.0% per 100 gram-hour/m^3 of dust exposure. These miners averaged over 35 years of tenure in mining and a cumulative dust exposure of 132 gram-hour/m^3 respirable dust exposure.

Beeckman *et al.* (2001) studied U.S. coal miners who had participated in the NSCWP surveys after 1976. The purpose of this study was to determine the long-term health effects associated with rapid decline in FEV_1. They selected cases with accelerated loss in FEV_1 and compared them to miners matched on age, height, smoking habits and initial FEV_1. (Accelerated decline was > 60 ml per year compared to the matched referent miner.) These miners presented multiple adverse respiratory symptoms related to their dust exposure. Surveys were completed by the miners or, if the miner had died, by his or her next of kin. The survey collected information on occupational, health, and smoking history. The follow-up period for this cohort of miners was between 10 and 18 years. Researchers found that accelerated loss of pulmonary function was associated with dust exposure. There were no significant differences between the two mining groups in relation to age, height, weight, or pack-years of smoking.

Compared to miners who did not have accelerated decline in FEV_1, smoking and nonsmoking miners who experienced accelerated declines in FEV_1 subsequently developed more frequent respiratory symptoms of cough, phlegm production, grades II and III dyspnea, and wheezing. They also reported more frequent chest illnesses (chronic bronchitis and self-reported asthma and emphysema). A larger proportion of this group of miners left mining before retirement due to their chest illnesses. They were twice as likely to die due to cardiovascular or nonmalignant respiratory disease and three times as likely to die due to COPD as were their colleagues with more stable pulmonary function. Beeckman et al. concluded that rapid decline in FEV_1 among miners was associated with increased morbidity and mortality and could be used to facilitate early intervention to preserve pulmonary function.

c. Emphysema

Emphysema is the destruction of the normal structure of the lung and results in impaired gas exchange and airways obstruction. There are three main morphological types of pulmonary emphysema: centriacinar, panacinar, and paraseptal. Centriacinar (centrilobular) emphysema occurs when focal dilations occur around respiratory bronchioles. These dilations occur throughout the upper parts of the lung among normal lung tissue. The other main form of emphysema is panacinar (panlobular) where tissue loss and damage occurs in the terminal bronchioles and is more likely to affect the lower half of the lungs. Another form of emphysema that is less common is paraseptal (scar) emphysema where bullae occur on the lung edges. If these

bullae rupture, a pneumothorax (collapsed lung) could result. These types (and sub-types) can only be identified at autopsy. In the living miner, one cannot easily identify these types and the diagnosis is made on clinical findings, one of which is reduced FEV_1.

Autopsy studies have determined that centriacinar emphysema in coal miners is associated with the amount of dust retained in lung tissue at the time of death (lung burden), with measured dust exposures, associated with CWP, and with years worked underground.

The objective of a study by Kuempel *et al.* (2009a) was to determine whether lifetime exposure to cumulative respirable coal mine dust resulted in clinically important emphysema. This group reviewed the medical records and questionnaire responses of 616 coal miners and 106 non-miners autopsied during 1957 to 1978. Clinically relevant emphysema was defined at two levels, FEV_1 less than 80% and FEV_1 less than 65% of predicted normal values. The cohort average cumulative coal dust exposure was 87 mg-year/m^3 and the cohort average cigarette smoking was 42 pack-years. Study results indicate that the odds ratio of developing emphysema associated with FEV_1 less than 80% was 2.30 (95% CL: 1.46–3.64) at the cohort average cumulative coal dust exposure of 87 mg/m^3·yr and 1.95 (1.39–2.79) at the cohort average smoking level. For emphysema associated with FEV_1 less than 65% of predicted, the respective odds ratios were 2.39 (1.51–3.83) for dust exposure and 1.52 (1.10–2.13) for smoking. The odds ratios for developing clinically-relevant emphysema (*i.e.,* associated with FEV_1 less than 80% or less than 65%) for cumulative coal dust exposure (2.30 or 2.39, respectively) were elevated, though not significantly different than the odds ratios for cigarette smoking (1.95 or 1.52, respectively) at the cohort mean values. Never-smoking coal miners had a significant risk of developing clinically-relevant severe emphysema. Thus exposure to coal mine dust and smoking were each predictors of clinically relevant emphysema. Effects appear to be additive.

Green *et al.* (1998a) and Kuempel *et al.* (2009b) further analyzed the autopsy data from 722 coal miners and non-miners in the U.S. described above. Green *et al.* studied the different types of emphysema and various factors, such as lung dust burden, associated with its occurrence; while Kuempel *et al.* determined the independent effects of smoking and dust exposure on the different grades of emphysema. Green *et al.* found that the severity of emphysema was associated with time worked in mining, level of pneumoconiosis, and the lung burden of coal dust. Centriacinar emphysema (including focal emphysema) was the predominant form associated with coal mine dust exposure but that almost all forms of emphysema were associated with coal mining. Senile emphysema was more commonly found in the non-miner controls. As expected, smoking was also associated with all types of emphysema in this study population. Kuempel *et al.* found that emphysema severity was significantly elevated in coal miners compared with non-miners regardless of smoking history. Cumulative exposure to respirable coal mine dust or coal dust lung burden significantly predicted emphysema severity in models that controlled for smoking, age at death, and race. Both Green *et al.* (1998a) and Kuempel *et al.* (2009b) determined that smoking and coal dust exposure had an additive effect on the occurrence of emphysema in this cohort.

3. Coal Workers Pneumoconiosis (CWP)

a. Simple Coal Workers' Pneumoconiosis (Simple CWP)

In a study of miners who participated in round six (1990–1995) of the CWXSP, Althouse *et al.* (1998) found an average prevalence rate of 2.2% for simple CWP category 1 among the 8,210 miners who reported beginning work in underground coal mines in 1973 or later. Miners who reported other prior dusty work were excluded from the analysis. The Althouse *et al.* (1998) study did not include estimates of exposure concentration, but the prevalence rates were shown to increase with tenure in mining (up to 22 years).

Wang *et al.* (1999b) studied a mining population in China (described above). On average, miners with CWP worked over 22 years underground while those without CWP worked 15 years underground. Miners with CWP had significant reductions in pulmonary function parameters, and diffusing capacity for carbon monoxide after adjustment of smoking and working underground. Miners with CWP had significantly more respiratory symptoms, including emphysema, than miners without CWP after adjustment for age, smoking, and years working underground. Simple CWP was found to be an independent contributor to pulmonary function and to increased risk of respiratory symptoms. Reduction of FVC and diffusing capacity are thought to reflect CWP-related interstitial fibrosis. Miners that developed chronic bronchitis and emphysema had reductions in FEV_1 and FEV_1/FVC. These pulmonary effects were associated with years of coal mine dust exposure.

Bourgkard et al. (1998), described above, conducted a study of French underground coal miners between 1990 and 1994. Miners in the case group had significantly higher mean profusion scores (micronodules, nodules, and other lung abnormalities) as determined by CT scans. They also had significantly more wheezing and dyspnea than either of the control groups. Miners with CWP also had significantly lower pulmonary function test results including FEV_1/FVC, MMEF (maximal mid-expiratory flow), and FEF 25% (maximal forced expiratory flow at 25% of vital capacity). This study found a significant association between cumulative dust exposure and worsening chest x-ray (*i.e.,* increase in reader-designated category signifying progression of simple CWP). In addition, they found that miners with pneumoconiosis, wheezing, decreased pulmonary function, and high cumulative dust exposure at the first medical examination were those most likely to show worsening on their chest x-rays four years later.

Love *et al.* (1997) reported on occupational exposures and the health of British opencast (*i.e.,* surface or strip) coal miners. They studied a group of approximately 1,200 miners who were employed at sites in England, Scotland, and Wales. The mean age of the men was 41 years; many had worked in the mining industry since the 1970s. To determine dust exposure levels, full-shift personal samples were collected. Most were respirable dust samples which were collected using Casella cyclones according to the procedures described by the British Health and Safety Executive. Thus, exposure determinations would be comparable to exposure determinations obtained in U.S. surface coal mines since both measure respirable dust according to the British Medical Research Council criteria. These investigators found a doubling in the relative risk of developing profusion of simple CWP category 0/1 for every 10 years of work in the dustiest jobs in surface mines. These coal dust exposures were under 1 mg/m^3.

Naidoo *et al.* (2004) in the initial analysis of the data collected on South African coal miners (see above) reported a significant trend in the development of pneumoconiosis in current miners as cumulative dust exposures increased from low (0.62–20.10 milligram-year per cubic meter of air (mg-yr/m^3)) through medium (20.11–72.77 mg-yr/m^3) to high

(72.78 to 258.70 mg-yr/m^3) levels. Miners diagnosed with an average CWP profusion of greater than 1/0 had significantly more cumulative dust exposure of 115 mg.years/m^3 as compared to miners without CWP who had dust exposure of 57.72 mg-yr/m^3. The authors reported that miners with CWP profusion of greater than 1/0 also had lower mean percent predicted pulmonary function.

Lin *et al.* (2001) studied 227 former and current miners who showed evidence of CWP on x-ray. These miners were evaluated at two medical clinics in Taiwan from June 1998 to February 2000 for the effect of CWP on respiratory function. Each subject received a medical examination and included a self-administered questionnaire to collect demographic, occupational, and health history. Subjects were classified according to their CWP radiological category (0–3) and the presence (52.9%) or absence (47.1%) of airway obstruction, defined as having a normal FVC and FEV_1. These two groups were similar in regard to age, body size, and cumulative exposure to coal dust and smoking. There was significant progression of functional pulmonary impairment in men with category 2 or 3 CWP, in both the obstructed as well as unobstructed group.

Smith and Leggat (2006) studied pneumoconiosis mortality in Australian coal miners by examining 24 years of national mortality data (1979–2002). These researchers found that 6% of these cases died due to CWP. The prevalence was about 0.5 CWP deaths/million population in 1979–1981. Prevalence increased during the period 1988–1990 to about 0.7 CWP deaths/million population. It declined to about 0.4 CWP deaths/million during the 1994–1996 time period. It remained at this level through 2002.

b. Rapidly Progressive CWP and Progressive Massive Fibrosis (PMF)

PMF is associated with decreased pulmonary function and increased premature mortality. It is also associated with increases in respiratory symptoms such as chest tightness, cough, and shortness of breath. Miners with PMF also are at increased risk of acquiring infections and pulmonary tuberculosis. Finally, miners with PMF are at an increased risk of right-side heart failure (*i.e., cor pulmonale*) (68 FR 10784).

Researchers determined that cases of rapidly progressive CWP are sentinel health events. These cases indicate inadequate prevention measures in specific regions. As reported above, Antao *et al.* (2005) identified a total of 886 cases of CWP among 29,521 miners examined from 1996 to 2002 in the CWXSP. CWP progression was evaluated in 783 of these miners; 277 (35.4%) were cases of rapidly progressive CWP, including 41 with PMF. The miners with rapidly progressive CWP were younger than miners without rapid progression, worked in smaller mines, and reported longer mean tenure in jobs involving work at the face of the mine. Many of these cases of rapidly progressive CWP developed in miners from eastern Kentucky and western Virginia.

In a review, Soutar et al. 2004, reported on exposure-response relationships that have been derived using the PFR data for category 2 CWP, PMF, chronic bronchitis (breathlessness), clinically important deficits of pulmonary function (FEV_1), and category II silicosis. Risks for CWP and PMF are based on over 50,000 observations collected over 25 years. Pulmonary function results are based on a study of 7,000 miners. A threefold increase in the odds of a clinically-important deficit in pulmonary function was associated, on average, with a 0.993 liter FEV_1 deficit from predicted at the same average exposure level. Reductions in dust levels to protect against pneumoconiosis would protect similarly exposed miners from this significant pulmonary functional deficit.

Yeoh and Yang (2002) studied PMF in current and ex-coal miners from October 1998 to February 2000 who were medically examined at clinics in Taiwan. Miners were between 45 and 76 years of age and had between 2 and 42 years dust exposure in coal mines. A non-mining control population of healthy male Taiwanese over the age of 40 was selected. Data from 86 miners with PMF and the controls were included in the final analysis. These miners had worked as rock drillers (n = 65), face workers (n = 17), and general laborers (n = 4). Average duration of work underground was 28.6 years. Miners were shorter, weighed less, but smoked more than the controls. These miners had significantly reduced pulmonary function as compared to healthy controls. Miners were diagnosed as having either PMF Category A (n = 45), PMF Category B (n = 32), or PMF Category C (n = 9). Pulmonary function testing indicated that 51 of these miners presented with an obstructive pulmonary disorder, while 17 presented with a restrictive disorder, 11 had a mixed functional abnormality, and 7 had normal lung function. Smoking and nonsmoking miners had comparable reductions in FEV_1 and FVC measurements. Smokers also showed a higher degree of airway obstruction. Similar restrictive, obstructive, or mixed patterns of respiratory impairments have been observed in American coal miners (Cohen *et al.* 2008).

Kuempel *et al.* (1997) estimated excess (exposure-attributable) prevalence of simple CWP and PMF (*i.e.,* number of cases of disease present in a population at a specified time, divided by the number of persons in the population at that specified time). PMF excess risk point estimates ranged from 1/1,000 to 167/1,000 among miners exposed at the existing MSHA standard for respirable coal mine dust. These estimates were based upon dust exposure that occurred over a miner's working lifetime (*e.g.,* 8 hours per day, 5 days a week, 50 weeks per year, over a period of 45 years). Actual occupational lifetime exposure may be more, due to extended work shifts and work weeks. The point estimates of PMF presented by Kuempel et al. (1997) were related to coal rank, where higher estimates (*e.g.,* 167/1,000) were obtained for high-rank coal (anthracite coal) and somewhat lower estimates were obtained for medium/low rank bituminous coal (*e.g.,* 21/1,000). Within each coal rank, the estimates of simple CWP cases were at least twice as high as those for PMF (*e.g.,* 167/1,000 PMF vs. 380/1,000 simple CWP).

In summary, studies confirm that the risk of PMF increases with increasing category of simple CWP. The risk of PMF increases with increasing cumulative exposure, regardless of the initial category of simple CWP. This indicates that reducing dust exposures is a more effective means of reducing the risk of PMF than reliance on detection of simple CWP.

D. Conclusion

The premature morbidity and mortality related to pulmonary disease in coal miners affect not only the miners and their families, but also the companies they work for and the communities they live in. The serious nature of one of these diseases, pneumoconiosis, was stated in the Coal Act as part of the justification for lowering the coal dust standard to 2 mg/m^3.

The extent of knowledge on how coal dust causes adverse pulmonary effects has evolved greatly in the 31 years since the Coal Act was signed into law. Though exposures have been reduced, this review of the literature indicates that miners are still suffering unacceptable levels of disease. Under the existing standards, miners are still at increased risk of developing adverse effects such as pulmonary function

deficits, obstructive and restrictive diseases including chronic bronchitis, COPD, emphysema, and simple CWP and PMF from a working lifetime exposure to respirable coal mine dust.

The knowledge and methods for preventing these occupationally-related diseases is known. The proposed rule would lower the concentration limit and include other important provisions necessary to reduce miners' exposure. Medical monitoring methods, such as pulmonary function testing, can be used to detect reductions in pulmonary function over time before CWP develops. Such affected miners can be protected from further deterioration by common industrial hygiene practices such as engineering controls and respiratory protection.

V. Quantitative Risk Assessment

Below is a summary of the quantitative risk assessment (QRA) prepared for this rulemaking. The QRA has been peer reviewed by independent scientific experts at NIOSH and OSHA. The full text of the QRA and the peer reviewers' reports can be accessed electronically at *http://www.msha.gov/regs/QRA/CoalDust2010.pdf.*

The QRA addresses three questions related to MSHA's proposed respirable coal mine dust rule: (1) Whether potential health effects associated with existing exposure conditions constitute material impairments to a miner's health or functional capacity; (2) whether existing exposure conditions and compliance approaches place miners at a significant risk of incurring any of these material impairments; and (3) whether the proposed rule has the potential to substantially reduce those risks.

After summarizing respirable coal mine dust (RCMD) measurements for miners in various occupational categories, Part 1 of the QRA shows that exposures at existing levels are associated with coal workers pneumoconiosis (CWP), chronic obstructive pulmonary disease (COPD) including severe emphysema, and death due to non-malignant respiratory disease (NMRD). All of these outcomes constitute material impairments to a miner's health or functional capacity.

Part 2 of the QRA analyzes and quantifies the excess risk of miners' incurring CWP or COPD, or dying due to NMRD, after 45 years of full-shift occupational exposure at levels currently observed in various exposure categories. Miners having different occupations and working at different locations face significantly different levels of RCMD exposure. In every exposure category, including clusters of occupational environments showing the lowest average dust concentrations, current exposure conditions place miners at a significant risk of incurring each of the material impairments considered.

Part 3 of the QRA projects the risk of material impairments after the proposed exposure limit is applied to each shift. Although significant risks would remain in every exposure category, the proposed rule would substantially reduce the risks of CWP, severe emphysema, and NMRD mortality attributable to RCMD exposures. The proposed rule is projected to have a greater impact on risk for underground miners than for surface miners. Surveillance and exposure data have been collected on U.S. underground coal miners for over 40 years; there are few comparable studies on surface coal miners. The QRA shows that surface work locations exceed the proposed exposure limit on relatively few individual shifts and that the proposed rule is projected to have relatively little impact for surface workers who are exposed to average concentrations below 0.5 mg/m^3. However, the data also show that certain surface occupations are exposed to concentrations of respirable dust exceeding the proposed exposure limit.

Table 28 of the QRA contains the projected reduction in these risks for each occupational category. For progressive massive fibrosis (PMF, the most severe stage of CWP considered), projected improvements for underground workers at age 73 range from a reduction of 4 excess cases per thousand loading machine operators to a reduction of 75 excess cases per thousand cutting machine operators. For severe emphysema at age 73, the range of projected improvements for underground workers runs from a reduction of 3 cases per thousand white loading machine operators to a reduction of 50 cases per thousand non-white cutting machine operators. Again for underground workers, the range of projected improvements in the risk of death due to NMRD by age 85 is projected to run from 1 excess case per thousand loading machine operators to 15 excess cases per thousand cutting machine operators. For surface workers, reductions are projected of up to 3 excess cases of PMF per thousand cleaning plant operators and utility men, 8 excess cases of severe emphysema per thousand non-white cleaning plant operators and utility men, and 3 excess cases of NMRD mortality by age 85 per thousand laborers.

The proposed rule would adjust dust concentration limits downward to compensate for exposure hours in excess of 8 hours per shift, change the definition of normal production shift, and require the use of CPDMs. These proposed provisions would further reduce remaining risk for such miners and result in improvements that would be greater than those shown in Table 28. For a complete discussion of the benefits of the proposed rule, see Chapter III of the PREA.

VI. Derivation and Distribution Table

Derivation Table

The following derivation table lists: (1) Each section number of the proposed rule and (2) the section number of the existing standard from which it is derived.

DERIVATION TABLE

Proposed section	Existing section
70	70
70.1	70.1
70.2	70.2, 70.206, 70.207(f), new
70.100	70.100
70.100(a)	70.100(a), new
70.100(b)	70.100(b), new
70.101	70.101
70.101(a)	70.101, new
70.101(b)	70.101, new
70.201	70.201
70.201(a)	70.201(a), new
70.201(b)	new
70.201(c)	new
70.201(d)	new
70.201(e)	70.201(b), new
70.201(e)(1)	new
70.201(e)(2)	new
70.201(f)	new
70.201(g)	new
70.201(h)	70.201(c), new
70.201(i)	new
70.201(j)	new
70.201(k)	new
70.202	70.202
70.202(a)	70.202(a)
70.202(b)	70.202(b), new
70.202(c)	new
70.202(d)	new
70.203	70.203
70.203(a)	70.203(a)
70.203(b)	70.203(b), new
70.203(c)	new
70.203(d)	new
70.204	70.204
70.204(a)	70.204(a), new
70.204(b)	70.204(b), new
70.204(c)	70.204(d), new
70.204(c)(1)	70.204(d)(2), new
70.204(c)(2)	70.204(d)(3), new
70.204(c)(3)	70.204(d)(4), new
70.204(c)(4)	70.204(d)(5), new
70.204(c)(5)	70.204(d)(1), new
70.204(d)	new
70.204(e)	70.204(e)
70.205	70.205
70.205(a)	70.205(a), new

DERIVATION TABLE—Continued

Proposed section	Existing section
70.205(b)	70.205(b)
70.205(b)(1)	70.205(b), 70.205(d)
70.205(b)(2)	70.205(c), new
70.205(c)	new
70.206	new
70.207	70.207, new
70.207(a)	70.207(a), new
70.207(b)	70.207(e)
70.207(b)(1)	70.207(e)(1)
70.207(b)(2)	70.207(e)(2)
70.207(b)(3)	70.207(e)(3)
70.207(b)(4)	70.207(e)(4)
70.207(b)(5)	70.207(e)(5)
70.207(b)(6)	70.207(e)(6)
70.207(b)(7)	70.207(e)(7)
70.207(b)(8)	70.207(e)(8)
70.207(b)(9)	70.207(e)(9)
70.207(b)(10)	70.207(e)(10)
70.207(c)	new
70.207(c)(1)	70.207(b), new
70.207(c)(2)	new
70.207(d)	70.207(d), new
70.207(e)	new
70.207(f)	70.207(c)
70.207(g)	70.201(d), new
70.207(g)(1)	70.300, new
70.207(g)(2)	new
70.207(g)(3)	70.201(d), new
70.207(h)	new
70.207(i)	new
70.207(i)(1)	new (70.300)
70.207(i)(2)	new
70.207(i)(3)	new
70.208	new
70.208(a)	70.207(a), new
70.208(a)(1)	70.207(a), new
70.208(a)(2)	70.207(a), new
70.208(b)	70.207(e), new
70.208(b)(1)	70.207(e)(1), new
70.208(b)(2)	70.207(e)(2), new
70.208(b)(3)	70.207(e)(3), new
70.208(b)(4)	70.207(e)(4), new
70.208(b)(5)	70.207(e)(5), new
70.208(b)(6)	70.207(e)(6), new
70.208(b)(7)	70.207(e)(7), new
70.208(b)(8)	70.207(e)(8), new
70.208(b)(9)	70.207(e)(9), new
70.208(b)(10)	70.207(e)(10), new
70.208(c)	new
70.208(d)	new
70.208(e)	new
70.208(f)	70.201(d), new
70.208(f)(1)	70.300, new
70.208(f)(2)	70.201(d), new
70.208(f)(3)	new
70.208(f)(4)	new
70.208(f)(5)	new
70.208(g)	new
70.208(g)(1)	new (70.300)
70.208(g)(2)	new
70.208(g)(3)	new
70.208(g)(4)	new
70.208(h)	new
70.209	70.208, new
70.209(a)	70.208(a), new
70.209(b)	new
70.209(b)(1)	70.208(b), new
70.209(b)(2)	new
70.209(c)	new
70.209(d)	70.208(d)
70.209(e)	70.201(d),new
70.209(e)(1)	70.300, new

DERIVATION TABLE—Continued

Proposed section	Existing section
70.209(e)(2)	new
70.209(e)(3)	70.201(d),new
70.209(f)	new
70.209(g)	new
70.209(g)(1)	70.300, new
70.209(g)(2)	new
70.209(g)(3)	new
70.209(g)(4)	new
70.209(h)	70.208(f)
70.210	70.209
70.210(a)	70.209(a)
70.210(b)	70.209(b)
70.210(c)	70.209(c), new
70.210(d)	70.209(d)
70.210(e)	70.209(e)
70.210(f)	new
70.211	70.210
70.211(a)	70.210(a)
70.211(a)(1)	70.210(a)(1)
70.211(a)(2)	70.210(a)(2), new
70.211(a)(3)	70.210(a)(3), new
70.211(a)(4)	70.210(a)(4), new
70.211(a)(5)	70.210(a)(5)
70.211(a)(6)	70.210(a)(6)
70.211(b)	70.210(b)
70.211(c)	new
70.211(c)(1)	new
70.211(c)(1)(i)	new (70.210(a)(1))
70.211(c)(1)(ii)	new (70.210(a)(2))
70.211(c)(1)(iii)	new (70.210(a)(3))
70.211(c)(1)(iv)	new
70.211(c)(1)(v)	new (70.210(a)(5))
70.211(c)(1)(vi)	new (70.210(a)(6))
70.211(c)(1)(vii)	new
70.211(c)(1)(viii)	new
70.211(c)(2)	new
70.211(c)(3)	70.210(b), new
70.212	70.220
70.212(a)	70.220(a), new
70.212(b)	70.220(b)
70.212(c)	new
71	71
71.1	71.1
71.2	71.2, 71.206, new
71.100	71.100
71.100(a)	71.100
71.100(b)	new
71.100(c)	new
71.100(d)	new
71.101	71.101
71.101(a)	71.101, new
71.101(b)	71.101, new
71.201	71.201
71.201(a)	71.201(a), new
71.201(b)	71.201(b), new
71.201(b)(1)	new
71.201(b)(2)	new
71.201(c)	new
71.201(d)	new
71.201(e)	71.201(c), new
71.201(f)	71.201(e)
71.201(g)	new
71.201(h)	new
71.202	71.202
71.202(a)	71.202(a)
71.202(b)	71.202(b), new
71.202(c)	new
71.202(d)	new
71.203	71.203
71.203(a)	71.203(a)
71.203(b)	71.203(b), new
71.203(c)	new

DERIVATION TABLE—Continued

Proposed section	Existing section
71.203(d)	new
71.204	71.204
71.204(a)	71.204(a), new
71.204(b)	71.204(b), new
71.204(c)	71.204(d), new
71.204(c)(1)	71.204(d)(2), new
71.204(c)(2)	71.204(d)(3), new
71.204(c)(3)	71.204(d)(4), new
71.204(c)(4)	71.204(d)(5), new
71.204(c)(5)	71.204(d)(1), new
71.204(d)	new
71.204(e)	71.204(e)
71.205	71.205
71.205(a)	71.205(a), new
71.205(b)	71.205(b), new
71.205(b)(1)	71.205(b)
71.205(b)(2)	71.205(c)
71.205(c)	new
71.206	new
71.207	71.208, new
71.207(a)	71.208(a), new
71.207(b)	new
71.207(c)	new
71.207(d)	71.208(h), new
71.207(e)	71.208(g)
71.207(f)	71.208(e), new
71.207(g)	71.208(f), new
71.207(h)	new
71.207(h)(1)	71.208(b), new
71.207(h)(2)	new
71.207(i)	new
71.207(j)	71.208(d)
71.207(k)	71.201(d), new
71.207(k)(1)	new (70.300)
71.207(k)(2)	new
71.207(k)(3)	71.201(d), new
71.207(l)	71.300, new
71.207(m)	71.208(c), new
71.207(n)	71.208(c), new
71.207(n)(1)	71.208(c), new
71.207(n)(2)	new
71.208	71.209
71.208(a)	71.209(a)
71.208(b)	71.209(b)
71.208(c)	71.209(c), new
71.208(d)	71.209(d)
71.208(e)	71.209(e)
71.208(f)	new
71.209	71.210
71.209(a)	71.210(a)
71.209(a)(1)	71.210(a)(1)
71.209(a)(2)	71.210(a)(2)
71.209(a)(3)	71.210(a)(3), new
71.209(a)(4)	71.210(a)(5)
71.209(b)	71.210(b), new
71.209(c)	new
71.209(c)(1)(i)	new (71.210(a)(1))
71.209(c)(1)(ii)	new (71.210(a)(2))
71.209(c)(1)(iii)	new (71.210(a)(3))
71.209(c)(1)(iv)	new (71.210(a)(5))
71.209(c)(1)(v)	new
71.209(c)(1)(vi)	new
71.209(c)(2)	new (71.210(b))
71.210	71.220
71.210(a)	71.220(a), new
71.210(b)	71.220(b)
71.210(c)	new
71.300	71.300
71.300(a)	71.300(a), new
71.300(a)(1)	new
71.300(a)(2)	new
71.300(a)(3)	new

DERIVATION TABLE—Continued

Proposed section	Existing section
71.300(a)(4)	new
71.300(b)	71.300(b)
71.301	71.301
71.301(a)	71.301(a)
71.301(a)(1)	71.301(a)(1), new
71.301(a)(2)	71.301(a)(2)
71.301(b)	71.301(b), new
71.301(c)	71.301(c)
71.301(d)	new
71.301(d)(1)	new
71.301(d)(2)	new
71.301(d)(3)	71.301(d), new
71.301(e)	71.301(e)
72.100	new
72.700	new (70.300)
72.700(a)	new (70.300)
72.700(b)	new
72.700(c)	new
72.701	new (70.305)
72.800	new
75.325(a)(2)	75.325(a)(2), new
75.332(a)(1)	75.332(a)(1), new
75.350(b)(3)(i)	75.350(b)(3)(i)
75.350(b)(3)(i)(A)	75.350(b)(3)(i)
75.350(b)(3)(i)(B)	75.350(b)(3)(i), new
75.350(b)(3)(ii)	75.350(b)(3)(ii), new
75.362(a)(2)	75.362(a)(2), new
75.362(g)(2)	75.362(g)(2), new
75.362(g)(2)(i)	75.362(g)(2), new
75.362(g)(2)(ii)	new
75.362(g)(3)	new
75.362(g)(4)	new
75.371(f)	75.371(f), new
75.371(f)(1)	new
75.371(f)(2)	new
75.371(f)(3)	new
75.371(f)(4)	new
75.371(j)	75.371(j), new
75.371(t)	75.371(t)
90	90
90.1	90.1, new
90.2	90.2, 90.206, new
90.3	90.3
90.3(a)	90.3(a), new
90.3(b)	90.3(b)
90.3(c)	90.3(c)
90.3(d)	90.3(d), new
90.3(e)	90.3(e), new
90.3(f)	90.3(f)
90.100	90.100
90.100(a)	90.100
90.100(b)	new
90.101	90.101
90.101(a)	90.101, new
90.101(b)	90.101, new
90.102	90.102
90.102(a)	90.102(a), new
90.102(b)	90.102(b)
90.102(c)	90.102(c)
90.103	90.103
90.103(a)	90.103(a)
90.103(b)	90.103(b)
90.103(c)	new
90.103(d)	90.103(c)
90.103(e)	90.103(d)
90.103(f)	90.103(e)
90.103(g)	90.103(f)
90.104	90.104
90.104(a)	90.104(a)
90.104(a)(1)	90.104(a)(1)
90.104(a)(2)	90.104(a)(2), new
90.104(a)(3)	90.104(a)(3), new

DERIVATION TABLE—Continued

Proposed section	Existing section
90.104(b)	90.104(b)
90.104(c)	90.104(c)
90.201	90.201, new
90.201(a)	90.201(a), new
90.201(b)	90.201(b), new
90.201(b)(1)	new
90.201(b)(2)	new
90.201(c)	90.201(f)
90.201(c)(1)	90.201(f)(1)
90.201(c)(2)	90.201(f)(2)
90.201(c)(3)	90.201(f)(3)
90.201(d)	new
90.201(e)	90.201(e)
90.201(f)	new
90.201(g)	90.201(c), new
90.201(h)	new
90.201(i)	new
90.202	90.202
90.202(a)	90.202(a)
90.202(b)	90.202(b), new
90.202(c)	new
90.202 (d)	new
90.203	90.203
90.203(a)	90.203(a)
90.203(b)	90.203(b), new
90.203(c)	new
90.203(d)	new
90.204	90.204
90.204(a)	90.204(a), new
90.204(b)	90.204(b), new
90.204(c)	90.204(d), new
90.204(c)(1)	90.204(d)(2), new
90.204(c)(2)	90.204(d)(3), new
90.204(c)(3)	90.204(d)(4), new
90.204(c)(4)	90.204(d)(5), new
90.204(c)(5)	90.204(d)(1), new
90.204(d)	new
90.204(e)	90.204(e)
90.205	90.205
90.205(a)	90.205(a), new
90.205(b)	90.205(b)
90.205(b)(1)	90.205(b), 90.205(d)
90.205(b)(2)	90.205(c), new
90.205(c)	new
90.206	new
90.207	90.207, new
90.207(a)	90.207(a)
90.207(a)(1)	90.207(a)(1)
90.207(a)(2)	90.207(a)(2), new
90.207(a)(3)	90.207(a)(3)
90.208	90.208, new
90.208(a)	90.208(a), new
90.208(b)	new
90.208(b)(1)	90.208(b), new
90.208(b)(2)	new
90.208(c)	new
90.208(d)	90.208(c)
90.208(e)	90.201(d), new
90.208(e)(1)	new (70.300)
90.208(e)(2)	new
90.208(e)(2)(i)	90.201(d), new
90.208(e)(2)(ii)	new
90.208(f)	new
90.208(g)	new
90.208(g)(1)	new (70.300)
90.208(g)(2)	new
90.208(g)(3)	new
90.209	new
90.209(a)	new
90.209(b)	new
90.209(c)	new
90.209(d)	new

DERIVATION TABLE—Continued

Proposed section	Existing section
90.209(e)	90.201(d), new
90.209(e)(1)	new (70.300)
90.209(e)(2)	90.201(d), new
90.209(e)(3)	90.300(a), new
90.209(e)(4)	new
90.209(e)(5)	new
90.209(e)(6)	new
90.209(f)	new
90.210	90.209
90.210(a)	90.209(a)
90.210(b)	90.209(b)
90.210(c)	90.209(c), new
90.210(d)	90.209(d)
90.210(e)	90.209(e)
90.210(f)	new
90.211	90.210
90.211(a)	90.210(a)
90.211(a)(1)	90.210(a)(1)
90.211(a)(2)	90.210(a)(2), new
90.211(a)(3)	90.210(a)(3), new
90.211(a)(4)	90.210(a)(4), new
90.211(a)(5)	90.210(a)(5)
90.211(a)(6)	90.210(a)(6)
90.211(a)(7)	90.210(a)(7), new
90.211(b)	90.210(b)
90.211(c)	new
90.211(c)(1)	new
90.211(c(1)(i))	90.210(a)(1)
90.211(c)(1)(ii)	90.210(a)(2), new
90.211(c)(1)(iii)	90.210(a)(3), new
90.211(c)(1)(iv)	new
90.211(c)(1)(v)	90.210(a)(5)
90.211(c)(1)(vi)	90.210(a)(6)
90.211(c)(1)(vii)	90.210(a)(7), new
90.211(c)(1)(viii)	new
90.211(c)(1)(ix)	new
90.211(c)(2)	new
90.211(d)	90.210(b), new
90.212	90.220
90.212(a)	90.220 new
90.212(b)	new
90.300	90.300
90.300(a)	90.300(a), new
90.300(b)	90.300(b)
90.300(b)(1)	90.300(b)(1)
90.300(b)(2)	90.300(b)(2), new
90.300(b)(3)	90.300(b)(3), new
90.300(b)(4)	90.300(b)(4)
90.301	90.301
90.301(a)	90.301(a)
90.301(a)(1)	90.301(a)(1), new
90.301(a)(2)	90.301(a)(2)
90.301(b)	90.301(b), new
90.301(c)	90.301(c)
90.301(d)	90.301(d)
90.301(e)	90.301(e)

Distribution Table

The following distribution table lists each section number of the existing standard and status of that section number in the proposed rule.

DISTRIBUTION TABLE

Existing section	Proposed section
70.1	70.1
70.2	70.2 (revised)
70.100	70.100

DISTRIBUTION TABLE

Existing section	Proposed section
70.100(a)	70.100(a)(1)–(a)(4) (revised)
70.100(b)	70.100(b)(1)–(b)(2) (revised)
70.101	70.101(a)–(b) (revised)
70.201	70.201 (revised)
70.201(a)	70.201(a) (revised)
70.201(b)	70.201(e) (revised)
70.201(c)	70.201(h) (revised)
70.201(d)	70.207(g) (revised), 70.208(f) (revised)
70.202	70.202
70.202(a)	70.202(a)
70.202(b)	70.202(b) (revised)
70.202(c)	Removed
70.203	70.203
70.203(a)	70.203(a)
70.203(b)	70.203(b) (revised)
70.203(c)	Removed
70.204	70.204
70.204(a)	70.204(a) (revised)
70.204(b)	70.204(b) (revised)
70.204(c)	Removed
70.204(d)	70.204(c) (revised)
70.204(d)(1)	70.204(c)(5) (revised)
70.204(d)(2)	70.204(c)(1) (revised)
70.204(d)(3)	70.204(c)(2) (revised)
70.204(d)(4)	70.204(c)(3) (revised
70.204(d)(5)	70.204(c)(4) (revised)
70.204(e)	70.204(e)
70.205	70.205
70.205(a)	70.205(a) (revised)
70.205(b)	70.205(b), (b)(1) (revised)
70.205(c)	70.205(b)(2) (revised)
70.205(d)	70.205(b)(1)
70.206	70.2 (revised)
70.207	70.207 (revised)
70.207(a)	70.207(a) (revised)
70.207(b)	70.207(c)(1) (revised)
70.207(c)	70.207(f) (revised)
70.207(d)	70.207(d) (revised)
70.207(e)	70.207(b) (revised)
70.207(e)(1)	70.207(b)(1)
70.207(e)(2)	70.207(b)(2)
70.207(e)(3)	70.207(b)(3)
70.207(e)(4)	70.207(b)(4)
70.207(e)(5)	70.207(b)(5)
70.207(e)(6)	70.207(b)(6)
70.207(e)(7)	70.207(b)(7)
70.207(e)(8)	70.207(b)(8)
70.207(e)(9)	70.207(b)(9)
70.207(e)(10)	70.207(b)(10)
70.207(f)	70.2 (revised) (Mechanized mining unit)
70.208	70.209 (revised)
70.208(a)	70.209(a) (revised)
70.208(b)	70.209(b)(1) (revised)
70.208(c)	70.209(b)(2) (revised)
70.208(d)	70.209(d) (revised)
70.208(e)	70.2 (revised) (Designated area)
70.208(f)	70.209(h)
70.209	70.210
70.209(a)	70.210(a)
70.209(b)	70.210(b)
70.209(c)	70.210(c) (revised)
70.209(d)	70.210(d)
70.209(e)	70.210(e)
70.210	70.211

DISTRIBUTION TABLE

Existing section	Proposed section
70.210(a)	70.211(a) (revised)
70.210(a)(1)	70.211(a)(1)
70.210(a)(2)	70.211(a)(2) (revised)
70.210(a)(3)	70.211(a)(3) (revised)
70.210(a)(4)	70.211(a)(4) (revised)
70.210(a)(5)	70.211(a)(5)
70.210(a)(6)	70.211(a)(6)
70.210(b)	70.211(b)
70.220	70.212
70.220(a)	70.212(a) (revised)
70.220(b)	70.212(b)
70.300	72.700 (revised)
70.305	72.701
71.1	71.1
71.2	71.2 (revised)
71.100	71.100
71.101	71.101 (revised)
71.201	71.201 (revised)
71.201(a)	71.201(a) (revised)
71.201(b)	71.201(b) (revised)
71.201(c)	71.201(e) (revised)
71.201(d)	71.201(k) (revised)
71.201(e)	71.201(f) (revised)
71.202	71.202
71.202(a)	71.201(a)
71.202(b)	71.202(b) (revised)
71.202(c)	Removed
71.203	71.203
71.203(a)	71.203(a)
71.203(b)	71.203(b) (revised)
71.203(c)	Removed
71.204	71.204
71.204(a)	71.204(a) (revised)
71.204(b)	71.204(b) (revised)
71.204(c)	Removed
71.204(d)	71.204(c) (revised)
71.204(d)(1)	71.204(c)(5) (revised)
71.204(d)(2)	71.204(c)(1) (revised)
71.204(d)(3)	71.204(c)(2) (revised)
71.204(d)(4)	71.204(c)(3) (revised)
71.204(d)(5)	71.204(c)(4) (revised)
71.204(e)	71.204(e)
71.205	71.205
71.205(a)	71.205(a) (revised)
71.205(b)	71.205(b), 71.205(b)(1) (revised)
71.205(c)	71.205(b)(2) (revised)
71.206	71.2 (revised)
71.208	71.207 (revised)
71.208(a)	71.207(a) (revised)
71.208(b)	71.207(h)(1)
71.208(c)	71.207(m)
71.208(d)	71.207(j)
71.208(e)	71.207(f) (revised)
71.208(f)	71.207(g) (revised)
71.208(g)	71.207(e)
71.208(h)	71.207(d)
71.209	71.208
71.209(a)	71.208(a)
71.209(b)	71.208(b)
71.209(c)	71.208(c) (revised)
71.209(d)	71.208(d)
71.209(e)	71.208(e)
71.210	71.209
71.210(a)	71.209(a) (revised)
71.210(a)(1)	71.209(a)(1)
71.210(a)(2)	71.209(a)(2)
71.210(a)(3)	71.209(a)(3) (revised)
71.210(a)(4)	Removed
71.210(a)(5)	71.209(a)(4)
71.210(b)	71.209(b) (revised)

DISTRIBUTION TABLE

Existing section	Proposed section
71.220	71.210
71.220(a)	71.210(a) (revised)
71.220(b)	71.210(b)
71.300	71.300
71.300(a)	71.300(a) (revised)
71.300(b)	71.300(b)
71.301	71.301
71.301(a)	71.301(a)
71.301(a)(1)	71.301(a)(1) (revised)
71.301(a)(2)	71.301(a)(2)
71.301(b)	71.301(b) (revised)
71.301(c)	71.301(c)
71.301(d)	71.301(d) (revised)
71.301(e)	71.301(e)
75.325(a)(2)	75.325(a)(2) (revised)
75.332(a)(1)	75.332(a)(1) (revised)
75.350(b)(3)(i)	75.350(b)(3)(i) (revised)
75.350(b)(3)(ii)	75.350(b)(3)(ii) (revised)
75.362(a)(2)	75.362(a)(2) (revised)
75.362(g)(2)	75.362(g)(2) (revised)
75.371(f)	75.371(f) (revised)
75.371(j)	75.371(j) (revised)
75.371(t)	75.371(t) (revised)
90.1	90.1 (revised)
90.2	90.2 (revised)
90.3	90.3
90.3(a)	90.3(a) (revised)
90.3(b)	90.3(b)
90.3(c)	90.3(c)
90.3(d)	90.3(d) (revised)
90.3(e)	90.3(e) (revised)
90.3(f)	90.3(f)
90.100	90.100 (revised)
90.101	90.101 (revised)
90.102(a)	90.102(a) (revised)
90.102(b)	90.102(b)
90.102(c)	90.102(c)
90.103(a)	90.103(a)
90.103(b)	90.103(b)
90.103(c)	90.103(d)
90.103(d)	90.103(e)
90.103(e)	90.103(f)
90.103(f)	90.103(g)
90.104	90.104
90.104(a)	90.104(a)
90.104(a)(1)	90.104(a)(1)
90.104(a)(2)	90.104(a)(2) (revised)
90.104(a)(3)	90.104(a)(3) (revised)
90.104(b)	90.104(b)
90.104(c)	90.104(c)
90.201	90.201 (revised)
90.201(a)	90.201(a) (revised)
90.201(b)	90.201(b) (revised)
90.201(c)	90.201(g) (revised)
90.201(d)	90.208(e) (revised), 90.209(e) (revised)
90.201(e)	90.201(e)
90.201(f)	90.201(c)
90.201(f)(1)	90.201(c)(1)
90.201(f)(2)	90.201(c)(2)
90.201(f)(3)	90.201(c)(3)
90.202	90.202
90.202(a)	90.202(a)
90.202(b)	90.202(b) (revised)
90.202(c)	Removed
90.203	90.203
90.203(a)	90.203(a)
90.203(b)	90.203(b) (revised)
90.203(c)	Removed
90.204	90.204

DISTRIBUTION TABLE

Existing section	Proposed section
90.204(a)	90.204(a) (revised)
90.204(b)	90.204(b) (revised)
90.204(c)	Removed
90.204(d)	90.204(c) (revised)
90.204(d)(1)	90.204(c)(5) (revised)
90.204(d)(2)	90.204(c)(1) (revised)
90.204(d)(3)	90.204(c)(2) (revised)
90.204(d)(4)	90.204(c)(3) (revised)
90.204(d)(5)	90.204(c)(4) (revised)
90.204(e)	90.204(e)
90.205	90.205
90.205(a)	90.205(a) (revised)
90.205(b)	90.205(b), (b)(1) (revised)
90.205(c)	90.205(b)(2) (revised)
90.205(d)	90.205(b)(1)
90.206	90.2 (revised)
90.207	90.207 (revised)
90.207(a)	90.207(a)
90.207(a)(1)	90.207(a)(1)
90.207(a)(2)	90.207(a)(2) (revised)
90.207(a)(3)	90.207(a)(3)
90.208	90.208 (revised)
90.208(a)	90.208(a) (revised)
90.208(b)	90.208(b)(1) (revised)
90.208(c)	90.208(d) (revised)
90.209	90.210
90.209(a)	90.210(a)
90.209(b)	90.210(b)
90.209(c)	90.210(c) (revised)
90.209(d)	90.210(d)
90.209(e)	90.210(e)
90.210	90.211
90.210(a)	90.211(a) (revised)
90.210(a)(1)	90.211(a)(1)
90.210(a)(2)	90.211(a)(2) (revised)
90.210(a)(3)	90.211(a)(3) (revised)
90.210(a)(4)	90.211(a)(4) (revised)
90.210(a)(5)	90.211(a)(5)
90.210(a)(6)	90.211(a)(6)
90.210(a)(7)	90.211(a)(7) (revised)
90.210(b)	90.211(b)
90.220	90.212, 90.212(a) (revised)
90.300	90.300
90.300(a)	90.300(a) (revised)
90.300(b)	90.300(b)
90.300(b)(1)	90.300(b)(1)
90.300(b)(2)	90.300(b)(2) (revised)
90.300(b)(3)	90.300(b)(3) (revised)
90.300(b)(4)	90.300(b)(4)
90.301	90.301
90.301(a)	90.301(a)
90.301(a)(1)	90.301(a)(1) (revised)
90.301(a)(2)	90.301(a)(2)
90.301(b)	90.301(b) (revised)
90.301(c)	90.301(c)
90.301(d)	90.301(d)
90.301(e)	90.301(e)

VII. Executive Order 12866

Executive Order (E.O.) 12866 requires that regulatory agencies assess both the costs and benefits of regulations. To comply with E.O. 12866, MSHA has prepared a Preliminary Regulatory Economic Analysis (PREA) for this proposed rule. The PREA contains supporting data and explanation for the summary materials presented in this preamble, including the covered mining industry, costs and benefits, feasibility, small business impacts, and paperwork. The PREA can be accessed electronically at *http://www.msha.gov/rea.htm.* A copy of the PREA can be obtained from MSHA's Office of Standards, Regulations and Variances at the address in the **ADDRESSES** section of this preamble. MSHA requests comments on all estimates of costs and benefits presented in this preamble and in the PREA, and on the data and assumptions the Agency used to develop estimates.

Under E.O. 12866, a significant regulatory action is one meeting any of a number of specified conditions, including the following: Having an annual effect on the economy of $100 million or more, creating a serious inconsistency or interfering with an action of another agency, materially altering the budgetary impact of entitlements or the rights of entitlement recipients, or raising novel legal or policy issues. Based on the PREA, MSHA has determined that this proposed rule would not have an annual effect of $100 million or more in terms of compliance costs to the economy and therefore it is not an economically significant regulatory cost action pursuant to section 3(f) of Executive Order 12866. However, benefit effects of the proposed rule are likely to exceed $100 million and would be economically significant in terms of benefits.

A. Population at Risk

The proposed rule would apply to all underground and surface coal mines in the United States. For 12 months ending January 2010, there was an average of 424 active underground coal mines employing approximately 40,300 miners (excluding office workers) and 1,123 active surface coal mines employing approximately 32,300 miners (excluding office workers).

B. Benefits

This section includes a summary of the health risks under the existing standard; estimated health risks under the proposed rule; and the estimated benefits resulting from proposed changes. The primary benefit of the proposed rule is the reduction of occupational lung disease among coal miners by improving the existing program to control respirable coal mine dust and quartz, and reducing miners' exposure to these hazards.

Three documents that examined the program to control respirable coal mine dust in U.S. mines were MSHA's Respirable Dust Task Group Report, the National Institute for Occupational Safety and Health's (NIOSH) Criteria Document on Occupational Exposure to Respirable Coal Mine Dust, and the Report of the Secretary of Labor's Advisory Committee on the Elimination of Pneumoconiosis Among Coal Mine Workers. While recognizing that significant progress had been made to reduce respirable coal mine dust levels in coal mines, these documents concluded that there are existing practices in the dust program that should be changed to provide miners with increased health protection. This proposed rule would address many of the recommendations made in those documents. The primary benefit of the proposed rule is the reduction of occupational lung disease (*e.g.,* coal workers' pneumoconiosis (CWP), progressive massive fibrosis (PMF), silicosis, and chronic obstructive pulmonary disease (COPD)) among coal miners. This reduction results from improving the existing program to control respirable coal mine dust and quartz, and reducing miners' exposure to these hazards. These adverse health effects are considered collectively to be non-malignant (non-cancerous) respiratory diseases (NMRD).

MSHA based its estimate of benefits on the 2010 Quantitative Risk Assessment (QRA) developed specifically to support this proposed rule. The 2010 QRA focuses on the effects of the proposed lowering of the standard to 1.0 mg/m^3 for most miners (0.5 mg/m^3 for part 90 miners) and the proposed use of single shift samples to determine noncompliance.

To estimate the benefits of the proposed rule, the QRA compared the risks for two hypothetical cohorts of miners with the same occupation/coal rank distribution. The cohort designed to characterize risks to current workforce was assigned 45-year lifetime exposures based on current monitoring data. The comparison cohort was assigned 45-year lifetime exposures designed to represent risks associated with two provisions of the proposed rule (*i.e.,* lowering the limit from 2.0 mg/m^3 to 1.0 mg/m^3 and basing determinations of noncompliance on single samples rather than the average of 5 samples). Since the two cohorts being compared are independent, it is important to note two important caveats: (1) No benefits were projected for slowing or stopping the progression of disease among the population that has experienced current (or historical) exposures during their working lifetime; and (2) due to the latency between exposure and disease, especially for such endpoints as severe emphysema, a

large portion of the benefits estimated by this analysis would not be expected to accrue for many years into the future.

Based upon this analysis, MSHA estimates that over a 45-year working lifetime, two provisions of the proposed rule (*i.e.,* lowering the limit from 2.0 mg/m³ to 1.0 mg/m³ and basing determinations of noncompliance on single samples rather than the average of 5 samples) would result in the prevention of the adverse health effects shown in Table VII–1.

TABLE VII–1—ESTIMATED NUMBER OF ADVERSE HEALTH EFFECTS PREVENTED OVER 45 YEARS FROM TWO PROVISIONS OF THE PROPOSED RULE

[Lowering the limit from 2.0 mg/m³ to 1.0 mg/m³ and basing determinations of noncompliance on single samples]

	CWP 1+	CWP 2+	PMF	Severe emphysema	Deaths from NMRD
Number of Cases Prevented Over a 45-Year Work Life	1,301	985	641	556	106

MSHA projects that there would be additional reductions in cases of CWP, PMF, severe emphysema, and NMRD resulting from other proposed changes. If the proposed requirement for full-shift sampling and the proposed definition of normal production shift had been in effect in 2009, the amount of dust on the samples would have been higher because of the longer time and the higher levels of production. Lowering exposures from these higher levels to the levels being proposed would result in additional benefits beyond those associated with the actual recorded sampling results. MSHA used additional data from the feasibility assessment to extrapolate the further impact of these two provisions.

TABLE VII–2—ESTIMATED NUMBER OF ADVERSE HEALTH EFFECTS PREVENTED FROM FOUR PROVISIONS OF THE PROPOSED RULE

[Lowering the limit from 2.0 mg/m³ to 1.0 mg/m³, two changes to the sampling strategy and the revised definition of normal production shift]

	CWP 1+	CWP 2+	PMF	Severe emphysema	Deaths from NMRD
Number of Cases Prevented Over a 45-Year Work Life	1,606	1,216	791	687	131

MSHA did not quantify the benefits associated with several provisions of the proposed rule (*e.g.,* sampling the designated occupations (DOs) and Part 90 miners on every production shift using the CPDM, periodic examinations, expanding the Part 90 option to surface miners). MSHA also projects that there would be reductions in cases of other adverse health effects that result from exposure to respirable coal mine dust, such as silicosis and chronic bronchitis, which the Agency has not quantified.

More detailed information about how MSHA estimated benefits is available in the Preliminary Regulatory Economic Analysis (PREA) supporting this proposed rule. Both the PREA and the 2010 QRA are available on MSHA's Web site, at *http://www.msha.gov/rea.htm and http://www.msha.gov/regs/QRA/CoalDust2010.pdf,* respectively.

To estimate the monetary values of the reductions in cases of CWP 1+, CWP 2+, PMF, severe emphysema and deaths from NMRD, MSHA performed an analysis of the imputed value of illnesses and fatalities avoided based on a willingness-to-pay approach. This approach relies on the theory of compensating wage differentials (*i.e.,* the wage premium paid to workers to accept the risk associated with various jobs) in the labor market. A number of studies have shown a correlation between higher job risk and higher wages, suggesting that employees demand monetary compensation in return for incurring a greater risk of illness or fatality.

Viscusi & Aldy (2003) conducted an analysis of studies that use a willingness-to-pay methodology to estimate the imputed value of life-saving programs (*i.e.,* meta-analysis) and found that each fatality avoided was valued at approximately $7 million and each lost work-day injury was approximately $50,000 in 2000 dollars. Using the GDP Deflator (U.S. Bureau of Economic Analysis, 2010), this yields an estimate of $8.7 million for each fatality avoided and $62,000 for each injury avoided in 2009 dollars. MSHA is using the $8.7 million estimate for the value of a death prevented and $62,000 for each case of CWP 1+ or CWP 2+ prevented. This value of a statistical life (VSL) estimate is within the range of the substantial majority of such estimates in the literature ($1 million to $10 million per statistical life), as discussed in OMB Circular A–4 (OMB, 2003).

Given the disabling consequences of PMF and severe emphysema, MSHA does not believe that limiting the value to the estimate for lost workday injuries is appropriate. Instead, MSHA based the value of a case of PMF and severe emphysema prevented on the work of Magat, Viscusi & Huber (1996), which estimated the value of a non-fatal cancer avoided. The Occupational Safety and Health Administration (OSHA) used this approach in the Final Economic Analysis (FEA) supporting its hexavalent chromium final rule, and Environmental Protection Agency (EPA) used this approach in its Stage 2 Disinfectants and Disinfection Byproducts water rule (EPA, 2003). Although PMF and severe emphysema are not non-fatal cancers, MSHA believes that they have a similar impact on the quality of life and would thus result in similar valuations. Based on Magat, Viscusi & Huber (1996), EPA valued the prevention of a case of non-fatal cancer at 58.3 percent of the value of a fatal cancer avoided. MSHA estimates the value of a case of PMF or severe emphysema prevented to be $5.1 million ($5.1 million = 58.3 percent of $8.7 million).

Although MSHA is using the willingness-to-pay approach as the basis for monetizing the expected benefits of the proposed rule, the Agency does so with several reservations, given the methodological difficulties involved in estimating the compensating wage differentials (see Hintermann, Alberini and Markandya, 2008). Furthermore, these estimates pooled across different industries may not capture the unique

circumstances faced by coal miners. For example, some have suggested that VSL models be disaggregated to account for different levels of risk, as might occur in coal mining (see Sunstein, 2004). In addition, coal miners may have few options of alternative employers and in some cases only one employer (near-monopsony or monopsony) that may depress wages below those in a more competitive labor market.

MSHA developed the estimates in Table VII–3 by multiplying the number of adverse health effects in Tables VII–1 and VII–2 by the monetized value of each adverse health effect.

TABLE VII–3—ESTIMATED VALUE OF ADVERSE HEALTH EFFECTS PREVENTED OVER A 45-YEARS [1] WORK LIFETIME

[Millions of 2009 dollars]

	CWP 1+	CWP 2+	PMF	Severe emphysema	Deaths from NMRD	Total
Benefits Based Upon Table VII–1 (i.e., Based on 2010 QRA)						
Underground and Part 90 Miners	66	51	2,815	2,198	653	5,783
Surface Miners	14	10	454	638	270	1,386
Total	80	61	3,269	2,836	923	7,169
Benefits Based Upon Table VII–2 (i.e. Includes Additional Provisions Extrapolated From 2010 QRA Results)						
Underground and Part 90 Miners	82	63	3,467	2,707	804	7,123
Surface Miners	18	12	567	797	337	1,731
Total	100	75	4,034	3,504	1,141	8,854

[1]Estimate is for *a cohort of workers who begin working in mines after the proposed changes are in place.*

The monetized benefits in Table VII–3 cover a 45-year period. When estimating the annual benefits, it is necessary to take the timing into account of when the health benefits accrue. However, it is quite difficult to gauge the timing of reductions in chronic diseases that may not develop until years after initial exposure and whose progression may not be instantly stopped even if exposure were completely eliminated. MSHA did not have the data necessary to project the timing of CWP and related diseases. Furthermore, MSHA does not have data on the historical exposures of the current workforce of coal miners; they have already been exposed to various levels of respirable coal mine dust and some lung damage has invariably already been done. In the absence of this data and the information on the latency and cessation lags, MSHA estimated the monetized benefits under two alternative assumptions to illustrate some of the uncertainty in its estimates.

- First, MSHA made the assumption that benefits begin immediately and that annual benefits equal lifetime benefits divided by 45 years. This assumption is equivalent to assuming that the benefits begin to accrue in the first year after the provisions are put into effect, which MSHA admits is highly unrealistic.
- Second, MSHA assumed that no benefits would occur for the first 10 years and that the annualized benefit for each of the next 35 years would be equal to the projected benefits divided by 35 years.

The impact of each of these assumptions is calculated using a 7 percent discount rate, consistent with OMB's Circular A–4.

TABLE VII–4—ANNUALIZED BENEFITS

[Millions of 2009 dollars]

Distribution assumptions	7% Discount rate, 45 years	
	2 provisions	4 provisions
Immediate, evenly distributed		
Underground/ Part 90	$128.5	$158.3
Surface	30.8	38.5
Total	159.3	196.8
10-year latency, evenly distributed		
Underground/ Part 90	79.9	98.5
Surface	19.2	24.0
Total	99.1	122.4

The analysis numbers presented in Table VII–4 might be viewed as incomplete estimates because they do not include the potential impacts of other provisions of the proposed rule. In addition, MSHA's estimates are based on a series of simplifying assumptions. The impact of these assumptions on the total benefits depends on the degree of the mismatch between the assumption and reality. Unfortunately, MSHA does not have the data to quantify this uncertainty. However, the impact of assumptions about the timing of the benefits probably has the most significant impact on the estimated monetized benefits.

C. Compliance Costs

This section presents MSHA's estimates of costs that would be incurred by underground and surface coal operators to comply with the proposed coal mine dust rule. These costs are based on the assessment of MSHA staff of the most likely actions that would be necessary to comply with the proposed rule. MSHA acknowledges that in rare instances, after taking these projected actions, some mine operators may need to take additional measures to comply. In order to illustrate the full range of possible compliance costs, this section also includes a discussion of three potential situations where some operators could incur additional costs. All three of the following situations are in underground coal mines: (1) Longwall mines that have two entries; (2) mines that have multiple MMUs on a single split of air; and (3) mines operating under reduced respirable coal dust standards below 1.0 mg/m^3 due to the presence of quartz.

MSHA presents two values for the engineering and work practice estimates and the total cost estimates for underground coal mines. The lower value represents MSHA's most likely estimate. The higher value includes additional costs for those rare instances where some operators after taking these actions may encounter implementation issues as they attempt to comply with the proposed requirements and need to take additional measures to comply with the proposed standard.

MSHA estimates that the first year cost of the proposed rule would be approximately $72.4 to $93.2 million

and the annualized cost of the proposed rule would be approximately $40.4 to $44.5 million.

The estimated first year costs of the proposed rule for underground coal mine operators would be approximately $63.6 to $84.4 million. Costs associated with the proposed requirement to use CPDMs ($51.5 million) and upgrading and maintaining existing engineering controls and work practices ($12.6 to $33.4 million) represent the most significant first year costs for underground coal operators.

The first year costs of the proposed rule for surface coal mine operators would be approximately $8.8 million. The proposed expansion of the part 90 transfer option to surface miners represents the most significant first year cost for surface operators.

MSHA estimates that at a 7% discount rate, the annualized costs of the proposed rule for underground coal mine operators would be approximately $35.6 to 39.7 million. Costs associated with the proposed requirement to use CPDMs ($24.8 million) and upgrading and maintaining existing engineering controls and work practices ($5.1 to 9.1 million) represent the most significant annualized costs for underground coal operators.

MSHA estimates that at a 7% discount rate, the annualized costs of the proposed rule for surface coal operators would be approximately $4.8 million. Costs associated with the proposed expansion of the part 90 transfer option to surface miners ($1.9 million) represent 40 percent of the total annualized costs for surface operators.

D. Net Benefits

This section presents a summary of estimated benefits and costs of the proposed rule for informational purposes only. Under the Mine Act, MSHA is not required to use estimated net benefits as the basis for its decision. MSHA's estimates suggest, however, that net benefits are positive, with (1) economically significant estimated annualized benefits ranging from $99 to $197 million and (2) estimated annualized costs ranging from $40 to $44 million. The estimates of costs and benefits are only roughly comparable due to both limitations in the data and different underlying assumptions.

The annualized dollar value of the benefits MSHA estimated range from (1) a low of $99 million per year for only two provisions of the proposed rule and an assumption of a 10 year latency period at a discount rate of 7% to (2) a high of $197 million per year for four of the provisions of the proposed rule and an assumption of no latency. These estimates are both incomplete and highly uncertain because they do not include the potential impacts of other provisions of the proposed rule and because MSHA does not have the data necessary to either (a) calculate benefits to those with historical exposures and pre-existing conditions or (b) estimate how long into the future it will be until the benefits of this proposal might begin to accrue. With respect to the latter, the comparison of benefits streams from assuming no latency to assuming a ten year latency highlights the degree of uncertainty. While an estimate of no latency is unrealistic, so are the implicit assumptions that there would be no benefits from the provisions that were not included in the analysis and no benefits would accrue to those with significant historical exposures. Thus, these estimates encompass a significant amount of uncertainty. MSHA requests comments on methods to both improve the comprehensiveness of the benefits estimates and better characterize timing of the stream of benefits.

TABLE VII–5—ANNUALIZED BENEFITS 7% DISCOUNT RATE

[Millions of 2009 dollars]

Distribution assumptions	2 provisions	4 provisions
Immediate, evenly distributed		
Underground/ Part 90	$128.5	$158.3
Surface	30.8	38.5
Total	159.3	196.8
10-year latency, evenly distributed		
Underground/ Part 90	79.9	98.5
Surface	19.2	24.0
Total	99.1	122.4

The annualized costs MSHA estimated range from $40.4 to $44.5 million. The lower value represents MSHA's most likely estimate. The higher value includes additional costs for those rare instances where some operators of underground mines may encounter implementation issues as they attempt to comply with the proposed requirements and may need to take additional measures to comply with the proposed standard. MSHA requests comments on the cost estimates and solicits information on data sources to better characterize the cost range.

TABLE VII–6—ANNUALIZED COSTS OF PROPOSED RULE 7% DISCOUNT RATE

[Millions of 2009 dollars]

	1–19	20–500	501 +	Totals
Most Likely Estimated Costs				
Underground Operators	$1.6	$29.6	$35.6	
Surface Operators	1.1	3.3	0.4	4.8
Total	2.7	32.9	4.8	40.4
Most Likely Estimated Costs plus Additional Costs for Rare Situations				
Underground Operators	1.6	32.5	5.6	39.7
Surface Operators	1.1	3.3	0.4	4.8
Total	2.7	35.8	6.0	44.5

The range of benefits and costs estimated by MSHA do not correspond to the same assumptions: The benefit range corresponds to assumptions about latency periods while the cost range corresponds to assumptions about whether some mines may incur additional costs. Thus, the probability that the benefits will be at the high end of the benefit distribution is entirely independent of the probability that the costs will be at the high end of the cost distribution. A comparison of benefits and costs, therefore, encompasses a broad range of independent assumptions.

VIII. Feasibility

Although MSHA has concluded that the requirements of the proposed rule would be both technologically and

economically feasible, MSHA has included a phase-in period for two of the major provisions to facilitate implementation of the proposal. The Agency's actions are discussed in more detail below.

A. Technological Feasibility

Based on both Agency and mine operator data, MSHA believes that this proposed rule is technologically feasible. Data show that not only are mine operators keeping miners' exposures at or below the levels required under the existing standards, but dust exposures at most operations average less than 1.0 mg/m3. Based on these data, the majority of miners' exposures are at or below the limits in the proposed rule. MSHA understands that these data reflect measurements under the existing sampling program and that requirements under the proposed rule (*e.g.,* use of single full-shift samples to determine noncompliance, change in the definition of normal production shift) would result in higher measured exposures compared to the existing sampling program. However, existing engineering controls including ventilation, sprays, and environmentally controlled cabs along with changes in work practices can be used to further reduce dust levels.

To facilitate operator implementation of the requirements in the proposed rule related to the lower exposure limits, MSHA has included a 24-month phase-in period to allow mine operators time to come into compliance. During this phase-in period, MSHA will work with the mining industry to help them identify, develop, and implement feasible engineering controls, and train miners and supervisors in new technology.

The proposal would require implementation of new and improved dust monitoring technology, the CPDM. The proposal would require the operator to use the CPDM to sample certain underground occupations and part 90 miners. To facilitate implementation of use of CPDMs, MSHA has proposed a 12- and 18-month phase-in period, unless otherwise notified by the Secretary. MSHA believes that the proposed phase-in periods would allow manufacturers enough time to produce the necessary quantity of CPDMs and MSHA and operators enough time to train necessary personnel in the use and care of the device. The Agency recognizes that availability of the device may present logistical and other issues at the time the final rule becomes effective. The Agency intends to address the issue of availability in two ways. First, the proposal would require the use of the CPDM to sample (1) the Designated Occupation in each MMU and Part 90 miners, and (2) each Other Designated Occupation, within a 12-month and 18-month period, respectively, unless notified by the Secretary. If, during the phase-in periods, MSHA determines that there will be logistical and feasibility issues surrounding the availability of CPDMs by the time the final rule becomes effective, the Agency will, through publication in the **Federal Register**, notify the public of the Agency's plans. Second, assuming no logistical or feasibility issues concerning the availability of CPDMs, and depending on manufacturer projections, if CPDMs are not available in sufficient quantities, MSHA will accept, as good faith evidence of compliance with the final rule, a valid, bona fide, written purchase order with a firm delivery date for the CPDMs.

The Agency has specifically included in the preamble discussion a request for comment on the proposed phase-in periods of the two proposed provisions: (1) Lowering the respirable dust limits; and (2) requiring use of CPDMs. Specifically, on phase-in periods related to CPDMs, the Agency requests that comments address the time period and the Agency's intent with respect to availability of CPDMs. The Agency asks that commenters be specific in their comments, and include rationale for suggested alternatives.

B. Economic Feasibility

MSHA has traditionally used a revenue screening test—whether the annualized compliance costs of a regulation are less than 1 percent of revenues, or are negative (*i.e.,* provide net cost savings)—to establish presumptively that compliance with the regulation is economically feasible for the mining industry. Based upon this test, MSHA has concluded that the requirements of the proposed rule are economically feasible. The annualized compliance costs of the proposed rule to underground coal mine operators are $35.6 to 39.7 million, which are approximately 0.2 percent of total annual revenue of $17 billion ($39.7 million/$17 billion) for all underground coal mines. The annualized compliance cost of the proposed rule to surface coal mine operators is $4.8 million, which is approximately 0.03 percent of total annual revenue of $16.6 billion ($5.3 million/$16.6 billion) for all surface coal mines. Since the estimated compliance costs for both underground and surface coal mines are below one percent of their estimated annual revenue, MSHA concludes that compliance with the provisions of the proposed rule would be economically feasible for the coal industry.

IX. Regulatory Flexibility Act and Small Business Regulatory Enforcement Fairness Act

Pursuant to the Regulatory Flexibility Act (RFA) of 1980, as amended by the Small Business Regulatory Enforcement Fairness Act (SBREFA), MSHA has analyzed the compliance cost impact of the proposed rule on small entities. Based on that analysis, MSHA has determined and certifies that the proposed rule would not have a significant economic impact on a substantial number of small entities in terms of compliance costs. Therefore, the Agency is not required to develop an initial regulatory flexibility analysis.

The factual basis for this certification is presented in full in Chapter V of the PREA and in summary form below.

A. Definition of a Small Mine

Under the RFA, in analyzing the impact of a rule on small entities, MSHA must use the Small Business Administration's (SBA's) definition for a small entity, or after consultation with the SBA Office of Advocacy, establish an alternative definition for the mining industry by publishing that definition in the **Federal Register** for notice and comment. MSHA has not established an alternative definition, and is required to use SBA's definition. The SBA defines a small entity in the mining industry as an establishment with 500 or fewer employees.

MSHA has also examined the impact of the proposed rule on mines with fewer than 20 employees, which MSHA and the mining community have traditionally referred to as "small mines." These small mines differ from larger mines not only in the number of employees, but also in economies of scale in material produced, in the type and amount of production equipment, and in supply inventory. Therefore, their costs of complying with MSHA's rules and the impact of the agency's rules on them will also tend to be different. This analysis complies with the requirements of the RFA for an analysis of the impact on "small entities" while continuing MSHA's traditional definition of "small mines."

B. Factual Basis for Certification

MSHA's analysis of the economic impact on "small entities" begins with a "screening" analysis. The screening compares their estimated costs of the proposed rule for small entities to the estimated revenues. When estimated costs are less than one percent of

estimated revenues (for the size categories considered), MSHA believes it is generally appropriate to conclude that there is no significant economic impact on a substantial number of small entities. If estimated costs are equal to or exceed one percent of revenues, further analysis may be warranted.

Revenue for underground and surface coal mines is derived from data on coal prices and tonnage. The 2008 price of coal was $51.35 per short ton for underground coal and $22.35 per short ton for surface coal.[2]

Total underground coal production in 2009 was approximately 5 million short tons for mines with 1–19 employees. Multiplying tons by the 2008 price per ton, 2009 underground coal revenue was $259 million for mines with 1–19 employees. Total underground coal production in 2009 was approximately 242 million short tons for mines with 1–500 employees. Multiplying tons by the 2008 price per ton, 2009 underground coal revenue was $12.4 billion for mines with 1–500 employees. Total underground coal production in 2009 was approximately 332 million tons. Multiplying tons by the 2008 price per short ton, total estimated revenue in 2009 for underground coal production was $17.0 billion.

The estimated annualized cost of the proposed rule for underground coal mines with 1–19 employees is approximately $1.6 million, or approximately $20,000 per mine. This is equal to approximately 0.63 percent of annual revenues. MSHA estimates that some mines might experience costs somewhat higher than the average per mine in their size category while others might experience lower costs.

When applying SBA's definition of a small mine, the estimated annualized cost of the proposed rule for underground coal mines with 1–500 employees is approximately $34.1 million, or approximately $82,800 per mine. This is equal to approximately 0.28 percent of annual revenue.

Based on this analysis, MSHA has determined that the proposed rule will not have a significant economic impact in terms of compliance costs on a substantial number of small underground coal mines.

Total surface coal production in 2009 was approximately 19.7 million short tons for mines with 1–19 employees. Multiplying tons by the 2008 price per ton, 2009 surface coal revenue was $441 million for mines with 1–19 employees. Total surface coal production in 2009 was approximately 495 million short tons for mines with 1–500 employees. Multiplying tons by the 2008 price per ton, 2009 surface coal revenue was $11.1 billion for mines with 1–500 employees. Total surface coal production in 2009 was approximately 743 million short tons. Multiplying tons by the 2008 price per ton, total estimated revenue in 2009 for surface coal production was $16.6 billion.

The estimated annualized cost of the proposed rule for surface coal mines with 1–19 employees is approximately $1.1 million, or approximately $1,800 per mine. This is equal to approximately 0.25 percent of annual revenues. MSHA estimates that some mines might experience costs somewhat higher than the average per mine in their size category while others might experience lower costs.

When applying SBA's definition of a small mine, the estimated annualized cost of the proposed rule for surface coal mines with 1–500 employees is approximately $4.4 million, or approximately $4,000 per mine. This is equal to approximately 0.04 percent of annual revenue.

Based on this analysis, MSHA has determined that the proposed rule will not have a significant economic impact in terms of compliance costs on a substantial number of small surface coal mines. Since the annualized costs of the proposed rule are less than one percent of annual revenue for both small underground and surface coal mines, as defined by SBA, MSHA has certified that the proposed rule would not have a significant impact on a substantial number of small mining entities, as defined by SBA. However, MSHA has provided, in the PREA accompanying this rule, a complete analysis of the cost impact on this category of mines.

X. Paperwork Reduction Act of 1995

A. Summary

This proposed rule contains changes that would affect the burden in existing paperwork packages with OMB Control Numbers 1219–0011, 1219–0048, and 1219–0088. The proposed rule also contains new burden for collection requirements that are listed in Table X–1. This proposed rule would result in 120,864 burden hours and related costs of approximately $10.2 million in the first year the rule is in effect. In the second year the rule is in effect, the proposed rule would result in 156,103 burden hours and related costs of approximately $13.4 million. In the third year the rule is in effect, the proposed rule would result in 162,267 burden hours and related costs of approximately $14 million.

TABLE X–1—NEW BURDEN FOR INFORMATION COLLECTION REQUIREMENTS IN THE PROPOSED RULE

30 CFR Part	Proposed sections
Part 70	70.201(g), (i), (k).
	70.206(a), (a)(1), (a)(3), (c), (c)(1), (c)(3), (d).
	70.207(c)(2), (g)(2), (h), (i)(3).
	70.208(f)(3), (f)(4), (f)(5), (g)(3), (g)(4), (h).
	70.209(b)(2), (e)(2), (f), (g)(3), (g)(4).
	70.210(c), (f).
	70.211(b), (c).
	70.212(c).
Part 71	71.201(d), (h).
	71.206(a), (a)(1), (a)(3), (c)(1), (c)(3), (d).
	71.207(c), (k)(2), (k)(4), (l), (n)(2).
	71.208(c), (f).
	71.209(b), (c).
	71.210(c).
	71.300(a), (a)(1), (a)(3).
	71.301(d)(1), (d)(3).
Part 72	72.100(d), (e).
	72.700(c).
Part 75	75.362(a)(2), (g)(2)(ii), (g)(3), (g)(4).
Part 90	90.201(f), (i).
	90.206(a), (b), (d), (e).
	90.208(e)(2), (f), (g)(3).
	90.209(e)(3), (e)(4), (e)(5), (f)(3), (f)(4).
	90.210(c), (f).
	90.211(b), (c).
	90.212(b).
	90.300(a).
	90.301(d).

For a detailed summary of the burden hours and related costs by provision, see the Preliminary Regulatory Economic Analysis (PREA) accompanying this proposed rule. The PREA is posted on MSHA's Web site at *http://www.msha.gov/rea.HTM.* A paper copy of the PREA can be obtained from MSHA's Office of Standards, Regulations, and Variances at the address provided in the **ADDRESSES** section of this preamble.

B. Procedural Details

The information collection package for this proposed rule has been submitted to OMB for review under 44 U.S.C. § 3504, paragraph (h) of the Paperwork Reduction Act of 1995, as amended. A copy of the information collection package can be obtained from the Department of Labor by electronic mail request to Michel Smyth or by phone request to (202) 693–4129.

MSHA requests comments to:

- Evaluate whether the proposed collection of information is necessary for the proper performance of the functions of the agency, including

[2] U.S. DOE, EIA, "Annual Coal Report 2009," Table 28, October 2009.

whether the information will have practical utility;

- Evaluate the accuracy of the Agency's estimate of the burden of the proposed collection of information, including the validity of the methodology and assumptions used;
- Enhance the quality, utility, and clarity of the information to be collected; and
- Minimize the burden of the collection of information on those who are to respond, including through the use of appropriate automated, electronic, mechanical, or other technological collection techniques or other forms of information technology, *e.g.,* permitting electronic submission of responses.

Comments on the information collection requirements should be sent to both OMB and MSHA. Addresses for both offices can be found in the **ADDRESSES** section of this preamble. The regulated community is not required to respond to any collection of information unless it displays a current, valid, OMB control number. MSHA displays the OMB control numbers for the information collection requirements in its regulations in 30 CFR part 3.

XI. Other Regulatory Considerations

A. National Environmental Policy Act (NEPA)

The National Environmental Policy Act (NEPA) of 1969 (42 U.S.C. 4321 *et seq.*), requires each Federal agency to consider the environmental effects of final actions and to prepare an Environmental Impact Statement on major actions significantly affecting the quality of the environment. MSHA has reviewed the proposed standard in accordance with NEPA requirements, the regulation of the Council on Environmental Quality (40 CFR part 1500), and the Department of Labor's NEPA procedures (29 CFR part 11). As a result of this review, MSHA has preliminarily determined that this proposed rule will have no significant environmental impact.

B. The Unfunded Mandates Reform Act of 1995

MSHA has reviewed the proposed rule under the Unfunded Mandates Reform Act of 1995 (2 U.S.C. 1501 *et seq.*). MSHA has determined that this proposed rule does not include any federal mandate that may result in increased expenditures by State, local, or tribal governments; nor will it increase private sector expenditures by more than $100 million in any one year or significantly or uniquely affect small governments. Accordingly, the Unfunded Mandates Reform Act of 1995 (2 U.S.C. 1501 *et seq.*) requires no further Agency action or analysis.

C. The Treasury and General Government Appropriations Act of 1999: Assessment of Federal Regulations and Policies on Families

Section 654 of the Treasury and General Government Appropriations Act of 1999 (5 U.S.C. 601) requires agencies to assess the impact of Agency action on family well-being. MSHA has determined that the proposed rule will have no effect on family stability or safety, marital commitment, parental rights and authority, or income or poverty of families and children. The proposed rule impacts the coal mine industry. Accordingly, MSHA certifies that the proposed rule will not impact family well-being.

D. Executive Order 12630: Government Actions and Interference With Constitutionally Protected Property Rights

This proposed rule does not implement a policy with takings implications. Accordingly, under E.O. 12630, no further Agency action or analysis is required.

E. Executive Order 12988: Civil Justice Reform

The proposed rule was written to provide a clear legal standard for affected conduct and was carefully reviewed to eliminate drafting errors and ambiguities, so as to minimize litigation and undue burden on the Federal court system. Accordingly, the proposed rule will meet the applicable standards provided in § 3 of E.O. 12988, Civil Justice Reform.

F. Executive Order 13045: Protection of Children From Environmental Health Risks and Safety Risks

The proposed rule will have no adverse impact on children. Accordingly, under E.O. 13045, no further Agency action or analysis is required.

G. Executive Order 13132: Federalism

The proposed rule does not have "federalism implications" because it will not "have substantial direct effects on the States, on the relationship between the national government and the States, or on the distribution of power and responsibilities among the various levels of government." Accordingly, under E.O. 13132, no further Agency action or analysis is required.

H. Executive Order 13175: Consultation and Coordination With Indian Tribal Governments

The proposed rule does not have "tribal implications" because it will not "have substantial direct effects on one or more Indian tribes, on the relationship between the Federal government and Indian tribes, or on the distribution of power and responsibilities between the Federal government and Indian tribes." Accordingly, under E.O. 13175, no further Agency action or analysis is required.

I. Executive Order 13211: Actions Concerning Regulations That Significantly Affect Energy Supply, Distribution, or Use

Executive Order 13211 requires agencies to publish a statement of energy effects when a rule has a significant energy action that adversely affects energy supply, distribution or use. The proposed rule has been reviewed for its impact on the supply, distribution, and use of energy because it applies to the coal mining industry. Insofar as the proposed rule would result in annualized compliance costs of $35.6 to 39.7 million for the underground coal industry relative to annual revenues of $17 billion in 2009 and annualized compliance costs of $4.8 million for surface coal industry relative to annual revenue of $16.6 billion in 2009, it is not a "significant energy action" because it is not "likely to have a significant adverse effect on the supply, distribution, or use of energy * * * (including a shortfall in supply, price increases, and increased use of foreign supplies)." Accordingly, Executive Order 13211 requires no further Agency action or analysis.

J. Executive Order 13272: Proper Consideration of Small Entities in Agency Rulemaking

MSHA has thoroughly reviewed the proposed rule to assess and take appropriate account of its potential impact on small businesses, small governmental jurisdictions, and small organizations. MSHA has determined and certified that the proposed rule will not have a significant economic impact on a substantial number of small entities.

XII. References

Aitchison, J and Brown, JAC (1957). *The Lognormal Distribution,* Cambridge University Press.

Althouse RB, Castellan RM, Attfield MD, Bang KM, Parker JE (1998). Surveillance of Pneumoconiosis Morbidity in U.S. Underground Coal Miners: 1970–1995. In: Chiyotani K, Hosoda Y, Aizawa Y

(eds.). *Advances in the Prevention of Occupational Respiratory Diseases: Proceedings of the 9th International Conference on Occupational Respiratory Diseases,* p. 174–179.

Altin R, Armutcu F, Kart L, Gurel A, Savranlar A, Ozdemir H (2004). Antioxidant response at early stages and low grades of simple coal worker's pneumoconiosis diagnosed by high resolution computed tomography. *International Journal of Hygiene and Environmental Health* 207(5):455–62.

American Conference of Governmental Industrial Hygienists (ACGIH) (1999). *TLVs7 and BEIs7. Threshold Limit Values for Chemical Substances and Physical Agents, Biological Exposure Indices.* Cincinnati, OH.

American Industrial Hygiene Association (AIHA) (1997). The Occupational Environment—Its Evaluation and Control. Salvatore R. DiNardi, Editor. AIHA Press, Fairfax, VA.

Antao VC, Petsonk EL, Sokolow LZ, Wolfe AL, Pinheiro GA, Attfield MD (2005). *Rapidly progressive coal workers' pneumoconiosis in the United States: geographic clustering and other factors.* Occup Environ Med. 62(10):670–674.

Antao VC, Petsonk EL, Attfield MD (2006). Advanced Cases of Coal Workers' Pneumoconiosis, Lee and Wise Counties, Virginia. *MMWR* 55(33):910–912.

Ashford JR, Fay JW, Smith CS (1965). The correlation of dust exposure with progression of radiological pneumoconiosis in British coal miners. *Am Ind Hyg Assoc J.*, Jul–Aug;26(4):347–61.

Attfield, MD and Seixas, NS, 1995, "Prevalence of pneumoconiosis and its relationship to dust exposure in a cohort of U.S. bituminous coal miners and ex-miners"; *American Journal of Industrial Medicine* 27:137–151.

Attfield MD, Petsonk EL (2007). Advanced Pneumoconiosis Among Working Underground Coal Miners—Eastern Kentucky and Southwestern Virginia, 2006. *MMWR* 56(26):652–655.

Attfield MD, Kuempel ED (2003). Commentary—Pneumoconiosis, coalmine dust, and the PFR. *Ann Occup Hyg* 47(7):525–529.

Attfield MD, Kuempel E (2008). Mortality Among U.S. Underground Coal Miners; a 23-year follow-up. *Am J Ind Med* 51(4):231–245.

Attfield MD, Castranova V., Wagner G (2007). Respiratory Disease in Coal Miners. *Environmental and Occupational Medicine* 4(22):1–49.

Attfield MD, Bang KM, Petsonk EL, Schleiff PL, Mazurek JM (2009). Trends in pneumoconiosis mortality and morbidity for the United States, 1968–2005, and relationship. *Proceedings of Inhaled Particles X, (23–25 September 2008) Conference, Manchester, UK.* Journal of Physics: Conference Series 151 (2009) 012051 doi:10.1088/1742–6596/151/1/0112051.

Beeckman LA, Wang ML, Petsonk EL, Wagner GR (2001). Rapid declines in FEV1 and subsequent respiratory symptoms, illnesses, and mortality in coal miners in the United States. *Am J Respir Crit Care Med* 163 (3 Pt 1): 633–9.

Boschetto P., Quintavalle S., Miotto D, Cascio N, Zeni E, and Mapp C (2006). Chronic obstructive pulmonary disease (COPD) and occupational exposures. *J Occup Med Tox* 1:11. doi:10.1186/1745–6673–1–11.

Bourgkard E, Bernadac P, Chau N, Bertrand J–P, Tesculescu D, Thieu Pham, Q (1998). Can the Evolution to Pneumoconiosis Be Suspected in Coal Miners? A Longitudinal Study. *Am J Respir Crit Care Med* 158:504–509.

Box, GEP and Cox, DR, (1964). "An Analysis of Transformations;" *Journal of the Royal Statistical Society,* Series B 26:211–252.

Coggon D, Newman-Taylor, A (1998). Coal Mining and chronic obstructive pulmonary disease: a review of the evidence. *Thorax* 53,398–407.

Cohen RA, Patel A, Green FH. (2008). Lung disease caused by exposure to coal mine and silica dust. *Semin Respir Crit Care Med* 9(6):651–61. Epub 2009 Feb 16.

Cowie H, Miller BG, Soutar CA (1999). Dust-related risks of clinically relevant lung functional deficits. Research Report. TM/99/06. Edinburgh: Institute of Occupational Medicine.

De Andrade Jr. D, De Souza R, Dos Santos S, De Andrade D (2005). Oxygen free radicals and pulmonary disease. *J Bras Pneumol* 31(1):60–8.

Energy Information Administration (2007) Annual Coal Report—Table 1, pages 11 and 12; and Table 18, page 37.

Federal Coal Mine Health and Safety Act (1969), House Report No. 91–563, October 13, 1969, pp. 12–13.

Green FHY, Brower PL, Vallyathan V, Attfield M [1998a]. Coal Mine Dust Exposure and Type of Pulmonary Emphysema in Coal Workers. In: Chiyotani K, Hosoda Y, Aizawa Y (eds.). Advances in the Prevention of Occupational Respiratory Diseases: Proceedings of the 9th International Conference on Occupational Respiratory Diseases. pp. 948–953.

Green FHY, Althouse R, Parker J, Kahn J, Weber K, Vallyathan V [1998b]. Trends in the Prevalence of Coal Workers' Pneumoconiosis in U.S. Autopsied Coal Miners. In: Chiyotani K, Hosoda Y, Aizawa Y (eds.). Advances in the Prevention of Occupational Respiratory Diseases: Proceedings of the 9th International Conference on Occupational Respiratory Diseases, Kyoto, Japan, 13–16, October 1997, Pp. 145–148.

Hansen EF, Phanareth K, Laursen LC, Kok-Jensen A, Dirksen, A (1999) Reversible and irreversible airflow obstruction as predictor of overall mortality in asthma and chronic obstructive pulmonary disease. *Am. J. Respir. Crit. Care Med* 159:1267–1271.

Henneberger PK, Attfield, MD (1997) Respiratory symptoms and spirometry in experienced coal miners: Effects of both distant and recent coal mine dust exposures. *Am. J. Ind. Med* 32:268–274.

Heppleston AG. (1988). *Prevalence and pathogenesis of pneumoconiosis in coal workers. Environ Health Perspect.* Jun; 78:159–70. Institute of Occupational Medicine, Edinburgh, UK.

Hintermann, Beat, Alberini, Anna and Markandya, Anil, (2008) "Estimating the Value of Safety with Labor Market Data: Are the Results Trustworthy?" Applied Economics (2010): 1085–1100. Published electronically in July 2008.

Huang X, Li W, Attfield MD, Nadas A, Frenkel K, Finkelman RB (2005). Mapping and prediction of coal workers' pneumoconiosis with bioavailable iron content in the bituminous coals. *Environ Health Perspect.*113:964–968.

Hurley F, Kenny L, Miller B (2002). Health impact estimates of dust-related disease in UK coal miners: Methodological and practical issues. *Ann. Occup. Hyg* 46 (Suppl 1): 261–264.

International Labour Office. (1980) International Classification of Radiographs of Pneumoconiosis. Occupational Safety and Health, Series No. 22 (Rev 80). Geneva, Switzerland: International Labor Office.

IUD (1980) Indus. Union Dep't, v. Amer. Petroleum Inst., 448 U.S. 607, 662 (1980) (weighing the appropriateness of a standard OSHA established).

Kennedy, E. R., T.J. Fischbach, R. Song, P.M. Eller, and S.A. Shulman, (1995). *Guidelines for air sampling and analytical method development and evaluation,* DHHS (NIOSH) Publication No. 95–117.

Kenny LC, Hurley F, Warren ND (2002). Estimation of the risk of contracting pneumoconiosis in the UK coal mining industry. *Ann Occup Hyg* 46(Suppl 1):257–60.

Kizil GV, Donoghue AM (2002). Coal dust exposures in the longwall mines of New South Wales, Australia: a respiratory risk assessment. *Occup Med (Lond).*52(3):137–49.

Kogut, 2003, unpublished PowerPoint presentation, "Coal Mine Dust Inspections.pps"; placed into the public record in connection with the current coal mine dust rulemaking proceedings and available from MSHA's Office of Standards, Regulations, and Variances.

Kogut, J. Memorandum of September 6, 1994, from Jon Kogut, Mathematical Statistician, Denver Safety and Health Technology Center, MSHA, to Ronald J. Schell, Chief, Division of Health, Coal Mine Safety and Health, MSHA, Subject: *Coal Mine Respirable Dust Standard Noncompliance Determinations.*

Kuempel *et al.,* 2009(a) "Emphysema and Pulmonary Impairment in Coal Miners: Quantitative Relationship with Dust Exposure and Cigarette Smoking"; *Journal of Physics Conference Series* 151:1:012024.

Kuempel E, Wheeler M, Smith RJ, Vallyathan V, Green FHY. (2009b). Contributions of dust exposure and cigarette smoking to emphysema severity in coal miners in the United States. *Am J Respir Crit Care Med* 180: 257–264.

Kuempel ED, Tran CL, Bailer AJ, Smith RJ, Dankovic DA, Stayner LT. (2001a).

Methodological issues of using observational human data in lung dosimetry models for particulates. *Sci Total Environ.* 274(1–3),67–77.

Kuempel ED, Tran CL, Smith RJ, Bailer AJ. (2001b). A biomathematical model of particle clearance and retention in the lungs of coal miners. II. Evaluation of variability and uncertainty. *Regul Toxicol Pharmacol.* 34(1),88–101.

Kuempel E, Smith R, Attfield M, Stayner L (1997). Risks of Occupational Respiratory Diseases among U.S. Coal Miners. *App Occup Environ Hyg* 12(12):823–831.

Lin LC, Yang SC, Lu KW (2001). Ventilatory defect in coal workers with simple pneumoconiosis: early detection of functional abnormalities. *Kaohsiung J Med Sci* 17(5):245–52.

Love R, Miller B, Groat S, Hagen S, Cowie H, Johnston P, Hutchison P, Soutar G (1997). Respiratory health effects of opencast coalmining: a cross sectional study of current workers. *Occ Env Med* 54:416–423.

Luppi F, Hiemstra P (2007) Epithelial responses to oxidative stress in chronic obstructive pulmonary disease. Lessons from expression profiling. Am J Respir Crit Care Med 175:527–528.

MacCalman L, Miller B (2009). Mortality in an extended follow-up of British coal workers. Inhaled Particles X. *Manchester Journal of Physics: Conference Series* 151. doi:10.1088/1742–6596/151/1/012050.

Magat W., Viscusi, W., and Huber, J., (1996) "A Reference Lottery Metric for Valuing Health", *Management Science,* (42: 8), pp. 1118–1130.

McCunney R, Morfeld P, Payne S (2009). What component of coal causes coal workers pneumoconiosis? *J Occup Environ Med* 51(4):462–7.

Meijers JM, Swaen GM, Slangen JJ (1997). Mortality of Dutch coal miners in relation to pneumoconiosis, chronic obstructive pulmonary disease, and lung function. *Occup Environ Med.* 54(10),708–713.

Miller B., MacCalman L., Hutchison P. (2007). Mortality over an extended follow-up period in coal workers exposed to respirable dust and quartz. *IOM Research Report.* Research Report TM/07/06: 100 pages.

Miller B., Buchanan D., Hurley J., Hutchison P., Soltar C., Pilkington A., Robertson A. (1997). The effects of exposure to diesel fumes, low-level radiation, and respirable dust and quartz, on cancer mortality in coalminers. *IOM Historical Research Report.* TM/97/041: 139 pages.

Naidoo RN, Robins TG, Solomon A, White N, Franzblau A (2004). Radiographic outcomes among South African coal miners. *Int Arch Occup Environ Health.* 77(7):471–81.

Naidoo RN, Robins TG, Seixas N, Lalloo UG, Becklake M (2005). Differential respirable dust related lung function effects between current and former South African coal miners. *Int Arch Occup Environ Health* 78(4):293–302.

Naidoo RN, Robins TG, Seixas N, Lalloo UG, Becklake M (2006). Respirable coal dust exposure and respiratory symptoms in South-African coal miners: a comparison of current and ex-miners. *J Occup Environ Med* 48(6):581–90.

National Institute for Occupational Safety and Health. (2008). *Work-Related Lung Disease Surveillance Report 2007.* Volume 1. Department of Health and Human Services, Centers for Disease Control and Prevention, DHHS (NIOSH) Publication No. 2008–143a. Morgantown, WV. On the Web: *http://www2a.cdc.gov/drds/WorldReportData/SectionDetails.asp?ArchiveID=1&SectionTitleID=2.*

National Institute for Occupational Safety and Health, (1995). *Criteria for a Recommended Standard, Occupational Exposure to Coal Mine Dust.*

Newman-Taylor A, Coggon D (1999). Industrial injuries benefits for coal miners with obstructive lung disease. *Thorax.* 54(3):282.

Oberdörster G. (1995). Lung particle overload: implications for occupational exposures to particles. *Regul Toxicol Pharmacol.* 21(1),123–35.

Page SJ, Organiscak JA (2000). Suggestion of a cause-and-effect relationship among coal rank, airborne dust, and incidence of workers' pneumoconiosis. *AIHAJ.* 61(6):785–7.

Page S, Volkwein J, Vinson R, Joy G, Mischler, S, Tuchman D, McWilliams, L (2008). *Equivalency of a personal dust monitor to the current United States coal mine respirable dust sampler.* J Environ Monit; 10(1):96–101.)

Peng K, Wang ML, Du Q, Li Y, Attfield MD, Han G, Petsonk EL, Li S, Wu Z (2005). Early change of pulmonary ventilation in new coal miners. *Chin J Ind Hyg Occup Dis* 23:105–108.

Pon MRI, Roper RA, Petsonk EL, Wang ML, Castellan RM, Attfield MD, Wagner GR (2003). Pneumoconiosis prevalence among working coal miners examined in federal chest radiograph surveillance programs—United States, 1996–2002. *MMWR.* 52 (15):336–340.

Ross MH, Murray J. (2004). Occupational respiratory disease in mining. *Occup Med* 54:304–310.

Scarisbrick DA, Quinlan, RM (2002). Health Surveillance for Coal Workers' Pneumoconiosis in the United Kingdom 1998–2000. *Ann Occup Hyg* 46 (Suppl 1):254–256.

Smith DR, Leggat PA (2006). 24 years of pneumoconiosis mortality surveillance in Australia. J Occup Health. 48 (5):309–13.

Soutar CA, Hurley JF, Miller BG, Cowie HA, Buchanan D (2004). Dust concentrations and respiratory risks in coalminers: key risk estimates from the British Pneumoconiosis Field Research. *Occup Environ Med* 61:477–481.

Sunstein, Cass, (2004) "Valuing Life: A Plea for Disaggregation," Duke Law Journal, *54* (November 2004): 385–445.

Taylor, J., (1986). "The retransformed mean after a fitted power transformation"; *Journal of the American Statistical Association* 81:114–118.

U.S. Bureau of Economic Analysis (2010). National Income and Product Accounts Table: Table 1.1.9. Implicit Price Deflators for Gross Domestic Product [Index numbers, 2005=100]. Revised May 27, 2010. *http://www.bea.gov/national/nipaweb/TableView.asp?SelectedTable=13&Freq=Qte&FirstYear=2006&LastYear=2008.*

U.S. Department of Labor, Mine Safety and Health Administration, (1992). Report of the Coal Mine Respirable Dust Task Group. *Review of the Program to Control Respirable Coal Mine Dust in the United States.*

U.S. Department of Labor, Mine Safety and Health Administration, (1993). *Report of the Statistical Task Team of the Coal Mine Respirable Dust Task Group.*

U.S. Department of Labor (1996)., Mine Safety and Health Administration, Report of the Secretary of Labor's Advisory Committee on the Elimination of Pneumoconiosis Among Coal Mine Workers. Washington, DC.

U.S. Department of Labor and U.S. Department of Health and Human Services, (2003). Proposed rule; reopening of record; request for comments; notice of public hearings; correction; close of record. "Determination of Concentration of Respirable Coal Mine Dust;" (68 FR 10940).

U.S. Department of Labor, Mine Safety and Health Administration (2003). Proposed rule; notice of public hearings; close of record. "Verification of Underground Coal Mine Operators' Dust control Plans and Compliance Sampling for Respirable Dust, (68 FR 10784).

U.S. Department of Labor, Mine Safety and Health Administration (2009). Office of Program Evaluation and Information Resources (PEIR). Calendar Year 2008 data.

U.S. Department of Labor, Quantitative Risk Assessment in Support of Proposed Respirable Coal Mine Dust Rule, Jon Kogut, Statistical Methods and Analysis, MSHA Contract DOLJ094R22516, September 2010.

U.S. Environmental Protection Agency. (EPA, 2003) National Primary Drinking Water Regulations; Stage 2 Disinfectants and Disinfection Byproducts Rule; National Primary and Secondary Drinking Water Regulations; Approval of Analytical methods for Chemical Contaminants; Proposed Rule, August 18, 2003. **Federal Register**, Volume 68, Number 159.

Vallyathan V, Green F, Brower P, Attfield M (1997). The Role of Coal Mine Dust Exposure in the Development of Pulmonary Emphysema. *Ann Occup Hyg* 41 (Suppl 1): 352–357.

Viscusi, W. & Aldy, J (2003) "The Value of a Statistical Life: A Critical Review of Market Estimates Throughout the World", *Journal of Risk and Uncertainty,* (27:5–76).

Volkwein, J. C., R.P. Vinson, L.J. McWilliams, D.P. Tuchman, and S.E. Mischler, (June 2004). *Performance of a New Personal Respirable Dust Monitor for Mine Use.* CDC RI 9663.

Volkwein, J.C., R.P. Vinson, S.J. Page, L.J. McWilliams, G.J. Joy, S.E. Mischler and

D.P. Tuchman, (September 2006). *Laboratory and field performance of a continuously measuring personal respirable dust monitor.* CDC RI 9669.

Wang ML, Petsonk EL, Beeckman LA, Wagner GR (1999). Clinically important FEV_1 declines among coal miners: an exploration of previously unrecognized determinants. *Occup Environ Med* 56:837–844.

Wang ML, Wu ZE, Du QG, Petsonk EL, Peng KL, Li YD, Li YD, Han GH, Attfield MD, (2005). A prospective cohort study among new Chinese coal miners: the early pattern of lung function change. *Occup Environ Med* 2:800–805.

Wang ML, Wu ZE, Du QG, Peng KL, Li YD, Li SK, Han GH, Petsonk EL (2007). Rapid decline in forced expiratory volume in 1 second (FEV_1) and the development of bronchitic symptoms among new Chinese coal miners. *J Occup Environ Med* 49 (10):1143–8.

Wang X, Yano E, Nonaka K, Wang M, and Wang Z (1997). Respiratory impairments due to dust exposure: a comparative study among workers exposed to silica, asbestos, and coalmine dust. *Am J Ind Med* 31:495–502.

Wang X, Yu IT, Wong TW, Yano E (1999). Respiratory symptoms and pulmonary function in coal miners: looking into the effects of simple pneumoconiosis. *Am J Ind Med* 35 (2):124–31.

Yeoh CI, Yang, SC (2002). Pulmonary function impairment in pneumoconiotic patients with progressive massive fibrosis. *Chang Gung Med J* 25(2):72–80.

Zhang Q, Huang X (2005). Addition of calcite reduces iron's bioavailability in the Pennsylvania coals—potential use of calcite for the prevention of coal workers' lung diseases. *J Toxicol Environ Health Part A* 68 (19):1663–79.

Zhang Q, Dai J, Ali A, Chen L, Huang X (2002). Roles of bioavailable iron and calcium in coal dust-induced oxidative stress: possible implications in coal workers' lung disease. *Free Radic Res* 36(3):285–94.

XIII. Appendix A—Excessive Concentration Values

The Excessive Concentration Value (ECV) tables ensure that noncompliance is cited only when there is a 95-percent level of confidence that the applicable respirable dust standard has actually been exceeded. A single-shift measurement of respirable coal mine dust that does not exceed the applicable ECV value does not necessarily imply probable compliance with the applicable dust standard (S), let alone compliance at a 95-percent confidence level. For example, using a CMDPSU, a single-shift measurement of 2.14 mg/m^3 would not, according to Table 70–1, indicate noncompliance with sufficient confidence to warrant a citation if the applicable standard S = 2.0 mg/m^3. This does not imply that the mine atmosphere was in compliance on the shift and at the location sampled. On the contrary, unless contradictory evidence was available, this measurement would indicate that the MMU was probably *out* of compliance. However, because there is a small chance that the measurement exceeded the respirable dust standard only because of measurement error, a citation would not be issued. Additional measurements would be necessary to verify the adequacy of control measures. Similarly, a single-shift measurement of 1.92 mg/m^3 would not warrant issuance of a citation; but, because of possible measurement error, neither would it warrant concluding that the mine atmosphere sampled was in compliance.

Furthermore, even if a single-shift measurement were to demonstrate, at a high confidence level, that the mine atmosphere was in compliance at the sampling location on a given shift, additional measurements would be required to demonstrate compliance on each shift. For example, if S = 2.0 mg/m^3, then a valid measurement of 1.65 mg/m^3 would demonstrate compliance on the particular shift and at the particular location sampled. It would not, however, demonstrate compliance on other shifts or at other locations.

I. Derivation of Tables 70–1, 71–1, and 90–1

To understand how the ECVs are derived and justified, one must distinguish between variability due to measurement error and variability due to actual differences in dust concentration. Variability observed among individual measurements obtained at different locations (or at different times) combines both: Dust concentration measurements vary partly because of measurement error and partly because of differences in the dust concentration being measured. The distinction between measurement error and variation in the true dust concentration can more easily be explained by first defining some notational abbreviations.

Dust samples are collected in the same MMU or other mine area on a particular shift. Since it is necessary to distinguish between different samples in the same MMU, let X_i represent the 8-hour MRE dust concentration measurement obtained from the ith sample. The quantity being measured is the true, single-shift average dust concentration at the ith sampling location and is denoted by μ_i. Because of potential measurement errors, μ_i can never be known with complete certainty. A "sample," "measurement," or "observation" always refers to an instance of X_i rather than μ_i.

The overall measurement error associated with an individual measurement is the difference between the measurement (X_i) and the quantity being measured (μ_i). Therefore, this error can be represented as

$$\varepsilon_i = X_i - \mu_i.$$

Equivalently, any measurement can be regarded as the true concentration in the atmosphere sampled, with a measurement error added on:

$$X_i = \mu_i + \varepsilon_i$$

For two different measurements (X_1 and X_2), it follows that X_1 may differ from X_2 not only because of the combined effects of ε_1 and ε_2, but also because μ_1 differs from μ_2.

The probability distribution of X_i around μ_i depends only on the probability distribution of ε_i and should not be confused with the statistical distribution of μ_i, which arises from spatial and/or temporal variability in dust concentration. This variability [*i.e.,* among μ_i for different values of *I*] is not associated with inadequacies of the measurement system, but real variation in exposures due to the fact that contaminant generation rates vary in time and contaminants are heterogeneously distributed in workplace air.

Since noncompliance determinations are made relative to individual sampling locations on individual shifts, derivation of the tables require no assumptions or inferences about the spatial or temporal pattern of atmospheric dust concentrations—*i.e.,* the statistical distribution of μ_i. MSHA is not evaluating dust concentrations averaged across the various sampling locations. Therefore, the degree and pattern of variability observed among different measurements obtained during MSHA sampling are not used in establishing any ECV. Instead, the ECV for each applicable dust standard (S) is based entirely on the distribution of measurement errors (ε_i) expected for the maximum dust concentration in compliance with that standard—*i.e.,* a concentration equal to S itself.

If control filters are used to eliminate potential biases, then each ε_i arises from a combination of four weighing errors (pre- and post-exposure for both the control and exposed filter capsule) and a continuous summation of instantaneous measurement errors accumulated over the course of an eight-hour sample. Since the eight-hour period can be subdivided into an arbitrarily large number of sub-intervals, and some fraction of ε_i is associated with each sub-interval, ε_i can be represented as comprising the sum of an arbitrarily large number of sub-interval

errors. By the Central Limit Theorem, such a summation tends to be normally distributed, regardless of the distribution of sub-interval errors. This does not depend on the distribution of μ_i, which is generally represented as being lognormal.

Any systematic error or bias in the weighing process attributable to the laboratory is mathematically canceled out by subtraction. Any bias that may be associated with day-to-day changes in laboratory conditions or introduced during storage and handling of the filter capsules is also mathematically canceled out. Elimination of the sources of systematic errors identified above, together with the fact that the concentration of respirable dust is defined by section 202(e) of the Mine Act to mean the average concentration of respirable dust measured by an approved sampler unit, indicates that the measurements are unbiased. This means that ε_i is equally likely to be positive or negative and, on average, equal to zero.

Therefore, each ε_i is assumed to be normally distributed, with a mean value of zero and a degree of variability represented by its standard deviation: $\acute{o}_i = i_i \times CV_{total}$.

Since $X_i = \mu_i + \varepsilon_i$, it follows that for a given value of μ_i, X_i is normally distributed with expected value equal to μ_i and standard deviation equal to σ_i. CV_{total}, is the coefficient of variation in measurements corresponding to a given value of μ_i. CV_{total} relates entirely to variability due to measurement errors and not at all to variability in actual dust concentrations.

The proposed procedure for citing noncompliance based on Tables 70–1, 71–1, and 90–1 consists of formally testing a presumption of compliance at every location sampled. Compliance with the applicable dust standard at the ith sampling location is expressed by the relation $\mu_i \leq S$. Max$\{\mu_i\}$ denotes the maximum dust concentration, among all of the sampling locations within an MMU. Therefore, if Max$\{\mu_i\} \leq S$, none of the sampling devices in the MMU were exposed to excessive dust concentration. Since the burden of proof is on MSHA to demonstrate noncompliance, the hypothesis being tested (called the *null hypothesis,* or H_0,) is that the concentration at every location sampled is *in* compliance with the applicable dust standard. It follows that for an MMU, the null hypothesis (H_0) is that max$\{\mu_i\} \leq S$. In other areas, where only one, full-shift measurement is made, the null hypothesis is simply that $\mu_i \leq S$.

The test consists of evaluating the likelihood of measurements under the assumption that H_0 is true. Since $X_i = \mu_i + \varepsilon_i$, X_i (or max$\{X_i\}$ in the case of an MMU) can exceed S even under that assumption. However, based on the normal distribution of measurement errors, it is possible to calculate the probability that a measurement error would be large enough to account for the measurement's exceeding the standard. The greater the amount by which X_i exceeds S, the less likely it is that this would be due to measurement error alone. If, under H_0, this probability is less than five percent, then H_0 can be rejected at a 95-percent confidence level and a citation is warranted. For an MMU, rejecting H_0 (and therefore issuing a citation) is equivalent to determining that $\mu_i > S$ for at least one value of *I.*

Each ECV listed was calculated to ensure that citations will be issued at a confidence level of at least 95 percent. As described in MSHA's February 1994 notice, Coal Mine Respirable Dust Standard Noncompliance Determinations (59 FR 8356, February 18, 1994) and explained further by Kogut (Kogut, J, 1994) the tabled ECV corresponding to each S was calculated on the assumption that, at each sampling location:

$$CV_{total} \quad £ \quad CV_{CTV} = \sqrt{\left(\frac{0.14\ mg/m^3}{\mu_i\ mg/m^3} \times 100\%\right)^2 + (5\%)^2 + (5\%)^2}$$

The July 2000 MSHA and NIOSH proposed joint finding, "Determination of Concentration of Respirable Coal Mine Dust" (65 FR 42068, July 7, 2000), determined that for valid measurements made with an approved sampler unit, CV_{total} is in fact less than CV_{ECV} at all dust concentrations (μ_i).

The situation in which measurement error is most likely to cause an erroneous noncompliance determination is the hypothetical case of $\mu_i = S$ for either a single-shift sample measurement or for all of the measurements made in the same MMU. In that borderline situation—*i.e.,* the worst case consistent with H_0—the standard deviation is identical for all measurement errors. Therefore, the value of σ used in constructing the ECV tables is the product of S and CV_{ECV} evaluated for a dust concentration equal to S:

$$\acute{o} = S \cdot \sqrt{\left(\frac{0.14}{S}\right)^2 + (.05)^2 + (.05)^2}$$

Assuming a normal distribution of measurement errors as explained above, it follows that the probability a single measurement would equal or exceed the critical value

$c = S + 1.64 \cdot \sigma$

is five percent under H_0 when $CV_{total} = CV_{ECV}$. The tabled ECV corresponding to S is derived by raising the critical value c up to the next exact multiple of 0.01 mg/m³.

For example, at a dust concentration (μ_i) just meeting the applicable dust standard of S = 2 mg/m³, CV_{ECV} is 9.95 percent. Therefore, the calculated value of c is 2.326 and the ECV is 2.33 mg/m³. Any valid single-shift measurement at or above this ECV is unlikely to be this large simply because of measurement error. Therefore, any such measurement should result in a noncompliance citation.

The probability that a measurement exceeds the ECV is even smaller if $\mu_i < S$ for any *I.* Furthermore, to the extent that CV_{total} is actually less than CV_{ECV}, σ is actually less than $S \cdot CV_{ECV}$. This results in a lower probability that the critical value would be exceeded under the null hypothesis. Consequently, if any single-shift measurement equals or exceeds c, then H_0 can be rejected at confidence level of at least 95-percent. Since rejection of H_0 implies that $\mu_i > S$ for at least one value of *I,* this should result in a noncompliance citation.

It should be noted that when each of several measurements is separately compared to the ECV table, the probability that at least one ε_i will be large enough to force $X_i \geq$ ECV when $\mu_i \leq S$ is greater than the probability when only a single comparison is made. For example (still assuming S = 2 mg/m³), if CV_{total} is actually 6.6%, then the standard deviation of ε_i is 6.6% of 2.0 mg/m³, or 0.132 mg/m³, when $\mu_i = S$. Using properties of the normal

distribution, the probability that any single measurement would exceed the ECV in this borderline situation is calculated to be 0.0062. However, the probability that at least one of five such measurements results in a citation is $1-(0.9938)^5 = 3.1$ percent. Therefore, the confidence level at which a citation can be issued, based on the maximum of five measurements made in the same MMU on a given shift, is 97%.

The constant 1.64 used in calculating the ECV is a 1-tailed 95-percent confidence coefficient and is derived from the standard normal probability distribution. Since the purpose of the ECV tables is to provide criteria for determining that the true dust concentration strictly exceeds the applicable dust standard and such a determination can occur only when a single-shift measurement is sufficiently high, there is exactly zero probability of erroneously citing noncompliance when a measurement falls below the lower confidence limit. Consequently, the total probability of erroneously citing noncompliance equals the probability that a standard normal random variable exceeds 1.64, which is 5 percent.

II. Derivation of Tables 70–2, 71–2, and 90–2

The same statistical theory underlying the derivation of the ECVs in Tables 70–1, 71–1, and 90–1 applies in constructing the values listed in Tables 70–2, 71–2, and 90–2. This discussion explains the derivation of the listed ECVs in Tables 70–2, 71–2, and 90–2.

The initial step in the derivation process involves addressing uncertainty due to potential measurement errors. Such errors reflect the imprecision inherent in any measurement system and cause individual concentration measurements to deviate above or below the true concentration value in the mine atmosphere sampled by a random but statistically quantifiable amount. Measurement imprecision is quantified by the total coefficient of variation for overall measurement error, or CV_{total}, also sometimes called relative standard deviation (RSD). CV_{total} is defined as the ratio of the standard deviation of measurement errors to the true value of whatever quantity is being measured. It is normally expressed either as a fraction (*e.g.,* 0.1) or as a percent (*e.g.,* 10.5 percent) of the true value. MSHA will address uncertainty due to measurement error by applying a margin of error before issuing a citation for exceeding the applicable standard. This margin of error is designed to ensure that a violation of the applicable standard is cited only when a single, full-shift 8-hour MRE equivalent concentration measurement demonstrates noncompliance with at least 95-percent confidence. To achieve this 95-percent confidence level, the applicable margin of error must be constructed by applying an error factor appropriate for the measurement being considered. The *error factor* is calculated as:

$$EF = 1 + (1.645 \times CV_{total})$$

CV_{total} corresponding to the CPDM has been estimated as 7.8 percent based on in-mine studies and is documented by Volkwein et al. (2006). It relates entirely to variability due to measurement errors and not at all to variability in actual dust concentrations. Therefore, when $CV_{total} = 7.8$ percent, the calculated value of EF is 1.128. If, for example, the sampled occupation is on a 1.5-mg/m^3 standard, the operator would be in violation of the applicable standard if a single, full-shift 8-hour MRE equivalent concentration measurement times the EF exceeds 1.692 mg/m^3 [1.5×1.128]. The ECV corresponding to each applicable standard is derived by simply raising the calculated ECV to the next exact multiple of 0.01 mg/m^3. Therefore, the ECV corresponding to the applicable standard of 1.5 mg/m^3 is 1.70 mg/m^3. Since it is unlikely that any valid end-of shift 8-hour MRE equivalent concentration is this large simply because of measurement error, such a measurement would result in a citation for violation of the applicable standard. The same procedures were followed in calculating ECVs corresponding to other applicable standards.

List of Subjects

30 CFR Part 70

Coal, Mine safety and health, Reporting and recordkeeping requirements, Respirable dust, Underground coal mines.

30 CFR Part 71

Coal, Mine safety and health, Reporting and recordkeeping requirements, Surface coal mines, Underground coal mines.

30 CFR Part 72

Coal, Health standards, Mine safety and health, Training, Underground mines.

30 CFR Part 75

Coal, Mine safety and health, Reporting and recordkeeping requirements, Underground coal mines, Ventilation.

30 CFR Part 90

Coal, Mine safety and health.

Dated: October 1, 2010.

Joseph A. Main,

Assistant Secretary of Labor for Mine Safety and Health.

For the reasons discussed in the preamble, the Mine Safety and Health Administration is proposing to amend 30 CFR parts 70, 71, 72, 75 and 90 as follows:

PART 70—MANDATORY HEALTH STANDARDS FOR UNDERGROUND COAL MINES

1. The authority citation for part 70 is revised to read as follows:

Authority: 30 U.S.C. 811, 813(h), and 957.

2. Section 70.1 is revised to read as follows:

§ 70.1 Scope.

This part 70 sets forth mandatory health standards for each underground coal mine subject to the Federal Mine Safety and Health Act of 1977, as amended.

3. Amend § 70.2 by:

a. Removing the alphabetical paragraph designations and arranging existing definitions in alphabetical order;

b. Adding definitions for "Approved sampling device," "Coal mine dust personal sampler unit *(CMDPSU*)," "Continuous personal dust monitor *(CPDM*)," "Equivalent concentration," "Other designated occupation (ODO)," "Representative samples," "Weekly accumulated exposure (WAE)," and "Weekly permissible accumulated exposure (WPAE);" and

c. Revising definitions for "Act," "Designated area *(DA*)," "Mechanized mining unit (MMU)," "Normal production shift," and "Quartz."

The additions and revisions are revised to read as follows:

§ 70.2 Definitions.

Act. The Federal Mine Safety and Health Act of 1977, Public Law 91–173, as amended by Public Law 95–164 and Public Law 109–236.

* * * * *

Approved sampling device. A sampling device approved by the Secretary and Secretary of Health and Human Services (HHS) under part 74 of this title.

* * * * *

Coal mine dust personal sampler unit (CMDPSU). A personal sampling device approved under part 74, subpart B, of this title.

Continuous personal dust monitor (CPDM). A personal sampling device approved under part 74, subpart C of this title.

Designated area (DA). An area of a mine identified by the operator in the mine ventilation plan, approved by the District Manager, and identified by a four-digit identification number assigned by MSHA.

* * * * *

Equivalent concentration. The concentration of respirable coal mine dust expressed in milligrams per cubic meter of air (mg/m^3), determined by dividing the weight of dust in milligrams collected on the filter of an approved sampling device by the volume of air in cubic meters passing through the collection filter (sampling time in minutes times the sampling airflow rate in cubic meters per minute), and then converting this concentration to an equivalent 8-hour exposure as measured by the Mining Research Establishment (MRE) instrument. When the approved sampling device is:

(1) The CMDPSU, the equivalent concentration is determined by first multiplying the concentration of respirable coal mine dust by the MRE conversion factor prescribed by the Secretary and then normalizing this quantity to an 8-hour exposure measurement by multiplying the MRE-equivalent concentration by the factor *t/480,* where *t* is the sampling time in minutes if longer than 8 hours.

(2) The CPDM, the device shall be programmed to directly report the end-of-shift equivalent concentration as an MRE 8-hour equivalent concentration.

(3) Either the CMDPSU or CPDM and the sampled work shift is less than 8 hours, the value of *t* used for normalizing the MRE-equivalent concentration to an 8-hour exposure measurement shall be 480 minutes.

Mechanized mining unit (MMU). A unit of mining equipment including hand loading equipment used for the production of material; or a specialized unit which uses mining equipment other than specified in § 70.207(b). Each MMU is assigned a four-digit identification number by MSHA, which is retained by the MMU. However, when:

(1) Two sets of mining equipment are used in a series of working places within the same working section and only one production crew is employed, the two sets of equipment are identified as a single MMU.

(2) Two or more sets of mining equipment are used in a series of working places within the same working section and two or more production crews are employed, each set of mining equipment shall be identified as a separate MMU.

* * * * *

Normal production shift. A production shift during which the amount of material produced by an MMU is at least equal to the average production recorded by the operator for the most recent 30 production shifts or for all production shifts if fewer than 30 shifts of production data are available.

Other designated occupation (ODO). Other occupation on a mechanized mining unit that is designated for sampling in addition to the Designated Occupation. Each ODO will be identified by a four-digit identification number assigned by MSHA.

* * * * *

Quartz. Crystalline silicon dioxide (SiO_2) as measured by:

(1) MSHA Analytical Method P–7: Infrared Determination of Quartz in Respirable Coal Mine Dust; or

(2) Any method approved by MSHA as providing a measurement of quartz equivalent to that obtained by MSHA Analytical Method P–7.

* * * * *

Representative samples. Respirable dust samples that reflect typical dust concentration levels and normal mining activity in the active workings during which the amount of material produced is equivalent to a normal production shift.

* * * * *

Weekly accumulated exposure (WAE). The total amount of exposure to respirable coal mine dust, expressed in mg-hr/m^3, accumulated by an occupation during a work week (Sunday thru Saturday), determined by multiplying the daily individual end-of-shift equivalent concentration measurements by 8 hours, which yields the total amount of exposure accumulated over the course of the particular shift sampled, and then adding together all of the daily accumulated exposures.

Weekly permissible accumulated exposure (WPAE). The maximum amount of accumulated exposure to respirable coal mine dust, expressed in mg-hr/m^3, permitted to be received by an occupation during a 40-hour work week (Sunday thru Saturday), determined by multiplying the applicable standard by 40 hours.

4. Subpart B is revised to read as follows:

Subpart B—Dust Standards

Sec.
70.100 Respirable dust standards.
70.101 Respirable dust standard when quartz is present.

§ 70.100 Respirable dust standards.

(a) Each operator shall continuously maintain the average concentration of respirable dust in the mine atmosphere during each shift to which each miner in the active workings of each mine is exposed, as measured with an approved sampling device and in terms of an equivalent concentration, at or below:

(1) 2.0 milligrams of respirable dust per cubic meter of air (mg/m^3).

(2) 1.7 mg/m^3 as of [date 6 months after the effective date of the final rule].

(3) 1.5 mg/m^3 as of [date 12 months after the effective date of the final rule].

(4) 1.0 mg/m^3 as of [date 24 months after the effective date of the final rule].

(b) Each operator shall continuously maintain the average concentration of respirable dust within 200 feet outby the working faces of each section in the intake airways as measured with an approved sampling device and in terms of an equivalent concentration at or below:

(1) 1.0 mg/m^3.

(2) 0.5 mg/m^3 as of [date 6 months after the effective date of the final rule].

§ 70.101 Respirable dust standard when quartz is present.

(a) Each operator shall continuously maintain the average concentration of respirable quartz dust in the mine atmosphere during each shift to which each miner in the active workings of each mine is exposed at or below 0.1 mg/m^3 (100 micrograms per cubic meter or μg/m^3) as measured with an approved sampling device and in terms of an equivalent concentration.

(b) When the concentration of respirable quartz dust exceeds 100 μg/m^3, the operator shall continuously maintain the average concentration of respirable dust in the mine atmosphere during each shift to which each miner in the active workings is exposed as measured with an approved sampling device and in terms of an equivalent concentration at or below the applicable dust standard. The applicable dust standard is computed by dividing the percent of quartz into the number 10. The application of this formula shall not result in an applicable dust standard that exceeds the standard established by § 70.100(a).

Example: Assume the sampled MMU or DA is on a 1.0-mg/m^3 dust standard. Suppose a valid respirable dust sample with an equivalent concentration of 1.0 mg/m^3 contains 12.3% of quartz dust, which corresponds to a quartz concentration of 123 μg/m^3. Therefore, the average concentration of respirable dust in the mine atmosphere associated with that MMU or DA shall be maintained on each shift at or below 0.8 mg/m^3 (10/12.3% = 0.8 mg/m^3).

5. Subpart C is revised to read as follows:

Subpart C–Sampling Procedures

Sec.
70.201 Sampling; general and technical requirements.
70.202 Certified person; sampling.
70.203 Certified person; maintenance and calibration.
70.204 Approved sampling devices; maintenance and calibration.
70.205 Approved sampling devices; operation; air flowrate.
70.206 CPDM Performance Plan.
70.207 Sampling of mechanized mining units; requirements when using a CMDPSU.
70.208 Sampling of mechanized mining units; requirements when using a CPDM.
70.209 Sampling of designated areas.
70.210 Respirable dust samples; transmission by operator.
70.211 Respirable dust samples; report to operator; posting.
70.212 Status change reports.

§ 70.201 Sampling; general and technical requirements.

(a) Approved coal mine dust personal sampler units (CMDPSU) shall be used to take samples of the concentration of respirable coal mine dust for the designated occupation (DO) in each MMU as required by this part until replaced by continuous personal dust monitors (CPDM). After [date 12 months after the effective date of the final rule], only approved CPDMs shall be used to sample DOs in each MMU unless notified by the Secretary.

(b) Approved CMDPSUs shall be used to take samples of the concentration of respirable coal mine dust in each designated area (DA) associated with an MMU as required by this part until replaced by CPDMs. After [date 18 months after the effective date of the final rule] or upon implementation of the use of CPDMs, DAs associated with an MMU will be redesignated as Other Designated Occupations (ODO).

(c) After [date 18 months after the effective date of the final rule], only approved CPDMs shall be used to take samples of the concentration of respirable coal mine dust for each ODO as required by this part unless notified by the Secretary.

(d) Approved CMDPSUs or CPDMs shall be used to take samples of the concentration of respirable coal mine dust in each DA that is not associated with an MMU as required by this part.

(e) Sampling devices shall be worn or carried directly to and from the MMU or DA to be sampled and shall be operated portal-to-portal. Sampling devices shall remain with the occupation or DA being sampled and shall be operational during the entire shift, which includes the total time spent in the MMU or DA and while travelling to and from the mining section or area being sampled. If the work shift to be sampled is longer than 12 hours and the sampling device is:

(1) A CMDPSU, the operator shall switch-out the unit's sampling pump prior to the 13th-hour of operation.

(2) A CPDM, the operator shall switch-out the CPDM with a fully charged device prior to the 13th-hour of operation.

(f) If using a CMDPSU, one control filter shall be used for each shift of sampling. Each control filter shall:

(1) Have the same pre-weight date (noted on the dust data card) as the filters used for sampling;

(2) Remain plugged at all times;

(3) Be exposed to the same time, temperature, and handling conditions as the filters used for sampling;

(4) Be kept with the exposed samples after sampling.

(g) Records showing the length of each production shift for each MMU shall be made and retained for at least six months and shall be made available for inspection by authorized representatives of the Secretary and the representative of miners, and submitted to the District Manager when requested in writing.

(h) Upon request from the District Manager, the operator shall submit the date and time any respirable dust sampling required by this part will begin. This information shall be submitted at least 48 hours prior to scheduled sampling.

(i) To establish a normal production shift, the operator shall record the amount of run-of-mine material produced by each MMU during each shift to determine the average production for the most recent 30 production shifts or for all production shifts if fewer than 30 shifts of production data are available. Production records shall be retained for at least six months and shall be made available for inspection by authorized representatives of the Secretary and the representative of miners.

(j) Operators using CPDMs shall provide training to all miners expected to wear a CPDM. The training shall be completed prior to a miner being required to wear a CPDM and then every 12 months thereafter. The training shall include:

(1) Explaining the basic features and capabilities of the CPDM;

(2) How to set-up the CPDM for compliance sampling.

(3) A discussion of the various types of information displayed by the CPDM and how to access that information;

(4) How to start and stop a short-term sample run during compliance sampling; and

(5) The importance of continuously monitoring dust concentrations and properly wearing the CPDM.

(k) An operator shall keep a record of the CPDM training at the mine site for two years after completion of the training. An operator may keep the record elsewhere if the record is immediately accessible from the mine site by electronic transmission. Upon request from an authorized representative of the Secretary, Secretary of HHS, or representative of miners, the operator shall promptly provide access to any such training records.

§ 70.202 Certified person; sampling.

(a) The respirable dust sampling required by this part shall be performed by a certified person.

(b) To be certified, a person shall complete the applicable MSHA course of instruction and pass the MSHA examination demonstrating competency in sampling procedures. Persons not certified in sampling, and those certified only in maintenance and calibration procedures in accordance with § 70.203(b), are not permitted to collect respirable dust samples required by this part or handle approved sampling devices when being used in sampling.

(c) To maintain certification, a person must pass the MSHA examination demonstrating competency in sampling procedures every three years.

(d) MSHA may revoke a person's certification for failing to pass the MSHA examination or to properly carry out the required sampling procedures.

§ 70.203 Certified person; maintenance and calibration.

(a) Approved sampling devices shall be maintained and calibrated by a certified person.

(b) To be certified, a person shall complete the applicable MSHA course of instruction and pass the MSHA examination demonstrating competency in maintenance and calibration procedures for approved sampling devices. If using a CMDPSU, necessary maintenance of the sampling head assembly can be performed by persons certified in sampling or in maintenance and calibration.

(c) To maintain certification, a person must pass the MSHA examination demonstrating competency in maintenance and calibration procedures every three years.

(d) MSHA may revoke a person's certification for failing to pass the MSHA examination or to properly carry out the required maintenance and calibration procedures.

§ 70.204 Approved sampling devices; maintenance and calibration.

(a) Approved sampling devices shall be maintained as approved under part 74 of this title and calibrated in accordance with MSHA Informational Report IR 1240 (1996) "Calibration and Maintenance Procedures for Coal Mine Respirable Dust Samplers" or in accordance with the manufacturer's recommendations if using a CPDM. Only persons certified in maintenance and calibration can perform maintenance work on the pump unit of approved sampling devices.

(b) Sampling devices shall be calibrated at the flowrate of 2.0 liters of air per minute (L/min), or at a different flowrate recommended by the manufacturer or prescribed by the Secretary or Secretary of HHS for the particular device, before they are put into service and, thereafter, at time intervals recommended by the manufacturer or prescribed by the Secretary or Secretary of HHS.

(c) If using a CMDPSU, sampling devices shall be examined and tested by a person certified in sampling or in maintenance and calibration within 3 hours before the start of the shift on which the approved sampling devices will be used to collect respirable dust samples. This is to assure that the sampling devices are clean and in proper working condition. This examination and testing shall include the following:

(1) Examination of all components of the cyclone assembly to assure that they are clean and free of dust and dirt. This includes examining the interior of the connector barrel (located between the cassette assembly and vortex finder), vortex finder, cyclone body and grit pot;

(2) Examination of the inner surface of the cyclone body to assure that it is free of scoring or scratch marks on the inner surface of the cyclone where the air flow is directed by the vortex finder into the cyclone body;

(3) Examination of the external hose connecting the pump unit to the sampling head assembly to assure that it is clean and free of leaks; and

(4) Examination of the clamping and positioning of the cyclone body, vortex finder and cassette to assure that they are rigid, in alignment, firmly in contact and airtight.

(5) Testing the voltage of each battery while under actual load to assure the battery is fully charged. This requires that a fully assembled and examined sampling head assembly be attached to the pump inlet with the pump unit running when the voltage check is made. The voltage for nickel cadmium cell batteries shall not be lower than the product of the number of cells in the battery multiplied by 1.25. The voltage for other than nickel cadmium cell batteries shall not be lower than the product of the number of cells in the battery multiplied by the manufacturer's nominal voltage per cell value.

(d) If using a CPDM, the certified person in sampling or in maintenance and calibration shall follow the examination, testing and set-up procedures contained in the approved CPDM Performance Plan.

(e) MSHA Informational Report IR 1240 (1996) referenced in paragraph (a) of this section is incorporated-by-reference. This incorporation-by-reference was approved by the Director of the Federal Register in accordance with 5 U.S.C. 552(a) and 1 CFR part 51. Copies may be inspected or obtained at MSHA, Coal Mine Safety and Health, 1100 Wilson Blvd., Room 2424, Arlington, Virginia 22209–3939 and at each MSHA Coal Mine Safety and Health district office. Copies may be inspected at the National Archives and Records Administration (NARA). For information on the availability of this material at NARA, call 202–741–6030, or go to: *http://www.archives.gov/federal_register/code_of_federal_regulations/ibr_locations.html.*

§ 70.205 Approved sampling devices; operation; air flowrate.

(a) Approved sampling devices shall be operated at the flowrate of 2.0 L/min, or at a different flowrate recommended by the manufacturer or prescribed by the Secretary or Secretary of HHS.

(b) If using a CMDPSU, each approved sampling device shall be examined each shift by a person certified in sampling during:

(1) The second hour after being put into operation to assure it is in the proper location, operating properly and at the proper flowrate. If the proper flowrate is not maintained, necessary adjustments shall be made by the certified person. This examination is not required if the sampling device is being operated in a breast or chamber of an anthracite coal mine where the full box mining method is used.

(2) The last hour of operation to assure that the sampling device is operating properly and at the proper flowrate. If the proper flowrate is not maintained, the respirable dust sample shall be transmitted to MSHA with a notation by the certified person on the back side of the dust data card stating that the proper flowrate was not maintained. Other events occurring during the collection of respirable dust samples that may affect the validity of the sample, such as dropping of the sampling head assembly onto the mine floor, shall be noted on the back side of the dust data card.

(c) If using a CPDM, the certified person shall examine the sampling device during the shift in accordance with the procedures contained in the approved CPDM Performance Plan.

§ 70.206 CPDM Performance Plan.

(a) If using a CPDM, the operator shall have an approved CPDM Performance Plan to ensure that no miner working on an MMU shall be exposed to concentrations of respirable coal mine dust in excess of the applicable standard. The operator shall develop a proposed CPDM Performance Plan and submit it to the District Manager. The proposed CPDM Performance Plan shall not be implemented until approved by the District Manager.

(1) The mine operator shall notify the representative of miners at least 5 days prior to submission of a proposed CPDM Performance Plan and any proposed revision to a CPDM Performance Plan. If requested, the mine operator shall provide a copy to the representative of miners at the time of notification;

(2) A copy of the proposed CPDM Performance Plan, and a copy of any proposed revision, submitted for approval shall be made available for inspection by the representative of miners; and

(3) A copy of the proposed CPDM Performance Plan, and a copy of any proposed revision, submitted for approval shall be posted on the mine bulletin board at the time of submittal. The proposed plan or proposed revision shall remain posted until it is approved, withdrawn, or denied.

(4) Following receipt of the proposed plan or proposed revision, the representative of miners may submit timely comments to the District Manager, in writing, for consideration during the review process. A copy of these comments shall also be provided to the operator by the District Manager upon request.

(b) The approved CPDM Performance Plan shall include the names or titles of the responsible mine officials who are designated by the operator and the following information:

(1) The occupations in each MMU that will be sampled using a CPDM. Each sampled occupation shall be assigned a 9-digit identification number as follows:

(i) The first four digits identify the MMU being sampled;

(ii) The next three digits identify the sampled occupation;

(iii) The eighth digit identifies the particular shift being sampled (*e.g.*, 1st, 2nd or 3rd); and

(iv) The final digit identifies the particular work crew that the wearer of the sampling device is assigned to at mines employing multiple crews to work the same shift on different days during the same calendar week (*e.g.*, 1st crew, 2nd crew, etc.).

(2) The pre-operational examinations, testing and set-up procedures to verify the operational readiness of the sampling device before each sampling shift;

(3) Procedures that address downloading of end-of-shift sampling information, and validation, certification and posting of reported results;

(4) Procedures for weekly transmittals of certified sampling data files electronically to MSHA;

(5) The routine daily and other required scheduled maintenance procedures;

(6) Procedures or methods for verifying the calibration of each CPDM; and

(7) The frequency with which dust concentrations being reported by the CPDM shall be monitored by the designated mine official during the shift;

(8) The types of actions permitted to be taken during the shift to ensure the environment of the occupation being sampled remains in compliance at the end of the shift.

(9) Any other information required by the District Manager.

(c) The approved CPDM Performance Plan and any revisions shall be:

(1) Provided upon request to the representative of miners by the operator following notification of approval;

(2) Made available for inspection by the representative of miners; and

(3) Posted on the mine bulletin board within 1 working day following notification of approval, and shall remain posted for the period that the plan is in effect.

(d) The District Manager may require an approved CPDM Performance Plan to be revised if the District Manager determines that the plan is inadequate to protect miners from exposure to concentrations of respirable dust in excess of the applicable standard.

§ 70.207 Sampling of mechanized mining units; requirements when using a CMDPSU.

(a) Each operator shall take five valid representative samples from the designated occupation (DO) in each MMU during each bimonthly period. DO samples shall be collected on consecutive normal production shifts or normal production shifts each of which is worked on consecutive days. The bimonthly periods are:

January 1–February 28 (29)
March 1–April 30
May 1–June 30
July 1–August 31
September 1–October 31
November 1–December 31.

(b) Unless otherwise directed by the District Manager, the DO samples shall be taken by placing the approved sampling device as specified in paragraphs (b)(1) through (b)(10) of this section.

(1) *Conventional section using cutting machine.* On the cutting machine operator or on the cutting machine within 36 inches inby the normal working position;

(2) *Conventional section shooting off the solid.* On the loading machine operator or on the loading machine within 36 inches inby the normal working position;

(3) *Continuous mining section other than auger-type.* On the continuous mining machine operator or on the continuous mining machine within 36 inches inby the normal working position;

(4) *Continuous mining machine; auger-type.* On the jacksetter who works nearest the working face on the return air side of the continuous mining machine or at a location that represents the maximum concentration of dust to which the miner is exposed;

(5) *Scoop section using cutting machine.* On the cutting machine operator or on the cutting machine within 36 inches inby the normal working position;

(6) *Scoop section, shooting off the solid.* On the coal drill operator or on the coal drill within 36 inches inby the normal working position;

(7) *Longwall section.* On the miner who works nearest the return air side of the longwall working face or along the working face on the return side within 48 inches of the corner;

(8) *Hand loading section with a cutting machine.* On the cutting machine operator or on the cutting machine within 36 inches inby the normal working position;

(9) *Hand loading section shooting off the solid.* On the hand loader exposed to the greatest dust concentration or at a location that represents the maximum concentration of dust to which the miner is exposed;

(10) *Anthracite mine sections.* On the hand loader exposed to the greatest dust concentration or at a location that represents the maximum concentration of dust to which the miner is exposed.

(c) When the respirable dust standard is changed in accordance with § 70.101, the new applicable standard shall become effective on the first production shift following receipt of the notification of such change from MSHA.

(1) If all samples from the most recent bimonthly sampling period do not exceed the new applicable standard, respirable dust sampling of the MMU shall begin on the first production shift during the next bimonthly period following receipt of such change from MSHA.

(2) If any sample from the most recent bimonthly sampling period exceeds the new applicable standard, the operator shall make necessary adjustments to the dust control parameters in the mine ventilation plan within three days and then collect samples from the affected MMU on consecutive normal production shifts until five valid representative samples are collected. The samples collected will be treated as normal bimonthly samples under this part.

(d) If a normal production shift is not achieved, the DO sample for that shift may be voided by MSHA. However, any sample, regardless of production, that exceeds the applicable standard by at least 0.1 mg/m^3 shall be used to determine the average concentration for that MMU.

(e) No valid single-shift equivalent concentration shall meet or exceed the excessive concentration value (ECV) that corresponds to the applicable standard in Table 70–1.

(f) Upon issuance of a citation for a violation of the applicable standard involving a DO in an MMU, paragraphs (a) and (c)(2) of this section shall not apply to that MMU until the violation is abated in accordance with paragraph (g) of this section.

(g) During the time for abatement fixed in a citation for violation of the applicable standard, the operator shall take the following actions:

(1) Make approved respiratory equipment available to affected miners in accordance with § 72.700 of this chapter;

(2) Submit to the District Manager for approval proposed corrective actions to lower the concentration of respirable dust to within the applicable standard; and

(3) Upon approval by the District Manager, implement the proposed corrective actions and then sample the environment of the affected occupation in the MMU in the citation on each normal production shift until five valid representative samples are taken.

(h) A citation for violation of the applicable standard shall be terminated

by MSHA when the equivalent concentration of each of the five valid operator abatement samples is at or below the applicable standard, the operator has submitted to the District Manager revised dust control parameters as part of the mine ventilation plan applicable to the MMU in the citation, and such changes have been approved by the District Manager. The revised parameters shall reflect the control measures used to abate the violation.

(i) When the equivalent concentration of one or more valid samples collected by the operator under this section exceeds the applicable standard but is less than the applicable ECV in Table 70–1, the operator shall:

(1) Make approved respiratory equipment available to affected miners in accordance with § 72.700 of this chapter;

(2) Take corrective action to lower the concentration of respirable dust to or below the applicable standard.

(3) Record the corrective actions taken in the same manner as the records for hazardous conditions required by § 75.363 of this chapter.

TABLE 70–1—EXCESSIVE CONCENTRATION VALUES (ECV) BASED ON SINGLE-SHIFT CMDPSU EQUIVALENT CONCENTRATION MEASUREMENTS

Applicable standard (mg/m³)	ECV (mg/m³)
2.0	2.33
1.9	2.22
1.8	2.12
1.7	2.01
1.6	1.90
1.5	1.79
1.4	1.69
1.3	1.59
1.2	1.47
1.1	1.37
1.0	1.26
0.9	1.16
0.8	1.05
0.7	0.95
0.6	0.85
0.5	0.74
0.4	0.65
0.3	0.54
0.2	0.44

§ 70.208 Sampling of mechanized mining units; requirements when using a CPDM.

(a) Each operator shall sample:

(1) The designated occupation (DO) in each MMU during each production shift, seven days per week (Sunday through Saturday), 52 weeks per year; and

(2) The Other Designated Occupations (ODO) specified in paragraphs (b)(1) through (b)(10) of this section in each MMU during each production shift for 14 consecutive days during each quarterly period. The quarterly periods are:

January 1–March 31
April 1–June 30
July 1–September 30
October 1–December 31.

(b) Unless otherwise directed by the District Manager, the CPDM shall be worn by the miner assigned to perform the duties of the DO and ODOs specified in paragraphs (b)(1) through (b)(10) or by the District Manager for each type of MMU.

(1) *Conventional section using cutting machine.* DO—The cutting machine operator;

(2) *Conventional section shooting off the solid.* DO—The loading machine operator;

(3) *Continuous mining section other than auger-type.* DO—The continuous mining machine operator or mobile bridge operator when using continuous haulage; ODOs—The roof bolter operator who works nearest the working face on the return air side of the continuous mining machine; and the shuttle car operators on MMUs using blowing face ventilation;

(4) *Continuous mining section using auger-type machine.* DO—The jacksetter who works nearest the working face on the return air side of the continuous mining machine;

(5) *Scoop section using cutting machine.* DO—The cutting machine operator;

(6) *Scoop section, shooting off the solid.* DO—The coal drill operator;

(7) *Longwall section.* DO—The longwall operator working on the tailgate side of the longwall mining machine; ODOs—The jacksetter who works nearest the return air side of the longwall working face; and on the mechanic;

(8) *Hand loading section with a cutting machine.* DO—The cutting machine operator;

(9) *Hand loading section shooting off the solid.* DO—The hand loader exposed to the greatest dust concentration; and

(10) *Anthracite mine sections.* DO—The hand loader exposed to the greatest dust concentration.

(c) When the respirable dust standard is changed in accordance with § 70.101, the new applicable standard shall become effective on the first production shift following receipt of notification of such change from MSHA.

(d) No valid end-of-shift equivalent concentration shall meet or exceed the excessive concentration value (ECV) that corresponds to the applicable standard in Table 70–2.

(e) No weekly accumulated exposure shall exceed the weekly permissible accumulated exposure.

(f) When a valid end-of-shift equivalent concentration meets or exceeds the applicable ECV in Table 70–2, or a weekly accumulated exposure exceeds the weekly permissible accumulated exposure, the operator shall take the following actions before production begins on the next shift:

(1) Make approved respiratory equipment available to affected miners in accordance with § 72.700 of this chapter;

(2) Implement corrective actions to assure compliance with the applicable standard on the next and other subsequent production shifts;

(3) Submit to the District Manager for approval, within 3 days of determining that the applicable standard was exceeded, the corrective actions implemented to lower the concentration of respirable dust to within the applicable standard as a proposed change to the approved ventilation plan;

(4) Review the adequacy of the approved CPDM Performance Plan. Within 7 calendar days following posting of the end-of-shift equivalent concentration or weekly accumulated exposure on the mine bulletin board, the operator shall submit any plan revisions to the District Manager for approval; and

(5) Record the reported excessive dust condition as part of and in the same manner as the records for hazardous conditions required by § 75.363 of this chapter. The record shall include:

(i) Dates of sampling;

(ii) Lengths of sampled shifts;

(iii) Locations within the mine and the occupation where samples were collected;

(iv) The end-of-shift equivalent concentration or weekly accumulated exposure and weekly permissible accumulated exposure; and

(v) Corrective actions taken to reduce the concentration of respirable coal mine dust to or below the applicable standard.

(g) When a valid end-of-shift equivalent concentration exceeds the applicable standard but is less than the applicable ECV in Table 70–2, the operator shall take the following actions:

(1) Make approved respiratory equipment available to affected miners in accordance with § 72.700 of this chapter;

(2) Implement corrective actions to assure compliance with the applicable standard on the next and subsequent production shifts;

(3) Record the reported excessive dust condition as part of and in the same manner as the records for hazardous conditions required by § 75.363 of this chapter. The record shall include:

(i) Date of sampling;

(ii) Length of the sampled shift;

(iii) Location within the mine and the occupation where the sample was collected;

(iv) The end-of-shift equivalent concentration; and

(v) Corrective action taken to reduce the concentration of respirable coal mine dust to or below the applicable standard; and

(4) Review the adequacy of the approved CPDM Performance Plan. The operator shall submit to the District Manager for approval any plan revisions within 7 calendar days following posting of the end-of-shift equivalent concentration on the mine bulletin board.

TABLE 70–2—EXCESSIVE CONCENTRATION VALUES (ECV) BASED ON SINGLE-SHIFT CPDM EQUIVALENT CONCENTRATION MEASUREMENTS

Applicable Standard (mg/m^3)	ECV (mg/m^3)
2.0	2.26
1.9	2.15
1.8	2.04
1.7	1.92
1.6	1.81
1.5	1.70
1.4	1.59
1.3	1.47
1.2	1.36
1.1	1.25
1.0	1.13
0.9	1.02
0.8	0.91
0.7	0.80
0.6	0.68
0.5	0.57
0.4	0.46
0.3	0.34
0.2	0.23

(h) During the period of [effective date of rule] through [effective date plus 24 months], if an operator is unable to maintain compliance with the applicable standard for an MMU and has determined that all feasible engineering or environmental controls are being used on the MMU, the operator may request through the District Manager that the Administrator for Coal Mine Safety and Health approve the use of supplementary controls for a period not to exceed 6 months, including worker rotation, in conjunction with monitoring miners' exposures with CPDMs to reduce affected miners' dust exposures. The operator shall provide a report that evaluates the specific situation in the MMU, outlines all controls that will be used during this time period to prevent miners from being exposed to concentrations exceeding the applicable standard, addresses the actions that will be taken to reduce miners' exposures through the use of engineering and environmental controls, and establishes the time line for the implementation of the engineering and environmental controls. The District Manager will address this request through the approval process associated with the mine ventilation plan.

§ 70.209 Sampling of designated areas.

(a) The operator shall sample each DA for five consecutive production shifts every calendar quarter using a CMDPSU or CPDM. The quarterly periods are:

January 1–March 31
April 1–June 30
July 1–September 30
October 1–December 31

(b) When the respirable dust standard is changed in accordance with § 70.101, the new applicable standard shall become effective on the first production shift following receipt of the notification of such change from MSHA.

(1) If all samples from the most recent quarterly sampling period do not exceed the new applicable standard, respirable dust sampling of the DA shall begin on the first production shift during the next quarterly period following receipt of such change from MSHA.

(2) If any sample from the most recent quarterly sampling period exceeds the new applicable standard, the operator shall make necessary adjustments to the dust control parameters in the mine ventilation plan within three days and then collect samples from the affected DA on consecutive shifts until five valid representative samples are collected. The samples collected will be treated as normal quarterly samples under this part.

(c) If using a CMDPSU, no valid single-shift sample equivalent concentration shall meet or exceed the ECV that corresponds to the applicable standard in Table 70–1; or if using a CPDM, no valid end-of-shift equivalent concentration shall meet or exceed the applicable ECV in Table 70–2.

(d) Upon issuance of a citation for a violation of the applicable standard, paragraphs (a) and (b)(2) of this section shall not apply to that DA until the violation is abated in accordance with paragraph (e) of this section.

(e) During the time for abatement fixed in a citation for violation of the applicable standard, the operator shall take the following actions:

(1) Make approved respiratory equipment available to affected miners in accordance with § 72.700 of this chapter;

(2) Submit to the District Manager for approval proposed corrective actions to lower the concentration of respirable dust to within the applicable standard; and

(3) Upon approval by the District Manager, implement the proposed corrective actions and then sample the affected DA on each production shift until five valid representative samples are taken.

(f) A citation for violation of the applicable standard shall be terminated by MSHA when the equivalent concentration of each of the five valid operator abatement samples is at or below the applicable standard, the operator has submitted to the District Manager revised dust control parameters as part of the mine ventilation plan applicable to the DA in the citation, and such changes have been approved by the District Manager. The revised parameters shall reflect the control measures used to abate the violation.

(g) If an operator uses a CPDM to meet the requirements in paragraph (a) of this section and a valid end-of-shift equivalent concentration exceeds the applicable standard but is less than the applicable ECV in Table 70–2, the operator shall take the following actions:

(1) Make approved respiratory equipment available to affected miners in accordance with § 72.700 of this chapter;

(2) Implement corrective actions to assure compliance with the applicable standard on the next and other subsequent production shifts; and

(3) Record the reported excessive dust condition as part of and in the same manner as the records for hazardous conditions required by § 75.363 of this chapter. The record shall include:

(i) Date of sampling;

(ii) Length of the sampled shift;

(iii) Location within the mine and the occupation where the sample was collected;

(iv) The end-of-shift equivalent concentration; and

(v) Corrective action implemented to reduce the concentration of respirable coal mine dust to or below the applicable standard; and

(4) Review the adequacy of the approved CPDM Performance Plan. The operator shall submit to the District Manager for approval any plan revisions within 7 calendar days following posting of the end-of-shift equivalent

concentration on the mine bulletin board.

(h) MSHA approval of the operator's ventilation system and methane and dust control plan may be revoked based on samples taken by MSHA or in accordance with this part 70.

§ 70.210 Respirable dust samples; transmission by operator.

(a) If using a CMDPSU, the operator shall transmit within 24 hours after the end of the sampling shift all samples collected to fulfill the requirements of this part in containers provided by the manufacturer of the filter cassette to: Respirable Dust Processing Laboratory, Pittsburgh Safety and Health Technology Center, Cochrans Mill Road, Building 38, P.O. Box 18179, Pittsburgh, Pennsylvania 15236–0179, or to any other address designated by the District Manager.

(b) The operator shall not open or tamper with the seal of any filter cassette or alter the weight of any filter cassette before or after it is used to fulfill the requirements of this part.

(c) A person certified in sampling shall properly complete the dust data card that is provided by the manufacturer for each filter cassette. The card shall have an identification number identical to that on the cassette used to take the sample and be submitted to MSHA with the sample. Each card shall be signed by the certified person who actually performed the required examinations during the sampling shift and shall include that person's MSHA Individual Identification Number (MIIN). Respirable dust samples with data cards not properly completed shall be voided by MSHA.

(d) All respirable dust samples collected by the operator shall be considered taken to fulfill the sampling requirements of part 70, 71 or 90 of this title, unless the sample has been identified in writing by the operator to the District Manager, prior to the intended sampling shift, as a sample to be used for purposes other than required by part 70, 71 or 90 of this title.

(e) Respirable dust samples received by MSHA in excess of those required by this part shall be considered invalid samples.

(f) If using a CPDM, the designated mine official shall validate, certify and transmit electronically to MSHA within 12 hours after the end of the last sampling shift of the work week all daily sample and error data file information collected during the previous calendar week (Sunday through Saturday) and stored in the CPDM. All CPDM data files transmitted to MSHA shall be maintained by the operator for at least 12 months.

§ 70.211 Respirable dust samples; report to operator; posting.

(a) MSHA shall provide the operator a report with the following data on respirable dust samples submitted in accordance with this part:

(1) The mine identification number;

(2) The locations within the mine from which the samples were taken;

(3) The concentration of respirable dust, expressed as an equivalent concentration in milligrams per cubic meter of air, for each valid sample;

(4) The average concentration of respirable dust, expressed as an equivalent concentration in milligrams per cubic meter of air, for all valid samples;

(5) The occupation code, where applicable;

(6) The reason for voiding any sample.

(b) Upon receipt, the operator shall post this data for at least 31 days on the mine bulletin board.

(c) If using a CPDM, the designated mine official shall validate, certify and post on the mine bulletin board:

(1) Within 1 hour after the end of the sampling shift, the daily end-of-shift sampling results for each monitored occupation and DA, if applicable. The daily posting shall include:

(i) The mine identification number;

(ii) The locations within the mine from which the samples were taken;

(iii) The concentration of respirable dust, expressed as an equivalent concentration in milligrams per cubic meter of air, for each valid sample;

(iv) The total amount of exposure accumulated by the sampled occupation during the shift;

(v) The occupation code, where applicable;

(vi) The reason for voiding any sample;

(vii) The shift length; and

(viii) Any other information required by the District Manager.

(2) Within 2 hours after the end of the last sampling shift of the work week (Sunday through Saturday), the weekly accumulated exposure (WAE) and the weekly permissible accumulated exposure (WPAE) for each occupation sampled in an MMU. If the mine employs multiple crews at an MMU to work the same shift but on different days during the same calendar week, the operator shall post the WAE and WPAE for each crew that was assigned to the occupation being monitored.

(3) This information shall be posted for at least 15 calendar days.

§ 70.212 Status change reports.

(a) If there is a change in operational status that affects the respirable dust sampling requirements of this part, the operator shall report the change in operational status of the mine, mechanized mining unit, or designated area to the MSHA District Office or to any other MSHA office designated by the District Manager. Status changes shall be reported in writing or electronically within 3 working days after the status change has occurred.

(b) Each specific operational status is defined as follows:

(1) Underground mine:

(i) *Producing*—has at least one MMU unit producing material.

(ii) *Nonproducing*—no material is being produced.

(iii) *Abandoned*—the work of all miners has been terminated and production activity has ceased.

(2) MMU:

(i) *Producing*—producing material from a working section.

(ii) *Nonproducing*—temporarily ceased production of material.

(iii) *Abandoned*—permanently ceased production of material.

(3) DA:

(i) *Producing*—activity is occurring.

(ii) *Nonproducing*—activity has ceased.

(iii) *Abandoned*—the dust generating source has been withdrawn and activity has ceased.

(c) Status changes affecting the operational readiness of any CPDM shall be reported by the designated mine official to the MSHA District Office or to any other MSHA office designated by the District Manager within 24 hours after the status change has occurred. Status changes shall be reported in writing or electronically.

§§ 70.300 and 70.305 [Redesignated as §§ 72.700 and 72.701]

6. Sections 70.300 and 70.305 are redesignated as §§ 72.700 and 72.701 respectively.

Subpart D—[Reserved]

7. Subpart D heading removed and subpart reserved.

PART 71—MANDATORY HEALTH STANDARDS FOR SURFACE COAL MINES AND SURFACE WORK AREAS OF UNDERGROUND COAL MINES

8. The authority citation for part 71 is revised to read as follows:

Authority: 30 U.S.C. 811, 813(h), and 957.

9. Section 71.1 is revised to read as follows:

§ 71.1 Scope.

This part 71 sets forth mandatory health standards for each surface coal mine and for the surface work areas of each underground coal mine subject to the Federal Mine Safety and Health Act of 1977, as amended.

9. Section 71.2 is amended by:

a. Removing the alphabetical paragraph designations and arranging existing definitions in alphabetical order;

b. Adding definitions for "Approved sampling device," "Coal mine dust personal sampler unit *(CMDPSU),*" "Continuous personal dust monitor *(CPDM),*" "Equivalent concentration," and "Representative samples;"

c. Revising definitions for "Act," "Designated work position (DWP)," "Quartz," and "Work position."

The additions and revisions are revised to read as follows:

§ 71.2 Definitions.

Act. The Federal Mine Safety and Health Act of 1977, Public Law 91–173, as amended by Public Law 95–164 and Public Law 109–236.

* * * * *

Approved sampling device. A sampling device approved by the Secretary and Secretary of Health and Human Services (HHS) under part 74 of this title.

* * * * *

Coal mine dust personal sampler unit (CMDPSU). A personal sampling device approved under part 74, subpart B, of this title.

* * * * *

Continuous personal dust monitor (CPDM). A personal sampling device approved under part 74, subpart C, of this title.

Designated work position (DWP). A work position at a surface area of a coal mine required to be sampled by this part. The DWP designation consists of a four-digit surface area number assigned by MSHA identifying the specific physical portion of a surface coal mine or surface area of an underground mine that is affected, and a three-digit MSHA coal mining occupation code describing the location to which a miner is assigned in the performance of his or her regular duties.

* * * * *

Equivalent concentration. The concentration of respirable coal mine dust expressed in milligrams per cubic meter of air (mg/m^3), determined by dividing the weight of dust in milligrams collected on the filter of an approved sampling device by the volume of air in cubic meters passing through the collection filter (sampling time in minutes times the sampling airflow rate in cubic meters per minute), and then converting this concentration to an equivalent 8-hour exposure as measured by the Mining Research Establishment (MRE) instrument. When the approved sampling device is:

(1) The CMDPSU, the equivalent concentration is determined by first multiplying the concentration of respirable coal mine dust by the MRE conversion factor prescribed by the Secretary and then normalizing this quantity to an 8-hour exposure measurement by multiplying the MRE-equivalent concentration by the factor $t/480$, where t is the sampling time in minutes if longer than 8 hours.

(2) The CPDM, the device shall be programmed to directly report the end-of-shift equivalent concentration as an MRE 8-hour equivalent concentration.

(3) Either the CMDPSU or CPDM and the sampled work shift is less than 8 hours, the value of t used for normalizing the MRE-equivalent concentration to an 8-hour exposure measurement shall be 480 minutes.

* * * * *

Quartz. Crystalline silicon dioxide (SiO_2) as measured by:

(1) MSHA Analytical Method P–7: Infrared Determination of Quartz in Respirable Coal Mine Dust; or

(2) Any method approved by MSHA as providing a measurement of quartz equivalent to that obtained by MSHA Analytical Method P–7.

Representative samples. Respirable dust samples that reflect typical dust concentration levels in the working environment of the DWP when performing normal duties.

* * * * *

Work position. An occupation identified by an MSHA three-digit code number describing a location to which a miner is assigned in the performance of his or her normal duties.

10. Subpart B is revised to read as follows:

Subpart B—Dust Standards

Sec.

71.100 Respirable dust standard.

71.101 Respirable dust standard when quartz is present.

§ 71.100 Respirable dust standard.

Each operator shall continuously maintain the average concentration of respirable dust in the mine atmosphere during each shift to which each miner in the active workings of each mine is exposed, as measured with an approved sampling device and in terms of an equivalent concentration, at or below:

(a) 2.0 milligrams of respirable dust per cubic meter of air (mg/m^3).

(b) 1.7 mg/m^3 as of [date 6 months after the effective date of the final rule].

(c) 1.5 mg/m^3 as of [date 12 months after the effective date of the final rule].

(d) 1.0 mg/m^3 as of [date 24 months after the effective date of the final rule].

§ 71.101 Respirable dust standard when quartz is present.

(a) Each operator shall continuously maintain the average concentration of respirable quartz dust in the mine atmosphere during each shift to which each miner in the active workings of each mine is exposed at or below 0.1 mg/m^3 (100 micrograms per cubic meter or µg/m^3) as measured with an approved sampling device and in terms of an equivalent concentration.

(b) When the concentration of respirable quartz dust exceeds 100 µg/m^3, the operator shall continuously maintain the average concentration of respirable dust in the mine atmosphere during each shift to which each miner in the active workings is exposed as measured with an approved sampling device and in terms of an equivalent concentration at or below the applicable standard. The applicable standard is computed by dividing the percent of quartz into the number 10. The application of this formula shall not result in the applicable standard that exceeds the standard established by § 71.100(a) of this section.

Example: Assume the sampled DWP is on a 2.0-mg/m^3 dust standard. Suppose a valid representative dust sample with an equivalent concentration of 1.0 mg/m^{3}contains 16.7% of quartz dust, which corresponds to a quartz concentration of 167 µg/m^3. Therefore, the average concentration of respirable dust in the mine atmosphere associated with that DWP shall be maintained on each shift at or below 0.6 mg/m^3 (10/16.7% = 0.6 mg/m^3).

11. Subpart C is revised to read as follows:

Subpart C—Sampling Procedures

Sec.

71.201 Sampling; general and technical requirements.

71.202 Certified person; sampling.

71.203 Certified person; maintenance and calibration.

71.204 Approved sampling devices; maintenance and calibration.

71.205 Approved sampling devices; operation; air flowrate.

71.206 CPDM Performance Plan.

71.207 Sampling of designated work positions.

71.208 Respirable dust samples; transmission by operator.

71.209 Respirable dust samples; report to operator; posting.

71.210 Status change reports.

§ 71.201 Sampling; general and technical requirements.

(a) Each operator shall take representative samples of the concentration of respirable dust in the active workings of the mine as required by this part with an approved sampling device.

(b) Sampling devices shall be worn or carried directly to and from the DWP to be sampled. Sampling devices shall remain with the DWP and shall be operational during the entire shift, which includes the total time spent in the DWP and while travelling to and from the DWP being sampled. If the work shift to be sampled is longer than 12 hours and the sampling device is:

(1) A CMDPSU, the operator shall switch-out the unit's sampling pump prior to the 13th-hour of operation.

(2) A CPDM, the operator shall switch-out the CPDM with a fully charged device prior to the 13th-hour of operation.

(c) If using a CMDPSU, one control filter shall be used for each shift of sampling. Each control filter shall:

(1) Have the same pre-weight date (noted on the dust data card) as the ones used for sampling;

(2) Remain plugged at all times;

(3) Be exposed to the same time, temperature, and handling conditions as the ones used for sampling; and

(4) Be kept with the exposed samples after sampling.

(d) Records showing the length of each normal work shift for each DWP shall be made and retained at least six months and shall be made available for inspection by authorized representatives of the Secretary and the representative of miners or submitted to the District Manager when requested in writing.

(e) Upon request from the District Manager, the operator shall submit the date and time any respirable dust sampling required by this part will begin. This information shall be submitted at least 48 hours prior to scheduled sampling.

(f) Upon written request by the operator, the District Manager may waive the rain restriction for a normal work shift as defined in § 71.2 for a period not to exceed two months, if the District Manager determines that:

(1) The operator will not have reasonable opportunity to complete the respirable dust sampling required by this part without the waiver because of the frequency of rain; and

(2) The operator did not have reasonable opportunity to complete the respirable dust sampling required by this part prior to requesting the waiver.

(g) Operators using CPDMs shall provide training to all miners expected to wear the CPDM. The training shall be completed prior to a miner being required to wear the CPDM and then every 12 months thereafter. The training shall include:

(1) Explaining the basic features and capabilities of the CPDM;

(2) How to set-up the CPDM for compliance sampling;

(3) A discussion of the various types of information displayed by the CPDM and how to access that information;

(4) How to start and stop a short-term sample run during compliance sampling; and

(5) The importance of continuously monitoring dust concentrations and properly wearing the CPDM.

(h) An operator shall keep a record of the CPDM training at the mine site for two years after completion of the training. An operator may keep the record elsewhere if the record is immediately accessible from the mine site by electronic transmission. Upon request from an authorized representative of the Secretary, Secretary of HHS, or representative of miners, the operator shall promptly provide access to any such training records.

§ 71.202 Certified person; sampling.

(a) The respirable dust sampling required by this part shall be performed by a certified person.

(b) To be certified, a person shall complete the applicable MSHA course of instruction and pass the MSHA examination demonstrating competency in sampling procedures. Persons not certified in sampling, and those certified only in maintenance and calibration procedures in accordance with § 71.203(b), are not permitted to collect respirable dust samples required by this part or handle approved sampling devices when being used in sampling.

(c) To maintain certification, a person must pass the MSHA examination demonstrating competency in sampling procedures every three years.

(d) MSHA may revoke a person's certification for failing to pass the MSHA examination or to properly carry out the required sampling procedures.

§ 71.203 Certified person; maintenance and calibration.

(a) Approved sampling devices shall be maintained and calibrated by a certified person.

(b) To be certified, a person shall complete the applicable MSHA course of instruction and pass the MSHA examination demonstrating competency in maintenance and calibration procedures for approved sampling devices. If using a CMDPSU, necessary maintenance of the sampling head assembly can be performed by persons certified in sampling or maintenance and calibration.

(c) To maintain certification, a person must pass the MSHA examination demonstrating competency in maintenance and calibration procedures every three years.

(d) MSHA may revoke a person's certification for failing to pass the MSHA examination or to properly carry out the required maintenance and calibration procedures.

§ 71.204 Approved sampling devices; maintenance and calibration.

(a) Approved sampling devices shall be maintained as approved under part 74 of this chapter and calibrated in accordance with MSHA Informational Report IR 1240 (1996) "Calibration and Maintenance Procedures for Coal Mine Respirable Dust Samplers" or in accordance with the manufacturer's recommendations if using a CPDM. Only persons certified in maintenance and calibration can perform maintenance work on the pump unit of approved sampling devices.

(b) Approved sampling devices shall be calibrated at the flowrate of 2.0 liters of air per minute (L/min), or at a different flowrate recommended by the manufacturer or prescribed by the Secretary or Secretary of HHS for the particular device, before they are put into service and, thereafter, at time intervals recommended by the manufacturer or prescribed by the Secretary or Secretary of HHS.

(c) If using a CMDPSU, sampling devices shall be examined and tested by a person certified in sampling or in maintenance and calibration within 3 hours before the start of the shift on which the approved sampling devices will be used to collect respirable dust samples. This is to assure that the sampling devices are clean and in proper working condition. This examination and testing shall include the following:

(1) Examination of all components of the cyclone assembly to assure that they are clean and free of dust and dirt. This includes examining the interior of the connector barrel (located between the cassette assembly and vortex finder), vortex finder, cyclone body and grit pot;

(2) Examination of the inner surface of the cyclone body to assure that it is free of scoring or scratch marks on the inner surface of the cyclone where the air flow is directed by the vortex finder into the cyclone body;

(3) Examination of the external hose connecting the pump unit to the

sampling head assembly to assure that it is clean and free of leaks; and

(4) Examination of the clamping and positioning of the cyclone body, vortex finder and cassette to assure that they are rigid, in alignment, firmly in contact and airtight.

(5) Testing the voltage of each battery while under actual load to assure the battery is fully charged. This requires that a fully assembled and examined sampling head assembly be attached to the pump inlet with the pump unit running when the voltage check is made. The voltage for nickel cadmium cell batteries shall not be lower than the product of the number of cells in the battery multiplied by 1.25. The voltage for other than nickel cadmium cell batteries shall not be lower than the product of the number of cells in the battery multiplied by the manufacturer's nominal voltage per cell value.

(d) If using a CPDM, the certified person in sampling or in maintenance and calibration shall follow the examination, testing and set-up procedures contained in the approved CPDM Performance Plan.

(e) MSHA Informational Report IR 1240 (1996) referenced in paragraph (a) of this section is incorporated-by-reference. This incorporation-by-reference was approved by the Director of the Federal Register in accordance with 5 U.S.C. 552(a) and 1 CFR part 51. Copies may be inspected or obtained at MSHA, Coal Mine Safety and Health, 1100 Wilson Blvd., Room 2424, Arlington, Virginia 22209–3939 and at each MSHA Coal Mine Safety and Health district office. Copies may be inspected at the National Archives and Records Administration (NARA). For information on the availability of this material at NARA, call 202–741–6030, or go to: *http://www.archives.gov/federal_register/code_of_federal_regulations/ibr_locations.html.*

§ 71.205 Approved sampling devices; operation; air flowrate.

(a) Approved sampling devices shall be operated at the flowrate of 2.0 L/min, or at a different flowrate recommended by the manufacturer or prescribed by the Secretary or Secretary of HHS.

(b) If using a CMDPSU, each sampling device shall be examined each shift by a person certified in sampling during:

(1) The second hour after being put into operation to assure it is in the proper location, operating properly and at the proper flowrate. If the proper flowrate is not maintained, necessary adjustments shall be made by the certified person.

(2) The last hour of operation to assure that it is operating properly and at the proper flowrate. If the proper flowrate is not maintained, the respirable dust sample shall be transmitted to MSHA with a notation by the certified person on the back-side of the dust data card stating that the proper flowrate was not maintained. Other events occurring during the collection of respirable dust samples that may affect the validity of the sample, such as dropping of the sampling head assembly onto the mine floor, shall be noted on the back-side of the dust data card.

(c) If using a CPDM, the certified person shall examine the sampling device during the shift in accordance with the procedures contained in the approved CPDM Performance Plan.

§ 71.206 CPDM Performance Plan.

(a) If using a CPDM, the operator shall have an approved CPDM Performance Plan to ensure that the regular duties of the DWP shall not expose miners to concentrations of respirable coal mine dust in excess of the applicable standard. The operator shall develop a proposed CPDM Performance Plan and submit it to the District Manager. The proposed CPDM Performance Plan shall not be implemented until approved by the District Manager.

(1) The mine operator shall notify the representative of miners at least 5 days prior to submission of a proposed CPDM Performance Plan and any proposed revision to a CPDM Performance Plan. If requested, the mine operator shall provide a copy to the representative of miners at the time of notification;

(2) A copy of the proposed CPDM Performance Plan, and a copy of any proposed revision, submitted for approval shall be made available for inspection by the representative of miners; and

(3) A copy of the proposed CPDM Performance Plan and a copy of any proposed revision submitted for approval shall be posted on the mine bulletin board at the time of submittal. The proposed plan or proposed revision shall remain posted until it is approved, withdrawn, or denied.

(4) Following receipt of the proposed plan or proposed revision, the representative of miners may submit timely comments to the District Manager, in writing, for consideration during the review process. A copy of these comments shall also be provided to the operator by the District Manager upon request.

(b) The approved CPDM Performance Plan shall include the names or titles of the responsible mine officials designated by the operator and the following information:

(1) The DWPs that will be sampled using a CPDM. Each DWP shall be assigned a 9-digit identification number as follows:

(i) The first four digits identify the surface work area of the mine;

(ii) The next three digits identify the sampled work position or occupation;

(iii) The eighth digit identifies the particular shift being sampled (*e.g.,* 1st, 2nd or 3rd); and

(iv) The final digit identifies the particular miner assigned to that DWP if the mine employs other miners that perform similar duties in the rest of the mine.

(2) The pre-operational examinations, testing and set-up procedures to verify the operational readiness of the sampling device before each sampling shift;

(3) Procedures that address downloading of end-of-shift sampling information, and validation, certification and posting of reported results;

(4) Procedures for weekly transmittals of certified sampling data files electronically to MSHA;

(5) The routine daily and other required scheduled maintenance procedures;

(6) Procedures or methods for verifying the calibration of each CPDM; and

(7) The frequency with which dust concentrations being reported by the CPDM shall be monitored by the designated mine official during the shift;

(8) The types of actions permitted to be taken during the shift to ensure the environment of the occupation being sampled remains in compliance at the end of the shift.

(9) Any other information required by the District Manager.

(c) The approved CPDM Performance Plan and any revisions shall be:

(1) Provided upon request to the representative of miners by the operator following notification of approval;

(2) Made available for inspection by the representative of miners; and

(3) Posted on the mine bulletin board within 1 working day following notification of approval, and shall remain posted for the period that the plan is in effect.

(d) The District Manager may require an approved CPDM Performance Plan to be revised if the District Manager determines that the plan is inadequate to protect miners from exposure to concentrations of respirable dust in excess of the applicable standard.

§ 71.207 Sampling of designated work positions.

(a) Each operator shall take one valid representative sample from each DWP every calendar quarter. The quarterly periods are:

January 1–March 31
April 1–June 30
July 1–September 30
October 1–December 31

(b) Designated work position samples shall be collected at locations to measure respirable dust generation sources in the active workings. The work positions at each mine where DWP samples shall be collected include:

(1) Each highwall drill operator (MSHA occupation code 384);

(2) Bulldozer operators (MSHA occupation code 368); and

(3) Other work positions designated by the District Manager for sampling in accordance with § 71.207(f).

(c) Operators with multiple work positions specified in paragraph (b)(2) and (b)(3) of this section shall sample the DWP exposed to the greatest respirable dust concentration in each work position performing the same activity or task at the same location at the mine and exposed to the same dust generation source. Each operator shall provide the District Manager with a list identifying the specific work positions where DWP samples will be collected for:

(1) Active mines—by [date 60 days after date of publication of final rule];

(2) New mines—Within 30 calendar days of mine opening; or

(3) Change in operational status that increases or reduces the number of active DWPs—within 7 calendar days of the change in status.

(d) Each DWP sample shall be taken on a normal work shift. If a normal work shift is not achieved, the respirable dust sample shall be transmitted to MSHA with a notation by the certified person on the back-side of the dust data card stating that the sample was not taken on a normal work shift. When a normal work shift is not achieved, the sample for that shift may be voided by MSHA. However, any sample, regardless of whether a normal work shift was achieved, that exceeds the applicable standard by at least 0.1 mg/m^3 shall be used to determine compliance with this part.

(e) Unless otherwise directed by the District Manager, DWP samples shall be taken by placing the sampling device as follows:

(1) *Equipment operator:* On the equipment operator or on the equipment within 36 inches of the operator's normal working position;

(2) *Non-equipment operators:* On the miner assigned to the DWP or at a location that represents the maximum concentration of dust to which the miner is exposed.

(f) The District Manager may designate for sampling under this section additional work positions at a surface coal mine and at a surface work area of an underground coal mine where a concentration of respirable dust exceeding 50 percent of the applicable standard has been measured by one or more MSHA samples. Where the applicable standard established in accordance with § 71.101 is below the respirable dust standard under § 71.100, the District Manager may designate for sampling additional work positions where a concentration of respirable dust exceeding the applicable standard has been measured by one or more MSHA samples.

(g) The District Manager may withdraw from sampling any DWP designated for sampling under paragraph (f) of this section upon finding that the operator is able to maintain continuing compliance with the applicable standard. This finding shall be based on the results of MSHA and operator samples taken during at least a one-year period.

(h) When the respirable dust standard is changed in accordance with § 71.101, the new applicable standard shall become effective on the first normal work shift following receipt of the notification of such change from MSHA.

(1) If all samples from the most recent quarterly sampling period do not exceed the new applicable standard, respirable dust sampling of the DWP shall begin on the first normal work shift during the next quarterly period following receipt of such change from MSHA.

(2) If any sample from the most recent quarterly sampling period exceeds the new applicable standard, the operator shall make necessary adjustments to the dust control parameters within three days and then collect a sample from the affected DWP on a normal work shift. The sample collected will be treated as a normal quarterly sample under this part.

(i) If using a CMDPSU, no valid single-shift concentration shall meet or exceed the excessive concentration value (ECV) that corresponds to the applicable standard in Table 71–1; or, if using a CPDM, no valid end-of-shift equivalent concentration shall meet or exceed the applicable ECV in Table 71–2.

TABLE 71–1—EXCESSIVE CONCENTRATION VALUES (ECV) BASED ON SINGLE-SHIFT CMDPSU EQUIVALENT CONCENTRATION MEASUREMENTS

Applicable standard (mg/m^3)	ECV (mg/m^3)
2.0	2.33
1.9	2.22
1.8	2.12
1.7	2.01
1.6	1.90
1.5	1.79
1.4	1.69
1.3	1.59
1.2	1.47
1.1	1.37
1.0	1.26
0.9	1.16
0.8	1.05
0.7	0.95
0.6	0.85
0.5	0.74
0.4	0.65
0.3	0.54
0.2	0.44

TABLE 71–2—EXCESSIVE CONCENTRATION VALUES (ECV) BASED ON SINGLE-SHIFT CPDM EQUIVALENT CONCENTRATION MEASUREMENTS

Applicable standard (mg/m^3)	ECV (mg/m^3)
2.0	2.26
1.9	2.15
1.8	2.04
1.7	1.92
1.6	1.81
1.5	1.70
1.4	1.59
1.3	1.47
1.2	1.36
1.1	1.25
1.0	1.13
0.9	1.02
0.8	0.91
0.7	0.80
0.6	0.68
0.5	0.57
0.4	0.46
0.3	0.34
0.2	0.23

(j) Upon issuance of a citation for a violation of the applicable standard, paragraphs (a) and (h)(2) of this section shall not apply to that DWP until the violation is abated in accordance with paragraph (k) of this section.

(k) During the time for abatement fixed in a citation for violation of the applicable standard, the operator shall take the following actions:

(1) Make approved respiratory equipment available to affected miners in accordance with § 72.700 of this chapter;

(2) Submit to the District Manager for approval proposed corrective actions to

lower the concentration of respirable dust to within the applicable standard; and

(3) Upon approval by the District Manager, implement the proposed corrective actions and then sample the affected DWP on each normal work shift until five valid representative samples are taken.

(4) If using a CPDM to meet the requirements of paragraph (a) of this section, review the adequacy of the approved CPDM Performance Plan. The operator shall submit any plan revisions to the District Manager for approval within 7 calendar days following posting of the end-of-shift equivalent concentration on the mine bulletin board.

(l) A citation for violation of the applicable standard shall be terminated by MSHA when the equivalent concentration of each of the five valid operator abatement samples is at or below the applicable standard and, within 15 calendar days after receipt of sampling results from MSHA, the operator has submitted to the District Manager for approval a proposed dust control plan applicable to the DWP in the citation or notice or proposed changes to the approved dust control plan as prescribed in § 71.300. The proposed plan parameters or proposed changes shall reflect the control measures used to abate the violation.

(m) Upon notification from MSHA that any valid representative sample taken with a CMDPSU from a DWP to meet the requirements of paragraph (a) of this section exceeds the applicable standard but is below the applicable ECV in Table 71–1, the operator shall, within 15 calendar days of notification, sample that DWP each normal work shift until five valid representative samples are taken. The operator shall begin sampling on the first normal work shift following receipt of notification. These samples will be evaluated to determine compliance with the applicable standard for this sampling period.

(n) If using a CPDM to meet the requirements in paragraph (a) of this section and a valid end-of-shift equivalent concentration exceeds the applicable standard but is less than the applicable ECV in Table 71–2, the operator shall:

(1) On the first normal work shift after determining that the applicable standard was exceeded, sample that DWP each normal work shift until five valid representative samples are taken. These samples will be evaluated to determine compliance with the applicable standard for this sampling period; and

(2) Review the adequacy of the approved CPDM Performance Plan. The operator shall submit any plan revisions to the District Manager for approval within 7 calendar days following posting of the end-of-shift equivalent concentration on the mine bulletin board.

§ 71.208 Respirable dust samples; transmission by operator.

(a) If using a CMDPSU, the operator shall transmit within 24 hours after the end of the sampling shift all samples collected to fulfill the requirements of this part in containers provided by the manufacturer of the filter cassette to: Respirable Dust Processing Laboratory, Pittsburgh Safety and Health Technology Center, Cochrans Mill Road, Building 38, P.O. Box 18179, Pittsburgh, Pennsylvania 15236–0179, or to any other address designated by the District Manager.

(b) The operator shall not open or tamper with the seal of any filter cassette or alter the weight of any filter cassette before or after it is used to fulfill the requirements of this part.

(c) A person certified in sampling shall properly complete the dust data card that is provided by the manufacturer for each filter cassette. The card shall have an identification number identical to that on the cassette used to take the sample and be submitted to MSHA with the sample. Each card shall be signed by the certified person who actually performed the required two examinations during the sampling shift and shall include that person's MSHA Individual Identification Number (MIIN). Respirable dust samples with data cards not properly completed shall be voided by MSHA.

(d) All respirable dust samples collected by the operator shall be considered taken to fulfill the sampling requirements of part 70, 71 or 90 of this title, unless the sample has been identified in writing by the operator to the District Manager, prior to the intended sampling shift, as a sample to be used for purposes other than required by part 70, 71 or 90 of this title.

(e) Respirable dust samples received by MSHA in excess of those required by this part shall be considered invalid samples.

(f) If using a CPDM, the designated mine official shall validate, certify and transmit electronically to MSHA within 12 hours after the end of the last sampling shift for a DWP all sample and error data file information collected during the previous shifts and stored in the CPDM. All CPDM data files transmitted to MSHA shall be maintained by the operator for at least 12 months.

§ 71.209 Respirable dust samples; report to operator; posting.

(a) MSHA shall provide the operator a report with the following data on respirable dust samples submitted in accordance with this part:

(1) The mine identification number;

(2) The DWP at the mine from which the samples were taken;

(3) The concentration of respirable dust, expressed as an equivalent concentration in milligrams per cubic meter of air, for each valid sample; and

(4) The reason for voiding any sample.

(b) Upon receipt, the operator shall post this data for at least 46 days on the mine bulletin board.

(c) If using a CPDM, the designated mine official shall validate, certify and post on the mine bulletin board:

(1) Within 1 hour after the end of the sampling shift, the daily end-of-shift sampling results for each DWP. The daily posting shall include:

(i) The mine identification number;

(ii) The DWP at the mine from which the samples were taken;

(iii) The concentration of respirable dust, expressed as an equivalent concentration in milligrams per cubic meter of air, for each valid sample;

(iv) The reason for voiding any sample;

(v) The shift length; and

(vi) Any other information required by the District Manager.

(2) This information shall be posted at least 46 calendar days.

§ 71.210 Status change reports.

(a) If there is a change in operational status that affects the respirable dust sampling requirements of this part, the operator shall report the change in operational status of the mine or DWP to the MSHA District Office or to any other MSHA office designated by the District Manager. Status changes shall be reported in writing or electronically within 3 working days after the status change has occurred.

(b) Each specific operational status is defined as follows:

(1) Underground mine:

(i) Producing—has at least one mechanized mining unit producing material.

(ii) Nonproducing—no material is being produced.

(iii) Abandoned—the work of all miners has been terminated and production activity has ceased.

(2) Surface mine:

(i) Producing—normal activity is occurring and coal is being produced or processed or other material or equipment is being handled or moved.

(ii) Nonproducing—normal activity is not occurring and coal is not being produced or processed, and other material or equipment is not being handled or moved.

(iii) Abandoned—the work of all miners has been terminated and all activity has ceased.

(3) DWP:

(i) Producing—normal activity is occurring.

(ii) Nonproducing—normal activity is not occurring.

(iii) Abandoned—the dust generating source has been withdrawn and activity has ceased.

(c) Status changes affecting the operational readiness of any CPDM shall be reported by the designated mine official to the MSHA District Office or to any other MSHA office designated by the District Manager within 24 hours after the status change has occurred. Status changes shall be reported in writing or electronically.

12. Subpart D is revised to read as follows:

Subpart D–Respirable Dust Control Plans

Sec.
71.300 Respirable dust control plan; filing requirements.
71.301 Respirable dust control plan; approval by District Manager and posting.

§ 71.300 Respirable dust control plan; filing requirements.

(a) As required by § 71.207(l), the operator shall submit to the District Manager for approval a written respirable dust control plan applicable to the DWP identified in the citation. The respirable dust control plan and revisions thereof shall be suitable to the conditions and the mining system of the coal mine and shall be adequate to continuously maintain respirable dust within the applicable standard at the DWP.

(1) The mine operator shall notify the representative of miners at least 5 days prior to submission of a respirable dust control plan and any revision to a dust control plan. If requested, the mine operator shall provide a copy to the representative of miners at the time of notification;

(2) A copy of the proposed respirable dust control plan, and a copy of any proposed revision, submitted for approval shall be made available for inspection by the representative of miners; and

(3) A copy of the proposed respirable dust control plan, and a copy of any proposed revision, submitted for approval shall be posted on the mine bulletin board at the time of submittal. The proposed plan or proposed revision shall remain posted until it is approved, withdrawn, or denied.

(4) Following receipt of the proposed plan or proposed revision, the representative of miners may submit timely comments to the District Manager, in writing, for consideration during the review process. Upon request, a copy of these comments shall be provided to the operator by the District Manager.

(b) Each respirable dust control plan shall include at least the following:

(1) The mine identification number and DWP number assigned by MSHA, the operator's name, mine name, mine address, and mine telephone number and the name, address, and telephone number of the principal officer in charge of health and safety at the mine;

(2) The specific DWP at the mine to which the plan applies;

(3) A detailed description of the specific respirable dust control measures used to abate the violation of the respirable dust standard; and

(4) A detailed description of how each of the respirable dust control measures described in response to paragraph (b)(3) of this section will continue to be used by the operator, including at least the specific time, place and manner the control measures will be used.

§ 71.301 Respirable dust control plan; approval by District Manager and posting.

(a) The District Manager will approve respirable dust control plans on a mine-by-mine basis. When approving respirable dust control plans, the District Manager shall consider whether:

(1) The respirable dust control measures would be likely to maintain concentrations of respirable coal mine dust at or below the applicable standard; and

(2) The operator's compliance with all provisions of the respirable dust control plan could be objectively ascertained by MSHA.

(b) MSHA may take respirable dust samples to determine whether the respirable dust control measures in the operator's plan effectively maintain concentrations of respirable coal mine dust at or below the applicable standard.

(c) The operator shall comply with all provisions of each respirable dust control plan upon notice from MSHA that the respirable dust control plan is approved.

(d) The approved respirable dust control plan and any revisions shall be:

(1) Provided upon request to the representative of miners by the operator following notification of approval;

(2) Made available for inspection by the representative of miners; and

(3) Posted on the mine bulletin board within 1 working day following notification of approval, and shall remain posted for the period that the plan is in effect.

(e) The operator may review respirable dust control plans and submit proposed revisions to such plans to the District Manager for approval.

PART 72—[AMENDED]

13. The authority citation for part 72 is revised to read as follows:

Authority: 30 U.S.C. 811, 813(h), and 957.

14. Subpart B is added to part 72 to read as follows:

Subpart B–Medical Surveillance

§ 72.100 Periodic examinations.

(a) Each operator of a coal mine shall provide to each miner periodic examinations including chest x-rays, spirometry, symptom assessment, and occupational history at a frequency specified in this section and at no cost to the miner.

(1) Each operator shall use facilities approved by the National Institute for Occupational Safety and Health (NIOSH) to provide examinations specified in paragraph (a) of this section.

(b) *Voluntary examinations.* Each operator shall provide the opportunity to have the examinations specified in § 72.100(a) at least every 5 years to all miners employed at a coal mine. The examinations shall be available during a 6-month period that begins no less than 3.5 years and not more than 4.5 years from the end of the last 6-month period.

(c) *Mandatory examinations.* For each miner who begins work at a coal mine for the first time, the operator shall provide examinations specified in § 72.100(a) as follows:

(1) An initial examination no later than 30 days after beginning employment;

(2) A follow-up examination no later than 3 years after the initial examination in paragraph (c)(1) of this section; and

(3) A follow-up examination no later than 2 years after the examinations in paragraph (c)(2) of this section if the chest x-ray shows evidence of pneumoconiosis or the spirometry examination indicates evidence of decreased lung function. For this purpose, evidential criteria will be defined by NIOSH.

(d) Each mine operator shall develop and submit for approval to NIOSH a plan for providing miners with the examinations specified in § 72.100(a)

and a roster specifying the name and current address of each miner covered by the plan.

(e) Each mine operator shall post on the mine bulletin board at all times the approved plan for providing the examinations specified in § 72.100(a).

15. Add § 72.700 to subpart E of part 72 to read as follows:

§ 72.700 Respiratory equipment; respirable dust.

(a) Respiratory equipment approved by NIOSH under 42 CFR part 84 shall be made available to all persons as required under parts 70, 71, and 90 of this chapter. Use of respirators shall not be substituted for environmental control measures in the active workings. Each operator shall maintain an adequate supply of respiratory equipment.

(b) When required to make respirators available, the operator shall provide training prior to the miner's next scheduled work shift, unless the miner received training within the previous 12 months on the types of respirators made available. The training shall include: the care, fit, use, and limitations of each type of respirator.

(c) An operator shall keep a record of the training at the mine site for two years after completion of the training. An operator may keep the record elsewhere if the record is immediately accessible from the mine site by electronic transmission. Upon request from an authorized representative of the Secretary, Secretary of HHS, or representative of miners, the operator shall promptly provide access to any such training records.

16. Add § 72.701 to subpart E of part 72 to read as follows:

§ 72.701 Respiratory equipment; gas, dusts, fumes, or mists.

Respiratory equipment approved by NIOSH under 42 CFR part 84 shall be provided to persons exposed for short periods to inhalation hazards from gas, dusts, fumes, or mists. When the exposure is for prolonged periods, other measures to protect such persons or to reduce the hazard shall be taken.

17. Add § 72.800 to subpart E of part 72 to read as follows:

§ 72.800 Single, full-shift measurement of respirable coal mine dust.

The Secretary may use a single, full-shift measurement of respirable coal mine dust to determine average concentration on a shift if that measurement accurately represents atmospheric conditions to which a miner is exposed during such shift.

PART 75—MANDATORY SAFETY STANDARDS—UNDERGROUND COAL MINES

18. The authority citation for part 75 is revised to read as follows:

Authority: 30 U.S.C. 811, 813(h), and 957.

19. Amend § 75.325 by revising paragraph (a)(2) to read as follows:

§ 75.325 Air quantity.

(a) * * *

(2) The quantity of air reaching the working face shall be determined at or near the face end of the line curtain, ventilation tubing, or other ventilation control device. If the curtain, tubing, or device extends beyond the last row of permanent roof supports, the quantity of air reaching the working face shall be determined behind the line curtain or in the ventilation tubing at or near the last row of permanent supports. When machine mounted dust collectors are used in conjunction with blowing face ventilation systems, the quantity of air reaching the working face shall be determined with the dust collector turned off.

* * * * *

20. Amend § 75.332 by revising paragraph (a)(1) to read as follows:

§ 75.332 Working sections and working places.

(a)(1) Each MMU on each working section and each area where mechanized mining equipment is being installed or removed, shall be ventilated by a separate split of intake air directed by overcasts, undercasts or other permanent ventilation controls.

* * * * *

21. Amend § 75.350 by revising paragraph (b)(3)(i) and (ii) to read as follows:

§ 75.350 Belt air course ventilation.

* * * * *

(b) * * *

(3)(i) The average concentration of respirable dust in the belt air course, when used as a section intake air course, shall be maintained at or below:

(A) 1.0 mg/m^3

(B) 0.5 mg/m^3 as of [date 6 months after the effective date of the final rule].

(ii) Where miners on the working section are on a reduced standard below that specified in § 75.350(b)(3)(i), the average concentration of respirable dust in the belt entry must be at or below the lowest applicable standard on that section.

* * * * *

22. Amend § 75.362 by revising paragraphs (a)(2) and (g)(2) and adding paragraphs (g)(3) and (g)(4) to read as follows:

§ 75.362 On-shift examinations.

(a) * * *

(2) A person designated by the operator shall conduct an examination and record the results and the corrective actions taken to assure compliance with the respirable dust control parameters specified in the approved mine ventilation plan. In those instances when a shift change is accomplished without an interruption in production on a section, the examination shall be made anytime within 1 hour of the shift change. In those instances when there is an interruption in production during the shift change, the examination shall be made before production begins on a section. Deficiencies in dust controls shall be corrected before production begins or resumes. The examination shall include: air quantities and velocities; water pressures and flow rates; excessive leakage in the water delivery system; water spray numbers and orientations; section ventilation and control device placement and any other dust suppression measures; specific measurements like roof bolter dust collector vacuum levels and scrubber air flow rate; and work practices required by the ventilation plan. Measurements of the air velocity and quantity, water pressure and flow rates are not required if continuous monitoring of these controls is used and indicates that the dust controls are functioning properly.

* * * * *

(g)(2) The certified person directing the on-shift examination to assure compliance with the respirable dust control parameters specified in the approved mine ventilation plan shall:

(i) Certify by initials, date, and time on a board maintained at the section load-out or similar location showing that the examination was made prior to resuming production; and

(ii) Verify, by initials and date, the record of the results of the examination required under paragraph (a)(2) of this section to assure compliance with the respirable dust control parameters specified in the mine ventilation plan. The verification shall be made no later than the end of the shift for which the examination was made.

(3) The mine foreman or equivalent mine official shall countersign each examination record required under paragraph (a)(2) of this section after it is verified by the certified person under paragraph (g)(2)(ii) of this section, and no later than the end of the mine foreman's or equivalent mine official's next regularly scheduled working shift. The record shall be made in a secure book that is not susceptible to alteration or electronically in a computer system

so as to be secure and not susceptible to alteration.

(4) Records shall be retained at a surface location at the mine for at least 1 year and shall be made available for inspection by authorized representatives of the Secretary and the representative of miners.

23. Amend § 75.371 by revising paragraphs (f), (j) and (t) to read as follows:

§ 75.371 Mine ventilation plan; contents.

* * * * *

(f) Section and face ventilation systems used and the minimum quantity of air that will be delivered to the working section for each mechanized mining unit, including drawings illustrating how each system is used, and a description of each different dust suppression system used on equipment, identified by make and model, on each working section, including:

(1) The number, types, location, orientation, operating pressure, and flow rate of operating water sprays;

(2) The maximum distance that ventilation control devices will be installed from each working face when mining or installing roof bolts in entries and crosscuts;

(3) Procedures for maintaining the roof bolter dust collection system in approved condition; and

(4) Recommended best work practices for equipment operators to minimize dust exposure.

* * * * *

(j) The operating volume of machine mounted dust collectors or diffuser fans, if used (see § 75.325(a)(3)), including the type and size of dust collector screen used, and a description of the procedures to maintain dust collectors used on equipment.

* * * * *

(t) The locations where samples for "designated areas" will be collected, including the specific location of each sampling device, and the respirable dust control measures used at the dust generating sources for these locations (see § 70.209 of this chapter).

* * * * *

PART 90—MANDATORY HEALTH STANDARDS FOR COAL MINERS WHO HAVE EVIDENCE OF THE DEVELOPMENT OF PNEUMOCONIOSIS

24. The authority citation for part 90 is revised to read as follows:

Authority: 30 U.S.C. 811, 813(h) and 957.

25. Section 90.1 is revised to read as follows:

§ 90.1 Scope.

This part 90 establishes the option of miners who are employed at coal mines and who have evidence of the development of pneumoconiosis to work in an area of a mine where the average concentration of respirable dust in the mine atmosphere during each shift is continuously maintained at or below the applicable standard as specified in § 90.100. The rule sets forth procedures for miners to exercise this option, and establishes the right of miners to retain their regular rate of pay and receive wage increases. The rule also sets forth the operator's obligations, including respirable dust sampling for part 90 miners. This part 90 is promulgated pursuant to section 101 of the Act and supersedes section 203(b) of the Federal Mine Safety and Health Act of 1977, as amended.

26. Amend § 90.2 by:

a. Adding definitions for "Approved sampling device," "Coal mine dust personal sampler unit *(CMDPSU)*," "Continuous personal dust monitor (CPDM)," "Equivalent concentration," "Representative samples," "Weekly accumulated exposure (WAE)," and "Weekly permissible accumulated exposure (WPAE);" and

b. Revising definitions for "Act," "Mechanized mining unit (MMU)," and "Part 90 Miner."

The additions and revisions are revised to read as follows:

§ 90.2 Definitions.

Act. The Federal Mine Safety and Health Act of 1977, Public Law 91–173, as amended by Public Law 95–164 and Public Law 109–236.

* * * * *

Approved sampling device. A sampling device approved by the Secretary and Secretary for Health and Human Services (HHS) under part 74 of this title.

* * * * *

Coal mine dust personal sampler unit (CMDPSU). A personal sampling device approved under part 74, subpart B, of this title.

* * * * *

Continuous personal dust monitor (CPDM). A personal sampling device approved under part 74, subpart C, of this title.

* * * * *

Equivalent concentration. The concentration of respirable coal mine dust expressed in milligrams per cubic meter of air (mg/m^3), determined by dividing the weight of dust in milligrams collected on the filter of an approved sampling device by the volume of air in cubic meters passing through the collection filter (sampling time in minutes times the sampling airflow rate in cubic meters per minute), and then converting this concentration to an equivalent 8-hour exposure as measured by the Mining Research Establishment (MRE) instrument. When the approved sampling device is:

(1) The CMDPSU, the equivalent concentration is determined by first multiplying the concentration of respirable coal mine dust by the MRE conversion factor prescribed by the Secretary and then normalizing this quantity to an 8-hour exposure measurement by multiplying the MRE-equivalent concentration by the factor $t/480$, where t is the sampling time in minutes if longer than 8 hours.

(2) The CPDM, the device shall be programmed to directly report the end-of-shift equivalent concentration as an MRE 8-hour equivalent concentration.

(3) Either the CMDPSU or CPDM and the sampled work shift is less than 8 hours, the value of t used for normalizing the MRE-equivalent concentration to an 8-hour exposure measurement shall be 480 minutes.

Mechanized mining unit (MMU). A unit of mining equipment including hand loading equipment used for the production of material; or a specialized unit which uses mining equipment other than specified in § 70.207(b) of this chapter. Each MMU is assigned a four-digit identification number by MSHA, which is retained by the MMU. However, when:

(1) Two sets of mining equipment are used in a series of working places within the same working section and only one production crew is employed, the two sets of equipment are identified as a single MMU.

(2) Two or more sets of mining equipment are used in a series of working places within the same working section and two or more production crews are employed, each set of mining equipment shall be identified as a separate MMU.

* * * * *

Part 90 miner. A miner employed at a coal mine who has exercised the option under the old section 203(b) program, or under § 90.3 of this part to work in an area of a mine where the average concentration of respirable dust in the mine atmosphere during each shift to which that miner is exposed is continuously maintained at or below the applicable standard, and who has not waived these rights.

Quartz. Crystalline silicon dioxide (SiO_2) as measured by:

(1) MSHA Analytical Method P–7: Infrared Determination of Quartz in Respirable Coal Mine Dust; or

(2) Any method approved by MSHA as providing a measurement of quartz equivalent to that obtained by MSHA Analytical Method P–7.

Representative samples. Respirable dust samples that reflect typical dust concentration levels in the working environment of the part 90 miner when performing normal work duties.

* * * * *

Weekly accumulated exposure (WAE). The total amount of exposure to respirable coal mine dust, expressed in mg-hr/m^3, accumulated by a part 90 miner when performing normal work duties during a work week (Sunday through Saturday), determined by multiplying the daily individual end-of-shift equivalent concentration measurements by 8 hours, which yields the total amount of exposure accumulated over the course of the particular shift sampled, and then adding together all of the daily accumulated exposures.

Weekly permissible accumulated exposure (WPAE). The maximum amount of accumulated exposure to respirable coal mine dust, expressed in mg-hr/m^3, permitted to be received by a part 90 miner when performing normal work duties during a 40-hour work week (Sunday through Saturday), determined by multiplying the applicable standard by 40 hours.

27. Section 90.3 is revised to read as follows:

§ 90.3 Part 90 option; notice of eligibility; exercise of option.

(a) Any miner employed at a coal mine who, in the judgment of the Secretary of HHS, has evidence of the development of pneumoconiosis based on a chest X-ray, read and classified in the manner prescribed by the Secretary of HHS, or based on other medical examinations shall be afforded the option to work in an area of a mine where the average concentration of respirable dust in the mine atmosphere during each shift to which that miner is exposed is continuously maintained at or below the applicable standard. Each of these miners shall be notified in writing of eligibility to exercise the option.

(b) Any miner who is a section 203(b) miner on January 31, 1981, shall be a part 90 miner on February 1, 1981, entitled to full rights under this part to retention of pay rate, future actual wage increases, and future work assignment, shift and respirable dust protection.

(c) Any part 90 miner who is transferred to a position at the same or another coal mine shall remain a part 90 miner entitled to full rights under this part at the new work assignment.

(d) The option to work in a low dust area of the mine may be exercised for the first time by any miner employed at a coal mine who was eligible for the option under the old section 203(b) program, or is eligible for the option under this part by signing and dating the Exercise of Option Form and mailing the form to the Chief, Division of Health, Coal Mine Safety and Health, MSHA, 1100 Wilson Boulevard, Arlington, Virginia 22209.

(e) The option to work in a low dust area of the mine may be re-exercised by any miner employed at a coal mine who exercised the option under the old section 203(b) program, or exercised the option under this part by sending a written request to the Chief, Division of Health, Coal Mine Safety and Health, MSHA, 1100 Wilson Boulevard, Arlington, Virginia 22209. The request should include the name and address of the mine and operator where the miner is employed.

(f) No operator shall require from a miner a copy of the medical information received from the Secretary or Secretary of HHS.

28. Subpart B is revised to read as follows:

Subpart B—Dust Standards, Rights of Part 90 Miners

Sec.
90.100 Respirable dust standard.
90.101 Respirable dust standard when quartz is present.
90.102 Transfer; notice.
90.103 Compensation.
90.104 Waiver of rights; re-exercise of option.

§ 90.100 Respirable dust standard.

After the 20th calendar day following receipt of notification from MSHA that a part 90 miner is employed at the mine, the operator shall continuously maintain the average concentration of respirable dust in the mine atmosphere during each shift to which the part 90 miner in the active workings of the mine is exposed, as measured with an approved sampling device and in terms of an equivalent concentration, at or below:

(a) 1.0 milligrams of respirable dust per cubic meter of air (mg/m^3).

(b) 0.5 mg/m^3 as of [date 6 months after the effective date of the final rule].

§ 90.101 Respirable dust standard when quartz is present.

(a) Each operator shall continuously maintain the average concentration of respirable quartz dust in the mine atmosphere during each shift to which a part 90 miner in the active workings of each mine is exposed at or below 0.1 mg/m^3 (100 micrograms per cubic meter or μg/m^3) as measured with an approved sampling device and in terms of an equivalent concentration.

(b) When the mine atmosphere of the active workings where the part 90 miner performs his or her normal work duties exceeds 100 μg/m^3 of respirable quartz dust, the operator shall continuously maintain the average concentration of respirable dust in the mine atmosphere during each shift to which a part 90 miner is exposed as measured with an approved sampling device and in terms of an equivalent concentration at or below the applicable standard. The applicable standard is computed by dividing the percent of quartz into the number 10. The application of this formula shall not result in an applicable standard that exceeds the standards specified in 90.100.

Example: Assume the part 90 miner is on a 0.5-mg/m^3 dust standard. Suppose a valid respirable dust sample with an equivalent concentration of 0.5 mg/m^3 contains 25.6% of quartz dust, which corresponds to a quartz concentration of 128 μg/m^3. Therefore, the average concentration of respirable dust in the mine atmosphere associated with that part 90 miner shall be maintained on each shift at or below 0.4 mg/m^3 (10/25.6% = 0.4 mg/m^3).

§ 90.102 Transfer; notice.

(a) Whenever a part 90 miner is transferred in order to meet the applicable standard, the operator shall transfer the miner to an existing position at the same coal mine on the same shift or shift rotation on which the miner was employed immediately before the transfer. The operator may transfer a part 90 miner to a different coal mine, a newly-created position or a position on a different shift or shift rotation if the miner agrees in writing to the transfer. The requirements of this paragraph do not apply when the respirable dust concentration in a part 90 miner's work position complies with the applicable standard but circumstances, such as reductions in workforce or changes in operational status, require a change in the miner's job or shift assignment.

(b) On or before the 20th calendar day following receipt of notification from MSHA that a part 90 miner is employed at the mine, the operator shall give the District Manager written notice of the occupation and, if applicable, the MMU unit to which the part 90 miner shall be assigned on the 21st calendar day following receipt of the notification from MSHA.

(c) After the 20th calendar day following receipt of notification from MSHA that a part 90 miner is employed at the mine, the operator shall give the

District Manager written notice before any transfer of a part 90 miner. This notice shall include the scheduled date of the transfer.

§ 90.103 Compensation.

(a) The operator shall compensate each part 90 miner at not less than the regular rate of pay received by that miner immediately before exercising the option under § 90.3.

(b) Whenever a part 90 miner is transferred, the operator shall compensate the miner at not less than the regular rate of pay received by that miner immediately before the transfer.

(c) Once a miner has been placed in a position in compliance with the provisions of part 90, paragraphs (a) and (b) of this section do not apply when the part 90 miner initiates and accepts a change in work assignment for reasons of job preference.

(d) The operator shall compensate each miner who is a section 203(b) miner on January 31, 1981, at not less than the regular rate of pay that the miner is required to receive under section 203(b) of the Act immediately before the effective date of this part.

(e) In addition to the compensation required to be paid under paragraphs (a), (b) and (d) of this section, the operator shall pay each part 90 miner the actual wage increases that accrue to the classification to which the miner is assigned.

(f) If a miner is temporarily employed in an occupation other than his or her regular work classification for two months or more before exercising the option under § 90.3, the miner's regular rate of pay for purposes of paragraph (a) and (b) of this section is the higher of the temporary or regular rates of pay. If the temporary assignment is for less than two months, the operator may pay the part 90 miner at his or her regular work classification rate regardless of the temporary wage rate.

(g) If a part 90 miner is transferred, and the Secretary subsequently notifies the miner that notice of the miner's eligibility to exercise the part 90 option was incorrect, the operator shall retain the affected miner in the current position to which the miner is assigned and continue to pay the affected miner the applicable rate of pay provided in paragraphs (a), (b), (d) and (e) of this section, until:

(1) The affected miner and operator agree in writing to a position with pay at not less than the regular rate of pay for that occupation; or

(2) A position is available at the same coal mine in both the same occupation and on the same shift on which the miner was employed immediately before exercising the option under § 90.3 or under the old section 203(b) program.

(i) When such a position is available, the operator shall offer the available position in writing to the affected miner with pay at not less than the regular rate of pay for that occupation.

(ii) If the affected miner accepts the available position in writing, the operator shall implement the miner's reassignment upon notice of the miner's acceptance. If the miner does not accept the available position in writing, the miner may be reassigned and protections under part 90 shall not apply. Failure by the miner to act on the written offer of the available position within 15 days after notice of the offer is received from the operator shall operate as an election not to accept the available position.

§ 90.104 Waiver of rights; re-exercise of option.

(a) A part 90 miner may waive his or her rights and be removed from MSHA's active list of miners who have rights under part 90 by:

(1) Giving written notification to the Chief, Division of Health, Coal Mine Safety and Health, MSHA, that the miner waives all rights under this part;

(2) Applying for and accepting a position in an area of a mine which the miner knows has an average respirable dust concentration exceeding the applicable standard; or

(3) Refusing to accept another position offered by the operator at the same coal mine that meets the requirements of §§ 90.100, 90.101 and 90.102(a) after dust sampling shows that the present position exceeds the applicable standard.

(b) If rights under part 90 are waived, the miner gives up all rights under part 90 until the miner re-exercises the option in accordance with § 90.3(e) (Part 90 option; notice of eligibility; exercise of option).

(c) If rights under part 90 are waived, the miner may re-exercise the option under this part in accordance with § 90.3(e) (Part 90 option; notice of eligibility; exercise of option) at any time.

29. Subpart C is revised to read as follows:

Subpart C—Sampling Procedures

Sec.

90.201 Sampling; general and technical requirements.
90.202 Certified person; sampling.
90.203 Certified person; maintenance and calibration.
90.204 Approved sampling devices; maintenance and calibration.
90.205 Approved sampling devices; operation; air flowrate.
90.206 CPDM Performance Plan.
90.207 Exercise of option or transfer sampling.
90.208 Compliance sampling; procedures for sampling with CMDPSUs.
90.209 Compliance sampling; procedures for sampling with CPDMs.
90.210 Respirable dust samples: transmission by operator.
90.211 Respirable dust samples; report to operator.
90.212 Status change reports.

§ 90.201 Sampling; general and technical requirements.

(a) CMDPSUs shall be used to take samples of the concentration of respirable coal mine dust in the working environment of each part 90 miner as required by this part until replaced by CPDMs. After [date 12 months after the effective date of the final rule], only approved CPDMs shall be used to sample part 90 miners unless notified by the Secretary.

(b) If using CMDPSUs, the sampling device shall be worn or carried to and from each part 90 miner. If using CPDMs, the sampling device shall be worn by the part 90 miner at all times. Approved sampling devices shall be operated portal to portal and shall be operational during the part 90 miner's entire shift, which includes the time spent performing normal work duties and while travelling to and from the assigned work location. If the work shift to be sampled is longer than 12 hours and the sampling device is:

(1) A CMDPSU, the operator shall switch-out the unit's sampling pump prior to the 13th-hour of operation.

(2) A CPDM, the operator shall switch-out the CPDM with a fully charged device prior to the 13th-hour of operation.

(c) Unless otherwise directed by the District Manager, the respirable dust samples required under this part using a CMDPSU shall be taken by placing the sampling device as follows:

(1) On the part 90 miner;

(2) On the piece of equipment which the part 90 miner operates within 36 inches of the normal working position; or

(3) At a location that represents the maximum concentration of dust to which the part 90 miner is exposed.

(d) If using a CMDPSU, one control filter shall be used for each shift of sampling. Each control filter shall:

(1) Have the same pre-weight date (noted on the dust data card) as the filter used for sampling;

(2) Remain plugged at all times;

(3) Be exposed to the same time, temperature, and handling conditions as the filter used for sampling; and

(4) Be kept with the exposed samples after sampling.

(e) The respirable dust samples required by this part and taken with a CMDPSU shall be collected while the part 90 miner is performing normal work duties.

(f) Records showing the length of each shift for each part 90 miner shall be made and retained for at least six months, and shall be made available for inspection by authorized representatives of the Secretary and submitted to the District Manager when requested in writing.

(g) Upon request from the District Manager, the operator shall submit the date and time any respirable dust sampling required by this part will begin. This information shall be submitted at least 48 hours prior to scheduled sampling.

(h) Operators using CPDMs shall provide training to all part 90 miners. The training shall be completed prior to a part 90 miner being required to wear the CPDM and then every 12 months thereafter. The training shall include:

(1) Explaining the basic features and capabilities of the CPDM;

(2) How to set-up the CPDM for compliance sampling;

(3) A discussion of the various types of information displayed by the CPDM and how to access that information;

(4) How to start and stop a short-term sample run during compliance sampling; and

(5) The importance of continuously monitoring dust concentrations and properly wearing the CPDM.

(i) An operator shall keep a record of the CPDM training at the mine site for two years after completion of the training. An operator may keep the record elsewhere if the record is immediately accessible from the mine site by electronic transmission. Upon request from an authorized representative of the Secretary or Secretary of HHS, the operator shall promptly provide access to any such training records.

§ 90.202 Certified person; sampling.

(a) The respirable dust sampling required by this part shall be performed by a certified person.

(b) To be certified, a person shall complete the applicable MSHA course of instruction and pass the MSHA examination demonstrating competency in sampling procedures. Persons not certified in sampling and those certified only in maintenance and calibration procedures in accordance with § 90.203(b) are not permitted to collect respirable dust samples required by this part or handle approved sampling devices when being used in sampling.

(c) To maintain certification, a person must pass the MSHA examination demonstrating competency in sampling procedures every three years.

(d) MSHA may revoke a person's certification for failing to pass the MSHA examination or to properly carry out the required sampling procedures.

§ 90.203 Certified person; maintenance and calibration.

(a) Approved sampling devices shall be maintained and calibrated by a certified person.

(b) To be certified, a person shall complete the applicable MSHA course of instruction and pass the MSHA examination demonstrating competency in maintenance and calibration procedures for approved sampling devices. If using a CMDPSU, necessary maintenance of the sampling head assembly can be performed by persons certified in sampling or in maintenance and calibration.

(c) To maintain certification, a person must pass the MSHA examination demonstrating competency in maintenance and calibration procedures every three years.

(d) MSHA may revoke a person's certification for failing to pass the MSHA examination or to properly carry out the required maintenance and calibration procedures.

§ 90.204 Approved sampling devices; maintenance and calibration.

(a) Approved sampling devices shall be maintained as approved under part 74 of this title and calibrated in accordance with MSHA Informational Report IR 1240 (1996) "Calibration and Maintenance Procedures for Coal Mine Respirable Dust Samplers" or in accordance with the manufacturer's recommendations if using a CPDM. Only persons certified in maintenance and calibration can perform maintenance on the pump unit of approved sampling devices.

(b) Approved sampling devices shall be calibrated at the flowrate of 2.0 liters of air per minute (L/min), or at a different flowrate recommended by the manufacturer or prescribed by the Secretary or Secretary of HHS for the particular device, before they are put into service and, thereafter, at time intervals recommended by the manufacturer or prescribed by the Secretary or Secretary of HHS.

(c) If using a CMDPSU, sampling devices shall be examined and tested by a person certified in sampling or in maintenance and calibration within 3 hours before the start of the shift on which the approved sampling devices will be used to collect respirable dust samples. This is to assure that the sampling devices are clean and in proper working condition. This examination and testing shall include the following:

(1) Examination of all components of the cyclone assembly to assure that they are clean and free of dust and dirt. This includes examining the interior of the connector barrel (located between the cassette assembly and vortex finder), vortex finder, cyclone body and grit pot;

(2) Examination of the inner surface of the cyclone body to assure that it is free of scoring or scratch marks on the inner surface of the cyclone where the air flow is directed by the vortex finder into the cyclone body;

(3) Examination of the external hose connecting the pump unit to the sampling head assembly to assure that it is clean and free of leaks; and

(4) Examination of the clamping and positioning of the cyclone body, vortex finder and cassette to assure that they are rigid, in alignment, firmly in contact and airtight.

(5) Testing the voltage of each battery while under actual load to assure the battery is fully charged. This requires that a fully assembled and examined sampling head assembly be attached to the pump inlet with the pump unit running when the voltage check is made. The voltage for nickel cadmium cell batteries shall not be lower than the product of the number of cells in the battery multiplied by 1.25. The voltage for other than nickel cadmium cell batteries shall not be lower than the product of the number of cells in the battery multiplied by the manufacturer's nominal voltage per cell value.

(d) If using a CPDM, the certified person in sampling or in maintenance and calibration shall follow the examination, testing and set-up procedures contained in the approved CPDM Performance Plan.

(e) MSHA Informational Report IR 1240 (1996) referenced in paragraph (a) of this section is incorporated-by-reference. This incorporation-by-reference was approved by the Director of the Federal Register in accordance with 5 U.S.C. 552(a) and 1 CFR part 51. Copies may be inspected or obtained at MSHA, Coal Mine Safety and Health, 1100 Wilson Blvd., Room 2424, Arlington, Virginia 22209–3939 and at each MSHA Coal Mine Safety and Health district office. Copies may be inspected at the National Archives and Records Administration (NARA). For information on the availability of this material at NARA, call 202–741–6030, or go to: *http://www.archives.gov/*

federal_register/ code_of_federal_regulations/ ibr_locations.html.

§ 90.205 Approved sampling devices; operation; air flowrate.

(a) Approved sampling devices shall be operated at the flowrate of 2.0 L/min, or at a different flowrate recommended by the manufacturer or prescribed by the Secretary or Secretary of HHS.

(b) Except as provided in paragraph (c) of this section, each approved sampling device shall be examined each shift by a person certified in sampling during:

(1) The second hour after being put into operation to assure it is in the proper location, operating properly and at the proper flowrate. If the proper flowrate is not maintained, necessary adjustments shall be made by the certified person. This examination is not required if the sampling device is being operated in a breast or chamber of an anthracite coal mine where the full box mining method is used.

(2) The last hour of operation to assure that the sampling device is operating properly and at the proper flowrate. If the proper flowrate is not maintained, the respirable dust sample shall be transmitted to MSHA with a notation by the certified person on the back-side of the dust data card stating that the proper flowrate was not maintained. Other events occurring during the collection of respirable dust samples that may affect the validity of the sample, such as dropping of the sampling head assembly onto the mine floor, shall be noted on the back-side of the dust data card.

(c) If using a CPDM, the certified person shall examine the sampling device during the shift in accordance with the procedures contained in the approved CPDM Performance Plan to assure sampling devices are operating properly.

§ 90.206 CPDM Performance Plan.

(a) If using a CPDM, the operator shall have a CPDM Performance Plan approved by the District Manager to ensure that no part 90 miner is exposed to concentrations of respirable coal mine dust in excess of the applicable standard when performing normal work duties. An operator shall not implement a proposed CPDM Performance Plan until approved by the District Manager.

(b) The proposed CPDM Performance Plan and any proposed revision to the plan shall be submitted in writing to the District Manager, and shall be reviewed and approved in accordance with §§ 90.300 and 90.301 of this chapter.

(c) The approved CPDM Performance Plan shall include the names or titles of the responsible mine officials designated by the operator and the following information:

(1) The specific part 90 miner who will be sampled, identified by the miner's unique 8-digit MSHA Individual Identification Number (MIIN).

(2) The pre-operational examinations, testing and set-up procedures to verify the operational readiness of the sampling device before each sampling shift;

(3) Procedures that address downloading of end-of-shift sampling information, and validation and certification of reported results;

(4) Procedures for weekly transmittals of certified sampling data files electronically to MSHA;

(5) The routine daily and other required scheduled maintenance procedures;

(6) Procedures or methods for verifying the calibration of each CPDM; and

(7) The frequency with which dust concentrations being reported by the CPDM shall be monitored by the designated mine official during the shift;

(8) The types of actions permitted to be taken during the shift to ensure the environment of the occupation being sampled remains in compliance at the end of the shift.

(9) Any other information required by the District Manager.

(d) A copy of the approved CPDM Performance Plan and any revisions pertaining to a part 90 miner shall be provided to the affected part 90 miner. The operator shall not post a copy of the plan or any revisions on the mine bulletin board.

(e) The District Manager may require an approved CPDM Performance Plan to be revised if the District Manager determines that the plan is inadequate to protect the part 90 miner from exposure to concentrations of respirable dust in excess of the applicable standard.

§ 90.207 Exercise of option or transfer sampling.

(a) The operator shall take five valid respirable dust samples for each part 90 miner within 15 calendar days after:

(1) The 20-day period specified for each part 90 miner in § 90.100;

(2) Receipt of notification from MSHA that any respirable dust sample taken in accordance with § 90.208 exceeds the applicable standard.

(3) Implementing any transfer after the 20th calendar day following receipt of notification from MSHA that a part 90 miner is employed at the mine.

§ 90.208 Compliance sampling; procedures for sampling with CMDPSUs.

(a) Each operator shall take five valid representative samples every calendar quarter from the environment of the part 90 miner while performing normal work duties. Part 90 miner samples shall be collected on consecutive work days. The quarterly periods are:

January 1–March 31
April 1–June 30
July 1–September 30
October 1–December 31

(b) When the respirable dust standard is changed in accordance with § 90.101, the new applicable standard shall become effective on the first shift on which the part 90 miner is performing normal work duties following receipt of notification of such change from MSHA.

(1) If all samples from the most recent quarterly sampling period do not exceed the new applicable standard, respirable dust sampling of the part 90 miner shall begin on the first shift on which the miner is performing normal work duties during the next quarterly period following notification of such change.

(2) If any sample from the most recent quarterly sampling period exceeds the new applicable standard, the operator shall make necessary adjustments to the dust control parameters within three days and then collect samples from the affected part 90 miner on consecutive work days until five valid representative samples are collected. The samples collected will be treated as normal quarterly samples under this part.

(c) No valid single-shift equivalent concentration shall meet or exceed the excessive concentration value (ECV) that corresponds to the applicable standard in Table 90–1.

(d) Upon issuance of a citation for a violation of the applicable standard, paragraphs (a) and (b)(2) of this section shall not apply to that part 90 miner until the violation is abated in accordance with paragraph (e) of this section.

(e) During the time for abatement fixed in a citation for violation of the applicable standard, the operator shall take the following actions:

(1) Make approved respiratory equipment available to the affected part 90 miner in accordance with § 72.700 of this chapter;

(2) Submit to the District Manager for approval proposed corrective actions to lower the concentration of respirable dust to within the applicable standard. If the corrective action involves:

(i) Reducing the respirable dust levels in the work environment of the part 90

miner identified in the citation, the operator shall implement the proposed corrective actions following receipt of approval by the District Manager and then sample the affected miner until five valid representative samples are taken.

(ii) Transferring the part 90 miner to another work position at the mine to meet the applicable standard, the operator shall comply with § 90.102 and then sample the affected miner in accordance with § 90.207(a).

(f) A citation for violation of the applicable standard shall be terminated by MSHA when the equivalent concentration of each of the five valid operator abatement samples is at or below the applicable standard and, within 15 calendar days after receipt of sampling results from MSHA indicating the concentration has been reduced to or below the applicable standard, the operator has submitted to the District Manager for approval a proposed dust control plan for that part 90 miner or proposed changes to the approved dust control plan as prescribed in § 90.300. The revised parameters shall reflect the control measures used to maintain the concentration of respirable dust to or below the applicable standard.

(g) When the equivalent concentration of one or more valid samples collected by the operator under this section exceeds the applicable standard but is less than the applicable ECV in Table 90–1, the operator shall:

(1) Make approved respiratory equipment available to the affected part 90 miner in accordance with § 72.700 of this chapter;

(2) Take corrective action to lower the concentration of respirable dust to or below the applicable standard.

(3) Record the corrective actions taken in the same manner as the records for hazardous conditions required by § 75.363 of this chapter.

TABLE 90–1—EXCESSIVE CONCENTRATION VALUES (ECV) BASED ON SINGLE-SHIFT CMDPSU EQUIVALENT CONCENTRATION MEASUREMENTS

Applicable standard (mg/m³)	ECV (mg/m³)
1.0	1.26
0.9	1.16
0.8	1.05
0.7	0.95
0.6	0.85
0.5	0.74
0.4	0.65
0.3	0.54
0.2	0.44

§ 90.209 Compliance sampling; procedures for sampling with CPDMs.

(a) Each operator shall sample the working environment of the part 90 miner during each shift, seven days per week (Sunday through Saturday), if applicable, 52 weeks per year.

(b) When the respirable dust standard is changed in accordance with § 90.101, the new applicable standard shall become effective on the first shift on which the part 90 miner is performing normal work duties following receipt of notification of such change from MSHA.

(c) No valid end-of-shift equivalent concentration shall meet or exceed the excessive concentration value (ECV) that corresponds to the applicable standard in Table 90–2.

(d) No weekly accumulated exposure shall exceed the weekly permissible accumulated exposure.

(e) When a valid end-of-shift equivalent concentration meets or exceeds the applicable ECV or a weekly accumulated exposure exceeds the weekly permissible accumulated exposure, the operator shall take the following actions before the part 90 miner's next work shift:

(1) Make approved respiratory equipment available to affected part 90 miners in accordance with § 72.700 of this chapter;

(2) Implement corrective actions to assure compliance with the applicable standard on the next and other subsequent work shifts;

(3) If the corrective actions implemented to lower the concentration of respirable dust to within the applicable standard involve implementation of dust control measures, the operator shall submit to the District Manager for approval, within 3 days of determining that the applicable standard has been exceeded, the corrective actions as a proposed dust control plan for the part 90 miner or proposed changes to the approved part 90 dust control plan as prescribed in § 90.300;

(4) Review the adequacy of the approved CPDM Performance Plan applicable to the part 90 miner. The operator shall submit any plan revisions to the District Manager for approval within 7 calendar days after the operator provides the end-of-shift equivalent concentration or the weekly accumulated exposure to the affected part 90 miner; and

(5) Record the reported excessive dust condition as part of and in the same manner as the records for hazardous conditions required by § 75.363 of this chapter. The record shall include:

(i) Dates of sampling;

(ii) Lengths of sampled shifts;

(iii) Locations within the mine and the occupation where samples were collected;

(iv) The end-of-shift equivalent concentration or weekly accumulated exposure and the weekly permissible accumulated exposure; and

(v) Corrective actions taken to reduce the concentration of respirable coal mine dust to or below the applicable standard.

(6) If the corrective action involves transferring the part 90 miner to another position at the mine to meet the applicable standard, the operator shall comply with § 90.102(c) and then sample the affected miner in accordance with § 90.207(a).

(f) When any valid end-of-shift equivalent concentration exceeds the applicable standard but is less than the applicable ECV in Table 90–2, the operator shall take the following actions:

(1) Make approved respiratory equipment available to affected part 90 miners in accordance with § 72.700 of this chapter;

(2) Implement corrective actions to assure compliance with the applicable standard on the next and other subsequent work shifts; and

(3) Record the reported excessive dust condition as part of and in the same manner as the records for hazardous conditions required by § 75.363 of this chapter. The record shall include:

(i) Date of sampling;

(ii) Length of the sampled shift;

(iii) Location within the mine and the occupation where the sample was collected;

(iv) The end-of-shift equivalent concentration; and

(v) Corrective action taken to reduce the concentration of respirable coal mine dust to or below the applicable standard; and

(4) Review the adequacy of the approved CPDM Performance Plan applicable to part 90 miners. The operator shall submit any plan revisions to the District Manager for approval within 7 calendar days after the operator provides the end-of-shift equivalent concentration to the affected part 90 miner.

TABLE 90–2—EXCESSIVE CONCENTRATION VALUES (ECV) BASED ON SINGLE–SHIFT CPDM EQUIVALENT CONCENTRATION MEASUREMENTS

Applicable standard (mg/m³)	ECV (mg/m³)
1.0	1.13
0.9	1.02
0.8	0.91

TABLE 90–2—EXCESSIVE CONCENTRATION VALUES (ECV) BASED ON SINGLE–SHIFT CPDM EQUIVALENT CONCENTRATION MEASUREMENTS—Continued

Applicable standard (mg/m³)	ECV (mg/m³)
0.7	0.80
0.6	0.68
0.5	0.57
0.4	0.46
0.3	0.34
0.2	0.23

§ 90.210 Respirable dust samples; transmission by operator.

(a) If using a CMDPSU, the operator shall transmit within 24 hours after the end of the sampling shift all samples collected to fulfill the requirements of this part in containers provided by the manufacturer of the filter cassette to: Respirable Dust Processing Laboratory, Pittsburgh Safety and Health Technology Center, Cochrans Mill Road, Building 38, P.O. Box 18179, Pittsburgh, Pennsylvania 15236–0179, or to any other address designated by the District Manager.

(b) The operator shall not open or tamper with the seal of any filter cassette or alter the weight of any filter cassette before or after it is used to fulfill the requirements of this part.

(c) A person certified in sampling shall properly complete the dust data card that is provided by the manufacturer for each filter cassette. The card shall have an identification number identical to that on the cassette used to take the sample and be submitted to MSHA with the sample. Each card shall be signed by the certified person who actually performed the required examinations during the sampling shift and shall include that person's MSHA Individual Identification Number (MIIN). Respirable dust samples with data cards not properly completed shall be voided by MSHA.

(d) All respirable dust samples collected by the operator shall be considered taken to fulfill the sampling requirements of part 70, 71 or 90 of this title, unless the sample has been identified in writing by the operator to the District Manager, prior to the intended sampling shift, as a sample to be used for purposes other than required by part 70, 71 or 90 of this title.

(e) Respirable dust samples received by MSHA in excess of those required by this part shall be considered invalid samples.

(f) If using a CPDM, the designated mine official shall validate, certify and transmit electronically to MSHA within 12 hours after the end of the last sampling shift of the work week all daily sample and error data file information collected during the previous calendar week (Sunday through Saturday) and stored in the CPDM. All CPDM data files transmitted to MSHA shall be maintained by the operator for at least 12 months.

§ 90.211 Respirable dust samples; report to operator.

(a) MSHA shall provide the operator a report with the following data on respirable dust samples submitted in accordance with this part:

(1) The mine identification number;

(2) The locations within the mine from which the samples were taken;

(3) The concentration of respirable dust, expressed as an equivalent concentration in milligrams per cubic meter of air, for each valid sample;

(4) The average concentration of respirable dust, expressed as an equivalent concentration in milligrams per cubic meter of air, for all valid samples;

(5) The occupation code;

(6) The reason for voiding any sample; and

(7) The part 90 miner's MSHA Individual Identification Number (MIIN).

(b) Upon receipt, the operator shall provide a copy of this report to the part 90 miner. The operator shall not post the original or a copy of this report on the mine bulletin board.

(c) If using a CPDM, the designated mine official shall validate, certify and provide to each part 90 miner:

(1) Within the first hour of the part 90 miner's next work shift, the daily end-of-shift sampling results applicable to that part 90 miner. The daily report shall include:

(i) The mine identification number;

(ii) The location within the mine from which the samples were taken;

(iii) The concentration of respirable dust, expressed as an equivalent concentration in milligrams per cubic meter of air, for each valid sample;

(iv) The total amount of exposure accumulated by the part 90 miner;

(v) The occupation code;

(vi) The reason for voiding any sample;

(vii) The part 90 miner's MSHA Individual Identification Number (MIIN).

(viii) The shift length; and

(ix) Any other information required by the District Manager.

(2) Within 1 hour after the start of the part 90 miner's next work shift of a new work week (Sunday through Saturday), the weekly accumulated exposure and the weekly permissible accumulated exposure applicable to that part 90 miner.

(d) The operator shall not post data on respirable dust samples for part 90 miners on the mine bulletin board.

§ 90.212 Status change reports.

(a) If there is a change in the status of a part 90 miner (such as entering a terminated, injured or ill status, or returning to work), the operator shall report the change in the status of the part 90 miner to the MSHA District Office or to any other MSHA office designated by the District Manager. Status changes shall be reported in writing or by electronic means within 3 working days after the status change has occurred.

(b) Status changes affecting the operational readiness of any CPDM shall be reported by the designated mine official to the MSHA District Office or to any other MSHA office designated by the District Manager within 24 hours after the status change has occurred. Status changes shall be reported in writing or electronically.

30. Subpart D is revised to read as follows:

Subpart D—Respirable Dust Control Plans

Sec.

90.300 Respirable dust control plan; filing requirements.

90.301 Respirable dust control plan; approval by District Manager; copy to part 90 miner.

§ 90.300 Respirable dust control plan; filing requirements.

(a) As required by § 90.208(f) and § 90.209(e)(3), the operator shall submit to the District Manager for approval a written respirable dust control plan for the part 90 miner in the position identified in the citation. The respirable dust control plan and revisions thereof shall be suitable to the conditions and the mining system of the coal mine and shall be adequate to continuously maintain respirable dust within the applicable standard for that part 90 miner.

(b) Each respirable dust control plan shall include at least the following:

(1) The mine identification number assigned by MSHA, the operator's name, mine name, mine address, and mine telephone number and the name, address and telephone number of the principal officer in charge of health and safety at the mine;

(2) The name and MSHA Individual Identification Number of the part 90 miner and the position at the mine to which the plan applies;

(3) A detailed description of the specific respirable dust control measures used to continuously maintain concentrations of respirable coal mine dust at or below the applicable standard; and

(4) A detailed description of how each of the respirable dust control measures described in response to paragraph (b)(3) of this section will continue to be used by the operator, including at least the specific time, place and manner the control measures will be used.

§ 90.301 Respirable dust control plan; approval by District Manager; copy to part 90 miner.

(a) The District Manager will approve respirable dust control plans on a mine-by-mine basis. When approving respirable dust control plans, the District Manager shall consider whether:

(1) The respirable dust control measures would be likely to maintain concentrations of respirable coal mine dust at or below the applicable standard; and

(2) The operator's compliance with all provisions of the respirable dust control plan could be objectively ascertained by MSHA.

(b) MSHA may take respirable dust samples to determine whether the respirable dust control measures in the operator's plan effectively maintain concentrations of respirable coal mine dust at or below the applicable standard.

(c) The operator shall comply with all provisions of each respirable dust control plan upon notice from MSHA that the respirable dust control plan is approved.

(d) The operator shall provide a copy of the current respirable dust control plan required under this part to the part 90 miner. The operator shall not post the original or a copy of the plan on the mine bulletin board.

(e) The operator may review respirable dust control plans and submit proposed revisions to such plans to the District Manager for approval.

[FR Doc. 2010–25249 Filed 10–14–10; 8:45 am]

BILLING CODE 4510–43–P

Federal Register

Tuesday,
October 19, 2010

Part III

Department of Commerce

National Oceanic and Atmospheric Administration

50 CFR Part 218

Taking and Importing Marine Mammals; Military Training Activities Conducted Within the Gulf of Alaska (GoA) Temporary Maritime Activities Area (TMAA); Proposed Rule

DEPARTMENT OF COMMERCE

National Oceanic and Atmospheric Administration

50 CFR Part 218

[Docket No. 100817363–0365–02]

RIN 0648–BA14

Taking and Importing Marine Mammals; Military Training Activities Conducted Within the Gulf of Alaska (GoA) Temporary Maritime Activities Area (TMAA)

AGENCY: National Marine Fisheries Service (NMFS), National Oceanic and Atmospheric Administration (NOAA), Commerce.

ACTION: Proposed rule; request for comments.

SUMMARY: NMFS has received a request from the U.S. Navy (Navy) for authorization to take marine mammals incidental to training activities conducted in the Gulf of Alaska (GoA) Temporary Maritime Activities Area (TMAA) for the period December 2010 through December 2015. Pursuant to the Marine Mammal Protection Act (MMPA), NMFS proposes regulations to govern that take and requests information, suggestions, and comments on these proposed regulations. Specifically, we encourage the public to recommend effective, regionally specific methods for augmenting existing marine mammal density, distribution, and abundance information in the GoA TMAA and to prioritize the specific density and distribution data needs in the area (species, time of year, etc.). This information will ensure the design of the most effective Monitoring Plan with the resources available.

DATES: Comments and information must be received no later than November 18, 2010.

ADDRESSES: You may submit comments, identified by 0648–BA14, by any one of the following methods:

- *Electronic Submissions:* Submit all electronic public comments via the Federal eRulemaking Portal *http://www.regulations.gov.*
- Hand delivery or mailing of paper, disk, or CD–ROM comments should be addressed to Michael Payne, Chief, Permits, Conservation and Education Division, Office of Protected Resources, National Marine Fisheries Service, 1315 East-West Highway, Silver Spring, MD 20910–3225.

Instructions: All comments received are a part of the public record and will generally be posted to *http://www.regulations.gov* without change. All Personal Identifying Information (for example, name, address, etc.) voluntarily submitted by the commenter may be publicly accessible. Do not submit Confidential Business Information or otherwise sensitive or protected information.

NMFS will accept anonymous comments (enter N/A in the required fields if you wish to remain anonymous). Attachments to electronic comments will be accepted in Microsoft Word, Excel, WordPerfect, or Adobe PDF file formats only.

FOR FURTHER INFORMATION CONTACT: Jolie Harrison, Brian D. Hopper, or Michelle Magliocca, Office of Protected Resources, NMFS, (301) 713–2289.

SUPPLEMENTARY INFORMATION:

Availability

A copy of the Navy's application, as well as the draft Monitoring Plan and the draft Stranding Response Plan for GoA TMAA, may be obtained by writing to the address specified above (See **ADDRESSES**), telephoning the contact listed above (see **FOR FURTHER INFORMATION CONTACT**), or visiting the internet at: *http://www.nmfs.noaa.gov/pr/permits/incidental.htm#applications.* The Navy's Draft Environmental Impact Statement (DEIS) for GoA TMAA was published on December 11, 2009 and may be viewed at *http://www.nmfs.noaa.gov/pr/permits/incidental.htm#applications.* NMFS participates in the development of the Navy's EIS as a cooperating agency under NEPA.

Background

Sections 101(a)(5)(A) and (D) of the MMPA (16 U.S.C. 1361 *et seq.*) direct the Secretary of Commerce (Secretary) to allow, upon request, the incidental, but not intentional taking of marine mammals by U.S. citizens who engage in a specified activity (other than commercial fishing) during periods of not more than five consecutive years each if certain findings are made and regulations are issued or, if the taking is limited to harassment, notice of a proposed authorization is provided to the public for review.

Authorization shall be granted if NMFS finds that the taking will have a negligible impact on the species or stock(s), will not have an unmitigable adverse impact on the availability of the species or stock(s) for subsistence uses, and if the permissible methods of taking and requirements pertaining to the mitigation, monitoring and reporting of such taking are set forth. NMFS has defined "negligible impact" in 50 CFR 216.103 as an impact resulting from the specified activity that cannot be reasonably expected to, and is not reasonably likely to, adversely affect the species or stock through effects on annual rates of recruitment or survival.

The National Defense Authorization Act of 2004 (NDAA) (Pub. L. 108–136) modified the MMPA by removing the "small numbers" and "specified geographical region" limitations and amended the definition of "harassment" as it applies to a "military readiness activity" to read as follows (Section 3(18)(B) of the MMPA): any act that injures or has the significant potential to injure a marine mammal or marine mammal stock in the wild [Level A Harassment]; or any act that disturbs or is likely to disturb a marine mammal or marine mammal stock in the wild by causing disruption of natural behavioral patterns, including, but not limited to, migration, surfacing, nursing, breeding, feeding, or sheltering, to a point where such behavioral patterns are abandoned or significantly altered [Level B Harassment].

Summary of Request

In March 2009, NMFS received an application from the Navy requesting authorization to take individuals of 20 species of marine mammals (15 cetaceans and 5 pinnipeds) incidental to upcoming training activities to be conducted from December 2010 through December 2015 in the GoA TMAA, which is a 42,146 square nautical mile (nm^2) (145,482 km^2) polygon roughly the shape of a 300 nm (555.6 km) by 150 nm (277.8 km) rectangle oriented northwest to southeast in the long direction. NMFS subsequently requested additional information, which was provided in November 2009 in the form of a revised application. These training activities are classified as military readiness activities under the provisions of the NDAA of 2004. These military readiness activities may incidentally take marine mammals within the TMAA by exposing them to sound from mid-frequency or high-frequency active sonar (MFAS/HFAS) or underwater detonations. The Navy requests authorization to take individuals of 20 species of cetaceans and pinnipeds by Level B Harassment. Further, although it does not anticipate that it will occur, the Navy requests authorization to take, by injury or mortality, up to 15 individual beaked whales (of any of the following species: Baird's beaked whale, Cuvier's beaked whale, Stejneger's beaked whale) over the course of the 5-year regulations.

Description of Specified Activities

Purpose and Background

The Navy's mission is to maintain, train, and equip combat-ready naval forces capable of winning wars, deterring aggression, and maintaining freedom of the seas. Section 5062 of Title 10 of the United States Code directs the Chief of Naval Operations to train all military forces for combat. The Chief of Naval Operations meets that direction, in part, by conducting at-sea training exercises and ensuring naval forces have access to ranges, operating areas (OPAREAs) and airspace where they can develop and maintain skills for wartime missions and conduct research, development, testing, and evaluation (RDT&E) of naval systems.

The specified training activities addressed in this proposed rule are a subset of the Proposed Action described in the GoA TMAA DEIS, which would support and maintain Department of Defense training and assessments of current capabilities. Training does not include combat operations, operations in direct support of combat, or other activities conducted primarily for purposes other than training. The Department of Defense proposes to implement actions within the GoA TMAA to:

- Increase the number of training activities from current levels (up to 14 days) as necessary to support Fleet exercise requirements (that could last up to 21 days between April and October);
- Conduct training in the Primary Mission Areas (PMARs) including Anti-Air Warfare (AAW), Anti-Surface Warfare (ASUW), Anit-Submarine Warfare (ASW), Naval Special Warfare (NSW), Strike Warfare (STW), and Electronic Combat (EC). Conduct of training may include that necessary for newer systems, instrumentation, and platforms, including the EA–18G Growler aircraft, Guided Missile Submarines (SSGN), P–8 Poseidon Multimission Maritime Aircraft (MMA), Guided Missile Destroyer (DDG) 1000 (Zumwalt Class) destroyer, and several types of Unmanned Aerial Systems (UASs);
- Accommodate training enhancement instrumentation, to include the use of a Portable Undersea Tracking Range (PUTR);
- Conduct an additional Carrier Strike Group (CSG) exercise during the months of April through October, which could also last up to 21 days (first CSG exercise being part of the baseline No Action Alternative); and
- Conduct a Sinking Exercise (SINKEX) during each summertime exercise (maximum of two) in the TMAA.

The proposed action would result in the following increases (above those conducted in previous years, *i.e.,* the No Action Alternative in the Navy's DEIS) in activities associated with the annual take of marine mammals:

- Helicopter Anti-submarine Warfare (ASW) tracking exercise (TRACKEX) (includes use of MFAS and HFAS dipping sonar and sonobuoys)
- Surface ASW TRACKEX (includes use of hull-mounted MFAS)
- Submarine ASW (includes use of hull-mounted MFAS and HFAS)
- Fixed-wing Marine Patrol Aircraft (MPA) ASW TRACKEX (includes use of sonobuoys)
- Extended Echo Ranging ASW (includes explosive sonobuoys)
- Bombing Exercises (BOMBEX)
- Sinking Exercises (SINKEX)
- Gunnery Exercises (GUNEX)

Overview of the GoA TMAA

Since the 1990s, the Navy has participated in a major joint training exercise that involves the Departments of the Navy, Army, Air Force, and Coast Guard participants reporting to a unified or joint commander who coordinates the activities planned to demonstrate and evaluate the ability of the services to engage in a conflict and carry out plans in response to a threat to national security. Previous exercises in the TMAA have occurred in the summer (April–October) timeframe due to the extreme cold weather and sea state conditions in the TMAA during the winter months. The areas making up the Alaska Training Areas (ATAs) (see figure 1–1 in the Navy's application) consist of 3 components: (1) TMAA; (2) U.S. Air Force over-land Special Use Airspace (SUA) and air routes over the GoA and State of Alaska; and (3) U.S. Army training lands.

Within the northeastern GoA, the TMAA is comprised of the 42,146 square nautical miles (nm^2) (145,482 square kilometer (km^2) of surface and subsurface area and 88,731 nm^2 (305,267 km^2)) of special use airspace (SUA) (not including the portion of Warning Area 612 [W–612] that falls outside of the TMAA). The TMAA is roughly rectangular and oriented from northwest to southeast, approximately 300 nautical miles (nm) (556 kilometer (km)) long by 150 nm (278 km) wide, situated south of Prince William Sound and east of Kodiak Island. With the exception of Cape Cleare on Montague Island located over 12 nm (22 km) from the northern point of the TMAA, the nearest shoreline (Kenai Peninsula) is located approximately 24 nm (44 km) north of the TMAA's northern boundary. The approximate middle of the TMAA is located 140 nm (259 km) offshore.

The abyssal plain in the GoA gradually shoals from a 16,400 feet (ft) (5,000 meter (m)) depth in the southwestern GoA to less than 9,843 ft (3,000 m) in the northeastern expanses of the Gulf. Maximal depths exceed 22,965 ft (7,000 m) near the central Aleutian Trench along the continental slope south of the Aleutian Islands. Numerous seamounts, remnants of submarine volcanoes, are scattered across the central basin. Several of the seamounts rise to within a few hundred meters of the sea surface.

Ocean circulation in the GoA is defined by the cyclonic motion of the Pacific subpolar gyre (also referred to as the Alaska Gyre), which is composed of the North Pacific Current, the Alaska Current, and the Alaskan Stream. Circulation patterns along the shelf divide the region into the inner shelf (or Alaska Coastal Current domain), the mid-shelf, and the outer shelf including the shelf break (DoN, 2006). The center of the gyre is located at approximately 52 to 53 °N and 145 to 155 °W. Nearshore flow is dominated by the Alaskan Coastal Current and is less organized than the flow found along the shelf break and slope. The northwestern GoA also includes several prominent geological features that influence the regional oceanography. For example, Kayak Island extends 50 km across the continental shelf to the east of the Copper River. This island can deflect shelf waters farther offshore delivering high concentrations of suspended sediment to the outer shelf (DoN, 2006).

During winter months, intense circulation over the GoA produces easterly coastal winds and downwelling, both of which result in a well-mixed water column. During the summer, stratification develops due to decreased winds, increased freshwater discharge, and increased solar radiation. Under summer and fall conditions, the shelf waters are stratified with the upper water column temperatures at their maximum and salinities at their minimum. On longer time scales, there is evidence of interannual variation in the circulation patterns within the GoA. These variations result from the climatic variability of the El Niño Southern Oscillation (ENSO) and the Pacific Decadal Oscillation (PDO) (DoN, 2006).

Generally, two surface temperature regimes characterize the northern expanses of the GoA throughout the year. Relatively warm surface water occurs over the continental shelf, while colder water is found farther offshore

beyond the shelf break. Thermal stratification remains weak until late May or June, then strong stratification persists through the summer months. As winds intensify in the fall, stratification dissipates, due to stronger vertical mixing and increased downwelling, surface waters sink along the coast, and the thermocline deepens throughout the region. Along the continental shelf and within the coastal fjords, waters are often highly stratified by both salinity and temperature; an intense thermocline occurs at approximately 82 ft (25 m). Farther offshore in the Alaskan Stream, maximal stratification occurs between depths of 328 ft to 984 ft (100 to 300 m) and is associated primarily with a permanent halocline in the GoA (DoN, 2006).

Specified Activities

As mentioned above, the Navy has requested MMPA authorization to take marine mammals incidental to training in the GoA TMAA that would result in the generation of sound or pressure waves in the water at or above levels that NMFS has determined will likely result in take (see Acoustic Take Criteria Section), either through the use of MFAS/HFAS or the detonation of explosives in the water. These activities are discussed in the subsections below. In addition to use of active sonar sources and explosives, these activities include the operation and movement of vessels that are necessary to conduct the training, and the effects of this part of the activities are also analyzed in this document.

The Navy's application also briefly summarizes Air Combat Maneuvers (ACM), Visit Board Search and Seizure/Vessels of Interest (VBSS/VOI), Maritime Interdiction (MI), Chaff Exercises, Sea Surface Control (SSC), and Naval Special Warfare Insertion/Extraction exercises; however, these activities are primarily air or land based and do not utilize sound sources or explosives in the water. No take of marine mammals is anticipated to result from these activities and, therefore, they are not discussed further.

Activities Utilizing Active Sonar Sources

For the GoA TMAA, the training activities that utilize active tactical sonar sources fall primarily into the category of Anti-submarine Warfare (ASW). This section includes a description of ASW, the active acoustic devices used in ASW exercises, and the exercise types in which these acoustic sources are used.

ASW Training and Active Sonar

ASW training involves helicopter and sea control aircraft, ships, and submarines, operating alone or in combination, to locate, track, and neutralize submarines. Various types of active and passive sonar are used by the Navy to determine water depth, locate mines, and identify, track, and target submarines. Passive sonar "listens" for sound waves by using underwater microphones, called hydrophones, which receive, amplify, and process underwater sounds. No sound is introduced into the water when using passive sonar. Passive sonar can indicate the presence, character, and movement of submarines. However, passive sonar only provides information about the bearing (direction) to a sound-emitting source; it does not provide an accurate range (distance) to the source. Also, passive sonar relies on the underwater target itself to provide sufficient sound to be detected by hydrophones. Active sonar is needed to locate objects that emit little or no noise (such as mines or diesel-electric submarines operating in electric mode) and to establish both bearing and range to the detected contact.

Active sonar transmits pulses of sound that travel through the water, reflect off objects, and return to a receiver. By knowing the speed of sound in water and the time taken for the sound wave to travel to the object and back, active sonar systems can quickly calculate direction and distance from the sonar platform to the underwater object. There are three frequency range classifications for active sonar: Low-frequency (LF), mid-frequency (MF), and high-frequency (HF).

MFAS, as defined in the Navy's GoA TMAA LOA application, operates between 1 and 10 kHz, with detection ranges up to 10 nm (19 km). Because of this detection ranging capability, MFAS is the Navy's primary tool for conducting ASW. Many ASW experiments and exercises have demonstrated that the improved capability (of MFAS over other sources) for mid-range detection of adversary submarines before they are able to conduct an attack is essential to U.S. ship survivability. Today, ASW is the Navy's number one war-fighting priority. Navies across the world utilize modern, quiet, diesel-electric submarines that pose the primary threat to the U.S. Navy's ability to perform a number of critical missions. Extensive ASW training is necessary for sailors on ships and in strike groups to gain proficiency using MFAS. Moreover, if a strike group does not demonstrate MFAS proficiency, it cannot be certified as combat ready.

HFAS, as defined in the Navy's GoA TMAA LOA application, operates at frequencies greater than 10 kilohertz (kHz). At higher acoustic frequencies, sound rapidly dissipates in the ocean environment, resulting in short detection ranges, typically less than five nm (9 km). High-frequency sonar is used primarily for determining water depth, hunting mines, and guiding torpedoes, which are all short range applications. Training exercises in the GoA TMAA will include the use of HFAS.

Low-frequency sources operate below 1 kHz. Sonar in this frequency range is designed to detect extremely quiet diesel-electric submarines at ranges far beyond the capabilities of MFA sonars. Currently, there are only two ships in use by the Navy equipped with low-frequency sonar; both are ocean surveillance vessels operated by Military Sealift Command. While Surveillance Towed Array Sensor System (SURTASS) low-frequency active sonar was analyzed in a separate EIS/OEIS, use of low-frequency active sonar is not part of the planned training activities considered for the GoA TMAA.

Acoustic Sources Used for ASW Exercises in the GoA TMAA

Modern sonar technology has developed a multitude of sonar sensor and processing systems. In concept, the simplest active sonars emit omni-directional pulses ("pings") and time the arrival of the reflected echoes from the target object to determine range. More sophisticated active sonars emit an omni-directional ping and then rapidly scan a steered receiving beam to provide directional, as well as range, information. More advanced active sonars transmit multiple preformed beams, listening to echoes from several directions simultaneously and providing efficient detection of both direction and range. The types of active sonar and other sound sources employed during training exercises in the GoA TMAA are identified in Table 1.

BILLING CODE 3510–22–P

Sonar Sources	Freq-uency (kHz)	Source Level (dB) re 1 µPa @ 1 m	Emission Spacing (m)*	Vertical Direct-ivity	Horizon-tal Direct-ivity	Associated Platform	System Description	Annual Amount	Unit
AN/SQS-53	3.5	235	154	Omni	240° forward-looking	Cruiser (CG) and Destroyer (DDG) hull mounted sonar	ASW search, detection, & localization (approximately 120 pings per hour)	578	Hours
AN/SQS-56	7.5	225	129	13°	30°	Frigate (FFG) hullmounted sonar	ASW search, detection, & localization (approximately 120 pings per hour)	52	Hours
AN/AQS-13/22	Classifed (MF)	Classified	15	Omni	Omni	Helicopter Dipping sonar	ASW search, detection, & localization (10 pings/dip, 30 seconds between pings), also used to represent AN/AQS-13	192	Hours
AN/BQQ-10	Classifed (MF)	Classified	Classified	Classified	Classified	Submarine hull-mounted sonar	ASW search and attack (approximately one ping per two hours when in use)	48	Hours
BQS-15 or BQQ-24	Classified (HF)	Classified	Classified	Classified	Classified	Submarine hull-mounted sonar	20 pings per hours for 4 hours	24	Hours
AN/SSQ-62 DICASS (sonobuoy, tonal)	8	201	450	Omni	Omni	Helicopter and maritime patrol aircraft (P3 and P8 MPA) dropped sonobuoy	Remotely commanded expendable sonar-equipped buoy (approximately 12 pings per use, 30 secs between pings, 8 buoys per hour)	266	Buoys
MK-48 torpedo sonar	Classified (>10)	Classified	144	Omni	Omni	Submarine (SSN) launched torpedo (used during SINKEX)	Recoverable and non-explosive exercise torpedo; sonar is active approximately 15 min per torpedo run	2	Torpedoes
AN/SSQ-110A (IEER)	Classified (impulsive, broadband)	Classified	n/a	Omni	Omni	MPA deployed	ASW system consists of explosive acoustic source buoy (contains two 5 lb charges) and expendable passive receiver sonobuoy	110	Buoys
AN/SSQ-125 (MAC)	1	Classified	15	Omni	Omni	MPA deployed	AN/SSQ-110A replacement. ASW system consists of active sonobuoy and expendable passive receiver sonobuoy. Phased introduction beginning in 2011.	Included in IEER above	Buoys
MK-84 Range Pingers	12.9 or 37 (rare)	194	Ping dur. 15 msec / ping every 2 sec	90°	Omni	Ships, submarines, weapons, targets, and UUV (8-10 knot platform)	4 pingers max used during a PUTR TRACKEX exercise. Surface ship pingers are at 7 m depth / target or sub pingers at 100 m depth. 8 hours total event duration each during PUTR operational days.	80	Hours
SUS MK-84	Selectable at 3.3 or 3.5	160	Continuous	Omni	Omni	Sonobuoy	Expendable buoy deployed from aircraft and ships used as a signaling device to communicate with submarines. Operating life of 70 seconds.	24	Buoys
PUTR Transponder	8.8 or 40	186 or 190	n/a		180 upward looking	Portable Undersea Tracking Range, deployed on ocean floor	2 pingers used 8 hrs per event. One ping every 2 seconds.	80	Hours

Table 1. Active sonar sources in the GOA and parameters used for modeling them. Many of the actual parameters and capabilities of these sonars are classified. Parameters used for modeling were derived to be as representative as possible. When, however, there were a wide range of potential modeling values, a nominal parameter likely to result in the most impact was used so that the model would err towards overestimation.

*Spacing means distance between pings at the nominal speed

CG – Guided Missile Cruiser; DDG – Guided Missile Destroyer; DICASS – Directional Command-Activated Sonobuoy System; FFG – Fast Frigate; HF – High-Frequency; MF – Mid-Frequency; MPA - Maritime Patrol Aircraft; UUV - Unmanned Underwater Vehicle.

BILLING CODE 3510–22–C

ASW sonar systems are deployed from certain classes of surface ships, submarines, helicopters, and fixed-wing maritime patrol aircraft (MPA).

Maritime patrol aircraft is a category of fixed-wing aircraft that includes the current P–3C Orion, and the future P–8 Poseidon multimission maritime aircraft. The surface ships used are typically equipped with hull-mounted sonars (passive and active) for the detection of submarines. During an exercise, fixed-wing MPA may be used to deploy both active and passive sonobuoys to assist in locating and tracking submarines or ASW targets. Helicopters may also be used during an exercise to deploy both active and passive sonobuoys to assist in locating and tracking submarines or ASW targets, and to deploy dipping sonar. Submarines are equipped with both passive and active sonar sensors that may be used to locate and prosecute other submarines and/or surface ships during the exercise. The platforms and systems used in ASW exercises are identified below.

Surface Ship Sonar—A variety of surface ships participate in training events, including the Fast Frigate (FFG), the Guided Missile Destroyer (DDG), and the Guided Missile Cruiser (CG). These three classes of ships are equipped with active as well as passive tactical sonar for mine avoidance and submarine detection and tracking. DDG and CG class ships are equipped with the AN/SQS–53 sonar system (the most powerful system), with a nominal source level of 235 decibels (dB) re 1 μPa @ 1 m. The FFG class ship uses the SQS–56 sonar system, with a nominal source level of 225 decibels (dB) re 1 μPa @ 1 m. Sonar ping transmission durations were modeled as lasting 1 second per ping and omni-directional, which is a conservative assumption that will overestimate potential effects because actual ping durations will be less than 1 second. The AN/SQS–53 hull-mounted sonar transmits at a center frequency of 3.5 kHz. The SQS–56 transmits at a center frequency of 7.5 kHz. Details concerning the tactical use of specific frequencies and the repetition rate for the sonar pings are classified but were modeled based on the required tactical training setting.

Submarine Sonars—Submarines use sonar (*e.g.,* AN/BQQ–10) to detect and target enemy submarines and surface ships. Because submarine active sonar use is very rare and in those rare instances, very brief, it is extremely unlikely that use of active sonar by submarines would have any measurable effect on marine mammals. In addition, submarines use high-frequency sonar (AN/BQS–15 or BQQ–24) for navigation safety, mine avoidance, and a fathometer that is not unlike a standard fathometer in source level or output. There is, at present, no mine training range in the GoA TMAA. Therefore, given their limited use and rapid attenuation as high frequency sources, the AN/BQS–15 and BQQ–24 are not expected to result in the take of marine mammals.

Aircraft Sonar Systems—Aircraft sonar systems that would operate in the GoA TMAA include sonobuoys from fixed and rotary-wing aircraft and dipping sonar from helicopters. Sonobuoys may be deployed by maritime patrol aircraft or helicopters; dipping sonars are used by carrier-based helicopters. A sonobuoy is an expendable device used by aircraft for the detection of underwater acoustic energy and for conducting vertical water column temperature measurements. Most sonobuoys are passive, but some can also generate active acoustic signals. Dipping sonar is an active or passive sonar device lowered by cable from helicopters to detect or maintain contact with underwater targets. During ASW training, these systems' active modes are only used briefly for localization of contacts and are not used in primary search capacity. Helicopters and MPA (P–3 or P–8 in approximately 2013) may deploy sonobuoys in the GoA TMAA during ASW training exercises.

Extended Echo Ranging/Improved Extended Echo Ranging (EER/IEER) Systems—EER/IEER are airborne ASW systems used to conduct "large area" searches for submarines. These systems are made up of airborne avionics ASW acoustic processing and sonobuoy types that are deployed in pairs. The EER/IEER system's active sonobuoy has two components: An AN/SSQ–110A Sonobuoy, which generates an explosive sound impulse; and a passive receiver sonobuoy (SSQ–77), which "listens" for the return echo that has been bounced off the surface of a submarine. These sonobuoys are designed to provide underwater acoustic data necessary for naval aircrews to quickly and accurately detect submerged submarines. The sonobuoy pairs are dropped from a maritime patrol aircraft into the ocean in a predetermined pattern with a few buoys covering a very large area. The AN/SSQ–110A Sonobuoy Series is an expendable and commandable sonobuoy. In other words, the equipment is not retrieved after deployment and, once deployed, it can be remotely controlled. For example, upon command from the aircraft, the explosive charge would detonate, creating the sound impulse. Within the sonobuoy pattern, only one detonation is commanded at a time. Sixteen to twenty SSQ–110A source sonobuoys may be used in a typical exercise. Both charges of each sonobuoy would be detonated independently during the course of the training. The first detonation would be for tactical reasons—to locate the submarine; and the second occurs when the sonobuoy is commanded to scuttle at the conclusion of the exercise. The AN/SSQ–110A is listed in Table 1 because it functions like a sonar ping; however, the source creates an explosive detonation and its effects are considered in the underwater explosive section.

Multistatic Active Coherent (MAC) system–Formerly referred to as the Advanced Extended Echo Ranging (AEER) system, the proposed SSQ–125 MAC sonobuoy system is operationally similar to the existing EER/IEER system. The MAC system will use the same Air Deployed Active Receiver (ADAR) sonobuoy (SSQ–101A) as the acoustic receiver and will be used for a large area ASW search capability in both shallow and deep water. However, instead of using an explosive AN/SSQ–110A as an impulsive source for the active acoustic wave, the MAC system will use a battery powered (electronic) source for the AN/SSQ 125 sonobuoy. The output and operational parameters for the AN/SSQ–125 sonobuoy (source levels, frequency, wave forms, etc.) are classified. However, this sonobuoy is intended to replace the EER/IEER's use of explosives and is scheduled to enter the fleet in 2011. For purposes of analysis, replacement of the EER/IEER system by the MAC system will be assumed to occur at 25 percent per year as follows: 2011—25 percent replacement; 2012—50 percent replacement; 2013—75 percent replacement; 2014—100 percent replacement with no further use of the EER/IEER system beginning in 2015 and beyond.

Torpedoes—Torpedoes are the primary ASW weapon used by surface ships, aircraft, and submarines. The guidance systems of these weapons can be autonomous or electronically controlled from the launching platform through an attached wire. The autonomous guidance systems are acoustically based. They operate either passively, exploiting the emitted sound energy by the target, or actively, ensonifying the target and using the received echoes for guidance. With the exception of SINKEX, torpedoes will not be used in the GoA TMAA during the proposed training activities.

Portable Undersea Tracking Range (PUTR)—The PUTR is a self-contained, portable, undersea tracking capability that employs modern technologies to support coordinated undersea warfare training in numerous locations. The system tracks submarines, surface ships,

weapons, targets, and unmanned undersea vehicles and then distributes the data to a data processing and display system, either aboard ship or at a shore site. The PUTR may be deployed to support ASW or other training in the GoA TMAA. The PUTR would temporarily place hydrophones on the seafloor in areas 25–100 nm^2 (46.3–185.2 km^2) or smaller and provide high-fidelity feedback and scoring of crew performance during ASW training activities. No on-shore construction would take place. Seven electronics packages, each approximately 3 ft (0.9 m) long by 2 ft (0.6 m) in diameter, would be temporarily installed on the seafloor by a range boat. The anchors used to keep the electronics packages on the seafloor consist of either concrete or sand bags, each of which are approximately 1.5 ft-by-1.5 ft (0.45 m-by-0.45 m) and 300 pounds (136 kilograms). PUTR equipment can be recovered for maintenance or when training is completed. Two separate sound sources are associated with the operation of the PUTR:

Range tracking pingers—Range tracking pingers would be used on ships, submarines, and ASW targets when training is conducted on the PUTR. A typical MK 84 range tracking pinger generates a 12.93 kHz sine wave in pulses with a maximum duty cycle of 30 milliseconds and has a design power of 194 dB re 1 micro-Pascal at 1 meter. Ping rate is selectable and typically one pulse every two seconds. Under the proposed action, up to four range pingers would operate simultaneously for 4 hours each of the 20 PUTR operating days per year. Total time operated would be 80 hours annually.

Transponders—Each transponder package consists of a hydrophone that receives pinger signals, and a transducer that sends an acoustic "uplink" of locating data to the range boat. The uplink signal is transmitted at 8.8 kHz, 17 kHz, or 40 kHz, at a source level of 190 dB at 40 kHz, and 186 dB at 8.8 kHz. The uplink frequency is selectable and typically uses the 40 kHz signal, however the lower frequency may be used when PUTR is deployed in deep waters where conditions may not permit the 40 kHz signal to establish and maintain the uplink. The PUTR system also incorporates an emergency underwater voice capability that transmits at 8–11 kHz and a source level of 190 dB. Under the proposed action, the uplink transmitters would operate 20 days per year, for 4 hours each day of use. Total time operated would be 80 hours annually.

Training Targets—ASW training targets are used to simulate opposition submarines. They are equipped with one or a combination of the following devices: (1) Acoustic projectors emanating sounds to simulate submarine acoustic signatures; (2) echo repeaters to simulate the characteristics of the echo of a particular sonar signal reflected from a specific type of submarine; and (3) magnetic sources to trigger magnetic detectors. Two ASW training target types may be used in the TMAA: The MK–30, which is recovered after each use and the MK–39 Expendable Mobile ASW Training Target (EMATT), which is not recovered. Under the proposed action, approximately 12 EMATTs may be expended annually during training in the TMAA. A small percentage of these EMATTS may be replaced by the more costly yet recoverable MK–30.

As described above, ASW training exercises are the primary type of exercises that utilize MFAS and HFAS sources in the GoA TMAA. Unit level tracking and torpedo ASW exercises may occur over the course of several days during the proposed training period in the GoA TMAA. Under the Navy's preferred alternative, in a single year the GoA TMAA may have two exercises lasting up to 21 days, both of which may involve one ASW unit (aircraft, ship, or submarine) versus one target (usually a MK–39 EMATT or live submarine). ASW exercise descriptions are included below and summarized (along with the exercises utilizing explosives) in Table 2.

ASW Tracking Exercise (TRACKEX)—Generally, TRACKEXs train aircraft, ship, and submarine crews in tactics, techniques, and procedures for search, detection, localization, and tracking of submarines with the goal of determining a firing solution that could be used to launch a torpedo and destroy the submarine. Use of torpedoes is not a proposed activity in the TMAA, with the exception of SINKEX. ASW Tracking Exercises occur during both day and night. A typical unit-level exercise involves one (1) ASW unit (aircraft, ship, or submarine) versus one (1) target—either a MK–39 (EMATT), or a live submarine. The target may be non-evading while operating on a specified track or fully evasive. Participating units use active and passive sensors, including hull-mounted sonar, towed arrays, dipping sonar, variable-depth sonar, and sonobuoys for tracking.

ASW training activities will take place during the summer months, in the form of one or two major exercises or focused activity periods. These exercises or activity periods would each last up to 21 days and consist of multiple component training activities. Unlike Navy Training activities in other areas, the GOA TMAA is not a Range Complex and as such, there are no other or ongoing small scale Navy Training activities conducted outside these activity periods. Descriptions of each ASW tracking exercise type are provided below.

Helicopter ASW TRACKEX

A helicopter ASW TRACKEX typically involves one or two MH–60R helicopters using both passive and active sonar for tracking submarine targets. For passive tracking, the MH–60R may deploy patterns of passive sonobuoys to receive underwater acoustic signals, providing the helicopter crew with locating information on the target. Active sonobuoys may also be used. An active sonobuoy, as in any active sonar system, emits an acoustic pulse that travels through the water, returning echoes if any objects, such as a submarine, are within the range of acoustic detection. For active sonar tracking, the MH–60R crew will rely primarily on its AQS–22 Dipping Sonar. The sonar is lowered into the ocean while the helicopter hovers within 50 ft (15m) of the surface. Similar to the active sonobuoy, the dipping sonar emits acoustic energy and receives any returning echoes, indicating the presence of an underwater object. Use of dipping sonar has the potential to disturb a marine mammal or marine mammal stock resulting in MMPA Level B harassment as defined for military readiness activities.

The target for this exercise is either an EMATT or live submarine which may be either nonevading and assigned to a specified track or fully evasive depending on the state of training of the helicopter crew. A Helicopter TRACKEX usually takes 2 to 4 hours. No torpedoes are fired during this exercise. A total of 192 AQS–22 "dips" annually were analyzed for potential acoustic impacts under the proposed training activities.

MPA[1] *ASW TRACKEX*

During these exercises, a typical scenario involves a single MPA dropping sonobuoys, from an altitude below 3,000 ft (914 m), into specific patterns designed for both the anticipated threat submarine and the specific water conditions. These patterns vary in size and coverage area based on anticipated threat and water

[1] MPA currently refers to the P–3C Orion aircraft. The P–8 Multi-Mission Maritime Aircraft is scheduled to replace the P–3C as the Navy's MPA.

conditions. Typically, passive sonobuoys will be used first, so the threat submarine is not alerted. Active sonobuoys will be used as required either to locate extremely quiet submarines or to further localize and track submarines previously detected by passive buoys. Use of sonobuoys has the potential to disturb a marine mammal or marine mammal stock resulting in MMPA Level B harassment as defined for military readiness activities.

The MPA will typically operate below 3,000 ft (914 m) to drop sonobuoys, will sometimes be as low as 400 ft (122 m), then may climb to several thousand feet after the buoy pattern is deployed. The higher altitude allows monitoring of the buoys over a much larger search pattern area. The target for this exercise is either an EMATT or live submarine, which may be either non-evading and assigned to a specified track or fully evasive depending on the state of training of the MPA. An MPA TRACKEX usually takes 2 to 4 hours. The annual use of a total of 266 DICASS sonobuoys was analyzed for potential acoustic impacts under the proposed training activities.

EER/IEER ASW Training Exercises

This is an at-sea flying exercise designed to train MPA crews in the deployment and use of the EER/IEER sonobuoy systems. This system uses the SSQ–110A as the signal source and the SSQ–77 as the receiver buoy. This activity differs from the MPA ASW TRACKEX in that the SSQ–110A sonobuoy uses two explosive charges per buoy for the acoustic source. Other active sonobuoys use an electrically generated "ping." Use of explosive sonobuoys has the potential to disturb a marine mammal or marine mammal stock resulting in MMPA Level B harassment as defined for military readiness activities.

A typical EER/IEER exercise lasts approximately 6 hours. The aircrew will first deploy 16 to 20 SSQ–110A sonobuoys and 16 to 20 passive sonobuoys in 1 hour. For the next 5 hours, the sonobuoy charges will be detonated, while the EER/IEER system analyzes the returns for evidence of a submarine. This exercise may or may not include a practice target. For potential acoustic impacts, the annual deployments of 40 SSQ–110 (two explosions per buoy) sonobuoys were analyzed under the proposed training activities.

In the future, the SSQ–125 MAC sonobuoy will be deployed in the GoA TMAA as a replacement for the SSQ–110 in EER/IEER exercises.

ASW TRACKEX (Surface Ship)

Surface ships operating in the GoA TMAA would use hull-mounted active sonar to conduct ASW Tracking exercises. Typically, this exercise would involve the coordinated use of other ASW assets, to include MPA, helicopters, and other ships. A total of 578 hours of SQS–53 and 52 hours of SQS–56 sonar annually were analyzed for potential acoustic impacts under the proposed training activities. Acoustic cumulative and synergistic effects are incorporated into the modeling as detailed in Appendix B of the Navy's LOA application (see **SUPPLEMENTARY INFORMATION** section for information on obtaining copies of supporting documents). Use of active sonar by surface ships for ASW has the potential to disturb a marine mammal or marine mammal stock resulting in MMPA Level B harassment as defined for military readiness activities.

ASW or Anti-Surface Warfare (ASUW) (Submarine)

During these exercises, submarines use passive sonar sensors to search, detect, classify, localize, and track the threat submarine with the goal of developing a firing solution that could be used to launch a torpedo and destroy the threat submarine. However, no torpedoes are fired during this exercise. Submarines also use their high-frequency sonar for object avoidance and navigation safety. Sonar use by submarines has the potential to disturb a marine mammal or marine mammal stock resulting in MMPA Level B harassment as defined for military readiness activities.

BILLING CODE 3510–22–P

EXERCISE TYPE	SINKEX	EER/IEER/MAC	RANGE OPERATIONS (PUTR)	BOMBEX [A-S]	GUNEX [A-S, S–S, S-A]	MISSILEX [A-A, S-A]	ASW Helicopter or MPA	ASW Surface	ASW Submarine
Sources / Weapons / Rounds	MK-48 MK-82 (Inert/HE) MK-83 (HE) AGM-88 HARM AGM-84 Harpoon AGM-65 Maverick AGM-114 Hellfire AGM-119 Penguin Standard Missile 1 Standard Missile 2 5”/54 BLP (Inert)	SSQ-110A (5 lb NEW) SSQ-125	MK-84 pingers	MK 82/83/84 BDU-45	5” (Inert/HE) 76mm (Inert/HE 57mm (Inert) 25mm (Inert) 20mm (Inert) 7.62mm (inert) .50 cal (inert)	Standard missle Sea Sparrow RAM AIM-7/9/120	AN/SSQ-62 DICASS AN/ASQ-22	AN/SQS-53 MFA Sonar AN/SQS-56 MFA Sonar MK-39 EMATT	BQQ-10 Submarine Sonar BQS-15 Submarine sonar SUS MK-84 Sonobuoy
Explosion in or on water	Yes	Yes - SSQ-110A No - SSQ-125	No	Yes	Yes	No	No	No	No
Length of Exercise	4-8 hrs over 2 days	6 hrs	4 hrs	1 hr	2-3 hrs	1 hr	2-4hrs	5-7 days	2-3 days
Detonations / hours/ rounds / sonobuoy or torpedo deployments, or helicopter sonar dips per exercise or year	MK-82 (Inert) = 3 MK-82 (HE) = 7 MK-83 (HE) = 4 AGM-88 HARM = 2 AGM-84 Harpoon = 5 AGM-65 Maverick = 3 AGM-114 Hellfire = 1 AGM-119 Penguin = 1 Standard Missile 1 = 1 Standard Missile 2 = 1 5”/54 BLP = 500 rounds	80 deploy/yr	MK-84 pingers = 80hrs	MK-82 (HE) = 128 MK-83 (HE) = 12 MK-84 = 4 (1 HE) BDU-45 (inert) = 216	5” (Inert) = 48 5” (HE) = 84 76mm (Inert) = 16 76mm (HE) = 28 57mm (Inert) = 200 25mm (Inert) = 6,000 20mm (Inert) = 20,000 7.62mm (inert) = 9,000 .50 cal (inert) = 2,400	**S-A** Standard missle, Sea Sparrow, RAM = 6 **A-A** AIM-7 = 18 AIM-9 = 24 AIM-120 = 18	AN/SSQ-62 DICASS AN/ASQ-22 = 192	AN/SQS-53 = 578hrs AN/SQS-56 = 52 MK-39 EMATT = 12hrs	BQQ-10 = 48hrs BQS-15 =24hrs SUS MK-84 = 24
Number Exercises per Year	2	4	20	36	32	6	44	3	3
Area Used	TMAA	TMAA	TMAA	TMAA	TMAA	TMAA	TMAA	TMAA	TMAA
Months of Yr	April - October	April - October	April - October	April - October	April - October	April - October	April - October	April - October	April - October

Table 2. Summary of Navy training activities in GoA TMAA and associated componets.

BILLING CODE 3510–22–C

Activities Utilizing Underwater Detonations

Underwater detonation activities can occur at various depths. They may include activities with detonations at or just below the surface (such as SINKEX or gunnery exercises (GUNEX)). When the weapons hit the target, there is no explosion in the water, and so a "hit" is not modeled (*i.e.,* the energy (either acoustic or pressure) from the hit is not expected to reach levels that would result in take of marine mammals). When a live weapon misses, it is modeled to explode below the water surface at 1 ft (5-inch naval gunfire, 76-mm rounds), 2 meters (Maverick, Harpoon, MK–82, MK–83, MK–84), or 50 ft (MK–48 torpedo) as shown in Appendix A of the Navy's application (the depth is chosen to represent the worst case of the possible scenarios as related to potential marine mammals impacts). Exercises may utilize either live or inert ordnance of the types listed in Table 2. Additionally, successful hit rates are known to the Navy and are utilized in the effects modeling. Training events that involve explosives and underwater detonations are described below and summarized in Table 3.

TABLE 3—SOURCES OF AT-SEA EXPLOSIVES USED IN GOA TMAA FOR WHICH TAKE OF MARINE MAMMALS IS ANTICIPATED

Ordnance/explosive	Net explosive weight (in lbs.)	Sub-TTS	TTS	Injury	Mortality	Exclusion zone Used (m)
		177dB	182 SEL/23psi	50% TM rupture, 205db or 23 psi-ms	Onset massive lung injury or 31 psi-ms	
5″ Naval gunfire	9.54	413	227/269	43	23	549
76 mm Rounds	1.6	168	95/150	19	13	549
MK–82	238	2720	1584/809	302	153	914
MK–83	574	4056	2374/1102	468	195	914
MK–84	945	5196	3050/1327	611	226	914
SSQ–110 IEER	5	NA	325/271	155	76	914
MK–48	851	NA	2588/1198	762	442	1852

Table Also Indicates Range to Indicated Threshold and Size of Navy Exclusion Zone Used in Mitigation. Units Are Meters.

Sinking Exercise (SINKEX)—In a SINKEX, a specially prepared, deactivated vessel is deliberately sunk using multiple weapons systems. The exercise provides training to ship and aircraft crews in delivering both live and inert ordnance on a real target. These target vessels are empty, cleaned, and environmentally-remediated ship hulks. A SINKEX target is towed to sea and set adrift at the SINKEX location. The duration of a SINKEX is unpredictable since it ends when the target sinks, sometimes immediately after the first weapon impact and sometimes only after multiple impacts by a variety of weapons. Typically, the exercise lasts for 4 to 8 hours over 1 to 2 days. The Navy proposes to conduct one SINKEX during each summertime exercise in the GoA TMAA (maximum of two). Potential harassment would be from underwater detonation. SINKEX events have been conducted in the Pacific at Navy training range complexes off Southern California, the Pacific Northwest, Hawaii, and the Mariana Islands, in compliance with 40 CFR 229.2.

The Environmental Protection Agency (EPA) grants the Navy a general permit through the Marine Protection, Research, and Sanctuaries Act to transport vessels "for the purpose of sinking such vessels in ocean waters * * *" (40 CFR 229.2). Subparagraph (a)(3) of this regulation states "All such vessel sinkings shall be conducted in water at least 1,000 fathoms (6,000 feet) deep and at least 50 nautical miles from land."

SINKEX events typically include at least one surface combatant (frigate, destroyer, or cruiser); one submarine; and numerous fixed-wing and rotary-wing aircraft. One surface ship will serve as a surveillance platform to ensure the hulk does not pose a hazard to navigation prior to and during the SINKEX. The weapons actually expended during a SINKEX can vary greatly. Table 1–7 in the Navy's application indicates the typical ordnance that may be used in a SINKEX, which may include missiles, bombs, 5" gunfire, and a single MK–48 torpedo. This table reflects the planning for weapons, which may be expended during one SINKEX in the GoA TMAA. This level of ordnance is expected for each of the two possible SINKEX events in the GoA TMAA. With the exception of the single torpedo, which is designed to explode below the target hulk in the water column, the weapons deployed during a SINKEX are intended to strike the target hulk, and thus not explode within the water column.

Surface-to-Surface Gunnery Exercise (S–S GUNEX)—These exercises train surface ship crews in high-speed surface engagement procedures against mobile (towed or self-propelled) seaborne targets. Both live and inert training rounds are used against the targets. The training consists of the pre-attack phase, including locating, identifying, and tracking the threat vessel, and the attack phase in which the missile is launched and flies to the target. In a live-fire event, aircraft conduct a surveillance flight to ensure that the range is clear of nonparticipating ships. These activities may occur within the GoA TMAA and have the potential to disturb a marine mammal or marine mammal stock resulting in MMPA Level B harassment as defined for military readiness activities.

For S–S GUNEX from a Navy ship, gun crews engage surface targets at sea with their main battery 5-inch and 76mm guns as well as smaller surface targets with 25mm, 0.50-caliber (cal), or 7.62mm machine guns, with the goal of disabling or destroying the threat target. For a surface-to-surface GUNEX from a Navy small boat, the weapon used is typically a 0.50 cal, 7.62-mm, or 40-mm machine gun.

The number of rounds fired depends on the weapon used for S–S GUNEX. For 0.50-cal, 7.62-mm, or 40-mm ordnance, the number of rounds is approximately 200, 800, and 10 rounds, respectively. For the ship main battery guns, the gun crews typically fire approximately 60 rounds of 5-inch or 76-mm ordnance during one exercise. These activities may occur within the GoA TMAA.

Air-to-Surface Gunnery Exercise (A–S GUNEX)—Strike fighter aircraft and helicopter crews, including embarked

Naval Special Warfare (NSW) personnel use guns to attack surface maritime targets, day or night, with the goal of destroying or disabling enemy ships, boats, or floating or near-surface mines. These training activities have the potential to disturb a marine mammal or marine mammal stock resulting in MMPA Level B harassment as defined for military readiness activities.

For fixed-wing A–S GUNEX, a flight of two F/A–18 aircraft will begin a descent to the target from an altitude of about 3,000 ft (914 m) while still several miles away. Within a distance of 4,000 ft (1,219 m) from the target, each aircraft will fire a burst of about 30 rounds before reaching an altitude of 1,000 ft (305 m), then break off and reposition for another strafing run until each aircraft expends its exercise ordnance allowance of about 250 rounds from its 20mm cannon.

For rotary-wing A–S GUNEX, a single helicopter will carry several air crewmen needing gunnery training and fly at an altitude between 50 and 100 ft (15 to 30 m) in a 300-ft (91-m) racetrack pattern around an at-sea target. Each gunner will expend about 200 rounds of 0.50 cal and 800 rounds of 7.62-mm ordnance in each exercise. The target is normally a noninstrumented floating object such as an expendable smoke float, steel drum, or cardboard box, but may be a remote-controlled speed boat or jet ski type target. The exercise lasts about 1 hour and occurs within the GoA TMAA.

Air-to-Surface Missile Exercise (A–S MISSILEX)—An air-to-surface MISSILEX involves fixed-winged aircraft and helicopter crews launching missiles at surface maritime targets, day and night, with the goal of training to destroy or disable enemy ships or boats. These activities may occur within the TMAA; however, all missile launches would be simulated; therefore, MISSILEX activities are not likely to disturb a marine mammal or marine mammal stock resulting in MMPA Level B harassment as defined for military readiness activities.

For helicopter A–S MISSILEX, one or two MH–60R/S helicopters approach and acquire an at-sea surface target, which is then designated with a laser to guide an AGM–114 Hellfire missile to the target. The laser designator may be onboard the helicopter firing the hellfire, another helicopter, or another source. The helicopter simulates launching a missile from an altitude of about 300 ft (91 m) against a specially prepared target with an expendable target area on a nonexpendable platform. The platform fitted with the expendable target could be a stationary barge, a remote-controlled speed boat, or a jet ski towing a trimaran whose infrared signature has been augmented with a heat source (charcoal or propane) to better represent a typical threat vessel. All missile firings would be simulated.

For an air-to-surface MISSILEX fired from fixed-wing aircraft, the simulated missile used is typically an AGM–84 Standoff Land Attack Missile-Expanded Response (SLAM–ER), an AGM–84 Harpoon, or an AGM–65 Maverick. A flight of one or two aircraft approach an at-sea surface target from an altitude between 40,000 ft (12,192 m) and 25,000 ft (7,620 m) for SLAM–ER or Harpoon, and between 25,000 ft (7,620 m) and 5,000 ft (1,524 m) for Maverick, complete the internal targeting process, and simulate launching the weapon at the target from beyond 150 nm (278 km) for SLAM–ER and from beyond 12 nm (22 km) for Maverick. The majority of unit level exercises involve the use of captive carry (inert, no release) training missiles; the aircraft perform all detection, tracking, and targeting requirements without actually releasing a missile. These activities may occur within the GoA TMAA and all missile launches would be simulated.

Air-to-Surface Bombing Exercise (BOMBEX)—During an air-to-surface BOMBEX, maritime patrol aircraft (MPA) or F/A–18 deliver free-fall bombs against surface maritime targets, with the goal of destroying or disabling enemy ships or boats.

A flight of one or two aircraft will approach the target from an altitude of 15,000 ft (4,570 m) to less than 3,000 ft (914 m) while adhering to designated ingress and egress routes. Typical bomb release altitude is below 3,000 ft (914 m) and within a range of 1,000 yards (yd) (914 m) for unguided munitions, and above 15,000 ft (4,572 m) and in excess of 10 nm (18 km) for precision-guided munitions. Exercises at night will normally be done with captive carry (no drop) weapons because of safety considerations. Laser designators from aircraft releasing ordnance or a support aircraft are used to illuminate certified targets for use with lasers when using laser guided weapons. Bombs used could include BDU–45 (inert) or MK–82/83/84 (live and inert). These activities may occur within the GoA TMAA and have the potential to disturb a marine mammal or marine mammal stock resulting in MMPA Level B harassment as defined for military readiness activities. In the near future, the Navy will be transitioning all carrier based MK–80 series bombs to BLU 110, 111, and 117 live and inert bombs. The difference is that the BLU-series bombs contain insensitive (less likely to accidently explode) high explosives, which make them safer for carrier-based operations. All other attributes would remain the same.

EER–IEER AN/SSQ–110A—The Extended Echo Ranging and Improved Extended Echo Ranging (EER/IEER) systems are airborne ASW systems used in conducting "large area" searches for submarines. These systems are made up of airborne avionics ASW acoustic processing and sonobuoy types that are deployed in pairs. The IEER system's active sonobuoy has two components: An AN/SSQ–110A Sonobuoy, which generates a sound similar to a "sonar ping" using a small explosive; and a passive AN/SSQ–77 Sonobuoy, which "listens" for the return echo of the "sonar ping" that has been bounced off the surface of a submarine. These sonobuoys are designed to provide underwater acoustic data necessary for naval aircrews to quickly and accurately detect submerged submarines. The sonobuoy pairs are dropped from a fixed-wing aircraft into the ocean in a predetermined pattern with a few buoys covering a very large area. The AN/SSQ–110A Sonobuoy Series is an expendable and commandable sonobuoy. Upon command from the aircraft, the bottom payload is released to sink to a designated operating depth. A second command is required from the aircraft to cause the second payload to release and detonate the explosive to generate a "ping." There is only one detonation in the pattern of buoys at a time. Potential harassment would be from underwater detonations.

The MAC system (described in the sonar source section) will eventually replace the EER/IEER system and was analyzed for this proposed rule.

Vessel Movement

Many of the proposed activities within the GoA TMAA involve maneuvers by various types of surface ships, boats, and submarines (collectively referred to as vessels). According to the Navy's application, up to seven Navy vessels (six surface ships and one submarine) may be operating within the GoA TMAA. In addition, the Navy's DEIS stated that under the preferred alternative (Alternative 2) 19 contracted support vessels may also be operating within the GoA TMAA. Within the maximum two summer exercises, the length of the exercise, the number of vessels, and the allotted at-sea time within the GoA TMAA during an exercise will be variable between years. These variations cannot be predicted given unknowns including the availability of participants for the

annual exercise(s), which is a direct result of factors such as Navy responses to real-world events (*e.g.,* tactical deployments, disaster relief, humanitarian assistance, etc.), planned and unplanned deployments, vessel availability due to funding and maintenance cycles, and logistic concerns with conducting an exercise in the GoA.

Vessel movements have the potential to affect marine mammals by directly striking or disturbing individual animals. The probability of vessel and marine mammal interactions occurring in the GoA TMAA is dependent on several factors including numbers, types, and speeds of vessels; the regularity, duration, and spatial extent of activities; the presence/absence and density of marine mammals; and protective measures implemented by the Navy. During training activities, speeds vary and depend on the specific training activity. In general, Navy vessels move in a coordinated manner, but can be separated by many miles in distance. These activities are widely dispersed throughout the GoA TMAA, which is a vast area encompassing 42,146 nm^2 (145,458 km^2). Consequently, the density of Navy vessels within the GoA TMAA at any given time is extremely low.

Additional information on the Navy's proposed activities may be found in the LOA Application and the Navy's GoA TMAA DEIS.

Description of Marine Mammals in the Area of the Specified Activities

Twenty-six marine mammal species or populations/stocks have confirmed or possible occurrence within or adjacent to the GoA, including seven species of baleen whales (mysticetes), 13 species of toothed whales (odontocetes), five species of seals (pinnipeds), and the sea otter (mustelid). Nine of these species are ESA-listed and considered depleted under the MMPA: Blue whale, fin whale, humpback whale, sei whale, sperm whale, North Pacific right whale, Cook Inlet beluga whale, Steller sea lion, and sea otter. Table 4 summarizes their abundance, Endangered Species Act (ESA) status, occurrence, density, and likely occurrence in the TMAA during the April to October timeframe. The sea otter is managed by the U.S. Fish and Wildlife Service and will not be addressed further here.

BILLING CODE 3510–22–P

Common Name	Species Name	ESA/ MMPA Status	Occurrence Apr-Dec	Abundance	Density* /km^2
Mysticetes					
Blue whale	*Balaenoptera musculus*	E, D, S	Rare	1,368	NA
Fin whale	*Balaenoptera physalus*	E, D, S	Common	2,636	0.01
Sei whale	*Balaenoptera borealis*	E, D, S	Rare	43	NA
Minke whale	*Balaenoptera acutorostrata*		Rare	Unknown	0.0006
Humpback whale	*Megaptera novaeangliae*	E, D, S	Common	4,005	0.0019
Gray whale	*Eschrichtius robustus*		Common	18,813	0.0125
North Pacific right whale	*Eubalaena japonica*	E, D, S	Rare	Unknown (<100)	NA
Odontocetes					
Sperm whale	*Physeter macrocephalus*	E, D, S	Rare	Unknown	0.0003
Baird's beaked whale	*Berardius bairdii*		Rare	Unknown	0.0005
Cook Inlet beluga whale	*Delphinaptera leucas*	E, D, S	Extra-limital	375	NA
Cuvier's beaked whale	*Ziphius cavirostris*		Common	Unknown	0.0022
Dall's porpoise	*Phocoenoides dalii*		Common	83,400	0.1892
False killer whale	*Pseudorca crassidens*		Extra-limital	Unknown	NA
Killer whale (multiple stocks)	*Orcinus orca*		Common	249-1,123	0.01
Pacific white-sided dolphin	*Lagenorhynchus obliguidens*		Common	26,880	0.0208
Risso's dolphin	*Grampus griseus*		Extra-limital	11,621	NA
Short-finned pilot whale	*Globicephala macrorhynchus*		Extra-limital	245	NA
Harbor porpoise	*Phocoena phocoena*		Rare	41,854	NA
Northern right whale dolphin	*Lissodelphis borealis*		Extra-limital	12,876	NA
Stejneger's beaked whale	*Mesoplodon stejnegeri*		Common	Unknown	.0022**
Pinniped					
Stellar sea lion (eastern stock)	*Eumetopias jubatus*	T, D, S	Common	45,095-55,832	0.0098
Stellar sea lion (western stock)	*Eumetopias jubatus*	E, D, S	Common	38,988	0.0098
California sea lion	*Zalophus californianus*		Rare	238,000	NA
Harbor seal	*Phoca vitulina richardii*		Rare	45,975	NA
Northern elephant seal	*Mirounga angustirostris*		Common	124,000	0.0022
Northern fur seal	*Callorhinus ursinus*	D, S	Common	665,500	0.118
Mustelid					
Sea otter	*Enhydra lutris*	T, S	Extra-limital	Unknown	NA

Table 4. Marine Mammals of known or possible occurrence in GOA. Table includes status, ocurrence, and density.

* Density derived for summer (appendix B)

** Cuvier's beaked whale density used as surrogate

BILLING CODE 3510–22–C

Species Not Considered Further

Cook Inlet Beluga Whale—The likelihood of a Cook Inlet beluga whale (*Delphinapterus leucas*) occurring in the TMAA is extremely low. Only 28 sightings of beluga whales in the GoA have been reported from 1936 to 2000 (Laidre *et al.,* 2000). The nearest beluga whales to the TMAA are in Cook Inlet with a 2008 abundance estimate of 375 whales in the Cook Inlet stock (NMFS 2008). In October 2008, the Cook Inlet beluga whale distinct population segment was listed as endangered under the ESA (73 FR 62919, October 22, 2008). Prior to listing, the population had been designated as depleted under the MMPA (NMFS, 2008). Cook Inlet is approximately 70 nm (129.6 km) from the nearest edge of the TMAA and the Cook Inlet beluga whales do not leave the waters of Cook Inlet (NMFS, 2007, 2008). Based on this information, it is highly unlikely for a Cook Inlet beluga whale to be present in the action area. Consequently, this distinct population segment will not be considered in the remainder of this analysis.

False Killer Whale—The likelihood of a false killer whale (*Pseudorca crassidens*) being present in the TMAA is extremely low. False killer whales are found in tropical and temperate waters, generally between 50° S and 50° N latitude (Baird *et al.,* 1989; Odell and McClune, 1999). The southernmost point boundary of the TMAA is well north of 55° N latitude. There have been records of false killer whale sightings as far north as the Aleutian Islands and Prince William Sound in the past (Leatherwood *et al.,* 1988). In addition, a false killer whale was sighted in May 2003 near Juneau, but this was considered to be far north of its normal range (DoN, 2006). There are no abundance estimates available for this

species in the NMFS stock assessment report for this area of the Pacific. In summary, false killer whales are considered extralimital to the TMAA and will not be considered further in this analysis.

Northern Right Whale Dolphin—The likelihood of a northern right whale dolphin (*Lissodelphis borealis*) occurring in the TMAA is extremely low. This species occurs in North Pacific oceanic waters and along the outer continental shelf and slope in cool temperate waters colder than 20° C. This species is distributed approximately from 30° N to 55° N and 145° W to 118° E (both south and east of the TMAA). There are two records of northern right whale dolphins in the GoA (one just south of Kodiak Island), but these are considered extremely rare (DoN, 2006). There are no abundance estimates for this species in the NMFS stock assessment report for this area of the Pacific. Given the extremely low likelihood of this species occurrence in the action area, the northern right whale dolphin will not be considered further in this analysis.

Risso's Dolphin—The likelihood of Risso's dolphin (*Grampus griseus*) occurring in the action area is extremely low. The Risso's dolphin is distributed worldwide in tropical to warm-temperate waters, roughly between 60° N and 60° S, where surface water temperature is usually greater than 10° C (Kruse *et al.,* 1999). The average sea surface temperature for the GoA is reported to be approximately 9.6° C and has undergone a warming trend since 1957 (Aquarone and Adams, 2008). The average summer temperature within the upper 328 ft (100 m) of the TMAA is approximately 11° C based on data as presented in the modeling analysis undertaken by the Navy. In the eastern Pacific, Risso's dolphins range from the GoA to Chile (Leatherwood *et al.,* 1980; Reimchen, 1980; Braham, 1983; Olavarria *et al.,* 2001). Water temperature appears to be a factor that affects the distribution of Risso's dolphins in the Pacific (Leatherwood *et al.,* 1980; Kruse *et al.,* 1999). Risso's dolphins are expected to be extralimital in the TMAA. They prefer tropical to warm temperate waters and have seldom been sighted in the cold waters of the GoA. Records of Risso's dolphins near the TMAA include sightings near Chirikof Island (southwest of Kodiak Island) and offshore in the GoA, just south of the TMAA boundary (Consiglieri *et al.,* 1980; Braham, 1983). Given the extremely low likelihood of this species occurrence in the action area, the Risso's dolphin will not be considered further in this analysis.

Short-Finned Pilot Whale—Short-finned pilot whales (*Globicephala macrohynchus*) are not expected to occur in the GoA TMAA. This species is found in tropical to warm temperate seas, generally in deep offshore areas, and they do not usually range north of 50° N (DoN, 2006). There are two records of this species in Alaskan waters. In 1937, a short-finned pilot whale was taken near Katanak on the Alaska Peninsula and a group of five short-finned pilot whales were sighted just southeast of Kodiak Island in May 1977 (DoN, 2006). There are no abundance estimates available for this species in the NMFS stock assessment report for this area of the Pacific. Given the extremely low likelihood of this species' occurrence in the action area, the short-finned pilot whale will not be considered further in this analysis.

The Navy has compiled information on the abundance, behavior, status and distribution, and vocalizations of marine mammal species in the GoA TMAA waters from the Navy Marine Resource Assessment and has supplemented this information with additional citations derived from new survey efforts and scientific publications. NMFS has designated stocks of marine mammals in the waters surrounding the GoA TMAA and, therefore, compiles stock assessment reports for this area. This information may be viewed in the Navy's LOA application and/or the Navy's DEIS for the GoA TMAA (see Availability), and is incorporated by reference herein.

There are no designated marine mammal critical habitats or known foraging areas within the GoA TMAA; however, critical habitats for two ESA-listed species have been designated in the vicinity of the GoA TMAA. On April 8, 2008, NMFS designated two areas as North Pacific right whale critical habitat—one in the GoA and one in the Bering Sea (73 FR 19000). The GoA critical habitat is located approximately 16 nm (30 km) west of the southwest corner of the TMAA. NMFS designated critical habitat for Steller sea lions on August 27, 1993 (58 FR 45269). For the western Distinct Population Segment (DPS), "aquatic zone" critical habitat surrounding haulouts and rookeries extends 20 nm (37 km) seaward in state and federally managed waters, portions of which are adjacent to the TMAA.

Much is unknown about the feeding habits of the dolphin and porpoise species in the GoA TMAA, but they are thought to feed opportunistically throughout their range (like better studied species and stocks are known to do) and possibly throughout the year. Even less is known about the feeding habits of beaked whales. Baleen whales and sperm whales are thought to forage seasonally in areas within and around the GoA TMAA. For example, Moore *et al.* (2007) provided evidence of a year-round occurrence of gray whales and a noteworthy feeding area in the northeastern GoA (southeast of Kodiak Island).

Marine Mammal Hearing and Vocalizations

Cetaceans have an auditory anatomy that follows the basic mammalian pattern, with some changes to adapt to the demands of hearing underwater. The typical mammalian ear is divided into an outer ear, middle ear, and inner ear. The outer ear is separated from the inner ear by a tympanic membrane, or eardrum. In terrestrial mammals, the outer ear, eardrum, and middle ear transmit airborne sound to the inner ear, where the sound waves are propagated through the cochlear fluid. Since the impedance of water is close to that of the tissues of a cetacean, the outer ear is not required to transduce sound energy as it does when sound waves travel from air to fluid (inner ear). Sound waves traveling through the inner ear cause the basilar membrane to vibrate. Specialized cells, called hair cells, respond to the vibration and produce nerve pulses that are transmitted to the central nervous system. Acoustic energy causes the basilar membrane in the cochlea to vibrate. Sensory cells at different positions along the basilar membrane are excited by different frequencies of sound (Pickles, 1998). Baleen whales have inner ears that appear to be specialized for low-frequency hearing. Conversely, dolphins and porpoises have ears that are specialized to hear high frequencies.

Marine mammal vocalizations often extend both above and below the range of human hearing; vocalizations with frequencies lower than 18 Hz are labeled as infrasonic and those higher than 20 kHz as ultrasonic (National Research Council (NRC), 2003; Figure 4–1). Measured data on the hearing abilities of cetaceans are sparse, particularly for the larger cetaceans such as the baleen whales. The auditory thresholds of some of the smaller odontocetes have been determined in captivity. It is generally believed that cetaceans should at least be sensitive to the frequencies of their own vocalizations. Comparisons of the anatomy of cetacean inner ears and models of the structural properties and the response to vibrations of the ear's components in different species provide an indication of likely sensitivity to

various sound frequencies. The ears of small toothed whales are optimized for receiving high-frequency sound, while baleen whale inner ears are best in low to infrasonic frequencies (Ketten, 1992; 1997; 1998).

Baleen whale vocalizations are composed primarily of frequencies below 1 kHz, and some contain fundamental frequencies as low as 16 Hz (Watkins *et al.,* 1987; Richardson *et al.,* 1995; Rivers, 1997; Moore *et al.,* 1998; Stafford *et al.,* 1999; Wartzok and Ketten, 1999) but can be as high as 24 kHz (humpback whale; Au *et al.,* 2006). Clark and Ellison (2004) suggested that baleen whales use low-frequency sounds not only for long-range communication, but also as a simple form of echo ranging, using echoes to navigate and orient relative to physical features of the ocean. Information on auditory function in mysticetes is extremely lacking. Sensitivity to low-frequency sound by baleen whales has been inferred from observed vocalization frequencies, observed reactions to playback of sounds, and anatomical analyses of the auditory system. Although there is apparently much variation, the source levels of most baleen whale vocalizations lie in the range of 150–190 dB re 1 μPa at 1 m. Low-frequency vocalizations made by baleen whales and their corresponding auditory anatomy suggest that they have good low-frequency hearing (Ketten, 2000), although specific data on sensitivity, frequency or intensity discrimination, or localization abilities are lacking. Marine mammals, like all mammals, have typical U-shaped audiograms that begin with relatively low sensitivity (high threshold) at some specified low frequency with increased sensitivity (low threshold) to a species specific optimum followed by a generally steep rise at higher frequencies (high threshold) (Fay, 1988).

The toothed whales produce a wide variety of sounds, which include species-specific broadband "clicks" with peak energy between 10 and 200 kHz, individually variable "burst pulse" click trains, and constant frequency or frequency-modulated (FM) whistles ranging from 4 to 16 kHz (Wartzok and Ketten, 1999). The general consensus is that the tonal vocalizations (whistles) produced by toothed whales play an important role in maintaining contact between dispersed individuals, while broadband clicks are used during echolocation (Wartzok and Ketten, 1999). Burst pulses have also been strongly implicated in communication, with some scientists suggesting that they play an important role in agonistic encounters (McCowan and Reiss, 1995), while others have proposed that they represent "emotive" signals in a broader sense, possibly representing graded communication signals (Herzing, 1996). Sperm whales, however, are known to produce only clicks, which are used for both communication and echolocation (Whitehead, 2003). Most of the energy of toothed whale social vocalizations is concentrated near 10 kHz, with source levels for whistles as high as 100 to 180 dB re 1 μPa at 1 m (Richardson *et al.,* 1995). No odontocete has been shown audiometrically to have acute hearing (<80 dB re 1 μPa) below 500 Hz (DoN, 2001). Sperm whales produce clicks, which may be used to echolocate (Mullins *et al.,* 1988), with a frequency range from less than 100 Hz to 30 kHz and source levels up to 230 dB re 1 μPa 1 m or greater (Mohl *et al.,* 2000).

Table 5a and Table 5b list the species found in the GoA TMAA and include a summary of their vocalizations, if available. The "Brief Background on Sound" section below contains a description of the functional hearing groups designated by Southall *et al.* (2007), which includes the functional hearing range of various marine mammal groups (*i.e.,* what frequencies that can actually hear).

BILLING CODE 3510–22–P

Species	Signal Type	Frequency Range (kHz)	Frequency Near Max Energy (kHz)	Source Level (dB re 1	Duration / Other
Blue whale	moans, long duration songs	0.012 - .4	.012 - .025	188	up to 36 s, repeated every 1 - 2 min
	FM sweeps	0.858 ± 0.148			< 5 s
	vocalizations	0.012 - .4	.012 - .025		
Fin whale	vocalizations	- / .015 - .028	- / -	159-184 / 185-192	
	moans	0.016 - 0.75	0.02	160-190	
	pulses	0.04 - 0.075 / 0.018 - 0.025	- / 0.02		
	ragged pulse	< 0.03			
	rumbles	- / 0.01 - 0.03	< 0.03 / -		
	moans, downsweeps	0.014 - 0.118	0.02	160-186	
	constant call	0.02 - 0.04			
	moans, tones, upsweeps	0.03 - 0.75		155-165	
	whistles, chirps	1.5 - 5	1.5 - 2.5		
	clicks	16 - 28			
	vocal sequence, ♂ only	0.015 - 0.03			
	FM sweeps	0.018 - .23		184 - 186	1 s
Humpback whale	social	.020 - 10 / 0.05 -10	<3 / 0.1 - 4		
	songs	0.03 - 8 / -	0.12 - 4 / -	144 - 186 / 151-173	
	shrieks		0.75 - 1.8	179-181	
	horn blasts		0.41 - 0.42	181-185	
	moans	0.02 - 1.8	0.035 - 0.36	175	
	grunts	0.025 - 1.9		190	
	pulse trains	0.025 - 1.25	0.025 - 0.080	179-181	
	slap	0.03 - 1.2		183-192	
	feeding calls	0.02 - 2	0.5	162 -192	< 1 s
Calf	simple vocalization	0.14 - 4	0.22 (mean)		
Sei whale	FM sweeps	1.5 - 3.5			7 to 20 sweeps lasting 4 ms
	growls, whooshes, tonal calls	0.433		156	.45 s
	growls and whooshes	0.241 - 0.625		152.4 - 159.6	
Minke whale	sweeps, moans	0.06 - 0.14		151-175	
	down sweeps	0.06 - 0.13		165	
	moans, grunts	0.06 - 0.14	0.06 - 0.14	151-175	
	ratchet	0.85 - 6	0.85		
	thump trains	0.1 - 2	0.1 - 0.2		
	speed up pulse train	0.2 - 0.4			40 to 60 ms
	slow down pulse train	0.25 - 0.35			70 to 140 ms
	Star Wars vocalization	0.05 - 9.4		150-165	
	Breeding Boings (pulse then amp-mod. call)	1.3 - 1.4			2.5 s with slight frequency modulation
	vocalizations	0.06 - 12			
North Pacific right whale	call	<0.400	<0.200		
	moans	<0.400			
Gray whale	call	0.2 - 2.5	1 - 1.5		
	moans	0.02 - 1.20	0.020 - 0.200, 0.700 - 1.2	185	
	modulated pulse	0.08 - 1.8	0.225 - 0.600		
	FM sweeps	0.10 - 0.35	0.3		
	pulses	0.10 - 2	0.300 - 0.825		
Calf	clicks	0.10 - 20	3.4 - 4		

Table 5a. Summary of mysticete vocalization information compiled from The Biology of Marine Mammals (Reynolds and Rommel (eds), 1999) and the Navy's SOCAL, AFAST, HRC, and MIRC EISs - see those documents for specific information.

Species	Signal Type	Frequency Range (kHz)	Frequency Near Max energy	Source Level (dB	Duration / Other
Sperm whale	clicks	0.1 - 30	2 - 4, 10 - 16	160 - 180	< 30 ms
	short clicks			236	< 1 μs, highly
	trumpets			172	
Neonate	clicks		0.5	140 - 162	< 2 to 12 ms, low
Baird's beaked whale	echolocation	.3 - 129			
	social	0.002 - 0.016			
Cuvier's beaked whale	echolocation clicks	20 - 40, 20 - 70		214	< 200 to 250 μs,
	whistles	8 - 12			upsweep lasts 1 s
	pulses	13 - 17			15 to 44 s
Stejneger's beaked whale					
Dall's porpoise	clicks		120 - 160		50 to 1,500 μsec
	clicks	0.04 - 12 / -	- / 135 - 149	) - 148 / 165-175	
Risso's dolphin	whistles		3.5 - 4.5		
	rasp / pulse burst	0.1 - > 8	2 - 5		
	click		65	~120	
	whistle / burst	4 - 22			< 1 sec to several s
	broadband clicks	6 - > 22			
	narrowband grunts	0.4 - 0.8			
	echolocation clicks	30 - 50, 80 - 100		up to 216	
Pacific white-sided dolphin	whistles	.002 - .02	12-Apr		
	pulse trains for	- / -	50 - 80 / 60 -80	170 / 180	
Harbor porpoise	clicks	2		100	
	pulse	100 - 160	110 - 150		
	click		110 - 150	135 - 177	
Northern right whale dolphin	whistles, tones	1 - 16	1.8, 3		
False killer whale	whistles		4 - 9.5		
	clicks		25 -30, 95 - 130	220-228	
	echolocation clicks	20 - 130	40	201 - 225	
Killer whale	whistles	1.5 - 18	6 - 12		
	clicks	0.1 - 35 / 0.25 - 0.5	12 - 25	180	
	scream	2			
	pulsed calls	0.5 - 25	1 - 6	160	
Canadian killer whale	echolocation clicks		45 - 80	195 - 224	< 80 - 120 μs
Norwegian killer whale	echolocation clicks		22 - 49	173 - 202	< 31 - 203 μs
Short-finned pilot whale	whistles	0.5 - > 20	2 to 14	180	
	click		30 - 60	180	
Northern elephant seal					
Pacific harbor seal	communication	.100 - 1			
	clicks	8 - 150	12 - 40		
	roar	0.4 - 4	0.4 - 0.8		
	growl, grunt, groan	< 0.1 - 0.4	< 0.1 - 0.25		
	creak	0.7 - 4	0.7 - 2		
California sea lion	barks	< 8	< 3.5		
	whinny	< 1 - 3			
	clicks		0.5 - 4		
	buzzing	< 1 - 4	< 1		
Harbor seal	clicks	8 - 150	12 - 40		
	roar	0.4 - 4	0.4 - 0.8		
	growl, grunt, groan	<0.1 - 0.4	<0.1 - 0.25		
	creak	0.7 - 4	0.7 - 2		
Northern fur seal	clicks, bleats				
Steller sea lion	clicks, growls				

Table 5b. Summary of odontocete and pinniped vocalization information compiled from The Biology of Marine Mammals (Reynolds and Rommel (eds), 1999) and the Navy's SOCAL, AFAST, HRC, and MIRC EISs - see those documents for specific information.

BILLING CODE 35–22–C

Marine Mammal Density Estimates

Understanding the distribution and abundance of a particular marine mammal species or stock is necessary to analyze the potential impacts of an action on that species or stock. Furthermore, it is necessary to know the density of the animals in the affected area in order to quantitatively assess the likely acoustic impacts of a potential action on individuals and estimate take (discussed further in the Estimated Take section).

Density is nearly always reported for an area (*e.g.,* animals per km ^{2}). Analyses of survey results using distance sampling techniques include correction factors for animals at the surface but not seen as well as animals below the surface and not seen. Therefore, although the area (*e.g.,* km^2) appears to represent only the surface of the water (two-dimensional), density actually implicitly includes animals anywhere within the water column under that surface area. In addition, density assumes that animals are uniformly distributed within the prescribed area, even though this is likely a rare occurrence. Marine mammals are usually concentrated in areas of greater importance, such as areas of high productivity, low predation, safe calving, etc. Density can occasionally be calculated for smaller areas that are regularly used by marine mammals, but more often than not, there are insufficient data to calculate density for small areas. Therefore, assuming an even distribution within the prescribed area remains the norm.

Recent survey data for marine mammals in the GoA is limited and most survey efforts were localized and extremely nearshore. In addition to the visual surveys, there is evidence of several species based on acoustic studies, but these do not provide measurements of abundance (*e.g.,* Stafford, 2009).

In April 2009, the Navy funded and NMFS conducted the Gulf of Alaska Line-Transect Survey (GOALS) to address the data needs for this analysis (Rone *et al.,* 2009). Line-transect survey visual data to support distance sampling statistics and acoustic data were collected over a 10-day period both within and outside the TMAA. This survey resulted in sightings of several species and allowed for the derivation of densities for fin and humpback whale (Rone *et al.,* 2009). In addition to this latest survey, two previous vessel surveys conducted in the nearshore region of the TMAA were also used to derive the majority of the density data used in acoustic modeling for this analysis. The methods used to derive density estimates for all remaining species in the TMAA are detailed in Appendix B of the LOA application and summarized below.

Zerbini *et al.* (2006) conducted dedicated vessel surveys for large whales in summer 2001–2003 from Resurrection Bay on the Kenai Peninsula to Amchitka Island in the Aleutian Islands. Survey effort near the TMAA was nearshore (within approximately 46 nm (85 km) of shore), and is delineated as "Block 1" in the original paper. Densities for this region were published for fin and humpback whales.

Waite (2003) conducted vessel surveys for cetaceans near Kenai Peninsula, within Prince William Sound and around Kodiak Island, during acoustic-trawl surveys for pollock in summer 2003. Surveys extended offshore to the 1,000 m isobaths and therefore overlapped with some of the TMAA. Waite (2003) did not calculate densities, but did provide some of the elements necessary for calculating density (please see Appendix B of the LOA application for more information).

Mysticetes occurring in the GoA include blue, fin, gray, humpback, minke, North Pacific right, and sei whales (Angliss and Allen, 2008; Rone *et al.,* 2009). Blue, North Pacific right, and sei whales are considered rare, and are included here only for discussion purposes due to their designations as "depleted" under the MMPA and "endangered" under the ESA.

Gray whale density was calculated from data obtained during nearshore feeding studies in the GoA. Gray whales are found almost exclusively in near shore areas; therefore, they would not be expected to be found in the majority of the TMAA (≤50 nm (93 km) offshore and >5,997 ft (1,828 m) depth) (DoN, 2006). The recent 2009 survey encountered one group of two gray whales on the shelf within the western edge of the TMAA and two groups well outside the TMAA near shore at Kodiak Island (Rone *et al.,* 2009).

Odontocetes occurring regularly include sperm whale, Cuvier's, Baird's, and Stejneger's beaked whales, killer whale, Pacific white-sided dolphin, and Dall's porpoise (Angliss and Allen, 2008; Rone *et al.,* 2009). In Alaska waters, harbor porpoise inhabit coastal waters where depths are less than 328 ft (100 m) in depth (DoN, 2006; Angliss and Allen, 2008). The majority of the TMAA is well offshore of the normal habitat range for harbor porpoise. There is no density data available for this species in the nearshore portion of the TMAA that overlaps the harbor porpoise range. An estimated quantification of impacts for harbor porpoise was, however, undertaken as described in the Potential Effects of Specified Activities on Marine Mammals section.

Pinnipeds occurring regularly include Steller sea lion, northern fur seal, and northern elephant seal. The range of California sea lions extends as far north as the Pribolof Islands in the Bering Sea. Tagging data indicate that most northern fur seal foraging and migration takes place to the west of the TMAA (Ream *et al.,* 2005), although the derived density for this species assumed the population would be present in the area for modeling purposes. Harbor seals are primarily a coastal species and are rarely found more than 12 mi (20 km) from shore (DoN, 2006). Harbor seals should be very rare in the TMAA and there was no attempt to model for this species.

Pinniped at-sea density is not often available because pinniped abundance is obtained via shore counts of animals at known rookeries and haulouts. Lacking any other available means of quantification, densities of pinnipeds were derived using shore counts. Several parameters were identified for pinnipeds from the literature, including area of stock occurrence, number of animals (which may vary seasonally) and season, and those parameters were then used to calculate density. Once density per "pinniped season" was determined, those values were prorated to fit the warm water (June through October) and cold water (November through May) seasons. Determining density in this manner is risky because the parameters used usually contain error (*e.g.,* geographic range is not exactly known and needs to be estimated and abundance estimates usually have large variances). As is true of all density estimates, they assume that the animals are always distributed evenly within an area which is likely never true.

Brief Background on Sound

An understanding of the basic properties of underwater sound is necessary to comprehend many of the concepts and analyses presented in this document. A summary is included below.

Sound is a wave of pressure variations propagating through a medium (for the MFAS/HFAS considered in this proposed rule, the medium is marine water). Pressure variations are created by compressing and relaxing the medium. Sound measurements can be expressed in two forms: Intensity and pressure. Acoustic intensity is the average rate of energy transmitted

through a unit area in a specified direction and is expressed in watts per square meter (W/m²). Acoustic intensity is rarely measured directly, but rather from ratios of pressures; the standard reference pressure for underwater sound is 1 microPascal (μPa); for airborne sound, the standard reference pressure is 20 μPa (Richardson *et al.,* 1995).

Acousticians have adopted a logarithmic scale for sound intensities, which is denoted in decibels (dB). Decibel measurements represent the ratio between a measured pressure value and a reference pressure value (in this case 1 μPa or, for airborne sound, 20 μPa). The logarithmic nature of the scale means that each 10 dB increase is a ten-fold increase in power (*e.g.,* 20 dB is a 100-fold increase over 10 dB, 30 dB is a 1,000-fold increase over 10 dB). Humans perceive a 10 dB increase in noise as a doubling of loudness, or a 10 dB decrease in noise as a halving of loudness. The term "sound pressure level" implies a decibel measure and a reference pressure that is used as the denominator of the ratio. Throughout this document, NMFS uses 1 microPascal (denoted re: 1μPa) as a standard reference pressure unless noted otherwise.

It is important to note that decibels underwater and decibels in air are not the same and cannot be directly compared. Because of the different densities of air and water and the different decibel standards (*i.e.,* reference pressures) in air and water, a sound with the same intensity (*i.e.,* power) in air and in water would be approximately 63 dB quieter in air. Thus, a sound that measures 160 dB underwater would have the same approximate effective intensity as a sound that is 97 dB in air.

Sound frequency is measured in cycles per second, or Hertz (abbreviated Hz), and is analogous to musical pitch; high-pitched sounds contain high frequencies and low-pitched sounds contain low frequencies. Natural sounds in the ocean span a huge range of frequencies: from earthquake noise at 5 Hz to harbor porpoise clicks at 150,000 Hz (150 kHz). These sounds are so low or so high in pitch that humans cannot even hear them; acousticians call these infrasonic (typically below 20 Hz) and ultrasonic (typically above 20,000 Hz) sounds, respectively. A single sound may be made up of many different frequencies together. Sounds made up of only a small range of frequencies are called "narrowband", and sounds with a broad range of frequencies are called "broadband"; explosives are an example of a broadband sound source and active tactical sonars are an example of a narrowband sound source.

When considering the influence of various kinds of sound on the marine environment, it is necessary to understand that different kinds of marine life are sensitive to different frequencies of sound. Based on available behavioral data, audiograms derived using auditory evoked potential (AEP) techniques, anatomical modeling, and other data, Southall *et al.* (2007) designate "functional hearing groups" for marine mammals and estimate the lower and upper frequencies of functional hearing of the groups. Further, the frequency range in which each group's hearing is estimated as being most sensitive is represented in the flat part of the M-weighting functions (which are derived from the audiograms described above; see Figure 1 in Southall *et al.,* 2007) developed for each group. The functional groups and the associated frequencies are indicated below (though, again, animals are less sensitive to sounds at the outer edge of their functional range and most sensitive to sounds of frequencies within a smaller range somewhere in the middle of their functional hearing range):

- Low-frequency cetaceans (13 species of mysticetes): functional hearing is estimated to occur between approximately 7 Hz and 22 kHz;
- Mid-frequency cetaceans (32 species of dolphins, six species of larger toothed whales, and 19 species of beaked and bottlenose whales): functional hearing is estimated to occur between approximately 150 Hz and 160 kHz;
- High-frequency cetaceans (eight species of true porpoises, six species of river dolphins, Kogia, the franciscana, and four species of cephalorhynchids): functional hearing is estimated to occur between approximately 200 Hz and 180 kHz;
- Pinnipeds in water: functional hearing is estimated to occur between approximately 75 Hz and 75 kHz, with the greatest sensitivity between approximately 700 Hz and 20 kHz.

Because ears adapted to function underwater are physiologically different from human ears, comparisons using decibel measurements in air would still not be adequate to describe the effects of a sound on a whale. When sound travels (propagates) away from its source, its loudness decreases as the distance traveled by the sound increases. Thus, the loudness of a sound at its source is higher than the loudness of that same sound a kilometer distant. Acousticians often refer to the loudness of a sound at its source (typically measured one meter from the source) as the source level and the loudness of sound elsewhere as the received level. For example, a humpback whale 3 km from an airgun that has a source level of 230 dB may only be exposed to sound that is 160 dB loud, depending on how the sound propagates (in this example, it is spherical spreading). As a result, it is important not to confuse source levels and received levels when discussing the loudness of sound in the ocean or its impacts on the marine environment.

As sound travels from a source, its propagation in water is influenced by various physical characteristics, including water temperature, depth, salinity, and surface and bottom properties that cause refraction, reflection, absorption, and scattering of sound waves. Oceans are not homogeneous and the contribution of each of these individual factors is extremely complex and interrelated. The physical characteristics that determine the sound's speed through the water will change with depth, season, geographic location, and with time of day (as a result, in actual MFAS/HFAS operations, crews will measure oceanic conditions, such as sea water temperature and depth, to calibrate models that determine the path the sonar signal will take as it travels through the ocean and how strong the sound signal will be at a given range along a particular transmission path). As sound travels through the ocean, the intensity associated with the wavefront diminishes, or attenuates. This decrease in intensity is referred to as propagation loss, also commonly called transmission loss.

Metrics Used in This Document

This section includes a brief explanation of the two sound measurements (sound pressure level (SPL) and sound exposure level (SEL)) frequently used in the discussions of acoustic effects in this document.

SPL

Sound pressure is the sound force per unit area, and is usually measured in micropascals (μPa), where 1 Pa is the pressure resulting from a force of one newton exerted over an area of one square meter. SPL is expressed as the ratio of a measured sound pressure and a reference level. The commonly used reference pressure level in underwater acoustics is 1 μPa, and the units for SPLs are dB re: 1 μPa.

SPL (in dB) = 20 log (pressure/reference pressure)

SPL is an instantaneous measurement and can be expressed as the peak, the

peak-peak, or the root mean square (rms). Root mean square, which is the square root of the arithmetic average of the squared instantaneous pressure values, is typically used in discussions of the effects of sounds on vertebrates and all references to SPL in this document refer to the root mean square. SPL does not take the duration of a sound into account. SPL is the applicable metric used in the risk continuum, which is used to estimate behavioral harassment takes (see Level B Harassment Risk Function (Behavioral Harassment) Section).

SEL

SEL is an energy metric that integrates the squared instantaneous sound pressure over a stated time interval. The units for SEL are dB re: 1 μPa^2-s.

SEL = SPL + 10log(duration in seconds)

As applied to MFAS/HFAS, the SEL includes both the SPL of a sonar ping and the total duration. Longer duration pings and/or pings with higher SPLs will have a higher SEL. If an animal is exposed to multiple pings, the SEL in each individual ping is summed to calculate the total SEL. The total SEL depends on the SPL, duration, and number of pings received. The thresholds that NMFS uses to indicate at what received level the onset of temporary threshold shift (TTS) and permanent threshold shift (PTS) in hearing are likely to occur are expressed in SEL.

Potential Effects of Specified Activities on Marine Mammals

The Navy has requested authorization for the take of marine mammals that may occur incidental to training activities in the GoA TMAA utilizing MFAS/HFAS or underwater detonations. In addition to MFAS/HFAS and underwater detonations, the Navy has analyzed other potential impacts to marine mammals from training activities in the GoA TMAA DEIS, including ship strike, aerial overflights, ship noise and movement, and others, and, in consultation with NMFS as a cooperating agency for the GoA TMAA DEIS, has determined that take of marine mammals incidental to these non-acoustic components of the GoA TMAA is unlikely and, therefore, has not requested authorization for take of marine mammals that might occur incidental to these non-acoustic components. In this document, NMFS analyzes the potential effects on marine mammals from exposure to MFAS/HFAS and underwater detonations, but also includes some additional analysis of the potential impacts from vessel operations in the GoA TMAA.

For the purpose of MMPA authorizations, NMFS' effects assessments serve four primary purposes: (1) To help identify the permissible methods of taking, or the nature of the take (*e.g.,* resulting from anthropogenic noise vs. from ship strike, etc.); the regulatory level of take (*i.e.,* mortality vs. Level A or Level B harassment); and the amount of take; (2) to inform the prescription of means of effecting the least practicable adverse impact on such species or stock and its habitat (*i.e.,* mitigation); (3) to support the determination of whether the specified activity will have a negligible impact on the affected species or stocks of marine mammals (based on the likelihood that the activity will adversely affect the species or stock through effects on annual rates of recruitment or survival); and (4) to determine whether the specified activity will have an unmitigable adverse impact on the availability of the species or stock(s) for subsistence uses.

More specifically, for activities involving sonar or underwater detonations, NMFS' analysis will identify the probability of lethal responses, physical trauma, sensory impairment (permanent and temporary threshold shifts and acoustic masking), physiological responses (particular stress responses), behavioral disturbance (that rises to the level of harassment), and social responses that would be classified as behavioral harassment or injury and/or would be likely to adversely affect the species or stock through effects on annual rates of recruitment or survival. In this section, we will focus qualitatively on the different ways that MFAS/HFAS and underwater explosive detonations may affect marine mammals (some of which NMFS would not classify as harassment). Then, in the Estimated Take of Marine Mammals Section, NMFS will relate the potential effects to marine mammals from MFAS/HFAS and underwater detonation of explosives to the MMPA regulatory definitions of Level A and Level B Harassment and attempt to quantify those effects.

Exposure to MFAS/HFAS

In the subsections below, the following types of impacts are discussed in more detail: Direct physiological impacts, stress responses, acoustic masking and impaired communication, behavioral disturbance, and strandings. An additional useful graphic tool for better understanding the layered nature of potential marine mammal responses to anthropogenic sound is presented in Figure 11 of NMFS' June 28, 2010, biological opinion for the Mariana Islands Range Complex (available at: *http://www.nmfs.noaa.gov/pr/permits/incidental.htm#applications*). That document presents a conceptual model of the potential responses of endangered and threatened species upon being exposed to active sonar and the pathways by which those responses might affect the fitness of individual animals that have been exposed, and the resulting impact on the individual animal's ability to reproduce or survive. Literature supporting the framework, with examples drawn from many taxa (both aquatic and terrestrial) was included in the "Application of this Approach" and "Response Analyses" sections of that document.

Direct Physiological Effects

Based on the literature, there are two basic ways that MFAS/HFAS might directly result in physical trauma or damage: Noise-induced loss of hearing sensitivity (more commonly called "threshold shift") and acoustically mediated bubble growth. Separately, an animal's behavioral reaction to an acoustic exposure might lead to physiological effects that might ultimately lead to injury or death, which is discussed later in the Stranding section.

Threshold Shift (Noise-Induced Loss of Hearing)

When animals exhibit reduced hearing sensitivity (*i.e.,* sounds must be louder for an animal to recognize them) following exposure to a sufficiently intense sound, it is referred to as a noise-induced threshold shift (TS). An animal can experience temporary threshold shift (TTS) or permanent threshold shift (PTS). TTS can last from minutes or hours to days (*i.e.,* there is recovery), occurs in specific frequency ranges (*i.e.,* an animal might only have a temporary loss of hearing sensitivity between the frequencies of 1 and 10 kHz), and can be of varying amounts (*e.g.,* an animal's hearing sensitivity might be reduced by only 6 dB or reduced by 30 dB). PTS is permanent (*i.e.,* there is no recovery), but also occurs in a specific frequency range and amount as mentioned above for TTS.

The following physiological mechanisms are thought to play a role in inducing auditory TS: Effects to sensory hair cells in the inner ear that reduce their sensitivity, modification of the chemical environment within the sensory cells, residual muscular activity in the middle ear, displacement of certain inner ear membranes, increased

blood flow, and post-stimulatory reduction in both efferent and sensory neural output (Southall *et al.,* 2007). The amplitude, duration, frequency, temporal pattern, and energy distribution of sound exposure all affect the amount of associated TS and the frequency range in which it occurs. As amplitude and duration of sound exposure increase, so, generally, does the amount of TS, along with the recovery time. Human non-impulsive noise exposure guidelines are based on exposures of equal energy (the same SEL) producing equal amounts of hearing impairment regardless of how the sound energy is distributed in time (NIOSH, 1998). Until recently, previous marine mammal TTS studies have also generally supported this equal energy relationship (Southall *et al.,* 2007). Three newer studies, two by Mooney *et al.* (2009a, 2009b) on a single bottlenose dolphin either exposed to playbacks of Navy MFAS or octave-band noise (4–8 kHz) and one by Kastak *et al.* (2007) on a single California sea lion exposed to airborne octave-band noise (centered at 2.5 kHz), concluded that for all noise exposure situations the equal energy relationship may not be the best indicator to predict TTS onset levels. All three of these studies highlight the inherent complexity of predicting TTS onset in marine mammals, as well as the importance of considering exposure duration when assessing potential impacts. Generally, with sound exposures of equal energy, those that were quieter (lower SPL) with longer duration were found to induce TTS onset more than those of louder (higher SPL) and shorter duration (more similar to MFAS). For intermittent sounds, less TS will occur than from a continuous exposure with the same energy (some recovery will occur between intermittent exposures) (Kryter *et al.,* 1966; Ward, 1997). For example, one short but loud (higher SPL) sound exposure may induce the same impairment as one longer but softer sound, which in turn may cause more impairment than a series of several intermittent softer sounds with the same total energy (Ward, 1997). Additionally, though TTS is temporary, very prolonged exposure to sound strong enough to elicit TTS, or shorter-term exposure to sound levels well above the TTS threshold, can cause PTS, at least in terrestrial mammals (Kryter, 1985) (although in the case of MFAS/HFAS, animals are not expected to be exposed to levels high enough or durations long enough to result in PTS).

PTS is considered auditory injury (Southall *et al.,* 2007). Irreparable damage to the inner or outer cochlear hair cells may cause PTS; however, other mechanisms are also involved, such as exceeding the elastic limits of certain tissues and membranes in the middle and inner ears and resultant changes in the chemical composition of the inner ear fluids (Southall *et al.,* 2007).

Although the published body of scientific literature contains numerous theoretical studies and discussion papers on hearing impairments that can occur with exposure to a loud sound, only a few studies provide empirical information on the levels at which noise-induced loss in hearing sensitivity occurs in nonhuman animals. For cetaceans, published data on the onset of TTS are limited to the captive bottlenose dolphin and beluga (Finneran *et al.,* 2000, 2002b, 2005a; Schlundt *et al.,* 2000; Nachtigall *et al.,* 2003, 2004). For pinnipeds in water, data are limited to Kastak *et al.*'s measurement of TTS in one harbor seal, one elephant seal, and one California sea lion.

Marine mammal hearing plays a critical role in communication with conspecifics and in interpretation of environmental cues for purposes such as predator avoidance and prey capture. Depending on the degree (elevation of threshold in dB), duration (*i.e.,* recovery time), and frequency range of TTS, and the context in which it is experienced, TTS can have effects on marine mammals ranging from discountable to serious (similar to those discussed in auditory masking, below). For example, a marine mammal may be able to readily compensate for a brief, relatively small amount of TTS in a non-critical frequency range that takes place during a time when the animal is traveling through the open ocean, where ambient noise is lower and there are not as many competing sounds present. Alternatively, a larger amount and longer duration of TTS sustained during a time when communication is critical for successful mother/calf interactions could have more serious impacts if it were in the same frequency band as the necessary vocalizations and of a severity that it impeded communication. The fact that animals exposed to levels and durations of sound that would be expected to result in this physiological response would also be expected to have behavioral responses of a comparatively more severe or sustained nature is also notable and potentially of more importance than the simple existence of a TTS.

Also, depending on the degree and frequency range, the effects of PTS on an animal could range in severity, although it is considered generally more serious than TTS because it is a permanent condition. Of note, reduced hearing sensitivity as a simple function of development and aging has been observed in marine mammals, as well as humans and other taxa (Southall *et al.,* 2007), so we can infer that strategies exist for coping with this condition to some degree, though likely not without cost. There is no empirical evidence that exposure to MFAS/HFAS can cause PTS in any marine mammals; instead, the probability of PTS has been inferred from studies of TTS (see Richardson *et al.,* 1995).

Acoustically Mediated Bubble Growth

One theoretical cause of injury to marine mammals is rectified diffusion (Crum and Mao, 1996), the process of increasing the size of a bubble by exposing it to a sound field. This process could be facilitated if the environment in which the ensonified bubbles exist is supersaturated with gas. Repetitive diving by marine mammals can cause the blood and some tissues to accumulate gas to a greater degree than is supported by the surrounding environmental pressure (Ridgway and Howard, 1979). The deeper and longer dives of some marine mammals (*e.g.,* beaked whales) are theoretically predicted to induce greater supersaturation (Houser *et al.,* 2001b), although recent preliminary empirical data suggests that there is no increase in blood nitrogen levels or formation of bubbles in diving bottlenose dolphins (Houser, 2008). If rectified diffusion were possible in marine mammals exposed to high-level sound, conditions of tissue supersaturation could theoretically speed the rate and increase the size of bubble growth. Subsequent effects due to tissue trauma and emboli would presumably mirror those observed in humans suffering from decompression sickness.

It is unlikely that the short duration of MFAS pings would be long enough to drive bubble growth to any substantial size, if such a phenomenon occurs. However, an alternative but related hypothesis has also been suggested; stable bubbles could be destabilized by high-level sound exposures such that bubble growth then occurs through static diffusion of gas out of the tissues. In such a scenario the marine mammal would need to be in a gas-supersaturated state for a long enough period of time for bubbles to become of a problematic size.

Yet another hypothesis (decompression sickness) speculates that rapid ascent to the surface following exposure to a startling sound

might produce tissue gas saturation sufficient for the evolution of nitrogen bubbles (Jepson *et al.,* 2003; Fernandez *et al.,* 2005). In this scenario, the rate of ascent would need to be sufficiently rapid to compromise behavioral or physiological protections against nitrogen bubble formation. Alternatively, Tyack *et al.* (2006) studied the deep diving behavior of beaked whales and concluded that: "Using current models of breath-hold diving, we infer that their natural diving behavior is inconsistent with known problems of acute nitrogen supersaturation and embolism." Collectively, these hypotheses can be referred to as "hypotheses of acoustically mediated bubble growth."

Although theoretical predictions suggest the possibility for acoustically mediated bubble growth, there is considerable disagreement among scientists as to its likelihood (Piantadosi and Thalmann, 2004; Evans and Miller, 2003; Cox *et al.,* 2006; Rommel *et al.,* 2006). Crum and Mao (1996) hypothesized that received levels would have to exceed 190 dB in order for there to be the possibility of significant bubble growth due to supersaturation of gases in the blood (*i.e.,* rectified diffusion). More recent work conducted by Crum *et al.* (2005) demonstrated the possibility of rectified diffusion for short duration signals, but at SELs and tissue saturation levels that are highly improbable to occur in diving marine mammals. To date, energy levels (ELs) predicted to cause in vivo bubble formation within diving cetaceans have not been evaluated (NOAA, 2002b). Although it has been argued that traumas from some recent beaked whale strandings are consistent with gas emboli and bubble-induced tissue separations (Jepson *et al.,* 2003), there is no conclusive evidence of this (Rommel *et al.,* 2006). However, Jepson *et al.* (2003, 2005) and Fernandez *et al.* (2004, 2005) concluded that in vivo bubble formation, which may be exacerbated by deep, long-duration, repetitive dives, may explain why beaked whales appear to be particularly vulnerable to MFAS/HFAS exposures. Further investigation is needed to further assess the potential validity of these hypotheses. More information regarding hypotheses that attempt to explain how behavioral responses to MFAS/HFAS can lead to strandings is included in the Behaviorally Mediated Bubble Growth Section, after the summary of strandings.

Acoustic Masking

Marine mammals use acoustic signals for a variety of purposes, which differ among species, but include communication between individuals, navigation, foraging, reproduction, and learning about their environment (Erbe and Farmer, 2000; Tyack, 2000). Masking, or auditory interference, generally occurs when sounds in the environment are louder than, and of a similar frequency as, auditory signals an animal is trying to receive. Masking is a phenomenon that affects animals that are trying to receive acoustic information about their environment, including sounds from other members of their species, predators, prey, and sounds that allow them to orient in their environment. Masking these acoustic signals can disturb the behavior of individual animals, groups of animals, or entire populations.

The extent of the masking interference depends on the spectral, temporal, and spatial relationships between the signals an animal is trying to receive and the masking noise, in addition to other factors. In humans, significant masking of tonal signals occurs as a result of exposure to noise in a narrow band of similar frequencies. As the sound level increases, the detection of frequencies above those of the masking stimulus decreases. This principle is expected to apply to marine mammals as well because of common biomechanical cochlear properties across taxa.

Richardson *et al.* (1995b) argued that the maximum radius of influence of an industrial noise (including broadband low-frequency sound transmission) on a marine mammal is the distance from the source to the point at which the noise can barely be heard. This range is determined by either the hearing sensitivity of the animal or the background noise level present. Industrial masking is most likely to affect some species' ability to detect communication calls and natural sounds (*i.e.,* surf noise, prey noise, etc.) (Richardson *et al.,* 1995).

The echolocation calls of toothed whales are subject to masking by high-frequency sound. Human data indicate that low-frequency sounds can mask high-frequency sounds (*i.e.,* upward masking). Studies on captive odontocetes by Au *et al.* (1974, 1985, 1993) indicate that some species may use various processes to reduce masking effects (*e.g.,* adjustments in echolocation call intensity or frequency as a function of background noise conditions). There is also evidence that the directional hearing abilities of odontocetes are useful in reducing masking at the higher frequencies these cetaceans use to echolocate, but not at the low-to-moderate frequencies they use to communicate (Zaitseva *et al.,* 1980). A recent study by Nachtigall and Supin (2008) showed that false killer whales adjust their hearing to compensate for ambient sounds and the intensity of returning echolocation signals.

As mentioned previously, the functional hearing ranges of odontocetes, pinnipeds underwater, and mysticetes all overlap with the frequencies of the MFAS/HFAS sources used in the Navy's MFAS/HFAS training exercises (although some mysticetes' best hearing capacities are likely at frequencies somewhat lower than MFAS). Additionally, in almost all species, vocal repertoires span across the frequencies of these MFAS/HFAS sources used by the Navy. The closer the characteristics of the masking signal to the signal of interest, the more likely masking is to occur. For hull-mounted MFAS/HFAS, which accounts for the largest takes of marine mammals (because of the source strength and number of hours it's conducted), the pulse length and duty cycle of the MFAS/HFAS signal (~ 1 second pulse twice a minute) makes it less likely that masking will occur as a result.

Impaired Communication

In addition to making it more difficult for animals to perceive acoustic cues in their environment, anthropogenic sound presents separate challenges for animals that are vocalizing. When they vocalize, animals are aware of environmental conditions that affect the "active space" of their vocalizations, which is the maximum area within which their vocalizations can be detected before they drop to the level of ambient noise (Brenowitz, 2004; Brumm *et al.,* 2004; Lohr *et al.,* 2003). Animals are also aware of environmental conditions that affect whether listeners can discriminate and recognize their vocalizations from other sounds, which is more important than simply detecting that a vocalization is occurring (Brenowitz, 1982; Brumm *et al.,* 2004; Dooling, 2004, Marten and Marler, 1977; Patricelli *et al.,* 2006). Most animals that vocalize have evolved with an ability to make adjustments to their vocalizations to increase the signal-to-noise ratio, active space, and recognizability/distinguishability of their vocalizations in the face of temporary changes in background noise (Brumm *et al.,* 2004; Patricelli *et al.,* 2006). Vocalizing animals can make adjustments to vocalization characteristics such as the frequency structure, amplitude, temporal structure and temporal delivery.

Many animals will combine several of these strategies to compensate for high levels of background noise.

Anthropogenic sounds that reduce the signal-to-noise ratio of animal vocalizations, increase the masked auditory thresholds of animals listening for such vocalizations, or reduce the active space of an animal's vocalizations to impair communication between animals. Most animals that vocalize have evolved strategies to compensate for the effects of short-term or temporary increases in background or ambient noise on their songs or calls. Although the fitness consequences of these vocal adjustments remain unknown, like most other trade-offs animals must make, some of these strategies probably come at a cost (Patricelli *et al.,* 2006). For example, vocalizing more loudly in noisy environments may have energetic costs that decrease the net benefits of vocal adjustment and alter a bird's energy budget (Brumm, 2004; Wood and Yezerinac, 2006). Shifting songs and calls to higher frequencies may also impose energetic costs (Lambrechts, 1996).

Stress Responses

Classic stress responses begin when an animal's central nervous system perceives a potential threat to its homeostasis. That perception triggers stress responses regardless of whether a stimulus actually threatens the animal; the mere perception of a threat is sufficient to trigger a stress response (Moberg, 2000; Sapolsky *et al.,* 2005; Seyle, 1950). Once an animal's central nervous system perceives a threat, it mounts a biological response or defense that consists of a combination of the four general biological defense responses: Behavioral responses, autonomic nervous system responses, neuroendocrine responses, or immune responses.

In the case of many stressors, an animal's first and most economical (in terms of biotic costs) response is behavioral avoidance of the potential stressor or avoidance of continued exposure to a stressor. An animal's second line of defense to stressors involves the sympathetic part of the autonomic nervous system and the classical "fight or flight" response which includes the cardiovascular system, the gastrointestinal system, the exocrine glands, and the adrenal medulla to produce changes in heart rate, blood pressure, and gastrointestinal activity that humans commonly associate with "stress." These responses have a relatively short duration and may or may not have significant long-term effect on an animal's welfare.

An animal's third line of defense to stressors involves its neuroendocrine or sympathetic nervous systems; the system that has received the most study has been the hypothalmus-pituitary-adrenal system (also known as the HPA axis in mammals or the hypothalamus-pituitary-interrenal axis in fish and some reptiles). Unlike stress responses associated with the autonomic nervous system, virtually all neuro-endocrine functions that are affected by stress—including immune competence, reproduction, metabolism, and behavior—are regulated by pituitary hormones. Stress-induced changes in the secretion of pituitary hormones have been implicated in failed reproduction (Moberg, 1987; Rivier, 1995), altered metabolism (Elasser *et al.,* 2000), reduced immune competence (Blecha, 2000), and behavioral disturbance. Increases in the circulation of glucocorticosteroids (cortisol, corticosterone, and aldosterone in marine mammals; see Romano *et al.,* 2004) have been equated with stress for many years.

The primary distinction between stress (which is adaptive and does not normally place an animal at risk) and distress is the biotic cost of the response. During a stress response, an animal uses glycogen stores that can be quickly replenished once the stress is alleviated. In such circumstances, the cost of the stress response would not pose a risk to the animal's welfare. However, when an animal does not have sufficient energy reserves to satisfy the energetic costs of a stress response, energy resources must be diverted from other biotic functions, which impair those functions that experience the diversion. For example, when mounting a stress response diverts energy away from growth in young animals, those animals may experience stunted growth. When mounting a stress response diverts energy from a fetus, an animal's reproductive success and fitness will suffer. In these cases, the animals will have entered a pre-pathological or pathological state which is called "distress" (sensu Seyle, 1950) or "allostatic loading" (sensu McEwen and Wingfield, 2003). This pathological state will last until the animal replenishes its biotic reserves sufficient to restore normal function. Note that these examples involved a long-term (days or weeks) stress response exposure to stimuli.

Relationships between these physiological mechanisms, animal behavior, and the costs of stress responses have also been documented fairly well through controlled experiment; because this physiology exists in every vertebrate that has been studied, it is not surprising that stress responses and their costs have been documented in both laboratory and free-living animals (for examples see, Holberton *et al.,* 1996; Hood *et al.,* 1998; Jessop *et al.,* 2003; Krausman *et al.,* 2004; Lankford *et al.,* 2005; Reneerkens *et al.,* 2002; Thompson and Hamer, 2000). Although no information has been collected on the physiological responses of marine mammals to anthropogenic sound exposure, studies of other marine animals and terrestrial animals would lead us to expect some marine mammals to experience physiological stress responses and, perhaps, physiological responses that would be classified as "distress" upon exposure to high-frequency and mid-frequency sounds.

For example, Jansen (1998) reported on the relationship between acoustic exposures and physiological responses that are indicative of stress responses in humans (*e.g.,* elevated respiration and increased heart rates). Jones (1998) reported on reductions in human performance when faced with acute, repetitive exposures to acoustic disturbance. Trimper *et al.* (1998) reported on the physiological stress responses of osprey to low-level aircraft noise while Krausman *et al.* (2004) reported on the auditory and physiology stress responses of endangered Sonoran pronghorn to military overflights. Smith *et al.* (2004a, 2004b) identified noise-induced physiological transient stress responses in hearing-specialist fish (*i.e.,* goldfish) that accompanied short- and long-term hearing losses. Welch and Welch (1970) reported physiological and behavioral stress responses that accompanied damage to the inner ears of fish and several mammals.

Hearing is one of the primary senses marine mammals use to gather information about their environment and communicate with conspecifics. Although empirical information on the relationship between sensory impairment (TTS, PTS, and acoustic masking) on marine mammals remains limited, it seems reasonable to assume that reducing an animal's ability to gather information about its environment and to communicate with other members of its species would be stressful for animals that use hearing as their primary sensory mechanism. Therefore, we assume that acoustic exposures sufficient to trigger onset PTS or TTS would be accompanied by physiological stress responses because terrestrial animals exhibit those responses under similar conditions (NRC, 2003). More importantly, marine mammals might experience stress responses at received levels lower than those necessary to trigger onset TTS. Based on empirical studies of the time

required to recover from stress responses (Moberg, 2000), NMFS also assumes that stress responses could persist beyond the time interval required for animals to recover from TTS and might result in pathological and pre-pathological states that would be as significant as behavioral responses to TTS.

Behavioral Disturbance

Behavioral responses to sound are highly variable and context-specific. Many different variables can influence an animal's perception of and response to (in both nature and magnitude) an acoustic event. An animal's prior experience with a sound or sound source affects whether it is less likely (habituation) or more likely (sensitization) to respond to certain sounds in the future (animals can also be innately pre-disposed to respond to certain sounds in certain ways) (Southall *et al.,* 2007). Related to the sound itself, the perceived nearness of the sound, bearing of the sound (approaching vs. retreating), similarity of the sound to biologically relevant sounds in the animal's environment (*i.e.,* calls of predators, prey, or conspecifics), and familiarity of the sound may affect the way an animal responds to the sound (Southall *et al.,* 2007). Individuals (of different age, gender, reproductive status, etc.) among most populations will have variable hearing capabilities, and differing behavioral sensitivities to sounds that will be affected by prior conditioning, experience, and current activities of those individuals. Often, specific acoustic features of the sound and contextual variables (*i.e.,* proximity, duration, or recurrence of the sound or the current behavior that the marine mammal is engaged in or its prior experience), as well as entirely separate factors such as the physical presence of a nearby vessel, may be more relevant to the animal's response than the received level alone.

Exposure of marine mammals to sound sources can result in, but is not limited to, no response or any of the following observable responses: Increased alertness; orientation or attraction to a sound source; vocal modifications; cessation of feeding; cessation of social interaction; alteration of movement or diving behavior; avoidance; habitat abandonment (temporary or permanent); and, in severe cases, panic, flight, stampede, or stranding, potentially resulting in death (Southall *et al.,* 2007). A review of marine mammal responses to anthropogenic sound was first conducted by Richardson (1995). A more recent review (Nowacek *et al.,* 2007) addresses studies conducted since 1995 and focuses on observations where the received sound level of the exposed marine mammal(s) was known or could be estimated. The following subsections provide examples of behavioral responses that provide an idea of the variability in behavioral responses that would be expected given the differential sensitivities of marine mammal species to sound and the wide range of potential acoustic sources to which a marine mammal may be exposed. Estimates of the types of behavioral responses that could occur for a given sound exposure should be determined from the literature that is available for each species, or extrapolated from closely related species when no information exists.

Alteration of Diving or Movement—Changes in dive behavior can vary widely. They may consist of increased or decreased dive times and surface intervals as well as changes in the rates of ascent and descent during a dive. Variations in dive behavior may reflect interruptions in biologically significant activities (*e.g.,* foraging) or they may be of little biological significance. Variations in dive behavior may also expose an animal to potentially harmful conditions (*e.g.,* increasing the chance of ship-strike) or may serve as an avoidance response that enhances survivorship. The impact of a variation in diving resulting from an acoustic exposure depends on what the animal is doing at the time of the exposure and the type and magnitude of the response.

Nowacek *et al.* (2004) reported disruptions of dive behaviors in foraging North Atlantic right whales when exposed to an alerting stimulus, a reaction, they noted, that could lead to an increased likelihood of ship strike. However, the whales did not respond to playbacks of either right whale social sounds or vessel noise, highlighting the importance of the sound characteristics in producing a behavioral reaction. Conversely, Indo-Pacific humpback dolphins have been observed to dive for longer periods of time in areas where vessels were present and/or approaching (Ng and Leung, 2003). In both of these studies, the influence of the sound exposure cannot be decoupled from the physical presence of a surface vessel, thus complicating interpretations of the relative contribution of each stimulus to the response. Indeed, the presence of surface vessels, their approach, and the speed of approach, all seemed to be significant factors in the response of the Indo-Pacific humpback dolphins (Ng and Leung, 2003). Low-frequency signals of the Acoustic Thermometry of Ocean Climate (ATOC) sound source were not found to affect dive times of humpback whales in Hawaiian waters (Frankel and Clark, 2000) or to overtly affect elephant seal dives (Costa *et al.,* 2003). They did, however, produce subtle effects that varied in direction and degree among the individual seals, illustrating the varied nature of behavioral effects and consequent difficulty in defining and predicting them.

Foraging—Disruption of feeding behavior can be difficult to correlate with anthropogenic sound exposure, so it is usually inferred by observed displacement from known foraging areas, the appearance of secondary indicators (*e.g.,* bubble nets or sediment plumes), or changes in dive behavior. Noise from seismic surveys was not found to impact the feeding behavior of western gray whales off the coast of Russia (Yazvenko *et al.,* 2007) and sperm whales engaged in foraging dives did not abandon dives when exposed to distant signatures of seismic airguns (Madsen *et al.,* 2006). Balaenopterid whales exposed to moderate SURTASS LFA demonstrated no variation in foraging activity (Croll *et al.,* 2001), whereas five out of six North Atlantic right whales exposed to an acoustic alarm interrupted their foraging dives (Nowacek *et al.,* 2004). Although the received sound pressure level was similar in the latter two studies, the frequency, duration, and temporal pattern of signal presentation were different. These factors, as well as differences in species sensitivity, are likely contributing factors to the differential response. A determination of whether foraging disruptions incur fitness consequences will require information on or estimates of the energetic requirements of the individuals and the relationship between prey availability, foraging effort and success, and the life history stage of the animal.

Brownell (2004) reported the behavioral responses of western gray whales off the northeast coast of Sakhalin Island to sounds produced by local seismic activities. In 1997, the gray whales responded to seismic activities by changing their swimming speed and orientation, respiration rates, and distribution in waters around the seismic surveys. In 2001, seismic activities were conducted in a known foraging ground and the whales left the area and moved farther south to the Sea of Okhotsk. They only returned to the foraging ground several days after the seismic activities stopped. The potential fitness consequences of displacing these

whales, especially mother-calf pairs and "skinny whales," outside of their normal feeding area are not known; however, because gray whales, like other large whales, must gain enough energy during the summer foraging season to last them the entire year, sounds or other stimuli that cause them to abandon a foraging area for several days could disrupt their energetics and force them to make trade-offs like delaying their migration south, delaying reproduction, reducing growth, or migrating with reduced energy reserves.

Social Relationships—Social interactions between mammals can be affected by noise via the disruption of communication signals or by the displacement of individuals. Sperm whales responded to military sonar, apparently from a submarine, by dispersing from social aggregations, moving away from the sound source, remaining relatively silent, and becoming difficult to approach (Watkins *et al.,* 1985). In contrast, sperm whales in the Mediterranean that were exposed to submarine sonar continued calling (J. Gordon pers. comm. cited in Richardson *et al.,* 1995). Social disruptions must be considered, however, in context of the relationships that are affected. While some disruptions may not have deleterious effects, long-term or repeated disruptions of mother/calf pairs or interruption of mating behaviors have the potential to affect the growth and survival or reproductive effort/success of individuals, respectively.

Vocalizations (also see Masking Section)—Vocal changes in response to anthropogenic noise can occur across the repertoire of sound production modes used by marine mammals, such as whistling, echolocation click production, calling, and singing. Changes may result in response to a need to compete with an increase in background noise or may reflect an increased vigilance or startle response. For example, in the presence of low-frequency active sonar, humpback whales have been observed to increase the length of their "songs" (Miller *et al.,* 2000; Fristrup *et al.,* 2003), possibly due to the overlap in frequencies between the whale song and the low-frequency active sonar. A similar compensatory effect for the presence of low-frequency vessel noise has been suggested for right whales; right whales have been observed to shift the frequency content of their calls upward while reducing the rate of calling in areas of increased anthropogenic noise (Parks *et al.,* 2007). Killer whales off the northwestern coast of the United States have been observed to increase the duration of primary calls once a threshold in observing vessel density (*e.g.,* whale watching) was reached, which has been suggested as a response to increased masking noise produced by the vessels (Foote *et al.,* 2004). In contrast, both sperm and pilot whales potentially ceased sound production during the Heard Island feasibility test (Bowles *et al.,* 1994), although it cannot be absolutely determined whether the inability to acoustically detect the animals was due to the cessation of sound production or the displacement of animals from the area.

Avoidance—Avoidance is the displacement of an individual from an area as a result of the presence of a sound. Richardson *et al.* (1995) noted that avoidance reactions are the most obvious manifestations of disturbance in marine mammals. Avoidance is qualitatively different from the flight response, but also differs in the magnitude of the response (*i.e.,* directed movement, rate of travel, etc.). Oftentimes, avoidance is temporary and animals return to the area once the noise has ceased. However, longer term displacement is possible and can lead to changes in abundance or distribution patterns of the species in the affected region if animals do not become acclimated to the presence of the chronic sound (Blackwell *et al.,* 2004; Bejder *et al.,* 2006; Teilmann *et al.,* 2006). Acute avoidance responses have been observed in captive porpoises and pinnipeds exposed to a number of different sound sources (Kastelein *et al.,* 2001; Finneran *et al.,* 2003; Kastelein *et al.,* 2006a; Kastelein *et al.,* 2006b). Short-term avoidance of seismic surveys, low-frequency emissions, and acoustic deterrents have also been noted in wild populations of odontocetes (Bowles *et al.,* 1994; Goold, 1996, 1998; Stone *et al.,* 2000; Morton and Symonds, 2002) and to some extent in mysticetes (Gailey *et al.,* 2007), while long-term or repetitive/chronic displacement for some dolphin groups and for manatees has been suggested to result from the presence of chronic vessel noise (Haviland-Howell *et al.,* 2007; Miksis-Olds *et al.,* 2007).

Maybaum (1993) conducted sound playback experiments to assess the effects of mid-frequency active sonar on humpback whales in Hawaiian waters. Specifically, she exposed focal pods to sounds of a 3.3-kHz sonar pulse, a sonar frequency sweep from 3.1 to 3.6 kHz, and a control (blank) tape while monitoring the behavior, movement, and underwater vocalizations. The two types of sonar signals (which both contained both mid- and low-frequency components) differed in their effects on the humpback whales, but both resulted in avoidance behavior. The whales responded to the pulse by increasing their distance from the sound source and responded to the frequency sweep by increasing their swimming speeds and track linearity. In the Caribbean, sperm whales avoided exposure to mid-frequency submarine sonar pulses, in the range of 1000 Hz to 10,000 Hz (IWC 2005).

Kvadsheim *et al.,* (2007) conducted a controlled exposure experiment in which killer whales (*Orcinus orca*) fitted with D-tags were exposed to mid-frequency active sonar (Source A: a 1.0 s upsweep 209 dB @ 1–2 kHz every 10 seconds for 10 minutes; Source B: with a 1.0 s upsweep 197 dB @ 6–7 kHz every 10 s for 10 min). When exposed to Source A, a tagged whale and the group it was traveling with did not appear to avoid the source. When exposed to Source B, the tagged whales along with other whales that had been carousel feeding, ceased feeding during the approach of the sonar and moved rapidly away from the source. When exposed to Source B, Kvadsheim and his co-workers reported that a tagged killer whale seemed to try to avoid further exposure to the sound field by the following behaviors: immediately swimming away (horizontally) from the source of the sound; engaging in a series of erratic and frequently deep dives that seemed to take it below the sound field; or swimming away while engaged in a series of erratic and frequently deep dives. Although the sample sizes in this study are too small to support statistical analysis, the behavioral responses of the orcas were consistent with the results of other studies.

In 2007, the first in a series of behavioral response studies conducted by NMFS and other scientists showed one beaked whale (*Mesoplodon densirostris*) responding to an MFAS playback. The BRS–07 cruise report indicates that the playback began when the tagged beaked whale was vocalizing at depth (at the deepest part of a typical feeding dive), following a previous control with no sound exposure. The whale appeared to stop clicking significantly earlier than usual, when exposed to mid-frequency signals in the 130–140 dB (rms) received level range. After a few more minutes of the playback, when the received level reached a maximum of 140–150 dB, the whale ascended on the slow side of normal ascent rates with a longer than normal ascent, at which point the exposure was terminated. The BRS–07 cruise report notes that the results are from a single experiment and that a greater sample size is needed before

robust and definitive conclusions can be drawn (NMFS, 2008a).

The preliminary BRS–08 cruise report has been published. Although the extensive data sets emerging from this study will require detailed analysis, researchers have identified an emerging pattern of responses. For example, Blainville's beaked whales—a resident species within the study area—appear to be sensitive to noise at levels well below expected TTS (~160 dB re1μPa). This sensitivity is manifest by an adaptive movement away from a sound source. This response was observed irrespective of whether the signal transmitted was within the band width of MFAS, which suggests that beaked whales may not respond to the specific sound signatures. Instead, they may be sensitive to any pulsed sound from a point source in this frequency range. The response to such stimuli appears to involve maximizing the distance from the sound source (NMFS, 2008b).

Flight Response—A flight response is a dramatic change in normal movement to a directed and rapid movement away from the perceived location of a sound source. Relatively little information on flight responses of marine mammals to anthropogenic signals exist, although observations of flight responses to the presences of predators have occurred (Connor and Heithaus, 1996). Flight responses have been speculated as being a component of marine mammal strandings associated with MFAS activities (Evans and England, 2001). If marine mammals respond to Navy vessels that are transmitting active sonar in the same way that they might respond to a predator, their probability of flight responses should increase when they perceive that Navy vessels are approaching them directly, because a direct approach may convey detection and intent to capture (Burger and Gochfeld, 1981, 1990; Cooper, 1997, 1998). The probability of avoidance and flight responses should also increase as received levels of active sonar increase (and the ship is, therefore, closer) and as ship speeds increase (that is, as approach speeds increase). For example, the probability of flight responses in Dall's sheep *Ovis dalli dalli* (Frid 2001a, 2001b), ringed seals *Phoca hispida* (Born *et al.,* 1999), Pacific brant (*Branta bernicl nigricans*), and Canada geese (*B. Canadensis*) increased as a helicopter or fixed-wing aircraft more directly approached groups of these animals (Ward *et al.,* 1999). Bald eagles (*Haliaeetus leucocephalus*) perched on trees alongside a river were also more likely to flee from a paddle raft when their perches were closer to the river or were closer to the ground (Steidl and Anthony, 1996).

Breathing—Variations in respiration naturally occur with different behaviors. Variations in respiration rate as a function of acoustic exposure can co-occur with other behavioral reactions, such as a flight response or an alteration in diving. However, respiration rates in and of themselves may be representative of annoyance or an acute stress response. Mean exhalation rates of gray whales at rest and while diving were found to be unaffected by seismic surveys conducted adjacent to foraging grounds (Gailey *et al.,* 2007). Studies with captive harbor porpoises showed increased respiration rates upon introduction of acoustic alarms (Kastelein *et al.,* 2001; Kastelein *et al.,* 2006a) and emissions for underwater data transmission (Kastelein *et al.,* 2005). However, exposing the same acoustic alarm to a striped dolphin under the same conditions did not elicit a response (Kastelein *et al.,* 2006a), again highlighting the importance of understanding species differences in the tolerance of underwater noise when determining the potential for impacts resulting from anthropogenic sound exposure.

Continued Pre-disturbance Behavior and Habituation—Under some circumstances, some of the individual marine mammals that are exposed to active sonar transmissions will continue their normal behavioral activities; in other circumstances, individual animals will respond to sonar transmissions at lower received levels and move to avoid additional exposure or exposures at higher received levels (Richardson *et al.,* 1995).

It is difficult to distinguish between animals that continue their pre-disturbance behavior without stress responses, animals that continue their behavior but experience stress responses (that is, animals that cope with disturbance), and animals that habituate to disturbance (that is, they may have experienced low-level stress responses initially, but those responses abated over time). Watkins (1986) reviewed data on the behavioral reactions of fin, humpback, right and minke whales that were exposed to continuous, broadband low-frequency shipping and industrial noise in Cape Cod Bay. He concluded that underwater sound was the primary cause of behavioral reactions in these species of whales and that the whales responded behaviorally to acoustic stimuli within their respective hearing ranges. Watkins also noted that whales showed the strongest behavioral reactions to sounds in the 15 Hz to 28 kHz range, although negative reactions (avoidance, interruptions in vocalizations, etc.) were generally associated with sounds that were either unexpected, too loud, suddenly louder or different, or perceived as being associated with a potential threat (such as an approaching ship on a collision course). In particular, whales seemed to react negatively when they were within 100 m of the source or when received levels increased suddenly in excess of 12 dB relative to ambient sounds. At other times, the whales ignored the source of the signal and all four species habituated to these sounds.

Nevertheless, Watkins concluded that whales ignored most sounds in the background of ambient noise, including sounds from distant human activities even though these sounds may have had considerable energies at frequencies well within the whales' range of hearing. Further, he noted that of the whales observed, fin whales were the most sensitive of the four species, followed by humpback whales; right whales were the least likely to be disturbed and generally did not react to low-amplitude engine noise. By the end of his period of study, Watkins (1986) concluded that fin and humpback whales have generally habituated to the continuous and broad-band noise of Cape Cod Bay while right whales did not appear to change their response. As mentioned above, animals that habituate to a particular disturbance may have experienced low-level stress responses initially, but those responses abated over time. In most cases, this likely means a lessened immediate potential effect from a disturbance; however, concern exists where the habituation occurs in a potentially more harmful situation, for example: animals may become more vulnerable to vessel strikes once they habituate to vessel traffic (Swingle *et al.,* 1993; Wiley *et al.,* 1995).

Aicken *et al.,* (2005) monitored the behavioral responses of marine mammals to a new low-frequency active sonar system that was being developed for use by the British Navy. During those trials, fin whales, sperm whales, Sowerby's beaked whales, long-finned pilot whales (*Globicephala melas*), Atlantic white-sided dolphins, and common bottlenose dolphins were observed and their vocalizations were recorded. These monitoring studies detected no evidence of behavioral responses that the investigators could attribute to exposure to the low-frequency active sonar during these trials.

Behavioral Responses—Southall *et al.* (2007) reports the results of the efforts of a panel of experts in acoustic research

from behavioral, physiological, and physical disciplines that convened and reviewed the available literature on marine mammal hearing and physiological and behavioral responses to human-made sound with the goal of proposing exposure criteria for certain effects. This peer-reviewed compilation of literature is very valuable, though Southall *et al.* (2007) note that not all data are equal, some have poor statistical power, insufficient controls, and/or limited information on received levels, background noise, and other potentially important contextual variables. Such data were reviewed and sometimes used for qualitative illustration, but were not included in the quantitative analysis for the criteria recommendations. All of the studies considered, however, contain an estimate of the received sound level when the animal exhibited the indicated response.

In the Southall *et al.* (2007) publication, for the purposes of analyzing responses of marine mammals to anthropogenic sound and developing criteria, the authors differentiate between single pulse sounds, multiple pulse sounds, and non-pulse sounds. MFAS/HFAS is considered a non-pulse sound. Southall *et al.* (2007) summarize the studies associated with low-frequency, mid-frequency, and high-frequency cetacean and pinniped responses to non-pulse sounds, based strictly on received level, in Appendix C of their article (incorporated by reference and summarized in the three paragraphs below).

The studies that address responses of low-frequency cetaceans to non-pulse sounds include data gathered in the field and related to several types of sound sources (of varying similarity to MFAS/HFAS), including: Vessel noise, drilling and machinery playback, low-frequency M-sequences (sine wave with multiple phase reversals) playback, tactical low-frequency active sonar playback, drill ships, Acoustic Thermometry of Ocean Climate (ATOC) source, and non-pulse playbacks. These studies generally indicate no (or very limited) responses to received levels in the 90 to 120 dB re: 1 μPa range and an increasing likelihood of avoidance and other behavioral effects in the 120 to 160 dB range. As mentioned earlier, though, contextual variables play a very important role in the reported responses and the severity of effects are not linear when compared to received level. Also, few of the laboratory or field datasets had common conditions, behavioral contexts, or sound sources, so it is not surprising that responses differ.

The studies that address responses of mid-frequency cetaceans to non-pulse sounds include data gathered both in the field and the laboratory and related to several different sound sources (of varying similarity to MFAS/HFAS) including: Pingers, drilling playbacks, ship and ice-breaking noise, vessel noise, Acoustic Harassment Devices (AHDs), Acoustic Deterrent Devices (ADDs), MFAS, and non-pulse bands and tones. Southall *et al.* (2007) were unable to come to a clear conclusion regarding the results of these studies. In some cases, animals in the field showed significant responses to received levels between 90 and 120 dB, while in other cases these responses were not seen in the 120 to 150 dB range. The disparity in results was likely due to contextual variation and the differences between the results in the field and laboratory data (animals typically responded at lower levels in the field).

The studies that address responses of high-frequency cetaceans to non-pulse sounds include data gathered both in the field and the laboratory and related to several different sound sources (of varying similarity to MFAS/HFAS), including: Pingers, AHDs, and various laboratory non-pulse sounds. All of these data were collected from harbor porpoises. Southall *et al.* (2007) concluded that the existing data indicate that harbor porpoises are likely sensitive to a wide range of anthropogenic sounds at low received levels (~90–120 dB), at least for initial exposures. All recorded exposures above 140 dB induced profound and sustained avoidance behavior in wild harbor porpoises (Southall *et al.,* 2007). Rapid habituation was noted in some but not all studies. There is no data to indicate whether other high-frequency cetaceans are as sensitive to anthropogenic sound as harbor porpoises.

The studies that address the responses of pinnipeds in water to non-pulse sounds include data gathered both in the field and the laboratory and related to several different sound sources (of varying similarity to MFAS/HFAS), including: AHDs, ATOC, various non-pulse sounds used in underwater data communication, underwater drilling, and construction noise. Few studies exist with enough information to include them in the analysis. The limited data suggest that exposures to non-pulse sounds between 90 and 140 dB generally do not result in strong behavioral responses of pinnipeds in water, but no data exist at higher received levels.

In addition to summarizing the available data, the authors of Southall *et al.* (2007) developed a severity scaling system with the intent of ultimately being able to assign some level of biological significance to a response. Following is a summary of their scoring system (a comprehensive list of the behaviors associated with each score may be found in the report):

- 0–3 (Minor and/or brief behaviors) includes, but is not limited to: No response; minor changes in speed or locomotion (but with no avoidance); individual alert behavior; minor cessation in vocal behavior; minor changes in response to trained behaviors (in laboratory)
- 4–6 (Behaviors with higher potential to affect foraging, reproduction, or survival) includes, but is not limited to: Moderate changes in speed, direction, or dive profile; brief shift in group distribution; prolonged cessation or modification of vocal behavior (duration > duration of sound); minor or moderate individual and/or group avoidance of sound; brief cessation of reproductive behavior; or refusal to initiate trained tasks (in laboratory)
- 7–9 (Behaviors considered likely to affect the aforementioned vital rates) includes, but is not limited to: Extensive or prolonged aggressive behavior; moderate, prolonged, or significant separation of females and dependent offspring with disruption of acoustic reunion mechanisms; long-term avoidance of an area; outright panic, stampede, stranding; threatening or attacking sound source (in laboratory)

In Table 6 we have summarized the scores that Southall *et al.* (2007) assigned to the papers that reported behavioral responses of low-frequency cetaceans, mid-frequency cetaceans, and pinnipeds in water to non-pulse sounds. This table is included simply to summarize the findings of the studies and opportunistic observations (all of which were capable of estimating received level) that Southall *et al.* (2007) compiled in an effort to develop acoustic criteria.

BILLING CODE 3510–22–P

	Received RMS Sound Pressure Level (dB re: 1 μPa)											
Response Score	80 to < 90	90 to < 100	100 to < 110	110 to < 120	120 to < 130	130 to < 140	140 to < 150	150 to < 160	160 to < 170	170 to < 180	180 to < 190	190 to <200
9												
8		M	M		M		M				M	M
7						L	L					
6	H	L/H	L/P/H	L/M/H	L/M/H	L	L/H	H	M/H	M		
5			H	H	M							
4				L/M	L/M/P	P	L					
3		M	L/M	L/M	M/P	P						
2			L	L/M	L	L	L					
1			M	M	M							
0	L/H/P	L/H/P	L/M/H	L/M/H/P	L/M/H/P	L	M				M	M

Table 6. Data compiled from three tables from Southall et al. (2007) indicating when marine mammals (low-frequency cetaceans = L, mid-frequency cetaceans = M, high frequency cetaceans = H, and pinnipeds = P) were reported as having a behavioral response of the indicated severity to a non-pulse sound of the indicated received level. As discussed in the text, responses are highly variable and context specific.

BILLING CODE 3510–22–C

Potential Effects of Behavioral Disturbance

The different ways that marine mammals respond to sound are sometimes indicators of the ultimate effect that exposure to a given stimulus will have on the well-being (survival, reproduction, etc.) of an animal. There are few quantitative marine mammal data relating the exposure of marine mammals to sound to effects on reproduction or survival, though data exist for terrestrial species to which we can draw comparisons for marine mammals. Several authors have reported that disturbance stimuli cause animals to abandon nesting and foraging sites (Sutherland and Crockford, 1993), cause animals to increase their activity levels and suffer premature deaths or reduced reproductive success when their energy expenditures exceed their energy budgets (Daan *et al.,* 1996; Feare 1976; Giese 1996; Mullner *et al.,* 2004; Waunters *et al.,* 1997), or cause animals to experience higher predation rates when they adopt risk-prone foraging or migratory strategies (Frid and Dill, 2002). Each of these studies addressed the consequences of animals shifting from one behavioral state (*e.g.,* resting or foraging) to another behavioral state (*e.g.,* avoidance or escape behavior) because of human disturbance or disturbance stimuli.

One consequence of behavioral avoidance results from the changes in energetics of marine mammals because of the energy required to avoid surface vessels or the sound field associated with active sonar (Frid and Dill, 2002). Most animals can avoid that energetic cost by swimming away at slow speeds or speeds that minimize the cost of transport (Miksis-Olds, 2006), as has been demonstrated in Florida manatees (Hartman, 1979; Miksis-Olds, 2006).

Those costs increase, however, when animals shift from a resting state, which is designed to conserve an animal's energy, to an active state that consumes energy the animal would have conserved had it not been disturbed. Marine mammals that have been disturbed by anthropogenic noise and vessel approaches are commonly reported to shift from resting behavioral states to active behavioral states, which would imply that they incur an energy cost. Morete *et al.,* (2007) reported that undisturbed humpback whale cows that were accompanied by their calves were frequently observed resting while their calves circled them (milling). When vessels approached, the amount of time cows and calves spent resting and milling declined significantly, respectively. These results are similar to those reported by Scheidat *et al.* (2004) for the humpback whales they observed off the coast of Ecuador.

Constantine and Brunton (2001) reported that bottlenose dolphins in the Bay of Islands, New Zealand only engaged in resting behavior 5 percent of the time when vessels were within 300 m compared with 83 percent of the time when vessels were not present. Miksis-Olds (2006) and Miksis-Olds *et al.* (2005) reported that Florida manatees in Sarasota Bay, Florida, reduced the amount of time they spent milling and increased the amount of time they spent feeding when background noise levels increased. Although the acute costs of these changes in behavior are not likely to exceed an animal's ability to compensate, the chronic costs of these behavioral shifts are uncertain.

Attention is the cognitive process of selectively concentrating on one aspect of an animal's environment while ignoring other things (Posner, 1994). Because animals (including humans) have limited cognitive resources, there is a limit to how much sensory information they can process at any time. The phenomenon called "attentional capture" occurs when a stimulus (usually a stimulus that an animal is not concentrating on or attending to) "captures" an animal's attention. This shift in attention can occur consciously or unconsciously (*e.g.,* when an animal hears sounds that it associates with the approach of a predator) and the shift in attention can be sudden (Dukas, 2002; van Rij, 2007). Once a stimulus has captured an animal's attention, the animal can respond by ignoring the stimulus, assuming a "watch and wait" posture, or treating the stimulus as a disturbance and responding accordingly, which includes scanning for the source of the stimulus or "vigilance" (Cowlishaw *et al.,* 2004).

Vigilance is normally an adaptive behavior that helps animals determine the presence or absence of predators, assess their distance from conspecifics, or attend to cues from prey (Bednekoff and Lima, 1998; Treves, 2000). Despite those benefits, however, vigilance has a cost of time; when animals focus their attention on specific environmental cues, they are not attending to other activities, such a foraging. These costs have been documented best in foraging animals, where vigilance has been shown to substantially reduce feeding rates (Saino, 1994; Beauchamp and Livoreil, 1997; Fritz *et al.,* 2002). Animals will spend more time being vigilant, which may translate to less time foraging or resting, when disturbance stimuli approach them more directly, remain at closer distances, have a greater group size (*e.g.,* multiple surface vessels), or when they co-occur with times that an animal perceives increased risk (*e.g.,* when they are giving birth or accompanied by a calf). Most of the published literature, however, suggests that direct approaches will increase the amount of time animals will dedicate to being vigilant. For example, bighorn sheep and Dall's sheep dedicated more time to being vigilant, and less time resting or foraging, when aircraft made direct

approaches over them (Frid, 2001; Stockwell *et al.,* 1991).

Several authors have established that long-term and intense disturbance stimuli can cause population declines by reducing the physical condition of individuals that have been disturbed, followed by reduced reproductive success, reduced survival, or both (Daan *et al.,* 1996; Madsen, 1994; White, 1983). For example, Madsen (1994) reported that pink-footed geese (*Anser brachyrhynchus*) in undisturbed habitat gained body mass and had about a 46 percent reproductive success rate compared with geese in disturbed habitat (being consistently scared off the fields on which they were foraging) which did not gain mass and had a 17 percent reproductive success rate. Similar reductions in reproductive success have been reported for mule deer (*Odocoileus hemionus*) disturbed by all-terrain vehicles (Yarmoloy *et al.,* 1988), caribou disturbed by seismic exploration blasts (Bradshaw *et al.,* 1998), and caribou disturbed by low-elevation military jet flights (Luick *et al.,* 1996; Harrington and Veitch, 1992). Similarly, a study of elk (*Cervus elaphus*) that were disturbed experimentally by pedestrians concluded that the ratio of young to mothers was inversely related to disturbance rate (Phillips and Alldredge, 2000).

The primary mechanism by which increased vigilance and disturbance appear to affect the fitness of individual animals is by disrupting an animal's time budget and, as a result, reducing the time they might spend foraging and resting (which increases an animal's activity rate and energy demand). For example, a study of grizzly bears (*Ursus horribilis*) reported that bears disturbed by hikers reduced their energy intake by an average of 12 kcal/min (50.2×10^3 kJ/min), and spent energy fleeing or acting aggressively toward hikers (White *et al.,* 1999). Alternately, Ridgway *et al.* (2006), reported that increased vigilance in bottlenose dolphins exposed to sound over a five-day period did not cause any sleep deprivation or stress effects such as changes in cortisol or epinephrine levels.

On a related note, many animals perform vital functions, such as feeding, resting, traveling, and socializing, on a diel cycle (24-hr cycle). Behavioral reactions to noise exposure (such as disruption of critical life functions, displacement, or avoidance of important habitat) are more likely to be significant if they last more than one diel cycle or recur on subsequent days (Southall *et al.,* 2007). Consequently, a behavioral response lasting less than one day and not recurring on subsequent days is not considered particularly severe unless it could directly affect reproduction or survival (Southall *et al.,* 2007).

Stranding and Mortality

When a live or dead marine mammal swims or floats onto shore and becomes "beached" or incapable of returning to sea, the event is termed a "stranding" (Geraci *et al.,* 1999; Perrin and Geraci, 2002; Geraci and Lounsbury, 2005; NMFS, 2007). The legal definition for a stranding within the United States is that "(A) a marine mammal is dead and is (i) on a beach or shore of the United States; or (ii) in waters under the jurisdiction of the United States (including any navigable waters); or (B) a marine mammal is alive and is (i) on a beach or shore of the United States and is unable to return to the water; (ii) on a beach or shore of the United States and, although able to return to the water, is in need of apparent medical attention; or (iii) in the waters under the jurisdiction of the United States (including any navigable waters), but is unable to return to its natural habitat under its own power or without assistance" (16 U.S.C. 1421h).

Marine mammals are known to strand for a variety of reasons, such as infectious agents, biotoxicosis, starvation, fishery interaction, ship strike, unusual oceanographic or weather events, sound exposure, or combinations of these stressors sustained concurrently or in series. However, the cause or causes of most strandings are unknown (Geraci *et al.,* 1976; Eaton, 1979; Odell *et al.,* 1980; Best, 1982). Numerous studies suggest that the physiology, behavior, habitat relationships, age, or condition of cetaceans may cause them to strand or might pre-dispose them to strand when exposed to another phenomenon. These suggestions are consistent with the conclusions of numerous other studies that have demonstrated that combinations of dissimilar stressors commonly combine to kill an animal or dramatically reduce its fitness, even though one exposure without the other does not produce the same result (Chroussos, 2000; Creel, 2005; DeVries *et al.,* 2003; Fair and Becker, 2000; Foley *et al.,* 2001; Moberg, 2000; Relyea, 2005a, 2005b; Romero, 2004; Sih *et al.,* 2004).

Several sources have published lists of mass stranding events of cetaceans in an attempt to identify relationships between those stranding events and military active sonar (Hildebrand, 2004; IWC, 2005; Taylor *et al.,* 2004). For example, based on a review of stranding records between 1960 and 1995, the International Whaling Commission (2005) identified ten mass stranding events of Cuvier's beaked whales that had been reported and one mass stranding of four Baird's beaked whale (*Berardius bairdii*). The IWC concluded that, out of eight stranding events reported from the mid-1980s to the summer of 2003, seven had been coincident with the use of MFAS, one had been associated with the use of tactical low-frequency sonar, and the remaining stranding event had been associated with the use of seismic airguns.

Most of the stranding events reviewed by the IWC involved beaked whales. A mass stranding of Cuvier's beaked whales in the eastern Mediterranean Sea occurred in 1996 (Franzis, 1998) and mass stranding events involving Gervais' beaked whales, Blainville's beaked whales, and Cuvier's beaked whales occurred off the coast of the Canary Islands in the late 1980s (Simmonds and Lopez-Jurado, 1991). The stranding events that occurred in the Canary Islands and Kyparissiakos Gulf in the late 1990s and the Bahamas in 2000 have been the most intensively-studied mass stranding events and have been associated with naval exercises involving the use of MFAS.

Strandings Associated With MFAS

Over the past 12 years, there have been five stranding events coincident with military mid-frequency active sonar use in which exposure to sonar is believed by NMFS and the Navy to have been a contributing factor: Greece (1996); the Bahamas (2000); Madeira (2000); Canary Islands (2002); and Spain (2006). Additionally, in 2004, during the 2008 Rim of the Pacific (RIMPAC) exercises, between 150 and 200 usually pelagic melon-headed whales occupied the shallow waters of the Hanalei Bay, Kaua'i, Hawaii for over 28 hours. NMFS determined that the mid-frequency sonar was a plausible, if not likely, contributing factor in what may have been a confluence of events that led to the Hanalei Bay stranding. A number of other stranding events coincident with the operation of MFAS including the death of beaked whales or other species (minke whales, dwarf sperm whales, pilot whales) have been reported; however, the majority have not been investigated to the degree necessary to determine the cause of the stranding and only one of these exercises was conducted by the U.S. Navy.

Greece (1996)

Twelve Cuvier's beaked whales stranded atypically (in both time and space) along a 38.2-km strand of the

coast of the Kyparissiakos Gulf on May 12 and 13, 1996 (Frantzis, 1998). From May 11 through May 15, the NATO research vessel, *Alliance,* was conducting active sonar tests with signals of 600 Hz and 3 kHz and source levels of 228 and 226 dB re: 1μPa, respectively (D'Amico and Verboom, 1998; D'Spain *et al.,* 2006). The timing and location of the testing encompassed the time and location of the whale strandings (Frantzis, 1998).

Necropsies of eight of the animals were performed but were limited to basic external examination and sampling of stomach contents, blood, and skin. No ears or organs were collected, and no histological samples were preserved. No apparent abnormalities or wounds were found (Frantzis, 2004). Examination of photos of the animals, taken soon after their death, revealed that the eyes of at least four of the individuals were bleeding. Photos were taken soon after their death (Frantzis, 2004). Stomach contents contained the flesh of cephalopods, indicating that feeding had recently taken place (Frantzis, 1998).

All available information regarding the conditions associated with this stranding event were compiled, and many potential causes were examined, including major pollution events, prominent tectonic activity, unusual physical or meteorological events, magnetic anomalies, epizootics, and conventional military activities (International Council for the Exploration of the Sea, 2005a). However, none of these potential causes coincided in time or space with the mass stranding, or could explain its characteristics (International Council for the Exploration of the Sea, 2005a). The robust condition of the animals, plus the recent stomach contents, is inconsistent with pathogenic causes (Frantzis, 2004). In addition, environmental causes can be ruled out as there were no unusual environmental circumstances or events before or during this time period and within the general proximity (Frantzis, 2004).

Because of the rarity of this mass stranding of Cuvier's beaked whales in the Kyparissiakos Gulf (first one in history), the probability for the two events (the military exercises and the strandings) to coincide in time and location, while being independent of each other, was thought to be extremely low (Frantzis, 1998). However, because full necropsies had not been conducted, and no abnormalities were noted, the cause of the strandings could not be precisely determined (Cox *et al.,* 2006). A Bioacoustics Panel convened by NATO concluded that the evidence available did not allow them to accept or reject sonar exposures as a causal agent in these stranding events. Their official finding was: "An acoustic link can neither be clearly established, nor eliminated as a direct or indirect cause for the May 1996 strandings." The analysis of this stranding event provided support for, but no clear evidence for, the cause-and-effect relationship of active sonar training activities and beaked whale strandings (Cox *et al.,* 2006).

Bahamas (2000)

NMFS and the Navy prepared a joint report addressing the multi-species stranding in the Bahamas in 2000, which took place within 24 hours of U.S. Navy ships using MFAS as they passed through the Northeast and Northwest Providence Channels on March 15 and March 16, 2000. The ships, which operated both AN/SQS–53 and AN/SQS–56, moved through the channel while emitting MFAS pings approximately every 24 seconds. Of the 17 cetaceans that stranded over a 36-hr period (Cuvier's beaked whales, Blainville's beaked whales, minke whales, and a spotted dolphin), seven animals died on the beach (5 Cuvier's beaked whales, 1 Blainville's beaked whale, and the spotted dolphin), while the other ten were returned to the water alive (though their ultimate fate is unknown). As discussed in the Bahamas report (DOC/DON, 2001), there is no likely association between the minke whale and spotted dolphin strandings and the operation of MFAS.

Necropsies were performed on five of the stranded beaked whales. All five necropsied beaked whales were in good body condition, showing no signs of infection, disease, ship strike, blunt trauma, or fishery related injuries, and three still had food remains in their stomachs. Auditory structural damage was discovered in four of the whales, specifically bloody effusions or hemorrhaging around the ears. Bilateral intracochlear and unilateral temporal region subarachnoid hemorrhage, with blood clots in the lateral ventricles, were found in two of the whales. Three of the whales had small hemorrhages in their acoustic fats (located along the jaw and in the melon).

A comprehensive investigation was conducted and all possible causes of the stranding event were considered, whether they seemed likely at the outset or not. Based on the way in which the strandings coincided with ongoing naval activity involving tactical MFAS use, in terms of both time and geography, the nature of the physiological effects experienced by the dead animals, and the absence of any other acoustic sources, the investigation team concluded that MFAS aboard U.S. Navy ships that were in use during the active sonar exercise in question were the most plausible source of this acoustic or impulse trauma to beaked whales. This sound source was active in a complex environment that included the presence of a surface duct, unusual and steep bathymetry, a constricted channel with limited egress, intensive use of multiple, active sonar units over an extended period of time, and the presence of beaked whales that appear to be sensitive to the frequencies produced by these active sonars. The investigation team concluded that the cause of this stranding event was the confluence of the Navy MFAS and these contributory factors working together, and further recommended that the Navy avoid operating MFAS in situations where these five factors would be likely to occur. This report does not conclude that all five of these factors must be present for a stranding to occur, nor that beaked whales are the only species that could potentially be affected by the confluence of the other factors. Based on this, NMFS believes that the operation of MFAS in situations where surface ducts exist, or in marine environments defined by steep bathymetry and/or constricted channels may increase the likelihood of producing a sound field with the potential to cause cetaceans (especially beaked whales) to strand, and therefore, suggests the need for increased vigilance while operating MFAS in these areas, especially when beaked whales (or potentially other deep divers) are likely present.

Madeira, Spain (2000)

From May 10 to May 14, 2000, three Cuvier's beaked whales were found atypically stranded on two islands in the Madeira archipelago, Portugal (Cox *et al.,* 2006). A fourth animal was reported floating in the Madeiran waters by fishermen but did not come ashore (Woods Hole Oceanographic Institution, 2005). Joint NATO amphibious training peacekeeping exercises, involving participants from 17 countries and 80 warships, took place in Portugal between May 2 and May 15, 2000.

The bodies of the three stranded whales were examined post mortem (Woods Hole Oceanographic Institution, 2005), though only one of the stranded whales was fresh enough (24 hours after stranding) to be necropsied (Cox *et al.,* 2006). Results from the necropsy revealed evidence of hemorrhage and congestion in the right lung and both kidneys (Cox *et al.,* 2006). There was also evidence of intercochlear and

intracranial hemorrhage similar to that which was observed in the whales that stranded in the Bahamas event (Cox *et al.,* 2006). There were no signs of blunt trauma, and no major fractures (Woods Hole Oceanographic Institution, 2005). The cranial sinuses and airways were found to be clear with little or no fluid deposition, which may indicate good preservation of tissues (Woods Hole Oceanographic Institution, 2005).

Several observations on the Madeira stranded beaked whales, such as the pattern of injury to the auditory system, are the same as those observed in the Bahamas strandings. Blood in and around the eyes, kidney lesions, pleural hemorrhages, and congestion in the lungs are particularly consistent with the pathologies from the whales stranded in the Bahamas, and are consistent with stress and pressure-related trauma. The similarities in pathology and stranding patterns between these two events suggest that a similar pressure event may have precipitated or contributed to the strandings at both sites (Woods Hole Oceanographic Institution, 2005).

Even though no definitive causal link can be made between the stranding event and naval exercises, certain conditions may have existed in the exercise area that, in their aggregate, may have contributed to the marine mammal strandings (Freitas, 2004): Exercises were conducted in areas of at least 547 fathoms (1,000 m) depth near a shoreline where there is a rapid change in bathymetry on the order of 547 to 3,281 (1,000 to 6,000 m) fathoms occurring across a relatively short horizontal distance (Freitas, 2004); multiple ships were operating around Madeira, though it is not known if MFAS was used, and the specifics of the sound sources used are unknown (Cox *et al.,* 2006; Freitas, 2004); exercises took place in an area surrounded by land masses separated by less than 35 nm (65 km) and at least 10 nm (19 km) in length, or in an embayment. Exercises involving multiple ships employing MFAS near land may produce sound directed towards a channel or embayment that may cut off the lines of egress for marine mammals (Freitas, 2004).

Canary Islands, Spain (2002)

The southeastern area within the Canary Islands is well known for aggregations of beaked whales due to its ocean depths of greater than 547 fathoms (1,000 m) within a few hundred meters of the coastline (Fernandez *et al.,* 2005). On September 24, 2002, 14 beaked whales were found stranded on Fuerteventura and Lanzarote Islands in the Canary Islands (International Council for Exploration of the Sea, 2005a). Seven whales died, while the remaining seven live whales were returned to deeper waters (Fernandez *et al.,* 2005). Four beaked whales were found stranded dead over the next 3 days either on the coast or floating offshore. These strandings occurred within near proximity of an international naval exercise that utilized MFAS and involved numerous surface warships and several submarines. Strandings began about 4 hours after the onset of MFAS activity (International Council for Exploration of the Sea, 2005a; Fernandez *et al.,* 2005).

Eight Cuvier's beaked whales, one Blainville's beaked whale, and one Gervais' beaked whale were necropsied, six of them within 12 hours of stranding (Fernandez *et al.,* 2005). No pathogenic bacteria were isolated from the carcasses (Jepson *et al.,* 2003). The animals displayed severe vascular congestion and hemorrhage especially around the tissues in the jaw, ears, brain, and kidneys, displaying marked disseminated microvascular hemorrhages associated with widespread fat emboli (Jepson *et al.,* 2003; International Council for Exploration of the Sea, 2005a). Several organs contained intravascular bubbles, although definitive evidence of gas embolism in vivo is difficult to determine after death (Jepson *et al.,* 2003). The livers of the necropsied animals were the most consistently affected organ, which contained macroscopic gas-filled cavities and had variable degrees of fibrotic encapsulation. In some animals, cavitary lesions had extensively replaced the normal tissue (Jepson *et al.,* 2003). Stomachs contained a large amount of fresh and undigested contents, suggesting a rapid onset of disease and death (Fernandez *et al.,* 2005). Head and neck lymph nodes were enlarged and congested, and parasites were found in the kidneys of all animals (Fernandez *et al.,* 2005).

The association of NATO MFAS use close in space and time to the beaked whale strandings, and the similarity between this stranding event and previous beaked whale mass strandings coincident with active sonar use, suggests that a similar scenario and causative mechanism of stranding may be shared between the events. Beaked whales stranded in this event demonstrated brain and auditory system injuries, hemorrhages, and congestion in multiple organs, similar to the pathological findings of the Bahamas and Madeira stranding events. In addition, the necropsy results of the Canary Islands stranding event lead to the hypothesis that the presence of disseminated and widespread gas bubbles and fat emboli were indicative of nitrogen bubble formation, similar to what might be expected in decompression sickness (Jepson *et al.,* 2003; Fernández *et al.,* 2005).

Spain (2006)

The Spanish Cetacean Society reported an atypical mass stranding of four beaked whales that occurred January 26, 2006, on the southeast coast of Spain, near Mojacar (Gulf of Vera) in the western Mediterranean Sea. According to the report, two of the whales were discovered alive on the evening of January 26. Two other whales were discovered during the day on January 27, but had already died. The fourth animal was found dead on the afternoon of January 27, a few kilometers north of the first three animals. Between January 25 and 26, 2006, Standing North Atlantic Treaty Organization (NATO) Response Force Maritime Group Two (five of seven ships including one U.S. ship under NATO Operational Control) had conducted active sonar training against a Spanish submarine within 50 nm (93 km) of the stranding site.

Veterinary pathologists necropsied the two male and two female Cuvier's beaked whales. According to the pathologists, the most likely primary cause of this type of beaked whale mass stranding event was anthropogenic acoustic activities, most probably anti-submarine MFAS used during the military naval exercises. However, no positive acoustic link was established as a direct cause of the stranding. Even though no causal link can be made between the stranding event and naval exercises, certain conditions may have existed in the exercise area that, in their aggregate, may have contributed to the marine mammal strandings (Freitas, 2004): exercises were conducted in areas of at least 547 fathoms (1,000 m) depth near a shoreline where there is a rapid change in bathymetry on the order of 547 to 3,281 fathoms (1,000 to 6,000 m) occurring across a relatively short horizontal distance (Freitas, 2004); multiple ships (in this instance, five) were operating MFAS in the same area over extended periods of time (in this case, 20 hrs) in close proximity; and exercises took place in an area surrounded by landmasses, or in an embayment. Exercises involving multiple ships employing MFAS near land may have produced sound directed towards a channel or embayment that may have cut off the lines of egress for

the affected marine mammals (Freitas, 2004).

Hanalei Bay (2004)

On July 3 and 4, 2004, approximately 150 to 200 melon-headed whales occupied the shallow waters of the Hanalei Bay, Kaua'i, Hawaii for over 28 hrs. Attendees of a canoe blessing observed the animals entering the Bay in a single wave formation at 7 a.m. on July 3, 2004. The animals were observed moving back into the shore from the mouth of the Bay at 9 a.m. The usually pelagic animals milled in the shallow bay and were returned to deeper water with human assistance beginning at 9:30 a.m. on July 4, 2004, and were out of sight by 10:30 a.m.

Only one animal, a calf, was known to have died following this event. The animal was noted alive and alone in the Bay on the afternoon of July 4, 2004 and was found dead in the Bay the morning of July 5, 2004. A full necropsy, magnetic resonance imaging, and computerized tomography examination were performed on the calf to determine the manner and cause of death. The combination of imaging, necropsy and histological analyses found no evidence of infectious, internal traumatic, congenital, or toxic factors. Cause of death could not be definitively determined, but it is likely that maternal separation, poor nutritional condition, and dehydration contributed to the final demise of the animal. Although we do not know when the calf was separated from its mother, the animals' movement into the Bay and subsequent milling and re-grouping may have contributed to the separation or lack of nursing, especially if the maternal bond was weak or this was a primiparous calf.

Environmental factors, abiotic and biotic, were analyzed for any anomalous occurrences that would have contributed to the animals entering and remaining in Hanalei Bay. The Bay's bathymetry is similar to many other sites within the Hawaiian Island chain and dissimilar to sites that have been associated with mass strandings in other parts of the United States. The weather conditions appeared to be normal for that time of year with no fronts or other significant features noted. There was no evidence of unusual distribution, occurrence of predator or prey species, or unusual harmful algal blooms, although Mobley *et al.,* 2007 suggested that the full moon cycle that occurred at that time may have influenced a run of squid into the Bay. Weather patterns and bathymetry that have been associated with mass strandings elsewhere were not found to occur in this instance.

The Hanalei event was spatially and temporally correlated with RIMPAC. Official sonar training and tracking exercises in the Pacific Missile Range Facility (PMRF) warning area did not commence until approximately 8 a.m. on July 3 and were thus ruled out as a possible trigger for the initial movement into the Bay. However, six naval surface vessels transiting to the operational area on July 2 intermittently transmitted active sonar (for approximately 9 hours total from 1:15 p.m. to 12:30 a.m.) as they approached from the south. The potential for these transmissions to have triggered the whales' movement into Hanalei Bay was investigated. Analyses with the information available indicated that animals to the south and east of Kaua'i could have detected active sonar transmissions on July 2, and reached Hanalei Bay on or before 7 a.m. on July 3, 2004. However, data limitations regarding the position of the whales prior to their arrival in the Bay, the magnitude of sonar exposure, behavioral responses of melon-headed whales to acoustic stimuli, and other possible relevant factors preclude a conclusive finding regarding the role of sonar in triggering this event. Propagation modeling suggest that transmissions from sonar use during the July 3 exercise in the PMRF warning area may have been detectable at the mouth of the Bay. If the animals responded negatively to these signals, it may have contributed to their continued presence in the Bay. The U.S. Navy ceased all active sonar transmissions during exercises in this range on the afternoon of July 3, 2004. Subsequent to the cessation of sonar use, the animals were herded out of the Bay.

While causation of this stranding event may never be unequivocally determined, we consider the active sonar transmissions of July 2–3, 2004, a plausible, if not likely, contributing factor in what may have been a confluence of events. This conclusion is based on the following: (1) The evidently anomalous nature of the stranding; (2) its close spatiotemporal correlation with wide-scale, sustained use of sonar systems previously associated with stranding of deep-diving marine mammals; (3) the directed movement of two groups of transmitting vessels toward the southeast and southwest coast of Kauai; (4) the results of acoustic propagation modeling and an analysis of possible animal transit times to the Bay; and (5) the absence of any other compelling causative explanation. The initiation and persistence of this event may have resulted from an interaction of biological and physical factors. The biological factors may have included the presence of an apparently uncommon, deep-diving cetacean species (and possibly an offshore, non-resident group), social interactions among the animals before or after they entered the Bay, and/or unknown predator or prey conditions. The physical factors may have included the presence of nearby deep water, multiple vessels transiting in a directed manner while transmitting active sonar over a sustained period, the presence of surface sound ducting conditions, and/or intermittent and random human interactions while the animals were in the Bay.

A separate event involving melon-headed whales and rough-toothed dolphins took place over the same period of time in the Northern Mariana Islands (Jefferson *et al.,* 2006), which is several thousand miles from Hawaii. Some 500 to 700 melon-headed whales came into Sasanhaya Bay on July 4, 2004 near the island of Rota and then left of their own accord after 5.5 hrs; no known active sonar transmissions occurred in the vicinity of that event. The Rota incident led to scientific debate regarding what, if any, relationship the event had to the simultaneous events in Hawaii and whether they might be related by some common factor (*e.g.,* there was a full moon on July 2, 2004 as well as during other melon-headed whale strandings and nearshore aggregations (Brownell *et al.,* 2009; Lignon *et al.,* 2007; Mobley *et al.,* 2007). Brownell *et al.* (2009) compared the two incidents, along with one other stranding incident at Nuka Hiva in French Polynesia and normal resting behaviors observed at Palmyra Island, in regard to physical features in the areas, melon-headed whale behavior, and lunar cycles. Brownell *et al.,* (2009) concluded that the rapid entry of the whales into Hanalei Bay, their movement into very shallow water far from the 100-m contour, their milling behavior (typical pre-stranding behavior), and their reluctance to leave the bay constituted an unusual event that was not similar to the events that occurred at Rota (but was similar to the events at Palmyra), which appear to be similar to observations of melon-headed whales resting normally at Palmyra Island. Additionally, there was no correlation between lunar cycle and the types of behaviors observed in the Brownell *et al.* (2009) examples.

Association Between Mass Stranding Events and Exposure to MFAS

Several authors have noted similarities between some of these stranding incidents: they occurred in

islands or archipelagoes with deep water nearby, several appeared to have been associated with acoustic waveguides like surface ducting, and the sound fields created by ships transmitting MFAS (Cox *et al.,* 2006, D'Spain *et al.,* 2006). Although Cuvier's beaked whales have been the most common species involved in these stranding events (81 percent of the total number of stranded animals), other beaked whales (including *Mesoplodon europeaus, M. densirostris,* and *Hyperoodon ampullatus*) comprise 14 percent of the total. Other species, such as *Kogia breviceps,* have stranded in association with the operation of MFAS, but in much lower numbers and less consistently than beaked whales.

Based on the evidence available, however, we cannot determine whether (a) Cuvier's beaked whale is more prone to injury from high-intensity sound than other species, (b) their behavioral responses to sound make them more likely to strand, or (c) they are more likely to be exposed to MFAS than other cetaceans (for reasons that remain unknown). Because the association between active sonar exposures and marine mammal mass stranding events is not consistent—some marine mammals strand without being exposed to active sonar and some sonar transmissions are not associated with marine mammal stranding events despite their co-occurrence—other risk factors or a grouping of risk factors probably contribute to these stranding events.

Behaviorally Mediated Responses to MFAS That May Lead to Stranding

Although the confluence of Navy MFAS with the other contributory factors noted in the report was identified as the cause of the 2000 Bahamas stranding event, the specific mechanisms that led to that stranding (or the others) are not understood, and there is uncertainty regarding the ordering of effects that led to the stranding. It is unclear whether beaked whales were directly injured by sound (*e.g.,* acoustically mediated bubble growth, as addressed above) prior to stranding or whether a behavioral response to sound occurred that ultimately caused the beaked whales to be injured and to strand.

Although causal relationships between beaked whale stranding events and active sonar remain unknown, several authors have hypothesized that stranding events involving these species in the Bahamas and Canary Islands may have been triggered when the whales changed their dive behavior in a startled response to exposure, to active sonar, or to further avoid exposure (Cox *et al.,* 2006; Rommel *et al.,* 2006). These authors proposed three mechanisms by which the behavioral responses of beaked whales upon being exposed to active sonar might result in a stranding event. These include the following: Gas bubble formation caused by excessively fast surfacing; remaining at the surface too long when tissues are supersaturated with nitrogen; or diving prematurely when extended time at the surface is necessary to eliminate excess nitrogen. More specifically, beaked whales that occur in deep waters that are in close proximity to shallow waters (*e.g.,* the "canyon areas" that are cited in the Bahamas stranding event; see D'Spain and D'Amico, 2006), may respond to active sonar by swimming into shallow waters to avoid further exposures and strand if they were not able to swim back to deeper waters. Furthermore, beaked whales exposed to active sonar might alter their dive behavior. Changes in dive behavior might cause them to remain at the surface or at depth for extended periods of time which could lead to hypoxia by increasing their oxygen demands or increasing their energy expenditures (*i.e.,* the energy needed to remain at depth, which would increase their oxygen demand). If beaked whales are at depth when they detect a ping from an active sonar transmission and change their dive profile, this could lead to the formation of significant gas bubbles, which could damage multiple organs or interfere with normal physiological function (Cox *et al.,* 2006; Rommel *et al.,* 2006; Zimmer and Tyack, 2007). Baird *et al.* (2005) found that slow ascent rates from deep dives and long periods of time spent within 50 m of the surface were typical for both Cuvier's and Blainville's beaked whales, the two species involved in mass strandings related to naval MFAS. These two behavioral mechanisms may be necessary to purge excessive dissolved nitrogen concentrated in their tissues during their frequent long dives (Baird *et al.,* 2005). Baird *et al.* (2005) further suggests that abnormally rapid ascents or premature dives in response to high-intensity active sonar could indirectly result in physical harm to the beaked whales, through the mechanisms described above (gas bubble formation or non-elimination of excess nitrogen).

Because many species of marine mammals make repetitive and prolonged dives to great depths, it has long been assumed that marine mammals have evolved physiological mechanisms to protect against the effects of rapid and repeated decompressions. Although several investigators have identified physiological adaptations that may protect marine mammals against nitrogen gas supersaturation (*e.g.,* alveolar collapse and elective circulation; Kooyman *et al.,* 1972; Ridgway and Howard, 1979), Ridgway and Howard (1979) reported that bottlenose dolphins (*Tursiops truncatus*) that were trained to dive repeatedly had muscle tissues that were substantially supersaturated with nitrogen gas. Houser *et al.* (2001) used these data to model the accumulation of nitrogen gas within the muscle tissue of other marine mammal species and concluded that cetaceans that dive deep and have slow ascent or descent speeds would have tissues that are more supersaturated with nitrogen gas than other marine mammals. Based on these data, Cox *et al.* (2006) hypothesized that a critical dive sequence might make beaked whales more prone to stranding in response to acoustic exposures. The sequence began with (1) Very deep (up to 2 kilometers) and long (up to 90 minutes) foraging dives with (2) relatively slow, controlled ascents, followed by (3) a series of "bounce" dives between 100 and 400 meters in depth (also see Zimmer and Tyack, 2007). They concluded that acoustic exposures that disrupted any part of this dive sequence (*e.g.,* causing beaked whales to spend more time at surface without the bounce dives that are necessary for recovery) could produce excessive levels of nitrogen supersaturation in their tissues, leading to gas bubble and emboli formation that produces pathologies similar to decompression sickness.

Recently, Zimmer and Tyack (2007) modeled nitrogen tension and bubble growth in several tissue compartments for several hypothetical dive profiles and concluded that repetitive shallow dives (defined as a dive where depth does not exceed the depth of alveolar collapse, approximately 72 m for *Ziphius*), perhaps as a consequence of an extended avoidance reaction to active sonar sound, could pose a risk for decompression sickness and that this risk should increase with the duration of the response. Their models also suggested that unrealistically rapid rates of ascent from normal dive behaviors are unlikely to result in supersaturation to the extent that bubble formation would be expected. Tyack *et al.* (2006) suggested that emboli observed in animals exposed to MFAS (Jepson *et al.,* 2003; Fernandez *et al.,* 2005) could stem from a behavioral response that involves repeated dives shallower than the depth

of lung collapse. Given that nitrogen gas accumulation is a passive process (*i.e.,* nitrogen is metabolically inert), a bottlenose dolphin was trained to repetitively dive a profile predicted to elevate nitrogen saturation to the point that nitrogen bubble formation was predicted to occur. However, inspection of the vascular system of the dolphin via ultrasound did not demonstrate the formation of asymptomatic nitrogen gas bubbles (Houser *et al.,* 2007). Baird *et al.* (2008), in a beaked whale tagging study off Hawaii, showed that deep dives are equally common during day or night, but "bounce dives" are typically a daytime behavior, possibly associated with visual predator avoidance (Baird *et al.,* 2008). This may indicate that "bounce dives" are associated with something other than behavioral regulation of dissolved nitrogen levels, which would be necessary day and night.

Despite the many theories involving bubble formation (both as a direct cause of injury (see Acoustically Mediated Bubble Growth Section) and an indirect cause of stranding (see Behaviorally Mediated Bubble Growth Section), Southall *et al.* (2007) summarizes that there is either scientific disagreement or a lack of information regarding each of the following important points: (1) Received acoustical exposure conditions for animals involved in stranding events; (2) pathological interpretation of observed lesions in stranded marine mammals; (3) acoustic exposure conditions required to induce such physical trauma directly; (4) whether noise exposure may cause behavioral reactions (such as atypical diving behavior) that secondarily cause bubble formation and tissue damage; and (5) the extent the post mortem artifacts introduced by decomposition before sampling, handling, freezing, or necropsy procedures affect interpretation of observed lesions.

Although not all of the five environmental factors believed to have contributed to the Bahamas stranding (at least three surface vessel MFAS sources operating simultaneously or in conjunction with one another, beaked whale presence, surface ducts, steep bathymetry, and constricted channels with limited egress) will be present during exercises in the GoA TMAA, NMFS recommends caution when either steep bathymetry, surface ducting conditions, or a constricted channel is present when mid-frequency active sonar is employed by multiple surface vessels simultaneously and cetaceans (especially beaked whales) are present.

Exposure to Underwater Detonation of Explosives

Some of the Navy's training exercises include the underwater detonation of explosives. For many of the exercises discussed, inert ordnance is used for a subset of the exercises. For exercises that involve "shooting" at a target that is above the surface of the water, underwater explosions only occur when the target is missed, which is the minority of the time (the Navy has historical hit/miss ratios and uses them in their exposure estimates). The underwater explosion from a weapon would send a shock wave and blast noise through the water, release gaseous by-products, create an oscillating bubble, and cause a plume of water to shoot up from the water surface. The effects of an underwater explosion on a marine mammal depend on many factors, including the size, type, and depth of both the animal and the explosive charge; the depth of the water column; and the standoff distance between the charge and the animals, as well as the sound propagation properties of the environment. Potential impacts can range from brief effects (such as behavioral disturbance), tactile perception, physical discomfort, and slight injury of the internal organs and the auditory system, to death of the animal (Yelverton *et al.,* 1973; O'Keeffe and Young, 1984; DoN, 2001). Non-lethal injury includes slight injury to internal organs and the auditory system; however, delayed lethality can be a result of individual or cumulative sublethal injuries (DoN, 2001). Immediate lethal injury would be a result of massive combined trauma to internal organs as a direct result of proximity to the point of detonation (DoN, 2001). Generally, exposures to higher levels of impulse and pressure levels would result in worse impacts to an individual animal.

Injuries resulting from a shock wave take place at boundaries between tissues of different densities. Different velocities are imparted to tissues of different densities, and this can lead to their physical disruption. Blast effects are greatest at the gas-liquid interface (Landsberg, 2000). Gas-containing organs, particularly the lungs and gastrointestinal tract, are especially susceptible (Goertner, 1982; Hill, 1978; Yelverton *et al.,* 1973). In addition, gas-containing organs including the nasal sacs, larynx, pharynx, trachea, and lungs may be damaged by compression/expansion caused by the oscillations of the blast gas bubble (Reidenberg and Laitman, 2003). Intestinal walls can bruise or rupture, with subsequent hemorrhage and escape of gut contents into the body cavity. Less severe gastrointestinal tract injuries include contusions, petechiae (small red or purple spots caused by bleeding in the skin), and slight hemorrhaging (Yelverton *et al.,* 1973).

Because the ears are the most sensitive to pressure, they are the organs most sensitive to injury (Ketten, 2000). Sound-related trauma associated with blast noise can be theoretically distinct from injury from the shock wave, particularly farther from the explosion. If an animal is able to hear a noise, at some level it can fatigue or damage its hearing by causing decreased sensitivity (see Noise-induced Threshold Shift Section above; Ketten, 1995). Sound-related trauma can be lethal or sublethal. Lethal impacts are those that result in immediate death or serious debilitation in or near an intense source and are not, technically, pure acoustic trauma (Ketten, 1995). Sublethal impacts include hearing loss, which is caused by exposures to perceptible sounds. Severe damage (from the shock wave) to the ears includes tympanic membrane rupture, fracture of the ossicles, damage to the cochlea, hemorrhage, and cerebrospinal fluid leakage into the middle ear. Moderate injury implies partial hearing loss due to tympanic membrane rupture and blood in the middle ear. Permanent hearing loss also can occur when the hair cells are damaged by one very loud event, as well as by prolonged exposure to a loud noise or chronic exposure to noise. The level of impact from blasts depends on both an animal's location and, at outer zones, on its sensitivity to the residual noise (Ketten, 1995).

There have been fewer studies addressing the behavioral effects of explosives on marine mammals than MFAS/HFAS. However, though the nature of the sound waves emitted from an explosion is different (in shape and rise time) from MFAS/HFAS, we still anticipate the same sorts of behavioral responses (see Exposure to MFAS/HFAS: Behavioral Disturbance Section) to result from repeated explosive detonations (a smaller range of likely less severe responses would be expected to occur as a result of exposure to a single explosive detonation).

Potential Effects of Vessel Movement and Collisions

Vessel movement in the vicinity of marine mammals has the potential to result in either a behavioral response or a direct physical interaction. Both scenarios are discussed below.

Vessel Movement

There are limited data concerning marine mammal behavioral responses to vessel traffic and vessel noise, and a lack of consensus among scientists with respect to what these responses mean or whether they result in short-term or long-term adverse effects. In those cases where there is a busy shipping lane or where there is a large amount of vessel traffic, marine mammals may experience acoustic masking (Hildebrand, 2005) if they are present in the area (*e.g.,* killer whales in Puget Sound; Foote *et al.,* 2004; Holt *et al.,* 2008). In cases where vessels actively approach marine mammals (*e.g.,* whale watching or dolphin watching boats), scientists have documented that animals exhibit altered behavior such as increased swimming speed, erratic movement, and active avoidance behavior (Bursk, 1983; Acevedo, 1991; Baker and MacGibbon, 1991; Trites and Bain, 2000; Williams *et al.,* 2002; Constantine *et al.,* 2003), reduced blow interval (Ritcher *et al.,* 2003), disruption of normal social behaviors (Lusseau, 2003; 2006), and the shift of behavioral activities which may increase energetic costs (Constantine *et al.,* 2003; 2004)). A detailed review of marine mammal reactions to ships and boats is available in Richardson *et al.* (1995). For each of the marine mammal taxonomy groups, Richardson *et al.* (1995) provides the following assessment regarding cetacean reactions to vessel traffic:

Toothed whales: "In summary, toothed whales sometimes show no avoidance reaction to vessels, or even approach them. However, avoidance can occur, especially in response to vessels of types used to chase or hunt the animals. This may cause temporary displacement, but we know of no clear evidence that toothed whales have abandoned significant parts of their range because of vessel traffic."

Baleen whales: "When baleen whales receive low-level sounds from distant or stationary vessels, the sounds often seem to be ignored. Some whales approach the sources of these sounds. When vessels approach whales slowly and non-aggressively, whales often exhibit slow and inconspicuous avoidance maneuvers. In response to strong or rapidly changing vessel noise, baleen whales often interrupt their normal behavior and swim rapidly away. Avoidance is especially strong when a boat heads directly toward the whale."

It is important to recognize that behavioral responses to stimuli are complex and influenced to varying degrees by a number of factors, such as species, behavioral contexts, geographical regions, source characteristics (moving or stationary, speed, direction, etc.), prior experience of the animal, and physical status of the animal. For example, studies have shown that beluga whales reacted differently when exposed to vessel noise and traffic. In some cases, naïve beluga whales exhibited rapid swimming from ice-breaking vessels up to 80 km away, and showed changes in surfacing, breathing, diving, and group composition in the Canadian high Arctic where vessel traffic is rare (Finley *et al.,* 1990). In other cases, beluga whales were more tolerant of vessels, but responded differentially to certain vessels and operating characteristics by reducing their calling rates (especially older animals) in the St. Lawrence River where vessel traffic is common (Blane and Jaakson, 1994). In Bristol Bay, Alaska, beluga whales continued to feed when surrounded by fishing vessels and resisted dispersal even when purposefully harassed (Fish and Vania, 1971).

In reviewing more than 25 years of whale observation data, Watkins (1986) concluded that whale reactions to vessel traffic were "modified by their previous experience and current activity: Habituation often occurred rapidly, attention to other stimuli or preoccupation with other activities sometimes overcame their interest or wariness of stimuli." Watkins noticed that over the years of exposure to ships in the Cape Cod area, minke whales (*Balaenoptera acutorostrata*) changed from frequent positive interest (*e.g.,* approaching vessels) to generally uninterested reactions; finback whales (*B. physalus*) changed from mostly negative (*e.g.,* avoidance) to uninterested reactions; right whales (*Eubalaena glacialis*) apparently continued the same variety of responses (negative, uninterested, and positive responses) with little change; and humpbacks (*Megaptera novaeangliae*) dramatically changed from mixed responses that were often negative to reactions that were often strongly positive. Watkins (1986) summarized that "whales near shore, even in regions with low vessel traffic, generally have become less wary of boats and their noises, and they have appeared to be less easily disturbed than previously. In particular locations with intense shipping and repeated approaches by boats (such as the whale-watching areas of Stellwagen Bank), more and more whales had P [positive] reactions to familiar vessels, and they also occasionally approached other boats and yachts in the same ways."

Although the radiated sound from Navy vessels will be audible to marine mammals over a large distance, it is unlikely that animals will respond behaviorally (in a manner that NMFS would consider MMPA harassment) to low-level distant shipping noise as the animals in the area are likely to be habituated to such noises (Nowacek *et al.,* 2004). In light of these facts, NMFS does not expect the Navy's vessel movements to result in Level B harassment.

Vessel Strike

Commercial and Navy ship strikes of cetaceans can cause major wounds, which may lead to the death of the animal. An animal at the surface could be struck directly by a vessel, a surfacing animal could hit the bottom of a vessel, or an animal just below the surface could be cut by a vessel's propeller. The severity of injuries typically depends on the size and speed of the vessel (Knowlton and Kraus, 2001; Laist *et al.,* 2001; Vanderlaan and Taggart, 2007).

The most vulnerable marine mammals are those that spend extended periods of time at the surface in order to restore oxygen levels within their tissues after deep dives (*e.g.,* the sperm whale). In addition, some baleen whales, such as the North Atlantic right whale, seem generally unresponsive to vessel sound, making them more susceptible to vessel collisions (Nowacek *et al.,* 2004). These species are primarily large, slow moving whales. Smaller marine mammals (*e.g.,* bottlenose dolphin) move quickly through the water column and are often seen riding the bow wave of large ships. Marine mammal responses to vessels may include avoidance and changes in dive pattern (NRC, 2003).

An examination of all known ship strikes from all shipping sources (civilian and military) indicates vessel speed is a principal factor in whether a vessel strike results in death (Knowlton and Kraus, 2001; Laist *et al.,* 2001; Jensen and Silber, 2003; Vanderlaan and Taggart, 2007). In assessing records in which vessel speed was known, Laist *et al.* (2001) found a direct relationship between the occurrence of a whale strike and the speed of the vessel involved in the collision. The authors concluded that most deaths occurred when a vessel was traveling in excess of 13 knots.

Jensen and Silber (2003) detailed 292 records of known or probable ship strikes of all large whale species from 1975 to 2002. Of these, vessel speed at the time of collision was reported for 58

cases. Of these cases, 39 (or 67 percent) resulted in serious injury or death (19 of those resulted in serious injury as determined by blood in the water, propeller gashes or severed tailstock, and fractured skull, jaw, vertebrae, hemorrhaging, massive bruising or other injuries noted during necropsy and 20 resulted in death). Operating speeds of vessels that struck various species of large whales ranged from 2 to 51 knots. The majority (79 percent) of these strikes occurred at speeds of 13 knots or greater. The average speed that resulted in serious injury or death was 18.6 knots. Pace and Silber (2005) found that the probability of death or serious injury increased rapidly with increasing vessel speed. Specifically, the predicted probability of serious injury or death increased from 45 percent to 75 percent as vessel speed increased from 10 to 14 knots, and exceeded 90 percent at 17 knots. Higher speeds during collisions result in greater force of impact, but higher speeds also appear to increase the chance of severe injuries or death by pulling whales toward the vessel. Computer simulation modeling showed that hydrodynamic forces pulling whales toward the vessel hull increase with increasing speed (Clyne, 1999; Knowlton *et al.,* 1995).

The Jensen and Silber (2003) report notes that the database represents a minimum number of collisions, because the vast majority probably goes undetected or unreported. In contrast, Navy vessels are likely to detect any strike that does occur, and they are required to report all ship strikes involving marine mammals. Overall, the percentages of Navy traffic relative to overall large shipping traffic are very small (on the order of 2 percent).

The probability of vessel and marine mammal interactions occurring in the GoA TMAA is dependent upon several factors including numbers, types, and speeds of vessels; the regularity, duration, and spatial extent of training events; the presence/absence and density of marine mammals; and mitigation measures implemented by the Navy. Currently, the number of Navy vessels that may be operating in the GoA TMAA varies based on training schedules and can typically range from zero to about ten vessels per 21-day exercise cycle. Ship sizes range from 362 ft (110 m) for a nuclear submarine (SSN) to 1,092 ft (331 m) for a nuclear aircraft carrier (CVN). Smaller boats, such as rigid-hulled inflatable boats (RHIBs), may also be utilized in the GoA TMAA. The smaller boats do not contain acoustic sound sources. Speeds are typically within 10 to 14 knots; however, slower or faster speeds are possible depending upon the specific training scenario. Training involving vessel movements occurs intermittently and is variable in duration, ranging from a few hours to three weeks. These training events are widely dispersed; consequently, the density of ships within the GoA TMAA at any given time is extremely low (*i.e.,* approximately 0.0002 ships/nm^2). Moreover, naval vessels transiting the GoA TMAA or engaging in the training exercises will not actively or intentionally approach a marine mammal. While in transit, naval vessels will be alert at all times, use extreme caution, and proceed at a "safe speed" so that the vessel can take proper and effective action to avoid a collision with any marine animal and can be stopped within a distance appropriate to the prevailing circumstances and conditions. When whales have been sighted in the area, Navy vessels will increase vigilance and take reasonable and practicable actions to avoid collisions and activities that might result in close interaction of naval assets and marine mammals. Actions may include changing speed and/or direction and would be dictated by environmental and other conditions (*e.g.,* safety, weather). For a thorough discussion of mitigation measures, please see the Mitigation section.

Additionally, the majority of ships participating in GoA TMAA training activities have a number of advantages for avoiding ship strikes as compared to most commercial merchant vessels, including the following: Navy ships have their bridges positioned forward, offering good visibility ahead of the bow; crew size is much larger than that of merchant ships allowing for more potential observers on the bridge; dedicated lookouts are posted during a training activity scanning the ocean for anything detectable in the water, anything detected is reported to the Officer of the Deck; Navy lookouts receive extensive training including Marine Species Awareness Training designed to provide marine species detection cues and information necessary to detect marine mammals; and Navy ships are generally much more maneuverable than commercial merchant vessels.

Based on the implementation of Navy mitigation measures and the low density of Navy ships in the GoA TMAA, NMFS has concluded, preliminarily, that the probability of a ship strike is very low, especially for dolphins and porpoises, killer whales, social pelagic odontocetes and pinnipeds that are highly visible, and/or comparatively small and maneuverable. Though more probable, NMFS also believes that the likelihood of a Navy vessel striking a mysticete or sperm whale is low. The Navy did not request take from a ship strike and based on our preliminary determination, NMFS is not recommending that they modify their request at this time. However, both NMFS and the Navy are currently engaged in a Section 7 consultation under the ESA, and that consultation will further inform our final decision.

Mitigation

In order to issue an incidental take authorization (ITA) under Section 101(a)(5)(A) of the MMPA, NMFS must set forth the "permissible methods of taking pursuant to such activity, and other means of effecting the least practicable adverse impact on such species or stock and its habitat, paying particular attention to rookeries, mating grounds, and areas of similar significance." The NDAA of 2004 amended the MMPA as it relates to military-readiness activities and the ITA process such that "least practicable adverse impact" shall include consideration of personnel safety, practicality of implementation, and impact on the effectiveness of the "military readiness activity." The training activities described in the GoA TMAA application are considered military readiness activities.

NMFS reviewed the proposed GoA TMAA activities and the proposed GoA TMAA mitigation measures as described in the Navy's LOA application to determine if they would result in the least practicable adverse effect on marine mammals, which includes a careful balancing of the likely benefit of any particular measure to the marine mammals with the likely effect of that measure on personnel safety, practicality of implementation, and impact on the effectiveness of the "military-readiness activity." NMFS identified the need to further flesh out the Navy's plan for how to respond in the event of a stranding in the GoA, and the Navy and NMFS subsequently coordinated and produced the draft Stranding Response Plan for the GoA, which is summarized below and available at: *http://www.nmfs.noaa.gov/pr/permits/incidental.htm#applications.* Included below are the mitigation measures the Navy initially proposed (see "Mitigation Measures Proposed in the Navy's LOA Application") and the Stranding Response Plan that NMFS and the Navy developed (see "Additional Measure Developed by NMFS and the Navy" below).

Mitigation Measures Proposed in the Navy's LOA Application

Personnel Training—Watchstanders and Lookouts

The use of shipboard lookouts is a critical component of all Navy mitigation measures. Navy shipboard lookouts (also referred to as "watchstanders") are highly qualified and experienced observers of the marine environment. Their duties require that they report all objects sighted in the water to the Officer of the Deck (OOD) (*e.g.,* trash, a periscope, marine mammals, sea turtles) and all disturbances (*e.g.,* surface disturbance, discoloration) that may be indicative of a threat to the vessel and its crew. There are personnel serving as lookouts on station at all times (day and night) when a ship or surfaced submarine is moving through the water.

All Commanding Officers (COs), Executive Officers (XOs), lookouts, OODs, Junior OODs (JOODs), maritime patrol aircraft aircrews, and Anti-submarine Warfare (ASW) helicopter crews would complete the NMFS-approved Marine Species Awareness Training (MSAT) by viewing the U.S. Navy MSAT digital versatile disk (DVD). MSAT may also be viewed on-line at *https://portal.navfac.navy.mil/go/msat.* MSAT training must be reviewed at least annually and again prior to the first use of mid-frequency active sonar (MFAS) and/or IEER during major ASW exercises. This training addresses the lookout's role in environmental protection, laws governing the protection of marine species, Navy stewardship commitments, and general observation information to aid in avoiding interactions with marine species, and must be recorded in the individual's training record.

Navy lookouts shall undertake extensive training in order to qualify as a watchstander in accordance with the Lookout Training Handbook (Naval Education and Training Command (NAVEDTRA) 12968–D).

Lookout training will include on-the-job instruction under the supervision of a qualified, experienced watchstander. Following successful completion of this supervised training period, lookouts will complete the Personal Qualification Standard Program, certifying that they have demonstrated the necessary skills (such as detection and reporting of partially submerged objects). Personnel being trained as lookouts can be counted among the number of lookouts required by a particular mitigation measure as long as supervisors monitor their progress and performance.

Lookouts shall be trained in the most effective means to ensure quick and effective communication within the command structure in order to facilitate implementation of protective measures if marine species are spotted.

Operating Procedures and Collision Avoidance (for All Training Types)

Prior to major exercises, a Letter of Instruction, Mitigation Measures Message, or Environmental Annex to the Operational Order will be issued to further disseminate the personnel training requirement and general marine species protective measures.

COs will make use of marine species detection cues and information to limit interaction with marine species to the maximum extent possible consistent with safety of the ship.

While underway, surface vessels will have at least two lookouts with binoculars; surfaced submarines would have at least one lookout with binoculars. Lookouts already posted for safety of navigation and man-overboard precautions may be used to fill this requirement. As part of their regular duties, lookouts shall watch for and report to the OOD the presence of marine mammals.

All surface ships participating in ASW training events shall have, in addition to the three personnel on watch constantly, at least two additional personnel on watch as lookouts at all times during the exercise.

Personnel on lookout and officers on watch on the bridge will have at least one set of binoculars available for each person to aid in the detection of marine mammals.

On surface vessels equipped with a multi-function active sensor, pedestal mounted "Big Eye" (20x110) binoculars will be properly installed and in good working order to assist in the detection of marine mammals in the vicinity of the vessel.

Personnel on lookout shall employ visual search procedures employing a scanning methodology in accordance with the Lookout Training Handbook (NAVEDTRA 12968–D).

After sunset and prior to sunrise, lookouts will employ Night Lookout Techniques in accordance with the Lookout Training Handbook (NAVEDTRA 12968–D).

Personnel on lookout shall be responsible for reporting all objects or anomalies sighted in the water (regardless of the distance from the vessel) to the OOD, since any object or disturbance (*e.g.,* trash, periscope, surface disturbance, discoloration) in the water may be indicative of a threat to the vessel and its crew, or indicative of a marine species that may need to be avoided as warranted. Navy environmental compliance relies heavily on the abilities of lookouts to detect and avoid protected species. Therefore, it is critical that lookouts be vigilant in their reporting.

While in transit, naval vessels shall be alert at all times, use extreme caution, and proceed at a "safe speed" so that the vessel could take proper and effective action to avoid a collision with any marine animal and could be stopped within a short distance appropriate to the prevailing circumstances and conditions.

When marine mammals have been sighted in the area, Navy vessels will increase vigilance and take reasonable and practicable actions to avoid collisions and activities that might result in close interaction of naval assets and marine mammals. Actions may include changing speed and/or direction and would be dictated by environmental and other conditions (*e.g.,* safety, weather).

Navy vessels will maneuver to keep at least 1,500 ft (500 yd or 457 m) away from any observed whale in the vessel's path and avoid approaching whales head-on. These requirements do not apply if a vessel's safety is threatened, such as when change of course would create an imminent and serious threat to a person, vessel, or aircraft, and to the extent vessels are restricted in their ability to maneuver. Restricted maneuverability includes, but is not limited to, situations when vessels are engaged in dredging, submerged activities, launching and recovering aircraft or landing craft, minesweeping activities, replenishment while underway, and towing activities that severely restrict a vessel's ability to deviate course. Vessels will take reasonable steps to alert other vessels in the vicinity of the whale. Given rapid swimming speeds and maneuverability of many dolphin species, naval vessels shall maintain normal course and speed on sighting dolphins unless some condition indicated a need for the vessel to maneuver.

Navy aircraft participating in exercises at sea will conduct and maintain, when operationally feasible and safe, surveillance for marine mammals as long as it does not violate safety constraints or interfere with the accomplishment of primary operational duties. Marine mammal detections would be immediately reported to the assigned Aircraft Control Unit for further dissemination to ships in the vicinity of the marine species as appropriate when it is reasonable to conclude that the course of the ship

would likely result in a closing of the distance to the detected marine mammal.

Floating weeds and kelp, algal mats, clusters of seabirds, and jellyfish are good indicators of marine mammals. Therefore, where these circumstances are present, the Navy will exercise increased vigilance in watching for marine mammals.

All vessels will maintain logs and records documenting training operations should they be required for event reconstruction purposes. Logs and records are kept and archived following completion of a major training exercise.

Operating Procedures (for Mid-Frequency Active Sonar Activities)

All personnel engaged in passive acoustic sonar operation (including aircraft, surface ships, or submarines) will monitor for marine mammal vocalizations and report the detection of any marine mammal to the appropriate watch station for dissemination and appropriate action.

During MFAS operations, personnel will utilize all available sensor and optical systems (such as night vision goggles) to aid in the detection of marine mammals.

Aircraft with deployed sonobuoys will use only the passive capability of sonobuoys when marine mammals are detected within 200 yd (183 m) of the sonobuoy.

Helicopters shall observe/survey the vicinity of an ASW exercise for 10 minutes before the first deployment of active (dipping) sonar in the water.

Helicopters shall not dip their sonar within 200 yd (183 m) of a marine mammal and shall cease pinging if a marine mammal closes within 200 yd (183 m) after pinging has begun.

Safety Zones—When marine mammals are detected by any means (aircraft, shipboard lookout, or acoustically) the Navy shall ensure that sonar transmission levels are limited to at least 6 dB below normal operating levels if any detected marine mammals are within 1,000 yd (914 m) of the sonar dome (the bow) (*i.e.,* limit to at most 229 dB for AN/SQS–53 and 219 dB for AN/SQS–56, etc.). Ships and submarines shall continue to limit maximum transmission levels by this 6-dB factor until the animal has been seen to leave the 1,000-yd safety zone, has not been detected for 30 minutes, or the vessel has transited more than 2,000 yd (1829 m) beyond the location of the last detection.

When marine mammals are detected by any means (aircraft, shipboard lookout, or acoustically) the Navy shall ensure that sonar transmission levels are limited to at least 10 dB below normal operating levels if any detected marine mammals are within 500 yd (457 m) of the sonar dome (the bow). Ships and submarines shall continue to limit maximum ping levels by this 10-dB factor until the animal has been seen to leave the 500-yd safety zone, has not been detected for 30 minutes, or the vessel has transited more than 2,000 yd (1,829 m) beyond the location of the last detection.

When marine mammals are detected by any means (aircraft, shipboard lookout, or acoustically) the Navy shall ensure that sonar transmission ceases if any detected marine mammals are within 200 yd (183 m) of the sonar dome (the bow). Sonar shall not resume until the animal has been seen to leave the 200-yd safety zone, has not been detected for 30 minutes, or the vessel has transited more than 2,000 yd (457 m) beyond the location of the last detection.

Special conditions applicable for dolphins and porpoises only: If, after conducting an initial maneuver to avoid close quarters with dolphins or porpoises, the OOD concludes that dolphins or porpoises are deliberately closing to ride the vessel's bow wave, no further mitigation actions are necessary while the dolphins or porpoises continue to exhibit bow wave riding behavior.

Prior to start up or restart of active sonar, operators will check that the 1,000-m safety zone radius around the sound source is clear of marine mammals.

Active sonar levels (generally)—Navy shall operate active sonar at the lowest practicable level, not to exceed 235 dB, except as required to meet tactical training objectives.

Submarine sonar operators will review detection indicators of close-aboard marine mammals prior to the commencement of ASW training events involving MFAS.

If the need for power-down should arise when the Navy is operating a hull-mounted or sub-mounted source above 235 dB (infrequent), the Navy shall follow the requirements as though they were operating at 235 dB—the normal operating level (*i.e.,* the first power-down will be to 229 dB, regardless of at what level above 235 dB active sonar was being operated).

Surface-to-Surface Gunnery (Up to 5-Inch Explosive Rounds)

For exercises using targets towed by a vessel, target-towing vessels shall maintain a trained lookout for marine mammals when feasible. If a marine mammal is sighted in the vicinity, the tow vessel will immediately notify the firing vessel, which will suspend the exercise until the area is clear.

A 600 yd (585 m) radius buffer zone will be established around the intended target.

From the intended firing position, trained lookouts will survey the buffer zone for marine mammals prior to commencement and during the exercise as long as practicable. Due to the distance between the firing position and the buffer zone, lookouts are only expected to visually detect breaching whales, whale blows, and large pods of dolphins and porpoises.

The exercise will be conducted only when the buffer zone is visible and marine mammals are not detected within it.

Surface-to-Surface Gunnery (Non-Explosive Rounds)

A 200-yd (183 m) radius buffer zone shall be established around the intended target.

From the intended firing position, trained lookouts shall survey the buffer zone for marine mammals prior to commencement and during the exercise as long as practicable.

If available, target towing vessels shall maintain a lookout (unmanned towing vessels will not have a lookout available). If a marine mammal is sighted in the vicinity of the exercise, the tow vessel shall immediately notify the firing vessel in order to secure gunnery firing until the area is clear.

The exercise shall be conducted only when the buffer zone is visible and marine mammals are not detected within the target area and the buffer zone.

Surface-to-Air Gunnery (Explosive and Non-Explosive Rounds)

Vessels will orient the geometry of gunnery exercises in order to prevent debris from falling in the area of sighted marine mammals.

Vessels will attempt to recover any parachute deploying aerial targets to the extent practicable (and their parachutes if feasible) to reduce the potential for entanglement of marine mammals.

Target towing aircraft shall maintain a lookout if feasible. If a marine mammal is sighted in the vicinity of the exercise, the tow aircraft will immediately notify the firing vessel in order to secure gunnery firing until the area is clear.

Air-to-Surface Gunnery (Explosive and Non-Explosive Rounds)

A 200-yd (183 m) radius buffer zone will be established around the intended target.

If surface vessels are involved, the lookouts would visually survey the

buffer zone for marine mammals prior to and during the exercise.

Aerial surveillance of the buffer zone for marine mammals will be conducted prior to commencement of the exercise. Aerial surveillance altitude of 500 feet to 1,500 feet (152–456 m) is optimum. Aircraft crew/pilot will maintain visual watch during exercises. Release of ordnance through cloud cover is prohibited; aircraft must be able to actually see ordnance impact areas.

The exercise will be conducted only if marine mammals are not visible within the buffer zone.

Air-to-Surface At-Sea Bombing Exercises (Explosive and Non-Explosive Bombs)

If surface vessels are involved, trained lookouts shall survey for marine mammals. Ordnance shall not be targeted to impact within 1,000 yds (914 m) of known or observed marine mammals.

A 1,000 yd (914 m) radius buffer zone shall be established around the intended target.

Aircraft shall visually survey the target and buffer zone for marine mammals prior to and during the exercise. The survey of the impact area shall be made by flying at 1,500 ft (152 m) or lower, if safe to do so, and at the slowest safe speed. When safety or other considerations require the release of weapons without the releasing pilot having visual sight of the target area, a second aircraft, the "wingman," will clear the target area and perform the clearance and observation functions required before the dropping plane may release its weapons. Both planes must have direct communication to assure immediate notification to the dropping plane that the target area may have been fouled by encroaching animals or people. The clearing aircraft will assure it has visual site of the target area at a maximum height of 1,500 ft (457 m). The clearing plane will remain within visual sight of the target until required to clear the area for safety reasons. Survey aircraft shall employ most effective search tactics and capabilities.

The exercises will be conducted only if marine mammals are not visible within the buffer zone.

Air-to-Surface Missile Exercises (Explosive and Non-Explosive)

Aircraft will visually survey the target area for marine mammals. Visual inspection of the target area will be made by flying at 1,500 ft (457 m) feet or lower, if safe to do so, and at slowest safe speed. Firing or range clearance aircraft must be able to actually see ordnance impact areas.

Explosive ordnance shall not be targeted to impact within 1,800 yds (1646 m) of sighted marine mammals.

Sinking Exercises (SINKEX)

The selection of sites suitable for SINKEX involves a balance of operational suitability and requirements established under the Marine Protection, Research, and Sanctuaries Act (MPRSA) permit granted to the Navy (40 CFR § 229.2). To meet operational suitability criteria, SINKEX locations must be within a reasonable distance of the target vessels' originating location. The locations should also be close to active military bases to allow participating assets access to shore facilities. For safety purposes, these locations should also be in areas that are not generally used by non-military air or watercraft. The MPRSA permit requires vessels to be sunk in waters which are at least 1,000 fathoms (6,000 ft (1828 m)) deep and at least 50 nm (92.6 km) from land, which may incidentally avoid adverse impacts to marine mammals. In general, most marine mammals prefer areas with strong bathymetric gradients and oceanographic fronts for significant biological activity such as feeding and reproduction. Typical locations include the continental shelf and shelf-edge.

In addition, the Magnuson-Stevens Fisheries Conservation and Management Act (16 U.S.C. 1801 *et seq.*), as amended by the Sustainable Fisheries Act (SFA), mandated identification and conservation of Essential Fish Habitat (EFH) as well as subset of EFH known as Habitat Areas of Particular Concern (HAPC). The guidelines for designating EFH identify HAPCs as types or areas of habitat within EFH that are defined based on one or more of the following considerations: The importance of the ecological function provided by the habitat; the extent to which the habitat is sensitive to human-induced environmental degradation; whether, and to what extent, development activities are or will be stressing the habitat type; and the rarity of the habitat type (50 CFR 600.815(a)(8)). The following HAPCs have been established in the GoA: 10 Gulf of Alaska Slope Habitat Conservation Areas (GOASHCAs), 15 Alaska Seamount Habitat Protection Areas (ASHPAs); and 5 Gulf of Alaska Coral Habitat Protection Areas (NMFS 2006). Within the TMAA, one GOASHCA (Cable) and three ASHPAs (Dall, Giacomini, and Quinn Seamounts) occur almost entirely within the TMAA. Other areas, such as the Kodiak Seamount and Middleton West GOASHCA are partially located in the TMAA. The Navy has agreed not to conduct SINKEXs—the activity with the greatest potential to impact HAPCs—within these areas.

The following mitigation measures shall be applied when conducting a SINKEX in the GoA TMAA:

All weapons firing shall be conducted during the period 1 hour after official sunrise to 30 minutes before official sunset.

An exclusion zone with a radius of 1.0 nm (1.9 km) will be established around each target. An additional buffer of 0.5 nm (0.9 km) will be added to account for errors, target drift, and animal movements. Additionally, a safety zone, which will extend beyond the buffer zone by an additional 0.5 nm (0.9 km), shall be surveyed. Together, the zone extends out 2 nm (3.7 km) from the target.

A series of surveillance over-flights shall be conducted within the 2 nm (3.7 km) zone around the target, prior to and during the exercise, when feasible. Survey protocol shall be as follows:

Overflights within the 2 nm (3.7 km) zone around the target shall be conducted in a manner that optimizes the surface area of the water observed. This may be accomplished through the use of the Navy's Search and Rescue Tactical Aid, which provides the best search altitude, ground speed, and track spacing for the discovery of small, possibly dark objects in the water based on the environmental conditions of the day. These environmental conditions include the angle of sun inclination, amount of daylight, cloud cover, visibility, and sea state.

All visual surveillance activities shall be conducted by Navy personnel trained in visual surveillance. At least one member of the mitigation team will have completed the Navy's marine mammal training program for lookouts.

In addition to the overflights, the 2-nm (3.7 km) zone around the target shall be monitored by passive acoustic means, when assets are available. This passive acoustic monitoring will be maintained throughout the exercise. Additionally, passive sonar onboard submarines may be utilized to detect any vocalizing marine mammals in the area. The OCE will be informed of any aural detection of marine mammals and will include this information in the determination of when it is safe to commence the exercise.

On each day of the exercise, aerial surveillance of the 2 nm (3.7 km) zone around the target shall commence 2 hours prior to the first firing.

The results of all visual, aerial, and acoustic searches shall be reported immediately to the OCE. No weapons launches or firing may commence until the OCE declares this 2 nm (3.7 km)

zone around the target is free of marine mammals.

If a marine mammal is observed within the 2 nm (3.7 km) zone around the target, firing will be delayed until the animal is re-sighted outside the 2 nm (3.7 km) zone around the target, or 30 minutes have elapsed. After 30 minutes, if the animal has not been re-sighted it can be assumed to have left the 2 nm (3.7 km) zone around the target. The OCE will determine if the marine mammal is in danger of being adversely affected by commencement of the exercise.

During breaks in the exercise of 30 minutes or more, the 2 nm (3.7 km) zone around the target shall again be surveyed for any marine mammal. If marine mammals are sighted within the 2 nm (3.7 km) zone around the target, the OCE shall be notified, and the procedure described above shall be followed.

Upon sinking of the vessel, a final surveillance of the 2 nm (3.7 km) zone around the target shall be monitored for 2 hours, or until sunset, to verify that no marine mammals were harmed.

Aerial surveillance shall be conducted using helicopters or other aircraft based on necessity and availability. The Navy has several types of aircraft capable of performing this task; however, not all types are available for every exercise. For each exercise, the available asset best suited for identifying objects on and near the surface of the ocean shall be used. These aircraft shall be capable of flying at the slow safe speeds necessary to enable viewing of marine vertebrates with unobstructed, or minimally obstructed, downward and outward visibility. The exclusion and safety zone surveys may be cancelled in the event that a mechanical problem, emergency search and rescue, or other similar and unexpected event preempts the use of one of the aircraft onsite for the exercise.

Every attempt shall be made to conduct the exercise in sea states that are ideal for marine mammal sighting, Beaufort Sea State 3 or less. In the event of a 4 or above, survey efforts shall be increased within the 2 nm (3.7 km) zone around the target. This shall be accomplished through the use of an additional aircraft, if available, and conducting tight search patterns.

The exercise shall not be conducted unless the 2 nm (3.7 km) zone around the target could be adequately monitored visually. Should low cloud cover or surface visibility prevent adequate visual monitoring as described previously, the exercise would be delayed until conditions improved, and all of the above monitoring criteria could be met.

In the event that any marine mammals are observed to be harmed in the area, a detailed description of the animal shall be taken, the location noted, and if possible, photos taken of the marine mammal. This information shall be provided to NMFS via the Navy's regional environmental coordinator for purposes of identification (see the Stranding Plan for detail).

An after action report detailing the exercise's time line, the time the surveys commenced and terminated, amount, and types of all ordnance expended, and the results of survey efforts for each event shall be submitted to NMFS.

Explosive Source Sonobuoys (SSQ–110A)

AN/SSQ–110A Pattern Deployment—The following mitigation measures shall be used with the employment of IEER/AEER sonobuoys:

Crews shall conduct visual reconnaissance of the drop area prior to laying their intended sonobuoy pattern. This search shall be conducted at an altitude below 500 yd (457 m) at a slow speed, if operationally feasible and weather conditions permit. In dual aircraft operations, crews are allowed to conduct coordinated area clearances.

For IEER (AN/SSQ–110A), crews shall conduct a minimum of 30 minutes of visual and aural monitoring of the search area prior to commanding the first post detonation. This 30-minute observation period may include pattern deployment time.

For any part of the intended sonobuoy pattern where a post (source/receiver sonobuoy pair) will be deployed within 1,000 yd (914 m) of observed marine mammal activity, the Navy shall deploy the receiver only (*i.e.,* not the source) and monitor while conducting a visual search. When marine mammals are no longer detected within 1,000 yd (914 m) of the intended post position, the source sonobuoy (AN/SSQ–110A/SSQ–125) will be co-located with the receiver.

When operationally feasible, Navy crews shall conduct continuous visual and aural monitoring of marine mammal activity. This shall include monitoring of own-aircraft sensors from the time of the first sensor placement until the aircraft have left the area and are out of RF range of these sensors.

AN/SSQ–110A Pattern Employment

Aural Detection—If the presence of marine mammals is detected aurally, then that shall cue the Navy aircrew to increase the diligence of their visual surveillance. Subsequently, if no marine mammals are visually detected, then the crew may continue multi-static active search.

Visual Detection—If marine mammals are visually detected within 1,000 yd (914 m) of the explosive source sonobuoy (AN/SSQ–110A/SSQ–125) intended for use, then that payload shall not be activated. Aircrews may utilize this post once the marine mammals have not been re-sighted for 30 minutes, or are observed to have moved outside the 1,000 yd (914 m) safety buffer. Aircrews may shift their multi-static active search to another post, where marine mammals are outside the 1,000 yd (914 m) safety buffer.

AN/SSQ–110A Scuttling Sonobuoys

For IEER (AN/SSQ–110A), aircrews shall make every attempt to manually detonate the unexploded charges at each post in the pattern prior to departing the operations area by using the "Payload 1 Release" command followed by the "Payload 2 Release" command. Aircrews shall refrain from using the "Scuttle" command when two payloads remain at a given post. Aircrews shall ensure that a 1,000 yd (914 m) safety buffer, visually clear of marine mammals, is maintained around each post as is done during active search operations.

Aircrews shall only leave posts with unexploded charges in the event of a sonobuoy malfunction, an aircraft system malfunction, or when an aircraft must immediately depart the area due to issues such as fuel constraints, inclement weather, and in-flight emergencies. In these cases, the sonobuoy will self-scuttle using the secondary or tertiary method.

The Navy shall ensure all payloads are accounted for. Explosive source sonobuoys (AN/SSQ–110A) that cannot be scuttled shall be reported as unexploded ordnance via voice communications while airborne, then upon landing via naval message.

Mammal monitoring shall continue until out of own-aircraft sensor range.

Mitigation Conclusions

NMFS has carefully evaluated the Navy's proposed mitigation measures and considered a broad range of other measures in the context of ensuring that NMFS prescribes the means of effecting the least practicable adverse impact on the affected marine mammal species and stocks and their habitat. Our evaluation of potential measures included consideration of the following factors in relation to one another: The manner in which, and the degree to which, the successful implementation of the measure is expected to minimize adverse impacts to marine mammals; the proven or likely efficacy of the

specific measure to minimize adverse impacts as planned; and the practicability of the measure for applicant implementation, including consideration of personnel safety, practicality of implementation, and impact on the effectiveness of the military readiness activity.

In some cases, additional mitigation measures are required beyond those that the applicant proposes. Any mitigation measure(s) prescribed by NMFS should be able to accomplish, have a reasonable likelihood of accomplishing (based on current science), or contribute to the accomplishment of one or more of the general goals listed below:

(a) Avoidance or minimization of injury or death of marine mammals wherever possible (goals b, c, and d may contribute to this goal).

(b) A reduction in the numbers of marine mammals (total number or number at biologically important time or location) exposed to received levels of MFAS/HFAS, underwater detonations, or other activities expected to result in the take of marine mammals (this goal may contribute to a, above, or to reducing harassment takes only).

(c) A reduction in the number of times (total number or number at biologically important time or location) individuals would be exposed to received levels of MFAS/HFAS, underwater detonations, or other activities expected to result in the take of marine mammals (this goal may contribute to a, above, or to reducing harassment takes only).

(d) A reduction in the intensity of exposures (either total number or number at biologically important time or location) to received levels of MFAS/HFAS, underwater detonations, or other activities expected to result in the take of marine mammals (this goal may contribute to a, above, or to reducing the severity of harassment takes only).

(e) Avoidance or minimization of adverse effects to marine mammal habitat, paying special attention to the food base, activities that block or limit passage to or from biologically important areas, permanent destruction of habitat, or temporary destruction/disturbance of habitat during a biologically important time.

(f) For monitoring directly related to mitigation—an increase in the probability of detecting marine mammals, thus allowing for more effective implementation of the mitigation (shut-down zone, etc.).

Based on our evaluation of the Navy's proposed measures, as well as other measures considered by NMFS or recommended by the public, NMFS has determined preliminarily that the Navy's proposed mitigation measures (especially when the Adaptive Management component is taken into consideration (see Adaptive Management, below)) are adequate means of effecting the least practicable adverse impacts on marine mammals species or stocks and their habitat, paying particular attention to rookeries, mating grounds, and areas of similar significance, while also considering personnel safety, practicality of implementation, and impact on the effectiveness of the military readiness activity. Further detail is included below.

The proposed rule comment period will afford the public an opportunity to submit recommendations, views, and/or concerns regarding this action and the proposed mitigation measures. While NMFS has determined preliminarily that the Navy's proposed mitigation measures would effect the least practicable adverse impact on the affected species or stocks and their habitat, NMFS will consider all public comments to help inform our final decision. Consequently, the proposed mitigation measures may be refined, modified, removed, or added to prior to the issuance of the final rule based on public comments received, and where appropriate, further analysis of any additional mitigation measures.

NMFS believes that the range clearance procedures and shutdown/safety zone/exclusion zone measures the Navy has proposed will enable the Navy to avoid injuring marine mammals and will enable them to minimize the numbers of marine mammals exposed to levels associated with TTS for the following reasons:

MFAS/HFAS

The Navy's standard protective measures indicate that they would ensure power-down of MFAS/HFAS by 6 dB when a marine mammal is detected within 1,000 yd (914 m), power-down of 4 more dB (or 10 dB total) when a marine mammal is detected within 500 yd (457 m), and would cease MFAS/HFAS transmissions when a marine mammal is detected within 200 yd (183 m).

PTS/Injury—NMFS believes that the proposed mitigation measures would allow the Navy to avoid exposing marine mammals to received levels of MFAS/HFAS sound that would result in injury for the following reasons: The estimated distance from the most powerful source at which cetaceans would receive levels at or above the threshold for PTS/injury/Level A Harassment is approximately 33 ft (10 m); and NMFS believes that the probability that a marine mammal would approach within the above distances of the sonar dome (to the sides or below) without being seen by the watchstanders (who would then activate a shutdown if the animal was within 200 yd (183 m)) is very low, especially considering that animals would likely avoid approaching a source transmitting at that level at that distance.

TTS—NMFS believes that the proposed mitigation measures would allow the Navy to minimize exposure of marine mammals to received levels of MFAS/HFAS sound associated with TTS for the following reasons: The estimated maximum distance from the most powerful source at which cetaceans would receive levels at or above the threshold for TTS is approximately 584 ft (178 m) from the source in most operating environments; based on the size of the animals, average group size, behavior, and average dive time, NMFS believes that the probability that Navy watchstanders would visually detect marine mammals at some point within the 1,000 yd (914 km) safety zone before they are exposed to the TTS threshold levels is high, which means that the Navy would often be able to shut down or power-down to avoid exposing these species to sound levels associated with TTS; more cryptic animals that are difficult to detect and observe, such as deep-diving cetaceans (*i.e.,* beaked whales), are less likely to be visually detected and could potentially be exposed to levels of MFAS/HFAS expected to cause TTS. However, animals at depth in one location would not be expected to be continuously exposed to repeated sonar signals given the typical 10–14 knot speed of Navy surface ships during ASW events. During a typical 1-hr subsurface dive by a beaked whale, the ship would have moved over 5 to 10 nm from the original location; and, the Navy's bow riding mitigation exception for dolphins may sometimes result in dolphins being exposed to levels of MFAS/HFAS likely to result in TTS. However, there are combinations of factors that reduce the acoustic energy received by dolphins approaching ships to ride in bow waves. Dolphins riding a ship's bow wave are outside of the main beam of the MFAS vertical beam pattern. Source levels drop quickly outside of the main beam. Sidelobes of the radiate beam pattern that point to the surface are significantly lower in power. Together with spherical spreading losses, received levels in the ship's bow wave can be more than 42 dB less than typical source level (*i.e.,* 235 dB − 42 dB = 193 dB SPL). Finally, bow wave riding dolphins are frequently in and out of a bubble layer

generated by the breaking bow waves. This bubble layer is an excellent scatterer of acoustic energy and can further reduce received energy.

The Stranding Response Plan will minimize the probability of distressed live-stranded animals responding to the proximity of sonar in a manner that further stresses them or increases the potential likelihood of mortality.

Underwater Explosives

The Navy utilizes exclusion zones (wherein explosive detonation will not begin/continue if animals are within the zone) for explosive exercises. Table 3 identifies the various explosives, the estimated distance at which animals will receive levels associated with take (see Acoustic Take Criteria Section), and the exclusion zone associated with the explosive types.

Mortality and Injury—NMFS believes that the mitigation measures will allow the Navy to avoid exposing marine mammals to underwater detonations that would result in injury or mortality for the following reasons: Surveillance for large charges (which includes aerial and passive acoustic detection methods, when available, to ensure clearance) begins two hours before the exercise and extends to 2 nm (3704 m) from the source. Surveillance for all charges extends out 3–50 times the farthest distance from the source at which injury would be anticipated to occur (see Table 3). Animals would need to be less than 611 m (688 yd) (large explosives) or 19 m (20.7 yd) (smaller charges) from the source to be injured. Unlike for active sonar, an animal would need to be present at the exact moment of the explosion(s) (except for the short series of gunfire example in GUNEX) to be taken. The model predicted that four animals (three Dall's porpoises and one Northern fur seal) would be exposed to explosive levels associated with injury or death. When the implementation of the exclusion zones (*i.e.,* the fact that the Navy will not start a detonation or will not continue to detonate explosives if an animal is detected within the exclusion zone) is considered in combination with the factors described in the above bullets, NMFS believes that the Navy's mitigation will prevent injury and mortality to marine mammals from explosives.

TTS—NMFS believes that the proposed mitigation measures will allow the Navy to minimize the exposure of marine mammals to underwater detonations that would result in TTS for the following reasons: Seventy animals annually were predicted to be exposed to explosive levels that would result in TTS. For the reasons explained above, NMFS believes that most modeled TTS takes can be avoided, especially dolphins, mysticetes and sperm whales, and social pelagic species. However, more cryptic, deep-diving species (*e.g.,* beaked whales) are less likely to be visually detected and could potentially be exposed to explosive levels expected to cause TTS. The model estimated that two beaked whales would be exposed to TTS levels. Additionally, for SINKEXs, the distance at which an animal would be expected to receive sound or pressure levels associated with TTS (182 dB SEL or 23 psi) is sometimes (when the largest explosive type, the MK–84, is used) larger than the exclusion zone, which means that for those two exercise types, some individuals will likely be exposed to levels associated with TTS outside of the exclusion zone.

Research

The Navy provides a significant amount of funding and support to marine research. In the past five years the agency funded over $100 million ($26 million in Fiscal Year 08 alone) to universities, research institutions, federal laboratories, private companies, and independent researchers around the world to study marine mammals. The U.S. Navy sponsors 70 percent of all U.S. research concerning the effects of human-generated sound on marine mammals and 50 percent of such research conducted worldwide. Major topics of Navy-supported research include the following:

- Better understanding of marine species distribution and important habitat areas;
- Developing methods to detect and monitor marine species before and during training;
- Understanding the effects of sound on marine mammals, sea turtles, fish, and birds; and
- Developing tools to model and estimate potential effects of sound.

This research is directly applicable to fleet training activities, particularly with respect to the investigations of the potential effects of underwater noise sources on marine mammals and other protected species. Proposed training activities employ active sonar and underwater explosives, which introduce sound into the marine environment.

The Marine Life Sciences Division of the Office of Naval Research currently coordinates six programs that examine the marine environment and are devoted solely to studying the effects of noise and/or the implementation of technology tools that will assist the Navy in studying and tracking marine mammals. The six programs are as follows:

- Environmental Consequences of Underwater Sound
- Non-Auditory Biological Effects of Sound on Marine Mammals
- Effects of Sound on the Marine Environment
- Sensors and Models for Marine Environmental Monitoring
- Effects of Sound on Hearing of Marine Animals
- Passive Acoustic Detection, Classification, and Tracking of Marine Mammals

The Navy has also developed the technical reports referenced within this document, which include the Marine Resource Assessment. Furthermore, research cruises by NMFS and by academic institutions have received funding from the U.S. Navy. For example, in April 2009, the U.S. Pacific Fleet contributed approximately $250,000 to support a NMFS marine mammal density survey of the GoA's offshore waters. The goal of this validation monitoring was to increase the state of awareness on marine mammal occurrence, density, and distribution within the GoA. The Navy funded vessel-based line-transect survey conducted from onboard the NOAA ship *Oscar Dyson* determined marine mammal species distribution and abundance in the GoA TMAA. The survey cruise employed multiple observation techniques, including visual and passive acoustic observations, as well as photographic identifications (Rone *et al.,* 2009). In addition to the U.S. Pacific Fleet-funded monitoring initiative, the Chief of Naval Operations Environmental Readiness Division and the Office of Naval Research have developed a coordinated Science & Technology and Research & Development program focused on marine mammals and sound. Total Investment in this program between 2004 and 2008 was $100 million. Fiscal Year 09 funding was $22 million and continued funding at levels greater than $14 million is foreseen in subsequent years (beyond 2010).

The Navy has sponsored several workshops to evaluate the current state of knowledge and potential for future acoustic monitoring of marine mammals. The workshops brought together acoustic experts and marine biologists from the Navy and other research organizations to present data and information on current acoustic monitoring research efforts and to evaluate the potential for incorporating similar technology and methods on instrumented ranges. However, acoustic detection, identification, localization,

and tracking of individual animals still requires a significant amount of research effort to be considered a reliable method for marine mammal monitoring. The Navy supports research efforts on acoustic monitoring and will continue to investigate the feasibility of passive acoustics as a potential mitigation and monitoring tool.

Overall, the Navy will continue to fund ongoing marine mammal research, and is planning to coordinate long-term monitoring/studies of marine mammals on various established ranges and operating areas. The Navy will continue to research and contribute to university/external research to improve the state of the science regarding marine species biology and acoustic effects. These efforts include mitigation and monitoring programs; data sharing with NMFS and via the literature for research and development efforts; and future research as described previously.

Monitoring

Section 101(a)(5)(A) of the MMPA states that in order to issue an ITA for an activity, NMFS must set forth "requirements pertaining to the monitoring and reporting of such taking". The MMPA implementing regulations at 50 CFR 216.104(a)(13) indicate that requests for LOAs must include the suggested means of accomplishing the necessary monitoring and reporting that will result in increased knowledge of the species and of the level of taking or impacts on populations of marine mammals that are expected to be present.

Monitoring measures prescribed by NMFS should accomplish one or more of the following general goals:

(a) An increase in our understanding of how many marine mammals are likely to be exposed to levels of MFAS/HFAS (or explosives or other stimuli) that we associate with specific adverse effects, such as behavioral harassment, TTS, or PTS.

(b) An increase in our understanding of how individual marine mammals respond (behaviorally or physiologically) to MFAS/HFAS (at specific received levels), explosives, or other stimuli expected to result in take.

(c) An increase in our understanding of how anticipated takes of individuals (in different ways and to varying degrees) may impact the population, species, or stock (specifically through effects on annual rates of recruitment or survival).

(d) An increase in knowledge of the affected species.

(e) An increase in our understanding of the effectiveness of certain mitigation and monitoring measures.

(f) A better understanding and record of the manner in which the authorized entity complies with the incidental take authorization.

(g) An increase in the probability of detecting marine mammals, both within the safety zone (thus allowing for more effective implementation of the mitigation) and in general to better achieve the above goals.

Proposed Monitoring Plan for the GoA TMAA

The Navy submitted a draft Monitoring Plan for the GoA TMAA which may be viewed at NMFS' Web site: *http://www.nmfs.noaa.gov/pr/permits/incidental.htm#applications*. The plan may be modified or supplemented based on comments or new information received from the public during the public comment period. A summary of the primary components of the plan follows.

Navy Monitoring Plans are typically designed as a collection of focused "studies" to gather data that will allow the Navy to address one or more of the following questions:

(a) Are marine mammals exposed to MFAS/HFAS (1–10 kHz), especially at levels associated with adverse effects (*i.e.,* based on NMFS' criteria for behavioral harassment, TTS, or PTS)? If so, at what levels are they exposed?

(b) If marine mammals are exposed to MFAS/HFAS, do they redistribute geographically as a result of continued exposure? If so, how long does the redistribution last?

(c) If marine mammals are exposed to MFAS/HFAS, what are their behavioral responses to various levels?

(d) What are the behavioral responses of marine mammals that are exposed to explosives at specific levels?

(e) Is the Navy's suite of mitigation measures for MFAS/HFAS and explosives (*e.g.,* Protective Measures Assessment Protocol, major exercise measures agreed to by the Navy through permitting) effective at avoiding TTS, injury, and mortality of marine mammals?

Given the larger scope of training events within other Navy range complexes as compared to the GoA, not all of these original five study questions would necessarily be addressed within the GoA TMAA Monitoring Plan. Rather, data collected from the GoA monitoring efforts would be used to supplement a consolidated range complex marine mammal monitoring report incorporating data from the Hawaii Range Complex, Marianas Island Range Complex, Northwest Training Range Complex, and Southern California Range Complex.

Data gathered in these studies will be collected by qualified, professional marine mammal biologists that are experts in their field.

Monitoring methods proposed for the GoA include use of passive acoustic monitoring (PAM) to primarily focus on providing additional data or study questions (b) and (c).

This monitoring plan has been designed to gather data on all species of marine mammals that are observed in the GoA TMAA study area; however, the Navy will prioritize monitoring efforts for ESA-listed species and beaked whale species. The Plan recognizes that deep-diving and cryptic species of marine mammals, such as beaked whales and sperm whales, may have low probability of visual detection (Barlow and Gisiner, 2006). Therefore, methods will be utilized to address this issue (*e.g.,* PAM).

During the comment period on the Notice of Receipt (75 FR 5575, February 3, 2010) for the GoA TMAA action, NMFS received multiple public comments suggesting that there are inadequate density, distribution, and abundance data for marine mammals in the GoA TMAA. As mentioned previously, the Navy funded a $250,000 density survey in the off-shore waters of the GoA TMAA in April, 2009. As noted above, the Navy's draft monitoring plan was developed specifically to address distribution and abundance of marine mammals, and the year-round PAM recorders may fill in some of the seasonal data-gaps. NMFS believes that we should vigorously target this baseline information need with the monitoring plan and we will continue to work with the Navy on the draft plan, and in consideration of the public comments that we receive on this proposed rule. During the public comment period, we encourage the public to recommend the most effective regionally specific methods for gathering the needed marine mammal density, distribution, and abundance information and to prioritize the specific data needs (species, time of year, etc.). This information will ensure the design of the most effective Monitoring Plan with the resources available.

In addition to the Monitoring Plan for the GoA, the Navy has established an Integrated Comprehensive Monitoring Program (ICMP). The ICMP is a Navy-wide monitoring framework that will provide an overarching structure and coordination that will, over time, compile data from all Navy range-specific monitoring plans; the GoA TMAA plan is just one component of the ICMP. The overall objective of the

ICMP is to assimilate relevant data collected across Navy range complexes in order to answer questions pertaining to the impact of MFAS and underwater explosive detonations on marine animals. Top priorities of the ICMP include: Monitor Navy training events, particularly those involving MFAS and underwater detonations; collect data to support estimating the number of individuals exposed to sound levels above current regulatory thresholds; assess the efficacy and practicability of monitoring and mitigation tools and techniques and the Navy's current mitigation methods; and add to the overall knowledge base on potential behavioral and physiological effects to marine species from MFAS and underwater detonations. More information about the ICMP may be found in the draft Monitoring Plan for the GoA.

Monitoring Workshop

The Navy, with guidance and support from NMFS, will convene a Monitoring Workshop, including marine mammal and acoustic experts as well as other interested parties, in 2011. The Monitoring Workshop participants will review the monitoring results from other Navy rules and LOAs (*e.g.,* the Southern California Range Complex (SOCAL), Hawaii Range Complex (HRC), etc.). The Monitoring Workshop participants will provide their individual recommendations to the Navy and NMFS on the monitoring plan(s) after also considering the current science (including Navy research and development) and working within the framework of available resources and feasibility of implementation. NMFS and the Navy will then analyze the input from the Monitoring Workshop participants and determine the best way forward from a national perspective. Subsequent to the Monitoring Workshop, modifications will be applied to monitoring plans as appropriate.

Adaptive Management

The final regulations governing the take of marine mammals incidental to Navy training exercises in the GoA TMAA will contain an adaptive management component. Our understanding of the effects of MFAS and explosives on marine mammals is still in its relative infancy, and yet the science in this field is evolving fairly quickly. These circumstances make the inclusion of an adaptive management component both valuable and necessary within the context of 5-year regulations for activities that have been associated with marine mammal mortality in certain circumstances and locations (though not in the Pacific Ocean). The use of adaptive management will allow NMFS to consider new information from different sources to determine (with input from the Navy regarding practicability) on an annual or biennial basis if mitigation or monitoring measures should be modified (including additions or deletions) if new data suggest that such modifications are appropriate for subsequent annual or biennial LOAs.

The following are some of the possible sources of applicable data: (1) Findings of the Workshop that the Navy will convene in 2011 to analyze monitoring results to date, review current science, and recommend modifications, as appropriate, to the monitoring protocols to increase monitoring effectiveness; (2) compiled results of Navy funded research and development (R&D) studies (presented pursuant to the ICMP, which is discussed elsewhere in this document); (3) results from specific stranding investigations (involving coincident MFAS or explosives training or not involving coincident use); (4) results from general marine mammal and sound research; and (5) any information which reveals that marine mammals may have been taken in a manner, extent or number not authorized by these regulations or subsequent Letters of Authorization.

Separately, in July 2010, NMFS and the Navy convened the "Marine Mammals and Sound" workshop, which brought together science and policy experts from the government, the academic community, and non-governmental organizations with the goals of prioritizing marine mammal research needs and opening up a broad discussion of (and potentially making recommendations regarding) some of the current management issues related to marine mammals and sound. After the information and ideas gathered during this workshop are sorted, compiled, and assessed, NMFS will use them, as appropriate, to inform our management decisions on issues such as appropriate mitigation and monitoring. In addition to considering these workshop products in the broader context of all MMPA authorizations that the Office of Protected Resources, they will also be considered as NMFS and the Navy work through the Adaptive Management process outlined for the GOA below.

Mitigation measures could be modified, added, or deleted if new information suggests that such modifications would have a reasonable likelihood of accomplishing the goals of mitigation laid out in this proposed rule and if the measures are practicable. NMFS would also coordinate with the Navy to modify, add, or delete the existing monitoring requirements if the new data suggest that the addition of (or deletion of) a particular measure would more effectively accomplish the goals of monitoring laid out in this proposed rule. The reporting requirements associated with this proposed rule are designed to provide NMFS with monitoring data from the previous year to allow NMFS to consider the data and issue LOAs. NMFS and the Navy will meet, prior to LOA issuance, to discuss the monitoring reports, Navy R&D developments, and current science and whether mitigation or monitoring modifications are appropriate.

Reporting

In order to issue an ITA for an activity, Section 101(a)(5)(A) of the MMPA states that NMFS must set forth "requirements pertaining to the monitoring and reporting of such taking". Effective reporting is critical both to compliance as well as ensuring that the most value is obtained from the required monitoring. Proposed reporting requirements may be modified, removed, or added based on information or comments received during the public comment period. Currently, there are several different reporting requirements pursuant to these proposed regulations:

General Notification of Injured or Dead Marine Mammals

Navy personnel will ensure that NMFS is notified immediately (see Communication Plan) or as soon as clearance procedures allow if an injured, stranded, or dead marine mammal is found during or shortly after, and in the vicinity of, any Navy training exercise utilizing MFAS, HFAS, or underwater explosive detonations. The Navy will provide NMFS with species or description of the animal(s), the condition of the animal(s) (including carcass condition if the animal is dead), location, time of first discovery, observed behaviors (if alive), and photo or video (if available). The GoA TMAA Stranding Response Plan contains more specific reporting requirements for specific circumstances.

In the event that an injured, stranded, or dead marine mammal is found by the Navy that is not in the vicinity of, or found during or shortly after MFAS, HFAS, or underwater explosive detonations, the Navy will report the same information as listed above as soon as operationally feasible and clearance procedures allow.

General Notification of a Ship Strike

In the event of a ship strike by any Navy vessel, at any time or place, the Navy shall do the following:

- Immediately report to NMFS the species identification (if known), location (lat/long) of the animal (or the strike if the animal has disappeared), and whether the animal is alive or dead (or unknown);
- Report to NMFS as soon as operationally feasible the size and length of the animal, an estimate of the injury status (*e.g.,* dead, injured but alive, injured and moving, unknown, etc.), vessel class/type and operational status;
- Report to NMFS the vessel length, speed, and heading as soon as feasible; and
- Provide NMFS a photo or video, if equipment is available.

Annual GoA TMAA Monitoring Plan Report

The Navy shall submit a report annually on December 15 describing the implementation and results (April through October of the same year) of the GoA TMAA Monitoring Plan, described above. Data collection methods will be standardized across range complexes to allow for comparison in different geographic locations. Although additional information will also be gathered, the marine mammal observers (MMOs) collecting marine mammal data pursuant to the GoA TMAA Monitoring Plan shall, at a minimum, provide the same marine mammal observation data required in the MFAS/HFAS major Training Exercises section of the Annual GoA TMAA Exercise Report referenced below.

The GoA TMAA Monitoring Plan Report may be provided to NMFS within a larger report that includes the required Monitoring Plan Reports from multiple Range Complexes.

Annual GoA TMAA Exercise Report

The Navy will submit an Annual GoA TMAA Report on December 15 of every year (covering data gathered from April through October). This report shall contain the subsections and information indicated below.

MFAS/HFAS Training Exercises

This section shall contain the following information for the following Coordinated and Strike Group exercises: Joint Multi-strike Group Exercises; Joint Expeditionary Exercises; and Marine Air Ground Task Force TMAA:

(a) *Exercise Information (for each exercise)*

(i) Exercise designator

(ii) Date that exercise began and ended

(iii) Location

(iv) Number and types of active sources used in the exercise

(v) Number and types of passive acoustic sources used in exercise

(vi) Number and types of vessels, aircraft, etc., participating in exercise

(vii) Total hours of observation by watchstanders

(viii) Total hours of all active sonar source operation

(ix) Total hours of each active sonar source (along with an explanation of how hours are calculated for sources typically quantified in alternate way (buoys, torpedoes, etc.)).

(x) Wave height (high, low, and average during exercise)

(b) *Individual marine mammal sighting info (for each sighting in each exercise)*

(i) Location of sighting

(ii) Species (if not possible—indication of whale/dolphin/pinniped)

(iii) Number of individuals

(iv) Calves observed (y/n)

(v) Initial Detection Sensor

(vi) Indication of specific type of platform observation made from (including, for example, what type of surface vessel, *i.e.,* FFG, DDG, or CG)

(vii) Length of time observers maintained visual contact with marine mammal(s)

(viii) Wave height (in feet)

(ix) Visibility

(x) Sonar source in use (y/n)

(xi) Indication of whether animal is <200 yd, 200–500 yd, 500–1,000 yd, 1,000–2,000 yd, or >2,000 yd from sonar source in (x) above

(xiii) Mitigation Implementation—Whether operation of sonar sensor was delayed, or sonar was powered or shut down, and how long the delay was

(xiv) If source in use (x) is hullmounted, true bearing of animal from ship, true direction of ship's travel, and estimation of animal's motion relative to ship (opening, closing, parallel)

(xv) Observed behavior—Watchstanders shall report, in plain language and without trying to categorize in any way, the observed behavior of the animals (such as animal closing to bow ride, paralleling course/speed, floating on surface and not swimming, etc.)

(c) *An evaluation (based on data gathered during all of the exercises) of the effectiveness of mitigation measures designed to avoid exposing marine mammals to MFAS, that shall identify the specific observations that support any conclusions the Navy reaches about the effectiveness of the mitigation*

ASW Summary

This section shall include the following information as summarized from non-major training exercises (unit-level exercises, such as TRACKEXs):

(a) *Total Hours*—Total annual hours of each type of sonar source (along with explanation of how hours are calculated for sources typically quantified in alternate way (buoys, torpedoes, etc.))

(b) *Cumulative Impacts*—To the extent practicable, the Navy, in coordination with NMFS, shall develop and implement a method of annually reporting non-major training (*i.e.,* ULT) utilizing hull-mounted sonar. The report shall present an annual (and seasonal, where practicable) depiction of non-major training exercises geographically across the GoA TMAA. The Navy shall include (in the GoA TMAA annual report) a brief annual progress update on the status of the development of an effective and unclassified method to report this information until an agreed-upon (with NMFS) method has been developed and implemented.

Sonar Exercise Notification

The Navy shall submit to the NMFS Office of Protected Resources (specific contact information to be provided in LOA) either an electronic (preferably) or verbal report within fifteen calendar days after the completion of any MTER indicating:

(1) Location of the exercise

(2) Beginning and end dates of the exercise

(3) Type of exercise

Improved Extended Echo-Ranging System (IEER)/Advanced Extended Echo-Ranging System (AEER) Summary

This section shall include an annual summary of the following IEER and AEER information:

(i) Total number of IEER and AEER events conducted in GoA TMAA Study Area

(ii) Total expended/detonated rounds (buoys)

(iii) Total number of self-scuttled IEER rounds

Sinking Exercises (SINKEXs)

This section shall include the following information for each SINKEX completed that year:

(a) *Exercise information:*

(i) Location

(ii) Date and time exercise began and ended

(iii) Total hours of observation by watchstanders before, during, and after exercise

(iv) Total number and types of rounds expended/explosives detonated

(v) Number and types of passive acoustic sources used in exercise

(vi) Total hours of passive acoustic search time

(vii) Number and types of vessels, aircraft, etc., participating in exercise

(viii) Wave height in feet (high, low and average during exercise)

(ix) Narrative description of sensors and platforms utilized for marine mammal detection and timeline illustrating how marine mammal detection was conducted

(b) *Individual marine mammal observation during SINKEX (by Navy lookouts) information:*

(i) Location of sighting

(ii) Species (if not possible—indication of whale/dolphin/pinniped)

(iii) Number of individuals

(iv) Calves observed (y/n)

(v) Initial detection sensor

(vi) Length of time observers maintained visual contact with marine mammal

(vii) Wave height

(viii) Visibility

(ix) Whether sighting was before, during, or after detonations/exercise, and how many minutes before or after

(x) Distance of marine mammal from actual detonations (or target spot if not yet detonated)—use four categories to define distance: (1) The modeled injury threshold radius for the largest explosive used in that exercise type in that OPAREA (762 m for SINKEX in the GoA TMAA); (2) the required exclusion zone (1 nm for SINKEX in the GoA TMAA); (3) the required observation distance (if different than the exclusion zone (2 nm for SINKEX in the GoA TMAA); and (4) greater than the required observed distance. For example, in this case, the observer would indicate if <762 m, from 762 m to 1 nm, from 1 nm to 2 nm, and >2 nm.

(xi) Observed behavior—Watchstanders will report, in plain language and without trying to categorize in any way, the observed behavior of the animals (such as animal closing to bow ride, paralleling course/speed, floating on surface and not swimming etc.), including speed and direction.

(xii) Resulting mitigation implementation—Indicate whether explosive detonations were delayed, ceased, modified, or not modified due to marine mammal presence and for how long.

(xiii) If observation occurs while explosives are detonating in the water, indicate munitions type in use at time of marine mammal detection.

Explosives Summary

The Navy is in the process of improving the methods used to track explosive use to provide increased granularity. To the extent practicable, the Navy will provide the information described below for all of their explosive exercises. Until the Navy is able to report in full the information below, they will provide an annual update on the Navy's explosive tracking methods, including improvements from the previous year.

(a) Total annual number of each type of explosive exercise (of those identified as part of the "specified activity" in this propsed rule) conducted in the GoA TMAA

(b) Total annual expended/detonated rounds (missiles, bombs, etc.) for each explosive type

GoA TMAA 5-Yr Comprehensive Report

The Navy shall submit to NMFS a draft report that analyzes and summarizes all of the multi-year marine mammal information gathered during ASW and explosive exercises for which annual reports are required (Annual GoA TMAA Exercise Reports and GoA TMAA Monitoring Plan Reports). This report shall be submitted at the end of the fourth year of the rule (December 2014), covering activities that have occurred through October 2014.

Comprehensive National ASW Report

By June 2014, the Navy shall submit a draft National Report that analyzes, compares, and summarizes the active sonar data gathered (through January 1, 2014) from the watchstanders and pursuant to the implementation of the Monitoring Plans for the Northwest Training Range Complex, the Southern California Range Complex, the Atlantic Fleet Active Sonar Training, the Hawaii Range Complex, the Mariana Islands Range Complex, and the Gulf of Alaska.

The Navy shall respond to NMFS comments and requests for additional information or clarification on the GoA TMAA Comprehensive Report, the Comprehensive National ASW report, the Annual GoA TMAA Exercise Report, or the Annual GoA TMAA Monitoring Plan Report (or the multi-Range Complex Annual Monitoring Plan Report, if that is how the Navy chooses to submit the information) if submitted within 3 months of receipt. These reports will be considered final after the Navy has adequately addressed NMFS' comments or provided the requested information, or three months after the submittal of the draft if NMFS does not comment by then.

Estimated Take of Marine Mammals

As mentioned previously, one of the main purposes of NMFS' effects assessments is to identify the permissible methods of taking, meaning: The nature of the take (*e.g.,* resulting from anthropogenic noise vs. from ship strike, etc.); the regulatory level of take (*i.e.,* mortality vs. Level A or Level B harassment) and the amount of take. The Potential Effects section identified the lethal responses, physical trauma, sensory impairment (permanent and temporary threshold shifts and acoustic masking), physiological responses (particular stress responses), and behavioral responses that could potentially result from exposure to MFAS/HFAS or underwater explosive detonations. This section will relate the potential effects to marine mammals from MFAS/HFAS and underwater detonation of explosives to the MMPA statutory definitions of Level A and Level B Harassment and attempt to quantify the effects that might occur from the specific training activities that the Navy is proposing in the GoA.

As mentioned previously, behavioral responses are context-dependent, complex, and influenced to varying degrees by a number of factors other than just received level. For example, an animal may respond differently to a sound emanating from a ship that is moving towards the animal than it would to an identical received level coming from a vessel that is moving away, or to a ship traveling at a different speed or at a different distance from the animal. At greater distances, though, the nature of vessel movements could also potentially not have any effect on the animal's response to the sound. In any case, a full description of the suite of factors that elicited a behavioral response would require a mention of the vicinity, speed and movement of the vessel, or other factors. So, while sound sources and the received levels are the primary focus of the analysis and those that are laid out quantitatively in the regulatory text, it is with the understanding that other factors related to the training are sometimes contributing to the behavioral responses of marine mammals, although they cannot be quantified.

Definition of Harassment

As mentioned previously, with respect to military readiness activities, Section 3(18)(B) of the MMPA defines "harassment" as: (i) Any act that injures or has the significant potential to injure a marine mammal or marine mammal stock in the wild [Level A Harassment]; or (ii) any act that disturbs or is likely to disturb a marine mammal or marine mammal stock in the wild by causing disruption of natural behavioral patterns, including, but not limited to, migration, surfacing, nursing, breeding, feeding, or sheltering, to a point where

such behavioral patterns are abandoned or significantly altered [Level B Harassment].

Level B Harassment

Of the potential effects that were described in the previous sections, the following are the types of effects that fall into the Level B Harassment category:

Behavioral Harassment—Behavioral disturbance that rises to the level described in the definition above, when resulting from exposures to MFAS/HFAS or underwater detonations (or another stressor), is considered Level B Harassment. Louder sounds (when other factors are not considered) are generally expected to elicit a stronger response. Some of the lower level physiological stress responses discussed in the previous sections will also likely co-occur with the predicted harassments, although these responses are more difficult to detect and fewer data exist relating these responses to specific received levels of sound. When Level B Harassment is predicted based on estimated behavioral responses, those takes may have a stress-related physiological component as well.

In the effects section above, we described the Southall *et al.* (2007) severity scaling system and listed some examples of the three broad categories of behaviors (0–3: Minor and/or brief behaviors; 4–6: Behaviors with higher potential to affect foraging, reproduction, or survival; 7–9: Behaviors considered likely to affect the aforementioned vital rates). Generally speaking, MMPA Level B Harassment, as defined in this document, would include the behaviors described in the 7–9 category, and a subset, dependent on context and other considerations, of the behaviors described in the 4–6 category. Behavioral harassment would not typically include behaviors ranked 0–3 in Southall *et al.* (2007).

Acoustic Masking and Communication Impairment—The severity or importance of an acoustic masking event can vary based on the length of time that the masking occurs, the frequency of the masking signal (which determines which sounds are masked, which may be of varying importance to the animal), and other factors. Some acoustic masking would be considered Level B Harassment, if it can disrupt natural behavioral patterns by interrupting or limiting the marine mammal's receipt or transmittal of important information or environmental cues.

TTS—As discussed previously, TTS can disrupt behavioral patterns by inhibiting an animal's ability to communicate with conspecifics and interpret other environmental cues important for predator avoidance and prey capture. However, depending on the degree (elevation of threshold in dB), duration (*i.e.,* recovery time), and frequency range of TTS, and the context in which it is experienced, TTS can have effects on marine mammals ranging from discountable to serious (similar to those discussed in auditory masking). For example, a marine mammal may be able to readily compensate for a brief, relatively small amount of TTS in a non-critical frequency range that takes place during a time when the animal is traveling through the open ocean, where ambient noise is lower and there are not as many competing sounds present. Alternatively, a larger amount and longer duration of TTS sustained during a time when communication is critical for successful mother/calf interactions could have more serious impacts if it was in the same frequency band as the necessary vocalizations and of a severity that impeded communication.

The following physiological mechanisms are thought to play a role in inducing auditory fatigue: Effects to sensory hair cells in the inner ear that reduce their sensitivity; modification of the chemical environment within the sensory cells; residual muscular activity in the middle ear; displacement of certain inner ear membranes; increased blood flow; and post-stimulatory reduction in both efferent and sensory neural output. Ward (1997) suggested that when these effects result in TTS rather than PTS, they are within the normal bounds of physiological variability and tolerance and do not represent a physical injury. Additionally, Southall *et al.* (2007) indicates that although PTS is a tissue injury, TTS is not, because the reduced hearing sensitivity following exposure to intense sound results primarily from fatigue, not loss, of cochlear hair cells and supporting structures and is reversible. Accordingly, NMFS classifies TTS (when resulting from exposure to either MFAS/HFAS or underwater detonations) as Level B Harassment, not Level A Harassment (injury).

Level A Harassment

Of the potential effects that were described in the previous sections, following are the types of effects that fall into the Level A Harassment category:

PTS—PTS (resulting from either exposure to MFAS/HFAS or explosive detonations) is irreversible and considered an injury. PTS results from exposure to intense sounds that cause a permanent loss of inner or outer cochlear hair cells or exceed the elastic limits of certain tissues and membranes in the middle and inner ears and result in changes in the chemical composition of the inner ear fluids. Although PTS is considered an injury, the effects of PTS on the fitness of an individual can vary based on the degree of TTS and the frequency band that it is in.

Tissue Damage Due to Acoustically Mediated Bubble Growth–A few theories suggest ways in which gas bubbles become enlarged through exposure to intense sounds (MFAS/HFAS) to the point where tissue damage results. In rectified diffusion, exposure to a sound field would cause bubbles to increase in size. A short duration of active sonar pings (such as that which an animal exposed to MFAS would be most likely to encounter) would not likely be long enough to drive bubble growth to any substantial size. Alternately, bubbles could be destabilized by high-level sound exposures such that bubble growth then occurs through static diffusion of gas out of the tissues. The degree of supersaturation and exposure levels observed to cause microbubble destabilization are unlikely to occur, either alone or in concert because of how close an animal would need to be to the sound source to be exposed to high enough levels, especially considering the likely avoidance of the sound source and the required mitigation. Still, possible tissue damage from either of these processes would be considered an injury or, potentially, mortality.

Tissue Damage Due to Behaviorally Mediated Bubble Growth—Several authors suggest mechanisms in which marine mammals could behaviorally respond to exposure to MFAS/HFAS by altering their dive patterns in a manner (unusually rapid ascent, unusually long series of surface dives, etc.) that might result in unusual bubble formation or growth ultimately resulting in tissue damage (*e.g.,* emboli). In this scenario, the rate of ascent would need to be sufficiently rapid to compromise behavioral or physiological protections against nitrogen bubble formation. There is considerable disagreement among scientists as to the likelihood of this phenomenon (Piantadosi and Thalmann, 2004; Evans and Miller, 2003). Although it has been argued that the tissue effects observed from recent beaked whale strandings are consistent with gas emboli and bubble-induced tissue separations (Jepson *et al.,* 2003; Fernandez *et al.,* 2005; Tyack *et al.,* 2006), nitrogen bubble formation as the cause of the traumas has not been verified. If tissue damage does occur by

this phenomenon, it would be considered an injury or, potentially, mortality.

Physical Disruption of Tissues Resulting From Explosive Shock Wave—Physical damage of tissues resulting from a shock wave (from an explosive detonation) is classified as an injury. Blast effects are greatest at the gas-liquid interface (Landsberg, 2000) and gas-containing organs, particularly the lungs and gastrointestinal tract, are especially susceptible (Goertner, 1982; Hill 1978; Yelverton *et al.,* 1973). Nasal sacs, larynx, pharynx, trachea, and lungs may be damaged by compression/expansion caused by the oscillations of the blast gas bubble (Reidenberg and Laitman, 2003). Severe damage (from the shock wave) to the ears can include tympanic membrane rupture, fracture of the ossicles, damage to the cochlea, hemorrhage, and cerebrospinal fluid leakage into the middle ear.

Vessel Strike, Ordnance Strike, Entanglement—Although not anticipated (or authorized) to occur, vessel strike, ordnance strike, or entanglement in materials associated with the specified action are considered Level A Harassment or mortality.

Acoustic Take Criteria

For the purposes of an MMPA incidental take authorization, three types of take are identified: Level B Harassment; Level A Harassment; and mortality (or serious injury leading to mortality). The categories of marine mammal responses (physiological and behavioral) that fall into the two harassment categories were described in the previous section.

Because the physiological and behavioral responses of the majority of the marine mammals exposed to MFAS/HFAS and underwater detonations cannot be detected or measured (because, *e.g.,* not all responses are visible external to animal, a portion of exposed animals are underwater, many animals are located many miles from observers and covering very large area, etc.) and because NMFS must authorize take prior to the impacts to marine mammals, a method is needed to estimate the number of individuals that will be taken, pursuant to the MMPA, based on the proposed action. To this end, NMFS developed acoustic criteria that estimate at what received level (when exposed to MFAS/HFAS or explosive detonations) Level B Harassment, Level A Harassment, and mortality (for explosives) of marine mammals would occur. The acoustic criteria for MFAS/HFAS and Underwater Detonations (IEER) are discussed below.

MFAS/HFAS Acoustic Criteria

Because relatively few applicable data exist to support acoustic criteria specifically for HFAS and because such a small percentage of the active sonar pings that marine mammals will likely be exposed to incidental to this activity come from an HFAS source (the vast majority come from MFAS sources), NMFS will apply the criteria developed for the MFAS to the HFAS as well.

NMFS utilizes three acoustic criteria to assess impacts from MFAS/HFAS: PTS (injury—Level A Harassment), TTS (Level B Harassment), and behavioral harassment (Level B Harassment). Because there is related quantitative data, the TTS criterion is a valuable tool for more specifically identifying the likely impacts to marine mammals from MFAS/HFAS, plus the PTS criteria are extrapolated from it. However, TTS is simply a subset of Level B Harassment—the likely ultimate effects of which are not anticipated to necessarily be any more severe than the behavioral impacts that would be expected to occur at the same received levels. Because the TTS and PTS criteria are derived similarly and the PTS criteria are extrapolated from the TTS data, the TTS and PTS acoustic criteria will be presented first, before the behavioral criteria.

For more information regarding these criteria, please see the Navy's DEIS for the GoA.

Level B Harassment Threshold (TTS)

As mentioned above, behavioral disturbance, acoustic masking, and TTS are all considered Level B Harassment. Marine mammals would usually be behaviorally disturbed at lower received levels than those at which they would likely sustain TTS, so the levels at which behavioral disturbances are likely to occur are considered the onset of Level B Harassment. The behavioral responses of marine mammals to sound are variable, context specific, and, therefore, difficult to quantify (see Risk Function section, below). Conversely, TTS is a physiological effect that has been studied and quantified in laboratory conditions. Because data exist to support an estimate of the received levels at which marine mammals will incur TTS, NMFS uses an acoustic criterion to estimate the number of marine mammals that might sustain TTS. TTS is a subset of Level B Harassment.

A number of investigators have measured TTS in marine mammals. These studies measured hearing thresholds in trained marine mammals before and after exposure to intense sounds. The existing cetacean TTS data are summarized in the following bullets:

- Schlundt *et al.* (2000) reported the results of TTS experiments conducted with five bottlenose dolphins and two belugas exposed to 1-second tones. This paper also includes a reanalysis of preliminary TTS data released in a technical report by Ridgway *et al.* (1997). At frequencies of 3, 10, and 20 kHz, sound pressure levels (SPLs) necessary to induce measurable amounts (6 dB or more) of TTS were between 192 and 201 dB re 1 μPa (exposure level (EL) = 192 to 201 dB re 1 μPa^2-s). The mean exposure SPL and EL for onset-TTS were 195 dB re 1 μPa and 195 dB re 1 μPa^2-s, respectively.
- Finneran *et al.* (2001, 2003, 2005) described TTS experiments conducted with bottlenose dolphins exposed to 3-kHz tones with durations of 1, 2, 4, and 8 seconds. Small amounts of TTS (3 to 6 dB) were observed in one dolphin after exposure to ELs between 190 and 204 dB re 1 μPa^2-s. These results were consistent with the data of Schlundt *et al.* (2000) and showed that the Schlundt *et al.* (2000) data were not significantly affected by the masking sound used. These results also confirmed that, for tones with different durations, the amount of TTS is best correlated with the exposure EL rather than the exposure SPL.
- Nachtigall *et al.* (2003) measured TTS in a bottlenose dolphin exposed to octave-band sound centered at 7.5 kHz. Nachtigall *et al.* (2003a) reported TTSs of about 11 dB measured 10 to 15 minutes after exposure to 30 to 50 minutes of sound with SPL 179 dB re 1 μPa (EL about 213 dB re μPa^2-s). No TTS was observed after exposure to the same sound at 165 and 171 dB re 1 μPa. Nachtigall *et al.* (2004) reported TTSs of around 4 to 8 dB 5 minutes after exposure to 30 to 50 minutes of sound with SPL 160 dB re 1 μPa (EL about 193 to 195 dB re 1 μPa^2-s). The difference in results was attributed to faster post-exposure threshold measurement; TTS may have recovered before being detected by Nachtigall *et al.* (2003). These studies showed that, for long-duration exposures, lower sound pressures are required to induce TTS than are required for short-duration tones.
- Finneran *et al.* (2000, 2002) conducted TTS experiments with dolphins and belugas exposed to impulsive sounds similar to those produced by distant underwater explosions and seismic waterguns. These studies showed that, for very short-duration impulsive sounds, higher sound pressures were required to

induce TTS than for longer duration tones.

• Finneran *et al.* (2007) conducted TTS experiments with bottlenose dolphins exposed to intense 20 kHz fatiguing tone. Behavioral and auditory evoked potentials (using sinusoidal amplitude modulated tones creating auditory steady state response [AASR]) were used to measure TTS. The fatiguing tone was either 16 (mean = 193 re 1μPa, SD = 0.8) or 64 seconds (185–186 re 1μPa) in duration. TTS ranged from 19–33 dB from behavioral measurements and 40–45 dB from ASSR measurements.

• Kastak *et al.* (1999a, 2005) conducted TTS experiments with three species of pinnipeds. California sea lion, northern elephant seal, and a Pacific harbor seal were exposed to continuous underwater sounds at levels of 80 and 95 dB sensation level at 2.5 and 3.5 kHz for up to 50 minutes. Mean TTS shifts of up to 12.2 dB occurred with the harbor seals showing the largest shift of 28.1 dB. Increasing the sound duration had a greater effect on TTS than increasing the sound level from 80 to 95 dB.

Some of the more important data obtained from these studies are onset-TTS levels (exposure levels sufficient to cause a just-measurable amount of TTS) often defined as 6 dB of TTS (*e.g.,* Schlundt *et al.,* 2000) and the fact that energy metrics (sound exposure levels (SEL) which include a duration component) better predict when an animal will sustain TTS than pressure (SPL) alone. NMFS' TTS criterion (which indicates the received level at which onset TTS (<6 dB) is induced) for MFAS/HFAS and cetaceans is 195 dB re 1 μPa^2-s (based on mid-frequency cetaceans; no published data exist on auditory effects of noise in low- or high-frequency cetaceans) (Southall *et al.* (2007)).

A detailed description of how this TTS criterion was derived from the results of the above studies may be found in Chapter 3 of Southall *et al.* (2007), as well as the Navy's GoA LOA application.

Level A Harassment Threshold (PTS)

For acoustic effects, because the tissues of the ear appear to be the most susceptible to the physiological effects of sound, and because threshold shifts tend to occur at lower exposures than other more serious auditory effects, NMFS has determined that PTS is the best indicator for the smallest degree of injury that can be measured. Therefore, the acoustic exposure associated with onset-PTS is used to define the lower limit of Level A harassment.

PTS data do not currently exist for marine mammals and are unlikely to be obtained due to ethical concerns. However, PTS levels for these animals may be estimated using TTS data from marine mammals and relationships between TTS and PTS that have been discovered through study of terrestrial mammals. NMFS uses the following acoustic criterion for injury of cetaceans: 215 dB re 1 μPa^2-s (based on mid-frequency cetaceans; no published data exist on auditory effects of noise in low- or high-frequency cetaceans) (Southall *et al.* (2007)).

This criterion is based on a 20-dB increase in SEL over that required for onset-TTS. Extrapolations from terrestrial mammal data indicate that PTS occurs at 40 dB or more of TS, and that TS growth occurs at a rate of approximately 1.6 dB TS per dB increase in EL. There is a 34-dB TS difference between onset-TTS (6 dB) and onset-PTS (40 dB). Therefore, an animal would require approximately 20 dB of additional exposure (34 dB divided by 1.6 dB) above onset-TTS to reach PTS. A detailed description of how TTS criteria were derived from the results of the above studies may be found in Chapter 3 of Southall *et al.* (2007), as well as the Navy's GoA LOA application. Southall *et al.* (2007) recommend a precautionary dual criteria for TTS (230 dB re 1 μPa (SPL peak pressure) in addition to 215 dB re 1 μPa^2-s (SEL)) to account for the potentially damaging transients embedded within non-pulse exposures. However, in the case of MFAS/HFAS, the distance at which an animal would receive 215 dB (SEL) is farther from the source (*i.e.,* more conservative) than the distance at which they would receive 230 dB (SPL peak pressure) and therefore, it is not necessary to consider 230 dB peak.

We note here that behaviorally mediated injuries (such as those that have been hypothesized as the cause of some beaked whale strandings) could potentially occur in response to received levels lower than those believed to directly result in tissue damage. As mentioned previously, data to support a quantitative estimate of these potential effects (for which the exact mechanism is not known and in which factors other than received level may play a significant role) does not exist. However, based on the number of years (more than 60) and number of hours of MFAS per year that the U.S. (and other countries) has operated compared to the reported (and verified) cases of associated marine mammal strandings, NMFS believes that the probability of these types of injuries is very low.

Level B Harassment Risk Function (Behavioral Harassment)

In 2006, NMFS issued the first MMPA authorization to allow the take of marine mammals incidental to MFAS (to the Navy for RIMPAC). For that authorization, NMFS used 173 dB SEL as the criterion for the onset of behavioral harassment (Level B Harassment). This type of single number criterion is referred to as a step function, in which (in this example) all animals estimated to be exposed to received levels above 173 db SEL would be predicted to be taken by Level B Harassment and all animals exposed to less than 173dB SEL would not be taken by Level B Harassment. As mentioned previously, marine mammal behavioral responses to sound are highly variable and context specific (affected by differences in acoustic conditions; differences between species and populations; differences in gender, age, reproductive status, or social behavior; or the prior experience of the individuals), which does not support the use of a step function to estimate behavioral harassment.

Unlike step functions, acoustic risk continuum functions (which are also called "exposure-response functions," "dose-response functions," or "stress-response functions" in other risk assessment contexts) allow for probability of a response that NMFS would classify as harassment to occur over a range of possible received levels (instead of one number) and assume that the probability of a response depends first on the "dose" (in this case, the received level of sound) and that the probability of a response increases as the "dose" increases (see Figure 1a). In January 2009, NMFS issued three final rules governing the incidental take of marine mammals (Navy's Hawaii Range Complex, Southern California Range Complex, and Atlantic Fleet Active Sonar Training) that used a risk continuum to estimate the percent of marine mammals exposed to various levels of MFAS that would respond in a manner NMFS considers harassment. The Navy and NMFS have previously used acoustic risk functions to estimate the probable responses of marine mammals to acoustic exposures for other training and research programs. Examples of previous application include the Navy FEISs on the SURTASS LFA sonar (U.S. Department of the Navy, 2001c); the North Pacific Acoustic Laboratory experiments conducted off the Island of Kauai (Office of Naval Research, 2001), and the

Supplemental EIS for SURTASS LFA sonar (U.S. Department of the Navy, 2007d). As discussed in the Effects section, factors other than received level (such as distance from or bearing to the sound source) can affect the way that marine mammals respond; however, data to support a quantitative analysis of those (and other factors) do not currently exist. NMFS will continue to modify these criteria as new data that meet NMFS standards of quality become available and can be appropriately and effectively incorporated.

The particular acoustic risk functions developed by NMFS and the Navy (see Figures 1a and 1b) estimate the probability of behavioral responses to MFAS/HFAS (interpreted as the percentage of the exposed population) that NMFS would classify as harassment for the purposes of the MMPA given exposure to specific received levels of MFAS/HFAS. The mathematical function (below) underlying this curve is a cumulative probability distribution adapted from a solution in Feller (1968) and was also used in predicting risk for the Navy's SURTASS LFA MMPA authorization as well.

$$R = \frac{1-\left(\frac{L-B}{K}\right)^{-A}}{1-\left(\frac{L-B}{K}\right)^{-2A}}$$

Where:

R = Risk (0–1.0)

L = Received level (dB re: 1 μPa)

B = Basement received level = 120 dB re: 1 μPa

K = Received level increment above B where 50-percent risk = 45 dB re: 1 μPa

A = Risk transition sharpness parameter = 10 (odontocetes and pinnipeds) or 8 (mysticetes)

In order to use this function to estimate the percentage of an exposed population that would respond in a manner that NMFS classifies as Level B Harassment, based on a given received level, the values for B, K and A need to be identified.

B Parameter (Basement)—The B parameter is the estimated received level below which the probability of disruption of natural behavioral patterns, such as migration, surfacing, nursing, breeding, feeding, or sheltering, to a point where such behavioral patterns are abandoned or significantly altered approaches zero for the MFAS/HFAS risk assessment. At this received level, the curve would predict that the percentage of the exposed population that would be taken by Level B Harassment approaches zero. For MFAS/HFAS, NMFS has determined that B = 120 dB. This level is based on a broad overview of the levels at which many species have been reported responding to a variety of sound sources.

K Parameter (representing the 50 percent Risk Point)—The K parameter is based on the received level that corresponds to 50 percent risk, or the received level at which we believe 50 percent of the animals exposed to the designated received level would respond in a manner that NMFS classifies as Level B Harassment. The K parameter (K = 45 dB) is based on three datasets in which marine mammals exposed to mid-frequency sound sources were reported to respond in a manner that NMFS would classify as Level B Harassment. There is widespread consensus that marine mammal responses to MFA sound signals need to be better defined using controlled exposure experiments (Cox *et al.,* 2006; Southall *et al.,* 2007). The Navy is contributing to an ongoing three-phase behavioral response study in the Bahamas that is expected to provide some initial information on beaked whales, the species identified as the most sensitive to MFAS. NMFS is leading this international effort with scientists from various academic institutions and research organizations to conduct studies on how marine mammals respond to underwater sound exposures. The results from Phase 1 of this study are discussed in the Potential Effects of Specified Activities on Marine Mammals section, and the preliminary results from Phase 2 became available in October 2008. Phase 3 was conducted in the Mediterranean Sea in the summer of 2009. Additionally, the Navy recently tagged whales in conjunction with the 2008 RIMPAC exercises; however, analyses of these data are not yet complete. Until additional appropriate data are available, however, NMFS and the Navy have determined that the following three data sets are most applicable for direct use in establishing the K parameter for the MFAS/HFAS risk function. These data sets, summarized below, represent the only known data that specifically relate altered behavioral responses (that NMFS would consider Level B Harassment) to exposure—at specific received levels—to MFAS and sources within or having components within the range of MFAS (1–10 kHz).

Even though these data are considered the most representative of the proposed specified activities, and therefore the most appropriate on which to base the K parameter (which basically determines the midpoint) of the risk function, these data have limitations, which are discussed in Appendix D of the Navy's DEIS for the GoA.

1. *Controlled Laboratory Experiments With Odontocetes (SSC Dataset)*—Most of the observations of the behavioral responses of toothed whales resulted from a series of controlled experiments on bottlenose dolphins and beluga whales conducted by researchers at SSC's facility in San Diego, California (Finneran *et al.,* 2001, 2003, 2005; Finneran and Schlundt, 2004; Schlundt *et al.,* 2000). In experimental trials (designed to measure TTS) with captive marine mammals trained to perform tasks on command, scientists evaluated whether the marine mammals still performed these tasks when exposed to mid-frequency tones. Altered behavior during experimental trials usually involved refusal of animals to return to the site of the sound stimulus, but also included attempts to avoid an exposure in progress, aggressive behavior, or refusal to further participate in tests.

Finneran and Schlundt (2004) examined behavioral observations recorded by the trainers or test coordinators during the Schlundt *et al.* (2000) and Finneran *et al.* (2001, 2003, 2005) experiments. These included observations from 193 exposure sessions (fatiguing stimulus level > 141 dB re 1μPa) conducted by Schlundt *et al.* (2000) and 21 exposure sessions conducted by Finneran *et al.* (2001, 2003, 2005). The TTS experiments that supported Finneran and Schlundt (2004) are further explained below.

Schlundt *et al.* (2000) provided a detailed summary of the behavioral responses of trained marine mammals during TTS tests conducted at SSC San Diego with 1-sec tones and exposure frequencies of 0.4 kHz, 3 kHz, 10 kHz, 20 kHz and 75 kHz. Schlundt *et al.* (2000) reported eight individual TTS experiments. The experiments were conducted in San Diego Bay. Because of the variable ambient noise in the bay, low-level broadband masking noise was used to keep hearing thresholds consistent despite fluctuations in the ambient noise. Schlundt *et al.* (2000) reported that "behavioral alterations," or deviations from the behaviors the animals being tested had been trained to exhibit, occurred as the animals were exposed to increasing fatiguing stimulus levels.

Finneran *et al.* (2001, 2003, 2005) conducted two separate TTS experiments using 1-sec tones at 3 kHz. The test methods were similar to that of Schlundt *et al.* (2000) except the tests were conducted in a pool with very low ambient noise level (below 50 dB re 1 μPa^2/hertz [Hz]), and no masking noise was used. In the first, fatiguing sound

levels were increased from 160 to 201 dB SPL. In the second experiment, fatiguing sound levels between 180 and 200 dB SPL were randomly presented.

Bottlenose dolphins exposed to 1-sec intense tones exhibited short-term changes in behavior above received sound levels of 178 to 193 dB re 1 μPa (rms), and beluga whales did so at received levels of 180 to 196 dB and above.

2. *Mysticete Field Study (Nowacek et al., 2004)*—The only available and applicable data relating mysticete responses to exposure to mid-frequency sound sources is from Nowacek *et al.* (2004). Nowacek *et al.* (2004) documented observations of the behavioral response of North Atlantic right whales exposed to alert stimuli containing mid-frequency components in the Bay of Fundy. Investigators used archival digital acoustic recording tags (DTAG) to record the behavior (by measuring pitch, roll, heading, and depth) of right whales in the presence of an alert signal, and to calibrate received sound levels. The alert signal was 18 minutes of exposure consisting of three 2-min signals played sequentially three times over. The three signals had a 60 percent duty cycle and consisted of: (1) Alternating 1-sec pure tones at 500 Hz and 850 Hz; (2) a 2-sec logarithmic down-sweep from 4,500 Hz to 500 Hz; and (3) a pair of low (1,500 Hz)-high (2,000 Hz) sine wave tones amplitude modulated at 120 Hz and each 1-sec long. The purposes of the alert signal were (a) to pique the mammalian auditory system with disharmonic signals that cover the whales' estimated hearing range; (b) to maximize the signal to noise ratio (obtain the largest difference between background noise); and (c) to provide localization cues for the whale. The maximum source level used was 173 dB SPL.

Nowacek *et al.* (2004) reported that five out of six whales exposed to the alert signal with maximum received levels ranging from 133 to 148 dB re 1 μPa significantly altered their regular behavior and did so in identical fashion. Each of these five whales did the following: (i) Abandoned their current foraging dive prematurely as evidenced by curtailing their "bottom time"; (ii) executed a shallow-angled, high power (*i.e.* significantly increased fluke stroke rate) ascent; (iii) remained at or near the surface for the duration of the exposure, an abnormally long surface interval; and (iv) spent significantly more time at subsurface depths (1–10 m) compared with normal surfacing periods when whales normally stay within 1.1 yd (1 m) of the surface.

3. *Odontocete Field Data (Haro Strait—U.S. Ship (USS) SHOUP)*—In May 2003, killer whales (*Orcinus orca*) were observed exhibiting behavioral responses generally described as avoidance behavior while the USS SHOUP was engaged in MFAS in the Haro Strait in the vicinity of Puget Sound, Washington. Those observations have been documented in three reports developed by the Navy and NMFS (NMFS, 2005; Fromm, 2004a, 2004b; DON, 2003). Although these observations were made in an uncontrolled environment, the sound field that may have been associated with the active sonar operations was estimated using standard acoustic propagation models that were verified (for some but not all signals) based on calibrated in situ measurements from an independent researcher who recorded the sounds during the event. Behavioral observations were reported for the group of whales during the event by an experienced marine mammal biologist who happened to be on the water studying them at the time. The observations associated with the USS SHOUP provide the only data set available of the behavioral responses of wild, non-captive animals upon actual exposure to AN/SQS–53 sonar.

The U.S. Department of Commerce (NMFS, 2005a), U.S. Department of the Navy (2004b), and Fromm (2004a, 2004b) documented reconstruction of sound fields produced by USS SHOUP associated with the behavioral response of killer whales observed in Haro Strait. Observations from this reconstruction included an approximate closest approach time which was correlated to a reconstructed estimate of received level. Observations from this reconstruction included an estimate of 169.3 dB SPL which represents the mean level at a point of closest approach within a 500-m wide area which the animals were exposed. Within that area, the estimated received levels varied from approximately 150 to 180 dB SPL.

Calculation of K Parameter—NMFS and the Navy used the mean of the following values to define the midpoint of the function: (1) The mean of the lowest received levels (185.3 dB) at which individuals responded with altered behavior to 3 kHz tones in the SSC data set; (2) the estimated mean received level value of 169.3 dB produced by the reconstruction of the USS SHOUP incident in which killer whales exposed to MFAS (range modeled possible received levels: 150 to 180 dB); and (3) the mean of the five maximum received levels at which Nowacek *et al.* (2004) observed significantly altered responses of right whales to the alert stimuli than to the control (no input signal) is 139.2 dB SPL. The arithmetic mean of these three mean values is 165 dB SPL. The value of K is the difference between the value of B (120 dB SPL) and the 50 percent value of 165 dB SPL; therefore, K = 45.

A Parameter (Steepness)—NMFS determined that a steepness parameter (A) = 10 is appropriate for odontocetes (except harbor porpoises) and pinnipeds and A = 8 is appropriate for mysticetes.

The use of a steepness parameter of A = 10 for odontocetes for the MFAS/HFAS risk function was based on the use of the same value for the SURTASS LFA risk continuum, which was supported by a sensitivity analysis of the parameter presented in Appendix D of the SURTASS/LFA FEIS (DoN, 2001c). As concluded in the SURTASS FEIS/EIS, the value of A = 10 produces a curve that has a more gradual transition than the curves developed by the analyses of migratory gray whale studies (Malme *et al.,* 1984; Buck and Tyack, 2000; and SURTASS LFA Sonar EIS, Subchapters 1.43, 4.2.4.3 and Appendix D, and NMFS, 2008).

NMFS determined that a lower steepness parameter (A = 8), resulting in a shallower curve, was appropriate for use with mysticetes and MFAS/HFAS. The Nowacek *et al.* (2004) dataset contains the only data illustrating mysticete behavioral responses to a sound source that encompasses frequencies in the mid-frequency sound spectrum. A shallower curve (achieved by using A = 8) better reflects the risk of behavioral response at the relatively low received levels at which behavioral responses of right whales were reported in the Nowacek *et al.* (2004) data. Compared to the odontocete curve, this adjustment results in an increase in the proportion of the exposed population of mysticetes being classified as behaviorally harassed at lower RLs, such as those reported in the Novacek report, and is supported by the only representative dataset currently available.

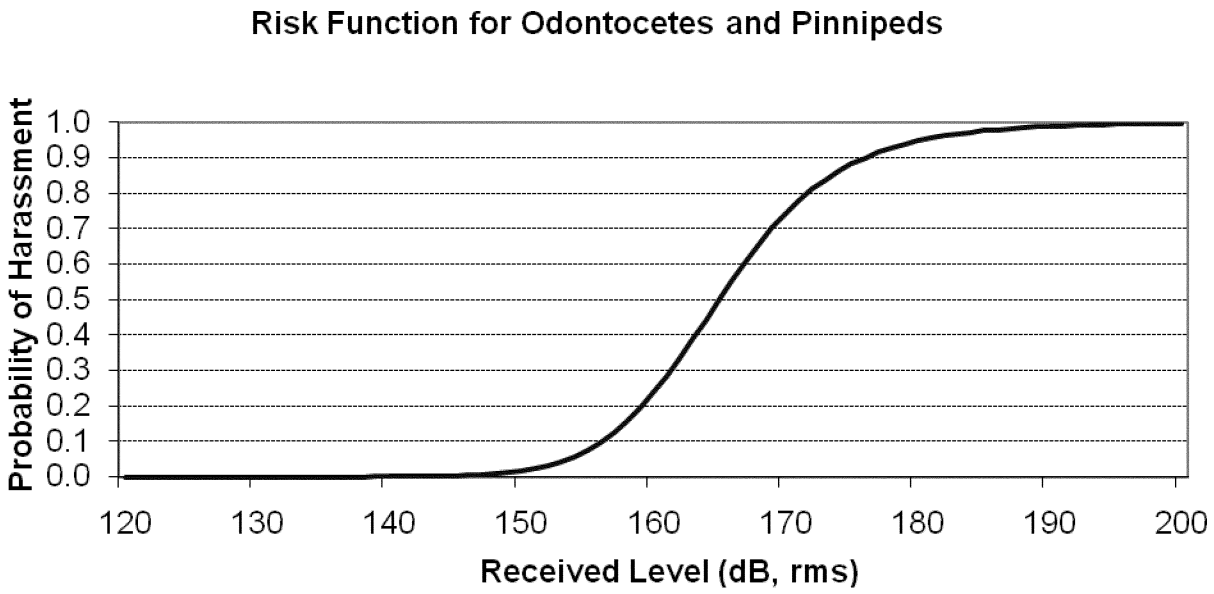

Figure 1a. Risk function for odontocetes and pinnipeds. B = 120 dB, K = 45 dB, A = 10

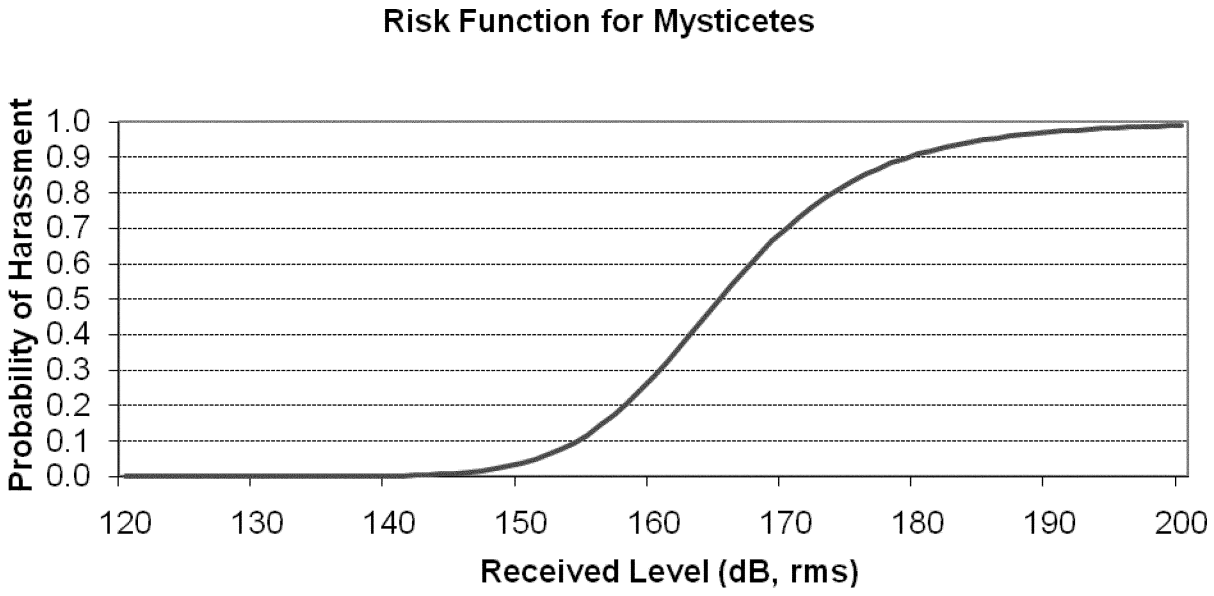

Figure 1b. Risk function for mysticetes. B=120 dB, K=45 dB, A=8.

Basic Application of the Risk Function—The risk function is used to estimate the percentage of an exposed population that is likely to exhibit behaviors that would qualify as harassment (as that term is defined by the MMPA applicable to military readiness activities, such as the Navy's testing and training with MFAS) at a given received level of sound. For example, at 165 dB SPL (dB re: 1μPa rms), the risk (or probability) of harassment is defined according to this function as 50 percent, and Navy/NMFS applies that by estimating that 50 percent of the individuals exposed at that received level are likely to respond by exhibiting behavior that NMFS would classify as behavioral harassment. The risk function is not applied to individual animals, only to exposed populations.

The data primarily used to produce the risk function (the K parameter) were compiled from four species that had been exposed to sound sources in a variety of different circumstances. As a result, the risk function represents a general relationship between acoustic exposures and behavioral responses that is then applied to specific circumstances. That is, the risk function represents a relationship that is deemed to be generally true, based on the limited, best-available science, but may not be true in specific circumstances. In particular, the risk function, as currently derived, treats the received level as the only variable that is relevant to a marine mammal's behavioral response. However, we know that many other variables—the marine mammal's gender, age, and prior experience; the activity it is engaged in during an exposure event, its distance from a

sound source, the number of sound sources, and whether the sound sources are approaching or moving away from the animal—can be critically important in determining whether and how a marine mammal will respond to a sound source (Southall *et al.,* 2007). The data that are currently available do not allow for incorporation of these other variables in the current risk functions; however, the risk function represents the best use of the data that are available. Additionally, although these other factors cannot be taken into consideration quantitatively in the risk function, NMFS considers these other variables qualitatively in our analysis, when applicable data are available.

As more specific and applicable data become available for MFAS/HFAS sources, NMFS can use these data to modify the outputs generated by the risk function to make them more realistic. Ultimately, data may exist to justify the use of additional, alternate, or multi-variate functions. For example, as mentioned previously, the distance from the sound source and whether it is perceived as approaching or moving away can affect the way an animal responds to a sound (Wartzok *et al.,* 2003). In the GoA TMAA example, animals exposed to received levels between 120 and 130 dB will likely be 76 to 105 km away from a sound source; those distances could influence whether those animals perceive the sound source as a potential threat, and their behavioral responses to that threat. Though there are data showing responses of certain marine mammal species to mid-frequency sound sources at that received level, NMFS does not currently have any data that describe the response of marine mammals to mid-frequency sounds at that distance, much less data that compare responses to similar sound levels at varying distances (much less for MFAS/HFAS). However, if applicable data meeting NMFS standards were to become available, NMFS would re-evaluate the risk function and incorporate any additional variables into the "take" estimates.

Explosive Detonation Criteria

The criteria for mortality, Level A Harassment, and Level B Harassment resulting from explosive detonations were initially developed for the Navy's Seawolf and Churchill ship-shock trials and have not changed. The criteria, which are applied to cetaceans and pinnipeds, are summarized in Table 7. Additional information regarding the derivation of these criteria is available in the Navy's DEIS for the GoA TMAA, the LOA application, and in the Navy's CHURCHILL FEIS (DoN, 2001c).

Type of Effect	Criteria	Metric	Threshold	MMPA
Mortality	Onset of Extensive Lung Injury	Goertner modified positive impulse	indexed to 30.5 psi-msec (assumes 100 percent small animal at 26.9 lbs)	Mortality
Injurious Physiological	50% Tympanic Membrane Rupture	Energy flux density	1.17 in-lb/in^2 (about 205 dB re 1 microPa^2-sec)	Level A Harassment
Injurious Physiological	Onset Slight Lung Injury	Goertner modified positive impulse	indexed to 13 psi-msec (assumes 100 percent small animal at 26.9 lbs)	Level A Harassment
Non-injurious Physiological	TTS	Greatest energy flux density level in any 1/3-octave band (> 100 Hz for toothed whales and > 10 Hz for baleen whales) - for total energy over all exposures	182 dB re 1 microPa^2-sec	Level B Harassment
Non-injurious Physiological	TTS	Peak pressure over all exposures	23 psi	Level B Harassment
Non-injurious Behavioral	Multiple Explosions Without TTS	Greatest energy flux density level in any 1/3-octave (> 100 Hz for toothed whales and > 10 Hz for baleen whales) - for total energy over all exposures (multiple explosions only)	177 dB re 1 microPa^2-sec	Level B Harassment

Table 7. Summary of Explosive Criteria

Estimates of Potential Marine Mammal Exposure

Estimating the take that will result from the proposed activities entails the following three general steps: (1) Propagation model estimates animals exposed to sources at different levels; (2) further modeling determines number of exposures to levels indicated in criteria above (*i.e.,* number of takes); and (3) post-modeling corrections refine estimates to make them more accurate.

More information regarding the models used, the assumptions used in the models, and the process of estimating take is available in either Appendix B of the Navy's Application or Appendix D of the Navy's DEIS.

(1) In order to quantify the types of take described in previous sections that are predicted to result from the Navy's specified activities, the Navy first uses a sound propagation model that predicts the number of animals that will be exposed to a range of levels of pressure and energy (of the metrics used in the criteria) from MFAS/HFAS and explosive detonations based on several important pieces of information, including:

- Characteristics of the sound sources
- Active sonar source characteristics include: Source level (with horizontal and vertical directivity corrections), source depth, center frequency, source directivity (horizontal/vertical beam width and horizontal/vertical steer direction), and ping spacing
- Explosive source characteristics include: The weight of an explosive, the type of explosive, the detonation depth, and number of successive explosions
- Transmission loss (in up to 20 representative environmental provinces in two seasons) based on: Water depth; sound speed variability throughout the water column (warm season exhibits a weak surface duct, cold season exhibits a relatively strong surface duct); bottom geo-acoustic properties (bathymetry); and surface roughness, as determined by wind speed
- The estimated density of each marine mammal species in the GoA TMAA (see Table 4), horizontally distributed uniformly and vertically distributed according to dive profiles based on field data

(2) Next, the criteria discussed in the previous section are applied to the estimated exposures to predict the number of exposures that exceed the criteria, *i.e.,* the number of takes by Level B Harassment, Level A Harassment, and mortality.

(3) During the development of the EIS for GoA TMAA, NMFS and the Navy determined that the output of the model could be made more realistic by applying post-modeling corrections to account for the following:

- Acoustic footprints for active sonar sources must account for land masses (by subtracting them out)
- Acoustic footprints for active sonar sources should not be added independently, rather, the degree to which the footprints from multiple ships participating in the same exercise would typically overlap needs to be taken into consideration
- Acoustic modeling should account for the maximum number of individuals of a species that could potentially be exposed to active sonar within the course of 1 day or a discrete continuous sonar event if less than 24 hrs

Last, the Navy's specified activities have been described based on best estimates of the number of MFAS/HFAS hours that the Navy will conduct. The exact number of hours may vary from year to year, but will not exceed the 5-year total indicated in Table 8 (by multiplying the yearly estimate by 5) by more than 10 percent. NMFS estimates that a 10-percent increase in active sonar hours would result in approximately a 10-percent increase in the number of takes, and we have considered this possibility in our analysis.

The Navy's model provides a systematic and repeatable way of estimating the number of animals that will be taken by Level A and Level B Harassment. The model is based on the sound propagation characteristics of the sound sources, physical characteristics of the surrounding environment, and a uniform density of marine mammals. As mentioned in the previous sections, many other factors will likely affect how and the degree to which marine mammals are impacted both at the individual and species level by the Navy's activity (such as social ecology of the animals, long term exposures in one area, etc.); however, in the absence of quantitative data, NMFS has, and will continue, to evaluate that sort of information qualitatively.

BILLING CODE 3510–22–P

Species	Modeled Sonar Exposures to Indicated Thresholds			Modeled Explosive Exposures to Indicated Thresholds				NMFS Proposed Annual Take Authorization			5-Year Proposed Take Authorization
	Level B Exposures		Level A Exposures (PTS)	Level B Exposures		Level A Exposures	Mortality				
	Risk Function (Behavioral)	TTS		Sub-TTS	TTS			Level B Harassment	Level A Harassment	Mortality	
ESA Species											
Blue whale	1	0	0	1	0	0	0	2	0	0	10
Fin whale	10,998	21	0	13	5	0	0	11,037	0	0	55,185
Humpback whale	1388	6	0	1	0	0	0	1395	0	0	6975
North Pacific right whale	1	0	0	1	0	0	0	2	0	0	10
Sei whale	4	0	0	4	0	0	0	8	0	0	40
Sperm whale	327	1	0	1	0	0	0	329	0	0	1645
Stellar sea lion	11,104	1	0	2	1	0	0	11,108	0	0	55,540
Mysticetes											
Gray whale	384	1	0	3	0	0	0	388	0	0	1940
Minke whale	677	2	0	2	0	0	0	681	0	0	3405
Odontocetes											
Baird's beaked whale	485	1	0	1	0	0	0	487	0	15 over the couse of 5-yr rule	2435
Stejneger's beaked whale	2302	6	0	4	1	0	0	2313	0		11,565
Cuvier's beaked whale	2302	6	0	3	1	0	0	2312	0		11,560
Dall's porpoise	205,485	768	1	84	37	2	1	206,374	0	0	1,031,870
Harbor porpoise	5438	0	0	2	0	0	0	5440	0	0	27,200
Killer whale	10,602	41	0	4	2	0	0	10,649	0	0	53,245
Pacific white-sided dolphin	16,912	61	0	12	6	1	0	16,991	0	0	84,955
Pinnipeds											
California sea lion	1	0	0	1	0	0	0	2	0	0	10
Harbor seal	1	0	0	1	0	0	0	2	0	0	10
Northern elephant seal	2064	0	0	4	1	0	0	2069	0	0	10345
Northern fur seal	154,144	16	0	26	16	1	0	154,202	0	0	771,010
Total	**424,620**	**931**	**1**	**170**	**70**	**4**	**1**	**425,791**	**0**		**2,128,955**

Table 8. Navy's estimated marine mammal exposures to the thresholds and NMFS proposed take authorization.

BILLING CODE 3510–22–C

Mortality

Evidence from five beaked whale strandings, all of which have taken place outside the GoA TMAA, and have occurred over approximately a decade, suggests that the exposure of beaked whales to MFAS in the presence of certain conditions (*e.g.,* multiple units using active sonar, steep bathymetry, constricted channels, strong surface ducts, etc.) may result in strandings, potentially leading to mortality. Although not all five of these physical factors believed to have contributed to the likelihood of beaked whale strandings are present, in their aggregate, in the GoA TMA, scientific uncertainty exists regarding what other factors, or combination of factors, may contribute to beaked whale strandings. Accordingly, to allow for scientific uncertainty regarding contributing causes of beaked whale strandings and the exact behavioral or physiological mechanisms that can lead to the ultimate physical effects (stranding and/or death), the Navy has requested authorization for (and NMFS is proposing authorizing) take, by injury or mortality. Although NMFS proposes to authorize take by injury or mortality of up to 15 beaked whales over the course of the 5-yr regulations, the Navy's model did not predict injurious takes of beaked whales and neither NMFS, nor the Navy anticipates that marine mammal strandings or mortality will result from the operation of MFAS during Navy exercises within the GoA TMAA.

Effects on Marine Mammal Habitat

The Navy's proposed training exercises could potentially affect marine mammal habitat through the introduction of pressure, sound, and expendable materials into the water column, which in turn could impact prey species of marine mammals, or cause bottom disturbance or changes in water quality. Each of these components was considered in the GoA TMAA DEIS and was determined by the Navy to have no significant or long term effect on marine mammal habitat. Based on the information below and the supporting information included in the Navy's DEIS, NMFS has preliminarily determined that the GoA TMAA training activities will not have significant or long-term impacts on marine mammal habitat. Unless the sound source or explosive detonation is stationary and/or continuous over a long duration in one area, the effects of the introduction of sound into the environment are generally considered to have a less severe impact on marine mammal habitat than the physical alteration of the habitat. Marine mammals may be temporarily displaced from areas where Navy training is occurring, but the area will likely be utilized again after the activities have ceased. A summary of the conclusions are included in subsequent sections.

Effects on Food Resources

Fish

The Navy's DEIS includes a detailed discussion of the effects of active sonar on marine fish. In summary, studies have indicated that acoustic communication and orientation of fish may be restricted by anthropogenic sound in their environment. However, the vast majority of fish species studied to date are hearing generalists and cannot hear sounds above 500 to 1,500 Hz (0.5 to 1.5 kHz), depending upon the species. Therefore, these fish species are not likely to be affected behaviorally from higher frequency sounds such as MFAS/HFAS. Moreover, even those marine species that may hear above 1.5 kHz, such as a few sciaenids and the clupeids (and relatives), have relatively poor hearing above 1.5 kHz as compared to their hearing sensitivity at lower frequencies, so it is likely that the fish will only actually hear the sounds if the fish and source were fairly close to one another. Finally, since the vast majority of sounds that are of biological relevance to fish are below 1 kHz (*e.g.,* Zelick *et al.,* 1999; Ladich and Popper, 2004), even if a fish detects a mid- or high-frequency sound, these sounds will not likely mask detection of lower frequency biologically relevant sounds. Thus, based on the available information, a reasonable conclusion is that there will be few, and more likely no, impacts on the behavior of fish from active sonar.

Though mortality has been shown to occur in one species, a hearing specialist, as a result of exposure to non-impulsive sources, the available evidence does not suggest that exposures such as those anticipated from MFAS/HFAS would result in significant fish mortality on a population level. The mortality that was observed was considered insignificant in light of natural daily mortality rates. Experiments have shown that exposure to loud sound can result in significant threshold shifts in certain fish that are classified as hearing specialists (but not those classified as hearing generalists). Threshold shifts are temporary, and considering the best available data, no data exist that demonstrate any long-term negative effects on marine fish from underwater sound associated with active sonar activities. Further, while fish may respond behaviorally to mid-frequency sources, this behavioral modification is only expected to be brief and not biologically significant.

There are currently no well-established thresholds for estimating effects to fish from explosives other than mortality models. Fish that are located in the water column, in proximity to the source of detonation could be injured, killed, or disturbed by the impulsive sound and possibly temporarily leave the area. Continental Shelf Inc. (2004) summarized a few studies conducted to determine effects associated with removal of offshore structures (*e.g.,* oil rigs) in the Gulf of Mexico. Their findings revealed that at very close range, underwater explosions are lethal to most fish species regardless of size, shape, or internal anatomy. For most situations, cause of death in fishes has been massive organ and tissue damage and internal bleeding. At longer range, species with gas-filled swimbladders (*e.g.,* snapper, cod, and striped bass) are more susceptible than those without swimbladders (*e.g.,* flounders, eels). Studies also suggest that larger fishes are generally less susceptible to death or injury than small fishes. Moreover, elongated forms that are round in cross section are less at risk than deep-bodied forms; and orientation of fish relative to the shock wave may affect the extent of injury. Open water pelagic fish (*e.g.,* mackerel) also seem to be less affected than reef fishes. The results of most studies are dependent upon specific biological, environmental, explosive, and data recording factors.

The huge variations in the fish population, including numbers, species, sizes, and orientation and range from the detonation point, make it very difficult to accurately predict mortalities at any specific site of detonation. Most fish species experience a large number of natural mortalities, especially during early life-stages, and any small level of mortality caused by the GoA TMAA training exercises involving explosives will likely be insignificant to the population as a whole.

Invertebrates

Very little is known about sound detection and use of sound by invertebrates (see Budelmann 1992a, 1992b; Popper *et al.,* 2001 for reviews). The limited data show that some crabs are able to detect sound, and there has been the suggestion that some other groups of invertebrates are also able to detect sounds. In addition, cephalopods (octopus and squid) and decapods (lobster, shrimp, and crab) are thought to sense low-frequency sound

(Budelmann, 1992b). Packard *et al.* (1990) reported sensitivity to sound vibrations between 1 and 100 Hz for three species of cephalopods. McCauley *et al.* (2000) found evidence that squid exposed to seismic airguns show a behavioral response including inking. However, these were caged animals, and it is not clear how unconfined animals may have responded to the same signal and at the same distances used. In another study, Wilson *et al.* (2007) played back echolocation clicks of killer whales to two groups of squid (*Loligo pealeii*) in a tank. The investigators observed no apparent behavioral effects or any acoustic debilitation from playback of signals up to 199 to 226 dB re 1 μPa. It should be noted, however, that the lack of behavioral response by the squid may have been because the animals were in a tank rather than being in the wild. In another report on squid, Guerra *et al.* (2004) claimed that dead giant squid turned up around the time of seismic airgun operations off of Spain. The authors suggested, based on analysis of carcasses, that the damage to the squid was unusual when compared to other dead squid found at other times. However, the report presents conclusions based on a correlation to the time of finding of the carcasses and seismic testing, but the evidence in support of an effect of airgun activity was totally circumstantial. Moreover, the data presented showing damage to tissue is highly questionable since there was no way to differentiate between damage due to some external cause (*e.g.,* the seismic airgun) and normal tissue degradation that takes place after death, or due to poor fixation and preparation of tissue. To date, this work has not been published in peer reviewed literature, and detailed images of the reportedly damaged tissue are also not available.

In summary, baleen whales feed on aggregations of zooplankton, krill, and small schooling fish, while toothed whales feed on epipelagic, mesopelagic, and bathypelagic fish and squid. As summarized above and in the GoA TMAA DEIS in more detail, potential impacts to marine mammal food resources within the GoA TMAA are negligible given both lack of hearing sensitivity to mid-frequency sonar, the very geographic and spatially limited scope of most Navy at sea activities including underwater detonations, and the high biological productivity of these resources. No short- or long-term effects to marine mammal food resources from Navy activities are anticipated within the GoA TMAA.

Military Expendable Material

Marine mammals are subject to entanglement in expended materials, particularly anything incorporating loops or rings, hooks and lines, or sharp objects. Most documented cases of entanglements occur when whales encounter the vertical lines of fixed fishing gear. This section summarizes the potential effects of expended materials on marine mammals. Detailed discussion of military expendable material is contained within the GoA TMAA DEIS.

The Navy endeavors to recover expended training materials. Notwithstanding, it is not possible to recover all training materials, and some may be encountered by marine mammals in the waters of the GoA TMAA. Debris related to military activities that is not recovered generally sinks; the amount that might remain on or near the sea surface is low, and the density of such expendable materials in the GoA TMAA would be very low. Types of training materials that might be encountered include: Parachutes of various types (*e.g.,* those employed by personnel or on targets, flares, or sonobuoys); torpedo guidance wires, torpedo "flex hoses;" cable assemblies used to facilitate target recovery; sonobuoys; and EMATTs.

Entanglement in military expendable material was not cited as a source of injury or mortality for any marine mammals recorded in a large marine mammal and sea turtle stranding database for California waters, an area with much higher density of marine mammals and a much greater amount of Navy training. Therefore, as discussed in the GoA TMAA DEIS, expendable material is highly unlikely to directly affect marine mammal species or potential habitat within the GoA TMAA.

NMFS Office of Habitat Conservation is working with the Navy to better identify the potential risks of expended materials from the Navy activities as they relate to Essential Fish Habitat. These effects are indirectly related to marine mammal habitat, but based on the extent of the likely effects described in the Navy's DEIS, NMFS' Office of Protected Resources has preliminarily determined that they will not result in significant impacts to marine mammal habitat. The EFH discussions between Navy and NMFS' Office of Habitat Conservation will further inform the marine mammal habitat analysis in the final rule.

Water Quality

The GoA TMAA DEIS analyzed the potential effects to water quality from sonobuoy, Acoustic Device Countermeasures (ADCs), and Expendable Mobile Acoustic Training Target (EMATT) batteries; explosive packages associated with the explosive source sonobuoy (AN/SSQ–110A), and Otto Fuel (OF) II combustion byproducts associated with torpedoes. Expendable bathythermographs do not have batteries and were not included in the analysis. In addition, sonobuoys were not analyzed since, once scuttled, their electrodes are largely exhausted during use and residual constituent dissolution occurs more slowly than the releases from activated seawater batteries. As such, only the potential effects of batteries and explosions on marine water quality in and surrounding the sonobuoy training area were completed. The Navy determined that there would be no significant effect to water quality from seawater batteries, lithium batteries, and thermal batteries associated with scuttled sonobuoys.

ADCs and EMATTs use lithium sulfur dioxide batteries. The constituents in the battery react to form soluble hydrogen gas and lithium dithionite. The hydrogen gas eventually enters the atmosphere and the lithium hydroxide dissociates, forming lithium ions and hydroxide ions. The hydroxide is neutralized by the hydronium formed from hydrolysis of the acidic sulfur dioxide, ultimately forming water. Sulfur dioxide, a gas that is highly soluble in water, is the major reactive component in the battery. The sulfur ioxide ionizes in the water, forming bisulfite (HSO3) that is easily oxidized to sulfate in the slightly alkaline environment of the ocean. Sulfur is present as sulfate in large quantities (*i.e.,* 885 milligrams per liter (mg/L)) in the ocean. Thus, it was determined that there would be no significant effect to water quality from lithium sulfur batteries associated with scuttled ADCs and EMATTs.

Only a very small percentage of the available hydrogen fluoride explosive product in the explosive source sonobuoy (AN/SSQ–110A) is expected to become solubilized prior to reaching the surface and the rapid dilution would occur upon mixing with the ambient water. As such, it was determined that there would be no significant effect to water quality from the explosive product associated with the explosive source sonobuoy (AN/SSQ–110A).

OF II is combusted in the torpedo engine and the combustion byproducts are exhausted into the torpedo wake, which is extremely turbulent and causes rapid mixing and diffusion. Combustion byproducts include carbon dioxide, carbon monoxide, water, hydrogen gas,

nitrogen gas, ammonia, hydrogen cyanide, and nitrogen oxides. All of the byproducts, with the exception of hydrogen cyanide, are below the EPA water quality criteria. Hydrogen cyanide is highly soluble in seawater and dilutes below the EPA criterion within 6.3 m (20.7 ft) of the torpedo. Therefore, it was determined there would be no significant effect to water quality as a result of OF II.

Analysis and Negligible Impact Determination

Pursuant to NMFS' regulations implementing the MMPA, an applicant is required to estimate the number of animals that will be "taken" by the specified activities (*i.e.,* takes by harassment only, or takes by harassment, injury, and/or death). This estimate informs the analysis that NMFS must perform to determine whether the activity will have a "negligible impact" on the affected species or stock. Level B (behavioral) harassment occurs at the level of the individual(s) and does not assume any resulting population-level consequences, though there are known avenues through which behavioral disturbance of individuals can result in population-level effects (*e.g.,* pink-footed geese (*Anser brachyrhynchus*) in undisturbed habitat gained body mass and had about a 46-percent reproductive success compared with geese in disturbed habitat (being consistently scared off the fields on which they were foraging) which did not gain mass and has a 17-percent reproductive success). A negligible impact finding is based on the lack of likely adverse effects on annual rates of recruitment or survival (*i.e.,* population-level effects). An estimate of the number of Level B harassment takes, alone, is not enough information on which to base an impact determination. In addition to considering estimates of the number of marine mammals that might be "taken" through behavioral harassment, NMFS must consider other factors, such as the likely nature of any responses (their intensity, duration, etc.), the context of any responses (critical reproductive time or location, migration, etc.), as well as the number and nature of estimated Level A Harassment takes, the number of estimated mortalities, and effects on habitat. Generally speaking, and especially with other factors being equal, the Navy and NMFS anticipate more severe effects from takes resulting from exposure to higher received levels (though this is in no way a strictly linear relationship throughout species, individuals, or circumstances) and less severe effects from takes resulting from exposure to lower received levels.

The Navy's specified activities have been described based on best estimates of the number of MFAS/HFAS hours that the Navy will conduct. The exact number of hours (or torpedoes, or pings, whatever unit the source is estimated in) may vary from year to year, but will not exceed the 5-year total indicated in Table 8 (by multiplying the yearly estimate by 5) by more than 10 percent. NMFS estimates that a 10-percent increase in active sonar hours (torpedoes, pings, etc.) would result in approximately a 10-percent increase in the number of takes, and we have considered this possibility and the effect of the additional active sonar use in our analysis.

Taking the above into account, considering the sections discussed below, and dependent upon the implementation of the proposed mitigation measures, NMFS has preliminarily determined that Navy training exercises utilizing MFAS/HFAS and underwater detonations will have a negligible impact on the marine mammal species and stocks present in the GoA TMAA.

Behavioral Harassment

As discussed in the Potential Effects of Exposure of Marine Mammals to MFAS/HFAS and illustrated in the conceptual framework, marine mammals can respond to MFAS/HFAS in many different ways, a subset of which qualifies as harassment (see Behavioral Harassment Section). One thing that the take estimates do not take into account is the fact that most marine mammals will likely avoid strong sound sources to one extent or another. Although an animal that avoids the sound source will likely still be taken in some instances (such as if the avoidance results in a missed opportunity to feed, interruption of reproductive behaviors, etc.) in other cases avoidance may result in fewer instances of take than were estimated or in the takes resulting from exposure to a lower received level than was estimated, which could result in a less severe response. For MFAS/HFAS, the Navy provided information (Table 9) estimating the percentage of the total takes that will occur within the 10-dB bins (without considering mitigation or avoidance) that are within the received levels considered in the risk continuum and for TTS and PTS. This table applies specifically to AN/SQS–53 hull-mounted active sonar (the most powerful source); with less powerful sources, the percentages would increase slightly in the lower received levels and correspondingly decrease in the higher received levels. As mentioned above, an animal's exposure to a higher received level is more likely to result in a behavioral response that is more likely to adversely affect the health of the animal.

TABLE 9—APPROXIMATE PERCENT OF ESTIMATED TAKES THAT OCCUR IN THE INDICATED 10-dB BINS FOR AN/SQS–53 (THE MOST POWERFUL SOURCE)

Received level (SPL)	Distance at which levels occur in GOA TMAA	Percent of total harassment takes estimated to occur at indicated level
Below 138 dB	42 km–105 km	~0
138 < Level < 144 dB	28 km–42 km	< 1
144 < Level < 150 dB	17 km–28 km	~1
150 < Level < 156 dB	9 km–17 km	7
156 < Level < 162 dB	5 km–9 km	18
162 < Level < 168 dB	2.5 km–5 km	26
168 < Level < 174 dB	1.2 km–2.5 km	22
174 < Level < 180 dB	0.5 km–1.2 km	14
180 < Level < 186 dB	335 m–0.5 km	6
186 < Level < TTS	178 m–335 m	5
TTS (195 SEL)	10 m–178 m	< 1

TABLE 9—APPROXIMATE PERCENT OF ESTIMATED TAKES THAT OCCUR IN THE INDICATED 10-dB BINS FOR AN/SQS–53 (THE MOST POWERFUL SOURCE)—Continued

Received level (SPL)	Distance at which levels occur in GOA TMAA	Percent of total harassment takes estimated to occur at indicated level
PTS (215 SEL)	10 m	< .01

Note: For smaller sources, a higher % of the takes occur at lower levels, and a lower % at higher levels.

Because the Navy has only been monitoring specifically to discern the effects of MFAS/HFAS on marine mammals since approximately 2006, and because of the overall data gap regarding the effects of MFAS/HFAS on marine mammals, not a lot is known regarding how marine mammals in the GoA TMAA will respond to MFAS/HFAS. The Navy has submitted reports from more than 60 major exercises conducted in the Southern California Range Complex, the Hawaii Range Complex, and off the Atlantic Coast, that indicate no behavioral disturbance was observed. One cannot conclude from these results that marine mammals were not harassed from MFAS/HFAS, as a portion of animals within the area of concern were not seen (especially those more cryptic, deep-diving species, such as beaked whales or *Kogia* spp.) and some of the non-biologist watchstanders might not be well-qualified to characterize behaviors. However, one can say that the animals that were observed did not respond in any of the obviously more severe ways, such as panic, aggression, or anti-predator response.

In addition to the monitoring that will be required pursuant to these regulations and any corresponding LOAs, which is specifically designed to help us better understand how marine mammals respond to sound, the Navy and NMFS have developed, funded, and begun conducting a controlled exposure experiment with beaked whales in the Bahamas (results of first year discussed in previous sections; preliminary 2008 results are also available). Separately, the Navy and NMFS conducted an opportunistic tagging experiment with several species of marine mammals in the area of the 2008 RIMPAC training exercises in the Hawaii Range Complex (HRC), for which the results are still being analyzed.

Diel Cycle

As noted previously, many animals perform vital functions, such as feeding, resting, traveling, and socializing on a diel cycle (24-hr cycle). Behavioral reactions to noise exposure (when taking place in a biologically important context, such as disruption of critical life functions, displacement, or avoidance of important habitat) are more likely to be significant if they last more than one diel cycle or recur on subsequent days (Southall *et al.,* 2007). Consequently, a behavioral response lasting less than one day and not recurring on subsequent days is not considered severe unless it could directly affect reproduction or survival (Southall *et al.,* 2007).

In the previous section, we discussed the fact that potential behavioral responses to MFAS/HFAS that fall into the category of harassment could range in severity. By definition, takes by behavioral harassment involve the disturbance of a marine mammal or marine mammal stock in the wild by causing disruption of natural behavioral patterns (such as migration, surfacing, nursing, breeding, feeding, or sheltering) to a point where such behavioral patterns are abandoned or significantly altered. These reactions would, however, be more of a concern if they were expected to last over 24 hrs or be repeated in subsequent days. Additionally, vessels with hull-mounted active sonar are typically moving at speeds of 10–14 knots, which would make it unlikely that the same animal could remain in the immediate vicinity of the ship for the entire duration of the exercise. Animals are not expected to be exposed to MFAS/HFAS at levels or for a duration likely to result in a significant response that would then last for more than one day or on successive days. With the exception of SINKEXs, the planned explosive exercises are also of a short duration (1–6 hrs). Although explosive exercises may sometimes be conducted in the same general areas repeatedly, because of their short duration and the fact that they are in the open ocean and animals can easily move away, it is similarly unlikely that animals would be exposed for long, continuous amounts of time. Although SINKEXs may last for up to 48 hrs, only two are planned annually, they are stationary and conducted in deep, open water (where fewer marine mammals would typically be expected to be randomly encountered), and they have a rigorous monitoring and shutdown protocol, all of which make it unlikely that individuals would be exposed to the exercise for extended periods or on consecutive days.

TTS

NMFS and the Navy have estimated that approximately 1,000 individual marine mammals (totaled from all affected species) may sustain some level of TTS from MFAS/HFAS annually. As mentioned previously, TTS can last from a few minutes to days, be of varying degree, and occur across various frequency bandwidths, all of which determine the severity of the impacts on the affected individual, which can range from minor to more severe. Table 9 indicates the estimated number of animals that might sustain TTS from exposure to MFAS/HFAS. The TTS sustained by an animal is primarily classified by three characteristics:

(1) *Frequency*—Available data (of mid-frequency hearing specialists exposed to mid- or high-frequency sounds; Southall *et al.,* 2007) suggest that most TTS occurs in the frequency range of the source up to one octave higher than the source (with the maximum TTS at ½ octave above). The more MF powerful sources used (the two hull-mounted MFAS sources and the DICASS sonobuoys) have center frequencies between 3.5 and 8 kHz and the other unidentified MF sources are, by definition, less than 10 kHz, which suggests that TTS induced by any of these MF sources would be in a frequency band somewhere between approximately 2 and 20 kHz. There are fewer hours of HF source use and the sounds would attenuate more quickly, plus they have lower source levels, but if an animal were to incur TTS from these sources, it would cover a higher frequency range (sources are between 20 and 100 kHz, which means that TTS could range up to 200 kHz; however, HF

systems are typically used less frequently and for shorter time periods than surface ship and aircraft MF systems, so TTS from these sources is even less likely). TTS from explosives would be broadband. Tables 5a and 5b summarize the vocalization data available for each species.

(2) *Degree of the shift (i.e., how many dB is the sensitivity of the hearing reduced by)*—Generally, both the degree of TTS and the duration of TTS will be greater if the marine mammal is exposed to a higher level of energy (which would occur when the peak dB level is higher or the duration is longer). The threshold for the onset of TTS (> 6 dB) is 195 dB (SEL), which might be received at distances of up to 459 ft (140 m) from the most powerful MFAS source, the AN/SQS–53 (the maximum ranges to TTS from other sources would be less, as modeled for the GoA TMAA). An animal would have to approach closer to the source or remain in the vicinity of the sound source appreciably longer to increase the received SEL, which would be difficult considering the watchstanders and the nominal speed of an active sonar vessel (10–12 knots). In the TTS studies, some using exposures of almost an hour in duration or up to 217 SEL, most of the TTS induced was 15 dB or less, though Finneran *et al.* (2007) induced 43 dB of TTS with a 64-sec exposure to a 20 kHz source (MFAS emits a 1-s ping 2 times/minute).

(3) *Duration of TTS (recovery time)*—In the TTS laboratory studies, some using exposures of almost an hour in duration or up to 217 SEL, almost all individuals recovered within 1 day (or less, often in minutes), though in one study (Finneran *et al.,* 2007), recovery took 4 days.

Based on the range of degree and duration of TTS reportedly induced by exposures to non-pulse sounds of energy higher than that to which free-swimming marine mammals in the field are likely to be exposed during MFAS/HFAS training exercises in the GoA TMAA, it is unlikely that marine mammals would ever sustain a TTS from MFAS that alters their sensitivity by more than 20 dB for more than a few days (and the majority would be far less severe because of short duration of the majority of the exercises and the speed of a typical vessel), if that. Also, for the same reasons discussed in the Diel Cycle section, and because of the short distance within which animals would need to approach the sound source, it is unlikely that animals would be exposed to the levels necessary to induce TTS in subsequent time periods such that their recovery is impeded. Additionally, though the frequency range of TTS that marine mammals might sustain would overlap with some of the frequency ranges of their vocalization types, the frequency range of TTS from MFAS (the source from which TTS would most likely be sustained because the higher source level and slower attenuation make it more likely that an animal would be exposed to a higher level) would not usually span the entire frequency range of one vocalization type, much less span all types of vocalizations (see Tables 5a and 5b). If impaired, marine mammals would typically be aware of their impairment and implement behaviors to compensate (see Communication Impairment Section), though these compensations may incur energetic costs.

Acoustic Masking or Communication Impairment

Table 5a and Table 5b are also informative regarding the nature of the masking or communication impairment that could potentially occur from MFAS (again, center frequencies are 3.5 and 7.5 kHz for the two types of hull-mounted active sonar). However, masking only occurs during the time of the signal (and potential secondary arrivals of indirect rays), versus TTS, which continues beyond the duration of the signal. Standard MFAS pings last on average one second and occur about once every 24–30 seconds for hull-mounted sources. For the sources for which we know the pulse length, most are significantly shorter than hull-mounted active sonar, on the order of several microseconds to tens of microseconds. For hull-mounted active sonar, though some of the vocalizations that marine mammals make are less than one second long, there is only a 1 in 24 chance that they would occur exactly when the ping was received, and when vocalizations are longer than one second, only parts of them are masked. Alternately, when the pulses are only several microseconds long, the majority of most animals' vocalizations would not be masked. Masking effects from MFAS/HFAS are expected to be minimal. If masking or communication impairment were to occur briefly, it would be in the frequency range of MFAS, which overlaps with some marine mammal vocalizations; however, it would likely not mask the entirety of any particular vocalization or communication series because the signal length, frequency, and duty cycle of the MFAS/HFAS signal does not perfectly mimic the characteristics of any marine mammal's vocalizations.

PTS, Injury, or Mortality

The Navy's model estimated that one Dall's porpoise would be exposed to levels of MFAS/HFAS that would result in PTS. This estimate does not take into consideration either the mitigation measures, the likely avoidance behaviors of some of the animals exposed, the distance from the sonar dome of a surface vessel within which an animal would have to be exposed to incur PTS (10 m), or the nominal speed of a surface vessel engaged in ASW exercises. NMFS believes that many marine mammals would deliberately avoid exposing themselves to the received levels of active sonar necessary to induce injury by moving away from or at least modifying their path to avoid a close approach. Additionally, in the unlikely event that an animal approaches the sonar vessel at a close distance, NMFS believes that the mitigation measures (*i.e.,* shutdown/powerdown zones for MFAS/HFAS) would typically ensure that animals would be not be exposed to injurious levels of sound. As discussed previously, the Navy utilizes both aerial (when available) and passive acoustic monitoring (during all ASW exercises) in addition to watchstanders on vessels to detect marine mammals for mitigation implementation and indicated that they are capable of effectively monitoring a 1000-m (1093-yd) safety zone at night using night vision goggles, infrared cameras, and passive acoustic monitoring.

If a marine mammal is able to approach a surface vessel within the distance necessary to incur PTS, the likely speed of the vessel (nominal 10–12 knots) would make it very difficult for the animal to remain in range long enough to accumulate enough energy to result in more than a mild case of PTS. As mentioned previously and in relation to TTS, the likely consequences to the health of an individual that incurs PTS can range from mild to more serious dependent upon the degree of PTS and the frequency band it is in, and many animals are able to compensate for the shift, although it may include energetic costs. While the Navy's modeling predicts that one Dall's porpoise will incur PTS from exposure to MFAS/HFAS, the Navy and NMFS believe it is very unlikely to occur; therefore, the Navy has not requested authorization to take one by Level A Harasssment and NMFS is not proposing to authorize take of Dall's porpoise by Level A harassment.

As discussed previously, marine mammals (especially beaked whales) could potentially respond to MFAS at a

received level lower than the injury threshold in a manner that indirectly results in the animals stranding. The exact mechanisms of this potential response, behavioral or physiological, are not known. When naval exercises have been associated with strandings in the past, it has typically been when three or more vessels are operating simultaneously, in the presence of a strong surface duct, and in areas of constricted channels, semi-enclosed areas, and/or steep bathymetry. While these features certainly do not define the only factors that can contribute to a stranding, and while they need not all be present in their aggregate to increase the likelihood of a stranding, it is worth noting that they are not all present in the GoA TMAA, which only has a strong surface duct present during the winter, and does not have bathymetry or constricted channels of the type that have been present in the sonar-associated strandings. Additionally, based on the number of occurrences where strandings have been definitively associated with military active sonar versus the number of hours of active sonar training that have been conducted, we suggest that the probability is small that this will occur. Lastly, an active sonar shutdown protocol for strandings involving live animals milling in the water minimizes the chances that these types of events turn into mortalities. Though NMFS does not expect it to occur, because of the uncertainty surrounding the mechanisms that link exposure to MFAS to stranding (especially in beaked whales), NMFS proposes to authorize the injury or mortality of up to 15 beaked whales over the course of the 5-yr regulations.

Species-Specific Analysis

In the discussions below, the "acoustic analysis" refers to the Navy's analysis, which includes the use of several models and other applicable calculations as described in the Estimates of Potential Marine Mammal Exposure section. The numbers predicted by the "acoustic analysis" are based on a uniform and stationary distribution of marine mammals and do not take into consideration the implementation of mitigation measures or potential avoidance behaviors of marine mammals, and therefore, are likely overestimates of potential exposures to the indicated thresholds (PTS, TTS, behavioral harassments).

Blue Whale (MMPA Depleted/ESA-Listed)

Acoustic analysis predicts that one exposure of a blue whale to MFAS/HFAS at levels likely to result in Level B harassment will occur, and that one exposure to explosives will occur. This estimate represents the total number of takes and not necessarily the number of individuals taken, as a single individual may be taken multiple times over the course of a year. These Level B takes are anticipated to be primarily in the form of behavioral disturbance as described in the Definition of Harassment: Level B Harassment section; zero TTS takes are estimated. It is unlikely that any blue whales will incur TTS because of the following: The distance within which they would have to approach the MFAS source (approximately 140 m for the most powerful source for TTS); the fact that many animals will likely avoid active sonar sources to some degree; and the likelihood that Navy monitors would detect these animals prior to an approach within this distance (given their large size, average group size of two or three, and pronounced vertical blow) and implement active sonar powerdown or shutdown. Of note, blue whale vocalizations are in the 12 to 400 Hz range with dominant energy in the 12 to 25 Hz range, which suggests that blue whale hearing may be more sensitive in this frequency range. Thus, frequencies in the MFAS range (1–10 kHz) are predicted to lie closer to the periphery of their hearing, which suggests that adverse impacts resulting from exposure to MFAS may be fewer than modeled.

Blue whales have been seen in the GoA and the Eastern North Pacific population is estimated at a minimum of 1,368 whales. Like most baleen whales, blue whales would most likely feed in the north during summer months (potentially the GoA) and head southward in the cooler months. Relative to the population size, this activity is anticipated to result only in a limited number of Level B harassment takes. The GoA TMAA activities are not expected to occur in an area/time of specific importance for breeding, calving, or other known critical behaviors. The blue whales' large size and detectability makes it unlikely that these animals would be exposed to the higher levels of sound expected to result in more severe effects. Consequently, the activities are not expected to adversely impact rates of recruitment or survival of blue whales. Based on the general information contained in the Negligible Impact Analysis section and this species-specific summary of the effects of the takes, NMFS has preliminarily determined that the Navy's specified activities will have a negligible impact on this species.

Fin Whale (MMPA Depleted/ESA-Listed)

Acoustic analysis predicts that 11,019 exposures of fin whales to MFAS/HFAS at sound levels likely to result in Level B harassment will occur, and that 18 exposures to explosives will occur. This estimate represents the total number of takes and not necessarily the number of individuals taken, as a single individual may be taken multiple times over the course of a year. These Level B takes are anticipated to be primarily in the form of behavioral disturbance as described in the Definition of Harassment: Level B Harassment section, although 26 TTS takes are also estimated. However, it is unlikely that any fin whales will incur TTS because of: The distance within which they would have to approach the MFAS source (approximately 140 m for the most powerful source for TTS), the fact that many animals will likely avoid active sonar sources to some degree, and the likelihood that Navy monitors would detect these animals prior to an approach within this distance (given their large size, average group size (3), and pronounced vertical blow) and implement active sonar powerdown or shutdown. Of note, fin whale vocalizations are in the 15–750 Hz range with the majority below 70 Hz, which suggests that fin whale hearing may be more sensitive in this frequency range. Thus, frequencies in the MFAS range (1–10 kHz) are predicted to lie closer to the periphery of their hearing, which suggests that adverse impacts resulting from exposure to MFAS may be fewer than modeled.

Although reliable estimates of current abundance for the entire Northeast Pacific fin whale stock are not currently available, fin whales have been seen in the GoA and the provisional estimate for this stock is 3,368 whales for the central-eastern Bering Sea and 683 for the eastern Bering Sea. These estimates are considered provisional because they have not been corrected for animals missed on the trackline, animals submerged when the survey ship passed, and responsive movements. For purposes of acoustic impact modeling, a density of 0.010 individuals per km^2 was used based on 24 visual observations of fin whale groups totaling 64 individuals during a 10-day period (Rone *et al.,* 2009). Although acoustic impact modeling predicted a large number of takes relative to population size, NMFS believes that this is a conservative estimate due to the high number of fin whales sighted during the most recent survey in 2009. In addition, the majority of fin whale takes by Level B harassment would

result in behavioral harassment (99.8 percent), which NMFS, for reasons discussed in the Behavioral Harassment section above, expects will have a negligible impact on the species. For instance, previous monitoring reports submitted by the Navy from more than 60 major exercises have indicated no observed behavioral disturbance Although one cannot conclude from these results that marine mammals were not harassed and some of the non-biologist watchstanders might not be well qualified to characterize behavior, one can say that the animals observed did not respond in any of the obviously more severe ways, such as panic, aggression, or anti-predator response that would be more likely to adversely affect annual rates of recruitment or survival. Additional reasons in support of NMFS' preliminary negligible impact determination follow. In the North Pacific, fin whales migrate seasonally from high Arctic feeding areas in the summer to low latitude breeding and calving areas in the winter. The GoA TMAA activities are not expected to occur in an area/time of specific importance for breeding, calving, or other known critical behaviors. The fin whales' large size and detectability makes it unlikely that these animals would be exposed to the higher levels of sound expected to result in more severe effects. Consequently, the activities are not expected to adversely impact rates of recruitment or survival of fin whales. Based on the general information contained in the Negligible Impact Analysis section and this species-specific summary of the effects of the takes, NMFS has preliminarily determined that the Navy's specified activities will have a negligible impact on this species.

Sei Whale (MMPA Depleted/ESA-Listed)

Acoustic analysis predicts that 4 exposures of sei whales to MFAS/HFAS at sound levels likely to result in Level B harassment will occur, and that 4 exposures to explosives will occur. This estimate represents the total number of takes and not necessarily the number of individuals taken, as a single individual may be taken multiple times over the course of a year. These Level B takes are anticipated to be primarily in the form of behavioral disturbance as described in the Definition of Harassment: Level B Harassment section; no TTS takes are estimated. It is unlikely that any sei whales will incur TTS because of: The distance within which they would have to approach the MFAS source (approximately 140 m for the most powerful source for TTS), the fact that many animals will likely avoid active sonar sources to some degree, and the likelihood that Navy monitors would detect these animals prior to an approach within this distance (given their large size, average group size (three), and pronounced vertical blow) and implement active sonar powerdown or shutdown.

The most appropriate population estimate for the sei whale is the one for the North Pacific, which estimates 9,110 whales. Relative to the population size, this activity is anticipated to result only in a limited number of Level B harassment takes. Sei whales are generally thought to feed in the summer in the north and spend winters in warm temperate or sub-tropical areas. The GoA TMAA activities are not expected to occur in an area/time of specific importance for breeding, calving, or other known critical behaviors. The sei whales' large size and detectability makes it unlikely that these animals would be exposed to the higher levels of sound expected to result in more severe effects. Consequently, the activities are not expected to adversely impact rates of recruitment or survival of sei whales. Based on the general information contained in the Negligible Impact Analysis section and this species-specific summary of the effects of the takes, NMFS has preliminarily determined that the Navy's specified activities will have a negligible impact on this species.

Humpback Whale (MMPA Depleted/ESA-Listed)

Acoustic analysis predicts that 1,394 exposures of humpback whales to MFAS/HFAS at sound levels likely to result in Level B harassment will occur. This estimate represents the total number of takes and not necessarily the number of individuals taken, as a single individual may be taken multiple times over the course of a year. These Level B takes are anticipated to be primarily in the form of behavioral disturbance as described in the Definition of Harassment: Level B Harassment section, although six TTS takes are also estimated. However, it is unlikely that any humpback whales will incur TTS because of the following: The distance within which they would have to approach the MFAS source (approximately 459 ft (140 m) for the most powerful source for TTS); the fact that many animals will likely avoid active sonar sources to some degree; and the likelihood that Navy monitors would detect these animals prior to an approach within this distance (given their large size and gregarious nature) and implement active sonar powerdown or shutdown.

The acoustic analysis further predicts that one humpback whale would be exposed to levels of pressure and/or energy from explosive detonations that would result in Level B harassment. NMFS believes that this is unlikely because of: (1) The distance within which they would have to approach the explosive source; and (2) the likelihood that Navy monitors would, before or during exercise monitoring, detect these large, gregarious animals prior to an approach within this distance and require a delay of the exercise.

The current estimate for the North Pacific is 18,302 humpback whales (Calambokidis *et al.,* 2008). Relative to the population size, this activity is anticipated to result only in a limited number of Level B harassment takes. Humpback whales are generally thought to feed in the summer in the north and spend winters in warm temperate or sub-tropical areas. The GoA TMAA activities are not expected to occur in an area/time of specific importance for breeding, calving, or other known critical behaviors. The humpback whales' large size and detectability makes it unlikely that these animals would be exposed to the higher levels of sound expected to result in more severe effects. Consequently, the activities are not expected to adversely impact rates of recruitment or survival of humpback whales. Based on the general information contained in the Negligible Impact Analysis section and this species-specific summary of the effects of the takes, NMFS has preliminarily determined that the Navy's specified activities will have a negligible impact on this species.

North Pacific Right Whale (MMPA Depleted/ESA-Listed)

Acoustic analysis predicts that one exposure of a North Pacific right whale to MFAS/HFAS at sound levels likely to result in Level B harassment will occur, and that one exposure to explosives will occur. These Level B takes are anticipated to be in the form of behavioral disturbance as described in the Definition of Harassment: Level B Harassment section; no TTS takes are estimated. It is unlikely that any North Pacific right whales will incur TTS because of: The distance within which they would have to approach the MFAS source (approximately 459 ft (140 m) for the most powerful source for TTS), the fact that many animals will likely avoid active sonar sources to some degree, and the likelihood that Navy monitors would detect these animals prior to an approach within this distance (given

their large size, callosities on the head, and pronounced v-shaped blow) and implement active sonar powerdown or shutdown.

North Pacific right whales are found in subpolar to temperate waters. There are no reliable estimates of current abundance or trends for right whales in the North Pacific and the population may only number in the low hundreds (Angliss and Allen, 2008). The population in the eastern North Pacific is considered to be very small, perhaps only in the tens of animals. Over the past 40 years, most sightings in the eastern North Pacific have been of single animals; however, during the last few years, small groups of right whales have been reported (such as the group of 17 documented in the Bering Sea in 2004; Angliss and Allen, 2008). There is evidence that the GoA was historically used as a feeding ground, and recent surveys suggest that some individuals continue to use the shelf east of Kodiak Island as a feeding area, which has now been designated under the ESA as critical habitat (73 FR 19000, April 8, 2008). The North Pacific right whales' large size and detectability makes it unlikely that these animals would be exposed to the higher levels of sound expected to result in more severe effects. Consequently, the activities are not expected to adversely impact rates of recruitment or survival of North Pacific right whales. Based on the general information contained in the Negligible Impact Analysis section and this species-specific summary of the effects of the takes, NMFS has preliminarily determined that the Navy's specified activities will have a negligible impact on this species.

Minke Whale

Acoustic analysis predicts that 679 exposures of minke whales to MFAS/HFAS at sound levels likely to result in Level B harassment will occur, and that two exposures to explosives will occur. This estimate represents the total number of takes and not necessarily the number of individuals taken, as a single individual may be taken multiple times over the course of a year. These Level B takes are anticipated to be primarily in the form of behavioral disturbance as described in the Definition of Harassment: Level B Harassment section, although two TTS takes are also estimated. It is somewhat unlikely that any minke whales will incur TTS because of: The distance within which they would have to approach the MFAS source (approximately 459 ft (140 m) for the most powerful source for TTS) and the fact that many animals will likely avoid active sonar sources to some degree. However, minke whales are relatively cryptic at surface, making visual detection more difficult, although they are often detected acoustically.

Minke whales are distributed in polar, temperate, and tropical waters, but are less common in the tropics than in cooler waters. Within the Pacific EEZ, NMFS recognizes three stocks of minke whales: A California/Oregon/Washington stock; an Alaskan stock; and a Hawaiian stock. Currently, there are no estimates of abundance for minke whales in Alaskan waters (Angliss and Allen, 2008). In general, sightings of minke whales in the GoA are low. Although large numbers of minke whales were reported at Portlock Bank (in the TMAA) and Albatross bank (west of the TMAA) in May 1976 (Fiscus *et al.,* 1976), subsequent NMFS surveys reported no minke whales in those locations. During the April 2009 survey, two encounters totaling three individual minke whales occurred on the shelf and only one of these encounters was within the TMAA. The GoA TMAA activities are not expected to occur in an area/time of specific importance for breeding, calving, or other known critical behaviors. Consequently, the activities are not expected to adversely impact rates of recruitment or survival of minke whales. Based on the general information contained in the Negligible Impact Analysis section and this species-specific summary of the effects of the takes, NMFS has preliminarily determined that the Navy's specified activities will have a negligible impact on this species.

Sperm Whale (MMPA Depleted/ESA-Listed)

Acoustic analysis predicts that 328 exposures of sperm whales to MFAS/HFAS at sound levels likely to result in Level B harassment will occur. This estimate represents the total number of takes and not necessarily the number of individuals taken, as a single individual may be taken multiple times over the course of a year. These Level B takes are anticipated to be primarily in the form of behavioral disturbance as described in the Definition of Harassment: Level B Harassment section; one TTS take is estimated and proposed for authorization. However, it is unlikely that any sperm whales will incur TTS because of: The distance within which they would have to approach the MFAS source (approximately 459 ft (140 m) for the most powerful source for TTS), the fact that many animals will likely avoid active sonar sources to some degree, and the likelihood that Navy monitors would detect these animals prior to an approach within this distance (given their large size, pronounced blow, and mean group size of seven).

The acoustic analysis further predicts that one sperm whale would be exposed to levels of pressure and/or energy from explosive detonations that would result in Level B harassment. NMFS believes that this is unlikely because of: The distance within which they would have to approach the explosive source; and the likelihood that Navy monitors would, before or during exercise monitoring, detect these animals for the reasons indicated above.

Sperm whales occur throughout all ocean basins from equatorial to polar waters. Sperm whales are found throughout the North Pacific, and are broadly distributed from tropical and temperate waters to the Bering Sea as far north as Cape Navarin. Currently, estimates of sperm whale abundance in the North Pacific are not available. For the North Pacific, sperm whales have been divided into three separate stocks based on where they are found, which have been designated as (1) Alaska (North Pacific stock), (2) California/Oregon/Washington, and (3) Hawaii (Angliss and Allen, 2008). The estimated population for the North Pacific stock is 102,112 (CV = 0.15) (Angliss and Allen, 2008). In the GoA, sperm whales primarily occur seaward of the 1,640 ft (500 m) isobath (DoN, 2006). A survey in the Shelikof Strait (north of Kodiak), Cook Inlet, Prince William Sound and between Kodiak and Montique Island from June 26 to July 15, 2003 detected six sperm whales along the shelf break, with an average group size of 1.2 (Waite 2003). The April 2009 survey in the TMAA recorded sperm whales acoustically in both the inshore and offshore strata, but no sperm whales were detected visually (Rone *et al.,* 2009). The sperm whales' large size and detectability makes it unlikely that these animals would be exposed to the higher levels of sound expected to result in more severe effects. Consequently, the activities are not expected to adversely impact rates of recruitment or survival of sperm whales. Based on the general information contained in the Negligible Impact Analysis section and this species-specific summary of the effects of the takes, NMFS has preliminarily determined that the Navy's specified activities will have a negligible impact on this species.

Gray Whale

Acoustic analysis predicts that 385 exposures of gray whales to MFAS/HFAS at sound levels likely to result in Level B harassment will occur. This estimate represents the total number of takes and not necessarily the number of

individuals taken, as a single individual may be taken multiple times over the course of a year. These Level B takes are anticipated to be primarily in the form of behavioral disturbance as described in the Definition of Harassment: Level B Harassment section; one TTS take is estimated. NMFS believes that it is unlikely that a gray whale will incur TTS because of the distance within which they would have to approach the MFAS source (approximately 459 ft (140 m) for the most powerful source for TTS) and the fact that many animals will likely avoid active sonar sources to some degree. The gray whales' size and detectability makes it unlikely that these animals would be exposed to the higher levels of sound expected to result in more severe effects. Consequently, the activities are not expected to adversely impact rates of recruitment or survival of gray whales.

The acoustic analysis further predicts that three gray whales would be exposed to levels of pressure and/or energy from explosive detonations that would result in Level B harassment. These Level B takes are anticipated to be primarily in the form of behavioral disturbance as described in the Definition of Harassment: Level B Harassment section.

Gray whales occur only in the North Pacific. The Eastern North Pacific (ENP) population is found from the upper Gulf of California, south to the tip of Baja California, and up the Pacific coast of North America to the Chukchi and Beaufort seas. This stock is known to summer in the shallow waters of the northern Bering Sea, Chukchi Sea, and western Beaufort Sea, but some individuals spend the summer feeding along the Pacific coast from southeastern Alaska to central California. The minimum population estimates for the ENP stock of gray whales using the mean of the 2000/01 and 2001/02 abundance estimates is 17,752 and the best estimate of 18,813 whales (CV = 0.07; Angliss and Allen, 2008). The April 2009 survey encountered one group of two gray whales within the western edge of the TMAA and two groups well outside the TMAA, nearshore at Kodiak Island (Rone *et al.,* 2009). The GoA TMAA activities are not expected to occur in an area/time of specific importance for breeding, calving, or other known critical behaviors. Consequently, the activities are not expected to adversely impact rates of recruitment or survival of gray whales. Based on the general information contained in the Negligible Impact Analysis section and this species-specific summary of the effects of the takes, NMFS has preliminarily determined that the Navy's specified activities will have a negligible impact on this species.

Beaked Whales

Acoustic analysis predicts that 486 Baird's beaked whales, 2,308 Cuvier's beaked whales, and 2,308 Stejneger's beaked whales will be exposed to MFAS/HFAS at sound levels likely to result in Level B harassment. This estimate represents the total number of takes and not necessarily the number of individuals taken, as a single individual may be taken multiple times over the course of a year. These Level B takes are anticipated to be primarily in the form of behavioral disturbance as described in the Definition of Harassment: Level B Harassment section; one, six, and six (respectively, by species) TTS takes are estimated. NMFS believes that it is unlikely that this number of beaked whales will incur TTS because of the distance within which they would have to approach the MFAS source (approximately 459 ft (140 m) for the most powerful source for TTS) and the fact that many animals will likely avoid active sonar sources to some degree. However, the likelihood that Navy monitors would detect most of these animals at the surface prior to an approach within this distance is low because of their deep-diving behavior and cryptic profile. As mentioned above and indicated in Table 5a and Table 5b, some beaked whale vocalizations might overlap with the MFAS/HFAS TTS frequency range (2 to 20 kHz), which could potentially temporarily decrease an animal's sensitivity to the calls of conspecifics or returning echolocation signals. However, as noted previously, NMFS does not anticipate TTS of a long duration or severe degree to occur as a result of exposure to MFAS/HFAS.

The acoustic analysis further predicts that one Cuvier's beaked whale and one Stejneger's beaked whale would be exposed to levels of pressure and/or energy from explosive detonations that would result in Level B harassment by TTS, and one Baird's beaked whale, three Cuvier's beaked whales, and four Stejneger's beaked whales could be exposed to levels associated with behavioral disturbance. It is important to note that, due to the lack of available density information for Stejneger's beaked whale, the density and results from modeling of Cuvier's beaked whales were used as a surrogate.

Baird's beaked whales appear to occur mainly in cold deep water (3,300 ft (1,000 m) or greater) over the continental slope, oceanic seamounts, and in areas with submarine escarpments. They may also occasionally occur near shore along narrow continental shelves. The range for the Alaska stock of Baird's beaked whale extends from Cape Navarin (63 °N lat.) and the central Sea of Okhotsk (57 °N lat.) to St. Matthew Island, the Pribilof Islands in the Bering Sea, and the northern GoA (Angliss and Allen, 2008; DoN, 2006). Waite (2003) reported a group of four Baird's beaked whales at the shelf break to the east of the TMAA. There were no beaked whales detected acoustically or visually (although two groups of unidentified small whale were sighted) during the 2009 survey of the TMAA (Rone *et al.,* 2009).

Cuvier's beaked whales are considered to be the most widely distributed of the beaked whales. They occur in all three major oceans and most seas. In the North Pacific, they range north to the northern GoA, the Aleutian Islands, and the Commander Islands and as far south as Hawaii. In general, Cuvier's beaked whales are sighted in waters with a bottom depth greater than 656 ft (200 m) and are frequently recorded in areas with depths of 3,281 ft (1,000 m) or deeper. Occurrence has been linked to physical features such as the continental slope, canyons, escarpments, and oceanic islands (Angliss and Outlaw, 2005). Waite (2003) reported one sighting of a group of four Cuvier's beaked whales at the shelf break within the TMAA. Other reports of Cuvier's beaked whales in the GoA were in very deep water. Rice and Wolman (1982) observed a group of six Cuvier's beaked whales in about 14,715 ft (5,400 m) of water southeast of Kodiak Island. Surveys in the Aleutian Islands observed a group of six Cuvier's beaked whales in waters with a bottom depth of 13,123 to 16,404 ft (4,000 to 5,000 m) (Forney and Brown, 1996).

Stejneger's beaked whales (also called Bering Sea beaked whales) are found only in the North Pacific and appear to prefer cold-temperate and subpolar waters. The Alaska stock is recognized as separate from the population off California (Angliss and Outlaw, 2007). Off Alaska, this species has been observed in waters ranging from a bottom depth ranging from 2,395 to 5,118 ft (730 to 1,560 m) on the steep slope of the continental shelf as it drops off into the Aleutian Basin (which exceeds 11,482 ft (3,500 m) in bottom depth) (DoN, 2006). Although the April 2009 survey in the TMAA detected no beaked whales, surveys in the central Aleutian Islands sighted groups of three to 15 Stejneger's beaked whales (Rice, 1986).

No abundance estimates are available for any of these three species of beaked whale. There is only a limited amount

of information pertaining to the life history of beaked whales. Scientists have gathered some information from stranded animals, but little is known about how these animals express their life histories in the wild. Moreover, most sightings of beaked whales are brief because these whales are often difficult to approach and they actively avoid aircraft and vessels (*e.g.,* Wursig *et al.,* 1998). For the Stejneger's beaked whale, for example, there is no available information on reproduction and breeding. As discussed above, correlations have been made between bathymetric features and beaked whale sightings, which may indicate a habitat preference. The GoA TMAA activities are not expected to occur in an area/time of specific importance for reproduction, feeding, or other known critical behaviors. Consequently, the activities are not expected to adversely impact rates of recruitment or survival of beaked whales. Based on the general information contained in the Negligible Impact Analysis section and this species-specific summary of the effects of the takes, NMFS has preliminarily determined that the Navy's specified activities will have a negligible impact on this species.

Killer Whale (AT1 Transient Stock MMPA Depleted)

Acoustic analysis predicts that 10,643 killer whales will be exposed to MFAS/HFAS at sound levels likely to result in Level B harassment. This estimate represents the total number of takes and not necessarily the number of individuals taken, as a single individual may be taken multiple times over the course of a year. These Level B takes are anticipated to be primarily in the form of behavioral disturbance as described in the Definition of Harassment: Level B Harassment section; 41 TTS takes are estimated. NMFS, for reasons discussed in the Behavioral Harassment section above, expects that these takes will have a negligible impact on the species. For instance, previous monitoring reports submitted by the Navy from more than 60 major exercises have indicated no observed behavioral disturbance. Although one cannot conclude from these results that marine mammals were not harassed and some of the non-biologist watchstanders might not be well qualified to characterize behavior, one can say that the animals observed did not respond in any of the obviously more severe ways, such as panic, aggression, or anti-predator response that would be more likely to adversely affect annual rates of recruitment or survival. With respect to the TTS takes, it is unlikely that many individuals of these species will incur TTS because of: The distance within which they would have to approach the MFAS source (approximately 459 ft (140 m) for the most powerful source for TTS), the fact that many animals will likely avoid active sonar sources to some degree, and the likelihood that Navy monitors would detect these animals prior to an approach within this distance (given their gregarious nature and large group size) and implement active sonar powerdown or shutdown. As mentioned above and indicated in Table 5a and Table 5b, vocalizations of these species might overlap with the MFAS/HFAS TTS frequency range (2 to 20 kHz), which could potentially temporarily decrease an animal's sensitivity to the calls of conspecifics or returning echolocation signals. However, as noted previously, NMFS does not anticipate TTS of a long duration or severe degree to occur as a result of exposure to MFAS/HFAS.

The acoustic analysis further predicts that two killer whales would be exposed to levels of pressure and/or energy from explosive detonations that would result in Level B harassment by TTS, and four could be exposed to levels associated with behavioral disturbance. NMFS believes that this is unlikely because of: (1) The distance within which they would have to approach the explosive source; and, (2) the likelihood that Navy monitors would, during pre- or during exercises monitoring, detect these large-grouped gregarious animals prior to an approach within this distance and require a delay of the exercise.

Killer whales have the most ubiquitous distribution of any marine mammal species, observed in virtually every marine habitat from the tropics to the poles and from shallow, inshore water (and even rivers) to deep, oceanic regions. In the eastern north Pacific, including Alaskan waters, killer whales are found in protected inshore waters, as well as offshore waters (DoN, 2006). Killer whales are segregated socially, genetically, and ecologically into three distinct eco-type groups: Residents, transients, and offshore animals; all three eco-types are represented in the GoA. The ENP Alaskan Resident stock ranges from southeastern Alaska to the Aleutian Islands and Bering Sea. The ENP Northern Resident stock occurs from British Columbia through part of southeastern Alaska. There are about 656 and 216 photo-identified individuals in the ENP Alaska Resident and ENP Northern Resident stocks, respectively (Angliss and Allen, 2008).

The minimum population estimate for the GoA, Aleutian Islands, and Bering Sea Transient stock is 314 individuals based on photo-identification work. There is a minimum population estimate of 320 individuals in the West Coast Transient stock, which includes about 225 in Washington State and British Columbia, and southeastern Alaska, and 105 off California. The population estimate for the ENP stock of Transient whales is 346. The minimum population estimate for the AT1 Transient stock is seven individuals based on photographs from recent years (Angliss and Allen, 2008).

The minimum population estimate for the ENP Offshore stock of killer whales is 1,214 individuals (Carretta *et al.,* 2007). The total number of known offshore killer whales is 211 individuals, but the amount of time this transboundary stock spends in U.S. waters is unknown (Carretta *et al.,* 2006).

The GoA TMAA activities are not expected to occur in an area/time of specific importance for reproduction, feeding, or other known critical behaviors. Consequently, the activities are not expected to adversely impact rates of recruitment or survival of these three eco-types of killer whales. Based on the general information contained in the Negligible Impact Analysis section and this species-specific summary of the effects of the takes, NMFS has preliminarily determined that the Navy's specified activities will have a negligible impact on this species.

Pacific White-Sided Dolphins

Acoustic analysis predicts that 16,973 Pacific white-sided dolphins will be exposed to MFAS/HFAS at sound levels likely to result in Level B harassment. These estimates represent the total number of takes and not necessarily the number of individuals taken, as a single individual may be taken multiple times over the course of a year. These Level B takes are anticipated to be primarily in the form of behavioral disturbance as described in the Definition of Harassment: Level B Harassment section; 61 TTS takes are estimated. However, it is unlikely that many individuals of these species will incur TTS because of: The distance within which they would have to approach the MFAS source (approximately 459 ft (140 m) for the most powerful source for TTS), the fact that many animals will likely avoid active sonar sources to some degree, and the likelihood that Navy monitors would detect these animals prior to an approach within this distance (given their gregarious nature and large group size) and implement active sonar powerdown or shutdown. However, the Navy's proposed mitigation has a provision that allows

the Navy to continue operation of MFAS if the animals are clearly bow-riding even after the Navy has initially maneuvered to try and avoid closing with the animals. Since these animals sometimes bow-ride they could potentially be exposed to levels associated with TTS as they approach or depart from bow-riding. As mentioned above and indicated in Table 5a and Table 5b, vocalizations of these species might overlap with the MFAS/HFAS TTS frequency range (2 to 20 kHz), which could potentially temporarily decrease an animal's sensitivity to the calls of conspecifics or returning echolocation signals. However, as noted previously, NMFS does not anticipate TTS of a long duration or severe degree to occur as a result of exposure to MFAS/HFAS.

The acoustic analysis further predicts that six Pacific white-sided dolphins would be exposed to levels of pressure and/or energy from explosive detonations that would result in Level B harassment by TTS, and 12 could be exposed to levels associated with behavioral disturbance. NMFS believes that this is unlikely because of: The distance within which they would have to approach the explosive source; and the likelihood that Navy monitors would, before or during exercise monitoring, detect these large-grouped gregarious animals prior to an approach within this distance and require a delay of the exercise.

Pacific white-sided dolphins occur across the central north Pacific waters to latitudes as low as (or lower than) 38 °N and northward to the Bering Sea and coastal areas of southern Alaska. In the eastern north Pacific, the species occurs from the southern Gulf of California, north to the GoA, west to Amchitka in the Aleutian Islands, and is rarely encountered in the southern Bering Sea. Pacific white-sided dolphins occur regularly year-round throughout the GoA. They are widely distributed along the shelf break, continental slope, and in offshore waters. In Alaska, peak abundance is between July and August, when Pacific white-sided dolphins tend to congregate near the Fairweather Grounds in the southeastern GoA and Portlock Bank in the northeast part of the TMAA (Angliss and Allen, 2008; DoN, 2006). The minimum population estimate for the North Pacific stock is 26,880 (CV = 0.90) individuals (Angliss and Allen, 2008).

The GoA TMAA activities are not expected to occur in an area/time of specific importance for reproduction, feeding, or other known critical behaviors. Consequently, the activities are not expected to adversely impact rates of recruitment or survival of Pacific white-sided dolphins. Based on the general information contained in the Negligible Impact Analysis section and this species-specific summary of the effects of the takes, NMFS has preliminarily determined that the Navy's specified activities will have a negligible impact on this species.

Porpoises

The acoustic analysis predicts that the following numbers of Level B behavioral harassments of the associated species will occur: 206,374 Dall's porpoises and 5,440 harbor porpoises. This estimate represents the total number of exposures and not necessarily the number of individuals exposed, as a single individual may be exposed multiple times over the course of a year.

Although a portion (768 Dall's porpoises) of the modeled Level B Harassment takes for these species is predicted to be in the form of TTS from MFAS, NMFS believes it is unlikely that all of the individuals estimated will incur TTS because of the distance within which they would have to approach the active sonar source (approximately 459 ft (140 m) for the most powerful source), the fact that many animals will likely avoid active sonar sources to some degree, and the likelihood that Navy monitors would detect these animals prior to an approach within this distance and implement active sonar powerdown or shutdown. Navy lookouts will likely detect a group of dolphins given their relatively short dives, gregarious behavior, and large average group size. However, the Navy's proposed mitigation has a provision that allows the Navy to continue operation of MFAS if the animals are clearly bow-riding even after the Navy has initially maneuvered to try and avoid closing with the animals. Since these animals sometimes bow-ride they could potentially be exposed to levels associated with TTS as they approach or depart from bow-riding. As mentioned above and indicated in Table 5a and Table 5b, some porpoise vocalizations might overlap with the MFAS/HFAS TTS frequency range (2 to 20 kHz), which could potentially temporarily decrease an animal's sensitivity to the calls of conspecifics or returning echolocation signals. However, as noted previously, NMFS does not anticipate TTS of a long duration or severe degree to occur as a result of exposure to MFAS/HFAS.

Acoustic analysis also predicted that 37 Dall's porpoises would be exposed to sound or pressure from explosives at levels expected to result in TTS. For the same reasons noted above, NMFS anticipates that the Navy watchstanders would likely detect these species and implement the mitigation to avoid exposure. However, the range to TTS for a few of the larger explosives is larger than the associated exclusion zones for BOMBEX, MISSILEX, or SINKEX (see Table 3), and therefore NMFS anticipates that TTS might not be entirely avoided during those exercises.

Acoustic analysis also predicted that three Dall's porpoises might be exposed to sound or pressure from sonar (one) and explosive detonations (two) that would result in PTS or injury. In addition, the analysis predicted that one Dall's porpoise mortality may occur as a result of exposure to pressure/energy levels from explosive detonations. For the same reasons listed above (group size, dive and social behavior), NMFS anticipates that the Navy watchstanders would detect these species and implement the mitigation measures to avoid exposure. In the case of all explosive exercises, the exclusion zones are 2–12 times larger than the estimated distance at which an animal would be exposed to injurious sounds or pressure waves.

No areas of specific importance for reproduction or feeding for porpoises have been identified in the GoA TMAA. Table 4 shows the estimated abundance of the affected porpoise stocks.

Based on the general information contained in the Negligible Impact Analysis section and this stock-specific summary of the effects of the takes, NMFS has preliminarily determined that the Navy's specified activities will have a negligible impact on these species.

Steller Sea Lion (MMPA Depleted/ESA-Listed)

The risk function and Navy post-modeling analysis estimates that 11,106 Steller sea lions would be exposed to non-TTS (behavioral) Level B harassment, two Steller sea lions would be exposed to TTS Level B harassment and no Steller sea lions would be exposed to Level A harassment (11,105 from sonar and three from at-sea explosions). These estimates represent the total number of takes and not necessarily the number of individuals taken, as a single individual may be taken multiple times over the course of the year. The short duration and intermittent transmission of the sonar signals, combined with relatively rapid vessel speed, reduces the likelihood that exposure to sonar sound would cause a behavioral response that may affect vital functions, TTS, or PTS. The set-up procedures and checks required for

safety of event participants make it unlikely that Steller sea lions would remain in an area undetected before explosive detonation occurred.

The minimum abundance estimate for the western U.S. stock of Steller sea lions is 38,988 individuals and for the Eastern stock is 45,095 to 55,832 (Angliss and Allen, 2008). Given the wide dispersal of individuals, both the western and eastern U.S. stocks may occur in the GoA (DoN, 2006; Angliss and Outlaw, 2007; NMFS, 2008), with about 70 percent of the population living in Alaskan waters. Relative to the population size, the Navy's activities are anticipated to result only in a limited number of Level B harassment takes. For the GoA, foraging habitat is primarily shallow, nearshore, and continental shelf waters 4.3 to 13 nm (8 to 24 km) offshore with a secondary occurrence inshore of the 3,289 ft (1,000 m) isobaths, and a rare occurrence seaward of the 3,280 ft (1,000 m) isobaths. Steller sea lions have been sighted foraging in the middle of the GoA (DoN, 2006). The April 2009 survey in the TMAA encountered two groups of Steller sea lions (Rone *et al.,* 2009). No aquatic foraging critical habitat exists within the TMAA. Steller sea lions form large rookeries during late spring and most births occur from mid-May through mid-July outside the boundaries of the TMAA. There are no known areas used by Steller sea lions for reproduction or calving within the TMAA. Based on the general information contained in the Negligible Impact Analysis section and this species-specific summary of the effects of the takes, NMFS has preliminarily determined that the Navy's specified activities will have a negligible impact on this species.

California Sea Lion

There are not sufficient numbers of California sea lions present in the TMAA to allow for acoustic impact modeling. Even if an accurate abundance or density could be derived for these species, being so few in number in the TMAA, accepted modeling methodology would predict zero exposures. Therefore, for each proposed 21-day exercise period, the number of behavioral harassments will be based on an assumption of having exposed the average group size to one instance of behavioral harassment to account for all acoustic sources for purposes of this analysis in the TMAA. It is assumed, given that California sea lions are very rare in the GoA, that they would only be encountered individually (*i.e.,* average group size of one) even if a prey species was running. In order to account for rare animals, the Navy requests authorization to take two California sea lions by non-TTS Level B harassment. No TTS Level B harassment or Level A harassment is anticipated.

The abundance estimate for the U.S. stock of California sea lions is 238,000 individuals (Carretta *et al.,* 2007b). This number is from counts during the 2001 breeding season of animals that were ashore at the four major rookeries in Southern California and at haulout sites north to the Oregon/California border. The few California sea lions recorded in Alaska are usually observed at Steller sea lion rookeries and haulout sites with most sightings recorded between March and May, although they may be found in the GoA throughout the year (Maniscalco *et al.,* 2004; DoN, 2006). During August and September, after the mating season, adult male California sea lions migrate to feeding areas as far north as the GoA (Lowry *et al.,* 1991). They remain there until spring (March-May), when they migrate southward to the breeding colonies. The GoA is outside of the known breeding range for California sea lions. There are no known areas used by California sea lions for reproduction or calving in the TMAA. Based on the general information contained in the Negligible Impact Analysis section and this species-specific summary of the effects of the takes, NMFS has preliminarily determined that the Navy's specified activities will have a negligible impact on this species.

Harbor Seal

The Navy's acoustic analysis estimates that one harbor seal would be exposed to MFAS/HFAS at sound levels likely to result in Level B harassment. This Level B take is anticipated to be in the form of behavioral disturbance as described in the Definition of Harassment: Level B Harassment section; no TTS takes are estimated.

The acoustic analysis further predicts that one harbor seal would be exposed to levels of pressure and/or energy from explosive detonations that would result in Level B harassment. This Level B take is also anticipated to be in the form of behavioral disturbance and no TTS takes are estimated from exposure to levels of pressure and/or energy from explosive detonations.

The population estimate for the Gulf of Alaska stock of harbor seals is 45,975 (CV = 0.04) (Angliss and Allen, 2008). The harbor seal is one of the most widespread of the pinniped species distributed from the eastern Baltic Sea, west across the Atlantic and Pacific Oceans to southern Japan, along the coast and offshore islands of the GoA (DoN, 2006). With few exceptions, harbor seals in the GoA are located in shallow nearshore areas and not at sea in the TMAA. Harbor seals, therefore, should be very rare in the small section of the TMAA nearest Kenai Peninsula, Montague Island, and Middleton Island. During the April 2009 survey, no harbor seals were encountered within the TMAA (Rone *et al.,* 2009). There are harbor seal haulouts along the shoreline of southeast Alaska, the south side of the Alaska Peninsula, the Aleutian Islands, and Middleton and Montague Islands (Hoover, 1988; Lowrey *et al.,* 2001; Boveng *et al.,* 2003). However, there are no known preferred habitat areas used by harbor seals within the TMAA. Based on the general information contained in the Negligible Impact Analysis section and this species-specific summary of the effects of the takes, NMFS has preliminarily determined that the Navy's specified activities will have a negligible impact on this species.

Northern Elephant Seal

The Navy's acoustic analysis estimates that 2,064 northern elephant seals would be exposed to MFAS/HFAS at sound levels likely to result in Level B harassment. This estimate represents the total number of takes and not necessarily the number of individuals taken, as a single individual may be taken multiple times over the course of the year. These Level B takes are anticipated to be in the form of behavioral disturbance as described in the Definition of Harassment: Level B Harassment section, and no TTS takes are estimated from exposure to MFAS/HFAS.

The acoustic analysis further predicts that one northern elephant seal would be exposed to levels of pressure and/or energy from explosive detonations that would result in Level B harassment by TTS, and four could be exposed to levels associated with behavioral disturbance. NMFS believes it unlikely that a northern elephant seal will incur TTS because of: The distance within which they would have to approach to explosive source; and the likelihood that Navy monitors would, during pre-exercise monitoring or while an exercise is taking place, detect these pinnipeds (because of the relatively short duration of their dives and their tendency to rest near the surface) prior to an approach within this distance and implement the appropriate mitigation measures.

The population estimate for the California Breeding stock of northern elephant seals is 124,000 (Carretta *et al.,* 2007). Northern elephant seals are endemic to the North Pacific Ocean, occurring almost exclusively in the

eastern and central North Pacific. Individuals from the California breeding stock do occur regularly in the GoA year-round (Calkins, 1986). Typically, only sub-adult and adult male elephant seals forage in the GoA with a peak abundance in the spring and fall (Le Boeuf *et al.,* 2000). There are no known areas used by northern elephant seals for reproduction or calving in the TMAA. Based on the general information contained in the Negligible Impact Analysis section and this species-specific summary of the effects of the takes, NMFS has preliminarily determined that the Navy's specified activities will have a negligible impact on this species.

Northern Fur Seal (Eastern Pacific Stock MMPA Depleted)

The Navy's acoustic analysis estimates that 154,160 northern fur seals would be exposed to MFAS/HFAS at sound levels likely to result in Level B harassment. This estimate represents the total number of takes and not necessarily the number of individuals taken, as a single individual may be taken multiple times over the course of the year. These Level B takes are anticipated to be primarily in the form of behavioral disturbance as described in the Definition of Harassment: Level B Harassment section, although 16 TTS takes are estimated from exposure to MFAS/HFAS. NMFS believes it unlikely that a northern fur seals, for which the TTS threshold is 206 dB SEL, will incur TTS because of the distance within which they would have to approach the MFAS source (approximately 121 ft (37 m) for the most powerful source), the fact that many animals will likely avoid active sonar sources to some degree, and the likelihood that Navy monitors would detect these pinnipeds (because of the relatively short duration of their dives and their tendency to rest near the surface) prior to an approach within this distance and implement active sonar powerdown or shutdown. In addition, some northern fur seal vocalizations might overlap with the MFAS/HFAS TTS frequency range (2 to 20 kHz), which could potentially temporarily decrease an animal's sensitivity to the calls of conspecifics or returning echolocation signals. However, as noted previously, NMFS does not anticipate TTS of a long duration or severe degree to occur as a result of exposure to MFAS/HFAS.

The acoustic analysis further predicts that 16 northern fur seals would be exposed to levels of pressure and/or energy from explosive detonations that would result in Level B harassment by TTS, 26 could be exposed to levels associated with behavioral disturbance, and one Level A harassment may occur. NMFS believes it unlikely that a northern fur seal will be subject to Level A harassment or incur TTS because of: The distance within which they would have to approach to explosive source; and the likelihood that Navy monitors would, during pre-exercise monitoring or while an exercise is taking place, detect these pinnipeds (because of the relatively short duration of their dives and their tendency to rest near the surface) prior to an approach within this distance and implement the appropriate mitigation measures.

The population estimate for the Eastern Pacific stock of northern fur seals is 665,550 (Angliss and Allen, 2008). Northern fur seals are a highly oceanic species spending all but 35 to 45 days per year at sea. They are usually sighted 70 to 130 km from land along the continental shelf and slope, seamounts, submarine canyons, and sea valleys, where there are upwellings of nutrient-rich water. The Eastern Pacific stock spends May through November inwaters and breeding colonies north of the GoA. In late November, females and young begin to arrive in offshore waters off California while adult males migrate only as far south as the GoA (Kajimura, 1984). Peak abundance in the TMAA should occur between March and June during the annual migration north to the Pribilof Islands breeding grounds (Fiscus *et al.,* 1976; Consiglieri *et al.,* 1982). However, some northern fur seals, particularly juvenile males and nonpregnant females, remain in the GoA throughout the summer and have been documented in the nearshore waters of Southeastern Alaska, Prince William Sound, Portlock Bank, and the middle of the GoA (Calkins, 1986; Fiscus *et al.,* 1976). Tagging data presented by Ream *et al.* (2005) indicate that the main foraging areas and the main migration route through the GoA are located far to the west of the TMAA. There are no known rookeries or haulout sites areas used by northern fur seals for reproduction or pupping in the vicinity of the TMAA. Based on the general information contained in the Negligible Impact Analysis section and this species-specific summary of the effects of the takes, NMFS has preliminarily determined that the Navy's specified activities will have a negligible impact on this species.

Preliminary Determination

Negligible Impact

Based on the analysis contained herein of the likely effects of the specified activity on marine mammals and their habitat and dependent upon the implementation of the mitigation and monitoring measures, NMFS preliminarily finds that the total taking from Navy training exercises utilizing MFAS/HFAS and underwater explosives in the GoA TMAA will have a negligible impact on the affected species or stocks. NMFS has proposed regulations for these exercises that prescribe the means of effecting the least practicable adverse impact on marine mammals and their habitat and set forth requirements pertaining to the monitoring and reporting of that taking.

Subsistence Harvest of Marine Mammals

NMFS has preliminarily determined that the issuance of 5-year regulations and subsequent LOAs for Navy training exercises in the GoA TMAA would not have an unmitigable adverse impact on the availability of the affected species or stocks for subsistence use. The tribes nearest the GoA TMAA include the Alutiiq, Eyak, and Tlingit groups; however, these tribes do not use the TMAA for subsistence. In March 2008, letter were sent to 12 tribes, including those listed above, by the Navy's Alaskan Command and Elemendorf Air Force Base requesting government-to-government consultation pursuant to Executive Order 13175. All 12 tribes indicated that they have no concerns over the proposed action as described in the GoA TMAA DEIS. The Navy will continue to keep the tribes informed of the timeframes of future joint training exercises.

As noted above, NMFS will consider all comments, suggestions and/or concerns submitted by the public during the proposed rulemaking comment period to help inform our final decision, particularly with respect to our negligible impact determination and the proposed mitigation and monitoring measures.

ESA

There are eight marine mammal species under NMFS jurisdiction that are listed as endangered or threatened under the ESA with confirmed or possible occurrence in the TMAA: Cook Inlet beluga whale, North Pacific right whale, humpback whale, sei whale, fin whale, blue whale, sperm whale, and Steller sea lion. Typically, the Cook Inlet beluga whale does not leave Cook Inlet, which is approximately 70 nm (129.6 km) from the nearest edge of the TMAA. Based on this information, Cook Inlet beluga whales are considered extralimital to the TMAA and will not be considered further for analysis under the MMPA and the Navy has concluded

that the proposed action will have no effect on Cook Inlet beluga whales. If NMFS concurs with this determination, for the remaining seven species, the Navy will consult with NMFS pursuant to section 7 of the ESA, and NMFS will also consult internally on the issuance of LOAs under section 101(a)(5)(A) of the MMPA for GoA TMAA activities. Consultation will be concluded prior to a determination on the issuance of the final rule and an LOA.

NEPA

NMFS has participated as a cooperating agency on the Navy's Draft Environmental Impact Statement (DEIS) for the GoA TMAA, which was published on December 11, 2009. The Navy's DEIS is posted on NMFS' Web site: *http://www.nmfs.noaa.gov/pr/permits/incidental.htm#applications.* NMFS intends to adopt the Navy's Final EIS (FEIS), if adequate and appropriate. Currently, we believe that the adoption of the Navy's FEIS will allow NMFS to meet its responsibilities under NEPA for the issuance of regulations and an LOA for GoA TMAA. If the Navy's FEIS is deemed inadequate, NMFS would supplement the existing analysis to ensure that we comply with NEPA prior to the issuance of the final rule or LOA.

Classification

This action does not contain any collection of information requirements for purposes of the Paperwork Reduction Act.

The Office of Management and Budget has determined that this proposed rule is not significant for purposes of Executive Order 12866.

Pursuant to the Regulatory Flexibility Act (RFA), the Chief Counsel for Regulation of the Department of Commerce has certified to the Chief Counsel for Advocacy of the Small Business Administration that this proposed rule, if adopted, would not have a significant economic impact on a substantial number of small entities. The RFA requires Federal agencies to prepare an analysis of a rule's impact on small entities whenever the agency is required to publish a notice of proposed rulemaking. However, a Federal agency may certify, pursuant to 5 U.S.C. 605 (b), that the action will not have a significant economic impact on a substantial number of small entities. The Navy is the sole entity that will be affected by this rulemaking, not a small governmental jurisdiction, small organization, or small business, as defined by the RFA. Any requirements imposed by a Letter of Authorization issued pursuant to these regulations, and any monitoring or reporting requirements imposed by these regulations, will be applicable only to the Navy. NMFS does not expect the issuance of these regulations or the associated LOAs to result in any impacts to small entities pursuant to the RFA. Because this action, if adopted, would directly affect the Navy and not a small entity, NMFS concludes the action would not result in a significant economic impact on a substantial number of small entities.

List of Subjects in 50 CFR Part 218

Exports, Fish, Imports, Incidental take, Indians, Labeling, Marine mammals, Navy, Penalties, Reporting and recordkeeping requirements, Seafood, Sonar, Transportation.

Dated: October 1, 2010.

Eric C. Schwaab,

Assistant Administrator for Fisheries, National Marine Fisheries Service.

For reasons set forth in the preamble, 50 CFR part 218 is proposed to be amended as follows:

PART 218—REGULATIONS GOVERNING THE TAKING AND IMPORTING OF MARINE MAMMALS

1. The authority citation for part 218 continues to read as follows:

Authority: 16 U.S.C. 1361 *et seq.*

2. Subpart M is added to part 218 to read as follows:

Subpart M—Taking and Importing Marine Mammals; U.S. Navy's Gulf of Alaska Temporary Maritime Activities Area (GoA TMAA)

Sec.

218.120 Specified activity and geographical area.
218.121 [Reserved]
218.122 Permissible methods of taking.
218.123 Prohibitions.
218.124 Mitigation.
218.125 Requirements for monitoring and reporting.
218.126 Applications for Letters of Authorization.
218.127 Letters of Authorization.
218.128 Renewal of Letters of Authorization and adaptive management.
218.129 Modifications to Letters of Authorization.

Subpart M—Taking and Importing Marine Mammals; U.S. Navy's Gulf of Alaska Temporary Maritime Activities Area (GoA TMAA)

§ 218.120 Specified activity and geographical area.

(a) Regulations in this subpart apply only to the U.S. Navy for the taking of marine mammals that occurs in the area outlined in paragraph (b) of this section and that occur incidental to the activities described in paragraph (c) of this section.

(b) The taking of marine mammals by the Navy may be authorized in a Letter of Authorization (LOA) only if it occurs within the Gulf of Alaska Temporary Maritime Activities Area (GoA TMAA) (as depicted in Figure 1–1 in the Navy's application for GoA TMAA), which is bounded by a hexagon with the following six corners: 57°30′ N. lat., 141°30′ W. long.; 59°36′ N. lat., 148°10′ W. long.; 58°57′ N. lat., 150°04′ W. long.; 58°20′ N. lat., 151°00′ W. long.; 57°16′ N. lat., 151°00′ W. long.; and 55°30′ N. lat, 142°00′ W. long.

(c) The taking of marine mammals by the Navy may be authorized in an LOA only if it occurs incidental to the following activities within the designated amounts of use:

(1) The use of the following mid-frequency active sonar (MFAS) sources, high-frequency active sonar (HFAS) sources for U.S. Navy anti-submarine warfare (ASW), in the amounts and in the locations indicated below (± 10 percent):

(i) AN/SQS–53 (hull-mounted active sonar)—up to 2,890 hours over the course of 5 years (an average of 578 hours per year);

(ii) AN/SQS–56 (hull-mounted active sonar)—up to 260 hours over the course of 5 years (an average of 52 hours per year);

(iii) AN/SSQ–62 (Directional Command Activated Sonobuoy System (DICASS) sonobuoys)—up to 1,330 sonobuoys over the course of 5 years (an average of 266 sonobuoys per year);

(iv) AN/AQS–22 (helicopter dipping sonar)—up to 960 "dips" over the course of 5 years (an average of 192 "dips" per year);

(v) AN/BQQ–10 (submarine hull-mounted sonar)—up to 240 hours over the course of 5 years (an average of 48 hours per year);

(vi) MK–48 (torpedo)—up to 10 torpedoes over the course of 5 years (a maximum of 2 torpedoes per year);

(vii) AN/SSQ–110A (IEER)—up to 400 buoys deployed over the course of 5 years (an average of 80 per year maximum combined use of AN/SSQ–110A or AN/SSQ–125);

(viii) AN/SSQ–125 (MAC)—up to 400 buoys deployed over the course of 5 years (an average of 80 per year maximum combined use of AN/SSQ–110A or AN/SSQ–125);

(ix) Range Pingers—up to 400 hours over the course of 5 years (an average of 80 hours per year);

(x) SUS MK–84—up to 120 devices over the course of 5 years (an average of 24 per year); and

(xi) PUTR Transponder—up to 400 hours over the course of 5 years (an average of 80 hours per year).

(2) The detonation of the underwater explosives indicated in paragraph (c)(2)(i) of this section conducted as part of the training events indicated in paragraph (c)(2)(ii) of this section:

(i) Underwater Explosives (Net Explosive Weight (NEW)):

(A) 5″ Naval Gunfire (9.5 lbs NEW);

(B) 76 mm rounds (1.6 lbs NEW);

(C) Maverick (78.5 lbs NEW);

(D) MK–82 (238 lbs NEW);

(E) MK–83 (238 lbs NEW);

(F) MK–83 (574 lbs NEW);

(G) MK–84 (945 lbs NEW);

(H) MK–48 (851 lbs NEW);

(I) AN/SSQ–110A (IEER explosive sonobuoy—5 lbs NEW);

(ii) Training Events:

(A) Gunnery Exercises (S–S GUNEX)—up to 60 exercises over the course of 5 years (an average of 12 per year);

(B) Bombing Exercises (BOMBEX)—up to 180 exercises over the course of 5 years (an average of 36 per year);

(C) Sinking Exercises (SINKEX)—up to 10 exercises over the course of 5 years (a maximum of 2 per year);

(D) Extended Echo Ranging and Improved Extended Echo Ranging (EER/IEER) Systems—up to 400 deployments over the course of 5 years (an average of 80 per year);

(E) Missile exercises (A–S MISSILEX)—up to 20 exercises over the course of 5 years (an average of 4 per year).

(d) The taking of marine mammals may also be authorized in an LOA for the activities and sources listed in § 218.120(c) should the amounts (*i.e.,* hours, dips, number of exercises) vary from those estimated in § 218.120(c), provided that the variation does not result in exceeding the amount of take indicated in § 218.122.

§ 218.121 [Reserved]

§ 218.122 Permissible methods of taking.

(a) Under Letters of Authorization issued pursuant to §§ 216.106 and 218.127 of this chapter, the Holder of the Letter of Authorization (hereinafter "Navy") may incidentally, but not intentionally, take marine mammals within the area described in § 218.120(b), provided the activity is in compliance with all terms, conditions, and requirements of these regulations and the appropriate Letter of Authorization.

(b) The activities identified in § 218.120(c) must be conducted in a manner that minimizes, to the greatest extent practicable, any adverse impacts on marine mammals and their habitat.

(c) The incidental take of marine mammals under the activities identified in § 218.120(c) is limited to the species listed below in paragraphs (c)(4), (5), and (6) of this section by the indicated method of take and the indicated number of times (estimated based on the authorized amounts of sound source operation), but with the following allowances for annual variation in activities:

(1) In any given year, annual take, by harassment, of any species of marine mammal may not exceed the amount identified in paragraphs (c)(4) and (5) of this section, for that species by more than 25 percent (a post-calculation/estimation of which must be provided in the annual LOA application);

(2) In any given year, annual take by harassment of all marine mammal species combined may not exceed the estimated total of all species combined, indicated in paragraphs (c)(4) and (5) of this section, by more than 10 percent; and

(3) Over the course of the effective period of this subpart, total take, by harassment, of any species may not exceed the 5-year amounts indicated in paragraphs (c)(4) and (5) of this section by more than 10 percent. A running calculation/estimation of takes of each species over the course of the years covered by the rule must be maintained.

(4) Level B Harassment:

(i) Mysticetes:

(A) Humpback whale (*Megaptera novaeangliae*)—6,975 (an average of 1,395 annually);

(B) Fin whale (*Balaenoptera physalus*)—55,185 (an average of 11,037 annually);

(C) Blue whale (*Balaenoptera musculus*)—10 (an average of 2 annually);

(D) Sei whale (*Balaenoptera borealis)*—40 (an average of 8 annually);

(E) Minke whale (*Balaenoptera acutorostrata*)—3,405 (an average of 681 annually);

(F) Gray whale (*Eschrichtius robustus*)—1,940 (an average of 388 annually); and

(G) North Pacific right whale (*Eubalaena japonica*)—10 (an average of 2 annually).

(ii) Odontocetes:

(A) Sperm whales (*Physeter macrocephalus*)—1,645 (an average of 329 annually);

(B) Killer whale (*Orcinus orca*)—53,245 (an average of 10,649 annually);

(C) Harbor porpoise (*Phocoena phocoena*)—27,200 (an average of 5,440 annually);

(D) Baird's beaked whales (*Berardius bairdii*)—2,435 (an average of 487 annually);

(E) Cuvier's beaked whales (*Ziphius cavirostris*)—11,560 (an average of 2,312 annually);

(F) Stejneger's beaked whales (*Mesoplodon stejnegeri*)—11,565 (an average of 2,313 annually);

(G) Pacific white-sided dolphin (*Lagenorhynchus obliquidens*)—84,955 (an average of 16,991 annually); and

(H) Dall's porpoise (*Phocoenoides dalli*)—1,031,870 (an average of 206,374 annually).

(iii) Pinnipeds:

(A) Steller sea lion (*Eumetopias jubatus*)—55,540 (an average of 11,108 annually)

(B) California sea lion (*Zalophus californianus*)—10 (an average of 2 annually);

(C) Harbor seal (*Phoca vitulina richardsi*)—10 (an average of 2 annually);

(D) Northern elephant seal (*Mirounga angustirostris*)—10,345 (an average of 2,069 annually); and

(E) Northern fur seal (*Callorhinus ursinus*)—771,010 (an average of 154,202 annually).

(5) Level A Harassment and/or mortality of no more than 15 beaked whales (total), of any of the species listed in § 218.122(c)(1)(ii)(D) through (F) over the course of the 5-year regulations.

§ 218.123 Prohibitions.

No person in connection with the activities described in § 218.120 may:

(a) Take any marine mammal not specified in § 218.122(c);

(b) Take any marine mammal specified in § 218.122(c) other than by incidental take as specified in §§ 218.122(c)(1), (c)(2), and (c)(3);

(c) Take a marine mammal specified in § 218.122(c) if such taking results in more than a negligible impact on the species or stocks of such marine mammal; or

(d) Violate, or fail to comply with, the terms, conditions, and requirements of these regulations or a Letter of Authorization issued under §§ 216.106 and 218.127 of this chapter.

§ 218.124 Mitigation.

(a) When conducting training and utilizing the sound sources or explosives identified in § 218.120(c), the mitigation measures contained in a Letter of Authorization issued under §§ 216.106 and 218.127 of this chapter must be implemented. These mitigation measures include, but are not limited to:

(1) Personnel Training:

(i) All commanding officers (COs), executive officers (XOs), lookouts, Officers of the Deck (OODs), junior OODs (JOODs), maritime patrol aircraft

aircrews, and Anti-submarine Warfare (ASW) helicopter crews shall complete the NMFS-approved Marine Species Awareness Training (MSAT) by viewing the U.S. Navy MSAT digital versatile disk (DVD). All bridge lookouts shall complete both parts one and two of the MSAT; part two is optional for other personnel.

(ii) Navy lookouts shall undertake extensive training in order to qualify as a watchstander in accordance with the Lookout Training Handbook (Naval Education and Training Command [NAVEDTRA] 12968–D).

(iii) Lookout training shall include on-the-job instruction under the supervision of a qualified, experienced lookout. Following successful completion of this supervised training period, lookouts shall complete the Personal Qualification Standard Program, certifying that they have demonstrated the necessary skills (such as detection and reporting of partially submerged objects). Personnel being trained as lookouts can be counted among required lookouts as long as supervisors monitor their progress and performance.

(iv) Lookouts shall be trained in the most effective means to ensure quick and effective communication within the command structure in order to facilitate implementation of protective measures if marine species are spotted.

(v) All lookouts onboard platforms involved in ASW training events shall review the NMFS-approved Marine Species Awareness Training material prior to use of mid-frequency active sonar.

(vi) All COs, XOs, and officers standing watch on the bridge shall have reviewed the Marine Species Awareness Training material prior to a training event employing the use of MFAS/HFAS.

(2) General Operating Procedures (for all training types):

(i) Prior to major exercises, a Letter of Instruction, Mitigation Measures Message or Environmental Annex to the Operational Order shall be issued to further disseminate the personnel training requirement and general marine species protective measures.

(ii) COs shall make use of marine species detection cues and information to limit interaction with marine mammals to the maximum extent possible consistent with safety of the ship.

(iii) While underway, surface vessels shall have at least two lookouts with binoculars; surfaced submarines shall have at least one lookout with binoculars. Lookouts already posted for safety of navigation and man-overboard precautions may be used to fill this requirement. As part of their regular duties, lookouts shall watch for and report to the OOD the presence of marine mammals.

(iv) On surface vessels equipped with a multi-function active sensor, pedestal mounted "Big Eye" (20×110) binoculars shall be properly installed and in good working order to assist in the detection of marine mammals in the vicinity of the vessel.

(v) Personnel on lookout shall employ visual search procedures employing a scanning methodology in accordance with the Lookout Training Handbook (NAVEDTRA 12968–D).

(vi) After sunset and prior to sunrise, lookouts shall employ Night Lookouts Techniques in accordance with the Lookout Training Handbook (NAVEDTRA 12968–D).

(vii) While in transit, naval vessels shall be alert at all times, use extreme caution, and proceed at a "safe speed", which means the speed at which the CO can maintain crew safety and effectiveness of current operational directives, so that the vessel can take action to avoid a collision with any marine mammal.

(viii) When marine mammals have been sighted in the area, Navy vessels shall increase vigilance and take all reasonable actions to avoid collisions and close interaction of naval assets and marine mammals. Such action may include changing speed and/or direction and are dictated by environmental and other conditions (*e.g.,* safety, weather).

(ix) Navy aircraft participating in exercises at-sea shall conduct and maintain surveillance for marine mammals as long as it does not violate safety constraints or interfere with the accomplishment of primary operational duties.

(x) All marine mammal detections shall be immediately reported to assigned Aircraft Control Unit for further dissemination to ships in the vicinity of the marine species as appropriate when it is reasonable to conclude that the course of the ship will likely result in a closing of the distance to the detected marine mammal.

(xi) Naval vessels shall maneuver to keep at least 1,500 ft (500 yd or 457 m) away from any observed whale in the vessel's path and avoid approaching whales head-on. These requirements do not apply if a vessel's safety is threatened, such as when change of course will create an imminent and serious threat to a person, vessel, or aircraft, and to the extent vessels are restricted in their ability to maneuver. Restricted maneuverability includes, but is not limited to, situations when vessels are engaged in dredging, submerged activities, launching and recovering aircraft or landing craft, minesweeping activities, replenishment while underway and towing activities that severely restrict a vessel's ability to deviate course. Vessels shall take reasonable steps to alert other vessels in the vicinity of the whale. Given rapid swimming speeds and maneuverability of many dolphin species, naval vessels would maintain normal course and speed on sighting dolphins unless some condition indicated a need for the vessel to maneuver.

(3) Operating Procedures (for Anti-submarine Warfare (ASW) Operations):

(i) On the bridge of surface ships, there shall always be at least three people on watch whose duties include observing the water surface around the vessel.

(ii) All surface ships participating in ASW training events shall have, in addition to the three personnel on watch noted in paragraph (a)(3)(i) of this section, at least two additional personnel on watch as lookouts at all times during the exercise.

(iii) Personnel on lookout and officers on watch on the bridge shall have at least one set of binoculars available for each person to aid in the detection of marine mammals.

(iv) Personnel on lookout shall be responsible for reporting all objects or anomalies sighted in the water (regardless of the distance from the vessel) to the Officer of the Deck, since any object or disturbance (*e.g.,* trash, periscope, surface disturbance, discoloration) in the water may be indicative of a threat to the vessel and its crew or indicative of a marine mammal that may need to be avoided.

(v) All personnel engaged in passive acoustic sonar operation (including aircraft, surface ships, or submarines) shall monitor for marine mammal vocalizations and report the detection of any marine mammal to the appropriate watch station for dissemination and appropriate action.

(vi) During mid-frequency active sonar operations, personnel shall utilize all available sensor and optical systems (such as night vision goggles) to aid in the detection of marine mammals.

(vii) Aircraft with deployed sonobuoys shall use only the passive capability of sonobuoys when marine mammals are detected within 200 yd (183 m) of the sonobuoy.

(viii) Helicopters shall observe/survey the vicinity of an ASW exercise for 10 minutes before the first deployment of active (dipping) sonar in the water.

(ix) Helicopters shall not dip their sonar within 200 yd (183 m) of a marine

mammal and shall cease pinging if a marine mammal closes within 200 yd (183 m) after pinging has begun.

(x) Safety Zones—When marine mammals are detected by any means (aircraft, shipboard lookout, or acoustically) within 1,000 yd (914 m) of the sonar dome (the bow), the ship or submarine shall limit active transmission levels to at least 6 decibels (dB) below normal operating levels for that source (*i.e.,* limit to at most 229 dB for AN/SQS–53 and 219 for AN/SQS–56, etc.).

(A) Ships and submarines shall continue to limit maximum transmission levels by this 6–dB factor until the animal has been seen to leave the 1,000-yd (914 m) exclusion zone, has not been detected for 30 minutes, or the vessel has transited more than 2,000 yds (1,829 m) beyond the location of the last detection.

(B) Should a marine mammal be detected within 500 yd (457 m) of the sonar dome, active sonar transmissions shall be limited to at least 10 dB below the equipment's normal operating level (*i.e.,* limit to at most 225 dB for AN/SQS–53 and 215 for AN/SQS–56, etc.). Ships and submarines shall continue to limit maximum ping levels by this 10–dB factor until the animal has been seen to leave the 500-yd (457 m) safety zone (at which point the 6–dB powerdown applies until the animal leaves the 1,000-yd (914 m) safety zone), has not been detected for 30 minutes, or the vessel has transited more than 2,000 yd (1,829 m) beyond the location of the last detection.

(C) Should the marine mammal be detected within 200 yd (183 m) of the sonar dome, active sonar transmissions shall cease. Sonar shall not resume until the animal has been seen to leave the 200-yd (183 m) safety zone (at which point the 10–dB or 6–dB powerdowns apply until the animal leaves the 500-yd (457 m) or 1,000-yd (914 m) safety zone, respectively), has not been detected for 30 minutes, or the vessel has transited more than 2,000 yd (1,829 m) beyond the location of the last detection.

(D) Special conditions applicable for dolphins and porpoises only: If, after conducting an initial maneuver to avoid close quarters with dolphins or porpoises, the OOD concludes that dolphins or porpoises are deliberately closing to ride the vessel's bow wave, no further mitigation actions are necessary while the dolphins or porpoises continue to exhibit bow wave riding behavior.

(xi) Prior to start up or restart of active sonar, operators shall check that the Safety Zone radius around the sound source is clear of marine mammals.

(xii) Active sonar levels (generally)—Navy shall operate active sonar at the lowest practicable level, not to exceed 235 dB, except as required to meet tactical training objectives.

(xiii) Submarine sonar operators shall review detection indicators of close-aboard marine mammals prior to the commencement of ASW training events involving MFAS.

(xiv) If the need for power-down should arise (as detailed in § 218.114(a)(3)(x)) when the Navy is operating a hull-mounted or sub-mounted source above 235 db (infrequent), the Navy shall follow the requirements as though they were operating at 235 dB—the normal operating level (*i.e.,* the first power-down will be to 229 dB, regardless of at what level above 235 dB active sonar was being operated).

(4) Sinking Exercise:

(i) All weapons firing shall be conducted during the period 1 hour after official sunrise to 30 minutes before official sunset.

(ii) An exclusion zone with a radius of 1.0 nm (1.9 km) shall be established around each target. An additional buffer of 0.5 nm (0.9 km) will be added to account for errors, target drift, and animal movements. Additionally, a safety zone, which will extend beyond the buffer zone by an additional 0.5 nm (0.9 km), shall be surveyed. Together, the zones extend out 2 nm (3.7 km) from the target.

(iii) A series of surveillance over-flights shall be conducted within the exclusion and the safety zones, prior to and during the exercise, when feasible. Survey protocol shall be as follows:

(A) Overflights within the exclusion zone shall be conducted in a manner that optimizes the surface area of the water observed. This may be accomplished through the use of the Navy's Search and Rescue Tactical Aid, which provides the best search altitude, ground speed, and track spacing for the discovery of small, possibly dark objects in the water based on the environmental conditions of the day. These environmental conditions include the angle of sun inclination, amount of daylight, cloud cover, visibility, and sea state.

(B) All visual surveillance activities shall be conducted by Navy personnel trained in visual surveillance. At least one member of the mitigation team shall have completed the Navy's marine mammal training program for lookouts.

(C) In addition to the overflights, the exclusion zone shall be monitored by passive acoustic means, when assets are available. This passive acoustic monitoring shall be maintained throughout the exercise. Additionally, passive sonar onboard submarines may be utilized to detect any vocalizing marine mammals in the area. The OCE shall be informed of any aural detection of marine mammals and shall include this information in the determination of when it is safe to commence the exercise.

(D) On each day of the exercise, aerial surveillance of the exclusion and safety zones shall commence 2 hours prior to the first firing.

(E) The results of all visual, aerial, and acoustic searches shall be reported immediately to the OCE. No weapons launches or firing may commence until the OCE declares the safety and exclusion zones free of marine mammals.

(F) If a marine mammal is observed within the exclusion zone, firing shall be delayed until the animal is re-sighted outside the exclusion zone, or 30 minutes have elapsed. After 30 minutes, if the animal has not been re-sighted it can be assumed to have left the exclusion zone. The OCE shall determine if the marine mammal is in danger of being adversely affected by commencement of the exercise.

(G) During breaks in the exercise of 30 minutes or more, the exclusion zone shall again be surveyed for any marine mammal. If marine mammals are sighted within the exclusion zone or buffer zone, the OCE shall be notified, and the procedure described above shall be followed.

(H) Upon sinking of the vessel, a final surveillance of the exclusion zone shall be monitored for 2 hours, or until sunset, to verify that no marine mammals were harmed.

(iv) Aerial surveillance shall be conducted using helicopters or other aircraft based on necessity and availability. The Navy has several types of aircraft capable of performing this task; however, not all types are available for every exercise. For each exercise, the available asset best suited for identifying objects on and near the surface of the ocean shall be used. These aircraft shall be capable of flying at the slow safe speeds necessary to enable viewing of marine vertebrates with unobstructed, or minimally obstructed, downward and outward visibility. The exclusion and safety zone surveys may be cancelled in the event that a mechanical problem, emergency search and rescue, or other similar and unexpected event preempts the use of one of the aircraft onsite for the exercise.

(v) Every attempt shall be made to conduct the exercise in sea states that are ideal for marine mammal sighting, Beaufort Sea State 3 or less. In the event of a 4 or above, survey efforts shall be increased within the zones. This shall be accomplished through the use of an additional aircraft, if available, and conducting tight search patterns.

(vi) The exercise shall not be conducted unless the exclusion zone and the buffer zone can be adequately monitored visually. Should low cloud cover or surface visibility prevent adequate visual monitoring as described previously, the exercise shall be delayed until conditions improved, and all of the above monitoring criteria can be met.

(vii) In the event that any marine mammals are observed to be harmed in the area, a detailed description of the animal shall be taken, the location noted, and if possible, photos taken of the marine mammal. This information shall be provided to NMFS via the Navy's regional environmental coordinator for purposes of identification (see the draft Stranding Plan for detail).

(viii) An after action report detailing the exercise's time line, the time the surveys commenced and terminated, amount, and types of all ordnance expended, and the results of survey efforts for each event shall be submitted to NMFS.

(5) Surface-to-Surface Gunnery (up to 5-inch Explosive Rounds):

(i) For exercises using targets towed by a vessel, target-towing vessels shall maintain a trained lookout for marine mammals when feasible. If a marine mammal is sighted in the vicinity, the tow vessel shall immediately notify the firing vessel, which shall suspend the exercise until the area is clear.

(ii) A 600-yd (585 m) radius buffer zone shall be established around the intended target.

(iii) From the intended firing position, trained lookouts shall survey the buffer zone for marine mammals prior to commencement and during the exercise as long as practicable. Due to the distance between the firing position and the buffer zone, lookouts are only expected to visually detect breaching whales, whale blows, and large pods of dolphins and porpoises.

(iv) The exercise shall be conducted only when the buffer zone is visible and marine mammals are not detected within it.

(6) Surface-to-Surface Gunnery (non-explosive rounds):

(i) A 200-yd (183 m) radius buffer zone shall be established around the intended target.

(ii) From the intended firing position, trained lookouts shall survey the buffer zone for marine mammals prior to commencement and during the exercise as long as practicable.

(iii) If available, target towing vessels shall maintain a lookout (unmanned towing vessels will not have a lookout available). If a marine mammal is sighted in the vicinity of the exercise, the tow vessel shall immediately notify the firing vessel in order to secure gunnery firing until the area is clear.

(iv) The exercise shall be conducted only when the buffer zone is visible and marine mammals are not detected within the target area and the buffer zone.

(7) Surface-to-Air Gunnery (Explosive and Non-explosive Rounds):

(i) Vessels shall orient the geometry of gunnery exercises in order to prevent debris from falling in the area of sighted marine mammals.

(ii) Vessels shall expedite the attempt to recover any parachute deploying aerial targets to reduce the potential for entanglement of marine mammals.

(iii) Target towing aircraft shall maintain a lookout if feasible. If a marine mammal is sighted in the vicinity of the exercise, the tow aircraft shall immediately notify the firing vessel in order to secure gunnery firing until the area is clear.

(8) Air-to-Surface Gunnery (Explosive and Non-explosive Rounds):

(i) A 200-yd (183 m) radius buffer zone shall be established around the intended target.

(ii) If surface vessels are involved, lookout(s) shall visually survey the buffer zone for marine mammals to and during the exercise.

(iii) Aerial surveillance of the buffer zone for marine mammals shall be conducted prior to commencement of the exercise. Aerial surveillance altitude of 500 ft to 1,500 ft (152–456 m) is optimum. Aircraft crew/pilot shall maintain visual watch during exercises. Release of ordnance through cloud cover is prohibited; aircraft must be able to actually see ordnance impact areas.

(iv) The exercise shall be conducted only if marine mammals are not visible within the buffer zone.

(9) Small Arms Training (Grenades, Explosive and Non-explosive Rounds)—Lookouts shall visually survey for marine mammals. Weapons shall not be fired in the direction of known or observed marine mammals.

(10) Air-to-Surface At-sea Bombing Exercises (explosive bombs and rockets):

(i) If surface vessels are involved, trained lookouts shall survey for marine mammals. Ordnance shall not be targeted to impact within 1,000 yd (914 m) of known or observed marine mammals.

(ii) A 1,000-yd (914 m) radius buffer zone shall be established around the intended target.

(iii) Aircraft shall visually survey the target and buffer zone for marine mammals prior to and during the exercise. The survey of the impact area shall be made by flying at 1,500 ft (457 m) or lower, if safe to do so, and at the slowest safe speed. When safety or other considerations require the release of weapons without the releasing pilot having visual sight of the target area, a second aircraft, the "wingman," shall clear the target area and perform the clearance and observation functions required before the dropping plane may release its weapons. Both planes shall have direct communication to assure immediate notification to the dropping plane that the target area may have been fouled by encroaching animals or people. The clearing aircraft shall assure it has visual site of the target area at a maximum height of 1,500 ft (457 m). The clearing plane shall remain within visual sight of the target until required to clear the area for safety reasons. Survey aircraft shall employ most effective search tactics and capabilities.

(iv) The exercise shall be conducted only if marine mammals are not visible within the buffer zone.

(11) Air-to-Surface At-Sea Bombing Exercises (Non-explosive Bombs and Rockets):

(i) If surface vessels are involved, trained lookouts shall survey for marine mammals. Ordnance shall not be targeted to impact within 1,000 yd (914 m) of known or observed marine mammals.

(ii) A 1,000-yd (914 m) radius buffer zone shall be established around the intended target.

(iii) Aircraft shall visually survey the target and buffer zone for marine mammals prior to and during the exercise. The survey of the impact area shall be made by flying at 1,500 ft (457 m) or lower, if safe to do so, and at the slowest safe speed. When safety or other considerations require the release of weapons without the releasing pilot having visual sight of the target area, a second aircraft, the "wingman," shall clear the target area and perform the clearance and observation functions required before the dropping plane may release its weapons. Both planes must have direct communication to assure immediate notification to the dropping plane that the target area may have been fouled by encroaching animals or people. The clearing aircraft shall assure it has visual site of the target area at a

maximum height of 1,500 ft (457 m). The clearing plane shall remain within visual sight of the target until required to clear the area for safety reasons. Survey aircraft shall employ most effective search tactics and capabilities.

(iv) The exercise shall be conducted only if marine mammals and are not visible within the buffer zone.

(12) Air-to-Surface Missile Exercises (explosive and non-explosive):

(i) Aircraft shall visually survey the target area for marine mammals. Visual inspection of the target area shall be made by flying at 1,500 ft (457 m) or lower, if safe to do so, and at the slowest safe speed. Firing or range clearance aircraft must be able to actually see ordnance impact areas.

(ii) Explosive ordnance shall not be targeted to impact within 1,800 yd (1646 m) of sighted marine mammals.

(13) Aircraft Training Activities Involving Non-Explosive Devices: Non-explosive devices such as some sonobuoys and inert bombs involve aerial drops of devices that have the potential to hit marine mammals if they are in the immediate vicinity of a floating target. The exclusion zone (200 yd), therefore, shall be clear of marine mammals and around the target location.

(14) Extended Echo Ranging/ Improved Extended Echo Ranging (EER/ IEER):

(i) Crews shall conduct visual reconnaissance of the drop area prior to laying their intended sonobuoy pattern. This search shall be conducted at an altitude below 500 yd (457 m) at a slow speed, if operationally feasible and weather conditions permit. In dual aircraft operations, crews are allowed to conduct coordinated area clearances.

(ii) Crews shall conduct a minimum of 30 minutes of visual and aural monitoring of the search area prior to commanding the first post detonation. This 30-minute observation period may include pattern deployment time.

(iii) For any part of the briefed pattern where a post (source/receiver sonobuoy pair) shall be deployed within 1,000 yd (914 m) of observed marine mammal activity, the Navy shall deploy the receiver ONLY and monitor while conducting a visual search. When marine mammals are no longer detected within 1,000 yd (914 m) of the intended post position, the Navy shall co-locate the explosive source sonobuoy (AN/ SSQ–110A) (source) with the receiver.

(iv) When operationally feasible, Navy crews shall conduct continuous visual and aural monitoring of marine mammal activity. This is to include monitoring of own-aircraft sensors from first sensor placement to checking off station and out of RF range of these sensors.

(v) Aural Detection—If the presence of marine mammals is detected aurally, then that shall cue the Navy aircrew to increase the diligence of their visual surveillance. Subsequently, if no marine mammals are visually detected, then the crew may continue multi-static active search.

(vi) Visual Detection—If marine mammals are visually detected within 1,000 yd (914 m) of the explosive source sonobuoy (AN/SSQ–110A) intended for use, then that payload shall not be detonated. Aircrews may utilize this post once the marine mammals have not been re-sighted for 30 minutes, or are observed to have moved outside the 1,000-yd (914 m) safety buffer. Aircrews may shift their multi-static active search to another post, where marine mammals are outside the 1,000-yd (914 m) safety buffer.

(vii) Aircrews shall make every attempt to manually detonate the unexploded charges at each post in the pattern prior to departing the operations area by using the "Payload 1 Release" command followed by the "Payload 2 Release" command. Aircrews shall refrain from using the "Scuttle" command when two payloads remain at a given post. Aircrews shall ensure that a 1,000-yd (914 m) safety buffer, visually clear of marine mammals, is maintained around each post as is done during active search operations.

(viii) Aircrews shall only leave posts with unexploded charges in the event of a sonobuoy malfunction, an aircraft system malfunction, or when an aircraft must immediately depart the area due to issues such as fuel constraints, inclement weather, and in-flight emergencies. In these cases, the sonobuoy shall self-scuttle using the secondary or tertiary method.

(ix) The Navy shall ensure all payloads are accounted for. Explosive source sonobuoys (AN/SSQ–110A) that cannot be scuttled shall be reported as unexploded ordnance via voice communications while airborne, then upon landing via naval message.

(x) Marine mammal monitoring shall continue until out of own-aircraft sensor range.

(15) The Navy shall abide by the letter of the "Stranding Response Plan for Major Navy Training Exercises in the GoA TMAA" (available at: *http://www.nmfs.noaa.gov/pr/permits/incidental.htm*), which is incorporated herein by reference, to include the following measures:

(i) Shutdown Procedures—When an Uncommon Stranding Event (USE—defined in § 216.271) occurs during a Major Training Exercise (MTE) (as defined in the Stranding Plan, meaning including Multi-strike group exercises, Joint Expeditionary exercises, and Marine Air Ground Task Force exercises in the GoA TMAA), the Navy shall implement the procedures described below.

(A) The Navy shall implement a Shutdown (as defined in the Stranding Response Plan for GoA TMAA) when advised by a NMFS Office of Protected Resources Headquarters Senior Official designated in the GoA TMAA Stranding Communication Protocol that a USE (as defined in the Stranding Response Plan for the GoA TMAA) involving live animals has been identified and that at least one live animal is located in the water. NMFS and Navy shall communicate, as needed, regarding the identification of the USE and the potential need to implement shutdown procedures.

(B) Any shutdown in a given area shall remain in effect in that area until NMFS advises the Navy that the subject(s) of the USE at that area die or are euthanized, or that all live animals involved in the USE at that area have left the area (either of their own volition or herded).

(C) If the Navy finds an injured or dead marine mammal floating at sea during an MTE, the Navy shall notify NMFS immediately or as soon as operational security considerations allow. The Navy shall provide NMFS with the species or description of the animal(s), the condition of the animal(s) including carcass condition if the animal(s) is/are dead), location, time of first discovery, observed behavior(s) (if alive), and photo or video of the animal(s) (if available). Based on the information provided, NMFS shall determine if, and advise the Navy whether a modified shutdown is appropriate on a case-by-case basis.

(D) In the event, following a USE, that: qualified individuals are attempting to herd animals back out to the open ocean and animals are not willing to leave, or animals are seen repeatedly heading for the open ocean but turning back to shore, NMFS and the Navy shall coordinate (including an investigation of other potential anthropogenic stressors in the area) to determine if the proximity of MFAS/ HFAS activities or explosive detonations, though farther than 14 nm from the distressed animal(s), is likely decreasing the likelihood that the animals return to the open water. If so, NMFS and the Navy shall further coordinate to determine what measures are necessary to further minimize that

likelihood and implement those measures as appropriate.

(ii) Within 72 hrs of NMFS notifying the Navy of the presence of a USE, the Navy shall provide available information to NMFS (per the GoA TMAA Communication Protocol) regarding the location, number and types of acoustic/explosive sources, direction and speed of units using MFAS/HFAS, and marine mammal sightings information associated with training activities occurring within 80 nm (148 km) and 72 hrs prior to the USE event. Information not initially available regarding the 80 nm (148 km) and 72 hrs prior to the event shall be provided as soon as it becomes available. The Navy shall provide NMFS investigative teams with additional relevant unclassified information as requested, if available.

(iii) Memorandum of Agreement (MOA)—The Navy and NMFS shall develop a MOA, or other mechanism, that will establish a framework whereby the Navy can (and provide the Navy examples of how they can best) assist NMFS with stranding investigations in certain circumstances.

(b) [Reserved]

§ 218.125 Requirements for monitoring and reporting.

(a) General Notification of Injured or Dead Marine Mammals—Navy personnel shall ensure that NMFS is notified immediately ((see Communication Plan) or as soon as clearance procedures allow) if an injured, stranded, or dead marine mammal is found during or shortly after, and in the vicinity of, any Navy training exercise utilizing MFAS, HFAS, or underwater explosive detonations. The Navy shall provide NMFS with the species or description of the animal(s), the condition of the animal(s) (including carcass condition if the animal is dead), location, time of first discovery, observed behavior(s) (if alive), and photo or video of the animal(s) (if available). In the event that an injured, stranded, or dead marine mammal is found by the Navy that is not in the vicinity of, or during or shortly after, MFAS, HFAS, or underwater explosive detonations, the Navy shall report the same information as listed above as soon as operationally feasible and clearance procedures allow.

(b) General Notification of Ship Strike—In the event of a ship strike by any Navy vessel, at any time or place, the Navy shall do the following:

(1) Immediately report to NMFS the species identification (if known), location (lat/long) of the animal (or the strike if the animal has disappeared), and whether the animal is alive or dead, or whether its status is unknown.

(2) Report to NMFS as soon as operationally feasible the size and length of animal, an estimate of the injury status (*e.g.,* dead, injured but alive, injured and moving, unknown, etc.), vessel class/type and operational status.

(3) Report to NMFS the vessel length, speed, and heading as soon as feasible.

(4) Provide NMFS a photo or video of the animal(s), if equipment is available.

(c) The Navy must conduct all monitoring and/or research required under the Letter of Authorization including abiding by the GoA TMAA Monitoring Plan. (*http://www.nmfs.noaa.gov/pr/permits/incidental.htm#applications*)

(d) Report on Monitoring required in paragraph (c) of this section—The Navy shall submit a report annually on December 15 describing the implementation and results (through October of the same year) of the monitoring required in paragraph (c) of this section. The Navy shall standardize data collection methods across ranges to allow for comparison in different geographic locations.

(e) *Sonar Exercise Notification*—The Navy shall submit to the NMFS Office of Protected Resources (specific contact information to be provided in LOA) either an electronic (preferably) or verbal report within 15 calendar days after the completion of any MTER indicating:

(1) Location of the exercise;

(2) Beginning and end dates of the exercise; and

(3) Type of exercise.

(f) Annual GoA TMAA Report—The Navy shall submit an Annual Exercise GoA TMAA Report on December 15 of every year (covering data gathered through October). This report shall contain the subsections and information indicated below.

(1) MFAS/HFAS Training Exercises—This section shall contain the following information for the following Coordinated and Strike Group Exercises: Joint Multi-strike Group Exercises; Joint Expeditionary Exercises; and Marine Air Ground Task Force GoA TMAA:

(i) Exercise Information (for each exercise):

(A) Exercise designator;

(B) Date that exercise began and ended;

(C) Location;

(D) Number and types of active sources used in the exercise;

(E) Number and types of passive acoustic sources used in exercise;

(F) Number and types of vessels, aircraft, etc., participating in exercise;

(G) Total hours of observation by watchstanders;

(H) Total hours of all active sonar source operation;

(I) Total hours of each active sonar source (along with explanation of how hours are calculated for sources typically quantified in alternate way (buoys, torpedoes, etc.)); and

(J) Wave height (high, low, and average during exercise).

(ii) Individual marine mammal sighting info (for each sighting in each exercise):

(A) Location of sighting;

(B) Species (if not possible—indication of whale/dolphin/pinniped);

(C) Number of individuals;

(D) Calves observed (y/n);

(E) Initial Detection Sensor;

(F) Indication of specific type of platform observation made from (including, for example, what type of surface vessel; *i.e.,* FFG, DDG, or CG);

(G) Length of time observers maintained visual contact with marine mammal(s);

(H) Wave height (ft);

(I) Visibility;

(J) Sonar source in use (y/n);

(K) Indication of whether animal is <200 yd, 200–500 yd, 500–1,000 yd, 1,000–2,000 yd, or >2,000 yd from sonar source in (x) above;

(L) Mitigation Implementation—Whether operation of sonar sensor was delayed, or sonar was powered or shut down, and how long the delay was;

(M) If source in use (x) is hull-mounted, true bearing of animal from ship, true direction of ship's travel, and estimation of animal's motion relative to ship (opening, closing, parallel); and

(N) Observed behavior—Watchstanders shall report, in plain language and without trying to categorize in any way, the observed behavior of the animals (such as animal closing to bow ride, paralleling course/speed, floating on surface and not swimming, etc.).

(iii) An evaluation (based on data gathered during all of the exercises) of the effectiveness of mitigation measures designed to avoid exposing marine mammals to MFAS. This evaluation shall identify the specific observations that support any conclusions the Navy reaches about the effectiveness of the mitigation.

(2) ASW Summary—This section shall include the following information as summarized from non-major training exercises (unit-level exercises, such as TRACKEXs):

(i) Total Hours—Total annual hours of each type of sonar source (along with explanation of how hours are calculated for sources typically quantified in alternate way (buoys, torpedoes, etc.)).

(ii) Cumulative Impacts—To the extent practicable, the Navy, in coordination with NMFS, shall develop and implement a method of annually reporting other training (*i.e.,* Unit Level Training (ULT)) utilizing hull-mounted sonar. The report shall present an annual (and seasonal, where practicable) depiction of non-major training exercises geographically across the GoA TMAA. The Navy shall include (in the GoA TMAA annual report) a brief annual progress update on the status of the development of an effective and unclassified method to report this information until an agreed-upon (with NMFS) method has been developed and implemented.

(3) Sinking Exercises (SINKEXs)—This section shall include the following information for each SINKEX completed that year:

(i) Exercise info:

(A) Location;

(B) Date and time exercise began and ended;

(C) Total hours of observation by watchstanders before, during, and after exercise;

(D) Total number and types of rounds expended/explosives detonated;

(E) Number and types of passive acoustic sources used in exercise;

(F) Total hours of passive acoustic search time;

(G) Number and types of vessels, aircraft, etc., participating in exercise;

(H) Wave height in feet (high, low, and average during exercise); and

(I) Narrative description of sensors and platforms utilized for marine mammal detection and timeline illustrating how marine mammal detection was conducted.

(ii) Individual marine mammal observation during SINKEX (by Navy lookouts) information:

(A) Location of sighting;

(B) Species (if not possible—indication of whale/dolphin/pinniped);

(C) Number of individuals;

(D) Calves observed (y/n);

(E) Initial detection sensor;

(F) Length of time observers maintained visual contact with marine mammal;

(G) Wave height (ft);

(H) Visibility;

(I) Whether sighting was before, during, or after detonations/exercise, and how many minutes before or after;

(J) Distance of marine mammal from actual detonations (or target spot if not yet detonated)—use four categories to define distance:

(*1*) The modeled injury threshold radius for the largest explosive used in that exercise type in that OPAREA (762 m for SINKEX in the GoA TMAA);

(*2*) The required exclusion zone (1 nm for SINKEX in the GoA TMAA);

(*3*) The required observation distance (if different than the exclusion zone (2 nm for SINKEX in the GoA TMAA); and

(*4*) Greater than the required observed distance. For example, in this case, the observer shall indicate if <762 m, from 762 m–1 nm, from 1 nm–2 nm, and > 2 nm.

(K) Observed behavior—Watchstanders shall report, in plain language and without trying to categorize in any way, the observed behavior of the animals (such as animal closing to bow ride, paralleling course/speed, floating on surface and not swimming etc.), including speed and direction.

(L) Resulting mitigation implementation—Indicate whether explosive detonations were delayed, ceased, modified, or not modified due to marine mammal presence and for how long.

(M) If observation occurs while explosives are detonating in the water, indicate munitions type in use at time of marine mammal detection.

(4) Improved Extended Echo-Ranging System (IEER) Summary:

(i) Total number of IEER events conducted in the GoA TMAA;

(ii) Total expended/detonated rounds (buoys); and

(iii) Total number of self-scuttled IEER rounds.

(5) Explosives Summary—The Navy is in the process of improving the methods used to track explosive use to provide increased granularity. To the extent practicable, the Navy shall provide the information described below for all of their explosive exercises. Until the Navy is able to report in full the information below, they shall provide an annual update on the Navy's explosive tracking methods, including improvements from the previous year.

(i) Total annual number of each type of explosive exercise (of those identified as part of the "specified activity" in this final rule) conducted in the GoA TMAA; and

(ii) Total annual expended/detonated rounds (missiles, bombs, etc.) for each explosive type.

(g) GoA TMAA 5-Yr Comprehensive Report—The Navy shall submit to NMFS a draft report that analyzes and summarizes all of the multi-year marine mammal information gathered during ASW and explosive exercises for which annual reports are required (Annual GoA TMAA Exercise Reports and GoA TMAA Monitoring Plan Reports). This report shall be submitted at the end of the fourth year of the rule (December 2014), covering activities that have occurred through October 2014.

(h) Comprehensive National ASW Report—By June, 2014, the Navy shall submit a draft National Report that analyzes, compares, and summarizes the active sonar data gathered (through January 1, 2014) from the watchstanders and pursuant to the implementation of the Monitoring Plans for the Northwest Training Range Complex, the Southern California Range Complex, the Atlantic Fleet Active Sonar Training, the Hawaii Range Complex, the Mariana Islands Range Complex, and the Gulf of Alaska.

(i) The Navy shall comply with the 2009 Integrated Comprehensive Monitoring Program (ICMP) Plan and continue to improve the program in consultation with NMFS. Changes and improvements to the program made during 2010 (as prescribed in the 2009 ICMP and deemed appropriate by the Navy and NMFS) will be described in an updated 2010 ICMP and submitted to NMFS by October 31, 2010, for review. An updated 2010 ICMP will be finalized by December 31, 2010.

§ 218.126 Applications for Letters of Authorization.

To incidentally take marine mammals pursuant to these regulations, the U.S. Citizen (as defined by § 216.103 of this chapter) conducting the activity identified in § 218.120(c) (*i.e.,* the Navy) must apply for and obtain either an initial Letter of Authorization in accordance with § 218.127 or a renewal under § 218.128.

§ 218.127 Letters of Authorization.

(a) A Letter of Authorization, unless suspended or revoked, will be valid for a period of time not to exceed the period of validity of this subpart, but must be renewed annually or biennially subject to renewal conditions in § 218.128.

(b) Each Letter of Authorization shall set forth:

(1) Permissible methods of incidental taking;

(2) Means of effecting the least practicable adverse impact on the species, its habitat, and on the availability of the species for subsistence uses (*i.e.,* mitigation); and

(3) Requirements for mitigation, monitoring and reporting.

(c) Issuance and renewal of the Letter of Authorization shall be based on a determination that the total number of marine mammals taken by the activity as a whole will have no more than a negligible impact on the affected species or stock of marine mammal(s).

§ 218.128 Renewal of Letters of Authorization and adaptive management.

(a) A Letter of Authorization issued under § 216.106 and § 218.127 of this chapter or the activity identified in § 218.120(c) shall be renewed annually or biennially upon:

(1) Notification to NMFS that the activity described in the application submitted under § 218.126 shall be undertaken and that there will not be a substantial modification to the described work, mitigation or monitoring undertaken during the upcoming 12–24 months;

(2) Receipt of the monitoring reports and notifications within the indicated timeframes required under § 218.125(b through j); and

(3) A determination by NMFS that the mitigation, monitoring, and reporting measures required under § 218.124 and the Letter of Authorization issued under §§ 216.126 and 218.127 of this chapter were undertaken and will be undertaken during the upcoming period of validity of a renewed Letter of Authorization.

(b) If a request for a renewal of a Letter of Authorization issued under §§ 216.126 and 216.128 indicates that a substantial modification, as determined by NMFS, to the described work, mitigation or monitoring undertaken during the upcoming season will occur, NMFS will provide the public a period of 30 days for review and comment on the request. Review and comment on renewals of Letters of Authorization are restricted to:

(1) New cited information and data indicating that the determinations made in this document are in need of reconsideration, and

(2) Proposed changes to the mitigation and monitoring requirements contained in these regulations or in the current Letter of Authorization.

(c) A notice of issuance or denial of a renewal of a Letter of Authorization will be published in the **Federal Register**.

(d) Adaptive Management—NMFS may modify or augment the existing mitigation or monitoring measures (after consulting with the Navy regarding the practicability of the modifications) if doing so creates a reasonable likelihood of more effectively accomplishing the goals of mitigation and monitoring set forth in the preamble of these regulations. Below are some of the possible sources of new data that could contribute to the decision to modify the mitigation or monitoring measures:

(1) Results from the Navy's monitoring from the previous year (either from the GoA TMAA or other locations).

(2) Findings of the Monitoring Workshop that the Navy will convene in 2011.

(3) Compiled results of Navy-funded research and development (R&D) studies (presented pursuant to the Integrated Comprehensive Monitoring Plan).

(4) Results from specific stranding investigations (either from the GoA TMAA or other locations, and involving coincident MFAS/HFAS or explosives training or not involving coincident use).

(5) Results from the Long Term Prospective Study described in the preamble to these regulations.

(6) Results from general marine mammal and sound research (funded by the Navy (described below) or otherwise).

§ 218.129 Modifications to Letters of Authorization.

(a) Except as provided in paragraph (b) of this section, no substantive modification (including withdrawal or suspension) to the Letter of Authorization by NMFS, issued pursuant to §§ 216.126 and 218.127 of this chapter and subject to the provisions of this subpart, shall be made until after notification and an opportunity for public comment has been provided. For purposes of this paragraph, a renewal of a Letter of Authorization under § 218.128, without modification (except for the period of validity), is not considered a substantive modification.

(b) If the Assistant Administrator determines that an emergency exists that poses a significant risk to the well-being of the species or stocks of marine mammals specified in § 218.120(b), a Letter of Authorization issued pursuant to §§ 216.126 and 218.127 of this chapter may be substantively modified without prior notification and an opportunity for public comment. Notification will be published in the **Federal Register** within 30 days subsequent to the action.

[FR Doc. 2010–25230 Filed 10–18–10; 8:45 am]

BILLING CODE 3510–22–P

Federal Register

Tuesday,
October 19, 2010

Part IV

Department of Homeland Security

Coast Guard

46 CFR Parts 97 and 148

Bulk Solid Hazardous Materials: Harmonization With the International Maritime Solid Bulk Cargoes (IMSBC) Code; Final Rule

DEPARTMENT OF HOMELAND SECURITY

Coast Guard

46 CFR Parts 97 and 148

[Docket No. USCG–2009–0091]

RIN 1625–AB47

Bulk Solid Hazardous Materials: Harmonization With the International Maritime Solid Bulk Cargoes (IMSBC) Code

AGENCY: Coast Guard, DHS.

ACTION: Final rule.

SUMMARY: The Coast Guard is harmonizing its regulations with amendments to Chapter VI and Chapter VII of the International Maritime Organization (IMO) International Convention for the Safety of Life at Sea, 1974, as amended, (SOLAS) that make the International Maritime Solid Bulk Cargoes (IMSBC) Code mandatory. The amendments require that all vessels subject to SOLAS, and carrying bulk solid cargoes other than grain, comply with the IMSBC Code. The Coast Guard is amending its regulations governing the carriage of solid hazardous materials in bulk to allow use of the IMSBC Code as an equivalent form of compliance for all domestic and foreign vessels operating in U.S. navigable waters. The amended Coast Guard regulations also expand the list of solid hazardous materials authorized for bulk transportation by vessel and include special handling procedures based on the IMSBC Code and existing special permits. These changes reduce the need for the current special permits required for the carriage of certain solid hazardous materials in bulk.

DATES: This final rule is effective January 1, 2011. The Coast Guard will not enforce collection of information requirements contained in this rule until the information collection is approved by the Office of Management and Budget (OMB), and the Coast Guard will publish a document in the **Federal Register** announcing approval of the information collection. The incorporation by reference of certain publications listed in the rule is approved by the Director of the Federal Register as of January 1, 2011.

ADDRESSES: Comments and material received from the public, as well as documents mentioned in this preamble as being available in the docket, are part of docket USCG–2009–0091 and are available for inspection or copying at the Docket Management Facility (M–30), U.S. Department of Transportation, West Building Ground Floor, Room W12–140, 1200 New Jersey Avenue, SE., Washington, DC 20590, between 9 a.m. and 5 p.m., Monday through Friday, except Federal holidays. You may also find this docket on the Internet by going to *http://www.regulations.gov,* inserting USCG–2009–0091 in the "Keyword" box, and then clicking "Search."

FOR FURTHER INFORMATION CONTACT: If you have questions on this rule, call or e-mail Richard Bornhorst, Office of Operating and Environmental Standards, Hazardous Materials Standards Division (CG–5223), Coast Guard, telephone 202–372–1426, e-mail *Richard.C.Bornhorst@uscg.mil.* If you have questions on viewing or submitting material to the docket, call Renee V. Wright, Program Manager, Docket Operations, telephone 202–366–9826.

SUPPLEMENTARY INFORMATION:

Table of Contents for Preamble

I. Abbreviations
II. Regulatory History
III. Basis and Purpose
IV. Background
V. Discussion of Comments and Changes
VI. Incorporation by Reference
VII. Regulatory Analyses
A. Regulatory Planning and Review
B. Small Entities
C. Assistance for Small Entities
D. Collection of Information
E. Federalism
F. Unfunded Mandates Reform Act
G. Taking of Private Property
H. Civil Justice Reform
I. Protection of Children
J. Indian Tribal Governments
K. Energy Effects
L. Technical Standards
M. Environment

I. Abbreviations

ACGIH American Conference of Governmental Industrial Hygienists
BC Code Code of Safe Practice for Solid Bulk Cargoes
BCSN Bulk Cargo Shipping Name
CFR Code of Federal Regulations
DHS Department of Homeland Security
DRI Direct Reduced Iron
FR **Federal Register**
IMO International Maritime Organization
IMSBC Code International Maritime Solid Bulk Cargoes Code
LFL Lower Flammability Limit
LSA Low Specific Activity
MISLE Marine Information for Safety and Law Enforcement
MHB Materials Hazardous only in Bulk
MSDS Material Safety Data Sheet
NEPA National Environmental Policy Act of 1969
N.O.S. Not Otherwise Specified
NPRM Notice of Proposed Rulemaking
NTTAA National Technology Transfer and Advancement Act
OMB Office of Management and Budget
PDM Potentially Dangerous Material
RQ Reportable Quantity
SOLAS International Convention for the Safety of Life at Sea, 1974, as amended
TLV Threshold Limit Value
TML Transportable Moisture Limit
UN United Nations
U.S.C. United States Code

II. Regulatory History

On June 17, 2010, we published a notice of proposed rulemaking (NPRM) entitled "Bulk Solid Hazardous Materials: Harmonization with the International Maritime Solid Bulk Cargoes (IMSBC) Code; Notice of proposed rulemaking" in the **Federal Register** (75 FR 34574). We also published a correction on June 18, 2010, addressing the environmental analysis checklist (75 FR 34682). We received one comment letter containing two comments regarding the NPRM. No public meeting was requested and none was held.

This rulemaking is related to a previous rulemaking (docket number: CGD 87–069) that the Coast Guard closed in 1995. The 1989 advance NPRM (54 FR 18308), 1994 NPRM (59 FR 17418) and public comments thereon, and the 1995 termination of the rulemaking (60 FR 18793) are all discussed in detail in the June 17, 2010, NPRM that preceded this final rule (75 FR 34574).

III. Basis and Purpose

The Secretary of Homeland Security delegated to the Coast Guard the authority necessary to conduct this rulemaking, including the authority to carry out the functions and exercise the authorities in 46 U.S.C. 3306 and 5111, and to carry out the functions of 46 U.S.C. 3306(a)(5) and 49 U.S.C. 5101 *et seq.* relating to the regulation of bulk transportation of hazardous materials loaded or carried on board a vessel without benefit of containers or labels. Under these and other authorities, the Coast Guard is promulgating these regulations to allow the use of the IMSBC Code as an equivalent form of compliance with 46 CFR part 148 for international shipments originating or concluding in the United States, subject to conditions and limitations.

The Coast Guard initiated this rulemaking to address international requirements for the carriage of hazardous materials in international maritime commerce, including requirements coming into effect on January 1, 2011, and to alleviate the burden on the public and the Coast Guard caused by the need to obtain and maintain special permits for the carriage of 30 solid cargoes not previously included in Coast Guard regulations. In order to address these concerns, this

rule implements international requirements, such as requirements that vessels carry oxygen analysis and gas detection equipment, and allows the use of the international standard—the IMSBC Code—as an equivalent form of compliance with domestic regulations. The rule also updates Coast Guard regulations to include cargoes that previously had to be transported under special permit, thereby reducing the burden on the public and on the Coast Guard.

IV. Background

The Coast Guard regulations governing the carriage of solid hazardous materials in bulk are found in 46 CFR parts 97 and 148. Part 148 prescribes regulations for the transport of solid hazardous materials in bulk by vessel on U.S. navigable waters. Subpart 148.01 includes, among other things, a list of permitted solid cargoes that may be transported without special permit from the Coast Guard; the list was last revised in 1984 (49 FR 16794). Prior to this rulemaking, the list did not cover 30 solid cargoes that are now shipped in bulk by vessel and that require special handling procedures to ensure safety in transportation. The Coast Guard therefore has issued special permits specifying conditions under which vessels may transport these additional bulk solid cargoes. Maintaining these special permits placed a burden on the Coast Guard and the regulated community.

In addition to the need to update the list of permitted cargoes, changes to international requirements necessitated this rulemaking. The carriage of hazardous materials in international maritime commerce is now governed by Chapter VII of SOLAS. In 1990 and 1991, the IMO amended Chapter VI of SOLAS, which formerly applied only to grain cargoes, to include all bulk solid cargoes. The amended Chapter VI of SOLAS requires that the master receive written cargo information, that the vessel carry oxygen analysis and gas detection equipment on board when the cargoes to be carried are likely to emit toxic or flammable gases, and that the master possess information regarding the ship's stability and the distribution of cargo after loading. On January 1, 1994, these amendments became binding for all nations signatory to SOLAS, including the United States.

In December 2008, IMO further amended SOLAS Chapter VI and Chapter VII to require compliance with the relevant provisions of the IMSBC Code for the carriage of bulk solid cargoes other than grain. The IMSBC Code, formerly known as the BC Code, provides standards for shippers, vessel operators, and masters to ensure the safe handling and carriage of bulk solid cargoes. Implementation of the IMSBC Code will become mandatory on January 1, 2011, and several countries have already adopted the Code, in whole or in part, as national regulation. Countries that are signatory to SOLAS will require compliance with the IMSBC Code for all bulk solid shipments occurring in their jurisdiction.

Several bulk solid cargoes covered by the IMSBC Code also are regulated by the Coast Guard under 46 CFR part 148, under either the list of permitted cargoes or the terms of a special permit.

V. Discussion of Comments and Changes

The Coast Guard received only one public comment letter containing two comments regarding the June 17, 2010, NPRM. That letter focused "specifically to proposed changes related to sulphur" and indicated the commenter "fully supports the U.S. Coast Guard's proposed changes" to Parts 97 and 148. The commenter also indicated its "support of transportation regulations and reasonable requirements that are based on technical and factual information and improve public safety." The Coast Guard appreciates the commenter's support.

After receiving these supportive comments, and taking into account the extensive discussion and public comment that preceded this rule, which is described above and in the June 17, 2010, NPRM, the Coast Guard adopts the proposed rule as final without substantive change. For a complete discussion of the rule, please see the discussion included in the NPRM. We have made nonsubstantive changes, however, to correct grammar, internal paragraph references, and a temperature conversion error, as discussed below.

Specifically, we made minor grammatical corrections in §§ 148.1(b), 148.8, 148.115(a), and 148.155(b)(3), and minor punctuation changes in §§ 148.415, 148.420, and 148.445. We updated § 148.8 ("Incorporation by Reference") to standardize the format, update addresses, and indicate the specific paragraphs in which the incorporated standards are referenced, give the complete title of the IMO's publication of the IMSBC Code, and specifically note that the supplemental materials included in the IMO publication are not incorporated by this rule.

In § 148.26(b), the NPRM had referred the reader to information required in § 148.90, but § 148.90 does not require any information: we corrected that internal reference to read § 148.60, which is the section that discusses information required to be provided to the master.

In §§ 148.150(d) and 148.265(f), we corrected an error in converting Celsius to Fahrenheit. When referring to a temperature 5 °C above ambient temperature, the proposed rule erroneously gave the Fahrenheit conversion as "5 °C (41 °F)." Although a temperature of 5 °C is equivalent to a temperature of 41 °F, an incremental change of 5 °C is equivalent to a change of 9 °F. A temperature 5 °C above ambient temperature would be 9 °F above ambient temperature, and we have corrected the regulatory text to read "5 °C (9 °F)."

Finally, in § 148.240(m) we corrected two internal paragraph references. The proposed text described frequency of monitoring required by paragraph (l) of this section, which was incorrect because monitoring is required by paragraph (f). Similarly, the proposed § 148.240(m)(3) referred to paragraphs (n)(1) and (n)(2), which was incorrect because there was no proposed paragraph (n); the correct reference is to paragraphs (m)(1) and (m)(2).

VI. Incorporation by Reference

The Director of the Federal Register has approved the material in § 148.8 for incorporation by reference under 5 U.S.C. 552 and 1 CFR part 51. Copies of the material are available from the sources listed in that section.

VII. Regulatory Analyses

We developed this rule after considering numerous statutes and executive orders related to rulemaking. Below we summarize our analyses based on 13 of these statutes or executive orders.

A. Regulatory Planning and Review

Executive Order 12866, "Regulatory Planning and Review," 58 FR 51735, October 4, 1993, requires a determination whether a regulatory action is "significant" and therefore subject to review by OMB and subject to the requirements of the Executive Order. This rulemaking is not significant under Executive Order 12866 and has not been reviewed by OMB.

Public comments on the NPRM are summarized in Part V of this preamble. We received one letter containing two supportive public comments, and have made no changes that would alter our assessment of impacts in the NPRM. We have found no additional data or information that would change our findings in the NPRM. We have adopted the analysis in the NPRM for this rule

as final. A summary of the analysis follows:

The Coast Guard is harmonizing its regulations with recent IMO amendments to Chapter VI and Chapter VII of SOLAS that make the IMSBC Code mandatory for operations involving handling and carriage of solid bulk cargoes by vessel. The amendments require that all vessels subject to SOLAS that carry bulk solid cargoes other than grain comply with the IMSBC Code. This rule also amends the Coast Guard regulations governing the carriage of solid hazardous materials in bulk to allow the use of the IMSBC Code as an equivalent form of compliance. Changes to the Coast Guard regulations also expand the list of solid hazardous materials authorized for bulk transportation by vessel and include special handling procedures based on the IMSBC Code and existing special permits. These changes will reduce the need for the current special permits required for the carriage of certain solid hazardous materials in bulk and may result in a cost savings for industry.

Based on information from the Coast Guard's Marine Information for Safety and Law Enforcement (MISLE) data system, we estimate the rule will affect approximately 115 vessels, consisting of 75 U.S. vessels in coastwise service and 40 U.S. vessels operating under SOLAS that ship hazardous solid cargoes in bulk.

This rule will result in additional equipment, training, and operating costs to industry. We estimate that industry will incur initial (first year) costs and annual recurring costs as a result of this rule. We estimate these costs vary over time and by vessel operations (see the Regulatory Analysis and Initial Regulatory Flexibility Analysis available in the docket for additional details).

Over a 10-year period, we estimate total net present value costs of the rule to be $57.2 million at a 7 percent discount rate. We estimate the annualized costs to be $8.1 million at a 7 percent discount rate.

The benefits of this rule include a reduction in the risks associated with off-gassing and self-heating cargoes. These standards are comprehensive safety requirements that align with international convention (the IMSBC Code, implemented by SOLAS), and are intended to increase information dissemination regarding the safe handling of hazardous cargoes.

These safety standards extend to all U.S.-flagged vessels carrying hazardous bulk solid cargoes. A lack of safe handling of hazardous cargoes, such as coal or wood, can cause combustion of cargoes and the release of gases that could result in the loss of life, injuries, and property damage, among others. The rule will also improve the efficiency of government by reducing the administrative costs associated with special permits.

B. Small Entities

Under the Regulatory Flexibility Act (5 U.S.C. 601–612) (RFA), we have considered whether this rule has a significant economic impact on a substantial number of small entities. The term "small entities" comprises small businesses, not-for-profit organizations that are independently owned and operated and are not dominant in their fields, and governmental jurisdictions with populations of fewer than 50,000.

We prepared an Initial Regulatory Flexibility Analysis (IRFA) for the NPRM that discussed the impacts on small entities (a combined "Regulatory Assessment and Initial Regulatory Flexibility Analysis" report is available in the docket where indicated under **ADDRESSES**). We received no comments on the IRFA. As previously discussed in Part V of this preamble, we received one letter containing two supportive public comments and have made no changes that would alter our assessment of impacts in the NPRM.

Under section 604(a) of the RFA, the Coast Guard prepared this Final Regulatory Flexibility Analysis (FRFA). Section 604(a) of the RFA provides the content of the FRFA, which we discuss below—

(1) A succinct statement of the need for, and objectives of, the rule.

Coast Guard response: We initiated this rulemaking to address international requirements for the carriage of hazardous materials in international maritime commerce, including requirements coming into effect on January 1, 2011, and to alleviate the burden on the public and the Coast Guard caused by the need to maintain special permits for the carriage of 30 solid cargoes not previously included in Coast Guard regulations. In order to address these concerns, this rule implements international requirements, such as requirements that vessels carry oxygen analysis and gas detection equipment, and allows the use of the IMSBC Code as an equivalent form of compliance with domestic regulations. The rule also updates Coast Guard regulations to include cargoes that previously had to be transported under special permit, thereby reducing the burden on the public and on the Coast Guard.

(2) A summary of the significant issues raised by the public comments in response to the IRFA, a summary of the assessment of the agency of such issues, and a statement of any changes made in the proposed rule as a result of such comments.

Coast Guard response: Public comments on the NPRM are summarized in Part V of the Final Rule. We received one letter containing two supportive public comments. We received no public comments on the IRFA and have made no changes that would alter our assessment of impacts in the NPRM. We have found no additional data or information that would change our findings in the NPRM.

(3) A description of and an estimate of the number of small entities to which the rule will apply or an explanation of why no such estimate is available.

Coast Guard response: Based on data from the Coast Guard's Marine Information for Safety and Law Enforcement (MISLE) database and public and proprietary data sources for company revenue and employee size data, we determined that the rule will affect 86 entities that own 115 vessels. We estimate these entities are owners and operators of bulk carriers of hazardous cargo. Based on available data, we did not find evidence that small not-for-profit organizations or small government jurisdictions will be impacted by this rule.

We found revenue and employment information on 33 of the 86 entities. Among these, eight entities are considered small businesses based on the Table of Small Business Size Standards established by the U.S. Small Business Administration (SBA).[1] As discussed in the IRFA, we assume vessels with no available information are also likely to be small entities. Therefore, we estimate about 70 percent of the entities affected by this rule are small entities under SBA size standards.

(4) A description of the projected reporting, recordkeeping and other compliance requirements of the rule, including an estimate of the classes of small entities which will be subject to the requirement and the type of professional skills necessary for preparation of the report or record.

Coast Guard response: Under the provisions of the rule, vessels and barge companies will no longer submit special permit renewal requests to the Coast Guard. Handling requirements related to previously permitted cargoes will be part of 46 CFR part 148. Eliminating these permits will reduce the burden by

[1] *See http://www.sba.gov/idc/groups/public/documents/sba_homepage/serv_sstd_tablepdf.pdf* (Effective August 22, 2008).

reducing the number of respondents, responses, and burden hours associated with permit requests. See the "Collection of Information" section for additional detail on the type of information, respondents and burden associated with documentation provisions of this rule.

(5) A description of the steps the agency has taken to minimize the significant economic impact on small entities consistent with the stated objectives of applicable statutes, including a statement of the factual, policy, and legal reasons for selecting the alternative adopted in the final rule and why each one of the other significant alternatives to the rule considered by the agency which affect the impact on small entities was rejected.

Coast Guard response: We received only one public comment letter, containing two supportive comments on the proposed rule. We have not changed the original provisions or considered additional alternatives for this rule. We considered and evaluated four alternatives in the NPRM (see the "Regulatory Assessment and Initial Regulatory Flexibility Analysis" available in the docket for more detail).

C. Assistance for Small Entities

Under section 213(a) of the Small Business Regulatory Enforcement Fairness Act of 1996 (Pub. L. 104–121), we want to assist small entities in understanding this rule so that they can better evaluate its effects on them and participate in the rule. If the rule affects your small business, organization, or governmental jurisdiction and you have questions concerning its provisions or options for compliance, please contact Richard Bornhorst at the telephone number or e-mail address indicated under the **FOR FURTHER INFORMATION CONTACT** section of this rule. The Coast Guard will not retaliate against small entities that question or complain about this rule or any policy or action of the Coast Guard.

Small businesses may send comments on the actions of Federal employees who enforce or otherwise determine compliance with Federal regulations to the Small Business and Agriculture Regulatory Enforcement Ombudsman and the Regional Small Business Regulatory Fairness Boards. The Ombudsman evaluates these actions annually and rates each agency's responsiveness to small business. If you wish to comment on actions by employees of the Coast Guard, call 1–888–REG–FAIR (1–888–734–3247).

D. Collection of Information

This rule will revise an existing collection of information under the Paperwork Reduction Act of 1995 (44 U.S.C. 3501–3520). As defined in 5 CFR 1320.3(c), "collection of information" comprises reporting, recordkeeping, monitoring, posting, labeling, and other similar actions. The title and description of the information collection, a description of those who must collect the information, and an estimate of the change in annual burden follow. The estimated change covers the time for preparing or renewing special permit requests for hazardous solid bulk cargoes.

Under the provisions of the rule, vessels and barge companies will no longer submit special permit renewal requests to the Coast Guard. Handling requirements related to previously permitted cargoes will be part of 46 CFR part 148. Eliminating these special permits will reduce the burden associated with 1625–0025 by reducing the number of respondents, responses, and burden hours associated with special permit requests.

Title: Carriage of Bulk Solid Materials Requiring Special Handling.

OMB Control Number: 1625–0025.

Summary of the Collection of Information: The U.S. Coast Guard administers and enforces the law, regulations, and international conventions for the safe transportation and stowage of hazardous materials, including bulk solids. Consequently, the Coast Guard is authorized to issue special permits for the handling of hazardous solid bulk cargo as part of its missions to ensure maritime safety and facilitate U.S. commerce. In addition to special permits, this collection of information also authorizes the preparation and display of shipping papers and cargo manifests. However, the rule will change only the burden estimates associated with special permits.

Need for Information: The special permits allow the Coast Guard to regulate the conditions under which shipments of hazardous materials can be made, while giving the shipping industry a greater amount of flexibility than would be afforded without the special permit provision. If the required information were not submitted, the Coast Guard would be unable to issue special permits with adequate precautions for shipping the cargo, and thus could not permit shipment.

Use of Information: The Coast Guard uses this information to make a determination as to the severity of the hazard posed by the material in question. This information allows the Coast Guard to set specific guidelines for safe carriage or, if determined that a material presents too great a hazard, to deny permission for shipping the material.

Description of the Respondents: The respondents are owners and operators of bulk carrier vessels and barges carrying hazardous solid cargo.

Number of Respondents: The existing OMB-approved number of respondents for this collection, including permit requests, shipping papers, and cargo manifest, is 583. We estimate the number of respondents will decrease by seven as the rule eliminates the need for all but one special permit. The total number of respondents will be 576.

Number of Responses: The existing OMB-approved number of responses is 771. The rule will decrease that number by 10. The total number of responses will be 761 per year as a result of a decrease in special permit requests.

Frequency of Response: The rule will not alter the frequency of response for permits that remain active. Since this rule does not impact shipping papers or cargo manifests, frequency of responses for those items remain unchanged.

Burden of Response: The estimated burden for preparation of a permit request remains at 15 hours per permit.

Estimate of Total Annual Burden: This rule will eliminate the need for all but one of the special permits associated with this collection of information. Therefore, the annual burden associated with special permits will decline from 165 hours to 15 hours. The total burden for the collection of information, including cargo manifests and shipping papers, decreases from 895 hours to 745 hours per year.

Reason for Change: The decrease in burden is the result of a program change that eliminates the need for most of the special permits in this collection of information.

As required by the Paperwork Reduction Act of 1995 (44 U.S.C. 3507(d)), we have submitted a copy of this rule to the OMB for its review of the collection of information.

If you submit comments on the collection of information, submit them both to OMB and to the Docket Management Facility where indicated under **ADDRESSES**, by the date under **DATES**.

You need not respond to a collection of information unless it displays a currently valid control number from OMB. Before the requirements for this collection of information become effective, we will publish a notice in the **Federal Register** of OMB's decision to

approve, modify, or disapprove the collection.

E. Federalism

A rule has implications for federalism under Executive Order 13132, Federalism, if it has a substantial direct effect on State or local governments and would either preempt State law or impose a substantial direct cost of compliance on them.

It is well settled that States may not regulate in categories reserved for regulation by the Coast Guard. It is also well settled, now, that all of the categories covered in 46 U.S.C. 3306, 3703, 7101, and 8101 (design, construction, alteration, repair, maintenance, operation, equipping, personnel qualification, and manning of vessels), as well as the reporting of casualties and any other category in which Congress intended the Coast Guard to be the sole source of a vessel's obligations, are within the field foreclosed from regulation by the States. (*See* the decision of the Supreme Court in the consolidated cases of *United States* v. *Locke* and *Intertanko* v. *Locke,* 529 U.S. 89 (March 6, 2000).)

This rule includes requirements under which certain solid materials requiring special handling may be transported in bulk by vessel. The revised regulations apply to all domestic and foreign vessels in the navigable waters of the United States that transport bulk solid materials requiring special handling. The authority to establish such regulations for vessels operating in the navigable waters of the United States has been committed to the Coast Guard by Federal statutes. Furthermore, because vessels tend to move from port to port in the national and international marketplace, the safety standards included in this rule are of national scope to avoid burdensome variances. Therefore the Coast Guard intends this rule to preempt state action addressing the same subject matter.

Because the States may not regulate within this category, preemption considerations set forth in Executive Order 13132 are not applicable.

F. Unfunded Mandates Reform Act

The Unfunded Mandates Reform Act of 1995 (2 U.S.C. 1531–1538) requires Federal agencies to assess the effects of their discretionary regulatory actions. In particular, the Act addresses actions that may result in the expenditure by a State, local, or tribal government, in the aggregate, or by the private sector of $100,000,000 (adjusted for inflation) or more in any one year. Though this rule will not result in such an expenditure, we do discuss the effects of this rule elsewhere in this preamble.

G. Taking of Private Property

This rule will not cause a taking of private property or otherwise have taking implications under Executive Order 12630, Governmental Actions and Interference with Constitutionally Protected Property Rights.

H. Civil Justice Reform

This rule meets applicable standards in sections 3(a) and 3(b)(2) of Executive Order 12988, Civil Justice Reform, to minimize litigation, eliminate ambiguity, and reduce burden.

I. Protection of Children

We have analyzed this rule under Executive Order 13045, Protection of Children from Environmental Health Risks and Safety Risks. This rule is not an economically significant rule and does not create an environmental risk to health or risk to safety that may disproportionately affect children.

J. Indian Tribal Governments

This rule does not have tribal implications under Executive Order 13175, Consultation and Coordination with Indian Tribal Governments, because it does not have a substantial direct effect on one or more Indian tribes, on the relationship between the Federal Government and Indian tribes, or on the distribution of power and responsibilities between the Federal Government and Indian tribes.

K. Energy Effects

We have analyzed this rule under Executive Order 13211, Actions Concerning Regulations That Significantly Affect Energy Supply, Distribution, or Use. We have determined that it is not a "significant energy action" under that order because it is not a "significant regulatory action" under Executive Order 12866 and is not likely to have a significant adverse effect on the supply, distribution, or use of energy. The Administrator of the Office of Information and Regulatory Affairs has not designated it as a significant energy action. Therefore, it does not require a Statement of Energy Effects under Executive Order 13211.

L. Technical Standards

The National Technology Transfer and Advancement Act (NTTAA) (15 U.S.C. 272 note) directs agencies to use voluntary consensus standards in their regulatory activities unless the agency provides Congress, through the Office of Management and Budget, with an explanation of why using these standards would be inconsistent with applicable law or otherwise impractical. Voluntary consensus standards are technical standards (*e.g.,* specifications of materials, performance, design, or operation; test methods; sampling procedures; and related management systems practices) that are developed or adopted by voluntary consensus standards bodies.

This rule incorporates by reference the IMSBC Code, which was developed by the IMO as a voluntary consensus standard, and Recommendations on the Transport of Dangerous Goods, Manual of Tests and Criteria, developed by the United Nations as a voluntary consensus standard. The sections that reference these voluntary consensus standards, and the locations where the standards are available, are listed in 46 CFR 148.8.

M. Environment

We have analyzed this rule under Department of Homeland Security Management Directive 023–01 and Commandant Instruction M16475.lD, which guide the Coast Guard in complying with the National Environmental Policy Act of 1969 (NEPA) (42 U.S.C. 4321–4370f), and have concluded that this action is one of a category of actions that do not individually or cumulatively have a significant effect on the human environment. This rule is categorically excluded under section 2.B.2, figure 2–1, paragraphs (34)(a) and (d) of the Instruction. This rule involves regulations which are editorial or procedural and regulations concerning manning, documentation, admeasurement, inspection and equipping of vessels. An environmental analysis checklist and a categorical exclusion determination are available in the docket where indicated under **ADDRESSES**.

List of Subjects

46 CFR Part 97

Cargo vessels, Marine safety, Navigation (water), Reporting and recordkeeping requirements.

46 CFR Part 148

Cargo vessels, Hazardous materials transportation, Marine safety, Incorporation by reference.

■ For the reasons discussed in the preamble, the Coast Guard amends 46 CFR parts 97 and 148 as follows:

PART 97—OPERATIONS

■ 1. The authority citation for Part 97 is revised to read as follows:

Authority: 33 U.S.C. 1321(j); 46 U.S.C. 2103, 3306, 5111, 6101; 49 U.S.C. 5103, 5106; E.O. 12234, 45 FR 58801, 3 CFR, 1980 Comp., p. 277; E.O. 12777, 56 FR 54757; 3 CFR, 1991 Comp., p. 351; Department of Homeland Security Delegation No. 0170.1.

■ 2. Revise Subpart 97.12, consisting of §§ 97.12–1 through 97.12–5, to read as follows:

Subpart 97.12—Bulk Solid Cargoes

Sec.
97.12–1 Definition of a bulk solid cargo.
97.12–3 Guidance for the master.
97.12–5 Bulk solid cargoes that may liquefy.

§ 97.12–1 Definition of a bulk solid cargo.

(a) A bulk solid cargo—

(1) Consists of particles, granules, or larger pieces of material generally uniform in composition;

(2) Is not grain; and

(3) Is loaded directly into a vessel's cargo space with no intermediate form of containment.

(b) Additional requirements for bulk solid materials needing special handling are contained in Part 148 of this chapter.

§ 97.12–3 Guidance for the master.

(a) The owner or operator of a vessel must provide the master with safe loading and stowage information for each bulk solid cargo that vessel will carry.

(b) The shipper of a bulk solid cargo, as defined in § 148.3 of this chapter, must provide the master of a vessel with information regarding the nature of the cargo in advance of loading operations. Additional requirements in § 148.60 of this chapter may also apply.

§ 97.12–5 Bulk solid cargoes that may liquefy.

If the information provided in § 97.12–3(a) or (b) indicates that the bulk solid cargo to be carried is prone to liquefy during carriage, due to small particle sizes and moisture content, then the requirements contained in § 148.450 of this chapter apply.

■ 3. Revise § 97.55–1 to read as follows:

§ 97.55–1 Master's responsibility.

Before loading bulk grain or any bulk solid cargo to which § 148.435 of this chapter applies, the master shall have the lighting circuits to cargo compartments in which the grain or bulk solid cargo is to be loaded de-energized at the distribution panel or panel board. He shall thereafter have periodic inspections made of the panel or panel board as frequently as necessary to ascertain that the affected circuits remain de-energized while this bulk cargo remains within the vessel.

■ 4. Revise Part 148 to read as follows:

PART 148—CARRIAGE OF BULK SOLID MATERIALS THAT REQUIRE SPECIAL HANDLING

Subpart A—General

Sec.
148.1 Purpose and applicability.
148.2 Responsibility and compliance.
148.3 Definitions.
148.5 Alternative procedures.
148.7 OMB control numbers assigned under the Paperwork Reduction Act.
148.8 Incorporation by reference.
148.9 Right of appeal.
148.10 Permitted materials.
148.11 Hazardous or potentially dangerous characteristics.
148.12 Assignment and certification.

Subpart B—Special Permits

148.15 Petition for a special permit.
148.20 Deadlines for submission of petition and related requests.
148.21 Necessary information.
148.25 Activities covered by a special permit.
148.26 Standard conditions for special permits.
148.30 Records of special permits issued.

Subpart C—Minimum Transportation Requirements

148.50 Cargoes subject to this subpart.
148.51 Temperature readings.
148.55 International shipments.
148.60 Shipping papers.
148.61 Emergency response information.
148.62 Location of shipping papers and emergency response information.
148.70 Dangerous cargo manifest; general.
148.71 Information included in the dangerous cargo manifest.
148.72 Dangerous cargo manifest; exceptions.
148.80 Supervision of cargo transfer.
148.85 Required equipment for confined spaces.
148.86 Confined space entry.
148.90 Preparations before loading.
148.100 Log book entries.
148.110 Procedures followed after unloading.
148.115 Report of incidents.

Subpart D—Stowage and Segregation

148.120 Stowage and segregation requirements.
148.125 Stowage and segregation for materials of Class 4.1.
148.130 Stowage and segregation for materials of Class 4.2.
148.135 Stowage and segregation for materials of Class 4.3.
148.140 Stowage and segregation for materials of Class 5.1.
148.145 Stowage and segregation for materials of Class 7.
148.150 Stowage and segregation for materials of Class 9.
148.155 Stowage and segregation for potentially dangerous materials.

Subpart E—Special Requirements for Certain Materials

148.200 Purpose.
148.205 Ammonium nitrate and ammonium nitrate fertilizers.
148.220 Ammonium nitrate-phosphate fertilizers.
148.225 Calcined pyrites (pyritic ash, fly ash).
148.227 Calcium nitrate fertilizers.
148.230 Calcium oxide (lime, unslaked).
148.235 Castor beans.
148.240 Coal.
148.242 Copra.
148.245 Direct reduced iron (DRI); lumps, pellets, and cold-molded briquettes.
148.250 Direct reduced iron (DRI); hot-molded briquettes.
148.255 Ferrosilicon, aluminum ferrosilicon, and aluminum silicon containing more than 30% but less than 90% silicon.
148.260 Ferrous metal.
148.265 Fish meal or fish scrap.
148.270 Hazardous substances.
148.275 Iron oxide, spent; iron sponge, spent.
148.280 Magnesia, unslaked (lightburned magnesia, calcined magnesite, caustic calcined magnesite).
148.285 Metal sulfide concentrates.
148.290 Peat moss.
148.295 Petroleum coke, calcined or uncalcined, at 55 °C (131 °F) or above.
148.300 Radioactive materials.
148.310 Seed cake.
148.315 Sulfur.
148.320 Tankage; garbage tankage; rough ammonia tankage; or tankage fertilizer.
148.325 Wood chips; wood pellets; wood pulp pellets.
148.330 Zinc ashes; zinc dross; zinc residues; zinc skimmings.

Subpart F—Additional Special Requirements

148.400 Applicability.
148.405 Sources of ignition.
148.407 Smoking.
148.410 Fire hoses.
148.415 Toxic gas analyzers.
148.420 Flammable gas analyzers.
148.435 Electrical circuits in cargo holds.
148.445 Adjacent spaces.
148.450 Cargoes subject to liquefaction.

Authority: 33 U.S.C. 1602; E.O. 12234, 45 FR 58801, 3 CFR, 1980 Comp., p. 277; 46 U.S.C. 3306, 5111; 49 U.S.C. 5103; Department of Homeland Security Delegation No. 0170.1.

Subpart A—General

§ 148.1 Purpose and applicability.

(a) This part prescribes special handling procedures for certain solid materials that present hazards when transported in bulk by vessel.

(b) Except as noted in paragraph (c) of this section, this part applies to all domestic and foreign vessels in the navigable waters of the United States that transport bulk solid materials requiring special handling.

(c) This part does not apply to an unmanned barge on a domestic voyage carrying a Potentially Dangerous

Material (PDM) found in Table 148.10 of this part. All barges on international voyages must follow the requirements for PDM.

(d) The regulations in this part have preemptive impact over State law on the same subject. The Coast Guard has determined, after considering the factors developed by the Supreme Court in *U.S.* v. *Locke,* 529 U.S. 89 (2000), that in directing the Secretary to regulate the safe transportation of hazardous material and the safety of individuals and property on board vessels subject to inspection, as well as the provision of loading information, Congress intended to preempt the field of safety standards for solid materials requiring special handling when transported in bulk on vessels.

§ 148.2 Responsibility and compliance.

Each master of a vessel, person in charge of a barge, owner, operator, shipper, charterer, or agent must ensure compliance with this part. These persons are also responsible for communicating requirements to every person performing any function covered by this part.

§ 148.3 Definitions.

As used in this part—

A–60 class division means a division as defined in § 32.57–5 of this chapter.

Adjacent space means any enclosed space on a vessel, such as a cargo hold, cargo compartment, accommodation space, working space, storeroom, passageway, or tunnel, that shares a common bulkhead or deck with a hatch, door, scuttle, cable fitting or other penetration, with a cargo hold or compartment containing a material listed in Table 148.10 of this part.

Away from means a horizontal separation of at least 3 meters (10 feet) projected vertically is maintained between incompatible materials carried in the same hold or on deck.

Bulk applies to any solid material, consisting of a combination of particles, granules, or any larger pieces of material generally uniform in composition, that is loaded directly into the cargo spaces of a vessel without any intermediate form of containment.

Bulk Cargo Shipping Name or *BCSN* identifies a bulk solid material during transport by sea. When a cargo is listed in this Part, the BCSN of the cargo is identified by Roman type and is listed in Column 1 of Table 148.10 of this part. When the cargo is a hazardous material, as defined in 49 CFR part 173, the proper shipping name of that material is the BCSN.

Cold-molded briquettes are briquettes of direct reduced iron (DRI) that have been molded at a temperature of under 650 ° C (1,202 °F) or that have a density of under 5.0 g/cm^3.

Commandant (CG–5223) means the Chief, Hazardous Materials Standards Division of the Office of Operating and Environmental Standards, United States Coast Guard, 2100 2nd St., SW., Stop 7126, Washington, DC 20593–7126. CG–5223 can be contacted at 202–372–1420 or *Hazmat@comdt.uscg.mil.*

Compartment means any space on a vessel that is enclosed by the vessel's decks and its sides or permanent steel bulkheads.

Competent authority means a national agency responsible under its national law for the control or regulation of a particular aspect of the transportation of hazardous materials.

Confined space means a cargo hold containing a material listed in Table 148.10 of this part or an adjacent space not designed for human occupancy.

Domestic voyage means transportation between places within the United States other than through a foreign country.

Hazard class means the category of hazard assigned to a material under this part and 49 CFR parts 171 through 173.

Hazard Class Definitions

HAZARD CLASSES USED IN THIS PART ARE DEFINED IN THE FOLLOWING SECTIONS OF TITLE 49

Class No.	Division No. (if any)	Description	Reference (49 CFR)
1	1.1, 1.2, 1.3, 1.4, 1.5, 1.6	Explosives	§ 173.50
2	2.1, 2.2, 2.3	Flammable Gas, Non-Flammable Compressed Gas, Poisonous Gas	§ 173.115
3		Flammable and Combustible Liquid	§ 173.120
4	4.1, 4.2, 4.3	Flammable Solid, Spontaneously Combustible Material, Dangerous When Wet Material.	§ 173.124
5	5.1	Oxidizer	§ 173.127
5	5.2	Organic Peroxide	§ 173.128
6	6.1	Poisonous Materials	§ 173.132
6	6.2	Infectious Substance	§ 173.134
7		Radioactive Material	§ 173.403
8		Corrosive Material	§ 173.136
9		Miscellaneous Hazardous Material	§ 173.140

Hazardous substance is a hazardous substance as defined in 49 CFR 171.8.

Hold means a compartment below deck that is used exclusively for the stowage of cargo.

Hot-molded briquettes are briquettes of DRI that have been molded at a temperature of 650 °C (1,202 °F) or higher, and that have a density of 5.0 g/cm^3 (312 lb/ft^3) or greater.

IMSBC Code means the English version of the "International Maritime Solid Bulk Cargoes Code" published by the International Maritime Organization (incorporated by reference, see § 148.8).

Incompatible materials means two materials whose stowage together may result in undue hazards in the case of leakage, spillage, or other accident.

International voyage means voyages—

(1) Between any place in the United States and any place in a foreign country;

(2) Between places in the United States through a foreign country; or

(3) Between places in one or more foreign countries through the United States.

Lower flammability limit or *LFL* means the lowest concentration of a material or gas that will propagate a flame. The LFL is usually expressed as a percent by volume of a material or gas in air.

Master means the officer having command of a vessel. The functions assigned to the master in this part may also be performed by a representative of the master or by a person in charge of a barge.

Material safety data sheet or *MSDS* is as defined in 29 CFR 1910.1200.

Person in charge of a barge means an individual designated by the owner or operator of a barge to have charge of the barge.

Potentially Dangerous Material or *PDM* means a material that does not fall into a particular hazard class but can present a danger when carried in bulk aboard a vessel. The dangers often result from the material's tendency to self-heat or cause oxygen depletion. Materials that present a potential danger due solely to their tendency to shift in the cargo hold are not PDMs. For international shipments prepared in accordance with the IMSBC Code (incorporated by reference, see § 148.8), equivalent terminology to PDM is Material Hazardous only in Bulk (MHB).

Readily combustible material means a material that may not be a hazardous material but that can easily ignite and support combustion. Examples are wood, straw, vegetable fibers, and products made from these materials, and coal lubricants and oils. The term does not include packaging material or dunnage.

Reportable quantity or *RQ* means the quantity of a hazardous substance spilled or released that requires a report to the National Response Center. The specific RQs for each hazardous substance are available in 49 CFR 172.101, Appendix A.

Responsible person means a knowledgeable person who the master of a vessel or owner or operator of a barge makes responsible for all decisions relating to his or her specific task.

Seed cake means the residue remaining after vegetable oil has been extracted by a solvent or mechanical process from oil-bearing seeds, such as coconuts, cotton seed, peanuts, and linseed.

Shipper means any person by whom, or in whose name, or on whose behalf, a contract of carriage of goods by sea has been concluded with a carrier; or any person by whom or in whose name, or on whose behalf, the goods are actually delivered to the carrier in relation to the contract of carriage by sea.

Shipping paper means a shipping order, bill of lading, manifest, or other shipping document serving a similar purpose.

Stowage factor means the volume in cubic meters of 1,000 kilograms (0.984 long tons) of a bulk solid material.

Threshold limit value or *TLV* means the time-weighted average concentration of a material that the average worker can be exposed to over a normal eight-hour working day, day after day, without adverse effect. This is a trademark term of the American Conference of Governmental Industrial Hygienists (ACGIH).

Transported includes the various operations associated with cargo transportation, such as loading, off-loading, handling, stowing, carrying, and conveying.

Trimming means any leveling of a cargo within a cargo hold or compartment, either partial or total.

Tripartite agreement means an agreement between the national administrations of the port of loading, the port of discharge, and the flag state of the vessel, on the conditions of carriage of a cargo.

Ventilation means exchange of air from outside to inside a cargo space and includes the following types:

(1) *Continuous ventilation* means ventilation that is operating at all times. Continuous ventilation may be either natural or mechanical;

(2) *Mechanical ventilation* means power-generated ventilation;

(3) *Natural ventilation* means ventilation that is not power-generated; and

(4) *Surface ventilation* means ventilation of the space above the cargo. Surface ventilation may be either natural or mechanical.

Vessel means a cargo ship or barge.

§ 148.5 Alternative procedures.

(a) The Commandant (CG–5223) may authorize the use of an alternative procedure, including exemptions to the IMSBC Code (incorporated by reference, see § 148.8), in place of any requirement of this part if it is demonstrated to the satisfaction of the Coast Guard that the requirement is impracticable or unnecessary and that an equivalent level of safety can be maintained.

(b) Each request for authorization of an alternative procedure must—

(1) Be in writing;

(2) Name the requirement for which the alternative is requested; and

(3) Contain a detailed explanation of—

(i) Why the requirement is impractical or unnecessary; and

(ii) How an equivalent level of safety will be maintained.

§ 148.7 OMB control numbers assigned under the Paperwork Reduction Act.

The information collection requirements in this part are approved by the Office of Management and Budget, and assigned OMB control number 1625–0025.

§ 148.8 Incorporation by reference.

(a) Certain material is incorporated by reference into this part with the approval of the Director of the Federal Register under 5 U.S.C. 552(a) and 1 CFR part 51. To enforce any edition other than that specified in this section, the Coast Guard must publish notice of change in the **Federal Register** and the material must be available to the public. All approved material is available for inspection at the National Archives and Records Administration (NARA). For information on the availability of this material at NARA, call 202–741–6030 or go to *http://www.archives.gov/federal_register/code_of_federal_regulations/ibr_locations.html.* Also, it is available for inspection at the U.S. Coast Guard Hazardous Materials Standards Division (CG–5223), 2100 2nd St., SW., Stop 7126, Washington, DC 20593–7126, and is available from the sources listed below.

(b) International Maritime Organization (IMO), 4 Albert Embankment, London SE1 7SR, United Kingdom, +44 (0)20 7735 7611, *http://www.imo.org.*

(1) International Maritime Solid Bulk Cargoes Code and Supplement, 2009 edition ("IMSBC Code"), incorporation by reference, excluding supplemental materials, approved for §§ 148.3; 148.5(a); 148.15(d); 148.55(b); 148.205(b); 148.220(b) and (c); 148.240(h); 148.450(a), (d), and (g).

(2) [Reserved]

(c) United Nations Publications, 2 United Nations Plaza, Room DC2–853, Dept. C089, New York, NY 10017, (800) 253–9646, *http://unp.un.org.*

(1) Recommendations on the Transport of Dangerous Goods, Manual of Tests and Criteria, Fifth revised edition (2009) ("UN Manual of Tests and Criteria"), incorporation by reference approved for §§ 148.205(b); 148.220(b) and (c).

(2) [Reserved]

§ 148.9 Right of appeal.

Any person directly affected by enforcement of this part by or on behalf of the Coast Guard may appeal the decision or action under Subpart 1.03 of this chapter.

§ 148.10 Permitted materials.

(a) A material listed in Table 148.10 of this section may be transported as a bulk solid cargo on a vessel if it is carried according to this part. A material that is not listed in Table 148.10 of this section, but which is hazardous or a Potentially Dangerous Material (PDM), requires a Special Permit under § 148.15 of this part to be transported on the navigable waters of the United States.

(b) For each listed material, Table 148.10 identifies the hazard class and gives the BCSN or directs the user to the preferred BCSN. In addition, the table lists specific hazardous or potentially dangerous characteristics associated with each material and specifies or references detailed special requirements

in this part pertaining to the stowage or transport of specific bulk solid materials. The column descriptions for Table 148.10 are defined as follows:

(1) *Column 1: Bulk Solid Material Descriptions and Bulk Cargo Shipping Names (BCSN).* Column 1 lists the bulk solid material descriptions and the BCSNs of materials designated as hazardous or PDM. BCSNs are limited to those shown in Roman type. Trade names and additional descriptive text are shown in italics.

(2) *Column 2: I.D. Number.* Column 2 lists the identification number assigned to each BCSN associated with a hazardous material. Those preceded by the letters "UN" are associated with BCSNs considered appropriate for international voyages as well as domestic voyages. Those preceded by the letters "NA" are associated with BCSNs not recognized for international voyages, except to and from Canada.

(3) *Column 3: Hazard Class or Division.* Column 3 designates the hazard class or division, or PDM, as appropriate, corresponding to each BCSN.

(4) *Column 4: References.* Column 4 refers the user to the preferred BCSN corresponding to bulk solid material descriptions listed in Column 1.

(5) *Column 5: Hazardous or Potentially Dangerous Characteristics.* Column 5 specifies codes for hazardous or potentially dangerous characteristics applicable to specific hazardous materials or PDMs. Refer to § 148.11 of this part for the meaning of each code.

(6) *Column 6: Other Characteristics.* Column 6 contains other pertinent characteristics applicable to specific bulk solid materials listed in Column 1.

(7) *Column 7: Special Requirements.* Column 7 specifies the applicable sections of Part 148 of this chapter that contain detailed special requirements pertaining to stowage and/or transportation of specific bulk solid materials in this part. This column is completed in a manner which indicates that "§ 148." precedes the designated numerical entry.

(c) The following requirements apply to combinations of bulk solids carried at the same time and in the same compartment or hold:

Combinations of bulk solid materials	*Requirements*
(1) Material listed in Table 148.10 carried with any other non-hazardous bulk solid material.	Requirements specified in Table 148.10 for the listed material.
(2) Material carried under Special Permit with any non-hazardous bulk solid material.	Requirements specified in the Special Permit.
(3) Two or more materials listed in Table 148.10	Must apply for a Special Permit.

(d) An owner, agent, master, operator, or person in charge of a vessel or barge carrying materials listed in Table 148.10 of this section must follow the requirements contained in 46 CFR part 4 for providing notice and reporting of marine casualties and retaining voyage records.

TABLE 148.10—BULK SOLID HAZARDOUS MATERIALS TABLE

Bulk solid material descriptions and bulk cargo shipping names	I.D. No.	Hazard class or division	References	Hazardous or potentially dangerous characteristics (see § 148.11)	Other characteristics	Special requirements (§ 148.* * *)
(1)	(2)	(3)	(4)	(5)	(6)	(7)
Aluminum Ferrosilicon Powder ...	UN1395	4.3, 6.1	.....	2, 3	Fine powder or briquettes	135, 255, 405(b), 407, 415(a) & (e), 420(b), 445
Aluminum Nitrate	UN1438	5.1	.....	4	Colorless or white crystals.	140
Aluminum Silicon Powder, Uncoated.	UN1398	4.3	.....	2, 3	.....	135, 255, 405(b), 407 415(a) & (e), 420(b), 445
Aluminum Smelting By-products or Aluminum Re-melting By-products.	UN3170	4.3	.....	1, 2, 3	Includes aluminum dross, residues, spent cathodes, spent potliner, and skimmings.	135, 405(b), 420(b), 445
Ammonium Nitrate	UN1942	5.1	.....	5, 27	.....	140, 205, 405(a), 407, 410
Ammonium Nitrate Based Fertilizer.	UN2067	5.1	.....	5, 27	.....	140, 205, 405(a), 407, 410
Ammonium Nitrate Based Fertilizer.	UN2071	9	.....	6	Nitrogen, Phosphate, or Potash.	140, 220, 405(a), 407
Barium Nitrate	UN1466	5.1, 6.1	.....	4, 7	.....	140
Brown Coal Briquettes	.....	PDM	.....	11, 12, 14, 25	.....	155, 240, 405(b), 407, 415(b), 420(a), 445
Calcium fluoride	.....	.....	*See Fluorospar.*	.....	.....	.....
Calcium Nitrate	UN1454	5.1	.....	4	White crystals or powder	140, 227

TABLE 148.10—BULK SOLID HAZARDOUS MATERIALS TABLE—Continued

Bulk solid material descriptions and bulk cargo shipping names	I.D. No.	Hazard class or division	References	Hazardous or potentially dangerous characteristics (see § 148.11)	Other characteristics	Special requirements (§ 148.* * *)
(1)	(2)	(3)	(4)	(5)	(6)	(7)
Calcium Oxide			*See* Lime, Unslaked.			
Castor Beans	UN2969	9		10	Whole beans	150, 235
Charcoal		PDM		1, 11, 12	Screenings, briquettes	155
Chili Saltpeter			*See* Sodium Nitrate.			
Chilean Natural Nitrate			*See* Sodium Nitrate.			
Coal		PDM		11, 12, 13, 14, 25		155, 240, 405(b), 407, 415(b), 420(a) & (c), 445, 450
Copra	UN1363	4.2		11, 12	Dry	130, 242
Direct reduced iron (A) *with not more than 5% fines.*		PDM		1, 2, 12	Hot-molded briquettes	155, 250, 420(b)
Direct reduced iron (B) *with not more than 5% fines.*		PDM		1, 2, 12	Lumps, pellets, and cold-molded briquettes.	155, 245, 405(b), 407, 420(b), 445
Environmentally Hazardous Substances, Solid, n.o.s..	UN3077	9	Hazardous substances listed in 40 CFR part 302.	15		150, 270
Ferrophosphorous		PDM		2, 3	Including briquettes	155, 415(e), 445
Ferrosilicon with *30–90% silicon*	UN1408	4.3, 6.1		2, 3		135, 255, 405(b), 407, 415(a) & (e), 420(b), 445
Ferrosilicon *with 25%–30% silicon or 90% or more silicon.*		PDM				155, 255, 405(b), 407, 415 (a) & (e), 420(b), 445
Ferrous Sulfate			See Environmentally Hazardous Substances, Solid, n.o.s.			
Ferrous Metal Borings, Shavings, Turnings, or Cuttings.	UN2793	4.2		11, 12		130, 260
Fish Meal Stabilized or Fish Scrap, Stabilized.	UN2216	9		11, 12	Ground and pelletized (mixture), anti-oxidant treated.	150, 265
Fluorospar		PDM		8, 24		155, 440(a), 450
Garbage Tankage			*See* Tankage			
Iron Oxide, Spent or Iron Sponge, Spent.	UN1376	4.2		3, 11, 12, 14		130, 275, 415(c), (d) & (f), 445
Iron Swarf			*See* Ferrous Metal Borings, Shavings, Turnings, or Cuttings.			
Lead Nitrate	UN1469	5.1, 6.1		4, 7, 22, 26		140, 270
Lignite			*See* Brown Coal Briquettes.			
Lime, Unslaked		PDM		1		155, 230
Linted Cotton Seed *containing not more than 9% moisture and not more than 20.5% oil.*		PDM		11, 12		155
Magnesia, Unslaked		PDM		1	Lightburned magnesia, calcined magnesite.	155, 280
Magnesium Nitrate	UN1474	5.1		4		140

TABLE 148.10—BULK SOLID HAZARDOUS MATERIALS TABLE—Continued

Bulk solid material descriptions and bulk cargo shipping names	I.D. No.	Hazard class or division	References	Hazardous or potentially dangerous characteristics (see § 148.11)	Other characteristics	Special requirements (§ 148.* * *)
(1)	(2)	(3)	(4)	(5)	(6)	(7)
Metal Sulfide Concentrates	.....	PDM	.....	8, 11, 12, 22, 24	Solid, finely divided sulfide concentrates of copper, iron, lead, nickel, zinc, or other metalliferous ores.	155, 285, 450
Peat Moss *with moisture content of more than 65% by weight.*	.....	PDM	.....	8, 12, 13, 14, 24	Fine to coarse fibrous structure.	155, 290, 450
Pencil Pitch	.....	.....	*See* Pitch Prill	.....	.....	.....
Petroleum Coke *calcined or uncalcined at > 55 °C (131 °F).*	.....	PDM	.....	11	.....	155, 295
Pitch Prill	.....	PDM	.....	14, 16	.....	155
Potassium Nitrate	UN1486	5.1	.....	4	.....	140
Prilled Coal Tar	.....	.....	*See* Pitch Prill	.....	.....	.....
Pyrites, Calcined	.....	PDM	.....	8, 9, 24	Fly ash	155, 225, 450
Pyritic ash	.....	.....	*See* Pyrites, Calcined.	.....	.....	.....
Quicklime	.....	.....	*See* Lime, Unslaked.	.....	.....	.....
Radioactive Material	UN2912	7	.....	17	Low specific activity	145, 300
Radioactive Material	UN2913	7	.....	17	Surface contaminated objects.	145, 300
Rough Ammonia Tankage	.....	.....	*See* Tankage	.....	.....	.....
Saltpeter	.....	.....	*See* Potassium Nitrate.	.....	.....	.....
Sawdust	.....	PDM	.....	12, 18	.....	155, 405(a), 407
Seed Cake	UN1386	4.2	.....	12, 19	Mechanically expelled or solvent extractions.	130, 310
Seed Cake	UN2217	4.2	.....	12, 19	Solvent extractions	130, 310
Silicomanganese *with silicon content of 25% or more.*	.....	PDM	.....	2, 3, 12	With known hazard profile or known to evolve gases.	155, 405(b), 407, 415(a) & (d), 420(b), 445
Sodium Nitrate	UN1498	5.1	.....	4	.....	140
Sodium Nitrate and Potassium Nitrate Mixture.	UN1499	5.1	.....	4	Mixtures prepared as fertilizer.	140
Steel Swarf	.....	.....	*See* Ferrous Metal Borings, Shavings, Turnings, or Cuttings.	.....	.....	.....
Sulfur	UN1350	4.1	.....	14, 20	Lumps or coarse-grained powder.	125, 315, 405(a), 407, 435
Sulfur	NA1350	9	.....	14, 20	Not subject to the requirements of this subchapter when formed into specific shapes (i.e., prills, granules, pellets, pastiles, or flakes).	125, 315, 405(a), 407, 435
Tankage	.....	PDM	.....	11	.....	155, 320
Tankage Fertilizer	.....	.....	*See* Tankage	.....	.....	.....
Vanadium Ore	.....	PDM	.....	21	.....	155
Wood chips, Wood Pellets, Wood Pulp Pellets.	.....	PDM	.....	12	.....	155, 325
Zinc Ashes	UN1435	4.3	.....	2, 3, 23	Includes zinc dross, residues, and skimmings.	135, 330, 405(b), 407, 420(b), 435, 445

§ 148.11 Hazardous or potentially dangerous characteristics.

(a) General. When Column 5 refers to a code for a hazardous material or PDM, the meaning of that code is set forth in this section.

(b) Table of Hazardous or Potentially Dangerous Characteristics.

Code	Hazardous or potentially dangerous characteristic
1	Contact with water may cause heating.
2	Contact with water may cause evolution of flammable gases, which may form explosive mixtures with air.
3	Contact with water may cause evolution of toxic gases.
4	If involved in a fire, will greatly intensify the burning of combustible materials.
5	A major fire aboard a vessel carrying this material may involve a risk of explosion in the event of contamination (*e.g.,* by a fuel oil) or strong confinement. If heated strongly will decompose, giving off toxic gases that support combustion.
6	These mixtures may be subject to self-sustaining decomposition if heated. Decomposition, once initiated, may spread throughout the remainder, producing gases that are toxic.
7	Toxic if swallowed and by dust inhalation.
8	Harmful and irritating by dust inhalation.
9	Highly corrosive to steel.
10	Powerful allergen. Toxic by ingestion. Skin contact or inhalation of dust may cause severe irritation of skin, eyes, and mucous membranes in some people.
11	May be susceptible to spontaneous heating and ignition.
12	Liable to cause oxygen depletion in the cargo space.
13	Liable to emit methane gas which can form explosive mixtures with air.
14	Dust forms explosive mixtures with air.
15	May present substantial danger to the public health or welfare or the environment when released into the environment. Skin contact and dust inhalation should be avoided.
16	Combustible. Burns with dense black smoke. Dust may cause skin and eye irritation.
17	Radiation hazard from dust inhalation and contact with mucous membranes.
18	Susceptible to fire from sparks and open flames.
19	May self-heat slowly and, if wet or containing an excessive proportion of unoxidized oil, ignite spontaneously.
20	Fire may produce irritating or poisonous gases.
21	Dust may contain toxic constituents.
22	Lead nitrate and lead sulfide are hazardous substances; see code 15 of this table and § 148.270.
23	Hazardous substance when consisting of pieces having a diameter less than 100 micrometers (0.004 in.); see code 15 of this table and § 148.270.
24	Cargo subject to liquefaction.
25	Subject to liquefaction if average particle size of cargo is less than 10 mm (.394 in.).
26	This entry is considered a Marine Pollutant in accordance with 49 CFR 172.101 Appendix B.
27	This entry is considered a certain dangerous cargo in accordance with 33 CFR 160.204.

§ 148.12 Assignment and certification.

(a) The National Cargo Bureau is authorized to assist the Coast Guard in administering the provisions of this part by—

(1) Inspecting vessels for suitability for loading solid materials in bulk;

(2) Examining stowage of solid materials loaded in bulk on board vessels;

(3) Making recommendations on stowage requirements applicable to the transportation of solid materials in bulk; and

(4) Issuing certificates of loading that verify stowage of the solid material in bulk meets requirements of this part.

(b) Certificates of loading from the National Cargo Bureau are accepted as evidence of compliance with bulk solid transport regulations.

Subpart B—Special Permits

§ 148.15 Petition for a special permit.

(a) Each shipper who wishes to ship a bulk solid material not listed in Table 148.10 of this part must determine whether the material meets the definition of any hazard class, or the definition of a PDM, as those terms are defined in § 148.3 of this part.

(b) If the material meets any of the definitions described in paragraph (a) of this section, the shipper then must submit a petition in writing to the Commandant (CG–5223) for authorization to ship any hazardous material or PDM not listed in Table 148.10 of this part.

(c) If the Commandant (CG–5223) approves a petition for authorization, the Commandant (CG–5223) issues the petitioner a Coast Guard special permit. The permit allows the material to be transported in bulk by vessel and outlines requirements for this transport.

(d) A tripartite agreement developed in conjunction with the United States and in accordance with the IMSBC Code (incorporated by reference, see § 148.8) may be used in lieu of a special permit.

§ 148.20 Deadlines for submission of petition and related requests.

(a) A petition for a special permit must be submitted at least 45 days before the requested effective date. Requests for extension or renewal of an existing special permit must be submitted 20 days before the date of expiration.

(b) Requests for extension or renewal must include the information required under § 148.21(a), (f), and (g) of this part.

§ 148.21 Necessary information.

Each petition for a special permit must contain at least the following:

(a) A description of the material, including, if a hazardous material—

(1) The proper shipping name from the table in 49 CFR 172.101;

(2) The hazard class and division of the material; and

(3) The identification number of the material.

(b) A material safety data sheet (MSDS) for the material or—

(1) The chemical name and any trade names or common names of the material;

(2) The composition of the material, including the weight percent of each constituent;

(3) Physical data, including color, odor, appearance, melting point, and solubility;

(4) Fire and explosion data, including auto-ignition temperature, any unusual

fire or explosion hazards, and any special fire fighting procedures;

(5) Health hazards, including any dust inhalation hazards and any chronic health effects;

(6) The threshold limit value (TLV) of the material or its major constituents, if available, and any relevant toxicity data;

(7) Reactivity data, including any hazardous decomposition products and any incompatible materials; and

(8) Special protection information, including ventilation requirements and personal protection equipment required.

(c) Other potentially dangerous characteristics of the material not covered by paragraph (b) of this section, including—

(1) Self-heating;

(2) Depletion of oxygen in the cargo space;

(3) Dust explosion; and

(4) Liquefaction.

(d) A detailed description of the proposed transportation operation, including—

(1) The type of vessel proposed for water movements;

(2) The expected loading and discharge ports, if known;

(3) Procedures to be used for loading and unloading the material;

(4) Precautions to be taken when handling the material; and

(5) The expected temperature of the material at the time it will be loaded on the vessel.

(e) Test results (if required under Subpart E of this part).

(f) Previous approvals or permits.

(g) Any relevant shipping or accident experience (or any other relevant transportation history by any mode of transport).

§ 148.25 Activities covered by a special permit.

(a) Each special permit covers any shipment of the permitted material by the shipper and also covers for each shipment—

(1) Each transfer operation;

(2) Each vessel involved in the shipment; and

(3) Each individual involved in any cargo handling operation.

(b) Each special permit is valid for a period determined by the Commandant (CG–5223) and specified in the special permit. The period will not exceed 4 years and is subject to suspension or revocation before its expiration date.

§ 148.26 Standard conditions for special permits.

(a) Each special permit holder must comply with all the requirements of this part unless specifically exempted by the terms of the special permit.

(b) Each special permit holder must provide a copy of the special permit and the information required in § 148.60 of this part to the master or person in charge of each vessel carrying the material.

(c) The master of a vessel transporting a special permit material must ensure that a copy of the special permit is on board the vessel. The special permit must be kept with the dangerous cargo manifest if such a manifest is required by § 148.70 of this part.

(d) The person in charge of a barge transporting any special permit material must ensure that a copy of the special permit is on board the tug or towing vessel. When the barge is moored, the special permit must be kept on the barge with the shipping papers as prescribed in § 148.62 of this part.

§ 148.30 Records of special permits issued.

A list of all special permits issued, and copies of each, are available from the Commandant (CG–5223).

Subpart C—Minimum Transportation Requirements

§ 148.50 Cargoes subject to this subpart.

The regulations in this subpart apply to each bulk shipment of—

(a) A material listed in Table 148.10 of this part; and

(b) Any solid material shipped under the terms of a Coast Guard special permit.

§ 148.51 Temperature readings.

When Subpart D of this part sets a temperature limit for loading or transporting a material, apply the following rules:

(a) The temperature of the material must be measured 20 to 36 centimeters (8 to 14 inches) below the surface at 3 meter (10 foot) intervals over the length and width of the stockpile or cargo hold.

(b) The temperature must be measured at every spot in the stockpile or cargo hold that shows evidence of heating.

(c) Before loading or transporting the material, all temperatures measured must be below the temperature limit set in Subpart D of this part.

§ 148.55 International shipments.

(a) *Importer's responsibility.* Each person importing any bulk solid material requiring special handling into the United States must provide the shipper and the forwarding agent at the place of entry into the United States with timely and complete information as to the requirements of this part that will apply to the shipment of the material within the United States.

(b) *IMSBC Code.* Notwithstanding the provisions of this part, a bulk solid material that is classed, described, stowed, and segregated in accordance with the IMSBC Code (incorporated by reference, see § 148.8), and otherwise conforms to the requirements of this section, may be offered and accepted for transportation and transported within the United States. The following conditions and limitations apply:

(1) A bulk solid material that is listed in Table 148.10 of this part, but is not subject to the requirements of the IMSBC Code, may not be transported under the provisions of this section and is subject to the requirements of this part. Examples of such materials include environmentally hazardous substances, solid, n.o.s.

(2) Zinc Ashes must conform to the requirements found in § 148.330 of this part.

(3) Exemptions granted by other competent authorities in accordance with the IMSBC Code must be approved by the Commandant (CG–5223) in accordance with § 148.5 of this part.

(4) Tripartite agreements granted by other competent authorities in accordance with the IMSBC Code must be authorized for use in the United States by the Commandant (CG–5223).

§ 148.60 Shipping papers.

The shipper of a material listed in Table 148.10 of this part must provide the master or his representative with appropriate information on the cargo in the form of a shipping paper, in English, prior to loading. Information on the shipping paper must include the following:

(a) The appropriate BCSN. Secondary names may be used in addition to the BCSN;

(b) The identification number, if applicable;

(c) The hazard class of the material as listed in Table 148.10 of this part or on the Special Permit for the material;

(d) The total quantity of the material to be transported;

(e) The stowage factor;

(f) The need for trimming and the trimming procedures, as necessary;

(g) The likelihood of shifting, including angle of repose, if applicable;

(h) A certificate on the moisture content of the cargo and its transportable moisture limit for cargoes that are subject to liquefaction;

(i) Likelihood of formation of a wet base;

(j) Toxic or flammable gases that may be generated by the cargo, if applicable;

(k) Flammability, toxicity, corrosiveness, and propensity to oxygen depletion of the cargo, if applicable;

(l) Self-heating properties of the cargo, if applicable;

(m) Properties on emission of flammable gases in contact with water, if applicable;

(n) Radioactive properties, if applicable;

(o) The name and address of the U.S. shipper (consignor) or, if the shipment originates in a foreign country, the U.S. consignee.

(p) A certification, signed by the shipper, that bears the following statement: "This is to certify that the above named material is properly named, prepared, and otherwise in proper condition for bulk shipment by vessel in accordance with the applicable regulations of the U.S. Coast Guard."

§ 148.61 Emergency response information.

The shipper of a material listed in Table 148.10 of this part must provide the master or his representative with appropriate emergency response information. This information may be included on the shipping papers or in a separate document such as a material safety data sheet (MSDS). The information must include preliminary first aid measures and emergency procedures to be carried out in the event of an incident or fire involving the cargo.

§ 148.62 Location of shipping papers and emergency response information.

(a) The shipping paper and emergency response information required by §§ 148.60 and 148.61 of this part must be kept on board the vessel along with the dangerous cargo manifest required by § 148.70 of this part. When the shipment is by unmanned barge the shipping papers and emergency response information must be kept on the tug or towing vessel. When an unmanned barge is moored, the shipping paper and emergency response information must be on board the barge in a readily retrievable location.

(b) Any written certification or statement from the shipper to the master of a vessel or to the person in charge of a barge must be on, or attached to, the shipping paper. See Subparts E and F of this part for required certifications.

§ 148.70 Dangerous cargo manifest; general.

(a) Except as provided in paragraph (b) of this section and in § 148.72 of this part, each vessel transporting materials listed in Table 148.10 of this part must have a dangerous cargo manifest on board.

(b) This document must be kept in a designated holder on or near the vessel's bridge. When required for an unmanned barge, the document must be on board the tug or towing vessel.

§ 148.71 Information included in the dangerous cargo manifest.

The dangerous cargo manifest must include the following:

(a) The name and official number of the vessel. If the vessel has no official number, the international radio call sign must be substituted;

(b) The nationality of the vessel;

(c) The name of the material as listed in Table 148.10 of this part;

(d) The hold or cargo compartment in which the material is being transported;

(e) The quantity of material loaded in each hold or cargo compartment; and

(f) The signature of the master acknowledging that the manifest is correct, and the date of the signature.

§ 148.72 Dangerous cargo manifest; exceptions.

(a) No dangerous cargo manifest is required for—

(1) Shipments by unmanned barge, except on an international voyage; and

(2) Shipments of materials designated as potentially dangerous materials in Table 148.10 of this part.

(b) When a dangerous cargo manifest is required for an unmanned barge on an international voyage, § 148.71(d) of this part does not apply, unless the barge has more than one cargo compartment.

§ 148.80 Supervision of cargo transfer.

The master must ensure that cargo transfer operations are supervised by a responsible person as defined in § 148.3 of this part.

§ 148.85 Required equipment for confined spaces.

When transporting a material that is listed in Table 148.10 of this part, each vessel, other than an unmanned barge, must have on board the following:

(a) Equipment capable of measuring atmospheric oxygen. At least two members of the crew must be knowledgeable in the use of the equipment, which must be maintained in a condition ready for use and calibrated according to the manufacturer's instructions.

(b) At least two self-contained, pressure-demand-type, air breathing apparatus approved by the Mine Safety and Health Administration (MSHA) or the National Institute for Occupational Safety and Health (NIOSH), each having at least a 30-minute air supply. Each foreign flag vessel must have on board at least two such apparatus that are approved by the flag state administration. The master must ensure that the breathing apparatus is used only by persons trained in its use.

§ 148.86 Confined space entry.

(a) Except in an emergency, no person may enter a confined space unless that space has been tested to ensure there is sufficient oxygen to support life. If the oxygen content is below 19.5 percent, the space must be ventilated and retested before entry.

(b) In an emergency, a confined space may be entered by a trained person wearing self-contained breathing apparatus, suitable protective clothing as necessary, and a wire rope safety line tended by a trained person outside the hold or in an adjacent space. Emergency entry into a confined space must be supervised by a responsible person as defined in § 148.3 of this part.

§ 148.90 Preparations before loading.

Before loading any material listed in Table 148.10 of this part, in bulk on board a vessel, the following conditions must be met:

(a) If a hold previously has contained any material required under Subpart D of this part to be segregated from the material to be loaded, the hold must be thoroughly cleaned of all residue of the previous cargoes.

(b) If the material to be loaded is Class 4.1, 4.2, or 5.1, then all combustible materials must be removed from the hold. Examples of some combustible materials are residue of previous cargoes, loose debris, and dunnage. Permanent wooden battens or sheathing may remain in the hold unless forbidden by Subpart E of this part.

(c) If the material to be loaded is classified as Class 4.3, or is subject to liquefaction, the hold and associated bilge must be as dry as practicable.

§ 148.100 Log book entries.

During the transport in bulk of a material listed in Table 148.10 of this part, the master must keep a record of each temperature measurement and each test for toxic or flammable gases required by this part. The date and time of each measurement and test must be recorded in the vessel's log.

§ 148.110 Procedures followed after unloading.

(a) After a material covered by this part has been unloaded from a vessel, each hold or cargo compartment must be thoroughly cleaned of all residue of such material unless the hold is to be reloaded with that same cargo.

(b) When on U.S. territorial seas or inland waters, cargo associated wastes, cargo residue, and deck sweepings must be retained on the vessel and disposed of in accordance with 33 CFR parts 151.51 through 151.77.

§ 148.115 Report of incidents.

(a) When a fire or other hazardous condition occurs on a vessel transporting a material covered by this part, the master must notify the nearest Captain of the Port as soon as possible and comply with any instructions given.

(b) Any incident or casualty occurring while transporting a material covered by this part must also be reported as required under 49 CFR 171.15, if applicable. A copy of the written report required under 49 CFR 171.16 must also be sent to the Commandant (CG–5223), U.S. Coast Guard, 2100 2nd St., SW., Stop 7126, Washington, DC 20593–7126, at the earliest practicable moment.

(c) Any release to the environment of a hazardous substance in a quantity equal to or in excess of its reportable quantity (RQ) must be reported immediately to the National Response Center at (800) 424–8802 (toll free) or (202) 267–2675.

Subpart D—Stowage and Segregation

§ 148.120 Stowage and segregation requirements.

(a) Each material listed in Table 148.10 of this part must be segregated from incompatible materials in accordance with—

(1) The requirements of Tables 148.120A and 148.120B of this section that pertain to the primary or subsidiary hazard class to which the materials belong. Whenever a subsidiary hazard may exist, the most stringent segregation requirement applies; and

(2) Any specific requirements in Subpart D of this part.

(b) Materials that are required to be separated during stowage must not be handled at the same time. Any residue from a material must be removed before a material required to be separated from it is loaded.

(c) Definitions and application of segregation terms:

(1) "*Separated from*" means located in different cargo compartments or holds when stowed under deck. If the intervening deck is resistant to fire and liquid, a vertical separation, i.e., in different cargo compartments, is acceptable as equivalent to this segregation.

(2) "*Separated by a complete cargo compartment or hold from*" means either a vertical or horizontal separation, for example, by a complete cargo compartment or hold. If the intervening decks are not resistant to fire and liquid, only horizontal separation is acceptable.

(3) "*Separated longitudinally by an intervening complete cargo compartment or hold from*" means that vertical separation alone does not meet this requirement.

TABLE 148.120A—SEGREGATION BETWEEN INCOMPATIBLE BULK SOLID CARGOES

Bulk solid materials	Class	4.1	4.2	4.3	5.1	6.1	7	8	9/PDM
Flammable solid	4.1	X	.....	.....	.....	.....	.....	.....	.....
Spontaneously combustible material	4.2	2	X	.....	.....	.....	.....	.....	.....
Dangerous when wet material	4.3	3	3	X	.....	.....	.....	.....	.....
Oxidizer	5.1	3	3	3	X	.....	.....	.....	.....
Poisonous material	6.1	X	X	X	2	X	.....	.....	.....
Radioactive material	7	2	2	2	2	2	X	.....	.....
Corrosive material	8	2	2	2	2	X	X	X	.....
Miscellaneous hazardous material and potential dangerous material	9/PDM	X	X	X	X	X	2	X	X

Numbers and symbols indicate the following terms as defined in § 148.3 of this part:
2—"Separated from".
3—"Separated by a complete hold or compartment from".
X—No segregation required, except as specified in an applicable section of this subpart or Subpart E of this part.

TABLE 148.120B—SEGREGATION BETWEEN BULK SOLID CARGOES AND INCOMPATIBLE PACKAGED CARGOES

Packaged hazardous material	Bulk solid material								
	Class	4.1	4.2	4.3	5.1	6.1	7	8	9/PDM
Explosives	1.1 1.2 1.5	4	4	4	4	2	2	4	X
Explosives	1.3 1.6	3	3	4	4	2	2	2	X
Explosives	1.4	2	2	2	2	X	2	2	X
Flammable gas	2.1	2	2	1	2	X	2	2	X
Non-flammable compressed gas	2.2	2	2	X	X	X	2	1	X
Poisonous gas	2.3	2	2	X	X	X	2	1	X
Flammable liquid	3	2	2	2	2	X	2	1	X
Flammable solid	4.1	X	1	X	1	X	2	1	X
Spontaneously combustible material	4.2	1	X	1	2	1	2	1	X
Dangerous when wet material	4.3	X	1	X	2	X	2	1	X
Oxidizer	5.1	1	2	2	X	1	1	2	X
Organic peroxide	5.2	2	2	2	2	1	2	2	X
Poisonous material	6.1	X	1	X	1	X	X	X	X
Infectious substance	6.2	3	3	2	3	1	3	3	X
Radioactive material	7	2	2	2	1	X	X	2	X
Corrosive material	8	1	1	1	2	X	2	X	X
Miscellaneous hazardous material	9	X	X	X	X	X	X	X	X

Numbers and symbols indicate the following terms as defined in § 148.3 of this part:
1—"Away from".
2—"Separated from".
3—"Separated by a complete hold or compartment from".

4—"Separated longitudinally by an intervening complete compartment or hold from".
X—No segregation required, except as specified in an applicable section of this subpart or Subpart E of this part.

§ 148.125 Stowage and segregation for materials of Class 4.1.

(a) Class 4.1 materials listed in Table 148.10 of this part must—

(1) Be kept as cool and dry as practical before loading;

(2) Not be loaded or transferred between vessels during periods of rain or snow;

(3) Be stowed separated from foodstuffs; and

(4) Be stowed clear of sources of heat and ignition and protected from sparks and open flame.

(b) Bulkheads between a hold containing a Class 4.1 material and incompatible materials must have cable and conduit penetrations sealed against the passage of gas and vapor.

§ 148.130 Stowage and segregation for materials of Class 4.2.

(a) Class 4.2 materials listed in Table 148.10 of this part must—

(1) Be kept as cool and dry as practical before loading;

(2) Not be loaded or transferred between vessels during periods of rain or snow;

(3) Be stowed clear of sources of heat and ignition and protected from sparks and open flame; and

(4) Except for copra and seed cake, be stowed separate from foodstuffs.

(b) The bulkhead between a hold containing a Class 4.2 material and a hold containing a material not permitted to mix with Class 4.2 materials must have cable and conduit penetrations sealed against the passage of gas and vapor.

§ 148.135 Stowage and segregation for materials of Class 4.3.

(a) Class 4.3 materials listed in Table 148.10 of this part which, in contact with water, emit flammable gases, must—

(1) Be kept as cool and dry as practical before loading;

(2) Not be loaded or transferred between vessels during periods of rain or snow;

(3) Be stowed separate from foodstuffs and all Class 8 liquids; and

(4) Be stowed in a mechanically ventilated hold. Exhaust gases must not penetrate into accommodation, work or control spaces. Unmanned barges that have adequate natural ventilation need not have mechanical ventilation.

(b) The bulkhead between a hold containing a Class 4.3 material and incompatible materials must have cable and conduit penetrations sealed against the passage of gas and vapor.

§ 148.140 Stowage and segregation for materials of Class 5.1.

(a) Class 5.1 materials listed in Table 148.10 of this part must—

(1) Be kept as cool and dry as practical before loading;

(2) Be stowed away from all sources of heat or ignition; and

(3) Be stowed separate from foodstuffs and all readily combustible materials.

(b) Special care must be taken to ensure that holds containing Class 5.1 materials are clean and, whenever practical, only noncombustible securing and protecting materials are used.

(c) Class 5.1 materials must be prevented from entering bilges or other cargo holds.

§ 148.145 Stowage and segregation for materials of Class 7.

(a) Class 7 material listed in Table 148.10 of this part must be stowed—

(1) Separate from foodstuffs; and

(2) In a hold or barge closed or covered to prevent dispersal of the material during transportation.

(b) [Reserved]

§ 148.150 Stowage and segregation for materials of Class 9.

(a) A bulk solid cargo of Class 9 material (miscellaneous hazardous material) listed in Table 148.10 of this part must be stowed and segregated as required by this section.

(b) Ammonium nitrate fertilizer of Class 9 must be segregated as required for Class 5.1 materials in §§ 148.120 and 148.140 of this part and must be stowed—

(1) Separated by a complete hold or compartment from readily combustible materials, chlorates, hypochlorites, nitrites, permanganates, and fibrous materials (*e.g.,* cotton, jute, sisal, *etc.*);

(2) Clear of all sources of heat, including insulated piping; and

(3) Out of direct contact with metal engine-room boundaries.

(c) Castor beans must be stowed separate from foodstuffs and Class 5.1 materials.

(d) Fish meal must be stowed and segregated as required for Class 4.2 materials in §§ 148.120 and 148.130 of this part. In addition, its temperature at loading must not exceed 35 °C (95 °F), or 5 °C (9 °F) above ambient temperature, whichever is higher.

(e) Sulfur must be stowed and segregated as required under §§ 148.120 and 148.125 of this part for a material of Class 4.1.

§ 148.155 Stowage and segregation for potentially dangerous materials.

(a) A PDM must be stowed and segregated according to the requirements of this section and Table 148.155 of this section.

(b) When transporting coal—

(1) Coal must be stowed separate from materials of Class/division 1.4 and Classes 2, 3, 4, and 5 in packaged form; and separated from bulk solid materials of Classes 4 and 5.1;

(2) No material of Class 5.1, in either packaged or bulk solid form, may be stowed above or below a cargo of coal; and

(3) Coal must be separated longitudinally by an intervening complete cargo compartment or hold from materials of Class 1 other than Class/division 1.4.

(c) When transporting direct reduced iron (DRI)—

(1) DRI lumps, pellets, or cold-molded briquettes, and DRI hot-molded briquettes, must be separated from materials of Class/division 1.4, Classes 2, 3, 4, 5, Class 8 acids in packaged form, and bulk solid materials of Classes 4 and 5.1; and

(2) No material of Class 1, other than Class/division 1.4, may be transported on the same vessel with DRI.

(d) Petroleum coke, calcined or uncalcined, must be—

(1) Separated longitudinally by an intervening complete cargo compartment or hold from materials of Class/divisions 1.1 and 1.5; and

(2) Separated by a complete cargo compartment or hold from all hazardous materials and other potentially dangerous materials in packaged and bulk solid form.

TABLE 148.155—STOWAGE AND SEGREGATION REQUIREMENTS FOR POTENTIALLY DANGEROUS MATERIAL

Potentially dangerous material	Segregate as for class listed [1]	"Separate from" foodstuffs	Load only under dry weather conditions	Keep dry	Mechanical ventilation required	"Separate from" material listed	Special provisions
Aluminum Smelting By-products or Aluminum Re-melting Byproducts.	4.3	X	X	X	X	Class 8 liquids	
Brown Coal Briquettes.	.....	.....	.....	.....	.....	See paragraph (b) of this section.	See paragraph (b) of this section.
Charcoal	4.1	.....	.....	X	.....	Oily materials	
Coal	.....	.....	.....	.....	.....	See paragraph (b) of this section.	See paragraph (b) of this section.
Direct reduced iron (A).	.....	.....	.....	.....	.....	See paragraph (c) of this section.	See paragraph (c) of this section.
Direct reduced iron (B).	.....	.....	.....	.....	.....	See paragraph (c) of this section.	See paragraph (c) of this section.
Ferrophosphorus	4.3	X	X	X	X	Class 8 liquids	
Ferrolilicon	4.3	X	X	X	X	Class 8 liquids	
Fluorospar	.....	X	.....	.....	.....	Class 8 liquids	
Lime, Unslaked	.....	.....	.....	X	.....	All packaged and bulk solid hazardous materials.	
Linted Cotton Seed	.....	.....	.....	X	.....		
Magnesia, Unslaked	.....	.....	.....	.....	.....	All packaged and bulk solid hazardous materials.	
Metal Sulfide Concentrates.	4.2	X	.....	.....	.....	Class 8 liquids	
Petroleum Coke	.....	X	.....	.....	.....		See section 148.155(d).
Pitch Prill	4.1	.....	.....	.....	.....		
Pyrites, Calcined	.....	X	X	X	X		
Sawdust	4.1	.....	.....	X	.....	All Class 5.1 and 8 liquids.	
Silicomanganese	4.3	X	X	X	X	Class 8 liquids	
Tankage	4.2	X	X	.....	.....		
Vanadium	6.1	X	.....	.....	.....		
Wood chips	4.1	.....	.....	.....	.....		
Wood pellets	4.1	.....	.....	.....	.....		
Wood pulp pellets	4.1	.....	.....	.....	.....		

[1] See Tables 148.120A and B.

Subpart E—Special Requirements for Certain Materials

§ 148.200 Purpose.

This subpart prescribes special requirements for specific materials. These requirements are in addition to the minimum transportation requirements in Subpart C of this part that are applicable to all materials listed in Table 148.10 of this part.

§ 148.205 Ammonium nitrate and ammonium nitrate fertilizers.

(a) This section applies to the stowage and transportation in bulk of ammonium nitrate and the following fertilizers composed of uniform, non-segregating mixtures containing ammonium nitrate:

(1) Ammonium nitrate containing added organic matter that is chemically inert towards the ammonium nitrate; containing at least 90 percent ammonium nitrate and a maximum of 0.2 percent of combustible material (including organic material calculated as carbon); or containing less than 90 percent but more than 70 percent of ammonium nitrate and a maximum of 0.4 percent combustible material;

(2) Ammonium nitrate with calcium carbonate and/or dolomite, containing more than 80 percent but less than 90 percent of ammonium nitrate and a maximum of 0.4 percent of total combustible material;

(3) Ammonium nitrate with ammonium sulfate containing more than 45 percent but a maximum of 70 percent of ammonium nitrate and containing a maximum of 0.4 percent of combustible material; and

(4) Nitrogen phosphate or nitrogen/potash type fertilizers or complete nitrogen/phosphate/potash type fertilizers containing more than 70 percent but less than 90 percent of ammonium nitrate and a maximum of 0.4 percent of combustible material.

(b) No material covered by this section may be transported in bulk unless it demonstrates resistance to detonation when tested by one of the following methods:

(1) Appendix 2, Section 5, of the IMSBC Code (incorporated by reference, see § 148.8);

(2) Test series 1 and 2 of the Class 1 (explosive) in the UN Manual of Tests and Criteria, Part I (incorporated by reference, see § 148.8); or

(3) An equivalent test satisfactory to the Administration of the country of shipment.

(c) Before loading a material covered by this section—

(1) The shipper must give the master of the vessel written certification that the material has met the test requirements of paragraph (b) of this section;

(2) The cargo hold must be inspected for cleanliness and free from readily combustible materials;

(3) Each cargo hatch must be weathertight as defined in § 42.13–10 of this chapter;

(4) The temperature of the material must be less than 55 °C (131 °F); and

(5) Each fuel tank under a cargo hold where the material is stowed must be pressure tested before loading to ensure that there is no leakage of manholes or piping systems leading through the cargo hold.

(d) Bunkering or transferring of fuel to or from the vessel may not be performed during cargo loading and unloading operations involving a material covered by this section.

(e) When a material covered by this section is transported on a cargo vessel—

(1) No other material may be stowed in the same hold with that material;

(2) In addition to the segregation requirements in § 148.140 of this part, the material must be separated by a complete cargo compartment or hold from readily combustible materials, chlorates, chlorides, chlorites, hypochlorites, nitrites, permanganates, and fibrous materials; and

(3) The bulkhead between a cargo hold containing a material covered by this section and the engine room must be insulated to "A–60" class division or an equivalent arrangement to the satisfaction of the cognizant Coast Guard Captain of the Port or the Administration of the country of shipment.

§ 148.220 Ammonium nitrate-phosphate fertilizers.

(a) This section applies to the stowage and transportation of uniform, nonsegregating mixtures of nitrogen/phosphate or nitrogen/potash type fertilizers, or complete fertilizers of nitrogen/phosphate/potash type containing a maximum of 70 percent of ammonium nitrate and containing a maximum of 0.4 percent total added combustible material or containing a maximum of 45 percent ammonium nitrate with unrestricted combustible material.

(b) A fertilizer mixture described in paragraph (a) of this section is exempt if—

(1) When tested in accordance with the trough test prescribed in Appendix 2, Section 4, of the IMSBC Code or in the UN Manual of Tests and Criteria, Part III, Subsection 38.2 (incorporated by reference, see § 148.8), it is found to be free from the risk of self-sustaining decomposition.

(2) [Reserved]

(c) No fertilizer covered by this section may be transported in bulk if, when tested in accordance with the trough test prescribed in Appendix 2, Section 4, of the IMSBC Code or in the UN Manual of Tests and Criteria, Part III, Subsection 38.2 (incorporated by reference, see § 148.8), it has a self-sustaining decomposition rate that is greater than 0.25 meters per hour, or is liable to self-heat sufficient to initiate decomposition.

(d) Fertilizers covered by this section must be stowed away from all sources of heat, and out of direct contact with a metal engine compartment boundary.

(e) Bunkering or transferring of fuel may not be performed during loading and unloading of fertilizer covered by this section.

(f) Fertilizer covered by this section must be segregated as prescribed in §§ 148.140 and 148.220(d) of this part.

§ 148.225 Calcined pyrites (pyritic ash, fly ash).

(a) This part does not apply to the shipment of calcined pyrites that are the residual ash of oil or coal fired power stations.

(b) This section applies to the stowage and transportation of calcined pyrites that are the residual product of sulfuric acid production or elemental metal recovery operations.

(c) Before loading calcined pyrites covered by this section—

(1) The cargo space must be as clean and dry as practical;

(2) The calcined pyrites must be dry; and

(3) Precautions must be taken to prevent the penetration of calcined pyrites into other cargo spaces, bilges, wells, and ceiling boards.

(d) After calcined pyrites covered by this section have been unloaded from a cargo space, the cargo space must be thoroughly cleaned. Cargo residues and sweepings must be disposed of as prescribed in 33 CFR parts 151.55 through 151.77.

§ 148.227 Calcium nitrate fertilizers.

This part does not apply to commercial grades of calcium nitrate fertilizers consisting mainly of a double salt (calcium nitrate and ammonium nitrate) and containing a maximum of 15.5 percent nitrogen and at least 12 percent of water.

§ 148.230 Calcium oxide (lime, unslaked).

(a) When transported by barge, unslaked lime (calcium oxide) must be carried in an unmanned, all steel, double-hulled barge equipped with weathertight hatches or covers. The barge must not carry any other cargo while unslaked lime is on board.

(b) The shipping paper requirements in § 148.60 of this part and the dangerous cargo manifest requirements in § 148.70 of this part do not apply to the transportation of unslaked lime under paragraph (a) of this section.

§ 148.235 Castor beans.

(a) This part applies only to the stowage and transportation of whole castor beans. Castor meal, castor pomace, and castor flakes may not be shipped in bulk.

(b) Persons handling castor beans must wear dust masks and goggles.

(c) Care must be taken to prevent castor bean dust from entering accommodation, control, or service spaces during cargo transfer operations.

§ 148.240 Coal.

(a) The electrical equipment in cargo holds carrying coal must meet the requirements of Subpart 111.105 of this chapter or an equivalent standard approved by the administration of the vessel's flag state.

(b) Before coal is loaded in a cargo hold, the bilges must be as clean and dry as practical. The hold must also be free of any readily combustible material, including the residue of previous cargoes if other than coal.

(c) The master of each vessel carrying coal must ensure that—

(1) All openings to the cargo hold, except for unloading gates on self-unloading vessels, are sealed before loading the coal and, unless the coal is as described in paragraph (f) of this section, the hatches must also be sealed after loading;

(2) As far as practical, gases emitted by the coal do not accumulate in enclosed working spaces such as storerooms, shops, or passageways, and tunnel spaces on self-unloading vessels, and that such spaces are adequately ventilated;

(3) The vessel has adequate ventilation as required by paragraph (f) of this section; and

(4) If the temperature of the coal is to be monitored under paragraph (e)(2)(i) of this section, the vessel has instruments that are capable of measuring the temperature of the cargo in the range 0°–100 °C (32 °–212 °F) without entry into the cargo hold.

(d) A cargo hold containing coal must not be ventilated unless the conditions of paragraph (f) of this section are met, or unless methane is detected under paragraph (h) of this section.

(e) If coal waiting to be loaded has shown a tendency to self-heat, has been handled so that it may likely self-heat, or has been observed to be heating, the master is responsible for monitoring the temperature of the coal at several intervals during these times:

(1) Before loading; and

(2) During the voyage, by—

(i) Measuring the temperature of the coal;

(ii) Measuring the emission of carbon monoxide; or

(iii) Both.

(f) If coal waiting to be loaded has a potential to emit dangerous amounts of methane, for example it is freshly mined, or has a history of emitting dangerous amounts of methane, then:

(1) Surface ventilation, either natural or from fixed or portable nonsparking fans, must be provided; and

(2) The atmosphere above the coal must be monitored for the presence of methane as prescribed in paragraph (h) of this section. The results of this monitoring must be recorded at least twice in every 24-hour period, unless the conditions of paragraph (m) of this section are met.

(g) Electrical equipment and cables in a hold containing a coal described in paragraph (f) of this section must be either suitable for use in an explosive gas atmosphere or de-energized at a point outside the hold. Electrical equipment and cables necessary for continuous safe operations, such as lighting fixtures, must be suitable for use in an explosive gas atmosphere. The master of the vessel must ensure that the affected equipment and cables remain de-energized as long as this coal remains in the hold.

(h) For all coal loaded on a vessel, other than an unmanned barge, the atmosphere above the coal must be routinely tested for the presence of methane, carbon monoxide, and oxygen, following the procedures in the Appendices to the schedules for Coal and Brown Coal Briquettes as contained in the IMSBC Code (incorporated by reference, see § 148.8). This testing must be performed in such a way that the cargo hatches are not opened and entry into the hold is not necessary.

(i) When carrying a coal described in paragraph (e) of this section, the atmosphere above the coal must be monitored for the presence of carbon monoxide as prescribed in paragraph (h) of this section. The results of this monitoring must be recorded at least twice in every 24-hour period, unless the conditions of paragraph (m) of this section are met. If the level of carbon monoxide is increasing rapidly or reaches 20 percent of the lower flammability limit (LFL), the frequency of monitoring must be increased.

(j) When a cargo of coal has a potential to self-heat or has been observed to be heating, the hatches should be closed and sealed and all surface ventilation halted except as necessary to remove any methane that may have accumulated.

(k) If the level of carbon monoxide monitored under paragraph (i) of this section continues to increase rapidly or the temperature of coal carried on board a vessel exceeds 55 °C (131 °F) and is increasing rapidly, the master must notify the nearest Coast Guard Captain of the Port of—

(1) The name, nationality, and position of the vessel;

(2) The most recent temperature, if measured, and levels of carbon monoxide and methane;

(3) The port where the coal was loaded and the destination of the coal;

(4) The last port of call of the vessel and its next port of call; and

(5) What action has been taken.

(l) If the level of methane as monitored under paragraph (h) of this section reaches 20 percent of the LFL or is increasing rapidly, ventilation of the cargo hold, under paragraph (f) of this section, must be initiated. If this ventilation is provided by opening the cargo hatches, care must be taken to avoid generating sparks.

(m) The frequency of monitoring required by paragraph (f) of this section may be reduced at the discretion of the master provided that—

(1) The level of gas measured is less than 20 percent of the LFL;

(2) The level of gas measured has remained steady or decreased over three consecutive readings, or has increased by less than 5 percent over four consecutive readings spanning at least 48 hours; and

(3) Monitoring continues at intervals sufficient to determine that the level of gas remains within the parameters of paragraphs (m)(1) and (m)(2) of this section.

§ 148.242 Copra.

Copra must have surface ventilation. It must not be stowed against heated surfaces including fuel oil tanks which may require heating.

§ 148.245 Direct reduced iron (DRI); lumps, pellets, and cold-molded briquettes.

(a) Before loading DRI lumps, pellets, or cold-molded briquettes—

(1) The master must have a written certification from a competent person appointed by the shipper and recognized by the Commandant (CG–5223) stating that the DRI, at the time of loading, is suitable for shipment;

(2) The DRI must be aged for at least 3 days, or be treated with an air passivation technique or some other equivalent method that reduces its reactivity to at least the same level as the aged DRI; and

(3) Each hold and bilge must be as clean and dry as practical. Other than double bottom tanks, adjacent ballast tanks must be kept empty when possible. All wooden fixtures, such as battens, must be removed from the hold.

(b) Each boundary of a hold where DRI lumps, pellets, or cold-molded briquettes are to be carried must be resistant to fire and passage of water.

(c) DRI lumps, pellets, or cold-molded briquettes that are wet, or that are known to have been wetted, may not be accepted for transport. The moisture content of the DRI must not exceed 0.3 percent prior to loading.

(d) DRI lumps, pellets and cold-molded briquettes must be protected at all times from contact with water, and must not be loaded or transferred from one vessel to another during periods of rain or snow.

(e) DRI lumps, pellets, or cold-molded briquettes may not be loaded if their temperature is greater than 65 °C (150 °F).

(f) The shipper of DRI lumps, pellets, or cold-molded briquettes in bulk must ensure that an inert atmosphere of less than 5 percent oxygen and 1 percent hydrogen, by volume, is maintained throughout the voyage in any hold containing these materials.

(g) When DRI lumps, pellets, or cold-molded briquettes are loaded, precautions must be taken to avoid the concentration of fines (pieces less than 6.35mm in size) in any one location in the cargo hold.

(h) Radar and RDF scanners must be protected against the dust generated during cargo transfer operations of DRI lumps, pellets, or cold-molded briquettes.

§ 148.250 Direct reduced iron (DRI); hot-molded briquettes.

(a) Before loading DRI hot-molded briquettes—

(1) The master must have a written certification from a competent person appointed by the shipper and recognized by the Commandant (CG–5223) that at the time of loading the DRI hot-molded briquettes are suitable for shipment; and

(2) Each hold and bilge must be as clean and dry as practical. Except double bottom tanks, adjacent ballast tanks must be kept empty where possible. All wooden fixtures, such as battens, must be removed.

(b) All boundaries of a hold must be resistant to fire and passage of water to carry DRI hot-molded briquettes.

(c) DRI hot-molded briquettes must be protected at all times from contact with water. They must not be loaded or transferred from one vessel to another during periods of rain or snow.

(d) DRI hot-molded briquettes may not be loaded if their temperature is greater than 65 °C (150 °F).

(e) When loading DRI hot-molded briquettes, precautions must be taken to avoid the concentration of fines (pieces less than 6.35mm in size) in any one location in the cargo hold.

(f) Adequate surface ventilation must be provided when carrying or loading DRI hot-molded briquettes.

(g) When DRI hot-molded briquettes are carried by unmanned barge—

(1) The barge must be fitted with vents adequate to provide natural ventilation; and

(2) The cargo hatches must be closed at all times after loading the DRI hot-molded briquettes.

(h) Radar and RDF scanners must be adequately protected against dust generated during cargo transfer operations of DRI hot-molded briquettes.

(i) During final discharge only, a fine spray of water may be used to control dust from DRI hot-molded briquettes.

§ 148.255 Ferrosilicon, aluminum ferrosilicon, and aluminum silicon containing more than 30% but less than 90% silicon.

(a) This section applies to the stowage and transportation of ferrosilicon, aluminum ferrosilicon, and aluminum silicon containing more than 30 percent but less than 90 percent silicon.

(b) The shipper of material described in paragraph (a) of this section must give the master a written certification stating that after manufacture the material was stored under cover, but exposed to the weather, in the particle size in which it is to be shipped, for at least three days before shipment.

(c) Material described in paragraph (a) of this section must be protected at all times from contact with water, and must not be loaded or unloaded during periods of rain or snow.

(d) Except as provided in paragraph (e) of this section, each hold containing material described in paragraph (a) of this section must be mechanically ventilated by at least two separate fans. The total ventilation must be at least five air changes per hour, based on the empty hold. Ventilation must not allow escaping gas to reach accommodation or work spaces, on or under deck.

(e) An unmanned barge which is provided with natural ventilation need not comply with paragraph (d) of this section.

(f) Each space adjacent to a hold containing material described in paragraph (a) of this section must be well ventilated with mechanical fans. No person may enter that space unless it has been tested to ensure that it is free from phosphine and arsine gases.

(g) Scuttles and windows in accommodation and work spaces adjacent to holds containing material described in paragraph (a) of this section must be kept closed while this material is being loaded and unloaded.

(h) Any bulkhead between a hold containing material described in paragraph (a) of this section and an accommodation or work space must be gas tight and adequately protected against damage from any unloading equipment.

(i) When a hold containing material described in paragraph (a) of this section is equipped with atmosphere sampling type smoke detectors with lines that terminate in accommodation or work spaces, those lines must be blanked off gas-tight.

(j) If a hold containing material described in paragraph (a) of this section must be entered at any time, the hatches must be open for two hours before entry to dissipate any accumulated gases. The atmosphere in the hold must be tested to ensure that there is no phosphine or arsine gas present.

(k) After unloading material described in paragraph (a) of this section, each cargo hold must be thoroughly cleaned and tested to ensure that no phosphine or arsine gas remains.

§ 148.260 Ferrous metal.

(a) This part does not apply to the stowage and transportation in bulk of stainless steel borings, shavings, turnings, or cuttings; nor does this part apply to an unmanned barge on a voyage entirely on the navigable waters of United States.

(b) Ferrous metal may not be stowed or transported in bulk unless the following conditions are met:

(1) All wooden sweat battens, dunnage, and debris must be removed from the hold before the ferrous metal is loaded;

(2) If weather is inclement during loading, hatches must be covered or otherwise protected to keep the material dry;

(3) During loading and transporting, the bilge of each hold in which ferrous metal is stowed or will be stowed must be kept as dry as practical;

(4) During loading, the ferrous metal must be compacted in the hold as frequently as practicable with a bulldozer or other means that provides equivalent surface compaction;

(5) No other material may be loaded in a hold containing ferrous metal unless—

(i) The material to be loaded in the same hold with the ferrous metal is not a material listed in Table 148.10 of this part or a readily combustible material;

(ii) The loading of the ferrous metal is completed first; and

(iii) The temperature of the ferrous metal in the hold is below 55 °C (131 °F) or has not increased in eight hours before the loading of the other material; and

(6) During loading, the temperature of the ferrous metal in the pile being loaded must be below 55 °C (131 °F).

(c) The master of a vessel that is loading or transporting a ferrous metal must ensure that the temperature of the ferrous metal is taken—

(1) Before loading;

(2) During loading, in each hold and pile being loaded, at least once every twenty-four hours and, if the temperature is rising, as often as is necessary to ensure that the requirements of this section are met; and

(3) After loading, in each hold, at least once every 24 hours.

(d) During loading, if the temperature of the ferrous metal in a hold is 93 °C (200 °F) or higher, the master must notify the Coast Guard Captain of the Port and suspend loading until the Captain of the Port is satisfied that the temperature of the ferrous metal is 88 °C (190 °F) or less.

(e) After loading ferrous metal—

(1) If the temperature of the ferrous metal in each hold is 65 °C (150 °F) or above, the master must notify the Coast Guard Captain of the Port, and the vessel must remain in the port area until the Captain of the Port is satisfied that the temperature of ferrous metal has shown a downward trend below 65 °C (150 °F) for at least eight hours after completion of loading of the hold; or

(2) If the temperature of the ferrous metal in each hold is less than 88 °C (190 °F) and has shown a downward trend for at least eight hours after the completion of loading, the master must notify the Coast Guard Captain of the Port, and the vessel must remain in the port area until the Captain of the Port confirms that the vessel is sailing directly to another port, no further than 12 hours sailing time, for the purpose of loading more ferrous metal in bulk or to completely off-load the ferrous metal.

(f) Except for shipments of ferrous metal in bulk which leave the port of loading under the conditions specified in paragraph (e)(2) of this section, if after the vessel leaves the port, the temperature of the ferrous metal in the hold rises above 65 °C (150 °F), the master must notify the nearest Coast Guard Captain of the Port as soon as possible of—

(1) The name, nationality, and position of the vessel;

(2) The most recent temperature taken;

(3) The length of time that the temperature has been above 65 °C (150 °F) and the rate of rise, if any;

(4) The port where the ferrous metal was loaded and the destination of the ferrous metal;

(5) The last port of call of the vessel and its next port of call;

(6) What action has been taken; and

(7) Whether any other cargo is endangered.

§ 148.265 Fish meal or fish scrap.

(a) This part does not apply to fish meal or fish scrap that contains less than 5 percent moisture by weight.

(b) Fish meal or fish scrap may contain a maximum of 12 percent moisture by weight and a maximum of 15 percent fat by weight.

(c) At the time of production, fish meal or fish scrap must be treated with an effective antioxidant (at least 400 mg/kg (ppm) ethoxyquin, at least 1000 mg/kg (ppm) butylated hydroxytoluene, or at least 1000 mg/kg (ppm) of tocopherol-based liquid antioxidant).

(d) Shipment of the fish meal or fish scrap must take place a maximum of 12 months after the treatment prescribed in paragraph (c) of this section.

(e) Fish meal or fish scrap must contain at least 100 mg/kg (ppm) of ethoxyquin or butylated hydroxytoluene or at least 250 mg/kg (ppm) of tocopherol-based antioxidant at the time of shipment.

(f) At the time of loading, the temperature of the fish meal or fish scrap to be loaded may not exceed 35 °C (95 °F), or 5 °C (9 °F) above the ambient temperature, whichever is higher.

(g) For each shipment of fish meal or fish scrap, the shipper must give the master a written certification stating—

(1) The total weight of the shipment;

(2) The moisture content of the material;

(3) The fat content of the material;

(4) The type of antioxidant and its concentration in the fish meal or fish scrap at the time of shipment;

(5) The date of production of the material; and

(6) The temperature of the material at the time of shipment.

(h) During a voyage, temperature readings must be taken of fish meal or fish scrap three times a day and recorded. If the temperature of the material exceeds 55 °C (131 °F) and continues to increase, ventilation to the hold must be restricted. This paragraph does not apply to shipments by unmanned barge.

§ 148.270 Hazardous substances.

(a) Each bulk shipment of a hazardous substance must—

(1) Be assigned a shipping name in accordance with 49 CFR 172.203(c); and

(2) If the hazardous substance is also listed as a hazardous solid waste in 40 CFR part 261, follow the applicable requirements of 40 CFR chapter I, subchapter I.

(b) Each release of a quantity of a designated substance equal to or greater than the reportable quantity, as set out in Table 1 to Appendix A of 49 CFR 171.101, when discharged into or upon the navigable waters of the United States, adjoining shorelines, into or upon the contiguous zone, or beyond the contiguous zone, must be reported as required in subpart B of 33 CFR part 153.

(c) A hazardous substance must be stowed in a hold or barge that is closed or covered and prevents dispersal of the material during transportation.

(d) During cargo transfer operations, a spill or release of a hazardous substance must be minimized to the greatest extent possible. Each release must be reported as required in paragraph (b) of this section.

(e) After a hazardous substance is unloaded, the hold in which it was carried must be cleaned thoroughly. The residue of the substance must be disposed of pursuant to 33 CFR 151.55 through 151.77 and the applicable regulations of 40 CFR subchapter I.

§ 148.275 Iron oxide, spent; iron sponge, spent.

(a) Before spent iron oxide or spent iron sponge is loaded in a closed hold, the shipper must give the master a written certification that the material has been cooled and weathered for at least eight weeks.

(b) Both spent iron oxide and spent iron sponge may be transported on open hold all-steel barges after exposure to air for a period of at least ten days.

§ 148.280 Magnesia, unslaked (lightburned magnesia, calcined magnesite, caustic calcined magnesite).

(a) This part does not apply to the transport of natural magnesite, magnesium carbonate, or magnesia clinkers.

(b) When transported by barge, unslaked magnesia must be carried in an unmanned, all-steel, double-hulled barge equipped with weathertight hatches or covers. The barge may not carry any other cargo while unslaked magnesia is on board.

(c) The shipping paper requirements in § 148.60 of this part and the dangerous cargo manifest requirements in § 148.70 of this part do not apply to unslaked magnesia transported under the requirements of paragraph (b) of this section.

§ 148.285 Metal sulfide concentrates.

(a) When information given by the shipper under § 148.60 of this part indicates that the metal sulfide concentrate may generate toxic or flammable gases, the appropriate gas detection equipment from §§ 148.415 and 148.420 of this part must be on board the vessel.

(b) No cargo hold containing a metal sulfide concentrate may be ventilated.

(c) No person may enter a hold containing a metal sulfide concentrate unless—

(1) The atmosphere in the cargo hold has been tested and contains sufficient oxygen to support life and, where the shipper indicates that toxic gas(es) may be generated, the atmosphere in the cargo hold has been tested for the toxic gas(es) and the concentration of the gas(es) is found to be less than the TLV; or

(2) An emergency situation exists and the person entering the cargo hold is wearing the appropriate self-contained breathing apparatus.

§ 148.290 Peat moss.

(a) Before shipment, peat moss must be stockpiled under cover to allow drainage and reduce its moisture content.

(b) The cargo must be ventilated so that escaping gases cannot reach living quarters on or above deck.

(c) Persons handling or coming into contact with peat moss must wear gloves, a dust mask, and goggles.

§ 148.295 Petroleum coke, calcined or uncalcined, at 55 °C (131 °F) or above.

(a) This part does not apply to shipments of petroleum coke, calcined or uncalcined, on any vessel when the temperature of the material is less than 55 °C (131 °F).

(b) Petroleum coke, calcined or uncalcined, or a mixture of calcined and uncalcined petroleum coke may not be loaded when its temperature exceeds 107 °C (225 °F).

(c) No other hazardous materials may be stowed in any hold adjacent to a hold containing petroleum coke except as provided in paragraph (d) of this section.

(d) Before petroleum coke at 55 °C (131 °F) or above may be loaded into a hold over a tank containing fuel or material having a flashpoint of less than 93 °C (200 °F), a 0.6 to 1.0 meter (2 to 3 foot) layer of the petroleum coke at a temperature not greater than 43 °C (110 °F) must first be loaded.

(e) Petroleum coke must be loaded as follows:

(1) For a shipment in a hold over a fuel tank, the loading of a cooler layer of petroleum coke in the hold as required by paragraph (d) of this section must be completed before loading the petroleum coke at 55 °C (131 °F) or above in any hold of the vessel;

(2) Upon completion of the loading described in paragraph (e)(1) of this section, a 0.6 to 1.0 meter (2 to 3 foot) layer of the petroleum coke at 55 °C (131 °F) or above must first be loaded into each hold, including those holds already containing a cooler layer of the petroleum coke; and

(3) Upon completion of the loading described in paragraph (e)(2) of this section, normal loading of the petroleum coke may be completed.

(f) The master of the vessel must warn members of a crew that petroleum coke is hot, and that injury due to burns is possible.

(g) During the voyage, the temperature of the petroleum coke must be monitored often enough to detect spontaneous heating.

§ 148.300 Radioactive materials.

(a) Radioactive materials that may be stowed or transported in bulk are limited to those radioactive materials defined in 49 CFR 173.403 as Low Specific Activity Material, LSA–1, or Surface Contaminated Object, SCO–1.

(b) Skin contact, inhalation or ingestion of dusts generated by Class 7 material listed in Table 148.10 of this part must be minimized.

(c) Each hold used for the transportation of Class 7 material (radioactive) listed in Table 148.10 of this part must be surveyed after the completion of off-loading by a qualified person using appropriate radiation detection instruments. Such holds must not be used for the transportation of any other material until the non-fixed contamination on any surface, when averaged over an area of 300 cm^2, does not exceed the following levels:

(1) 4.0 Bq/cm^2 (10^{-4} uCi/cm^2;) for beta and gamma emitters and low toxicity alpha emitters, natural uranium, natural thorium, uranium-235, uranium-238, thorium-232, thorium-228 and thorium-230 when contained in ores or physical or chemical concentrates, and radionuclides with a half-life of less than 10 days; and

(2) 0.4 Bq/cm^2 (10^{-5} uCi/cm^2) for all other alpha emitters.

§ 148.310 Seed cake.

(a) This part does not apply to solvent-extracted rape seed meal, pellets, soya bean meal, cotton seed meal, or sunflower seed meal that—

(1) Contains a maximum of 4 percent vegetable oil and a maximum of 15 percent vegetable oil and moisture combined; and

(2) As far as practical, is free from flammable solvent.

(b) This part does not apply to mechanically expelled citrus pulp pellets containing not more than 2.5 percent oil and a maximum of 14 percent oil and moisture combined.

(c) Before loading, the seed cake must be aged per the instructions of the shipper.

(d) Before loading, the shipper must give the master or person in charge of a barge a certificate from a competent testing laboratory stating the oil and moisture content of the seed cake.

(e) The seed cake must be kept as dry as practical at all times.

(f) If the seed cake is solvent-extracted, it must be—

(1) As free as practical from flammable solvent; and

(2) Stowed in a mechanically ventilated hold.

(g) For a voyage with a planned duration greater than 5 days, the vessel must be equipped with facilities for introducing carbon dioxide or another inert gas into the hold.

(h) Temperature readings of the seed cake must be taken at least once in every 24-hour period. If the temperature exceeds 55 °C (131 °F) and continues to increase, ventilation to the cargo hold must be discontinued. If heating continues after ventilation has been discontinued, carbon dioxide or the inert gas required under paragraph (g) of this section must be introduced into the hold. If the seed cake is solvent-extracted, the use of inert gas must not be introduced until fire is apparent, to avoid the possibility of igniting the solvent vapors by the generation of static electricity.

(i) Seed cake must be carried under the terms of a Special Permit issued by the Commandant (CG–5223) per subpart B of this part if—

(1) The oil was mechanically expelled; and

(2) It contains more than 10 percent vegetable oil or more than 20 percent vegetable oil and moisture combined.

§ 148.315 Sulfur.

(a) This part applies to lump or coarse grain powder sulfur only. Fine-grained powder ("flowers of sulfur") may not be transported in bulk.

(b) After the loading or unloading of lump or coarse grain powder sulfur has been completed, sulfur dust must be removed from the vessel's decks, bulkheads, and overheads. Cargo residues and deck sweepings must be disposed of pursuant to 33 CFR 151.55 through 151.77.

(c) A cargo space that contains sulfur or the residue of a sulfur cargo must be adequately ventilated, preferably by mechanical means. Each ventilator intake must be fitted with a spark-arresting screen.

§ 148.320 Tankage; garbage tankage; rough ammonia tankage; or tankage fertilizer.

(a) This part applies to rough ammonia tankage in bulk that contains 7 percent or more moisture by weight, and garbage tankage and tankage fertilizer that contains 8 percent or more moisture by weight.

(b) Tankage to which this part applies may not be loaded in bulk if its temperature exceeds 38 °C (100 °F).

(c) During the voyage, the temperature of the tankage must be monitored often enough to detect spontaneous heating.

§ 148.325 Wood chips; wood pellets; wood pulp pellets.

(a) This part applies to wood chips and wood pulp pellets in bulk that may oxidize, leading to depletion of oxygen and an increase in carbon dioxide in the cargo hold.

(b) No person may enter a cargo hold containing wood chips, wood pellets, or wood pulp pellets, unless—

(1) The atmosphere in the cargo hold has been tested and contains enough oxygen to support life; or

(2) The person entering the cargo hold is wearing the appropriate self-contained breathing apparatus.

§ 148.330 Zinc ashes; zinc dross; zinc residues; zinc skimmings.

(a) The shipper must inform the cognizant Coast Guard Captain of the Port in advance of any cargo transfer operations involving zinc ashes, zinc dross, zinc residues, or zinc skimmings (collectively, "zinc material") in bulk.

(b) Zinc material must be aged by exposure to the elements for at least one year before shipment in bulk.

(c) Before loading in bulk, zinc material must be stored under cover for a period of time to ensure that it is as dry as practical. No zinc material that is wet may be accepted for shipment.

(d) Zinc material may not be loaded in bulk if its temperature is greater than 11.1 °C (52 °F) in excess of the ambient temperature.

(e) Paragraphs (e)(1) through (e)(5) of this section apply only when zinc materials are carried by a cargo vessel:

(1) Zinc material in bulk must be stowed in a mechanically ventilated hold that—

(i) Is designed for at least one complete air change every 30 minutes based on the empty hold;

(ii) Has explosion-proof motors approved for use in Class I, Division 1, Group B atmospheres or equivalent motors approved by the vessel's flag state administration for use in hydrogen atmospheres; and

(iii) Has nonsparking fans.

(2) Combustible gas detectors capable of measuring hydrogen concentrations of 0 to 4.1 percent by volume must be permanently installed in holds that will carry zinc material. If the concentration of hydrogen in the space above the cargo exceeds 1 percent by volume, the ventilation system must be run until the concentration drops below 1 percent by volume.

(3) Thermocouples must be installed approximately 6 inches below the surface of the zinc material or in the space immediately above the zinc material. If an increase in temperature is detected, the mechanical ventilation system required by paragraph (d) of this section must be used until the temperature of the zinc material is below 55 °C (131 °F).

(4) Except as provided in paragraph (e)(5) of this section, the cargo hatches of holds containing zinc material must remain sealed to prevent the entry of seawater.

(5) If the concentration of hydrogen is near 4.1 percent by volume and increasing, despite ventilation, or the temperature of the zinc material reaches 65 °C (150 °F), the cargo hatches should be opened provided that weather and sea conditions are favorable. When hatches are opened take care to prevent sparks and minimize the entry of water.

Subpart F—Additional Special Requirements

§ 148.400 Applicability.

Unless stated otherwise, the requirements of this subpart apply only to the shipment or loading of materials, listed in Table 148.10 of this part, for which Table 148.10 contains a reference to a section or paragraph of this subpart.

§ 148.405 Sources of ignition.

(a) Except in an emergency, no welding, burning, cutting, chipping, or other operations involving the use of fire, open flame, sparks, or arc-producing equipment, may be performed in a cargo hold containing a Table 148.10 material or in an adjacent space.

(b) A cargo hold or adjacent space must not have any flammable gas concentrations over 10 percent of the LFL before the master may approve operations involving the use of fire, open flame, or spark- or arc-producing equipment in that hold or adjacent space.

§ 148.407 Smoking.

When Table 148.10 of this part associates a material with a reference to this section, and that material is being loaded or unloaded, smoking is prohibited anywhere on the weatherdeck of the vessel. While such a material is on board the vessel, smoking is prohibited in spaces adjacent to the cargo hold and on the vessel's deck in the vicinity of cargo hatches, ventilator outlets, and other accesses to the hold containing the material. "NO SMOKING" signs must be displayed in conspicuous locations in the areas where smoking is prohibited.

§ 148.410 Fire hoses.

When Table 148.10 of this part associates a material with a reference to this section, a fire hose must be available at each hatch through which the material is being loaded.

§ 148.415 Toxic gas analyzers.

When Table 148.10 of this part associates a material with a reference to a paragraph in this section, each vessel transporting the material, other than an unmanned barge, must have on board a gas analyzer appropriate for the toxic gas listed in that paragraph. At least two members of the crew must be knowledgeable in the use of the equipment. The equipment must be maintained in a condition ready for use and calibrated according to the instructions of its manufacturer. The atmosphere in the cargo hold and adjacent spaces must be tested before a person is allowed to enter these spaces. If toxic gases are detected, the space must be ventilated and retested before entry. The toxic gases for which the requirements of this section must be met are:

(a) Arsine;

(b) Carbon monoxide;

(c) Hydrogen cyanide;

(d) Hydrogen sulfide;

(e) Phosphine; and

(f) Sulfur dioxide.

§ 148.420 Flammable gas analyzers.

When Table 148.10 of this part associates a material with a reference to a paragraph in this section, each vessel transporting the material, other than an unmanned barge, must have on board a gas analyzer appropriate for the flammable gas listed in that paragraph. At least two members of the crew must be knowledgeable in the use of the equipment. The equipment must be maintained in a condition ready for use, capable of measuring 0 to 100 percent LFL for the gas indicated, and calibrated in accordance with the instructions of its manufacturer. The atmosphere in the cargo hold must be tested before any person is allowed to enter. If flammable gases are detected, the space must be ventilated and retested before entry. The flammable gases for which the requirements of this section must be met are:

(a) Carbon monoxide;

(b) Hydrogen; and

(c) Methane.

§ 148.435 Electrical circuits in cargo holds.

During transport of a material that Table 148.10 of this part associates with a reference to this section, each electrical circuit terminating in a cargo hold containing the material must be electrically disconnected from the power source at a point outside of the cargo hold. The point of disconnection must be marked to prevent the circuit from being reenergized while the material is on board.

§ 148.445 Adjacent spaces.

When transporting a material that Table 148.10 of this part associates with a reference to this section, the following requirements must be met:

(a) Each space adjacent to a cargo hold must be ventilated by natural ventilation or by ventilation equipment safe for use in an explosive gas atmosphere.

(b) Each space adjacent to a cargo hold containing the material must be regularly monitored for the presence of the flammable gas indicated by reference to § 148.420 of this part. If the level of flammable gas in any space reaches 30 percent of the LFL, all electrical equipment that is not certified safe for use in an explosive gas atmosphere must be de-energized at a location outside of that space. This location must be labeled to prohibit reenergizing until the atmosphere in the space is tested and found to be less than 30 percent of the LFL.

(c) Each person who enters any space adjacent to a cargo hold or compartment containing the material must wear a self-contained breathing apparatus unless—

(1) The space has been tested, or is routinely monitored, for the appropriate flammable gas and oxygen;

(2) The level of flammable gas is less than 10 percent of the LFL; and

(3) The level of toxic gas, if required to be tested, is less than the TLV.

(d) No person may enter an adjacent space if the level of flammable gas is greater than 30 percent of the LFL. If

emergency entry is necessary, each person who enters the space must wear a self-contained breathing apparatus and caution must be exercised to ensure that no sparks are produced.

§ 148.450 Cargoes subject to liquefaction.

(a) This section applies only to cargoes identified in Table 148.10 of this part with a reference to this section and cargoes identified in the IMSBC Code (incorporated by reference, see § 148.8) as cargoes that may liquefy.

(b) This section does not apply to—

(1) Shipments by unmanned barge; or

(2) Cargoes of coal that have an average particle size of 10mm (.394 in.) or greater.

(c) Definitions as used in this section—

(1) *Cargo subject to liquefaction* means a material that is subject to moisture migration and subsequent liquefaction if shipped with moisture content in excess of the transportable moisture limit.

(2) *Moisture migration* is the movement of moisture by settling and consolidation of a material, which may result in the development of a flow state in the material.

(3) *Transportable moisture limit* or *TML* of a cargo that may liquefy is the maximum moisture content that is considered safe for carriage on vessels.

(d) Except on a vessel that is specially constructed or specially fitted for the purpose of carrying such cargoes (see also section 7 of the IMSBC Code, incorporated by reference, see § 148.8), a cargo subject to liquefaction may not be transported by vessel if its moisture content exceeds its TML.

(e) The shipper of a cargo subject to liquefaction must give the master the material's moisture content and TML.

(f) The master of a vessel shipping a cargo subject to liquefaction must ensure that—

(1) A cargo containing a liquid is not stowed in the same cargo space with a cargo subject to liquefaction; and

(2) Precautions are taken to prevent the entry of liquids into a cargo space containing a cargo subject to liquefaction.

(g) The moisture content and TML of a material may be determined by the tests described in Appendix 2, Section 1, of the IMSBC Code (incorporated by reference, see § 148.8).

Dated: October 4, 2010.

J.G. Lantz,

Director of Commercial Regulations and Standards, U.S. Coast Guard.

[FR Doc. 2010–25383 Filed 10–18–10; 8:45 am]

BILLING CODE 9110–04–P

Federal Register

Tuesday,
October 19, 2010

Part V

The President

Proclamation 8585—Italian American Heritage and Culture Month, 2010

Federal Register
Vol. 75, No. 201
Tuesday, October 19, 2010

Presidential Documents

Title 3—

The President

Proclamation 8585 of October 14, 2010

Italian American Heritage and Culture Month, 2010

By the President of the United States of America

A Proclamation

In the five centuries since Christopher Columbus, a son of Genoa, Italy, first set sail across the Atlantic Ocean, countless individuals have followed the course he charted to seek a new life in America. Since that time, generations of Italian Americans have helped shape our society and steer the course of our history. During Italian American Heritage and Culture Month, we recognize the rich heritage of Americans of Italian descent and celebrate their immeasurable contributions to our Nation.

Bound by enduring values of faith and family, Italian Americans have flourished in all areas of our public and economic life while preserving their proud Italian traditions. Upon arrival in the United States, the Italian American community faced racial, social, and religious discrimination. Yet, Italian Americans have persevered with hope and hard work to reach for the American dream and helped build our great country. As proud service members, they have also defended the liberty and integrity of the United States since the Revolutionary War.

Today, the legacy of these intrepid immigrants is found in the millions of American men, women, and children of Italian descent who strengthen and enrich our country. Italian Americans operate thriving businesses, teach our children, serve at all levels of government, and succeed in myriad occupations. Drawing on the courage and principles of their forebears, they lead in every facet of American life, dedicating their knowledge and skills to the growth of our country.

The Great Seal of the United States declares "out of many, one." As we forge new futures as a unified people, we must celebrate the unique and vibrant cultures that have written the American story. Many determined individuals have sought our shores as a beacon of hope and opportunity, and their spirit of limitless possibility and example of resolve continues to inspire and guide our Nation. As we honor the long history and vast contributions of Italian Americans, let us recommit to extending the promise of America that they embraced to future generations.

NOW, THEREFORE, I, BARACK OBAMA, President of the United States of America, by virtue of the authority vested in me by the Constitution and the laws of the United States, do hereby proclaim October 2010 as Italian American Heritage and Culture Month. I call upon all Americans to learn more about the history of Italian Americans, and to observe this month with appropriate programs and activities.

IN WITNESS WHEREOF, I have hereunto set my hand this fourteenth day of October, in the year of our Lord two thousand ten, and of the Independence of the United States of America the two hundred and thirty-fifth.

[FR Doc. 2010–26486
Filed 10–18–10; 11:15 am]
Billing code 3195–W1–P

Reader Aids

Federal Register

Vol. 75, No. 201

Tuesday, October 19, 2010

CUSTOMER SERVICE AND INFORMATION

Federal Register/Code of Federal Regulations	
General Information, indexes and other finding aids	**202–741–6000**
Laws	**741–6000**
Presidential Documents	
Executive orders and proclamations	**741–6000**
The United States Government Manual	**741–6000**
Other Services	
Electronic and on-line services (voice)	**741–6020**
Privacy Act Compilation	**741–6064**
Public Laws Update Service (numbers, dates, etc.)	**741–6043**
TTY for the deaf-and-hard-of-hearing	**741–6086**

ELECTRONIC RESEARCH

World Wide Web

Full text of the daily Federal Register, CFR and other publications is located at: **http://www.gpoaccess.gov/nara/index.html**

Federal Register information and research tools, including Public Inspection List, indexes, and links to GPO Access are located at: **http://www.archives.gov/federal__register**

E-mail

FEDREGTOC-L (Federal Register Table of Contents LISTSERV) is an open e-mail service that provides subscribers with a digital form of the Federal Register Table of Contents. The digital form of the Federal Register Table of Contents includes HTML and PDF links to the full text of each document.

To join or leave, go to **http://listserv.access.gpo.gov** and select *Online mailing list archives, FEDREGTOC-L, Join or leave the list (or change settings);* then follow the instructions.

PENS (Public Law Electronic Notification Service) is an e-mail service that notifies subscribers of recently enacted laws.

To subscribe, go to **http://listserv.gsa.gov/archives/publaws-l.html** and select *Join or leave the list (or change settings);* then follow the instructions.

FEDREGTOC-L and **PENS** are mailing lists only. We cannot respond to specific inquiries.

Reference questions. Send questions and comments about the Federal Register system to: **fedreg.info@nara.gov**

The Federal Register staff cannot interpret specific documents or regulations.

Reminders. Effective January 1, 2009, the Reminders, including Rules Going Into Effect and Comments Due Next Week, no longer appear in the Reader Aids section of the Federal Register. This information can be found online at **http://www.regulations.gov.**

CFR Checklist. Effective January 1, 2009, the CFR Checklist no longer appears in the Federal Register. This information can be found online at **http://bookstore.gpo.gov/.**

FEDERAL REGISTER PAGES AND DATE, OCTOBER

60567–61034 1
61034–61320 4
61321–61588 5
61589–61974 6
61975–62294 7
62295–62448 8
62449–62674 12
62675–63038 13
63039–63378 14
63379–63694 15
63695–64110 18
64111–64614 19

CFR PARTS AFFECTED DURING OCTOBER

At the end of each month, the Office of the Federal Register publishes separately a List of CFR Sections Affected (LSA), which lists parts and sections affected by documents published since the revision date of each title.

3 CFR

Proclamations:
8571 62295
8572 62297
8573 62299
8574 62301
8575 62303
8576 62305
8577 62307
8578 62449
8579 62451
8580 62453
8581 63035
8582 63037
8583 63691
8584 63693
8585 64613

Executive Orders:
13553 60567
13554 62313

Administrative Orders:
Memorandums:
Memorandum of September 29, 2010 61033
Memorandum of October 4, 2010 62309
Notices:
Notice of October 14, 2010 64109

5 CFR

870 60573
1201 61321

Proposed Rules:
831 60643
841 60643
842 60643
930 61998
1605 63106

7 CFR

319 62455
1219 61589
2902 63695

Proposed Rules:
6 62692
205 62693
319 62484
989 63724
1217 .....61002, 61025

9 CFR

77 60586

10 CFR

50 61321

Proposed Rules:
30 62330
32 62330
33 62330
34 62330
35 62330
36 62330
37 .....62330, 62694
39 62330
51 62330
70 63725
71 62330
73 .....62330, 62695
429 .....61361, 64173
430 64173
431 64173
433 63404
435 63404

12 CFR

25 61035
228 61035
261a 63703
345 61035
563e 61035

Proposed Rules:
380 64173
560 63107
704 60651
Ch. XIII 61653

13 CFR

121 .....61591, 61597, 61604, 62258
123 60588
124 62258
125 62258
126 62258
127 62258
134 62258

Proposed Rules:
107 63110
115 63419

14 CFR

39 .....60602, 60604, 60608, 60611, 60614, 61046, 61337, 61341, 61343, 61345, 61348, 61352, 61975, 61977, 61980, 61982, 61985, 61987, 61989, 62319, 63039, 63040, 63042, 63045, 63048, 63050, 63052, 63054, 63058, 63060, 63062, 63064, 64111
71 .....61609, 61610, 61611, 61993, 62457, 62458, 62459, 62460, 62461, 63066, 63706, 63708, 63709
91 61612
97 .....63710, 63712

Proposed Rules:
1 62640
39 .....60655, 60659, 60661, 60665, 60667, 60669, 61114, 61361, 61363, 61655, 61657, 61999, 62002, 62005, 62331, 62333, 62716, 63420, 63422, 63727

71 ..... 61660, 63730
91 62640
117 ..... 62486, 63424
120 62640
121 ..... 62486, 63424
135 62640
139 62008

15 CFR

748 62462
772 62675
774 62675
902 60868

16 CFR

1200 63067
Proposed Rules:
260 63552

17 CFR

44 63080
200 62466
241 60616
243 61050
249 64120
274 64120
Proposed Rules:
1 63732
37 63732
38 63732
39 ..... 63113, 63732
40 63732
140 63113
229 ..... 62718, 64182
230 64182
240 ..... 62718, 64182
249 ..... 62718, 64182
275 63753

18 CFR

806 60617
808 60617
Proposed Rules:
35 62023
260 61365

19 CFR

Proposed Rules:
210 60671

20 CFR

404 62676
416 62676
Ch. VI 63379
Proposed Rules:
404 62487
405 62487
416 62487
655 61578
701 63425

21 CFR

522 62468
529 63085
1306 61613

22 CFR

Proposed Rules:
62 60674

24 CFR

Proposed Rules:
203 62335

26 CFR

1 ..... 63380, 64072, 64123
31 64072
301 64072
602 64072
Proposed Rules:
1 64197

28 CFR

Proposed Rules:
2 62342

29 CFR

4022 63380
Proposed Rules:
1910 64216
1926 64216

30 CFR

201 61051
202 61051
203 61051
204 61051
206 61051
207 61051
208 61051
210 61051
212 61051
217 61051
218 61051
219 61051
220 61051
227 61051
228 61051
229 61051
241 61051
243 61051
250 ..... 63346, 63610
290 61051
1201 61051
1202 61051
1203 61051
1204 61051
1206 61051
1207 61051
1208 61051
1210 61051
1212 61051
1217 61051
1218 61051
1219 61051
1220 61051
1227 61051
1228 61051
1229 61051
1241 61051
1243 61051
1290 61051
Proposed Rules:
56 62024
57 62024
70 64412
71 64412
72 64412
75 64412
90 64412
926 61366

31 CFR

1 ..... 61994, 64147
103 63382
Proposed Rules:
1 62737

32 CFR

199 63383
323 61617
701 61618

33 CFR

117 ..... 61094, 62468, 62469, 63086, 63398, 63713, 63714
165 ..... 61096, 61099, 61354, 61619, 62320, 63086, 63714, 64147

34 CFR

Proposed Rules:
668 63763

36 CFR

2 64148
242 63088
Proposed Rules:
67 63428

37 CFR

Proposed Rules:
201 ..... 61116, 62345, 62488

38 CFR

3 ..... 61356, 61995
17 61621
Proposed Rules:
1 63120
2 63120
17 62348

40 CFR

52 ..... 60623, 62323, 62470, 63717, 64155
81 64162
112 63093
156 62323
261 ..... 60632, 61356
Proposed Rules:
26 62738
49 64221
52 ..... 61367, 61369, 62024, 62026, 62354, 63139, 64235
60 63260
63 61662
81 ..... 60680, 62026, 64241
85 62739
86 62739
122 62358
261 ..... 60689, 62040
300 63140
600 62739

41 CFR

Ch. 301 63103
301-10 63103
301-11 63103
301-50 63103
301-73 63103

42 CFR

110 63656
412 60640
413 60640
415 60640
424 60640
440 60640
441 60640
482 60640
485 60640
489 60640

43 CFR

3100 61624

44 CFR

64 63399
67 ..... 61358, 64165
Proposed Rules:
67 ..... 61371, 61373, 61377, 62048, 62057, 62061, 62750, 62751

45 CFR

162 62684
170 62686

46 CFR

97 64586
148 64586
389 62472

47 CFR

1 62924
2 62924
15 ..... 62476, 62924
25 62924
73 ..... 62690, 62924, 63402
79 61101
90 62924
Proposed Rules:
20 63764
73 ..... 63431, 63766
74 63766

48 CFR

Proposed Rules:
25 62069
216 60690
252 60690

49 CFR

395 61626
593 62482
Proposed Rules:
195 63774
227 61386
531 62739
533 62739

50 CFR

17 ..... 62192, 63898
18 61631
100 63088
600 62326
622 64171
635 62690
648 63721
660 ..... 60868, 61102
679 ..... 61638, 61639, 61642, 62482, 63104, 63402, 64172
Proposed Rules:
17 ..... 61664, 62070
21 60691
217 60694
218 64508
223 61872
224 ..... 61872, 61904
226 61690
622 ..... 62488, 63780, 63786
648 63791
660 60709

LIST OF PUBLIC LAWS

This is a continuing list of public bills from the current session of Congress which have become Federal laws. It may be used in conjunction with "P L U S" (Public Laws Update Service) on 202–741–6043. This list is also available online at *http://www.archives.gov/federal-register/laws.html*.

The text of laws is not published in the **Federal Register** but may be ordered in "slip law" (individual pamphlet) form from the Superintendent of Documents, U.S. Government Printing Office, Washington, DC 20402 (phone, 202–512–1808). The text will also be made available on the Internet from GPO Access at *http://www.gpoaccess.gov/plaws/index.html*. Some laws may not yet be available.

H.R. 946/P.L. 111–274
Plain Writing Act of 2010 (Oct. 13, 2010; 124 Stat. 2861)

H.R. 3219/P.L. 111–275
Veterans' Benefits Act of 2010 (Oct. 13, 2010; 124 Stat. 2864)

H.R. 4543/P.L. 111–276
To designate the facility of the United States Postal Service located at 4285 Payne Avenue in San Jose, California, as the "Anthony J. Cortese Post Office Building". (Oct. 13, 2010; 124 Stat. 2899)

H.R. 5341/P.L. 111–277
To designate the facility of the United States Postal Service located at 100 Orndorf Drive in Brighton, Michigan, as the "Joyce Rogers Post Office Building". (Oct. 13, 2010; 124 Stat. 2900)

H.R. 5390/P.L. 111–278
To designate the facility of the United States Postal Service located at 13301 Smith Road in Cleveland, Ohio, as the "David John Donafee Post Office Building". (Oct. 13, 2010; 124 Stat. 2901)

H.R. 5450/P.L. 111–279
To designate the facility of the United States Postal Service located at 3894 Crenshaw Boulevard in Los Angeles, California, as the "Tom Bradley Post Office Building". (Oct. 13, 2010; 124 Stat. 2902)

H.R. 6200/P.L. 111–280
WIPA and PABSS Extension Act of 2010 (Oct. 13, 2010; 124 Stat. 2903)

Last List October 15, 2010

Public Laws Electronic Notification Service (PENS)

PENS is a free electronic mail notification service of newly enacted public laws. To subscribe, go to *http://listserv.gsa.gov/archives/publaws-l.html*

Note: This service is strictly for E-mail notification of new laws. The text of laws is not available through this service. **PENS** cannot respond to specific inquiries sent to this address.