AUTHENTICATED
U.S. GOVERNMENT
INFORMATION
GPO

# FEDERAL REGISTER

Vol. 76 Friday,
No. 29 February 11, 2011

Part VI

## Environmental Protection Agency

40 CFR Parts 50, 53 and 58
National Ambient Air Quality Standards for Carbon Monoxide; Proposed Rule

**ENVIRONMENTAL PROTECTION AGENCY**

**40 CFR Parts 50, 53 and 58**

**[EPA–HQ–OAR–2008–0015; FRL–9261–4; 2060–AI43]**

## National Ambient Air Quality Standards for Carbon Monoxide

**AGENCY:** Environmental Protection Agency (EPA).

**ACTION:** Proposed rule.

**SUMMARY:** Based on its review of the air quality criteria and the national ambient air quality standards (NAAQS) for carbon monoxide (CO), EPA is proposing to retain the current standards. EPA is also proposing changes to the ambient air monitoring requirements for CO including those related to network design.

**DATES:** Comments must be received on or before April 12, 2011.

*Public Hearings:* If, by February 18, 2011, EPA receives a request from a member of the public to speak at a public hearing concerning the proposed regulation, we will hold a public hearing on February 28, 2011 in Arlington, Virginia.

**ADDRESSES:** Submit your comments, identified by Docket ID No. EPA–HQ–OAR–2008–0015 by one of the following methods:

- *http://www.regulations.gov:* Follow the on-line instructions for submitting comments.
- *E-mail: a-and-r-Docket@epa.gov.*
- *Fax:* 202–566–9744.
- *Mail:* Docket No. EPA–HQ–OAR–2008–0015, Environmental Protection Agency, Mail code 6102T, 1200 Pennsylvania Ave., NW., Washington, DC 20460. Please include a total of two copies.
- *Hand Delivery:* Docket No. EPA–HQ–OAR–2008–0015, Environmental Protection Agency, EPA West, Room 3334, 1301 Constitution Ave., NW., Washington, DC. Such deliveries are only accepted during the Docket's normal hours of operation, and special arrangements should be made for deliveries of boxed information.

*Instructions:* Direct your comments to Docket ID No. EPA–HQ–OAR–2008–0015. EPA's policy is that all comments received will be included in the public docket without change and may be made available online at *http://www.regulations.gov,* including any personal information provided, unless the comment includes information claimed to be Confidential Business Information (CBI) or other information whose disclosure is restricted by statute. Do not submit information that you consider to be CBI or otherwise protected through *http://www.regulations.gov* or e-mail. The *http://www.regulations.gov* Web site is an "anonymous access" system, which means EPA will not know your identity or contact information unless you provide it in the body of your comment. If you send an e-mail comment directly to EPA without going through www.regulations.gov your e-mail address will be automatically captured and included as part of the comment that is placed in the public docket and made available on the Internet. If you submit an electronic comment, EPA recommends that you include your name and other contact information in the body of your comment and with any disk or CD–ROM you submit. If EPA cannot read your comment due to technical difficulties and cannot contact you for clarification, EPA may not be able to consider your comment. Electronic files should avoid the use of special characters, any form of encryption, and be free of any defects or viruses. For additional information about EPA's public docket visit the EPA Docket Center homepage at *http://www.epa.gov/epahome/dockets.htm.*

*Public Hearing.* If a public hearing is held, it will be held at the U.S. Environmental Protection Agency Conference Center, First Floor Conference Center South, One Potomac Yard, 2777 S. Crystal Drive, Arlington, VA 22202. All visitors will need to go through security and present a valid photo identification, such as a driver's license. To request a public hearing or information pertaining to a public hearing, contact Ms. Jan King, Health and Environmental Impacts Division, Office of Air Quality Planning and Standards (C504–02), Environmental Protection Agency, Research Triangle Park, North Carolina 27711; telephone number (919) 541– 5665; fax number (919) 541–2664; e-mail address: *king.jan@epa.gov. See* the **SUPPLEMENTARY INFORMATION** for further information about a possible public hearing.

*Docket:* All documents in the docket are listed in the *http://www.regulations.gov* index. Although listed in the index, some information is not publicly available, *e.g.,* CBI or other information whose disclosure is restricted by statute. Certain other material, such as copyrighted material, will be publicly available only in hard copy. Publicly available docket materials are available either electronically in *http://www.regulations.gov* or in hard copy at the Air and Radiation Docket and Information Center, EPA/DC, EPA West, Room 3334, 1301 Constitution Ave., NW., Washington, DC. The Public Reading Room is open from 8:30 a.m. to 4:30 p.m., Monday through Friday, excluding legal holidays. The telephone number for the Public Reading Room is (202) 566–1744 and the telephone number for the Air and Radiation Docket and Information Center is (202) 566–1742.

**FOR FURTHER INFORMATION CONTACT:** Dr. Deirdre Murphy, Health and Environmental Impacts Division, Office of Air Quality Planning and Standards, U.S. Environmental Protection Agency, Mail code C504–06, Research Triangle Park, NC 27711; telephone: 919–541–0729; fax: 919–541–0237; e-mail: *murphy.deirdre@epa.gov.* For further information specifically with regard to section IV of this notice, contact Mr. Nealson Watkins, Air Quality Analysis Division, Office of Air Quality Planning and Standards, U.S. Environmental Protection Agency, Mail code C304–06, Research Triangle Park, NC 27711; telephone: 919–541–5522; fax: 919–541–1903; e-mail: *watkins.nealson@epa.gov.* To request a public hearing or information pertaining to a public hearing, contact Ms. Jan King, Health and Environmental Impacts Division, Office of Air Quality Planning and Standards (C504–02), Environmental Protection Agency, Research Triangle Park, North Carolina 27711; telephone number (919) 541–5665; fax number (919) 541–2664; e-mail address: *king.jan@epa.gov.*

**SUPPLEMENTARY INFORMATION:**

### General Information

*What should I consider as I prepare my comments for EPA?*

1. *Submitting CBI.* Do not submit this information to EPA through *http://www.regulations.gov* or e-mail. Clearly mark the part or all of the information that you claim to be CBI. For CBI information in a disk or CD ROM that you mail to EPA, mark the outside of the disk or CD ROM as CBI and then identify electronically within the disk or CD ROM the specific information that is claimed as CBI. In addition to one complete version of the comment that includes information claimed as CBI, a copy of the comment that does not contain the information claimed as CBI must be submitted for inclusion in the public docket. Information so marked will not be disclosed except in accordance with procedures set forth in 40 CFR part 2.

2. *Tips for Preparing Your Comments.* When submitting comments, remember to:

• Identify the rulemaking by docket number and other identifying information (subject heading, **Federal Register** date and page number).
• Follow directions—the agency may ask you to respond to specific questions or organize comments by referencing a Code of Federal Regulations (CFR) part or section number.
• Explain why you agree or disagree, suggest alternatives, and substitute language for your requested changes.
• Describe any assumptions and provide any technical information and/or data that you used.
• Provide specific examples to illustrate your concerns, and suggest alternatives.
• Explain your views as clearly as possible, avoiding the use of profanity or personal threats.
• Make sure to submit your comments by the comment period deadline identified.

*Availability of Related Information*

A number of the documents that are relevant to this rulemaking are available through EPA's Office of Air Quality Planning and Standards (OAQPS) Technology Transfer Network (TTN) Web site at *http://www.epa.gov/ttn/naaqs/standards/co/s_co_index.html.* These documents include the *Plan for Review of the National Ambient Air Quality Standards for Carbon Monoxide* (Integrated Review Plan or IRP, USEPA, 2008), available at *http://www.epa.gov/ttn/naaqs/standards/co/s_co_cr_pd.html,* the *Integrated Science Assessment for Carbon Monoxide* (USEPA, 2010a), available at *http://www.epa.gov/ttn/naaqs/standards/co/s_co_cr_isa.html,* the *Quantitative Risk and Exposure Assessment for Carbon Monoxide—Amended* (USEPA, 2010b), available at *http://www.epa.gov/ttn/naaqs/standards/co/s_co_cr_rea.html,* and the *Policy Assessment for the Review of the Carbon Monoxide National Ambient Air Quality Standards* (USEPA, 2010c), available at *http://www.epa.gov/ttn/naaqs/standards/co/s_co_cr_pa.html.* These and other related documents are also available for inspection and copying in the EPA docket identified above.

*How can I find information about a possible public hearing?*

To request a public hearing or information pertaining to a public hearing on this document, contact Ms. Jan King, Health and Environmental Impacts Division, Office of Air Quality Planning and Standards (C504–02), Environmental Protection Agency, Research Triangle Park, North Carolina 27711; telephone number (919) 541–5665; fax number (919) 541–2664; e-mail address: *king.jan@epa.gov.* If a request for a public hearing is received by February 18, 2011, information about the hearing will be posted prior to the hearing on EPA's Web site for carbon monoxide regulatory actions at *http://www.epa.gov/airquality/urbanair/co/.*

**Table of Contents**

The following topics are discussed in this preamble:

I. Background
A. Legislative Requirements
B. Related Carbon Monoxide Control Programs
C. Review of the Air Quality Criteria and Standards for Carbon Monoxide
II. Rationale for Proposed Decisions on the Primary Standards
A. Air Quality Information
1. Anthropogenic Sources and Emissions of Carbon Monoxide
2. Ambient Concentrations
B. Health Effects Information
1. Carboxyhemoglobin as Biomarker and Mechanism of Toxicity
2. Nature of Effects
3. At-Risk Populations
4. Potential Impacts on Public Health
C. Human Exposure and Dose Assessment
1. Summary of Design Aspects
2. Key Limitations and Uncertainties
D. Conclusions on Adequacy of the Current Standards
1. Approach
2. Evidence-Based and Exposure/Dose-Based Considerations in the Policy Assessment
3. CASAC Advice
4. Administrator's Proposed Conclusions Concerning Adequacy
E. Summary of Proposed Decisions on Primary Standards
III. Consideration of a Secondary Standard
A. Background and Considerations in Previous Reviews
B. Evidence-Based Considerations in the Policy Assessment
C. CASAC Advice
D. Administrator's Proposed Conclusions Concerning a Secondary Standard
IV. Proposed Amendments to Ambient Monitoring Requirements
A. Monitoring Methods
1. Proposed Changes to Part 50, Appendix C
2. Proposed Changes to Part 53
3. Implications for Air Monitoring Networks
B. Network Design
1. Background
2. On-Road Mobile Sources
3. Near-Road Environment
4. Urban Downtown Areas and Urban Street Canyons
5. Meteorological and Topographical Influences
6. Proposed Changes
7. Microscale Carbon Monoxide Monitor Siting Criteria
V. Statutory and Executive Order Reviews
A. Executive Order 12866: Regulatory Planning and Review
B. Paperwork Reduction Act
C. Regulatory Flexibility Act
D. Unfunded Mandates Reform Act
E. Executive Order 13132: Federalism
F. Executive Order 13175: Consultation and Coordination with Indian Tribal Governments
G. Executive Order 13045: Protection of Children from Environmental Health and Safety Risks
H. Executive Order 13211: Actions that Significantly Affect Energy Supply, Distribution or Use
I. National Technology Transfer and Advancement Act
J. Executive Order 12898: Federal Actions to Address Environmental Justice in Minority Populations and Low-Income Populations References

## I. Background

### *A. Legislative Requirements*

Two sections of the Clean Air Act (CAA) govern the establishment and revision of the NAAQS. Section 108 (42 U.S.C. 7408) directs the Administrator to identify and list "air pollutant[s]" that in her "judgment, cause or contribute to air pollution which may reasonably be anticipated to endanger public health or welfare" and satisfy two other criteria, including "whose presence * * * in the ambient air results from numerous or diverse mobile or stationary sources" and to issue air quality criteria for those that are listed. Air quality criteria are intended to "accurately reflect the latest scientific knowledge useful in indicating the kind and extent of all identifiable effects on public health or welfare which may be expected from the presence of [a] pollutant in the ambient air * * * ."

Section 109 (42 U.S.C. 7409) directs the Administrator to propose and promulgate "primary" and "secondary" NAAQS for pollutants for which air quality criteria are issued. Section 109(b)(1) defines a primary standard as one "the attainment and maintenance of which in the judgment of the Administrator, based on such criteria and allowing an adequate margin of safety, are requisite to protect the public health." [1] A secondary standard, as defined in section 109(b)(2), must "specify a level of air quality the attainment and maintenance of which, in the judgment of the Administrator, based on such criteria, is requisite to protect the public welfare from any known or anticipated adverse effects

[1] The legislative history of section 109 indicates that a primary standard is to be set at "the maximum permissible ambient air level * * * which will protect the health of any [sensitive] group of the population," and that for this purpose "reference should be made to a representative sample of persons comprising the sensitive group rather than to a single person in such a group" [S. Rep. No. 91–1196, 91st Cong., 2d Sess. 10 (1970)].

associated with the presence of such air pollutant in the ambient air."[2]

The requirement that primary standards include an adequate margin of safety was intended to address uncertainties associated with inconclusive scientific and technical information available at the time of standard setting. It was also intended to provide a reasonable degree of protection against hazards that research has not yet identified. *Lead Industries Association* v. *EPA,* 647 F.2d 1130, 1154 (DC Cir 1980), *cert. denied,* 449 U.S. 1042 (1980); *American Petroleum Institute* v. *Costle,* 665 F.2d 1176, 1186 (DC Cir. 1981), *cert. denied,* 455 U.S. 1034 (1982). Both kinds of uncertainties are components of the risk associated with pollution at levels below those at which human health effects can be said to occur with reasonable scientific certainty. Thus, in selecting primary standards that include an adequate margin of safety, the Administrator is seeking not only to prevent pollution levels that have been demonstrated to be harmful but also to prevent lower pollution levels that may pose an unacceptable risk of harm, even if the risk is not precisely identified as to nature or degree. The CAA does not require the Administrator to establish a primary NAAQS at a zero-risk level or at background concentration levels, *see Lead Industries Association* v. *EPA,* 647 F.2d at 1156 n. 51, but rather at a level that reduces risk sufficiently so as to protect public health with an adequate margin of safety.

In addressing the requirement for an adequate margin of safety, EPA considers such factors as the nature and severity of the health effects involved, the size of the population(s) at risk, and the kind and degree of the uncertainties that must be addressed. The selection of any particular approach to providing an adequate margin of safety is a policy choice left specifically to the Administrator's judgment. *Lead Industries Association* v. *EPA,* 647 F.2d at 1161–62; *Whitman* v. *American Trucking Associations,* 531 U.S. 457, 495 (2001).

In setting standards that are "requisite" to protect public health and welfare, as provided in section 109(b), EPA's task is to establish standards that are neither more nor less stringent than necessary for these purposes. *Whitman* v. *American Trucking Associations,* 531 U.S. 457, 473. In establishing "requisite" primary and secondary standards, EPA may not consider the costs of implementing the standards. *Id.* at 471.

Section 109(d)(1) of the CAA requires that "[n]ot later than December 31, 1980, and at 5-year intervals thereafter, the Administrator shall complete a thorough review of the criteria published under section 108 and the national ambient air quality standards * * * and shall make such revisions in such criteria and standards and promulgate such new standards as may be appropriate * * *" Section 109(d)(2) requires that an independent scientific review committee "shall complete a review of the criteria * * * and the national primary and secondary ambient air quality standards * * * and shall recommend to the Administrator any new * * * standards and revisions of existing criteria and standards as may be appropriate. * * *" This independent review function is performed by the Clean Air Scientific Advisory Committee (CASAC).

### *B. Related Carbon Monoxide Control Programs*

States are primarily responsible for ensuring attainment and maintenance of ambient air quality standards once EPA has established them. Under section 110 of the Act, and related provisions, States are to submit, for EPA approval, State implementation plans (SIPs) that provide for the attainment and maintenance of such standards through control programs directed to sources of the pollutants involved. The States, in conjunction with EPA, also administer the prevention of significant deterioration program. *See* CAA sections 160–169. In addition, Federal programs provide for nationwide reductions in emissions of these and other air pollutants through the Federal motor vehicle and motor vehicle fuel control program under title II of the Act, (CAA sections 202–250) which involves controls for emissions from moving sources and controls for the fuels used by these sources; new source performance standards under section 111; and title IV of the Act (CAA sections 402–416), which specifically provides for major reductions in CO emissions.

### *C. Review of the Air Quality Criteria and Standards for Carbon Monoxide*

EPA initially established NAAQS for CO on April 30, 1971. The primary standards were established to protect against the occurrence of carboxyhemoglobin levels in human blood associated with health effects of concern. The standards were set at 9 parts per million (ppm), as an 8-hour average and 35 ppm, as a 1-hour average, neither to be exceeded more than once per year (36 FR 8186). In the 1971 decision, the Administrator judged that attainment of these standards would provide the requisite protection of public health with an adequate margin of safety and would also provide requisite protection against known and anticipated adverse effects on public welfare, and accordingly set the secondary (welfare-based) standards identical to the primary (health-based) standards.

In 1985, EPA concluded its first periodic review of the criteria and standards for CO (50 FR 37484). In that review, EPA updated the scientific criteria upon which the initial CO standards were based through the publication of the 1979 *Air Quality Criteria Document for Carbon Monoxide* (AQCD; USEPA, 1979a) and prepared a Staff Paper (USEPA, 1979b), which, along with the 1979 AQCD, served as the basis for the development of the notice of proposed rulemaking which was published on August 18, 1980 (45 FR 55066). Delays due to uncertainties regarding the scientific basis for the final decision resulted in EPA's announcing a second public comment period (47 FR 26407). Following substantial reexamination of the scientific data, EPA prepared an Addendum to the 1979 AQCD (USEPA, 1984a) and an updated Staff Paper (USEPA, 1984b). Following review by CASAC (Lippmann, 1984), EPA announced its decision not to revise the existing primary standard and to revoke the secondary standard for CO on September 13, 1985, due to a lack of evidence of effects on public welfare at ambient concentrations (50 FR 37484).

On August 1, 1994, EPA concluded its second periodic review of the criteria and standards for CO by deciding that revisions to the CO NAAQS were not warranted at that time (59 FR 38906). This decision reflected EPA's review of relevant scientific information assembled since the last review, as contained in the 1991 AQCD (USEPA, 1991) and the 1992 Staff Paper (USEPA, 1992). Thus, the primary standards were retained at 9 ppm with an 8-hour averaging time, and 35 ppm with a 1-hour averaging time, neither to be exceeded more than once per year (59 FR 38906).

EPA initiated the next periodic review in 1997 and the final 2000 AQCD (U.S. EPA, 2000) was released in August 2000. After release of the AQCD, Congress requested that the National Research Council (NRC) review the

[2] Welfare effects as defined in section 302(h) (42 U.S.C. 7602(h)) include, but are not limited to, "effects on soils, water, crops, vegetation, man-made materials, animals, wildlife, weather, visibility, and climate, damage to and deterioration of property, and hazards to transportation, as well as effects on economic values and on personal comfort and well-being."

impact of meteorology and topography on ambient CO concentrations in high altitude and extreme cold regions of the U.S. The NRC convened the Committee on Carbon Monoxide Episodes in Meteorological and Topographical Problem Areas, which focused on Fairbanks, Alaska as a case-study.

A final report, "Managing Carbon Monoxide Pollution in Meteorological and Topographical Problem Areas," was published in 2003 (NRC, 2003) and offered a wide range of recommendations regarding management of CO air pollution, cold start emissions standards, oxygenated fuels, and CO monitoring. Following completion of the NRC report, EPA did not conduct rulemaking to complete the review.

On September 13, 2007, EPA issued a call for information from the public (72 FR 52369) requesting the submission of recent scientific information on specified topics. A workshop was held on January 28–29, 2008 (73 FR 2490) to discuss policy-relevant scientific and technical information to inform EPA's planning for the CO NAAQS review. Following the workshop, a draft Integrated Review Plan (IRP) (USEPA, 2008a) was made available in March 2008 for public comment and was discussed by the CASAC via a publicly accessible teleconference consultation on April 8, 2008 (73 FR 12998; Henderson, 2008). EPA made the final IRP available in August 2008 (USEPA, 2008b).

In preparing the *Integrated Science Assessment for Carbon Monoxide* (ISA or Integrated Science Assessment), EPA held an authors' teleconference in November 2008 with invited scientific experts to discuss preliminary draft materials prepared as part of the ongoing development of the CO ISA and its supplementary annexes. The first draft ISA (USEPA, 2009a) was made available for public review on March 12, 2009 (74 FR 10734) and reviewed by CASAC at a meeting held on May 12–13, 2009 (74 FR 15265). A second draft ISA (USEPA, 2009b) was released for CASAC and public review on September 23, 2009 (74 FR 48536), and it was reviewed by CASAC at a meeting held on November 16–17, 2009 (74 FR 54042). The final ISA was released in January 2010 (USEPA, 2010a).

In May 2009, OAQPS released a draft planning document, the draft Scope and Methods Plan (USEPA, 2009c), for consultation with CASAC and public review at the CASAC meeting held on May 12–13, 2009. Taking into consideration comments on the draft Plan from CASAC (Brain, 2009) and the public, OAQPS staff developed and released for CASAC review and public comment a first draft Risk and Exposure Assessment (REA) (USEPA, 2009d), which was reviewed at the CASAC meeting held on November 16–17, 2009. Subsequent to that meeting and taking into consideration comments from CASAC (Brain and Samet, 2010a) and public comments on the first draft REA, a second draft REA (USEPA, 2010d) was released for CASAC review and public comment in February 2010, and reviewed at a CASAC meeting held on March 22–23, 2010. Drawing from information in the final CO ISA and the second draft REA, EPA released a draft Policy Assessment (PA) (USEPA, 2010e) in early March, 2010 for CASAC review and public comment at the same meeting. Taking into consideration comments on the second draft REA and the draft PA from CASAC (Brain and Samet, 2010b, 2010c) and the public, staff completed the quantitative assessments which are presented in the final REA (USEPA, 2010b). Staff additionally took into consideration those comments and the final REA analyses in completing the final Policy Assessment (USEPA, 2010c) which was released in October, 2010.

The schedule for completion of this review is governed by a court order resolving a lawsuit filed in March 2003 by a group of plaintiffs who alleged that EPA had failed to perform its mandatory duty, under section 109(d)(1), to complete a review of the CO NAAQS within the period provided by statute. The court order that governs this review, entered by the court on November 14, 2008 and amended on August 30, 2010, provides that EPA will sign, for publication, notices of proposed and final rulemaking concerning its review of the CO NAAQS no later than January 28, 2011 and August 12, 2011, respectively.

This action presents the Administrator's proposed decisions on the current CO standards. Throughout this preamble a number of conclusions, findings, and determinations proposed by the Administrator are noted. Although they identify the reasoning that supports this proposal, they are not intended to be final or conclusive in nature. The EPA invites general, specific, and technical comments on all issues involved with this proposal, including all such proposed judgments, conclusions, findings, and determinations.

## II. Rationale for Proposed Decisions on the Primary Standards

This section presents the rationale for the Administrator's proposed decision to retain the existing CO primary standards.[3] As discussed more fully below, this rationale is based on a thorough review, in the Integrated Science Assessment, of the latest scientific information, published through mid-2009, on human health effects associated with the presence of CO in the ambient air. This proposal also takes into account: (1) Staff assessments of the most policy-relevant information in the ISA and staff analyses of air quality, human exposure and health risks presented in the REA and the Policy Assessment, upon which staff conclusions regarding appropriate considerations in this review are based; (2) CASAC advice and recommendations, as reflected in discussions of drafts of the ISA, REA and PA at public meetings, in separate written comments, and in CASAC's letters to the Administrator; and (3) public comments received during the development of these documents, either in connection with CASAC meetings or separately.

In presenting the rationale and its foundations, this section begins with a summary of current air quality information in section II.A. Section II.B summarizes the body of evidence supporting this rationale, including key health endpoints associated with exposure to ambient CO. This rationale also draws upon the results of the quantitative exposure and risk assessments, discussed below in section II.C. Evidence- and exposure/dose-based considerations that form the basis for the Administrator's proposed decisions on the adequacy of the current standard are discussed in section II.D.2.a and II.D.2.b, respectively. CASAC advice is summarized in section II.D.3. The Administrator's proposed conclusions are presented in section II.D.4.

### *A. Air Quality Information*

This section provides a general overview of the current air quality conditions to provide context for this consideration of the current standards for carbon monoxide. A more comprehensive discussion of air quality information is provided in the ISA (ISA, sections 3.2 and 3.4) and summarized in the Policy Assessment, and a more detailed discussion of aspects particularly relevant to the exposure assessment is provided in the REA (REA, chapter 3).

[3] As explained below in section IV.A, EPA is proposing to repromulgate the Federal reference method for CO, as set forth in Appendix C of 40 CFR part 50. Consistent with EPA's proposed decision to retain the standards, the recodification clarifies and updates the text of the FRM, but does not make substantive changes to it.

1. Anthropogenic Sources and Emissions of Carbon Monoxide

Carbon monoxide in ambient air is formed primarily by the incomplete combustion of carbon-containing fuels and by photochemical reactions in the atmosphere. As a result of the combustion conditions, CO emissions from large fossil-fueled power plants are typically very low because optimized fuel consumption conditions make boiler combustion highly efficient. In contrast, internal combustion engines used in many mobile sources have widely varying operating conditions. Therefore, higher and more varying CO formation results from the operation of these mobile sources (ISA, section 3.2). As with previous reviews of the CO NAAQS, mobile sources continue to be a significant source sector for CO in ambient air, as indicated by national emissions estimates from on-road vehicles, which accounted for approximately half of the total CO emissions by individual source sectors in 2002 (ISA, Figure 3–1).[4] National-scale anthropogenic CO emissions have decreased by approximately 45% between 1990 and 2005, with nearly all of this national-scale reduction coming from reductions in on-road vehicle emissions (ISA, Figure 3–2; PA, Figure 1–1; 2005 NEI[5]). The role of mobile source emissions is evident in the spatial and temporal patterns of ambient CO concentrations, which are heavily influenced by the patterns associated with mobile source emissions (ISA, chapter 3). In some metropolitan areas of the U.S., due to their greater motor vehicle density relative to rural areas, on-road mobile source contribution to all ambient CO emissions was estimated to be as high as approximately 75%, based on the 2002 National Emissions Inventory (ISA, p. 3–2). However, the mobile source contribution can vary widely in specific areas. As an example, 2002 NEI estimates of on-road mobile source emissions in urban Denver County, Colorado are about 74% of total CO emissions and emissions from all mobile sources (on-road and non-road combined) are estimated to contribute about 98% (ISA, section 3.2.1). In contrast, 2002 NEI estimates of on-road CO emissions were just 20% of the total for rural Garfield County, Colorado[6] (ISA, chapter 3, Figure 3–6).

2. Ambient Concentrations

As described in section II.A.1 above, mobile source emissions are major contributors to CO emissions in urban areas, with corresponding influence on ambient CO concentrations and associated concentration gradients, with highest ambient concentrations occurring on or nearest roadways, particularly highly travelled roadways, and lowest concentrations in more distant locations (ISA, section 3.5.1.3; REA, section 3.1.3). For example, as described in the ISA CO concentrations measured within 20 meters of an interstate highway can range from 2 to 10 times greater than CO concentrations measured as far as 300 meters from a major road, possibly influenced by wind direction and on-road vehicle density (ISA, section 3.5.1.3, Figures 3–29 and 3–30; Zhu *et al.,* 2002; Baldauf *et al.,* 2008a,b). Additionally, the role of motor vehicles in influencing ambient concentrations contributes to the occurrence of diurnal variation in concentrations reflecting rush hour patterns (ISA, 3.5.2.2; REA, p. 3–8). The influence of motor vehicle emissions on ambient concentrations contributes to the important role of in-vehicle microenvironments in influencing short-term ambient CO exposures, as described in more detail in the REA and summarized in sections II.C.1 and II.D.2 below.

In 2009, approximately 350 ambient monitoring stations across the U.S. reported continuous hourly averages of CO concentrations to EPA's Air Quality System.[7] For the most recent period for which air quality status relative to the CO NAAQS has been analyzed (2009), all areas of the U.S. meet both CO NAAQS.[8] As of September 27, 2010, there are no areas designated as nonattainment for the CO NAAQS (75 FR 59090). Since 2005, one area (Jefferson County, Alabama) has failed to meet the 8-hour standard during some periods. Large CO emissions sources in this area are associated with an integrated iron and steel facility. As described in section 1.3.3 of the Policy Assessment, 2009 concentrations of CO at most currently operating monitors are well below the current standards, with just a few locations having concentrations near the controlling 8-hour standard of 9 ppm as a second maximum 8-hour average.[9] Of the counties with monitoring sites in 2009, sites in 3 counties reported second maximum 8-hour average concentrations at or above 6.4 ppm (PA, Figure 1–2).

The current levels of ambient CO across the U.S. reflect the steady declines in ambient concentrations that have occurred over the past several years. Both the second highest 1-hour and 8-hour concentrations have significantly declined since the last review. At the set of sites across the U.S. that have been continuously monitored since 1990 the average second highest 8-hour and 1-hour concentrations have declined by nearly 70% (PA, section 1.3.3).

*B. Health Effects Information*

1. Carboxyhemoglobin as Biomarker and Mechanism of Toxicity

As discussed in the Integrated Science Assessment, in this review, as in the past (*e.g.,* USEPA, 2000; USEPA, 1991), the best characterized mechanism of action of CO is tissue hypoxia caused by binding of CO to hemoglobin to form carboxyhemoglobin (COHb). Accordingly, COHb level in blood continues to be well recognized as an important internal dose metric and the one most commonly used in evaluating CO exposure and the potential for health effects (ISA, p. 2–4, sections 4.1, 4.2, 5.1.1; 1991 AQCD, 2000 AQCD, 2010 ISA).

Increasing levels of COHb with subsequent decrease in oxygen availability for organs and tissues are of

[4] EPA compiles CO emissions estimates for the U.S. in the National Emissions Inventory (NEI). Estimates come from various sources and different data sources use different data collection methods, most of which are based on engineering calculations and estimates rather than measurements. Although these estimates are generated using well-established approaches, uncertainties are inherent in the emission factors and models used to represent sources for which emissions have not been directly measured. Uncertainties vary by source category, season and region (ISA, section 3.2.1). At the time of the ISA development, the 2002 NEI was providing the most recent publicly available CO emissions estimates for the U.S. that meet EPA's data quality assurance objectives. Such estimates are now available from the 2005 NEI.

[5] The emissions trends information in this statement is drawn from recently available 2005 National Emissions Inventory estimates (*http://www.epa.gov/ttn/chief/net/2005inventory.html,* Tier Summaries) and 1990 and other estimates, available at *http://www.epa.gov/ttn/chief/net/critsummary.html* Figure 3–2 from the ISA provides estimates through 2002.

[6] The 2002 National Emissions Inventory estimate for on-road emissions in Garfield County is 20,000 tons, and the total emissions from all sources is estimated to be 98,831 (99K) tons. Thus, in this example the on-road vehicles accounts for 20.2% of the total emissions (ISA, section 3, figure 3–6). In contrast, the 2002 Denver County on-road emissions account for 74% of the total for the county which is estimated at approximately 180,000 tons.

[7] *http://www.epa.gov/ttn/airs/airsaqs/.*

[8] The air quality status in areas monitored relative to the CO NAAQS is provided at *http://www.epa.gov/air/airtrends/values.html.*

[9] As the form of the CO 8-hour standard is not-to-be-exceeded more than once per year, the second highest 8-hour average in a year is the design value for this standard. Based on the current rounding convention, the standard is met if the CO concentrations over a year result in a design value at or below 9.4 ppm. Additional information is available at *http://www.epa.gov/airtrends/values.html.*

concern in people with pre-existing heart disease who have compromised compensatory mechanisms (*e.g.,* lack of capacity to increase blood flow in response to increased CO). The integrative review of health effects of CO indicates that "the clearest evidence indicates that individuals with [coronary artery disease] are most susceptible to an increase in CO-induced health effects" (ISA, section 5.7.8) and the evidence continues to support levels of COHb in the blood as the most useful indicator of CO exposure that is related to the health effects of CO of major concern.

Carboxyhemoglobin occurs in the blood due to endogenous CO production from biochemical reactions associated with normal breakdown of heme proteins, as well as in response to inhaled (exogenous) CO exposures (ISA, section 4.5). The production of endogenous CO and levels of endogenous COHb vary with several physiological characteristics (*e.g.,* slower COHb elimination with increasing age), as well as some disease states, which can lead to higher endogenous levels in some individuals (ISA, section 4.5). The amount of COHb formed in response to exogenous CO is dependent on the CO concentration and duration of exposure, exercise (which increases the amount of air removed and replaced per unit of time for gas exchange), the pulmonary diffusing capacity for CO, ambient pressure, health status, and the specific metabolism of the exposed individual (ISA, chapter 4; 2000 AQCD, chapter 5). The formation of COHb is a reversible process, but the high affinity of CO for hemoglobin, which affects the elimination half-time for COHb, can lead to increased COHb levels in some circumstances.

As discussed in the REA, exposure to CO in ambient air can occur outdoors as well as through infiltration of ambient air into indoor locations (REA, section 2.3). Additionally, indoor sources such as gas stoves and tobacco smoke can, where present, be important contributors to total CO exposure and can result in much greater CO exposures and associated COHb levels than those associated with ambient sources (ISA, section 3.6.5.2).[10] For example, indoor source-related exposures, such as faulty furnaces or other combustion appliances, have been estimated in the past to lead to COHb levels on the order of twice as high as those short-term exposures to ambient CO considered more likely to be encountered by the general public (2000 AQCD, p. 7–4). Further, some assessments performed for previous reviews have included modeling simulations both without and with indoor sources (gas stoves and tobacco smoke) to provide context for the assessment of ambient CO exposure and dose (*e.g.,* U.S. EPA, 1992; Johnson *et al.,* 2000), and these assessments have found that nonambient sources have a substantially greater impact on the highest total exposures experienced by the simulated population than do ambient sources (Johnson *et al.,* 2000; REA, sections 1.2 and 6.3).[11]. However, the focus of this REA, conducted to inform the current review of the CO NAAQS, is on sources of ambient CO. While recognizing this information regarding the potential for indoor sources, where present, to play a role in CO exposures and COHb levels, the exposure modeling in the current review (described in section II.C below) did not include indoor CO sources in order to focus on the impact of ambient CO sources on population COHb levels.

Apart from the impaired oxygen delivery to tissues related to COHb formation, the evidence also indicates alternative mechanisms of CO-induced effects independent of limited oxygen availability (2000 AQCD, section 5.9; ISA, section 5.1.3). These mechanisms are primarily associated with CO's ability to bind heme-containing proteins other than hemoglobin and myoglobin, and involve a wide range of molecular targets and CO concentrations, as described in the 2000 AQCD (USEPA, 2000, section 5.6) and in the ISA (ISA, section 5.1.3). Older toxicological studies demonstrated that exposure to high concentrations of CO resulted in altered functions of heme proteins other than myoglobin and hemoglobin, potentially interfering with basic cell and molecular processes and leading to dysfunction and/or disease. More recent toxicological *in vitro* and *in vivo* studies have provided evidence of alteration of nitric oxide signaling, inhibition of cytochrome C oxidase, heme loss from protein, disruption of iron homeostasis and alteration of cellular reduction-oxidation status (ISA, section 5.1.3.2). The ISA notes that these mechanisms may be interrelated. The evidence for these alternative mechanisms and the role they may play in CO-induced health effects at concentrations relevant to the current NAAQS is not clear.

As noted in the ISA, "CO may be responsible for a continuum of effects from cell signaling to adaptive responses to cellular injury, depending on intracellular concentrations of CO, heme proteins and molecules which modulate CO binding to heme proteins" (ISA, section 5.1.3.3). However, as noted in the Policy Assessment, new research based on this evidence for pathways other than those related to impaired oxygen delivery to tissues is needed to further understand these pathways and their linkage to CO-induced effects in susceptible populations. Thus, the evidence indicates that COHb continues to be the most useful and well-supported indicator of CO exposures and the best biomarker to characterize the potential for health effects associated with exposures to ambient CO at this time (PA, section 2.2.1).

2. Nature of Effects

As observed in the Policy Assessment, the long-standing body of evidence that has established many aspects of the biological effects of CO continues to contribute to our understanding of the health effects of ambient CO (PA, section 2.2.1). Binding to heme proteins and the alteration of their function is the common mechanism underlying biological responses to CO. Upon inhalation, CO diffuses through the respiratory zone (alveoli) to the blood where it binds to hemoglobin, forming COHb. Accordingly, inhaled CO elicits various health effects through binding to, and associated alteration of the function of, a number of heme-containing molecules, mainly hemoglobin (*see e.g.,* ISA, section 4.1). The best characterized health effect associated with CO levels of concern is hypoxia (reduced oxygen availability) induced by increased COHb levels in blood and decreased oxygen availability to critical tissues and organs, specifically the heart (ISA, section 5.1.2). Consistent with this, medical conditions that affect the biological mechanisms to compensate for this effect (*e.g.,* vasodilation and increased coronary blood flow with increased oxygen delivery to the myocardium) can contribute to a reduced amount of oxygen available to key body tissues, potentially affecting organ system

[10] A significant source of nonambient CO long recognized as contributing to elevated COHb levels is tobacco smoking (*e.g.,* ISA, Figure 4–12). Further, baseline COHb levels in active smokers have been estimated to range from 3 to 8% for one- to two-pack-per-day smokers. As a result of their higher baseline COHb levels, smokers may exhale more CO into the air than they inhale from the ambient environment when not smoking. Tobacco smoking can also contribute to increased CO exposures and associated COHb levels in nonsmokers (2000 AQCD, p. 7–4).

[11] As has been recognized in previous CO NAAQS reviews, such sources cannot be effectively mitigated by setting more stringent ambient air quality standards (59 FR 38914).

function and limiting exercise capacity (2000 AQCD, section 7.1).[12]

The body of health effects evidence for CO has grown considerably since the review completed in 1994 with the addition of numerous epidemiological and toxicological studies (ISA; 2000 AQCD). This evidence provides additional detail and support to our prior understanding of CO effects and population susceptibility. Most notably, the current evidence includes much expanded epidemiological evidence that is consistent with previous conclusions regarding cardiovascular disease-related susceptibility (ISA, section 5.7; 2000 AQCD, section 7.7). In this review, the clearest evidence for ambient CO-related effects is available for cardiovascular effects. Using an established framework to characterize the evidence as to likelihood of causal relationships between exposure to ambient CO and specific health effects (ISA, chapter 1) the ISA states that "Given the consistent and coherent evidence from epidemiologic and human clinical studies, along with biological plausibility provided by CO's role in limiting oxygen availability, it is concluded that a causal relationship is likely to exist between relevant[13] short-term CO exposures and cardiovascular morbidity" (ISA, p. 2–6, section 2.5.1). Additionally, as mentioned above, the ISA judges the evidence to be suggestive of causal relationships between relevant short- and long-term CO exposures and CNS effects, birth outcomes and developmental effects following long-term exposure, respiratory morbidity following short-term exposure, and mortality following short-term exposure (ISA, section 2.5, Table 2–1).

Similar to the previous review, results from controlled human exposure studies of individuals with coronary artery disease (CAD)[14] (Adams *et al.,* 1988; Allred *et al.,* 1989a, 1989b, 1991; Anderson *et al.,* 1973; Kleinman *et al.,* 1989, 1998; Sheps *et al.,* 1987[15]) are the "most compelling evidence of CO-induced effects on the cardiovascular system" (ISA, section 5.2). Additionally, the use of an internal dose metric, COHb, adds to the strength of the findings in these controlled exposure studies. As a group, these studies demonstrate the role of short-term CO exposures in increasing the susceptibility of people with CAD to incidents of exercise-associated myocardial ischemia. Toxicological studies described in the current review provide evidence of CO effects on the cardiovascular system, including electrocardiographic effects of 1-hour exposures to 35 ppm CO in a rat strain developed as an animal model of cardiac susceptibility (ISA, section 5.2.5.3).

Among the controlled human exposure studies, the ISA places principal emphasis on the study of CAD patients by Allred *et al.* (1989a, 1989b, 1991)[16] (which was also considered in the previous review) for the following reasons: (1) Dose-response relationships were observed; (2) effects were observed at the lowest COHb levels tested (mean of 2–2.4% COHb[17] following experimental CO exposure), with no evidence of a threshold; (3) objective measures of myocardial ischemia (ST-segment depression)[18] were assessed, as well as the subjective measure of decreased time to induction of angina; (4) measurements were taken both by CO-oximetry (CO–Ox) and by gas chromatography (GC), which provides a more accurate measurement of COHb blood levels[19]; (5) a large number of study subjects were used; (6) a strict protocol for selection of study subjects was employed to include only CAD patients with reproducible exercise-induced angina; and (7) the study was conducted at multiple laboratories around the U.S. This study evaluated changes in time to exercise-induced onset of markers of myocardial ischemia resulting from two short (approximately 1-hour) CO exposures targeted to result in mean study subject COHb levels of 2% and 4%, respectively (ISA, section 5.2.4). In this study, subjects (n=63) on three separate occasions underwent an initial graded exercise treadmill test, followed by 50 to 70-minute exposures under resting conditions to room air CO concentrations or CO concentrations targeted for each subject to achieve blood COHb levels of 2% and 4%. The exposures were to average CO concentrations of 0.7 ppm (room air concentration range 0–2 ppm), 117 ppm (range 42–202 ppm) and 253 ppm (range 143–357 ppm). After the 50- to 70-minute exposures, subjects underwent a second graded exercise treadmill test, and the percent change in time to onset of angina and time to ST endpoint between the first and second exercise tests was determined. For the two CO exposures, the average post-exposure COHb concentrations were reported as 2.4% and 4.7%, and the subsequent post-exercise average COHb concentrations were reported as 2.0% and 3.9%.[20]

[12] For example, people with peripheral vascular diseases and heart disease patients often have markedly reduced circulatory capacity and reduced ability to compensate for increased circulatory demands during exercise and other stress (2000 AQCD, p. 7–7).

[13] Relevant CO exposures are defined in the ISA as "generally within one or two orders of magnitude of ambient CO concentrations" (ISA, section 2.5).

[14] Coronary artery disease (CAD), often also called coronary heart disease or ischemic heart disease is a category of cardiovascular disease associated with narrowed heart arteries. Individuals with this disease may have myocardial ischemia, which occurs when the heart muscle receives insufficient oxygen delivered by the blood. Exercise-induced angina pectoris (chest pain) occurs in many of them. Among all patients with diagnosed CAD, the predominant type of ischemia, as identified by ST segment depression, is asymptomatic (*i.e.,* silent). Patients who experience angina typically have additional ischemic episodes that are asymptomatic (2000 AQCD, section 7.7.2.1). In addition to such chronic conditions, CAD can lead to sudden episodes, such as myocardial infarction (ISA, p. 5–24).

[15] Statistical analyses of the data from Sheps *et al.,* (1987) by Bissette *et al* (1986) indicate a significant decrease in time to onset of angina at 4.1% COHb if subjects that did not experience exercise-induced angina during air exposure are also included in the analyses.

[16] Other controlled human exposure studies of CAD patients (listed in Table 2–2 of the PA, and discussed in more detail in the 1991 and 2000 AQCDs) similarly provide evidence of reduced time to exercise-induced angina associated with elevated COHb resulting from controlled short-duration exposure to increased concentrations of CO.

[17] These levels and other COHb levels described for this study below are based on GC analysis unless otherwise specified. Matched measurements available for CO-oximetry (CO–Ox) and gas chromatography (GC) in this study indicate CO–Ox measurements of 2.65% (post-exercise mean) and 3.21% (post-exposure mean) corresponding to the GC measurement levels of 2.00% (post-exercise mean) to 2.38% (post-exposure mean) for the lower exposure level assessed in this study (Allred *et al.,* 1991).

[18] The ST-segment is a portion of the electrocardiogram, depression of which is an indication of insufficient oxygen supply to the heart muscle tissue (myocardial ischemia). Myocardial ischemia can result in chest pain (angina pectoris) or such characteristic changes in ECGs or both. In individuals with coronary artery disease, it tends to occur at specific levels of exercise. The duration of exercise required to demonstrate chest pain and/or a 1-mm change in the ST segment of the ECG were key measurements in the multicenter study by Allred *et al* (1989a, 1989b, 1991).

[19] As stated in the ISA, the gas chromatographic technique for measuring COHb levels "is known to be more accurate than spectrophotometric measurements, particularly for samples containing COHb concentrations < 5%" (ISA, p. 5–41). CO-oximetry is a spectrophotometric method commonly used to rapidly provide approximate concentrations of COHb during controlled exposures (ISA, p. 5–41). At the low concentrations of COHb (<5%) more relevant to ambient CO exposures, co-oximeters are reported to overestimate COHb levels compared to GC measurements, while at higher concentrations, this method is reported to produce underestimates (ISA, p.4–18).

[20] While the COHb blood level for each subject during the exercise tests was intermediate between the post-exposure and subsequent post-exercise measurements (*e.g.,* mean 2.4–2.0% and 4.7–3.9%), the study authors noted that the measurements at the end of the exercise test represented the COHb concentrations at the approximate time of onset of myocardial ischemia as indicated by angina and ST segment changes. The corresponding ranges of CO–Ox measurements for the two exposures were 2.7–3.2% and 4.7–5.6%. In this document, we refer to the GC-measured mean of 2.0% or 2.0–2.4% for the

Across all subjects, the mean time to angina onset for control ("room" air) exposures was approximately 8.5 minutes, and the mean time to ST endpoint was approximately 9.5 minutes (Allred *et al.,* 1989b). Relative to room-air exposure that resulted in a mean COHb level of 0.6% (post-exercise), exposure to CO resulting in post-exercise mean COHb concentrations of 2.0% and 3.9% were observed to decrease the exercise time required to induce ST-segment depression by 5.1% (p=0.01) and 12.1% (p<0.001), respectively. These changes were well correlated with the onset of exercise-induced angina, the time to which was shortened by 4.2% (p=0.027) and 7.1% (p=0.002), respectively, for the two experimental CO exposures (Allred *et al.,* 1989a, 1989b, 1991).[21] As at the time of the last review, while ST-segment depression is recognized as an indicator of myocardial ischemia, the exact physiological significance of the observed changes among those with CAD is unclear (ISA, p. 5–48).

No controlled human exposure studies have been specifically designed to evaluate the effect of controlled short-term exposures to CO resulting in COHb levels lower than a study mean of 2% (ISA, section 5.2.6). However, an important finding of the multi-laboratory study was the dose-response relationship observed between COHb and the markers of myocardial ischemia, with effects observed at the lowest increases in COHb tested, without evidence of a measurable threshold effect. As reported by the authors, the results comparing "the effects of increasing COHb from baseline levels (0.6%) to 2 and 3.9% COHb showed that each produced further changes in objective ECG measures of ischemia" implying that "small increments in COHb could adversely affect myocardial function and produce ischemia" (Allred *et al.,* 1989b, 1991).

The epidemiological evidence has expanded considerably since the last review including numerous additional studies that are coherent with the evidence on markers of myocardial ischemia from controlled human exposure studies of CAD patients (ISA, section 2.7). The most recent set of epidemiological studies in the U.S. have evaluated the associations between ambient concentrations of multiple pollutants (*i.e.* fine particles or $PM_{2.5}$, nitrogen dioxide, sulfur dioxide, ozone, and CO) at fixed-site ambient monitors and increases in emergency department visits and hospital admissions for specific cardiovascular health outcomes including ischemic heart disease (IHD), myocardial infarction (MI), congestive heart failure (CHF), and cardiovascular diseases (CVD) as a whole (Bell *et al.,* 2009; Koken *et al.,* 2003; Linn *et al.,* 2000; Mann *et al.,* 2002; Metzger *et al.,* 2004; Symons *et al.,* 2006; Tolbert *et al.,* 2007; Wellenius *et al.,* 2005). Findings of positive associations for these outcomes with metrics of ambient CO concentrations are coherent with the evidence from controlled human exposure studies of myocardial ischemia-related effects resulting from elevated CO exposures (ISA, section 2.5.1; ISA, Figure 2–1). In these studies, the ambient CO concentration averaging time for which health outcomes were analyzed varied from 1 hour to 24 hours, with the air quality metrics based on either a selected central-site monitor for the area or an average for multiple monitors in the area of interest. The study areas for which positive associations of these metrics were reported with IHD, MI and CVD outcomes include: the Atlanta, Georgia metropolitan statistical area; the greater Los Angeles, California area; and a group of 126 urban counties. Together the individual study periods spanned the years from 1988 through 2005. The risk estimates from these studies indicate statistically significant positive associations were observed with ambient CO concentrations based on air quality for the day of hospital admission or based on the average of the selected ambient CO concentration metric across that day and 2 or 3 days previous (ISA, Figures 5–2 and 5–5). Many of the studies for these outcomes include same day or next day lag periods, which, as noted in the ISA "are consistent with the proposed mechanism and biological plausibility of these CVD outcomes" (ISA, p. 5–40).[22]

Additionally, there are U.S. studies reporting associations with hospital admissions for CHF, a condition that affects an individual's ability to compensate for reduced oxygen availability. These include one in southern California which reported a significant association for ambient CO with hospital admissions for CHF (Linn *et al.,* 2000), as well as studies in Allegheny County (Pittsburgh) for 1987–1999 study period (Wellenius *et al.,* 2005), and Denver for the months of July-August during 1993–1997 (Koken *et al.,* 2003; ISA, pp. 5–31 to 5–33). Risk estimates for all three of these studies are based on the 24-hour CO concentration, with the California and Allegheny County studies' association with same-day air quality, while the association shown for the Denver study was with ambient CO concentration three days prior to health outcome (PA, Table 2–1).

As noted by the ISA, "[s]tudies of hospital admissions and ED visits for IHD provide the strongest [epidemiological] evidence of ambient CO being associated with adverse CVD outcomes" (ISA, p. 5–40, section 5.2.3). With regard to studies for other measures of cardiovascular morbidity, the ISA notes that "[t]hough not as consistent as the IHD effects, the effects for all CVD hospital admissions (which include IHD admissions) and CHF hospital admissions also provide evidence for an association of cardiovascular outcomes and ambient CO concentrations" (ISA, section 5.2.3). While noting the difficulty in determining the extent to which CO is independently associated with CVD outcomes in this group of studies as compared to CO as a marker for the effects of another traffic-related pollutant or mix of pollutants, the ISA concludes that the epidemiological evidence, particularly when considering the copollutant analyses, provides support to the clinical evidence for a direct effect of short-term ambient CO exposure on CVD morbidity (ISA, pp. 5–40 to 5–41).

As discussed in detail in the ISA, additional epidemiological studies have evaluated associations of ambient CO with other cardiovascular effects since the last review. For example, preliminary evidence of a link between exposure to CO and alteration of blood markers of coagulation and inflammation in individuals with CAD or CVD has been provided by a few well conducted and informative studies (ISA, Table 5–6; Delfino *et al.,* 2008; Liao *et al.,* 2005). As noted by the ISA, however, further studies are warranted to investigate the role of these markers in prothrombotic events and their possible contribution to the pathophysiology of CO-induced aggravation of ischemic heart disease

COHb levels resulting from the lower experimental CO exposure.

[21] Another indicator measured in the study was the combination of heart rate and systolic blood pressure which provides a clinical index of the work of the heart and myocardial oxygen consumption, since heart rate and blood pressure are major determinants of myocardial oxygen consumption (Allred *et al.,* 1991). A decrease in oxygen to the myocardium would be expected to be paralleled by ischemia at lower heart rate and systolic blood pressure. This heart rate-systolic blood pressure indicator at the time to ST-endpoint was decreased by 4.4% at the 3.9% COHb dose level and by a nonstatistically-significant, smaller amount at the 2.0% COHb dose level.

[22] Of the studies for which risk estimates are based on multi-day averages (the Atlanta studies and the California study by Mann *et al.,* 2002), the California study by Mann *et al.,* (2002) also observed a significant positive association with same day CO concentration.

(ISA, section 5.2.1.8). Other epidemiological studies (including field and panel studies) also provide some evidence of a link between CO exposure and heart rate and heart rate variability (ISA, section 5.2.1.1). With regard to the two of three studies reporting a positive association with heart rate, the ISA concluded that "further research is warranted" to corroborate the results, while the larger number of studies for heart rate variability parameters is characterized as having mixed associations (ISA, p. 5–15). Additionally, of the two studies of electrocardiogram changes indicative of ischemic events (ISA, section 5.2.1.2), one found no association and, in the other study, the association with CO did not remain statistically significant in multipollutant models, unlike the association with black carbon in that study (ISA, p. 5–16). A limited number of epidemiological studies (Bell *et al.,* 2009; Linn *et al.,* 2000) have investigated hospital admissions for stroke (including both hemorrhagic and ischemic forms) and generally report small or no associations with ambient CO concentrations (ISA, section 5.2.1.9, Table 5–8 and Figure 5–3).

At the time of the last review, there was evidence for effects other than cardiovascular morbidity, including neurological, respiratory and developmental effects. Evidence for these effects includes the following.

- With regard to neurological effects, acute exposures to CO have long been known to induce CNS effects such as those observed with CO poisoning, although limited and equivocal evidence available at the time of the last review included indications of some neurobehavioral effects to result from CO exposures resulting in a range of 5–20% COHb (2000 AQCD, section 6.3.2). No additional clinical or epidemiological studies are now available that investigated such effects of CO at ambient levels (ISA, section 5.3).
- With regard to potential effects of CO on birth outcomes and developmental effects, the potential vulnerability of the fetus and very young infant to CO was recognized during the 1994 review and in the 2000 AQCD. The CO-specific evidence available, however, included limited epidemiological analyses focused primarily on very high CO exposures associated with maternal smoking, and animal studies involving very high CO exposures (USEPA, 1992; 2000 AQCD). The 2000 AQCD concluded that typical ambient CO levels were unlikely to cause increased fetal risk (2000 AQCD, p. 6–44). The current review includes additional epidemiological and animal toxicological studies. The currently available evidence includes limited but suggestive epidemiologic evidence for a CO-induced effect on preterm-birth, birth defects, decrease in birth weight, other measures of fetal growth, and infant mortality (ISA, section 5.4.3). The available animal toxicological studies provide some support and coherence for these birth and developmental outcomes at higher than ambient exposures,[23] although a clear understanding of the mechanisms underlying potential reproductive and developmental effects is still lacking (ISA, section 2.5.3).
- With regard to respiratory effects, the 2000 AQCD concluded it unlikely that CO has direct effects on lung tissue, except at extremely high concentrations (2000 AQCD, p. 6–45). There is currently limited, suggestive evidence of an association between short-term exposure to CO and respiratory-related outcomes. Only preliminary evidence is available, however, regarding a mechanism that could provide plausibility for CO-induced effects (ISA, section 5.5.5.1).

Thus, while there is some additional evidence on neurological, respiratory and developmental effects, it remains limited.

In summary, rather than altering conclusions from the previous review, the current evidence provides continued support and some additional strength to the previous conclusions regarding the health effects associated with exposure to CO and continues to indicate cardiovascular effects, particularly effects related to the role of CO in limiting oxygen availability, as those of greatest concern at low exposures.

3. At-Risk Populations

In identifying population groups or life stages at greatest risk for health risk from a specific pollutant, the terms susceptibility, vulnerability, sensitivity, and at-risk are commonly employed. The definition for these terms sometimes varies, but in most instances "susceptibility" refers to biological or intrinsic factors (*e.g.,* lifestage, gender) while "vulnerability" refers to nonbiological or extrinsic factors (*e.g.,* visiting a high-altitude location, medication use). Additionally, in some cases, the terms "at-risk" and sensitive have been used to encompass both of these concepts. At times, however, factors of "susceptibility" and "vulnerability" are intertwined and are difficult to distinguish. In the ISA for this review, the term susceptibility has been used broadly to recognize populations that have a greater likelihood of experiencing effects related to ambient CO exposure, such that use of the term susceptible populations in the ISA is defined as follows (ISA, section 5.7, p. 5–115):

> Populations that have a greater likelihood of experiencing health effects related to exposure to an air pollutant (*e.g.,* CO) due to a variety of factors including, but not limited to: genetic or developmental factors, race, gender, lifestage, lifestyle (*e.g.,* smoking status and nutrition) or preexisting disease, as well as population-level factors that can increase an individual's exposure to an air pollutant (*e.g.,* CO) such as socioeconomic status [SES], which encompasses reduced access to health care, low educational attainment, residential location, and other factors

Thus, susceptible populations are at greater risk of CO effects and are also referred to as *at-risk* in the corresponding discussion in the REA and Policy Assessment and the summary below.

The current evidence, while much expanded in a number of ways, continues to support the conclusions from the previous review regarding susceptible populations for exposure to ambient CO. In the AQCD for the review completed in 1994 and in the 2000 AQCD, the evidence best supported the identification of patients with CAD as a population at increased risk from low levels of CO (USEPA, 1992; 2000 AQCD). Other groups were also recognized as potentially susceptible in the 2000 AQCD based on consideration of the clinical evidence and theoretical work, as well as laboratory animal research (2000 AQCD, p. 7–6). These include fetuses and young infants; pregnant women; the elderly, especially those with compromised cardiovascular function; people with conditions affecting oxygen absorption, blood flow, oxygen carrying capacity or transport; people using drugs with central nervous system depressant properties or exposed to chemical substances that increase endogenous formation of CO; and people who have not adapted to high altitude and are exposed to a combination of high altitude and CO. For these potentially susceptible groups, little empirical evidence was available by which to specify health effects associated with ambient or near-ambient CO exposures (2000 AQCD, p. 7–6).

As summarized in the Policy Assessment, based on the evidence from controlled human exposure studies also considered in the last review, and the

[23] The lowest exposures eliciting an effect in the animal studies were exposures of 22 hours per day over about 14 prenatal days at a concentration of 12 ppm (ISA, Table 5–17).

now much-expanded epidemiological evidence base which is coherent with the evidence from these studies, the population with pre-existing cardiovascular disease associated with limitation in oxygen availability continues to be the best characterized population at risk of adverse CO-induced effects, with CAD recognized as "the most important susceptibility characteristic for increased risk due to CO exposure" (ISA, section 2.6.1). An important factor determining the increased susceptibility of this population is their inability to compensate for the reduction in oxygen levels due to an already compromised cardiovascular system. Individuals with a healthy cardiovascular system (*i.e.,* with healthy coronary arteries) have operative physiologic compensatory mechanisms (*e.g.,* increased blood flow and oxygen extraction) for CO-induced hypoxia and are unlikely to be at increased risk of CO-induced effects (ISA, p. 2–10).[24] In addition, the high oxygen consumption of the heart, together with the inability to compensate for the hypoxic effects of CO, make the cardiac muscle of a person suffering with CAD a critical target for the hypoxic effects of CO.

In the Integrated Science Assessment for the current review, recognition of susceptibility of the population with pre-existing cardiovascular disease, such as CAD, is supported by the expanded epidemiological database, which includes a number of studies reporting significant increases in hospital admissions for IHD, angina and MI in relation to CO exposures (ISA, section 2.7). Further support is provided by epidemiologic studies (Mann *et al.,* 2002; and Peel *et al.,* 2007) of increased hospital admissions and emergency department visits for IHD among individuals with secondary diagnoses for other cardiovascular outcomes including arrhythmia and congestive heart failure (ISA, section 5.7), and toxicological studies reporting altered cardiac outcomes in animal models of cardiovascular disease (ISA, section 5.2.1.9).

Cardiovascular disease comprises many types of medical disorders, including heart disease, cerebrovascular disease (*e.g.,* stroke), hypertension (high blood pressure), and peripheral vascular diseases. Heart disease, in turn, comprises several types of disorders, including ischemic heart disease (CHD or CAD, myocardial infarction, angina), congestive heart failure, and disturbances in cardiac rhythm (2000 AQCD, section 7.7.2.1). Types of cardiovascular disease other than those discussed above may also contribute to increased susceptibility to the adverse effects of low levels of CO (ISA, section 5.7.1.1). For example, some evidence with regard to other types of cardiovascular disease such as congestive heart failure, arrhythmia, and non-specific cardiovascular disease, although more limited for peripheral vascular and cerebrovascular disease, indicates that "the continuous nature of the progression of CAD and its close relationship with other forms of cardiovascular disease suggest that a larger population than just those individuals with a prior diagnosis of CAD may be susceptible to health effects from CO exposure" (ISA, p. 5–117).

Although there were little experimental data available at the time of the last review to adequately characterize specific health effects of CO at ambient levels for other potentially at-risk populations, several other populations were identified as being potentially more at risk of CO-induced effects due to a number of factors. These factors include pre-existing diseases that could inherently decrease oxygen availability to tissues, lifestage vulnerabilities (*e.g.,* fetuses, young infants or newborns, the elderly), gender, lifestyle, medications or alterations in the physical environment (*e.g.,* increased altitude). This is consistent with the ISA conclusions in the current review which recognize other populations that may be potentially susceptible to the effects of CO as including: Those with other pre-existing diseases that may have already limited oxygen availability or increased COHb production or levels, such as people with obstructive lung diseases, diabetes and anemia; older adults; fetuses during critical phases of development and young infants or newborns; those who spend a substantial time on or near heavily traveled roadways; visitors to high-altitude locations; and people ingesting medications and other substances that enhance endogenous or metabolic CO formation (ISA, section 2.6.1). In recognizing the potential susceptibility of these populations, the Policy Assessment also noted the lack of information on specific COHb levels that may be associated with health effects in these other groups and the nature of those effects, as well as a way to relate the specific evidence available for the CAD population to these other populations (PA, section 2.2.1).

The current evidence continues to support the identification of people with cardiovascular disease as having susceptibility to CO-induced health effects (ISA, 2–12), with those having CAD as the population with the best characterized susceptibility to CO-induced health effects (ISA, sections 5.7.1.1 and 5.7.8).[25] An important susceptibility consideration for this population is the inability to compensate for CO-induced hypoxia since individuals with CAD have an already compromised cardiovascular system. Included in this susceptible population are those with angina pectoris (cardiac chest pain), those who have experienced a heart attack, and those with silent ischemia or undiagnosed IHD (AHA, 2003). People with other cardiovascular diseases, particularly heart diseases, are also at risk of CO-induced health effects. We also recognize other populations potentially susceptible to CO-induced effects, most particularly those with other pre-existing diseases that cause limited oxygen availability, increased COHb levels, or increased endogenous CO production, such as people with obstructive lung diseases, diabetes and anemia; however, information characterizing susceptibility for this population is limited.

4. Potential Impacts on Public Health

In light of the evidence described above with regard to factors contributing to greater susceptibility to health effects of ambient CO, this section, drawing from the Integrated Science Assessment and discussion in the Policy Assessment, discusses the health significance of the effects occurring with the lowest relevant (short-term) exposures to ambient CO and the size of the at-risk populations in the U.S. These considerations are important elements in the characterization of potential public health impacts associated with exposure to ambient CO.

We first consider the effects identified by the evidence at the lowest studied short-term exposures. As discussed in section II.B.2 above, the study by Allred *et al.,* (1989a, 1989b, 1991) indicates that increases in blood COHb in response to 1-hour CO exposures

[24] The other well-studied individuals at the time of the last review were healthy male adults that experienced decreased exercise duration at similar COHb levels during short term maximal exercise. This population was of lesser concern since it represented a smaller sensitive group, and potentially limited to individuals that would engage in vigorous exercise such as competing athletes (1991 AQCD, section 10.3.2).

[25] As recognized in the ISA, "Although the weight of evidence varies depending on the factor being evaluated, the clearest evidence indicates that individuals with CAD are most susceptible to an increase in CO-induced health effects" (ISA, p. 2–12).

produce evidence of myocardial ischemia in CAD patients with reproducible exercise-induced angina. At a study group average COHb level of 2–2.4%, the statistically significant reduction in the time to exercise-induced markers of myocardial ischemia in CAD patients was 4–5% on average (approximately 30 seconds), with larger reductions observed at the higher studied COHb level. In discussing public health implications of the observed responses, the study authors noted that the responses observed at the studied COHb levels were similar to those considered clinically significant when evaluating medications to treat angina from coronary artery disease (Allred *et al.,* 1989a, 1991). The independent review panel for the study further noted that frequent encounters in "everyday life" with increased COHb levels on the order of those tested in the study might be expected to limit activity and affect quality of life (Allred *et al.,* 1989b, pp. 38, 92–94; 1991 AQCD, p. 10–35).

In the review completed in 1994, the body of evidence that demonstrated cardiovascular effects in CAD patients exposed to CO was given primary consideration, with the Administrator judging that "cardiovascular effects, as measured by decreased time to onset of angina pain and by decreased time to onset of significant ST-segment depression, are the health effects of greatest concern, which clearly have been associated with CO exposures at levels observed in the ambient air" (59 FR 38913). Additionally, as discussed in section II.B.2 above, a dose-response relationship has been documented for COHb resulting from brief, elevated CO exposures in persons with pre-existing CAD, with no evidence of threshold (59 FR 38910; ISA, section 5.2.4; Allred *et al.,* 1989a, 1989b, 1991).

In the 1994 review decision (as discussed in section II.D.1.a below), less significance was ascribed to the effects at the lower COHb level assessed in the Allred *et al.,* study (1989a, 1989b, 1991), which were described to be of less certain clinical importance, than effects reported from short-term CO exposure studies that assessed higher COHb levels (59 FR 38913–38914). In the current review of the evidence, the ISA describes the physiological significance of the changes at the lowest tested dose level (*e.g.,* 2% COHb from Allred *et al.,* 1989b) as unclear, additionally noting that variability in severity of disease among individuals with CAD is likely to influence the critical level of COHb which leads to adverse cardiovascular effects (ISA, p. 2–6).

In considering potential public health impacts of CO in ambient air, we also consider the size of the at-risk populations. The population with CAD is well recognized as susceptible to increased risk of CO-induced health effects (ISA, sections 5.7.1.1 and 5.7.8). The 2007 estimate from the National Health Interview Survey (NHIS) performed by the U.S. Centers for Disease Control of the size of the U.S. population with coronary heart disease, angina pectoris (cardiac chest pain) or who have experienced a heart attack (ISA, Table 5–26) is 13.7 million people (ISA, pp. 5–117). Further, there are estimated to be three to four million additional people with silent ischemia or undiagnosed IHD (AHA, 2003). In combination, this represents a large population that is more susceptible to ambient CO exposure when compared to the general population (ISA, section 5.7).

In addition to the population with diagnosed and undiagnosed CAD, the ISA notes the size of the larger population of people with all types of heart disease (HD), which may also be at increased risk of CO-induced health effects (ISA, section 2.6.1). Within this broader group, implications of CO exposures are more significant for those persons for whom their disease state affects their ability to compensate for the hypoxia-related effects of CO (ISA, section 4.4.4). The NHIS estimates for 2007 indicate there is a total of approximately 25 million people with heart disease of any type (ISA, Table 5–26).

Other populations potentially susceptible to the effects of CO include people with chronic obstructive pulmonary disease, diabetes and anemia, as well as older adults and fetuses during critical phases of development (as discussed in section II.B.3 above). In considering potential impacts on such populations, we recognize that the evidence is limited or lacking with regard to effects of CO at ambient levels, and associated exposures and COHb levels, while providing no indication of susceptibility to ambient CO greater than that of CHD and HD populations.

### *C. Human Exposure and Dose Assessment*

Our consideration of the scientific evidence in the current review, as at the time of the last review (summarized in section II.D.1 below), is informed by results from a quantitative analysis of estimated population exposure and resultant COHb levels. This analysis provides estimates of the percentages of simulated at-risk populations expected to experience daily maximum COHb levels at or above a range of benchmark levels under varying air quality scenarios (*e.g.,* just meeting the current or alternative standards). The benchmark COHb levels were identified based on consideration of the evidence discussed in section II.B above. The following subsections summarize the design and methods of the quantitative assessment (section II.C.1) and the important uncertainties associated with these analyses (section II.C.2). The results of the analyses, as they relate to considerations of the adequacy of the current standards, are discussed in section II.D.2 below.

#### 1. Summary of Design Aspects

In this section, we provide a summary of key aspects of the assessment conducted for this review, including the study areas and air quality scenarios investigated, modeling tools used, at-risk populations simulated, and COHb benchmark levels of interest. The assessment is described in detail in the REA and summarized in the PA (section 2.2.2).

The assessment estimated CO exposure and associated COHb levels in simulated at-risk populations in two urban study areas in Denver and Los Angeles, in which current ambient CO concentrations are below the current standards. We selected these areas because: (1) Areas of both cities have been included in prior CO NAAQS exposure assessments and thus serve as an important connection with past assessments; (2) historically, they have generally had the highest ambient CO concentrations among urban areas in the U.S.; and (3) Denver is at high altitude and represents an important risk scenario due to the potential increased susceptibility to CO exposure associated with high altitudes. In addition, of 10 urban areas across the continental U.S. selected for detailed air quality analysis in the ISA and having ambient monitors meeting a 75% completeness criterion, the two study area locations were ranked first (Los Angeles) and second (Denver) regarding the percentage of elderly population within 5, 10, and 15 km of monitor locations, and ranked first (Los Angeles) and fifth (Denver) regarding number of 1- and 8-hour daily maximum CO concentration measurements (ISA, section 3.5.1.1).

Estimates were developed for exposures to ambient CO associated with current "as is" conditions (2006 air quality) and also for higher ambient CO concentrations associated with air quality conditions simulated to just

meet the current 8-hour standard,[26] as well as for air quality conditions simulated to just meet several alternative standards. Although we consider it unlikely that air concentrations in many urban areas across the U.S. that are currently well below the current standards would increase to just meet the 8-hour standard, we recognize the potential for CO concentrations in some areas currently below the standard to increase to just meet the standard. We additionally recognize that this simulation can provide useful information in evaluating the current standard. Accordingly, we simulated conditions of increased CO concentrations that just meet the current 8-hour standard in the two study areas. In so doing, we recognize the uncertainty associated with simulating this hypothetical profile of higher CO concentrations that just meet the current 8-hour standard. We note, however, that an analysis of the ratios of 1-hour to 8-hour design value metrics based on 2009 ambient CO concentrations in U.S. locations indicates that the relationships between design values for the two study areas under the air quality conditions simulated to just meet the current 8-hour standard fall well within the 2009 national distribution of such ratios (Policy Assessment, section 2.2.2).[27]

The exposure and dose modeling for the assessment, presented in detail in the REA, relied on version 4.3 of EPA's Air Pollutant Exposure model (APEX4.3), which estimates human exposure using a stochastic, event-based microenvironmental approach (REA, chapter 4). This model has a history of application, evaluation, and progressive model development in estimating human exposure and dose for several NAAQS reviews, including CO, ozone ($O_3$), nitrogen dioxide ($NO_2$), and sulfur dioxide ($SO_2$). As described in section II.D.1 below, the review of the CO standards completed in 1994 relied on population exposure and dose estimates generated from the probabilistic NAAQS exposure model (pNEM), a model that, among other differences from the current modeling approach with APEX4.3, employed a cohort-based approach (Johnson *et al.,* 1992; U.S. EPA, 1992).[28] [29] Each of the model developments since the use of pNEM in that review have been designed to allow APEX to better represent human behavior, human physiology, and microenvironmental concentrations and to more accurately estimate variability in CO exposures and COHb levels (REA, chapter 4).[30]

As used in the current assessment, APEX probabilistically generates a sample of hypothetical individuals from an actual population database and simulates each individual's movements through time and space (*e.g.,* indoors at home, inside vehicles) to estimate his or her exposure to ambient CO (REA, chapter 4). The individual's movements are simulated based on data available from recent activity pattern surveys (CHAD[31] now has about 34,000 person-days of data) and the most recent U.S. census data on population demographics and home-to-workplace commutes. Based on exposure concentrations, minute-by-minute activity levels, and physiological characteristics of the simulated individuals (*see* REA, chapters 4 and 5), APEX estimates the level of COHb in the blood for each individual at the end of each hour based on a nonlinear solution to the Coburn-Forster-Kane equation (REA, section 4.4.7). These results across each simulated individual were then summarized in the REA and discussed in the Policy Assessment in terms of the percent of the simulated at-risk populations expected to experience one or more occurrences of daily maximum end-of-hour COHb levels of interest.

As discussed in section II.B above, people with cardiovascular disease are the population of primary focus in this review, and more specifically, as described in the ISA, coronary artery disease, also known as coronary heart disease, is the "most important susceptibility characteristic for increased risk due to CO exposure" (ISA, p. 2–11). Controlled human exposure studies have provided quantitative COHb dose-response information for this specific population with regard to effects on markers of myocardial ischemia. Accordingly, based on the current evidence with regard to quantitative information of COHb levels and association with specific health effects, the at-risk populations simulated in the quantitative assessment were (1) adults with CHD (also known as ischemic heart disease [IHD] or CAD), both diagnosed and undiagnosed, and (2) adults with any heart diseases, including undiagnosed ischemia.[32] Evidence characterizing the nature of specific health effects of CO in other populations is limited and does not include specific COHb levels related to health effects in those groups. As a result, the quantitative assessment does not develop separate quantitative dose estimates for populations other than those with CHD or HD.

In representing the two at-risk populations and their activity patterns, individuals were simulated based on age and gender distributions for CHD and HD populations. These distributions were developed by augmenting the prevalence estimates provided by the National Health Interview Survey for adults with CAD and adults with heart diseases of any type (HD) with estimates of undiagnosed ischemia (as described in section 5.5.1 of the REA). The undiagnosed ischemia estimates were developed based on two assumptions: (1) There are 3.5 million persons in U.S. with undiagnosed IHD (AHA, 2003) and (2) persons with undiagnosed IHD are distributed within the population in the same manner as persons with diagnosed IHD (REA, section 5.5.1).

APEX simulations performed for this review focused on exposures to ambient

[26] As noted elsewhere, the 8-hour standard is the controlling standard for ambient CO concentrations.

[27] More specifically, the ratio of the 1-hour design value to the 8-hour design value for the Los Angeles study area corresponds to approximately the 25th percentile of U.S. counties in 2009 and the ratio for the Denver study area corresponds to approximately the 75th percentile of U.S. counties in 2009. Under "as is" conditions the ratios for these two study areas correspond to approximately the 40th percentile of the 2009 national distribution (Policy Assessment, section 2.2.2).

[28] When using the cohort approach, each cohort is assumed to contain persons with identical exposures during the specified exposure period. Thus, variability in exposure will be attributed to differences in how the cohorts are defined, not necessarily reflecting differences in how individuals might be exposed in a population. In the assessment for the review completed in 1994, a total of 420 cohorts were used to estimate population exposure based on selected demographic information (11 groups using age, gender, work status), residential location, work location, and presence of indoor gas stoves (Johnson, *et al.,* 1992; USEPA, 1992).

[29] The use of pNEM in the prior review also (1) relied on a limited set of activity pattern data (approximately 3,600 person-days), (2) used four broadly defined categories to estimate breathing rates, and (3) implemented a geodesic distance range methodology to approximate workplace commutes (Johnson *et al.,* 1992; U.S. EPA, 1992). Each of these approaches used by pNEM, while appropriate given the data available at that time, would tend to limit the ability to accurately model expected variability in the population exposure and dose distributions.

[30] APEX4.3 includes new algorithms to (1) simulate longitudinal activity sequences and exposure profiles for individuals, (2) estimate activity-specific minute-by-minute oxygen consumption and breathing rates, (3) address spatial variability in home and work-tract ambient concentrations for commuters, and (4) estimate event-based microenvironmental concentrations (PA, section 2.2.2).

[31] CHAD is EPA's Comprehensive Human Activity Database which provides input data for APEX model simulations (REA, sections 4.3 and 4.4).

[32] As described in section 1.2 above, this is the same population group that was the focus of the CO NAAQS exposure/dose assessments conducted previously (*e.g.,* USEPA, 1992; Johnson *et al.,* 2000).

CO occurring in eight microenvironments,[33] absent any contribution to microenvironment concentrations from indoor (nonambient) CO sources. As noted in section II.B.1 above, however, where present, indoor sources, including gas stoves, attached garages and tobacco smoke, can also be important contributors to total CO exposure (ISA, sections 3.6.1 and 3.6.5). Previous assessments, that have included modeling simulations both with and without certain indoor sources, indicated that the impact of such sources can be substantial with regard to the portion of the at-risk population experiencing higher exposures and COHb levels (Johnson *et al.,* 2000). While we are limited with regard to information regarding CO emissions from indoor sources today and how they may differ from the time of the 2000 assessment, we note that ambient contributions have notably declined, and indoor source contributions from some sources may also have declined. Thus, as indicated in the Policy Assessment, we have no firm basis to conclude a different role for indoor sources today with regard to contribution to population CO exposure and COHb levels.

The REA developed COHb estimates for the simulated at-risk populations with attention to both COHb in absolute terms and in terms of the contribution to absolute levels associated with ambient CO exposures. Absolute COHb refers to the REA estimates of COHb levels resulting from endogenously produced CO and exposure to ambient CO (in the absence of any nonambient sources). The additional REA estimates of ambient CO exposure contribution to COHb levels were calculated by subtracting COHb estimates obtained in the absence of CO exposure—*i.e.,* that due to endogenous CO production alone (*see* REA, Appendix B.6)—from the corresponding end-of-hour absolute COHb estimates for each simulated individual. Thus, the REA reports estimates of the maximum end-of-hour ambient contributions across the simulated year, in addition to the maximum absolute end-of hour COHb levels.

As discussed in the Policy Assessment (section 2.2.2), the absence of indoor (nonambient) sources in the REA simulations is expected to result in simulated individuals with somewhat higher estimates of the contribution of short-duration increases in ambient CO exposure to COHb levels (ambient contribution) than would be expected for individuals in situations where the presence of nonambient sources contributes to higher baseline COHb levels (*i.e.,* COHb prior to a short-duration exposure event). The amount by which the ambient contribution estimates might differ is influenced by the magnitude of nonambient-source exposures and associated baseline COHb levels. One reason for this is that in the presence of indoor sources, baseline COHb levels will be higher for a given population group than COHb levels for that group arising solely from endogenous CO in the absence of any exposure, which is the "baseline" for the REA estimates of ambient contribution to COHb (REA, appendix B.6).[34] As CO uptake depends in part on the amount of CO already present in the blood (and the blood-air CO concentration gradient), in general, a higher baseline COHb, with all other variables unchanged, will lead to relatively lesser uptake of CO from short-duration exposures (ISA, section 4.3; AQCD, section 5.2). Additionally, as is indicated by the REA estimates, the attainment of a particular dose level is driven largely by short-term (and often high concentration) exposure events. This is because of the relatively rapid uptake of CO into a person's blood, as demonstrated by the pattern in the REA time-series of ambient concentrations, microenvironmental exposures, and COHb levels (REA, Appendix B, Figure B–2). For example the time lag for response of an individual's COHb levels to variable ambient CO (and hence exposure) concentrations may be only a few hours (*e.g.,* REA, Figure B–2).

In considering the REA dose estimates in the Policy Assessment, as described in section II.D.2 below, staff considered estimates of the portion of the simulated at-risk populations estimated to experience daily maximum end-of-hour absolute COHb levels above identified benchmark levels (at least once and on multiple occasions), as well as estimates of the percentage of population person-days (the only metric available from the modeling for the 1994 review), and also population estimates of daily maximum ambient contribution to end-of-hour COHb levels. In identifying COHb benchmark levels of interest, primary attention was given to the multi-laboratory study in which COHb was analyzed by the more accurate GC method (Allred *et al.,* 1989a, 1989b, 1991) discussed in section II.B.2 above. The REA identified a series of benchmark levels for considering estimates of absolute COHb: 1.5%, 2.0%, 2.5% and 3% COHb (REA, section 2.6). This range includes the range of COHb levels identified as levels of concern in the review completed in 1994 (2.0 to 2.9%) and the level given particular focus (2.1%) at that time, as described in section 2.1.1 above (USEPA, 1992; 59 FR 48914). Selection of this range of benchmark levels is based on consideration of the evidence from controlled human exposure studies of subjects with CAD (discussed in section 2.2.1 above), with the lower end of the range extending below the lowest mean COHb level resulting from controlled exposure to CO in the clinical evidence (*e.g.,* 2.0% post-exercise in Allred *et al.,* 1989b). The extension of this range reflects a number of considerations, including: (1) Comments from the CASAC CO panel on the draft Scope and Methods Plan (Brain, 2009); (2) consideration of the uncertainties regarding the actual COHb levels experienced in the controlled human exposure studies; (3) that these studies did not include individuals with most severe cardiovascular disease;[35] (4) the lack of studies that have evaluated effects of experimentally controlled short-term CO exposures resulting in mean COHb levels below 2.0–2.4%; and (5) the lack of evidence of a threshold at the increased COHb levels evaluated. We note that CASAC comments on the first draft REA recommended the addition of a benchmark at 1.0% COHb and results are presented for this COHb level in the REA. Given that this level overlaps with the upper part of the range of endogenous levels in healthy individuals as characterized in the ISA (ISA, p. 2–6), and is within the upper

[33] The 8 microenvironments modeled in the REA comprised a range of indoor and outdoor locations including residences as well as motor vehicle-related locations such as inside vehicles, and public parking and fueling facilities, where the highest exposures were estimated (REA, sections 5.9 and 6.1).

[34] As they result only from endogenous CO formation, the REA "baseline" COHb levels would also be expected to be, and generally are, lower than the initial, pre-exposure, COHb levels of subjects in the controlled exposure studies. REA estimates of endogenously formed COHb averaged about 0.3% across the simulated populations, with slightly higher levels in the higher altitude Denver study area (REA, pp. B–21 to B–22). Levels in the Denver study population ranged from 0.1 to 1.1% COHb, with an average of 0.31%, while levels for Los Angeles ranged from 0.1 to 0.7% with an average of 0.27% COHb. Initial, pre-exposure COHb levels in the subjects of the Allred *et al.* study (1989b), which reflect the subjects pre-study exposure history as well as endogenous CO formation, ranged from 0.2 to 1.1%, averaging about 0.6% COHb.

[35] Although the CAD patients evaluated in the controlled human exposure study by Allred *et al.* (1989a, 1989b, 1991) are not necessarily representative of the most sensitive population, the level of disease in these individuals ranged from moderate to severe, with the majority either having a history of myocardial infarction or having ≥70% occlusion of one or more of the coronary arteries (ISA, p. 5–43).

part of the range of baseline COHb levels in the study by Allred *et al* (1989b, Appendix B), however, we considered that it may not be appropriate to place weight on it as a benchmark level and accordingly have not focused on interpreting absolute COHb estimates at and below this level in the discussion below. Additionally we note the REA estimates indicating that, in the absence of CO exposure, approximately 0.5% to 2% of the simulated at-risk populations in the two study areas were estimated to experience a single daily maximum end-of-hour COHb level, arising solely from endogenous CO production, at or above 1% (REA, Appendix B, Figure B–3).

The Policy Assessment also considered the evidence from controlled human exposure studies in interpreting the REA estimates of maximum ambient exposure contributions to end-of-hour COHb levels (described in sections 4.4.7 and 5.10.3 of the REA). As discussed above, the study by Allred *et al* (1989a, 1989b, 1991) observed reduced time to exercise-induced angina and ST-segment change in groups of subjects with pre-existing CAD for which controlled CO exposures increased their COHb levels by on average 1.4–1.8% and 3.2–4.0% COHb from initial COHb levels of on average 0.6% COHb (ISA, section 5.2.4; Allred *et al.,* 1989a, 1989b, 1991). The study reported a dose-response relationship in terms of time reduction per 1% increase in COHb concentration based on analysis of the full data set across both exposure groups. For purposes of the discussion in this document, we have presented the percentage of the simulated at-risk populations estimated to experience maximum ambient contribution to end-of-hour COHb levels above and below a range of levels extending from 1.4 to 2.0%. As noted above, the Policy Assessment recognized distinctions between the REA "baseline" (arising from prior ambient exposure and endogenous CO production) and the pre-exposure COHb levels in the controlled human exposure study (arising from ambient and nonambient exposure history, as well as from endogenous CO production), and also noted the impact of "baseline" COHb levels on COHb levels occurring in response to short ambient CO exposure events such as those simulated in the REA as discussed above.

2. Key Limitations and Uncertainties

Numerous improvements have been made over the last decade that have reduced the uncertainties associated with the models used to estimate COHb levels resulting from ambient CO exposures under different air quality conditions, including those associated with just meeting the current CO NAAQS (REA, section 4.3). This progression in exposure model development has led to the model currently used by the Agency (APEX4.3), which has an enhanced capacity to estimate population CO exposures and more accurately predicts COHb levels in persons exposed to CO. Our application of APEX4.3 in this review, using updated data and new algorithms to estimate exposures and doses experienced by individuals, better represents the variability in population exposure and COHb dose levels than the model version used in previous CO assessments.[36] However, while APEX 4.3 is greatly improved when compared with previously used exposure models, its application is still limited with regard to data to inform our understanding of spatial relationships in ambient CO concentrations and within microenvironments of particular interest. Further information regarding model improvements and remaining exposure modeling uncertainties are summarized in section 2.2.2 of the Policy Assessment and described in detail in chapter 7 of the REA.

The uncertainties associated with the quantitative estimates of exposure and dose were considered using a generally qualitative approach intended to identify and compare the relative impact that important sources of uncertainty may have on the estimated potential health effect endpoints (*i.e.,* estimates of the maximum end-of-hour COHb levels in the simulated at-risk population). The approach used was developed using World Health Organization (WHO) guidelines on conducting a qualitative uncertainty characterization (WHO, 2008) and was also applied in the most recent $NO_2$ (USEPA, 2008c) and $SO_2$ NAAQS reviews (USEPA, 2009e). A qualitative approach was employed given the extremely limited data available to inform probabilistic uncertainty analyses. The qualitative approach used varies from that of WHO (2008) in that a greater focus of the characterization performed was placed on evaluating the direction and the magnitude of the uncertainty; that is, qualitatively rating how the source of uncertainty, in the presence of alternative information, may affect the estimated exposures and health risk results. Additionally, consistent with the WHO (2008) guidance, the REA discusses the uncertainty in the knowledge base (*e.g.,* the accuracy of the data used, acknowledgement of data gaps) and decisions made where possible (*e.g.,* selection of particular model forms), though qualitative ratings were assigned only to uncertainty regarding the knowledge base.

Sixteen separate sources of uncertainty associated with four main components of the assessment were identified. By comparing judgments made regarding the magnitude and direction of influence that the identified sources have on estimated exposure concentrations and dose levels and the existing uncertainties in the knowledge base, seven sources of uncertainty (*i.e.,* the spatial and temporal representation of ambient monitoring data, historical data used in representing alternative air quality scenarios, activity pattern database, longitudinal profile algorithm, microenvironmental algorithm and input data, and physiological factors) were identified as the most important areas of uncertainty in this assessment (PA, section 2.2.2). Taking into consideration improvements in the model algorithms and data since the last review, and having identified and characterized these uncertainties here, the Policy Assessment concludes that the estimates associated with the current analysis, at a minimum, better reflect the full distribution of exposures and dose as compared to results from the 1992 analysis. As noted in the Policy Assessment, however, potentially greater uncertainty remains in our characterization of the upper and lower percentiles of the distribution of population exposures and COHb dose levels relative to that of other portions of the respective distribution. When considering the overall quality of the current exposure modeling approach, the algorithms, and input data used, alongside the identified limitations and uncertainties, the REA and Policy Assessment conclude that the quantitative assessment provides reasonable estimates of CO exposure and COHb dose for the simulated population the assessment is intended to represent (*i.e.,* the population residing within the urban core of each study area).

The Policy Assessment additionally notes the impact on the REA dose estimates for ambient CO contribution to COHb of the lack of nonambient sources in the model simulations. This aspect of the assessment design may contribute to higher estimates of the contribution of short-duration ambient CO exposures to total COHb than would

[36] APEX4.3 provides estimates for percent of population projected to experience a single or multiple occurrences of a daily maximum COHb level above the various benchmark levels, as well as percent of person-days.

result from simulations that include the range of commonly encountered CO sources beyond just those contributing to ambient air CO concentrations. Although the specific quantitative impact of this on estimates of population percentages discussed in this document is unknown, consideration of COHb estimates from the 2000 assessment indicates a potential for the inclusion of nonambient sources to appreciably affect absolute COHb (REA, section 6.3) and accordingly implies the potential, where present, for an impact on overall ambient contribution to a person's COHb level.

*D. Conclusions on Adequacy of the Current Standards*

The initial issue to be addressed in the current review of the primary CO standards is whether, in view of the advances in scientific knowledge and additional information now available, the existing standards should be retained or revised. In evaluating whether it is appropriate to retain or revise the current standards, the Administrator builds upon the last review and reflects the broader body of evidence and information now available. The Administrator has taken into account both evidence-based and quantitative exposure- and risk-based considerations in developing conclusions on the adequacy of the current primary CO standards. Evidence-based considerations include the assessment of evidence from controlled human exposure, toxicological and epidemiological studies evaluating short- or long-term exposures to CO, with supporting evidence related to dosimetry and potential mode of action, as well as the integration of evidence across each of these disciplines, and with a focus on policy-relevant considerations as discussed in the PA. The exposure/dose-based considerations draw from the results of the quantitative analyses presented in the REA and summarized in section II.C above, and consideration of those results in the PA. More specifically, estimates of the magnitude of ambient CO-related exposures and associated COHb levels associated with just meeting the current primary CO NAAQS have been considered. Together the evidence-based and risk-based considerations have informed the Administrator's proposed conclusions related to the adequacy of the current CO standards in light of the currently available scientific evidence.

1. Approach

In considering the evidence and quantitative exposure and dose estimates with regard to judgments on the adequacy afforded by the current standards, we note that the final decision is largely a public health policy judgment. A final decision must draw upon scientific information and analyses about health effects and risks, as well as judgments about how to consider the range and magnitude of uncertainties that are inherent in the scientific evidence and analyses. Our approach to informing these judgments, discussed more fully below, is based on the recognition that the available health effects evidence generally reflects a continuum, consisting of ambient levels at which scientists generally agree that health effects are likely to occur, through lower levels at which the likelihood and magnitude of the response become increasingly uncertain. This approach is consistent with the requirements of the NAAQS provisions of the Act and with how EPA and the courts have historically interpreted the Act. These provisions require the Administrator to establish primary standards that, in the Administrator's judgment, are requisite to protect public health with an adequate margin of safety. In so doing, the Administrator seeks to establish standards that are neither more nor less stringent than necessary for this purpose. The Act does not require that primary standards be set at a zero-risk level, but rather at a level that avoids unacceptable risks to public health, including the health of sensitive groups.[37]

The following subsections include background information on the approach used in the previous review of the CO standards (section II.D.1.a) and also a description of the approach for the current review (section II.D.1.b).

a. Previous Reviews

The current primary standards for CO are set at 9 parts per million (ppm) as an 8-hour average and 35 ppm as a 1-hour average, neither to be exceeded more than once per year. These standards were initially set in 1971 to protect against the occurrence of carboxyhemoglobin (COHb) levels that may be associated with effects of concern (36 FR 8186). Reviews of these standards in the 1980s and early 1990s identified additional evidence regarding ambient CO, CO exposures, COHb levels, and associated health effects (USEPA, 1984a, 1984b; USEPA, 1991; USEPA, 1992; McClellan, 1991, 1992). Assessment of the evidence in those reviews, completed in 1985 and 1994, led the EPA to retain the existing primary standards without revision (50 FR 37484, 59 FR 38906).

The 1994 decision to retain the primary standards without revision was based on the evidence published through 1990 and reviewed in the 1991 AQCD (USEPA, 1991), the 1992 Staff Paper assessment of the policy-relevant information contained in the AQCD and the quantitative exposure assessment (USEPA, 1992), and the advice and recommendations of CASAC (McClellan 1991, 1992). At that time, as at the time of the first NAAQS review (50 FR 37484), COHb levels in blood were recognized as providing the most useful estimate of exogenous CO exposures and serving as the best biomarker of CO toxicity for ambient-level exposures to CO (59 FR 38909). Consequently, COHb levels were used as the indicator of health effects in the identification of health effect levels of concern for CO (59 FR 38909).

In reviewing the standards in 1994 the Administrator first recognized the need to determine the COHb levels of concern "taking into account a large and diverse health effects database." The more uncertain and less quantifiable evidence was taken into account to identify the lower end of this range to provide an adequate margin of safety for effects of clear concern. To consider ambient CO concentrations likely to result in COHb levels of concern, a model solution to the Coburn-Forster-Kane (CFK) differential equation was employed in the analysis of CO exposures expected to occur under air quality scenarios related to just meeting the current 8-hour CO NAAQS, the controlling standard (USEPA, 1992).[38] Key considerations in this approach are described below.

The assessment of the science that was presented in the 1991 AQCD (USEPA, 1991) indicated that CO is associated with effects in the cardiovascular system, central nervous system (CNS), and the developing fetus. Additionally, factors recognized as having the potential to alter the effects

[37] The sensitive population groups identified in a NAAQS review may (or may not) be comprised of low income or minority groups. Where low income/minority groups are among the sensitive groups, the rulemaking decision will be based on providing protection for these and other sensitive population groups. To the extent that low income/minority groups are not among the sensitive groups, a decision based on providing protection of the sensitive groups would be expected to provide protection for the low income/minority groups (as well as any other less sensitive population groups).

[38] Air quality analyses of CO levels in the U.S. consistently demonstrate that meeting the 8-hour standard results in 1-hour maximum concentrations well below the corresponding 1-hour standard.

of CO included exposures to other pollutants, some drugs and some environmental factors, such as altitude. Cardiovascular effects of CO, as measured by decreased time to onset of angina and to onset of significant electrocardiogram (ECG) ST-segment depression were judged by the Administrator to be "the health effects of greater concern, which clearly had been associated with CO exposures at levels observed in ambient air" (59 FR 38913).

Based on the consistent findings of response in patients with coronary artery disease across the controlled human exposure evidence (Adams *et al.,* 1988; Allred *et al.,* 1989a, 1989b, 1991; Anderson *et al.,* 1973; Kleinman *et al.,* 1989, 1998; Sheps *et al.,* 1987 [39]) and discussions of adverse health consequences in the 1991 AQCD and the 1992 Staff Paper,[40] at the CASAC meetings and in the July 1991 CASAC letter, the Administrator concluded that "CO exposures resulting in COHb levels of 2.9–3.0 percent (CO–Ox) or higher in persons with heart disease have the potential to increase the risk of decreased time to onset of angina pain and ST-segment depression" (59 FR 38913). While EPA and CASAC recognized the existence of a range of views among health professionals on the clinical significance of these responses, CASAC noted that the dominant view was that they should be considered "adverse or harbinger of adverse effect" (McClellan, 1991) and EPA recognized that it was "important that standards be set to appropriately reduce the risk of ambient exposures which produce COHb levels that could induce such potentially adverse effects" (59 FR 38913).

In further considering additional results from the controlled human exposure evidence, such as the results from Allred *et al.* (1989a, 1989b) at 2.0% COHb (using GC measurement) induced by short (approximately 1-hour) CO exposure, as well as other aspects of the available evidence and uncertainties regarding modeling estimates of COHb formation and human exposure to COHb levels in the population associated with attainment of a given CO NAAQS, the Administrator recognized the need to extend the range of COHb levels for consideration in evaluating whether the current CO standards provide an adequate margin of safety to those falling between 2.0 to 2.9% COHb (59 FR 38913). Factors considered in recognizing this margin of safety included the following (59 FR 38913).

- Uncertainty regarding the clinical importance of cardiovascular effects associated with exposures to CO that resulted in COHb levels of 2 to 3 percent. Although recognizing the possibility that there is no threshold for these effects even at lower COHb levels, the clinical importance of cardiovascular effects associated with short (approximately 1-hour) exposures to CO resulting in COHb levels as low as 2.0% COHb by GC (Allred *et al.,* 1989a,b) was described as "less certain" than effects noted for exposures contributing to higher COHb (CO–Ox) levels (59 FR 38913).
- Findings of short-term reduction in maximal work capacity measured in trained athletes exposed to CO at levels resulting in COHb levels of 2.3 to 7 percent.
- The potential that the most sensitive individuals have not been studied, the limited information regarding the effects of ambient CO in the developing fetus, and concern about visitors to high altitudes, individuals with anemia or respiratory disease, or the elderly.
- Potential for short term peak CO exposures to be responsible for impairments (impairment of visual perception, sensorimotor performance, vigilance or other CNS effects) which could be a matter of concern for complex activities such as driving a car, although these effects had not been demonstrated to be caused by CO concentrations in ambient air.
- Concern based on limited evidence for individuals exposed to CO concurrently with drugs (*e.g.,* alcohol), during heat stress, or co-exposure to other pollutants.
- Uncertainties, described as "large," that remained regarding modeling COHb formation and estimating human exposure to CO which could lead to overestimation of COHb levels in the population associated with attainment of a given CO NAAQS.
- Uncertainty associated with COHb measurements made using CO–Ox which may not reflect COHb levels in angina patients studied, thereby creating uncertainty in establishing a lowest effects level for CO.

Based on these considerations of the evidence, the Administrator identified a range of COHb levels for considering margin of safety, extending from 2.9% COHb (representing an increase of 1.5% above baseline when using CO–Ox measurements) at the upper end down to 2% at the lower end (59 FR 38913), and also concluded that "evaluation of the adequacy of the current standard should focus on reducing the number of individuals with cardiovascular disease from being exposed to CO levels in the ambient air that would result in COHb levels of 2.1 percent" (59 FR 38914). She additionally concluded that standards that "protect against COHb levels at the lower end of the range should provide an adequate margin of safety against effects of uncertain occurrence, as well as those of clear concern that have been associated with COHb levels in the upper-end of the range" (59 FR 38914).

To estimate CO exposures and resulting COHb levels that might be expected under air quality conditions that just met the current standards, an analysis of exposure and associated internal dose in terms of COHb levels in the population of interest in the city of Denver, Colorado was performed (59 FR 38906; USEPA, 1992). That analysis indicated that if the 9 ppm 8-hour standard were just met, the proportion of the nonsmoking population with cardiovascular disease experiencing a daily maximum 8-hour exposure at or above 9 ppm for 8 hours decreased by an order of magnitude or more as compared to the proportion under then-existing CO levels, down to less than 0.1 percent of the total person-days in that population. Further, upon meeting the 8-hour standard, EPA estimated that less than 0.1% of the nonsmoking cardiovascular-disease population would experience a COHb level greater than or equal to 2.1% and a smaller percentage of the at-risk population was estimated to exceed higher COHb levels (59 FR 38914).[41] Based on these estimates, the Administrator concluded that "relatively few people of the cardiovascular sensitive population group analyzed will experience COHb levels ≥ 2.1 percent when exposed to CO levels in absence of indoor sources when the current standards are attained." The analysis also took into account that certain indoor sources (*e.g.,* passive smoking, gas stove usage) contributed to total CO exposure and EPA recognized that such sources may be of concern for such high risk groups

[39] *See* footnote 15 above.

[40] Based on consideration of the key studies, including those two that investigated more than a single target COHb level, discussions in the 1991 AQCD and with CASAC, the 1992 Staff Paper recommended that "2.9–3.0% COHb (CO–Ox), representing an increase above initial COHb of 1.5 to 2.2% COHb, be considered a level of potential adversity for individuals at risk" (59 FR 38911; USEPA, 1992; USEPA, 1991, pp. 1–11 to 1–12; Allred *et al.,* 1989a, 1989b, 1991; Anderson *et al.,* 1973).

[41] In the 1992 assessment, the person-days (number of persons multiplied by the number of days per year exposed) and person-hours (number of persons multiplied by the number of hours per year exposed) were the reported exposure metrics. Upon meeting the 8-hour standard, it was estimated that less than 0.1% of the total person-days simulated for the nonsmoking cardiovascular-disease population were associated with a maximum COHb level greater than or equal to 2.1% (USEPA, 1992; Johnson *et al.,* 1992).

as individuals with cardiovascular disease, pregnant women, and their unborn children but concluded that "the contribution of indoor sources cannot be effectively mitigated by ambient air quality standards" (59 FR 38914).

Based on consideration of the evidence and the quantitative results of the exposure assessment, the Administrator concluded that revisions of the current primary standards for CO were not appropriate at that time (59 FR 38914). The Administrator additionally concluded that both averaging times for the primary standards, 1 hour and 8 hours, be retained. The 1-hour and 8-hour averaging times were first chosen when EPA promulgated the primary NAAQS for CO in 1971. The selection of the 8-hour averaging time was based on the following: (a) Most individuals' COHb levels appeared to approach equilibrium after 8 hours of exposure, (b) the 8-hour time period corresponded to the blocks of time when people were often exposed in a particular location or activity (*e.g.,* working or sleeping), and (c) judgment that this provided a good indicator for tracking continuous exposures during any 24-hour period. The 1-hour averaging time was selected as better representing a time period of interest to short-term CO exposure and providing protection from effects which might be encountered from very short duration peak exposures in the urban environment (59 FR 38914).

b. Current Review

To evaluate whether it is appropriate to consider retaining the current primary CO standards, or whether consideration of revisions is appropriate, we adopted an approach in this review that builds upon the general approach used in the last review and reflects the broader body of evidence and information now available. As summarized above, the Administrator's decisions in the previous review were based on an integration of information on health effects associated with exposure to ambient CO; expert judgment on the adversity of such effects on individuals; and a public health policy judgment as to what standard is requisite to protect public health with an adequate margin of safety, which were informed by air quality and related analyses, quantitative exposure and risk assessments when possible, and qualitative assessment of impacts that could not be quantified. Similarly, in this review, as described in the Policy Assessment, we draw on the current evidence and quantitative assessments of exposure pertaining to the public health risk of ambient CO. In considering the scientific and technical information, here as in the Policy Assessment, we consider both the information available at the time of the last review and information newly available since the last review, including the current ISA and the 2000 AQCD (USEPA, 2010a; USEPA, 2000), as well as current and preceding quantitative exposure/dose assessments (USEPA 2010b; Johnson *et al.,* 2000; USEPA 1992).

As described earlier, at this time as at the time of the last review, the best characterized health effect associated with CO levels of concern is hypoxia (reduced oxygen availability) induced by increased COHb levels in blood (ISA, section 5.1.2). Accordingly, CO exposure is of particular concern for those with impaired cardiovascular systems, and the most compelling evidence of cardiovascular effects is that from a series of controlled human exposure studies among exercising individuals with CAD (ISA, sections 5.2.4 and 5.2.6). Additionally available in this review are a number of epidemiological studies that investigated the association of cardiovascular disease-related health outcomes with concentrations of CO at ambient monitors. To inform our review of the ambient standards, we performed a quantitative exposure and dose modeling analysis that estimated COHb levels associated with different air quality conditions in simulated at-risk populations in two U.S. cities, as described in detail in the REA and summarized in the Policy Assessment (PA, section 2.2.2). Thus, in developing conclusions with regard to the CO NAAQS, EPA has taken into account both evidence-based and exposure/dose-based considerations.

The approach to reaching a decision on the adequacy of the current primary standards is framed by consideration of the following series of key policy-relevant questions.

- Does the currently available scientific evidence- and exposure/dose/risk-based information, as reflected in the ISA and REA, support or call into question the adequacy of the protection afforded by the current CO standards?
- Does the current evidence alter our conclusions from the previous review regarding the health effects associated with exposure to CO?
- Does the current evidence continue to support a focus on COHb levels as the most useful indicator of CO exposures and the best biomarker to characterize potential for health effects associated with exposures to ambient CO? Or does the current evidence provide support for a focus on alternate dose indicators to characterize potential for health effects?
- Does the current evidence alter our understanding of populations that are particularly susceptible to CO exposures? Is there new evidence that suggest additional susceptible populations that should be given increased focus in this review?
- Does the current evidence alter our conclusions from the previous review regarding the levels of CO in ambient air associated with health effects?
- To what extent have important uncertainties identified in the last review been reduced and/or have new uncertainties emerged?

The following sections describe the assessment of these issues in the Policy Assessment, the advice received from CASAC, as well as the comments received from various parties, and then presents the Administrator's proposed conclusions regarding the adequacy of the current primary standards.

2. Evidence-Based and Exposure/Dose-Based Considerations in the Policy Assessment

The Policy Assessment (chapter 2) considers the evidence presented in the Integrated Science Assessment, and preceding AQCDs, as discussed above in section II.B as a basis for evaluating the adequacy of the current CO standards, recognizing that important uncertainties remain. The Policy Assessment concludes that the combined consideration of the body of evidence and the results from the quantitative exposure and dose assessment provide support for standards at least as protective as the current suite of standards to provide appropriate public health protection for susceptible populations, including most particularly individuals with cardiovascular disease, against effects of CO in exacerbating conditions of reduced oxygen availability to the heart (PA, section 2.4). More specifically, the Policy Assessment concludes that the combined consideration of the evidence and quantitative estimates from the REA may be viewed as providing support for either retaining or revising the current suite of standards (PA, p. 2–59). CASAC stated agreement with this conclusion, while additionally expressing a "preference" for revisions to a lower standard. Members of the public who provided comments on the draft Policy Assessment supported retaining the current standard without revision. The specific considerations on which the Policy Assessment conclusions are based are described in the subsections below.

a. Evidence-Based Considerations

In considering the evidence available for the current review of the CO NAAQS, the Policy Assessment discussed whether or not, or the extent to which, the current evidence alters conclusions reached in the previous review regarding levels of CO in ambient air associated with health effects and associated judgments on adequacy of the current standards. With this discussion, the Policy Assessment also considered the extent to which important uncertainties identified in the last review have been reduced or new uncertainties have emerged.

As an initial matter, the Policy Assessment recognized that at the time of the last review, EPA's conclusions regarding the adequacy of the existing CO standards were drawn from the combined consideration of the evidence of COHb levels for which cardiovascular effects of concern had been reported and the results of an exposure and dose modeling assessment (59 FR 38906). As described in more detail above, the key effects judged to be associated with CO exposures resulting from concentrations observed in ambient air were cardiovascular effects, as measured by decreased time to onset of exercise-induced angina and to onset of ECG ST-segment depression (59 FR 38913). As at the time of the last review, the Policy Assessment noted that the evidence available in this review includes multiple studies that document decreases in time to onset of exercise-induced angina (a symptom of myocardial ischemia) in multiple studies at post-exposure COHb levels ranging from 2.9 to 5.9% (CO–Ox), which represent incremental increases of approximately 1.4–4.4% COHb from baseline (CO–Ox) (PA, Table 2–2; Adams *et al.,* 1988; Allred *et al.,* 1989a, 1989b, 1991; Anderson *et al.,* 1973; Kleinman *et al.,* 1989, 1998 [42]; Sheps *et al.,* 1987 [43]). The study results from Allred *et al.* (1989a, 1989b, 1991) also provide evidence for these effects in terms of COHb measurements using gas chromatography.[44] [45] Evidence also available at the time of the last review of effects in other clinical study groups includes effects in subjects with cardiac arrhythmias and effects on exercise duration and maximal aerobic capacity in healthy adults. Among the studies of myocardial ischemia indicators in patients with CAD, none provide evidence of a measurable threshold at the lowest experimental CO exposures and associated COHb levels assessed (*e.g.,* mean of 2.0–2.4% COHb, GC) which resulted in average increases in COHb of about 1.5% over pre-exposure baseline (Anderson *et al.,* 1973; Kleinman *et al.,* 1989; Allred *et al.* 1989a, 1989b, 1991).[46] Allred *et al.* (1989a, 1989b, 1991) further reported a dose-response relationship between the increased COHb levels and the response of the assessed indicators of myocardial ischemia (Allred *et al.,* 1989a, 1989b, 1991). While this evidence informs our conclusions regarding COHb levels associated with health effects, the CO exposure concentrations employed in the studies to achieve these COHb levels were substantially above ambient concentrations. Thus, an exposure and dose assessment was performed to consider the COHb levels that might be attained as a result of exposures to ambient CO allowed under the current NAAQS, as described in section II.C above.

Since the time of the last review, there have been no new controlled human exposure studies specifically designed to evaluate the effects of CO exposure in susceptible populations at study mean COHb levels at or below 2% COHb. Thus, similar to the last review, the multilaboratory study by Allred *et al.* (1989a, 1989b, 1991) continues to be the study that has evaluated cardiovascular effects of concern (*i.e.,* reduced time to exercise-induced myocardial ischemia as indicated by ECG ST-segment changes and angina) at the lowest tested COHb levels (ISA, section 2.7). This study is also of particular importance in this review because it is considered the most rigorous and well designed study, presenting the most sensitive analysis methods (GC used in addition to CO–Ox) to quantify COHb blood levels. Key findings from that study with regard to levels of CO associated with health effects, as discussed in section II.B.2 above, include the following:

- Short (50–70 minute) exposure to increased CO concentrations that resulted in increases in COHb to mean levels of 2.0% and 3.9% (post-exercise) from mean a baseline level of 0.6% significantly reduced exercise time required to induce markers of myocardial ischemia in CAD patients. For the more objective marker of ST-segment change, the lower exposure reduced the time to onset by 5.1% (approximately one half minute) and the higher exposure reduced the time to onset by 12.1%.[47]
- The associated dose-response relationship between incremental changes in COHb and change in time to myocardial ischemia in CAD patients indicates a 1.9% and 3.9% reduction in time to onset of exercise-induced angina and ST-segment change, respectively, per 1% increase in COHb concentration from average baseline COHb of 0.6% without evidence of a measurable threshold.

As described in section II.B.2 above, a number of epidemiological studies of health outcome associations with ambient CO have been conducted since the last review. These include studies that have reported associations with different ambient CO metrics (*e.g.,* 1-hour and 8-hour averages, often as central-site estimates) derived from CO measurements at fixed-site ambient monitors in selected urban areas of the U.S. and cardiovascular endpoints other than stroke, particularly hospitalizations and emergency department visits for specific cardiovascular health outcomes including IHD, CHF and CVD (Bell *et al.,* 2009; Koken *et al.,* 2003; Linn *et al.,* 2000; Mann *et al.,* 2002; Metzger *et al.,* 2004; Symons *et al.,* 2006; Tolbert *et al.,* 2007; Wellenius *et al.,* 2005). In general, these studies, many of which were designed to evaluate the effects of a variety of air pollutants, including CO, report positive associations, a number of which are statistically significant (ISA, sections 5.2.3 and 5.2.1.9). The long-standing body of evidence for CO summarized above, including the well-characterized role of CO in limiting oxygen availability, lends biological plausibility to the ischemia-related health outcomes reported in the epidemiological studies, providing coherence between these studies and the clinical evidence of short-term exposure to CO and health effects. Thus, although there is no new evidence

[42] One new study of this type is available since the 1994 review. This study, which focused on a target COHb level of 3.9% COHb (CO–Ox) and is discussed in the 2000 AQCD is generally consistent with the previously available studies (2000 AQCD, section 6.2.2; Kleinman *et al.,* 1998).

[43] *See* footnote 15 above.

[44] Gas chromatography is generally recognized to be the more accurate method for COHb levels below 5% (ISA, section 5.2.4).

[45] In the lower CO exposure group, the post-exposure mean COHb was 3.21% by CO–Ox and 2.38% by GC, while the post-exercise mean COHb was 2.65% by CO–Ox and 2.00% by GC (Allred *et al.,* 1989a, 1989b, 1991).

[46] The studies by Anderson *et al.* (1973) and Kleinman *et al.* (1989) did not use GC to measure COHb levels, and reported reduced exercise duration due to increased chest pain at CO exposures resulting in 2.8–3.0% COHb (CO–Ox). The COHb levels assessed in these two studies represented increase in average COHb levels over baseline of 1.4% and 1.6% COHb.

[47] Across all subjects, the mean time to angina onset for baseline or control ("clean" air) exposures was approximately 8.5 minutes, and the mean time to ST endpoint was approximately 9.5 minutes, with the "time to onset" reductions of the two exposure levels being approximately one half and one minute, respectively for ST-segment change, and slightly less and slightly more than one half minute, respectively, for angina (Allred *et al.,* 1989b).

regarding the effects of short-term controlled CO exposures that result in lower COHb levels, the evidence is much expanded with regard to epidemiological[48] analyses of ambient monitor concentrations, which observed associations between specific and overall cardiovascular-related outcomes and ambient CO measurements.

The Policy Assessment considered the combined evidence base for CO cardiovascular effects in the context of a conceptual model of the pathway from CO exposures to the occurrence of these effects (as described in section 2.2.1 of the PA). In this context, the Policy Assessment noted differences between the controlled human exposure and epidemiological studies, described above, with regard to the elements along this pathway that have been investigated in those studies. The controlled human exposure studies document relationships between directly measured controlled short-term CO exposures and specific levels of an internal dose metric, COHb, which elicited specific myocardial ischemia-related responses in CAD patients. These studies inform our interpretation of the associations we observed in the epidemiological studies. The epidemiological studies reported associations between CO levels measured at fixed-site monitors and emergency department visits and/or hospital admissions for IHD and other cardiovascular disease-related outcomes that are plausibly related to the effects on physiological indicators of myocardial ischemia (*e.g.,* ST-segment changes) demonstrated in the controlled human exposure studies, providing coherence between the two sets of findings (ISA, p. 5–48). With regard to extending our understanding of effects occurring below levels of CO evaluated in the controlled human exposure studies, however, the epidemiological evidence for CO is somewhat limited. The epidemiological evidence lacks measurements of COHb or personal exposure concentrations that would facilitate integration with the controlled human exposure study data. Furthermore, the epidemiological evidence base for IHD outcomes or CVD outcomes as a whole includes a number of studies involving conditions in which the current standard was not met. Though these studies are informative to consideration of the relationship of health effects to the full range of ambient CO concentrations, the Policy Assessment indicated that they are less useful to informing our conclusions regarding adequacy of the current standards.

As discussed in the Policy Assessment, the smaller set of epidemiological studies, under conditions where the current standards were met, is considered to better inform our assessment of the adequacy of the standards or conditions of lower ambient concentrations. Among the few studies conducted during conditions in which the current standards were always met, however, the studies reporting statistical significance for IHD or all CVD outcomes are limited to a single study area (*i.e.* Atlanta). When the analyses reporting significance for association with CHF outcomes are also considered, a second study area is identified (Allegheny County, PA) in which the current standard is met throughout the study period. The analyses for both areas involve the use of central site monitor locations or area-wide average concentrations, which given the significant concentration gradients of CO in urban areas (ISA, section 3.6.8.2), complicates our ability to draw conclusions from them regarding ambient CO concentrations of concern. Therefore, the Policy Assessment primarily focused consideration of the epidemiological studies on the extent to which this evidence is consistent with and generally supportive of conclusions drawn from the combined consideration of the controlled human exposure evidence with estimates from the exposure and dose assessment, as discussed below. The Policy Assessment indicated that, as in the previous review, the integration of the controlled human exposure evidence with the exposure and dose estimates will be most important to informing conclusions regarding ambient CO concentrations of public health concern.

With regard to areas of uncertainty, the Policy Assessment recognized that some important uncertainties have been reduced since the time of the last review, some still remain and others, associated with newly available evidence, have been identified. This range of uncertainties identified at the time of the last review (59 FR 38913, USEPA, 1992), as well as any newly identified uncertainties were considered in the Policy Assessment as discussed below (PA, section 2.2.1).

The CO-induced effects considered of concern at the time of the last review were reduced time to exercise-induced angina and ST-segment depression in patients suffering from coronary artery disease as a result of increases in COHb associated with short CO exposures. These effects had been well documented in multiple studies, and it was recognized that the majority of cardiologists at the time believed that recurrent exercise-induced angina was associated with substantial risk of precipitating myocardial infarction, fatal arrhythmia, or slight but cumulative myocardial damage (USEPA, 1992, p. 22; 59 FR 38911; Basan, 1990; 1991 AQCD). As at the time of the last review, although ST-segment depression is a recognized indicator of myocardial ischemia, the exact physiological significance of the observed changes among individuals with CAD is unclear (ISA, p. 5–48).

In interpreting the study results at the time of the last review, EPA recognized uncertainty in the COHb measurements made using CO–Ox and associated uncertainty in establishing a lowest effects level for CO (USEPA, 1992, p. 31). A then-recent multicenter study (Allred *et al.,* 1989a, 1989b, 1991) was of great importance at that time for reasons identified above. Similarly, the Science and Policy Assessments place primary emphasis on the findings from this study in the current review of the evidence related to cardiovascular effects associated with CO exposure, recognizing the superior quality of the study, both in terms of the rigorous study design as well as the sensitivity of the analytical methods used in determining COHb concentrations (ISA, section 2.7). No additional controlled human exposure studies are available that evaluate responses to lower COHb levels in the cardiovascular-disease population, and uncertainties still remain in determining specific and quantitative relationships between the CO-induced effects in these studies and the increased risk of specific health outcomes. Further, with regard to then-unidentified effects at lower COHb levels, no studies have identified other effects on the CAD population or on other populations at lower exposures (ISA, sections 5.2.2).

The last review recognized uncertainty with regard to the potential for short-term CO exposures to contribute to CNS effects which might affect an individual's performance of complex activities such as driving a car or to contribute to other effects of concern. It was concluded, however, that the focus of the review on cardiovascular effects associated with COHb levels below 5% also provided adequate protection against potential

[48] Few epidemiological studies that had investigated the relationship between CO exposure and ischemic heart disease were available at the time of the last completed review (1991 AQCD, section 10.3.3).

adverse neurobehavioral effects.[49] No new controlled human exposure studies have evaluated CNS or behavioral effects of exposure to CO (ISA, section 5.3.1). However, given the drastic reduction in CO ambient concentrations, the Policy Assessment concludes that occurrence of these effects in response to ambient CO would be expected to be rare within the current population. Thus, the Policy Assessment concludes that uncertainty with regard to the potential for such effects to be associated with current ambient CO exposures is reduced (PA, p. 2–35).

Since the 1994 review, the epidemiologic and toxicological evidence of effects on birth and developmental outcomes has expanded, although the available evidence is still considered limited with regard to effects on preterm birth, birth defects, decreases in birth weight, measures of fetal growth, and infant mortality (ISA, section 5.4). Further, while animal toxicological studies provide support and coherence for those effects, the understanding of the mechanisms underlying reproductive and developmental effects is still lacking (ISA, section 5.4.1). Thus, the Policy Assessment recognizes that although the evidence continues to "suggest[s] that critical developmental phases may be characterized by enhanced sensitivity to CO exposure" (ISA, p. 2–11), evidence is lacking for adverse developmental or reproductive effects at CO exposure concentrations near those associated with current levels of ambient CO (PA, pp. 2–35 to 2–36).

As described above, the much-expanded epidemiologic database in the current review includes studies that show associations between ambient CO concentrations and increases in emergency room visits and hospitalizations for disease events plausibly linked to the effects observed in the controlled human exposure studies of CAD patients (ISA, section 2.5.1), providing support for the ISA's conclusion regarding coronary artery disease as the most important susceptibility characteristic for increased health risk due to CO exposure (ISA, p. 2–10). However, the Policy Assessment recognizes aspects of this epidemiological evidence that complicate quantitative interpretation of it with regard to ambient concentrations that might be eliciting the reported health outcomes. As an initial matter, the Policy Assessment notes the substantially fewer studies conducted in areas meeting the current CO standards than is the case for $NO_2$ and PM (USEPA, 2008d, 2009f). Further, the Policy Assessment recognizes complicating aspects of the evidence that relate to conclusions regarding CO as the pollutant eliciting the effect reported in the epidemiological studies and to our understanding of the ambient CO and nonambient concentrations to which study subjects demonstrating these outcomes are exposed.

With regard to these complications, the Policy Assessment first considers the extent to which the use of two-pollutant regression models, a commonly used statistical method (ISA, section 1.6.3), inform conclusions regarding CO as the pollutant eliciting the effects in these studies (PA, pp. 2–36 to 2–37). Although CO associations, in some studies, are slightly attenuated in models that adjusted for other combustion-related pollutants (*e.g.,* $PM_{2.5}$ or $NO_2$), they generally remain robust (ISA, Figures 5–6 and 5–7).[50] In considering these two-pollutant model results, however, the Policy Assessment recognizes the potential for there to be etiologically relevant pollutants that are correlated with CO yet absent from the analysis. Similarly, CASAC commented that "the problem of co-pollutants serving as potential confounders is particularly problematic for CO". They stated that "consideration needs to be given to the possibility that in some situations CO may be a surrogate for exposure to a mix of pollutants generated by fossil fuel combustion" and "a better understanding of the possible role of co-pollutants is relevant to * * * the interpretation of epidemiologic studies on the health effects of CO" (Brain and Samet, 2010d). This issue is particularly important in the case of CO in light of uncertainty associated with CO-related effects at low ambient concentrations (discussed below) and in light of the sizeable portion of ambient CO measurements that are at or below monitor detection limits. Consequently, the extent to which multi-pollutant regression models effectively disentangle and quantitatively interpret a CO-specific effect distinct from that of other pollutants remains an area of uncertainty.

In considering ambient concentrations that may be triggering health outcomes analyzed in the epidemiological studies, the Policy Assessment recognizes the uncertainty introduced by exposure error. Exposure error can occur when a surrogate is used for the actual ambient exposure experienced by the study population (*e.g.,* ISA, section 3.6.8). There are two aspects to the epidemiological studies in the specific case of CO, as contrasted with the cases of other pollutants such as $NO_2$ and PM, that may contribute to exposure error in the CO studies. The first relates to the low concentrations of CO considered in the epidemiological studies and monitor detection limits. The second relates to the use in the epidemiological studies of area-wide or central-site monitor CO concentrations in light of information about the gradient in CO concentrations with distance from source locations such as highly-trafficked roadways (ISA, section 3.5.1.3).

As discussed in the Policy Assessment, uncertainty in the assessment of exposure to ambient CO concentrations is related to the prevalence of ambient CO monitor concentrations at or below detection limits, which is a greater concern for the more recently available epidemiological studies in which the study areas have much reduced ambient CO concentrations compared with those in the past (PA, pp. 2–37 to 2–38). For example, the ISA notes that roughly one third of the 1-hour ambient CO measurements reported to AQS for 2005–2007 were below the method limit of detection for the monitors analyzed (ISA, p. 3–34). A similarly notable proportion of measurements occur below the monitor detection limit for epidemiological study areas meeting the current standards (*e.g.,* Atlanta, Allegheny County) (PA, Appendix B). This complicates our interpretation of specific ambient CO concentrations associated with health effects (ISA, p. 3–91; Brain and Samet, 2010d). In contrast to CO, other combustion-related criteria pollutants such as $PM_{2.5}$ and $NO_2$ generally occur above levels of detection, providing us with greater confidence in quantitative interpretations of epidemiological studies for those pollutants.

There are also differences in the spatial variability associated with $PM_{2.5}$ and $NO_2$ concentrations as compared to CO concentrations that add complexity

[49] The evidence available at the time of the last review was based on a series of studies conducted from the mid 1960's through the early 1990's, with inconsistent findings of neurological effects at exposures to CO resulting in COHb levels ranging from 5–20% (1991 AQCD).

[50] In interpreting the epidemiological evidence for cardiovascular morbidity the ISA notes that it "is difficult to determine from this group of studies the extent to which CO is independently associated with CVD outcomes or if CO is a marker for the effects of another traffic-related pollutant or mix of pollutants. On-road vehicle exhaust emissions are a nearly ubiquitous source of combustion pollutant mixtures that include CO and can be an important contributor to CO in near-road locations. Although this complicates the efforts to disentangle specific CO-related health effects, the evidence indicates that CO associations generally remain robust in copollutant models and supports a direct effect of short-term ambient CO exposure on CVD morbidity." (ISA, pp. 5–40 to 5–41).

to the estimation of CO exposures in epidemiological studies. In general, $PM_{2.5}$ concentrations tend to be more spatially homogenous across an urban area than CO concentrations. CO concentrations in urban areas are largely driven by mobile sources, while urban $PM_{2.5}$ concentrations substantially reflect contributions from mobile and a variety of stationary sources. The greater spatial homogeneity in $PM_{2.5}$ concentrations is due in part to the transport and dispersion of small particles from the multiple sources (USEPA, 2009f, sections 3.5.1.2 and 3.9.1.3), as well as to contributions from secondarily formed components "produced by the oxidation of precursor gases (*e.g.,* sulfur dioxide and nitrogen oxides) and reactions of acidic products with $NH_3$ and organic compounds" (USEPA, 2009f, p. 3–185), which likely contribute to spatial homogeneity. Similarly, "because $NO_2$ in the ambient air is due largely to the atmospheric oxidation of NO emitted from combustion sources (ISA, section 2.2.1), elevated $NO_2$ concentrations can extend farther away from roadways than the primary pollutants also emitted by on-road mobile sources" (40 FR 6479, February 9, 2010). In contrast to $PM_{2.5}$ and $NO_2$, CO is not formed through common atmospheric oxidation processes, which may contribute to the steeper CO gradient observed near roadways. Therefore, the misclassification of exposure arising from the utilization of central site monitors to measure $PM_{2.5}$ and $NO_2$ exposures is likely to be smaller than is the case for CO exposures.

An additional complication to a comparison of our consideration of the CO epidemiological evidence to that for other criteria pollutants is that, in contrast to the situation for all other criteria pollutants, the epidemiological studies for CO use a different exposure/dose metric from that which is the focus of the broader health evidence base, and additional information that might be used to bridge this gap is lacking. In the case of CO, the epidemiological studies use air concentration as the exposure/dose metric, while the broader health effects evidence for CO demonstrates and focuses on an internal biomarker of CO exposure (COHb) which has been considered a critical key to CO toxicity. In the case of the only other criteria pollutant for which the health evidence relies on an internal dose metric—lead—the epidemiological studies also use that metric.[51] For other criteria pollutants, including PM and $NO_2$, air concentrations are used as the exposure/dose metric in both the epidemiological studies and the other types of health evidence. Thus, there is no comparable aspect in the PM or $NO_2$ evidence base. The strong evidence describing the role of COHb in CO toxicity is important to consider in interpreting the CO epidemiological studies and contributes to the biological plausibility of the ischemia-related health outcomes that have been associated with ambient CO concentrations. Yet, we do not have information on the COHb levels of epidemiological study subjects that we can evaluate in the context of the COHb levels eliciting health effects in the controlled human exposure studies. Further, we lack additional information on the CO exposures of the epidemiological study subjects to both ambient and nonambient sources of CO that might be used to estimate their COHb levels and bridge the gap between the two study types.

Additionally the ISA recognizes that the changes in COHb that would likely be associated with exposure to the low ambient CO concentrations assessed in some of the epidemiological studies would be smaller than changes associated with "substantially reduced {oxygen} delivery to tissues," that might plausibly lead to the outcomes observed in those studies, with additional investigation needed to determine whether there may be another mechanism of action for CO that contributes to the observed outcomes at low ambient concentrations (ISA, p. 5–48). Thus, there are uncertainties associated with the epidemiological evidence that "complicate the quantitative interpretation of the epidemiologic findings, particularly regarding the biological plausibility of health effects occurring at COHb levels resulting from exposures to the ambient CO concentrations" assessed in these studies (ISA, p. 2–17).

In summary, the Policy Assessment concludes that some important uncertainties from the last review have been reduced, including those associated with concerns for ambient levels of CO to pose neurobehavioral risks as current concentrations of ambient CO are well below those that might be expected to result in COHb levels as high as those associated with these effects. Additionally, our exposure and dose models have improved giving us increased confidence in their estimates. A variety of uncertainties still remain including the adverse nature and significance of the small changes in time to ST-segment depression identified at the lowest COHb levels investigated, and the magnitude of associated risk of specific health outcomes, as well as the potential for as-yet-unidentified health effects at COHb levels below 2%. Additionally, although the evidence base is somewhat expanded with regard to the potential for CO effects on the developing fetus, uncertainties remain in our understanding of the potential influence of low, ambient CO exposures on conditions existing in the fetus and newborn infant and on maternal-fetal relationships. We additionally recognize that the expanded body of epidemiological evidence includes its own set of uncertainties which complicates its interpretation, particularly with regard to ambient concentrations that may be eliciting health outcomes.

b. Exposure/Dose-Based Considerations

In considering the evidence from controlled human exposure studies to address the question regarding ambient CO concentrations associated with health effects, we have developed estimates of COHb associated with different air quality conditions using quantitative exposure and dose modeling, as was done at the time of the last review. The current estimates are presented in the REA and discussed with regard to policy-relevant considerations in this review in the Policy Assessment (PA, section 2.2.2). Since the last review, there have been numerous improvements to the exposure and COHb models that we use to estimate exposure and dose for the current review. The results of modeling using these improved tools in the current review and associated conclusions in the Policy Assessment are described below with regard to the expectation for COHb levels of concern to occur in the at-risk population under air quality conditions associated with the current CO standards.

In considering the results from the REA, the Policy Assessment considered several questions including those concerning the magnitude of COHb levels estimated in the simulated at-risk populations in response to ambient CO exposure, as well as the extent to which such estimates may be judged to be important from a public health perspective.

In addressing the questions concerning the magnitude of at-risk population COHb levels estimated to

[51] In the case of lead (Pb), in contrast to that of CO, the epidemiological evidence is focused on associations of Pb-related health effects with measurements of Pb in blood, providing a direct linkage between the pollutant, via the internal biomarker of dose, and the health effects. Thus, for Pb, as compared to the case for CO, we have less uncertainty in our interpretations of the epidemiological studies with regard to the pollutant responsible for the health effects observed.

occur in areas simulated to just meet the current, controlling, 8-hour standard and what portion of the at-risk population is estimated to experience maximum COHb levels above levels of potential health concern, the Policy Assessment first noted the context for the population COHb estimates provided by the REA simulations of exposure to ambient CO (REA, section 6.2). As in the last review, the Policy Assessment recognized that indoor sources of CO can be important determinants of population exposures to CO and to population distributions of daily maximum COHb levels, and that for some portions of the population, these sources may dominate CO exposures and related maximum COHb levels. The Policy Assessment additionally took note of the conclusions drawn in the previous review that the contribution of indoor sources to individual exposures and associated COHb levels cannot be effectively mitigated by ambient air quality standards (*e.g.,* 59 FR 38914) and so focused on COHb levels resulting from ambient CO exposures. In so doing, however, the Policy Assessment also recognized as noted in section II.C above, that simulations focused solely on exposures associated with ambient CO may overestimate the response of COHb levels to short-duration ambient exposures (the ambient contribution) as pre-exposure baseline COHb levels will necessarily not reflect the contribution of both nonambient and ambient sources. Additionally, these simulations may underestimate COHb levels that would occur in situations with appreciable nonambient exposure.

As recognized in the Policy Assessment and described in detail in the REA, estimates for exposure concentrations indicated that highest ambient CO exposures occurred in in-vehicle microenvironments, with next highest exposures in microenvironments where running vehicles congregate such as parking areas and fueling stations, (REA, section 6.1).

In considering the REA estimates for current or "as is" air quality conditions and conditions simulated to just meet the current 8-hour standard, the Policy Assessment particularly focused on the extent to which the current standards provide protection to the simulated at-risk population from COHb levels of potential concern, by comparing the estimated levels in the population to the benchmarks described above. As described above, the REA presents two sets of COHb estimates: the first set of absolute estimates reflect the impact of ambient CO exposures in the absence of exposure to nonambient CO, but in the presence of endogenous CO production, while the second set are estimates of the portion of absolute COHb estimated to occur in response to the simulated ambient CO exposures, *i.e.,* after subtraction of COHb resulting from endogenous CO production (REA, sections 4.4.7 and 5.10.3). In describing the REA results, the Policy Assessment draws from exposure and dose estimates for both the HD and CHD populations (REA, section 6.2), recognizing that, in terms of percentages of persons exposed and experiencing daily maximum end-of-hour COHb at or above specific levels, the results are similar for the two simulated at-risk populations (HD and CHD). We note that, in terms of absolute numbers of persons, the results differ due to differences in the size of the two populations.

The Policy Assessment first considered the absolute COHb results with regard to the percentage of simulated populations experiencing at least one day with an end-of hour COHb level above selected benchmarks (Table 1 includes these results for the HD populations). Another dimension of the analysis, presented in Table 2 (for the CHD populations),[52] is the percentage of simulated populations experiencing multiple days in the simulated year with an end-of-hour COHb level above the same benchmarks. These two dimensions of the dose estimates are combined in the metric, person-days, which is presented in Tables 6–15, 6–16, 6–18 and 6–19 of the REA. The metric, person-days, was the focus of exposure/dose considerations in the last review for which a previous version of the exposure/dose model was used (59 FR 38914; USEPA, 1992).[53] The person-days metric, which summarizes occurrences across the number of persons in the at-risk population multiplied by the number of days in the year, is a common cumulative measure of population exposure/dose that simultaneously takes into account both the number of people affected and the numbers of times each is affected.

As expected, given that current ambient concentrations in the two study areas are well below the CO standards, the absolute COHb estimates under current air quality conditions are appreciably lower than the corresponding estimates for conditions of higher ambient CO concentrations in which the current 8-hour standard is just met (Table 1). Under "as is" (2006) conditions in the two study areas, no person in the simulated at-risk populations is estimated to experience any days in the year with end-of-hour COHb concentrations at or above 3% COHb, and less than 0.1% of the simulated at-risk populations are estimated to experience at least one end-of-hour COHb concentration at or above 2% (Table 1).

Under conditions with higher ambient CO concentrations simulated to just meet the current 8-hour standard, the portion of the simulated at-risk populations estimated to experience daily maximum end-of-hour COHb levels at or above benchmarks is greater in both study areas, with somewhat higher percentages for the Denver study area population (Table 1). In both study areas, nonetheless, less than 1% of the simulated at-risk populations is estimated to experience a single day with a maximum end-of hour COHb level at or above 3% (Table 1) and no person is estimated to experience more than one such day in a year (Table 2). Further, less than 0.1% of either simulated population in either study area is estimated to experience a single day with maximum end-of-hour COHb at or above 4%. A difference between the study areas is more evident for lower benchmarks, with less than 5% of the simulated at-risk population in the Denver study area and less than 1% of the corresponding population in the Los Angeles study area estimated to experience any days with a maximum end-of-hour COHb level at or above 2% (Table 1). Appreciably smaller percentages of the simulated at-risk population were estimated to experience more than one day with such levels (Table 2). For example, less than 1.5% of the population is estimated to experience more than one day in a year with a maximum COHb level at or above 2.0%, and less than 0.1% are estimated to experience six or more such days in a year. Additionally, consistent with the findings of the assessment performed for the review completed in 1994, less than 0.1% of person-days for the simulated at-risk populations were estimated to have end-of-hour COHb levels at or above 2% COHb (REA, Tables 6–18 and 6–19).

[52] As described in the REA, the analyses providing results for Table 2 were only performed for the CHD populations, and so are not available for the larger HD population, although as mentioned above the results in terms of percentage are expected to be similar.

[53] As described in section II.C. above, pNEM, the model used in the last review, employed a cohort-based approach from which person-days were the exposure and dose metrics (USEPA, 1992; Johnson *et al.,* 1992).

TABLE 1—PORTION OF SIMULATED HD POPULATIONS WITH AT LEAST ONE DAILY MAXIMUM END-OF-HOUR COHb LEVEL (ABSOLUTE) AT OR ABOVE INDICATED LEVELS UNDER AIR QUALITY CONDITIONS SIMULATED TO JUST MEET THE CURRENT STANDARD AND "AS IS" CONDITIONS

| Daily maximum end-of-hour COHb (absolute) | Percentage (%) of simulated HD population [A] | | | |
|---|---|---|---|---|
| | Just meeting current 8-hour standard (8-hr DV = 9.4 ppm) | | "As is" (2006) conditions | |
| | Los Angeles (1-hr DV = 11.8 ppm) | Denver (1-hr DV = 16.2 ppm) | Los Angeles (8-hr DV = 5.6 ppm) (1-hr DV = 8.2 ppm) | Denver (8-hr DV = 3.1 ppm) (1-hr DV = 4.6 ppm) |
| ≥ 4.0% | 0 | [B] < 0.1 | 0 | 0 |
| ≥ 3.0% | [B] < 0.1 | 0.3 | | |
| ≥ 2.5% | [B] < 0.1 | 0.9 | | |
| ≥ 2.0% | 0.6 | 4.5 | [B] < 0.1 | [B] < 0.1 |
| ≥ 1.5% | 5.0 | 24.5 | 1.6 | 1.2 |

[A] Drawn from Tables 6–15 through 6–19 of the REA.
[B] <0.1 is used to represent nonzero estimates below 0.1%.
Abbreviations: hr = hour, DV = Design Value.

TABLE 2—PORTION OF SIMULATED CHD POPULATION WITH MULTIPLE DAYS OF MAXIMUM END-OF-HOUR COHb LEVELS (ABSOLUTE) AT OR ABOVE THE INDICATED LEVELS UNDER AIR QUALITY CONDITIONS SIMULATED TO JUST MEET THE CURRENT STANDARD AND "AS IS" CONDITIONS

| Maximum end-of-hour COHb level (absolute) | Percentage (%) of simulated CHD population [A] | | | | | | | | | | | |
|---|---|---|---|---|---|---|---|---|---|---|---|---|
| | Just meeting current 8-hour standard (8-hr DV = 9.4 ppm) | | | | | | "As is" (2006) conditions | | | | | |
| | Los Angeles (1-hr DV = 11.8 ppm) | | | Denver (1-hr DV = 16.2 ppm) | | | Los Angeles (8-hr DV = 5.6 ppm) (1-hr DV = 8.2 ppm) | | | Denver (8-hr DV = 3.1 ppm) (1-hr DV = 4.6 ppm) | | |
| | ≥ 2 days | ≥ 4 days | ≥ 6 days | ≥ 2 days | ≥ 4 days | ≥ 6 days | ≥ 2 days | ≥ 4 days | ≥ 6 days | ≥ 2 days | ≥ 4 days | ≥ 6 days |
| ≥ 3.0% | 0 | 0 | 0 | 0 | 0 | 0 | 0 | 0 | 0 | 0 | 0 | 0 |
| ≥ 2.5% | [B] < 0.1 | 0 | 0 | [B] < 0.1 | 0 | 0 | 0 | 0 | 0 | 0 | 0 | 0 |
| ≥ 2.0% | 0.2 | [B] < 0.1 | [B] < 0.1 | 1.4 | 0.2 | [B] < 0.1 | 0 | 0 | 0 | [B] < 0.1 | [B] < 0.1 | [B] < 0.1 |
| ≥ 1.5% | 2.2 | 0.7 | 0.5 | 11.2 | 5.0 | 3.3 | 0.5 | 0.2 | 0.1 | 0.7 | 0.5 | 0.4 |

[A] These estimates are drawn mainly from Figures 6–5 and 6–6 of the REA and represent the percentage of persons experiencing greater than or equal to 2, 4, or 6 days with a maximum end-of-hour COHb (absolute) at or above the selected level.
[B] <0.1 is used to represent nonzero estimates below 0.1%.

As described above, the REA also presented estimates of the portion of the absolute COHb levels occurring in response to the simulated ambient CO exposures (*i.e.,* that not derived from endogenous CO production). The REA refers to these estimates as the ambient CO contribution to (absolute) COHb. As observed with the absolute COHb estimates under conditions just meeting the standard, the results for the Denver study area included larger percentages of the population above specific COHb ambient contribution levels than those for the Los Angeles study area, reflecting the study area difference in 1-hour peak concentrations. Although estimates of population percentages for multiple occurrences are not available for the ambient contribution estimates, it is expected that similar to those for absolute COHb, they would be appreciably lower than those shown here for at least one occurrence. Additionally, as mentioned above, somewhat lower ambient contribution estimates might be expected if other (nonambient) CO sources were present in the simulations.

In considering the estimates of population occurrences of daily maximum COHb levels for REA simulations under conditions just meeting the current 8-hour standard (presented in Tables 1 and 2 above), the Policy Assessment notes that an important contributing factor to the higher percentages estimated for the Denver study area population is the occurrence of higher 1-hour peak ambient CO concentrations and consequent higher CO exposures than occur in the corresponding Los Angeles study area simulation (REA, section 6.1.2, Tables 6–7 and 6–10). The difference in the peak 1-hour ambient concentrations is illustrated by the higher 1-hour design value for Denver as compared to Los Angeles (16.2 ppm versus 11.8 ppm), as noted in Tables 1 and 2. This difference, particularly at the upper percentiles of the air quality distribution, is likely driving the higher population percentages estimated to experience higher 1-hour and 8-hour exposures in the Denver study area as compared to Los Angeles (REA, Tables 6–7 and 6–10).[54] The situation is largely reversed under "as is" conditions, where the Los Angeles study area has generally higher 1-hour and 8-hour ambient CO concentrations as illustrated by the design values for *as is* conditions in Tables 1 and 2 above (as well as Tables 3–1 to 3–6, 5–14 and 5–16 of the REA), and Los Angeles also has higher percentages of people estimated to be exposed to the higher exposure concentrations (REA, Tables 6–1 and 6–4). Thus, the Policy Assessment recognizes the impact on daily maximum COHb levels of 1-hour

[54] Other factors that contribute less to differences in COHb estimates between the two study areas include altitude, which slightly enhances endogenous CO and COHb formation and can enhance COHb formation induced by CO exposure under resting conditions (ISA, p. 4–19), and design aspects of the study areas with regard to spatial variation in monitor CO concentrations and population density near these monitors (REA, section 7.2.2.1).

ambient concentrations separate from the impact of 8-hour average concentrations, and takes note of this in considering the REA results with regard to the adequacy of the 1-hour standard. The Policy Assessment concludes that, taken together, the REA results indicate occurrences of COHb levels above the benchmarks considered here that are associated with 1-hour ambient concentrations that are not controlled by the current suite of standards (PA, section 2.2.2).

In considering the public health implications of the quantitative dose estimates, the Policy Assessment considered the daily maximum end-of-hour levels estimated in the REA for conditions just meeting the current suite of standards in light of the effects identified by the evidence at the COHb benchmark levels considered. For example, as a result of ambient CO exposures occurring under air quality conditions adjusted to just meet the current 8-hour standard, the REA estimates that 0.6 percent of the Los Angeles and 4.5 percent of the Denver study at-risk populations may experience an occurrence of a daily maximum end-of-hour COHb level at or above 2% COHb, the low end of the range of average COHb levels experienced by the lower controlled exposure group in the study by Allred *et al.* (1989a, 1989b, 1991), while 0.2 and 1.4 percent, respectively, of the simulated at-risk populations are estimated to experience more than one such occurrence. Additionally, less than 0.1 percent of the simulated populations in either study area are estimated to experience a COHb level similar to the higher controlled exposure group (4% COHb). As discussed in II.B.4 above, the Policy Assessment recognized the magnitude of the "time to onset" reductions observed in the study by Allred *et al.* (1989a, 1989b, 1991), the similarity of the study responses to responses considered clinically significant when evaluating medications to treat angina from coronary artery disease, and conclusions reached by the independent review panel for the study regarding the expectation that frequent encounters in "everyday life" with increased COHb levels on the order of those tested in the study might limit activity and affect quality of life (Allred *et al.,* 1989b, pp. 38, 92–94; 1991 AQCD, p. 10–35), as well as considerations in the review completed in 1994 and assessment of the study findings in the current ISA.

In considering public health implications of the REA estimates, the Policy Assessment also considered the size of the at-risk populations simulated as described in section II.B.4 above, recognizing that the U.S. population with coronary heart disease, angina pectoris (cardiac chest pain) or who have experienced a heart attack in combination with those with silent or undiagnosed ischemia comprises a large population represented by the REA analyses and for which the COHb benchmarks described above (based on studies of CAD patients) are relevant, that is, more susceptible to ambient CO exposure when compared to the general population (ISA, section 5.7). The Policy Assessment also recognized that the REA also simulated ambient CO exposures for the larger HD population, which may also be at increased risk of CO-induced health effects (ISA, section 2.6.1), while noting that within this broader group, implications of CO exposures are more significant for those persons for whom their disease state affects their ability to compensate for the hypoxia-related effects of CO (ISA, section 4.4.4).

In summary, the Policy Assessment, while noting the substantial size of the population of individuals with CHD or other heart diseases in the U.S., recognized that the REA results for conditions just meeting the current standards indicate a very small portion of this population that might be expected to experience more than one occurrence of COHb above 2%, with less than 0.1% of this population expected to experience such a level on as many as six days in a year or a single occurrence as high as 4%, and 0% of the population expected to experience more than one occurrence above 4% COHb. In light of the implications of the health evidence discussed in section II.B.4 and summarized above, the Policy Assessment concluded that the public health significance of these REA results and conclusions regarding the extent to which they are important from a public health perspective depends in part on public health policy judgments about the public health significance of effects at the COHb benchmark levels considered and judgments about the level of public health protection with an adequate margin of safety.

c. Summary

With regard to the different elements of the current standards, the Policy Assessment concludes that it is appropriate to continue to use measurements of CO in accordance with Federal reference methods as the indicator to address effects associated with exposure to ambient CO, and that it is appropriate to continue to retain standards with averaging times of 1 and 8 hours. With regard to form and level for these standards, the Policy Assessment concludes that the information available in this review supports consideration of either retaining the current suite of standards or revising one or both standards.

The Policy Assessment concludes that the extent to which the current standards are judged to be adequate depends on a variety of factors inclusive of science policy judgments and public health policy judgments. These factors include public health policy judgments concerning the appropriate COHb benchmark levels on which to place weight, as well as judgments on the public health significance of the effects that have been observed at the lowest levels evaluated, particularly with regard to relatively rare occurrences. The factors relevant to judging the adequacy of the standards also include consideration of the uncertainty associated with interpretation of the epidemiological evidence as providing information on ambient CO as distinct from information on the mixture of pollutants associated with traffic, and, given this uncertainty, the weight to place on interpretations of ambient CO concentrations for the few epidemiological studies available for air quality conditions that did not exceed the current standards. And, lastly these factors include the interpretation of, and decisions as to the weight to place on, the results of the exposure assessment for the two areas studied relative to each other and to results from past assessments, recognizing the implementation of an improved modeling approach and new input data, as well as distinctions between the REA simulations and resulting COHb estimates and the response of COHb levels to experimental CO exposure as recorded in the controlled human exposure studies.

The Policy Assessment conclusions with regard to the adequacy of the current standards are drawn from both the evidence and from the exposure and dose assessment, taking into consideration related information, limitations and uncertainties recognized above. The combined consideration of the body of evidence and the quantitative exposure and dose estimates are concluded to provide support for a suite of standards at least as protective as the current suite. Further, the Policy Assessment recognizes that conclusions regarding the adequacy of the current standards depend in part on public health policy judgments identified above and judgments about the level of public health protection with an adequate margin of safety.

The Policy Assessment additionally notes the influence that hourly ambient CO concentrations well below the current 1-hour standard may have on ambient CO exposures and resultant COHb levels under conditions just meeting the 8-hour standard, as indicated by the REA results. The REA results are concluded to indicate the potential for the current controlling 8-hour standard to allow the occurrence of 1-hour ambient concentrations that contribute to population estimates of daily maximum COHb levels, that depending on public health judgments in the areas identified above, may be considered to call into question the adequacy of the 1-hour standard and support consideration of revisions of that standard in order to reduce the likelihood of such occurrences in areas just meeting the 8-hour standard. Thus, the Policy Assessment concludes that the combined consideration of the evidence and quantitative estimates may be viewed as providing support for either retaining or revising the current suite of standards.

The Policy Assessment conclusion that it is appropriate to consider retaining the current suite of standards without revision is based on consideration of the health effects evidence in combination with the results of the REA (PA, sections 2.2.1, 2.2.2, 2.3.2 and 2.3.3) and what may be considered reasonable judgments on the public health implications of the COHb levels estimated to occur under the current standard, the public health significance of the CO effects being considered, the weight to be given to findings in the epidemiological studies in locations where the current standards are met, and advice from CASAC. Such a conclusion takes into account the long-standing body of evidence that supports our understanding of the role of COHb in eliciting effects in susceptible populations, most specifically the evidence for those with cardiovascular disease, and gives particular weight to findings of controlled exposure studies of CAD patients in which sensitive indicators of myocardial ischemia were associated with COHb levels resulting from short-duration, high-concentration CO exposures. This conclusion also takes into account uncertainties associated with the differing circumstances of ambient air CO exposures from the CO exposures in the controlled human exposure studies, as well as the unclear public health significance of the size of effects at the lowest studied exposures. As in the last review, this conclusion gives more weight to the significance of the effects observed in these studies at somewhat higher COHb levels. Additionally, this conclusion takes into account judgments in interpreting the public health implications of the REA estimates of COHb associated with ambient exposures based on the application of our current exposure modeling tools, and the size of the at-risk populations estimated to be protected from experiencing daily maximum COHb levels of potential concern by the current standard. Further, this conclusion considers the uncertainties in quantitative interpretations associated with the epidemiological studies to be too great for reliance on information from the few studies where the current standards were met as a basis for selection of alternative standards.

In addition to considering retaining the current suite of standards without revision, the Policy Assessment also concludes that it is reasonable to consider revising the 1-hour standard downward to provide protection from infrequent short-duration peak ambient concentrations that may not be adequately provided by the current standards. While the quantitative analyses for this review focused predominantly on the controlling, 8-hour standard, the analyses have indicated the influential role of elevated 1-hour concentrations in contributing to daily maximum COHb levels over benchmark levels. In addition to the REA results, the Policy Assessment notes the health effects evidence from 1-hour controlled exposures, which indicates the effects in susceptible groups from such short duration exposures. The Policy Assessment interpreted the evidence and REA estimates to indicate support for consideration of a range of 1-hour standard levels which would address the potential for the current 8-hour standard, as the controlling standard, to "average away" high short-duration exposures that may contribute to exposures of concern. Consequently, in considering alternative standard levels, the Policy Assessment focuses on the 1-hour standard as providing the most direct approach for controlling the likelihood of such occurrences.

With regard to a revision of the 1-hour standard, the Policy Assessment identified a range of 1-hour standard levels from 15 to 5 ppm as being an appropriate range for consideration. These levels are in terms of a 99th percentile daily maximum form, averaged over three years, which the Policy Assessment considers to provide increased regulatory stability over the current form. The Policy Assessment additionally takes note of CASAC's preference for a revision to the standards to provide greater protection and observes that the range of 1-hour standard levels discussed is also the range that the CASAC CO Panel suggested was appropriate for consideration.

The Policy Assessment indicates that the upper part of the range of 1-hour standard levels for consideration (11–15 ppm) was identified based on the objective of providing generally equivalent protection, nationally, to that provided by current 8-hour standard and potentially providing increased protection in some areas, such as those with relatively higher 1-hour peaks that are allowed by the current 8-hour standard. This part of the range is estimated to generally correspond to 1-hour CO levels occurring under conditions just meeting the current 8-hour standard based on current relationships between 1-hour and 8-hour average concentrations at current U.S. monitoring locations (PA, Appendix C). The Policy Assessment states that selection of a 1-hour standard within this upper part of the range would be expected to allow for a somewhat similar pattern of ambient CO concentrations as the current, controlling 8-hour standard, although with explicit and independent control against shorter-duration peak concentrations which may contribute to daily maximum COHb levels in those exposed. Consideration of 1-hour standard levels in this part of the range would take into account the factors recognized with regard to the option of retaining the current standards. But it would give greater weight to the importance of limiting 1-hour concentrations that are not controlled by the current 8-hour standard but that may contribute to exceedances of relevant COHb benchmark levels.

The Policy Assessment also concluded that, based on the evidence and REA estimates and alternative judgments regarding appropriate population targets for maximum COHb levels induced by ambient CO exposures, it may be appropriate to consider standard levels that provide additional protection than that afforded by the current standards against the occurrence of short-duration peak ambient CO exposures and associated COHb levels. With this policy objective in mind, the Policy Assessment also described a rationale for consideration of 1-hour standard levels of 9–10 ppm, which comprise the middle part of the range of 1-hour standard levels suggested for consideration (PA, section 2.3.5). Additionally, the Policy

Assessment identified 1-hour standard levels of 5–8 ppm, in the lower part of the range for consideration in light of alternative judgments with regard to the evidence and REA, including the weight to place on public health significance of smaller changes in COHb and the small number of epidemiological studies in areas meeting the current standards (PA, section 2.3.5).

In considering the relative strength of the evidence supporting each of the 3 parts of the range, the Policy Assessment concludes that the upper part of the range is most strongly supported, both with regard to judgments concerning adversity and quantitative interpretation of the epidemiological studies with regard to ambient concentrations that may elicit effects. For the lower parts of the range, the Policy Assessment concludes that support provided by the available information is more limited, especially for the lowest part of the range.

In conjunction with consideration of a revised 1-hour standard, the Policy Assessment, also concludes it is appropriate to consider retaining a standard with an 8-hour averaging time, recognizing that, as when it was established, the 8-hour standard continues to provide protection from multiple-hour ambient CO exposures which may contribute to elevated COHb levels and associated effects. In conjunction with consideration of a revised 1-hour standard, the Policy Assessment additionally describes revision to the 8-hour standard form that may be appropriate to consider to potentially provide greater regulatory stability, with adjustment to level to provide generally equivalent protection as the current 8-hour standard or as a revised 1-hour standard level (PA, section 2.3.5). The range of 8-hour levels identified in the Policy Assessment is inclusive of the range of levels included in the example policy option suggested by CASAC.

3. CASAC Advice

In our consideration of the adequacy of the current standards, in addition to the evidence- and exposure/dose-based information discussed above, we have also considered the advice and recommendations of CASAC, based on their review of the ISA, the REA, and the draft Policy Assessment, as well as comments from the public on drafts of these documents.[55] In these reviews, CASAC has provided an array of advice, both with regard to interpreting the scientific evidence and quantitative exposure/dose assessment, as well as with regard to consideration of the adequacy of the current standards (Brain and Samet, 2009, 2010a, 2010b, 2010c, 2010d).

In their review of the draft ISA, CASAC noted various limitations and uncertainties associated with the evidence, particularly from the epidemiological studies, as noted in section II.D.2.1 above. For example, they recognized limitations in representation of population exposure to ambient CO. Further they noted that "[t]he problem of co-pollutants serving as potential confounders is particularly problematic for CO" and that CO may be serving as a surrogate for a mixture of pollutants generated by fossil fuel combustion (Brain and Samet, 2010d) as well as noting uncertainty regarding the possibility for confounding effects of indoor sources of CO (Brain and Samet, 2010c).

In their comments on the draft PA, the CASAC CO Panel stated overall agreement with staff's conclusion that the body of evidence and the quantitative exposure and risk assessment provide support for retaining or revising the current 8-hour standard. They additionally, however, expressed a "preference" for a lower standard and stated that "[i]f the epidemiological evidence is given additional weight, the conclusion could be drawn that health effects are occurring at levels below the current standard, which would support the tightening of the current standard." Taking this into account, the Panel further advised that "revisions that result in lowering the standard should be considered" (Brain and Samet, 2010c).

As noted in section I.C. above, the final Policy Assessment was completed with consideration of CASAC comments on the draft document, as well as their comments on the second draft REA, and also public comments. Among the revisions made in completing the final Policy Assessment were those based on additional consideration of the epidemiological studies in light of CASAC comments. Discussion of these studies and the complications with regard to their quantitative interpretation is described in section II.D.2.a above, in addition to other evidence-based considerations described in the final Policy Assessment, and is considered in the Administrator's proposed conclusions below.

The few public comments received on this review to date that have addressed adequacy of the current standards conveyed the view that the current standards are adequate. In support of this view, these commenters disagreed with the REA estimates of in-vehicle exposure concentrations and argued that little weight should be given to the epidemiological studies.

4. Administrator's Proposed Conclusions Concerning Adequacy

Based on the large body of evidence concerning the public health impacts of exposure to ambient CO available in this review, the Administrator proposes that the current primary standards provide the requisite protection of public health with an adequate margin of safety and should be retained.

In considering the adequacy of the current standards, the Administrator has carefully considered the available evidence and conclusions contained in the Integrated Science Assessment; the information, exposure/dose assessment, rationale and conclusions presented in the Policy Assessment; the advice and recommendations from CASAC; and public comments to date. In the discussion below, the Administrator considers first the long-standing evidence base concerning effects associated with exposure to CO, including the controlled human exposure studies, and the health significance of responses observed at the 2% COHb level induced by 1-hour CO exposure, as compared to higher COHb levels. As at the time of the review completed in 1994, the Administrator also takes note of the results for the modeling of exposures to ambient CO under conditions simulated to just meet the current, controlling, 8-hour standard in two study areas, as described in the REA and Policy Assessment, and the public health significance of those results. She also considers the newly available and much-expanded epidemiological evidence, including the complexity associated with quantitative interpretation of these studies, particularly the few studies available in areas where the current standards are met. Further, the Administrator considers the advice of CASAC, including both their overall agreement with the Policy Assessment conclusion that the current evidence and quantitative exposure and dose estimates provide support for retaining the current standard, as well as their view that in light of the epidemiological studies, revisions to lower the standards should be considered and their preference for a lower standard.

[55] All written comments submitted to the Agency thus far in this review are available in the docket for this rulemaking, as are transcripts of the public meetings held in conjunction with CASAC's review of the draft PA, of drafts of the REA, and of drafts of the ISA.

As an initial matter, the Administrator takes note of the Policy Assessment's consideration of the long-standing body of evidence for CO, augmented in some aspects since the last review, as summarized in the current Integrated Science Assessment. This long-standing evidence base has established the following key aspects of CO toxicity that are relevant to this review as they were to the review completed in 1994. The common mechanism of CO health effects involves binding of CO to reduced iron in heme proteins and the alteration of their function. Hypoxia (reduced oxygen availability) induced by increased COHb blood levels plays a key role in eliciting CO-related health effects. Accordingly, COHb is commonly used as the bioindicator and dose metric for evaluating CO exposure and the potential for health effects. Further, people with cardiovascular disease are a key population at risk from short-term ambient CO exposures.

With regard to the evidence of health effects associated with ambient CO exposures relevant to this review, the Administrator first recognizes the Integrated Science Assessment's conclusion that a causal relationship is likely to exist between relevant short-term exposures to CO and cardiovascular morbidity. Further, as at the time of the review completed in 1994, the Administrator takes particular note of the evidence from controlled human exposure studies that demonstrates a reduction in time to onset of exercise-induced markers of myocardial ischemia in response to increased COHb resulting from short-term CO exposures, and recognizes the greater significance accorded both to larger reductions in time to myocardial ischemia, and to more frequent occurrences of myocardial ischemia. The Administrator also recognizes the uncertain health significance associated with the smaller responses to the lowest COHb level assessed in the study given primary consideration in this review (Allred *et al.,* 1989a, 1989b, 1991) and with single occurrences of such responses. In the study by Allred *et al.* (1989a, 1989b, 1991), a 4–5% reduction in time (approximately 30 seconds) to the onset of exercise-induced markers of myocardial ischemia was associated with the 2% COHb level induced by 1-hour CO exposure. In considering the significance of the magnitude of the time decrement to onset of myocardial ischemia observed at the 2% COHb level induced by short-term CO exposure, as well as the potential for myocardial ischemia to lead to more adverse outcomes, the EPA generally places less weight on the health significance associated with infrequent or rare occurrences of COHb levels at or just above 2% as compared to that associated with repeated occurrences and occurrences of appreciably higher COHb levels in response to short-term CO exposures. For example, at the 4% COHb level, the study by Allred *et al.,* (1989a, 1989b, 1991) observed a 7–12% reduction in time to the onset of exercise-induced markers of myocardial ischemia. The Administrator places more weight on this greater reduction in time to onset of exercise-induced markers compared to the reduction in time to onset at 2% COHb. The Administrator also notes that at the time of the 1994 review, an intermediate level of approximately 3% COHb was identified as a level at which adverse effects had been demonstrated in persons with angina. Now, as at the time of the 1994 review, the Administrator primarily considers the 2% COHb level, resulting from 1-hour CO exposure, with regard to providing a margin of safety against effects of concern that have been associated with higher COHb levels, such as 3–4% COHb.

As at the time of the last review, the Administrator additionally considers the exposure and dose modeling results, taking note of key limitations and uncertainties associated with the exposure and dose assessment summarized in section II.C.2. above, and in light of judgments above regarding the health significance of findings from the controlled human exposure studies, placing less weight on the health significance of infrequent or rare occurrences of COHb levels at or just above 2% and more weight to the significance of repeated such occurrences, as well as occurrences of higher COHb levels. Under air quality conditions just meeting the current, controlling, 8-hour standard, the assessment estimates that, as was the case for the assessment conducted for the 1994 review, daily maximum COHb levels were below 2% COHb for more than 99.9% of person-days in the study areas evaluated. Further, under these conditions, greater than 99.9% of the at-risk populations in the study areas evaluated would not be expected to experience daily maximum COHb levels at or above 4% COHb, and more than 95% and 98.6% of those populations would be expected to avoid single or multiple occurrences, respectively, at or just above 2% COHb.

The Administrator additionally takes note of the now much-expanded evidence base of epidemiological studies, including the multiple studies that observe positive associations between cardiovascular outcomes and short-term ambient CO concentrations across a range of CO concentrations, including conditions above as well as below the current NAAQS. She notes particularly the Integrated Science Assessment finding that these studies are logically coherent with the larger, long-standing health effects evidence base for CO and the conclusions drawn from it regarding cardiovascular disease-related susceptibility. In further considering the epidemiological evidence base with regard to the extent to which it provides support for conclusions regarding adequacy of the current standards, the Administrator takes note of CASAC's conclusions that "[i]f the epidemiological evidence is given additional weight, the conclusion could be drawn that health effects are occurring at levels below the current standard, which would support the tightening of the current standard" (Brain and Samet, 2010c). Additionally, the Administrator places weight on the final Policy Assessment consideration of aspects that complicate quantitative interpretation of the epidemiological studies with regard to ambient concentrations that might be eliciting the reported health outcomes.

For purposes of evaluating the adequacy of the current standards, there are multiple complicating features of the epidemiological evidence base, as described in more detail in the final Policy Assessment and in section II.D.2.a, above. First, while a number of studies observed positive associations of cardiovascular disease-related outcomes with short-term CO concentrations, very few of these studies were conducted in areas that met the current standards throughout the period of study. In addition, CASAC, in their advice regarding interpretation of the currently available evidence commented that "[t]he problem of co-pollutants serving as potential confounders is particularly problematic for CO" and that given the currently low ambient CO levels, there is a possibility that CO is acting as a surrogate for a mix of pollutants generated by fossil fuel combustion. CASAC further stated that "[a] better understanding of the possible role of co-pollutants is relevant to regulation" (Brain and Samet, 2010d). As described in the Policy Assessment, there are also uncertainties related to representation of ambient CO exposures given the steep concentration gradient near roadways, as well as the prevalence of measurements below the method detection limit across the database. CASAC additionally indicated the need to consider the potential for

confounding effects of indoor sources of CO. As discussed in section II.D.2.a above, the interpretation of epidemiological studies for CO is further complicated because, in contrast to the situation for all other criteria pollutants, the epidemiological studies for CO use an exposure/dose metric (air concentration) that differs from the metric commonly used in the other key CO health studies (COHb).

Although CASAC expressed a preference for a lower standard, CASAC also indicated that the current evidence provides support for retaining the current suite of standards. CASAC's recommendations appear to recognize that their preference for a lower standard was contingent on a judgment as to the weight to be placed on the epidemiological evidence. For the reasons explained above, after full consideration of CASAC's advice and the epidemiological evidence, as well as its associated uncertainties and limitations, the Administrator judges those uncertainties and limitations to be too great for the epidemiological evidence to provide a basis for revising the current standards.

In considering the adequacy of the level of protection provided by the current standards, the Administrator notes the findings of the exposure and dose assessment in light of considerations discussed above regarding the weight given to different COHb levels and their frequency of occurrence. The exposure and dose assessment results indicate that only a very small percentage of the at-risk population is estimated to experience a single occurrence in a year of daily maximum COHb at or above 3.0% COHb under conditions just meeting the current 8-hour standard in the two study areas evaluated, and no multiple occurrences are estimated. The Administrator also notes the results indicating that only a small percentage of the at-risk populations are estimated to experience a single occurrence of 2% COHb in a year under conditions just meeting the standard, and still fewer estimated to experience multiple such occurrences. Taken together, the Administrator considers the current standard to provide a very high degree of protection for the COHb levels and associated health effects of concern, as indicated by the extremely low estimates of occurrences, and provides slightly less but a still high degree of protection for the effects associated with lower COHb levels, the physiological significance of which is less clear. Additionally, the Administrator proposes to conclude that consideration of the epidemiological studies does not lead her to identify a need for any greater protection. Thus, the Administrator proposes to conclude that the current suite of standards provides an adequate margin of safety against adverse effects associated with short-term ambient CO exposures. For these and all of the reasons discussed above, and recognizing the CASAC conclusion that, overall, the current evidence and REA results provide support for retaining the current standard, the Administrator proposes to conclude that the current suite of primary CO standards are requisite to protect public health with an adequate margin of safety from effects of ambient CO.

The Administrator also solicits comment on whether it would be appropriate to revise the current primary standards. The Administrator takes note that, while CASAC indicated their view that the evidence and exposure and dose estimates provide support for retaining the current NAAQS, they also indicated their preference for a lower standard. For example, the CASAC CO Panel stated that giving additional weight to the epidemiological evidence would support a tightening of the current standard. The Administrator also takes note of the Policy Assessment conclusions, summarized in section II.D.2.c above. Thus, in light of views expressed by CASAC, as well as the Policy Assessment conclusions, the Administrator additionally solicits comment on the appropriateness of potential revisions to the form and level of the standards. Any comments on such revisions should include an explanation of the basis for the commenters' views.

### *E. Summary of Proposed Decisions on Primary Standards*

For the reasons discussed above, and taking into account information and assessments presented in the Integrated Science Assessment and Policy Assessment, the advice and recommendations of CASAC, and the public comments to date, the Administrator proposes to retain the existing suite of primary CO standards. Additionally, the Administrator solicits comment on the appropriateness of revisions to the form and level of the standards.

## III. Consideration of a Secondary Standard

This section focuses on the key policy-relevant issues related to the review of public welfare-related effects of CO. Under section 109(b) of the Clean Air Act, a secondary standard is to be established at a level "requisite to protect the public welfare from any known or anticipated adverse effects associated with the presence of the pollutant in ambient air." Section 302(h) of the Act defines effects on welfare in part as "effects on soils, water, crops, vegetation, man-made materials, animals, weather, visibility, and climate." We first summarize the history of EPA's consideration of secondary standards for CO in section III.A. In section III.B, we then discuss the evidence currently available for welfare effects to inform decisions in this review as to whether, and if so how, to establish secondary standards for CO based on public welfare considerations as presented in the Policy Assessment. Advice from CASAC is summarized in section III.C. Lastly, the Administrator's proposed conclusions are presented in section III.D.

### *A. Background and Considerations in Previous Reviews*

With the establishment of the first NAAQS for CO in 1971, secondary standards were set identical to the primary standards. CO was not shown to produce detrimental effects on certain higher plants at levels below 100 ppm. The only significant welfare effect identified for CO levels possibly approaching those in ambient air was inhibition of nitrogen fixation by microorganisms in the root nodules of legumes associated with CO levels of 100 ppm for one month (U.S. DHEW, 1970). In the first review of the CO NAAQS, which was completed in 1985, the threshold level for plant effects was recognized to occur well above ambient CO levels, such that vegetation damage as a result of CO in ambient air was concluded to be very unlikely (50 FR 37494). As a result, EPA concluded that the evidence did not support maintaining a secondary standard for CO, as welfare-related effects had not been documented to occur at ambient concentrations (50 FR 37494). Based on that conclusion, EPA revoked the secondary standard. In the most recent review of CO, which was completed in 1994, EPA again concluded there was insufficient evidence of welfare effects occurring at or near ambient levels to support setting a secondary NAAQS (59 FR 38906). That review did not consider climate-related effects.

### *B. Evidence-Based Considerations in the Policy Assessment*

To evaluate whether establishment of a secondary standard for CO is appropriate, we adopted an approach in this review that builds upon the general approach used in the last review and reflects the broader body of evidence

and information now available. Considerations of the evidence available in this review in the Policy Assessment were organized around the following overarching question: Does the currently available scientific information provide support for considering the establishment of a secondary standard for CO?

In considering this overarching question, the Policy Assessment first noted that the extensive literature search performed for the current review did not identify any evidence of ecological effects of CO unrelated to climate-related effects, at or near ambient levels (ISA, section 1.3 and p. 1–3). However, ambient CO has been associated with welfare effects related to climate (ISA, section 3.3). Climate-related effects of CO were considered for the first time in the 2000 AQCD. The greater focus on climate in the current ISA relative to the 2000 AQCD reflects comments from CASAC and increased attention to the role of CO in climate forcing (Brain and Samet, 2009; ISA, section 3.3). Based on the current evidence, the ISA concludes that "a causal relationship exists between current atmospheric concentrations of CO and effects on climate" (ISA, section 2.2). Accordingly, the following discussion focuses on climate-related effects of CO in addressing the question posed above.

As concluded in the Policy Assessment, recently available information does not alter the current well-established understanding of the role of urban and regional CO in continental and global-scale chemistry, as outlined in the 2000 AQCD (PA, section 3.2). As recognized in the ISA, CO is a weak direct contributor to greenhouse warming. The most significant effects on climate result indirectly from CO chemistry, related to the role of CO as the major atmospheric sink for hydroxyl radicals. Increased concentrations of CO can lead to increased concentrations of other gases whose loss processes also involve hydroxyl radical chemistry. Some of these gases, such as methane and ozone ($O_3$), contribute to the greenhouse effect directly while others deplete stratospheric $O_3$ (ISA, section 3.3 and p. 3–11).

Advances in modeling and measurement have improved our understanding of the relative contribution of CO to climate forcing (PA, section 3.2). CO contributes to climate forcing through both direct radiative forcing (RF) of CO, estimated at 0.024 watts per square meter ($W/m^2$) by Sinha and Toumi (1996), and indirect effects of CO on climate through methane, $O_3$ and carbon dioxide (Forster *et al.* 2007). The Intergovernmental Panel on Climate Change estimated the combined RF for these indirect effects of CO to be ~0.2 $W/m^2$ over the period 1750–2005 (Forster *et al.,* 2007), with more than one-half of the forcing attributed to $O_3$ formation (ISA, section 3.3 and p. 3–13).

As discussed in the Policy Assessment, CO is classified as a short-lived climate forcing agent, prompting CO emission reductions to be considered as a possible strategy to mitigate effects of global warming (PA, section 3.2). However, in considering the information presented in the ISA, the Policy Assessment notes that it is highly problematic to evaluate the indirect effects of CO on climate due to the spatial and temporal variation in emissions and concentrations of CO and due to the localized chemical interdependencies involving CO, methane, and $O_3$ (ISA section 3.3 and p. 3–12). Most climate model simulations are based on global-scale scenarios and have a high degree of uncertainty associated with short-lived climate forcers such as CO (ISA, section 3.3 and p. 3–16). These models may fail to consider the local variations in climate forcing due to emissions sources and local meteorological patterns (ISA, section 3.3 and p. 3–16). It is possible to compute individual contributions to RF of CO from separate emissions sectors, although uncertainty in these estimates has not been quantified (ISA, section 3.3, p. 3–13 and Figure 3–7).

Uncertainties in the estimates of the indirect RF from CO are noted in the Policy Assessment to be related to uncertainties in the chemical interdependencies of CO and trace gases, as described above. Large regional variations in CO concentrations also contribute to the uncertainties in the RF from CO and other trace gases (ISA section 3.3 and p. 3–12). Although measurement of and techniques for assessing climate forcing are improving, estimates of RF still have approximately 50% uncertainty (ISA, section 3.3, and p. 3–13).

In summary, the Policy Assessment drew the following conclusions based on the considerations identified above. As an initial matter, with respect to non-climate welfare effects, including ecological effects and impacts to vegetation, the Policy Assessment concluded that there is no currently available scientific information that supports a CO secondary standard (PA, section 3.4). Secondly, with respect to climate-related effects, the Policy Assessment recognized the evidence of climate forcing effects associated with CO (ISA, sections 2.2 and 3.3), while also noting that the available information provides no basis for estimating how localized changes in the temporal and spatial patterns of ambient CO likely to occur across the U.S. with (or without) a secondary standard would affect local, regional, or nationwide changes in climate. Moreover, more than half of the indirect forcing effect of CO is attributable to $O_3$ formation, and welfare-related effects of $O_3$ are more appropriately considered in the context of the review of the $O_3$ NAAQS, rather than in this CO NAAQS review (PA, section 3.4). For these reasons, the Policy Assessment concluded that there is insufficient information at this time to support the consideration of a secondary standard based on CO effects on climate processes (PA, section 3.4).

### *C. CASAC Advice*

In consideration of a secondary standard, in addition to the evidence discussed above, EPA has also considered the advice and recommendations of CASAC, based on their review of the ISA, and the draft Policy Assessment.[56]

In their comments on the draft Policy Assessment, CASAC took note of the substantial evidence that CO has adverse effects on climate and recommended that staff summarize information that is currently lacking and would assist in consideration of a secondary standard in the future (ISA, sections 3.2 and 3.3; Brain and Samet, 2010c).[57] CASAC noted without objection or disagreement the staff's conclusions that there is insufficient information to support consideration of a secondary standard at this time (Brain and Samet, 2010c).

### *D. Administrator's Proposed Conclusions Concerning a Secondary Standard*

The proposed conclusions presented here are based on the assessment and integrative synthesis of the scientific evidence presented in the ISA, building on the evidence described in the 2000 AQCD, as well as staff consideration of this evidence in the Policy Assessment and CASAC advice. In considering whether the currently available scientific information supports setting a secondary standard for CO, EPA takes note of the Policy Assessment consideration of the body of available evidence (briefly summarized above in

[56] Thus far in this review, no public comments have been received regarding the secondary standard.

[57] This recommendation is addressed in section 3.5 of the Policy Assessment.

section III.B). First, EPA concludes that the currently available scientific information with respect to non-climate welfare effects, including ecological effects and impacts to vegetation, does not support a CO secondary standard. Secondly, with respect to climate-related effects, the EPA takes note of staff considerations in the Policy Assessment and concurs with staff conclusions that this information is insufficient at this time to provide support for a CO secondary standard. Thus, in considering the evidence, staff considerations in the Policy Assessment summarized here, as well as the views of CASAC, summarized above, the Administrator proposes to conclude that no secondary standards should be set at this time because, as in the past reviews, having no standard is requisite to protect public welfare from any known or anticipated adverse effects from ambient CO exposures.

## IV. Proposed Amendments to Ambient Monitoring Requirements

The EPA is proposing changes to the ambient air monitoring network design requirements to support the NAAQS for CO discussed above in section II. Because the availability of ambient CO monitoring data is an essential element of the NAAQS implementation framework, EPA is proposing to revise the requirements for the ambient CO monitoring network to include a minimum set of monitors to provide data for comparison to the NAAQS (*i.e.,* for determining whether areas are attaining the standards) in locations near roads where CO emissions associated with mobile source related activity lead to increased ambient concentrations. Under such requirements, State, local, and Tribal monitoring agencies ("monitoring agencies") collect ambient CO monitoring data in accordance with the monitoring requirements contained in 40 CFR parts 50, 53, and 58 for comparison to the NAAQS and to meet other objectives.

### *A. Monitoring Methods*

Ambient air monitoring data are used for various purposes, including determining compliance with the NAAQS. The use of reference methods provides uniform, reproducible measurements of pollutant concentrations in ambient air. Equivalent methods allow for the introduction of new or alternative technologies for the same purpose, provided these methods produce measurements directly comparable to the reference methods. EPA has established procedures for determining and designating reference and equivalent methods, known as Federal Reference Methods (FRMs) and Federal Equivalent Methods (FEMs), at 40 CFR part 53.

Ambient air monitoring data for CO must be obtained using an FRM or an FEM, as defined in 40 CFR parts 50 and 53, for such data to be comparable to the NAAQS for CO. All CO monitoring methods in use currently by State and local monitoring agencies are EPA-designated FRM analyzers (USEPA, 2010f). No FEM analyzer, *i.e.* one using an alternative measurement principle, has yet been designated by EPA for CO. These continuous FRM analyzers have been used in monitoring networks for many years (USEPA, 2010f) and provide CO monitoring data adequate for determining CO NAAQS compliance. The current list of all approved FRMs capable of providing ambient CO data for this purpose may be found on the EPA Web site, *http://www.epa.gov/ttn/amtic/files/ambient/criteria/reference-equivalent-methods-list.pdf.* Although both the existing CO FRM in 40 CFR part 50 and the FRM and FEM designation requirements in part 53 remain adequate to support the CO NAAQS, EPA is nevertheless proposing editorial revisions to the CO FRM and both technical and editorial revisions to part 53, as discussed below.

#### 1. Proposed Changes to Part 50, Appendix C

Reference methods for criteria pollutants are described in several appendices to 40 CFR part 50; the CO FRM is set forth in appendix C of part 50. A nondispersive infrared photometry (NDIR) measurement principle is formally prescribed as the basis for the CO FRM. Appendix C describes the technical nature of the NDIR measurement principle stipulated for FRM CO analyzers as well as two acceptable calibration procedures for CO FRM analyzers. It further requires that an FRM analyzer must meet specific performance, performance testing, and other requirements set forth in 40 CFR part 53.

From time to time, as pollutant measurement technology advances, EPA assesses the FRMs in the 40 CFR part 50 FRM appendices to determine if they are still adequate or if improved or more suitable measurement technology has become available to better meet current FRM needs as well as potential future FRM requirements. The CO FRM was originally promulgated on April 30, 1971 (36 FR 8186), in conjunction with EPA's establishment (originally as 42 CFR part 410) of the first NAAQS for six pollutants (including CO) as now set forth in 40 CFR part 50. The method was amended in 1982 and 1983 (47 FR 54922; 48 FR 17355) to incorporate minor updates, but no substantive changes in the fundamental NDIR measurement technique have been made since its original promulgation. (Those updates included clarification that the FRM NDIR measurement principle encompassed the specific "gas filter correlation" measurement technique now used by many commercial FRM analyzers.).

In connection with the current review of the NAAQS for CO, EPA is proposing to again update the existing CO FRM—with no substantive changes—as explained in further detail below. This action is based on the scientific view that the CO FRM, as originally established and updated in the 1980's, is still fully adequate for FRM purposes and is fulfilling that role well. Further, the FRM is also well suited for use in routine CO monitoring, and several high quality FRM analyzer models have been available for many years and continue to be offered and supported by multiple analyzer manufacturers. Finally, EPA has determined that no new ambient CO measurement technique has become available that is superior to the NDIR technique specified for the current FRM.

While EPA believes that the current CO FRM is adequate, we also believe that the existing CO FRM should be improved by implementing updates to clarify the language of some provisions, to make the format match more closely the format of more recently promulgated automated FRMs, and to better reflect the design and improved performance of current, commercially available CO FRM analyzers. EPA found that no substantive changes were needed to the basic NDIR FRM measurement principle; therefore, the proposed updates are of a very minor, editorial nature. However, these proposed changes are numerous enough so that EPA is proposing to re-promulgate the entire CO FRM in appendix C of 40 CFR part 50, replacing the existing FRM language with revised language.

#### 2. Proposed Changes to Part 53

In close association with the proposed editorial revision to the CO FRM described above, EPA is also proposing to update the performance requirements for FRM CO analyzers currently contained in 40 CFR part 53. These requirements were established in the 1970's, based primarily on the NDIR CO measurement technology available at that time. While the fundamental NDIR measurement principle, as implemented in commercial FRM analyzers, has changed little over several decades,

FRM analyzer performance has improved markedly. Contemporary advances in digital electronics, sensor technology, and manufacturing capabilities have permitted today's NDIR analyzers to exhibit substantially improved measurement performance, reliability, and operational convenience at modest cost. This improved instrument performance is not reflected in the current performance requirements for CO FRM analyzers specified in 40 CFR part 53, indicating a need for an update to reflect that improved performance. The updated part 53 performance requirements would also apply to candidate FEM CO analyzers, if any new, alternative CO measurement technology should be developed.

As noted previously, the performance of FRM analyzers designated under the presently specified performance requirements of Part 53 is fully adequate for current monitoring needs. A review of analyzer manufacturers' specifications has determined that all existing CO analyzer models currently in use in the monitoring network already meet the proposed new requirements (for the standard measurement range). Upgrading the analyzer performance requirements to be more consistent with the typical performance capability available in contemporary FRM analyzers would ensure that newly designated FRM analyzers will have this improved measurement performance. Therefore, EPA believes that the Part 53 requirements should be updated to be at least commensurate with this typical level of CO analyzer performance. In addition, this modernization also provides for optional, new performance requirements applicable to lower, more sensitive measurement ranges that would support improved monitoring data quality in areas of low CO concentrations. Accordingly, EPA is proposing to amend the performance requirements applicable to CO FRMs (and any new FEMs) set forth in subpart B of 40 CFR part 53, as described in the following discussion.

Subpart B of 40 CFR part 53 prescribes explicit test procedures to be used for testing specified performance aspects of candidate FRM and FEM analyzers, along with the minimum performance requirements that such analyzers must meet to qualify for FRM or FEM designation. These performance requirements are specified in Table B–1 of subpart B. Although Table B–1 covers candidate methods for $SO_2$, $O_3$, CO, and $NO_2$, the updates to Table B–1 that EPA is now proposing would be applicable only to candidate methods for CO.

Some updated performance requirements are being proposed for candidate CO analyzers that operate on the specified "standard" measurement range (0 to 50 ppm). This measurement range would remain unchanged from the existing requirements as it appropriately addresses the monitoring data needed for assessing attainment. However, based on EPA's review of the performance of currently available CO FRM analyzers (USEPA, 2010g), EPA is proposing revised performance requirements for CO analyzers in Table B–1, as follows. The measurement noise limit would be reduced from 0.5 to 0.2 ppm, and the lower detectable limit would be reduced from 1 to 0.4 ppm. Zero drift would be reduced from 1.0 to 0.5 ppm, and span drift would be lowered from 2.5% to 2.0%. The existing mid-span drift requirement, tested at 20% of the upper range limit (URL), would be withdrawn. EPA has found that the mid-span drift requirement is unnecessary for CO instruments because the upper level span drift (tested at 80% of the URL) completely and much more accurately defines analyzer span drift performance.

EPA proposes to change the lag time allowed from 10 to 2 minutes, and the rise and fall times from 5 to 2 minutes. For precision, EPA proposes to change the form of the precision limit specifications from an absolute measure (ppm) to percent (of the URL) for CO analyzers and to set the limit at 1 percent for both 20% and 80% of the URL. One percent is equivalent to the existing limit value of 0.5 ppm for precision for the standard (50 ppm) measurement range. This change in units from ppm to percent will make the requirement responsive to higher and lower measurement ranges (*i.e.,* more demanding for lower ranges).

The interference equivalent limit of 1 ppm for each interferent would not be changed, but EPA proposes to withdraw the existing limit requirement for the total of all interferents. EPA has found that the total interferent limit is redundant with the individual interferent limit for modern CO analyzers.

These proposed new performance requirements would apply only to newly designated CO FRM or FEM analyzers. Essentially all existing FRM analyzers in use today, as noted previously, are providing CO monitoring data of adequate quality and fulfill the proposed requirements. Thus, existing FRM analyzers would not be required to be re-tested and re-designated under the proposed new requirements. All currently designated FRM analyzers would retain their original FRM designations.

EPA recognizes that some CO monitoring objectives (*e.g.,* area-wide monitoring away from major roads and rural area surveillance) require analyzers with lower, more sensitive measurement ranges than the standard range used for typical ambient monitoring. Part 53 (40 CFR 53.20(b)) allows an FRM or FEM designation to include lower ranges. To make such lower-range measurements more meaningful, EPA is proposing a separate set of performance requirements that would apply specifically to lower ranges (*i.e.,* those having a URL of less than 50 ppm) for CO analyzers. The proposed additional, lower-range requirements are listed in the proposed revised Table B–1. A candidate analyzer that meets the Table B–1 requirements for the standard measurement range (0 to 50 ppm) could optionally have one or more lower ranges included in its FRM or FEM designation by further testing to show that it also meets these proposed supplemental, lower-range requirements.

Although no substantive changes have been determined to be needed to the test procedures and associated provisions of subpart B for CO, the detailed language in many of the subpart B sections is in need of significant updates, clarifications, refinement, and (in a few cases) correction of minor typographical errors. EPA believes that these provisions should be amended at this time in its on-going, pollutant-by-pollutant effort to bring the entire content of subpart B fully up to date.

The proposed changes to the subpart B text (apart from the changes proposed for Table B–1 discussed above) are very minor and almost entirely editorial in nature, with no changes to the substance of the requirements. However, because these small changes are quite numerous, EPA believes that it is expedient and advantageous to propose replacement of the subpart B text, in its entirety, with the modified text. As discussed previously, Table B–1, which sets forth the pollutant-specific performance limits and was recently amended as applicable primarily to $SO_2$ analyzers, would be amended at this time only as necessary and applicable to CO analyzers. EPA intends to amend Table B–1 for the remaining pollutant methods ($O_3$ and $NO_2$) later, at such time as each of those pollutants—along with its associated FRM in part 50—is addressed specifically.

3. Implications for Air Monitoring Networks

As noted previously, existing CO FRM analyzers (no CO FEMs are presently available) are currently providing monitoring data that are adequate for the current CO NAAQS. Although EPA is proposing to re-promulgate the entire CO FRM, the changes are minor, with no substantive changes being proposed. Thus, this action would have little, if any, effect on existing air monitoring networks. Similarly, EPA is proposing revisions to subpart B of part 53, which specifies the testing and performance requirements for FRM and FEM analyzers. Again, the changes are minor, with the exception of the CO analyzer performance requirements in Table B–1, which EPA is proposing to make more consistent with modern CO analyzers representative of monitors used in the current CO monitoring network. These new requirements would be used for designation of new CO FRM and FEM analyzers. Existing EPA-designated FRMs would be unaffected by the proposed changes and would continue to be designated. As most commercially available CO FRM analyzers already meet the proposed new performance requirements, the cost of new CO analyzers that would meet the proposed new performance requirements would not be increased by the proposed new requirements. Therefore, there would be no immediate impact on monitoring agencies or on their CO monitoring networks due to the proposed amendments to the CO FRM and the associated new performance requirements proposed for subpart B.

In the longer term, the proposed new performance requirements would ensure that CO network monitors, going forward, would maintain their improved performance. Monitoring agencies would benefit by having greater confidence in their CO monitoring data quality, particularly at the lower ambient levels prevalent in most areas. Further, the assurance of increased CO data quality in years to come will provide better databases to support future reviews of the CO NAAQS.

*B. Network Design*

The objectives of an ambient monitoring network include the collection and dissemination of air pollution data to the general public in a timely manner, to determine compliance with ambient air quality standards and the effectiveness of emissions control strategies, and to provide support for air pollution research (40 CFR part 58, appendix D). This section on CO network design provides background on the monitoring network, information on the sources of CO, information on factors affecting CO emissions, and provides rationale for a proposed network design intended to support the implementation of the CO NAAQS.

1. Background

EPA issued the first regulations for ambient air quality surveillance, codified at 40 CFR part 58, for criteria pollutants including CO in 1979 (44 FR 27558, May 10, 1979). These 1979 regulations established a monitoring network for CO (described in detail in the CO Network Review and Background document [Watkins and Thompson, 2010]) that required two CO monitors in urban areas with 500,000 or more people. The first of these two monitors was a "peak" concentration monitor, intended to be located in areas "* * * around major traffic arteries and near heavily traveled streets in downtown areas." The second monitor was intended to represent a wider geographic area, particularly at neighborhood scales "where concentration exposures are significant." The 2006 monitoring rule (Revisions to Ambient Air Monitoring Regulations, 71 FR 61236 (October 17, 2006)) removed the minimum monitoring requirements for the ambient CO monitoring network that were promulgated in 1979. However, the 2006 monitoring rule maintained a requirement that if there was ongoing CO monitoring in an area, the area must have at least one monitor located to measure maximum concentration of CO in that area. The 2006 monitoring rule also included a provision requiring the approval of the EPA Regional Administrator before any existing CO ambient monitors could be removed. Finally, the 2006 monitoring rule included a requirement for CO monitors to be operated at all National Core (NCore) multi-pollutant monitoring stations; with approximately 80 stations projected to have been operational nationwide by January 1, 2011 to support multi-pollutant monitoring objectives.

An analysis of the available CO monitoring network data in the Air Quality System (AQS) database shows that the network was comprised of approximately 345 monitors during 2009. Information stored in AQS for these monitors describes the most frequently stated monitor objectives for sites in the current CO network as assessment of concentrations for general population exposure and maximum (highest) concentrations at the neighborhood scale.[58] Approximately 56 of the monitors operating in 2009 were at microscale sites, a majority of which were likely sites representing "peak" concentrations which were required under the monitoring regulations originally promulgated in 1979, intended to characterize mobile source impacts in heavily traveled downtown streets or near major arterial roads (Watkins and Thompson, 2010). The rest of these sites were likely being operated to meet objectives including NAAQS comparison, to support long-term trend determination, to meet State Implementation Plan (SIP) and maintenance plan requirements, and to support ongoing health studies.

2. On-Road Mobile Sources

The REA for this review notes that "motor vehicle emissions continue to be important contributors to ambient CO concentrations" (REA, section 2.2). Microenvironments influenced by on-road mobile sources are important contributors to ambient CO exposures, particularly in urban areas (REA, section 2.7), as indicated by personal exposure studies that have generally shown that the highest ambient CO exposure levels occur while people are in transit in motor vehicles (ISA, section 2.3). Mobile sources are the primary contributors to ambient CO emissions because CO is formed by incomplete combustion of carbon-containing fossil fuels widely used in motor vehicles (ISA, section 2.1; REA, section 3.3). Further, spark-ignition engines (gasoline or light-duty engines) have higher CO emission rates than diesel engines (heavy-duty engines) because they typically operate closer to the stoichiometric air-to-fuel ratio, have

[58] Spatial scales are defined in 40 CFR part 58 Appendix D, Section 1.2, where the scales of representativeness of most interest for the monitoring site types include:

1. Microscale—Defines the concentration in air volumes associated with area dimensions ranging from several meters up to about 100 meters.

2. Middle scale—Defines the concentration typical of areas up to several city blocks in size, with dimensions ranging from about 100 meters to 0.5 kilometers.

3. Neighborhood scale—Defines concentrations within some extended area of the city that has relatively uniform land use with dimensions in the 0.5 to 4.0 kilometers range.

4. Urban scale—Defines concentrations within an area of city-like dimensions, on the order of 4 to 50 kilometers. Within a city, the geographic placement of sources may result in there being no single site that can be said to represent air quality on an urban scale. The neighborhood and urban scales have the potential to overlap in applications that concern secondarily formed or homogeneously distributed air pollutants.

5. Regional scale—Defines usually a rural area of reasonably homogeneous geography without large sources, and extends from tens to hundreds of kilometers.

relatively short residence times at peak combustion temperatures, and have very rapid cooling of cylinder exhaust gases (ISA, section 3.2.1).

Ambient CO concentrations have significantly declined over the past 20 years, reflecting reductions in on-road vehicle emissions, as described in section II.A above. Overall, based on the 2002 National Emissions Inventory (NEI), on-road mobile sources account for approximately 52% of total CO emissions. Based on the more recent 2005 NEI, the contributions of on-road mobile sources has now risen to approximately 60% of the total CO emissions inventory (not counting wildfire emissions) (*http://www.epa.gov/ttn/chief/eiinformation.html*). As described in section II.A above, in some metropolitan areas in the U.S., as much as 75% of all CO emissions result from on-road vehicle exhaust (ISA, section 2.1).

On-road vehicle CO emission rates vary depending on operating conditions, such as cold-start conditions and operating speed. Under cold start conditions, which only last for the first minutes of vehicle operation, CO emissions are higher due to temporary ineffectiveness of vehicle exhaust catalysts until they are heated to optimal operating temperatures (ISA, section 3.2.1; Singer *et al.,* 1999). Meanwhile, CO emissions also vary based on vehicle operating speeds. Increased CO emissions occur under conditions of high acceleration, rapid speed fluctuations, and heavy vehicle loads (ISA, section 3.2.1). Studies have found that CO emission rates for tested light-duty vehicles are highest for accelerating vehicles, second highest for vehicles in cruise, third highest for vehicles under deceleration, and fourth highest (of four operating speed related categories) for vehicles at idle (Frey *et al.,* 2003). High acceleration and rapid speed fluctuations (such as acceleration and deceleration occurring over a short time period) can be associated with congested, stop-and-go traffic conditions.

3. Near-Road Environment

Information in the ISA and other peer-reviewed literature suggest that concentrations of mobile source pollutants, such as CO, typically display peak concentrations on or immediately adjacent to roads, typically producing a gradient in pollutant concentrations where concentrations decrease with increasing distance from roads (ISA, section 2.3; ISA, section 3.5.1.3; Baldauf *et al.,* 2008; Clements *et al.,* 2009; Karner *et al.,* 2010; Zhou and Levy, 2008; Zhu *et al.,* 2002). CO is emitted by on-road mobile sources, and is not secondarily formed in the near-road environment like $NO_2$ (which is both primarily emitted and secondarily formed in the near-road environment). As a result, the near-road gradient for CO can be quite steep, where concentrations rapidly decay with increasing distance away from the road when compared to other mobile source pollutants such as $NO_2$. Karner *et al.* (2010), synthesized findings from 41 near-road pollutant monitoring studies ranging from 1978 through June 2008 to advance the understanding of on-road mobile source pollutant dispersion. They performed two regression analyses, one being a local regression of background normalized concentrations on distance, and the second being a local regression of edge [of road] normalized concentrations on distance. These analyses found CO to have the highest approximate edge-of-road peaks, as much as 21 times background concentrations, of all pollutants analyzed, and also showed CO to have one of the fastest decay rates with increasing distance from the road, showing as much as a 90 percent drop in concentration 150 meters from the edge of the road. A key reason in the difference in decay rate with increasing distance from roads between CO and $NO_2$ is due to how the two pollutants are introduced into the near-road environment. CO is a primary emission from motor vehicle fuel combustion, while $NO_2$ is both emitted as a primary emission and secondarily formed in the near-road environment. The *Integrated Science Assessment for Oxides of Nitrogen—Health Criteria* ($NO_X$ ISA; USEPA, 2008d) notes that the direct emission of $NO_2$ from mobile sources is estimated to be only a few percent of the total $NO_X$ emissions for light duty gasoline vehicles, and from less than 10 percent up to 70 percent of the total $NO_X$ emission from heavy duty diesel vehicles, depending on the engine, the use of emission control technologies such as catalyzed diesel particulate filters (CDPFs), and mode of vehicle operation. Although much of the $NO_X$ emissions are initially in the form of NO, the rate of conversion of NO to $NO_2$ is generally a rapid process (*i.e.,* on the order of a minute) ($NO_X$ ISA, section 2.2.2). Thus, more of the $NO_2$ in the near-road environment is a result of secondary formation than from primary emissions, while CO is almost exclusively a result of direct emissions from tailpipes.

Overall, the literature suggests that CO concentrations generally return to near-background levels within a few hundred meters from the road (Karner *et al.,* 2010; Zhou and Levy, 2007). The actual concentrations of CO, and other mobile source pollutants such as $NO_X$ and particulate matter, that occur in the near-road environment, and the rate of decay of those pollutant concentrations with increasing distance from the road, are dependent on a number of variables including traffic volume, traffic fleet mix, roadway type, roadway design, surrounding features, topography (or terrain), and meteorology (Baldauf *et al.,* 2009; Baldauf *et al.,* 2008; Clements *et al.,* 2009; Hagler *et al.,* 2010; Heist *et al.,* 2009). EPA notes that these factors were taken into account in the requirements for the near-road $NO_2$ monitoring network, promulgated in February 2010 (75 FR 6474), which required near-road $NO_2$ sites to be selected with consideration given to traffic volume (via use of Annual Average Daily Traffic [AADT] counts), fleet mix, congestion patterns, roadway design, terrain, and meteorology.

4. Urban Downtown Areas and Urban Street Canyons

As noted above in section IV.B.2, increased CO emissions occur under operating conditions of high acceleration, rapid speed fluctuations (such as acceleration and deceleration occurring over a short time period), and increased vehicle loads (ISA, section 3.2.1). High acceleration and rapid speed fluctuations can be associated with congested traffic conditions, such as stop-and-go traffic, which can occur on heavily trafficked roads such as highways, freeways, and along major arterial roads, and also along roads with multiple intersections in relatively close proximity to each other. Thus, elevated CO concentrations, relative to surrounding background concentrations, can occur not only along heavily trafficked roads but also may be found in urban downtown areas, where a relatively higher number of roads exist in an area (high density of roads per unit area) and a relatively higher density of roadway intersections exist in an area (high roadway intersection per unit area), which can lead to increased occurrences of vehicles operating under modes of high acceleration and/or rapid speed fluctuations. Even though streets in urban downtown areas may not individually carry as much traffic as larger highways, freeways, or major arterials, the impact of many relatively smaller streets in close proximity carrying traffic experiencing periods of high acceleration and/or rapid speed fluctuations, or congested traffic, may collectively contribute to elevated CO concentrations in that downtown area.

In addition to traffic undergoing periods of high acceleration and/or rapid speed fluctuations or experiencing general traffic congestion, urban downtown areas often have a number of relatively tall buildings, typically in close proximity to each other. Such configurations of tall buildings in relatively close proximity often create urban features called urban canyons or urban street canyons. Although the term urban canyon, or urban street canyon, is not formally defined, it can generally be described as an urban feature, resembling a natural canyon [59], where streets or roads exist within dense blocks of relatively tall buildings. These urban features are of interest because, as noted in the ISA, recent research by Kaur and Nieuwenhuijsen (2009), and Carlaw *et al.* (2007), suggest CO concentrations are related to traffic volume and fleet mix in the urban street canyon environment, which can influence potential exposures. EPA has had monitoring requirements in the past that characterized concentrations of CO in heavily trafficked downtown streets, *i.e.* "urban street canyons," (Watkins and Thompson, 2010), and notes such locations may have still have relevance going forward.

5. Meteorological and Topographical Influences

In 2003, the National Research Council (NRC) of the National Academies published a document titled *Managing Carbon Monoxide Pollution in Meteorological and Topographical Problem Areas.* This report noted how drastically ambient CO concentrations had dropped across the country from the 1970s through the early 2000s, and that some of the remaining areas of the country that continued to have relatively high concentrations tended to have meteorological and topographical characteristics that exacerbate pollution. In particular, meteorological impacts can concentrate pollutant build-up in an area due to atmospheric inversions and cold temperatures. Atmospheric inversions essentially prevent pollutant emissions in an area from dispersing through vertical mixing. As explained by the NRC (NRC, 2003), the extent to which air mixes vertically depends on how the air temperature changes with altitude. Warm air is less dense than cold air and thus more buoyant, allowing surface air to mix upward as relatively warmer air rises in the atmosphere. However, if the vertical temperature profile is such that temperatures decrease more slowly than normal, or increase with height, vertical mixing is inhibited. Inversions can be caused by several different specific phenomena, including surface based cooling (for example, due to snow on the ground), due to high altitudes, and sometimes due to warm air advection at higher altitudes.

The topographical impacts that can lead to pollutant build-up in an area are typically due to physical terrain features that may aid in trapping pollution in an area and/or contribute to meteorological related inversions. An example of topographical impacts might be an urban area within a valley, or surrounded on several sides by mountain ranges. In such a case, pollutant dispersion is inhibited in the horizontal, with terrain features effectively preventing mixing or transport of pollution from a given area. Further, in some cases both meteorological and topographical impacts can combine to exacerbate pollutant build-up, such as in an area partially surrounded by high terrain which is also subject to inversions.

Although there is available information on what can cause increased potential for air pollutant build-up due to meteorological and topographical impacts, there are no easily defined or applied criteria that could be implemented nationally by which all such locations could be identified. Identification of such locations would require a case-by-case approach, where localized and detailed information on terrain and meteorology would be needed, plus an understanding of the types and amounts of emission sources in or around any particular area.

6. Proposed Changes

Although EPA is proposing to retain the current 8-hour and 1-hour CO NAAQS, as discussed above in section II, the Agency is proposing to revise the requirements for the ambient CO monitoring network to include a minimum set of monitors to collect data for comparison to the NAAQS in near-roadway locations where CO emissions associated with mobile source related activity lead to increased ambient concentrations. The current network of CO monitors, beyond those at NCore sites, consists of monitors that were established to meet the 1979 monitoring rule requirements or which were placed by State and local air monitoring agencies to meet their own needs or objectives. These additional monitors in the current network are being operated without being required under EPA monitoring network regulations and as a result, they do not reflect a national monitoring network design. In CASAC comments on the second draft REA, the CASAC panel, aware of the current CO monitoring network configuration, commented on the need to reconsider CO monitoring network designs, stating that " * * * the approach for siting [CO] monitors needs greater consideration. More extensive coverage may be warranted for areas where concentrations may be more elevated, such as near roadway locations" (Brain and Samet, 2010b). Since there is a strong relationship between CO exposures and mobile source activity, as described in the ISA and REA and summarized in sections II.D.2 and IV.B.2 above, primarily in the near-road environment, EPA believes that some CO monitors should be located near on-road mobile source activity, where ambient concentrations are expected to be more elevated, as noted by CASAC.

Accordingly, EPA is proposing to require locating ambient CO monitors which would produce data for comparison to both the 8-hour and 1-hour NAAQS at a subset of near-road $NO_2$ monitoring stations, which are required under the Primary National Ambient Air Quality Standards for Nitrogen Dioxide; Final Rule (75 FR 6474), codified at 40 CFR part 58, appendix D. This requirement would support the objective of characterizing ambient conditions at highly trafficked near-road locations where elevated CO concentrations (relative to surrounding background concentrations) are expected to occur.

The EPA is not proposing to require dedicated CO monitoring sites to characterize area-wide concentrations representing neighborhood and larger spatial scales. Based on a recent review of the current CO monitoring network (Watkins and Thompson, 2010), EPA believes that the required NCore sites and many of the existing monitoring sites in the network provide data representative of neighborhood and larger spatial scales. These monitors are useful in providing relative background concentrations that, when compared to near-road CO monitors, could aid in the quantification of the near-road gradient of CO in a given urban area. Between the required NCore sites, and an expectation based on experience that some number of non-required area-wide sites will continue to operate in the future, we do not believe it is necessary to propose a specific area-wide monitoring requirement in this rulemaking.

EPA believes that the proposed network design which places CO monitors at a subset of near-road $NO_2$

[59] A natural canyon may be defined as a "deep narrow valley with steep sides" (*http://www.merriam-webster.com/dictionary/canyon*).

monitoring stations, as described in detail in the following sections, will require a relatively modest amount of new resources by State and local air agencies. Recalling that there were approximately 345 CO monitors operating in 2009, which were largely discretionary monitors not operated pursuant to Federal network design requirements, the Agency believes that a large majority of State and local air agencies could meet the proposed minimum monitoring requirements by relocating an existing CO monitor to a near-road $NO_2$ monitoring station. In some of these cases, the EPA believes that the relocation of a CO monitor from an existing stand-alone site to a multi-pollutant near-road $NO_2$ site may also result in additional operational cost savings as, in some areas, the total number of ambient monitoring sites for which operational support is needed could be reduced.

The EPA believes that the proposed requirement for placing CO monitors at some of the forthcoming near-road $NO_2$ monitoring stations would provide an important benefit by facilitating the implementation of a more targeted ambient CO monitoring network that provides data for comparison to the NAAQS, and is considerably smaller than the CO network currently in operation. EPA notes that under the current regulation, the current CO network is subject to a potentially significant reduction in size (as detailed in Watkins and Thompson, 2010) since non-required CO monitoring stations can be shut down upon State request, an evaluation of historical data to evaluate concentrations relative to the NAAQS (per 40 CFR 58.14), and EPA Regional Administrator approval. The occurrence of such a reduction, however, would lack the focus and direction needed to ensure retention of a network with the surveillance aspects essential to supporting the implementation of the CO NAAQS. In addition to ensuring that an effective, modestly sized network shall operate in the future, other benefits of the proposed approach of co-locating required CO monitors at required near-road $NO_2$ monitoring stations include: ongoing comparison of data to the NAAQS (for assessing attainment), providing data that can support health studies, providing data that can be used in verification of modeling results, and supporting the implementation of the Agency's multi-pollutant monitoring objectives.[60]

a. Monitoring for Carbon Monoxide at Required Near-Road Nitrogen Dioxide Monitoring Stations

Traffic volume on urban area roads is much greater than in the more rural areas of the country, as was noted in the preamble to the final rule to the $NO_2$ NAAQS (75 FR 6474). The U.S. Department of Transportation Federal Highway Administration's Status of the Nation's Highways, Bridges, and Transit: 2008 Conditions and Performance document (*http://www.fhwa.dot.gov/policy/2008cpr/es.htm#c2b*) states that "while urban mileage constitutes only 25.8 percent of total (U.S.) mileage, these roads carried 66.3 percent of the 3 trillion vehicles miles travelled (VMT) in the United States in 2006." The document also states that urban interstate highways made up only 0.8 percent of total (U.S.) mileage but carried 16.3 percent of total VMT.

The EPA notes that the 2007 American Housing Survey (*http://www.census.gov/hhes/www/housing/ahs/ahs07/ahs07.html*) estimates that over 20 million housing units are within 300 feet (~91 meters) of a 4-lane highway, airport, or railroad. Using the same survey, and considering that the average number of residential occupants in a housing unit is approximately 2.25, it is estimated that at least 45 million American citizens live near 4-lane highways, airports, or railroads. Among these three transportation facilities, roads are the most pervasive of the three, suggesting that a significant number of people may live near major roads. Furthermore, the 2008 American Time Use Survey (*http://www.bls.gov/tus/*) reported that the average U.S. civilian spent over 70 minutes traveling per day, and as recognized in section II.D.2.b, the exposure and dose assessment for this review found in-vehicle microenvironments to be those with the highest ambient CO exposures. Additionally, as described in the ISA, PA and the REA, higher concentrations are reported at locations immediately near or on roadways as compared to monitors somewhat removed from the roadways (ISA, section 3.6; PA, section 2.2.1; REA, section 2.7). These locations capture ambient concentrations that contribute to ambient exposure concentrations occurring in vehicles. Accordingly, EPA believes that air pollution monitors near major roads will provide information pertaining to a significant component of ambient CO exposure for a large portion of the population that would otherwise not be available.

The EPA recognizes the information mentioned above regarding the dominant role of mobile sources in the national CO emission inventory (discussed in section IV.B.2 above), findings of the substantial near-road concentration gradient, with elevated CO concentrations in the near-road environment compared to relative background concentrations (discussed in section IV.B.3 above), and the importance of on-road mobile sources as contributors to ambient CO exposures particularly in urban areas (REA, section 2.7). We also note that (as referenced above) CASAC indicated that additional monitoring near roadways may be warranted, and further stated "the Panel found in some instances current networks underestimated carbon monoxide levels near roadways. Such underestimation is a critical issue * * *" (Brain and Samet, 2010b). In light of this information, and the fact that we generally expect the increased levels of ambient CO (and the greatest exposure to ambient CO) to occur near-roadways, EPA has determined that it is appropriate to propose requiring CO monitoring near heavily trafficked roads in urban areas.

EPA additionally notes that near-road $NO_2$ monitoring sites will be placed near highly trafficked roads in urban areas, where elevated CO concentrations due to on-road mobile sources are known to occur, and that CASAC has recommended that EPA establish a near-road monitoring network that would include sites with both $NO_2$ and CO monitors (Russell and Samet, 2010). Accordingly, the EPA is proposing to require CO monitors that will provide data for comparison to the NAAQS to operate at a subset of required near-road $NO_2$ monitoring stations, which are required in 40 CFR part 58, appendix D. Specifically, the EPA is proposing that CO monitors be required in any required near-road $NO_2$ monitoring station in a core based statistical area (CBSA) with a population of 1,000,000 or more persons. Based on 2009 U.S. Census estimates (*http://www.census.gov*) and Federal Highway Administration data (*http://www.fhwa.dot.gov/policyinformation/tables/02.cfm*) applied to near-road $NO_2$ network design requirements (noted above), there would be approximately 77 CO monitoring sites required within near-road $NO_2$ monitoring stations within 53 CBSAs (including San Juan, PR).[61]

[60] The EPA's strategy encouraging multi-pollutant monitoring is presented most recently in the *Ambient Air Monitoring Strategy for State, Local, and Tribal Air Agencies* document published December 2008 (*http://www.epa.gov/ttn/amtic/files/ambient/monitorstrat/AAMS%20for%20SLTs%20%20-%20FINAL%20Dec%202008.pdf*).

[61] The near-road $NO_2$ monitoring stations, which are proposed to house required CO monitors, shall

In this proposal, EPA concludes that, given the strong relationship between CO exposures and mobile source activity, placing CO monitors at near-road $NO_2$ monitoring sites (which will be near highly trafficked roads in urban areas) is needed to fulfill the ambient CO monitoring objectives identified in section IV.B above. While having two monitors within CBSAs of 500,000 or more persons was the historical monitoring requirement (discussed in detail in Watkins and Thompson, 2010), with declining ambient levels we believe there is less likelihood for high CO concentrations in relatively smaller (in population) CBSAs. Accordingly, we believe that proposing to require CO monitoring only in near-road $NO_2$ monitoring stations in CBSAs of 1,000,000 or more persons is a reasonable approach that results in a sufficient number of CO monitors near highly trafficked roads in urban areas to provide data for supporting the NAAQS, for use in health studies, for model validation, and to support multi-pollutant monitoring objectives. The EPA solicits comment upon the proposed requirement to require CO monitors to operate within a subset of required near-road $NO_2$ monitoring stations, specifically those in CBSAs with 1,000,000 or more persons. The EPA solicits comment on using alternative population thresholds within which CO monitors might be required to operate in near-road $NO_2$ monitoring stations, *e.g.* CBSAs with 750,000 or 500,000 or more persons (which would require approximately 92 and 126 monitors, respectively), in light of the proposal to retain the existing CO NAAQS. Finally, the EPA also solicits comment on the merits of having any minimum near-road monitoring requirements for the CO monitoring network.

b. Regional Administrator Authority

The EPA is proposing to include a provision allowing the Regional Administrators to have the discretion to require monitoring above the minimum requirements as necessary to address situations where minimum monitoring requirements are not sufficient to meet monitoring objectives presented above in section IV.B.1. The EPA recognizes that minimum monitoring requirements may not always result in a network sufficient to fulfill one or more data needs or monitoring objectives for a particular area. An example of when an EPA Regional Administrator might require an additional monitor above the minimum requirements is to address a situation where data or other information suggest that a stationary CO source may be contributing to ground level concentrations that are approaching or exceeding the NAAQS. A second example of where an EPA Regional Administrator might require additional monitoring is in otherwise unmonitored urban downtown areas or urban street canyons (as discussed above in section IV.B.4), where data or other information suggest CO concentrations may be approaching or exceeding the NAAQS. A third example of where an EPA Regional Administrator might require additional monitoring is in unmonitored areas that are subject to high ground level CO concentrations particularly due to or enhanced by topographical and meteorological impacts, as discussed in section IV.B.5 above. In all cases, the Regional Administrator and the responsible State or local air monitoring agency should work together to design and/or maintain the most appropriate CO network to service monitoring objectives and any particular variety of data needs for an area.

c. Required Network Implementation

EPA proposes that state and, when appropriate, local air monitoring agencies provide a plan for deploying required CO monitors by July 1, 2012. We also propose that the ambient CO monitoring network be physically established no later than January 1, 2013. These dates correspond with the implementation schedule of the required near-road $NO_2$ sites, which are the same locations at which CO monitors have been proposed to be placed. EPA solicits comment on these proposed implementation dates.

7. Microscale Carbon Monoxide Monitor Siting Criteria

Carbon monoxide monitors that are proposed to operate at near-road $NO_2$ sites would likely be classified as microscale-type sites, per the general definition of microscale sites in 40 CFR part 58, appendix D, section 1.2. Such CO monitors would be paired with $NO_2$ monitors required to have inlet probe heights between 2 and 7 meters, and be placed within 50 meters of a target road segment. However, when the original minimum monitoring requirements for CO were introduced in the 1979 monitoring rule (44 FR 27571), the siting criteria codified for microscale CO sites was specifically intended to account for the installation of a near-road site in street canyon or street corridor locations. The specific siting criteria for microscale CO sites, currently located at 40 CFR part 58, appendix E, section 6.2, and listed in Table E–4 of appendix E, state that "the inlet probes for microscale carbon monoxide monitors that are being used to measure concentrations near roadways must be between 2.5 and 3.5 meters above ground level." Likewise, criteria currently located at 40 CFR part 58, appendix E, section 6.2, and listed in Table E–4 of appendix E state that microscale CO monitors are to be between 2 and 10 meters from the edge of the nearest traffic lane. These siting criteria, originally developed in 1979, were for use primarily in the urban downtown and urban street canyon environment. In that type of urban environment, such specific and relatively tight siting criteria were, and still are, appropriate since there is often little space within which ambient air monitoring inlets can be accommodated due to the typical dense configuration of buildings. However, outside of the urban downtown and urban street canyon environment, such criteria may be less applicable, considering site placement logistics and site safety for monitoring near the major highways, freeways, interstates, and major arterials that carry so much of today's urban traffic volume.

As noted above, the intent of existing microscale CO siting criteria reflects the historical intent of monitoring in urban downtown areas and urban street canyons. Since EPA is proposing that CO monitors be required to operate at a subset of near-road $NO_2$ sites to characterize roadway pollutant concentrations the majority of which are not anticipated to be in urban street canyons, EPA has revisited the appropriateness of the existing microscale CO siting requirement, particularly for near-road sites that exist outside of the downtown urban areas and urban street canyons. EPA consulted on this issue with the CASAC Ambient Air Monitoring and Methods Subcommittee (CASAC–AAMMS) in September, 2010. Specifically, EPA requested feedback on whether it would be appropriate to revise existing microscale CO siting criteria to match those of near-road $NO_2$ monitors and microscale $PM_{2.5}$ monitors. In their response to EPA, the CASAC–AAMMS recommended "that sampling criteria for CO and other monitors at sites installed to monitor [at] near-road $NO_2$ [sites] match those for $NO_2$." The CASAC–

be selected per considerations spelled out in 40 CFR part 58, Appendix D, section 4.3.2(a)(1), which prescribes site selection by ranking all road segments in a CBSA by AADT and then identifying a location or locations adjacent to those highest ranked road segments, considering fleet mix, roadway design, congestion patterns, terrain, and meteorology.

AAMMS also noted that "sampling configurations of existing microscale CO monitors should be assessed in terms of their own sampling objectives, and need not necessarily conform to those of near-road $NO_2$ monitors" (Russell and Samet, 2010).

Based in part on the CASAC–AAMMS comments above, EPA believes that it is appropriate to revise the existing siting criteria for microscale CO monitors to encompass both the current criteria, which are still appropriate when monitoring in the urban downtown and/or urban street canyon environment, as well as the criteria for near-road $NO_2$ sites. Therefore, EPA is proposing that microscale CO siting criteria for probe height and horizontal spacing be changed to match those of near-road $NO_2$ sites as prescribed in 40 CFR part 58 appendix E, sections 2, 4(d), 6.4(a), and Table E–4. Specifically, EPA proposes to allow microscale CO monitor inlet probes to be between 2 and 7 meters above the ground; that CO monitor inlet probes be placed so they have an unobstructed air flow, where no obstacles exist at or above the height of the monitor probe, between the monitor probe and the outside nearest edge of the traffic lanes of the target road segment; and that the CO monitor inlet probe shall be as near as practicable to the outside nearest edge of the traffic lanes of the target road segment, but shall not be located at a distance greater than 50 meters in the horizontal from the outside nearest edge of the traffic lanes of the target road segment.

These proposed siting criteria encompass, or bracket, the current allowable vertical and horizontal spacing criteria for microscale CO sites, which will allow current microscale CO sites to continue to meet siting criteria. EPA believes the proposed revision to the microscale CO siting criteria presented above will allow States to meet siting criteria while co-locating required microscale CO monitors with required near-road $NO_2$ monitors near heavily trafficked roads outside of urban downtown areas and urban street canyons. EPA solicits comment upon the revised CO siting requirements proposed above. The Agency also solicits comment upon whether it should create two distinct sets of siting criteria for microscale CO monitoring. One set of siting criteria would be those proposed above, while the second set would be the current siting criteria, but directed specifically to apply to existing or new microscale CO monitoring sites located in downtown urban areas and urban street canyons.

## V. Statutory and Executive Order Reviews

### *A. Executive Order 12866: Regulatory Planning and Review*

Under Executive Order 12866 (58 FR 51735, October 4, 1993), this action is a "significant regulatory action" because it was deemed to "raise novel legal or policy issues." Accordingly, EPA submitted this action to the Office of Management and Budget (OMB) for review under Executive Order 12866 and any changes made in response to OMB recommendations have been documented in the docket for this action.

### *B. Paperwork Reduction Act*

The information collection requirements in this final rule have been submitted for approval to the Office of Management and Budget (OMB) under the Paperwork Reduction Act, 44 U.S.C. 3501 *et seq.* The information collection requirements are not enforceable until OMB approves them. The Information Collection Request (ICR) document prepared by EPA for these revisions to part 58 has been assigned EPA ICR number 0940.23.

The information collected under 40 CFR part 53 (*e.g.,* test results, monitoring records, instruction manual, and other associated information) is needed to determine whether a candidate method intended for use in determining attainment of the National Ambient Air Quality Standards (NAAQS) in 40 CFR part 50 will meet comparability requirements for designation as a Federal reference method (FRM) or Federal equivalent method (FEM). We do not expect the number of FRM or FEM determinations to increase over the number that is currently used to estimate burden associated with CO FRM/FEM determinations provided in the current ICR for 40 CFR part 53 (EPA ICR numbers 0940.23). As such, no change in the burden estimate for 40 CFR part 53 has been made as part of this rulemaking.

The information collected and reported under 40 CFR part 58 is needed to determine compliance with the NAAQS, to characterize air quality and associated health impacts, to develop emissions control strategies, and to measure progress for the air pollution program. The amendments would revise the technical requirements for CO monitoring sites, require the relocation or siting of ambient CO air monitors, and the reporting of the collected ambient CO monitoring data to EPA's Air Quality System (AQS). The annual average reporting burden for the collection under 40 CFR part 58 (averaged over the first 3 years of this ICR) for a network of 311 CO monitors is $7,235,483. Burden is defined at 5 CFR 1320.3(b). State, local, and Tribal entities are eligible for State assistance grants provided by the Federal government under the CAA which can be used for monitors and related activities.

An agency may not conduct or sponsor, and a person is not required to respond to, a collection of information unless it displays a currently valid OMB control number. The OMB control numbers for EPA's regulations in 40 CFR are listed in 40 CFR part 9.

To comment on the Agency's need for this information, the accuracy of the provided burden estimates, and any suggested methods for minimizing respondent burden, EPA has established a public docket for this rule, which includes this ICR, under Docket ID number EPA–HQ–OAR–2008–0015. Submit any comments related to the ICR to EPA and OMB. *See* **ADDRESSES** section at the beginning of this notice for where to submit comments to EPA. Send comments to OMB at the Office of Information and Regulatory Affairs, Office of Management and Budget, 725 17th Street, NW, Washington, DC 20503, Attention: Desk Office for EPA. Since OMB is required to make a decision concerning the ICR between 30 and 60 days after February 11, 2011, a comment to OMB is best assured of having its full effect if OMB receives it March 14, 2011. The final rule will respond to any OMB or public comments on the information collection requirements contained in this proposal.

### *C. Regulatory Flexibility Act*

The Regulatory Flexibility Act (RFA) generally requires an agency to prepare a regulatory flexibility analysis of any rule subject to notice and comment rulemaking requirements under the Administrative Procedure Act or any other statute unless the agency certifies that the rule will not have a significant economic impact on a substantial number of small entities. Small entities include small businesses, small organizations, and small governmental jurisdictions.

For purposes of assessing the impacts of today's proposed rule on small entities, small entity is defined as: (1) A small business that is a small industrial entity as defined by the Small Business Administration's (SBA) regulations at 13 CFR 121.201; (2) a small governmental jurisdiction that is a government of a city, county, town, school district or special district with a population of less than 50,000; and (3) a small

organization that is any not-for-profit enterprise which is independently owned and operated and is not dominant in its field.

After considering the economic impacts of this proposed rule on small entities, I certify that this action will not have a significant economic impact on a substantial number of small entities. This proposed rule will not impose any requirements on small entities. Rather, this rule proposes to retain existing national standards for allowable concentrations of CO in ambient air as required by section 109 of the CAA. *See* also *American Trucking Associations* v. *EPA.* 175 F. 3d at 1044–45 (NAAQS do not have significant impacts upon small entities because NAAQS themselves impose no regulations upon small entities). Similarly, the proposed amendments to 40 CFR part 58 address the requirements for States to collect information and report compliance with the NAAQS and will not impose any requirements on small entities. We continue to be interested in the potential impacts of the proposed rule on small entities and welcome comments on issues related to such impacts.

*D. Unfunded Mandates Reform Act*

Title II of the Unfunded Mandates Reform Act of 1995 (UMRA), Public Law 104–4, establishes requirements for Federal agencies to assess the effects of their regulatory actions on State, local, and Tribal governments and the private sector. Unless otherwise prohibited by law, under section 202 of the UMRA, EPA generally must prepare a written statement, including a cost-benefit analysis, for proposed and final rules with "Federal mandates" that may result in expenditures to State, local, and Tribal governments, in the aggregate, or to the private sector, of $100 million or more in any one year (adjusted for inflation). Before promulgating an EPA rule for which a written statement is required under section 202, section 205 of the UMRA generally requires EPA to identify and consider a reasonable number of regulatory alternatives and to adopt the least costly, most cost-effective or least burdensome alternative that achieves the objectives of the rule. The provisions of section 205 do not apply when they are inconsistent with applicable law. Moreover, section 205 allows EPA to adopt an alternative other than the least costly, most cost-effective or least burdensome alternative if the Administrator publishes with the final rule an explanation why that alternative was not adopted. Before EPA establishes any regulatory requirements that may significantly or uniquely affect small governments, including Tribal governments, it must have developed under section 203 of the UMRA a small government agency plan. The plan must provide for notifying potentially affected small governments, enabling officials of affected small governments to have meaningful and timely input in the development of EPA regulatory proposals with significant Federal intergovernmental mandates, and informing, educating, and advising small governments on compliance with the regulatory requirements.

This action is not subject to the requirements of sections 202 and 205 of the UMRA. EPA has determined that this proposed rule does not contain a Federal mandate that may result in expenditures of $100 million or more for State, local, and Tribal governments, in the aggregate, or the private sector in any one year (adjusted for inflation). This rule proposes to retain existing national ambient air quality standards for carbon monoxide. The expected costs associated with the monitoring requirements are described in EPA's ICR document, but those costs are expected to be well less than $100 million (adjusted for inflation) in the aggregate for any year. Furthermore, as indicated previously, in setting a NAAQS, EPA cannot consider the economic or technological feasibility of attaining ambient air quality standards.

EPA has determined that this proposed rule contains no regulatory requirements that might significantly or uniquely affect small governments because it imposes no enforceable duty on any small governments. Therefore, this rule is not subject to the requirements of section 203 of the UMRA.

*E. Executive Order 13132: Federalism*

This action does not have federalism implications. It will not have substantial direct effects on the States, on the relationship between the national government and the States, or on the distribution of power and responsibilities among the various levels of government, as specified in Executive Order 13132. The rule does not alter the relationship between the Federal government and the States regarding the establishment and implementation of air quality improvement programs as codified in the CAA. Under section 109 of the CAA, EPA is mandated to establish and review NAAQS; however, CAA section 116 preserves the rights of States to establish more stringent requirements if deemed necessary by a State. Furthermore, this proposed rule does not impact CAA section 107 which establishes that the States have primary responsibility for implementation of the NAAQS. Finally, as noted in section D (above) on UMRA, this rule does not impose significant costs on State, local, or Tribal governments or the private sector. Thus, Executive Order 13132 does not apply to this rule.

However, as also noted in section D (above) on UMRA, EPA recognizes that States will have a substantial interest in this rule, including the proposed air quality surveillance requirements of 40 CFR part 58. Therefore, in the spirit of Executive Order 13132, and consistent with EPA policy to promote communications between EPA and State and local governments, EPA specifically solicits comment on this proposed rule from State and local officials.

*F. Executive Order 13175: Consultation and Coordination With Indian Tribal Governments*

This action does not have Tribal implications, as specified in Executive Order 13175 (65 FR 67249, November 9, 2000). It does not have a substantial direct effect on one or more Indian Tribes, since Tribes are not obligated to adopt or implement any NAAQS. Thus, Executive Order 13175 does not apply to this rule.

*G. Executive Order 13045: Protection of Children From Environmental Health and Safety Risks*

This action is not subject to EO 13045 (62 FR 19885, April 23, 1997) because it is not economically significant as defined in EO 12866, and because the Agency does not believe the environmental health or safety risks addressed by this action present a disproportionate risk to children. This action's health and risk assessments are described in sections II.C and II.D.2.b.

The public is invited to submit comments or identify peer-reviewed studies and data that assess effects of early life exposures to CO.

*H. Executive Order 13211: Actions That Significantly Affect Energy Supply, Distribution or Use*

This action is not a "significant energy action" as defined in Executive Order 13211, (66 FR 28355 (May 22, 2001)) because it is not likely to have a significant adverse effect on the supply, distribution, or use of energy. The rule concerns the review of the NAAQS for CO. The rule does not prescribe specific pollution control strategies by which these ambient standards will be met. Such strategies are developed by States on a case-by-case basis, and EPA cannot predict whether the control options selected by States will include

regulations on energy suppliers, distributors, or users.

*I. National Technology Transfer and Advancement Act*

Section 12(d) of the National Technology Transfer and Advancement Act of 1995 (NTTAA), Public Law 104–113, section 12(d) (15 U.S.C. 272 note) directs EPA to use voluntary consensus standards in its regulatory activities unless to do so would be inconsistent with applicable law or otherwise impractical. Voluntary consensus standards are technical standards (*e.g.,* materials specifications, test methods, sampling procedures, and business practices) that are developed or adopted by voluntary consensus standards bodies. The NTTAA directs EPA to provide Congress, through OMB, explanations when the Agency decides not to use available and applicable voluntary consensus standards.

This proposed rulemaking involves technical standards with regard to ambient monitoring of CO. We have not identified any potentially applicable voluntary consensus standards that would adequately characterize ambient CO concentrations for the purposes of determining compliance with the CO NAAQS and none have been brought to our attention.

EPA welcomes comments on this aspect of the proposed rule, and specifically invites the public to identify potentially applicable voluntary consensus standards and to explain why such standards should be used in the regulation.

*J. Executive Order 12898: Federal Actions To Address Environmental Justice in Minority Populations and Low-Income Populations*

Executive Order 12898 (59 FR 7629 (Feb. 16, 1994)) establishes Federal executive policy on environmental justice. Its main provision directs Federal agencies, to the greatest extent practicable and permitted by law, to make environmental justice part of their mission by identifying and addressing, as appropriate, disproportionately high and adverse human health or environmental effects of their programs, policies, and activities on minority populations and low-income populations in the United States.

EPA has determined that this proposed rule will not have disproportionately high and adverse human health or environmental effects on minority or low-income populations because it does not affect the level of protection provided to human health or the environment. The action proposed in this notice is to retain without revision the existing NAAQS for CO. Therefore this action will not cause increases in source emissions or air concentrations.

**References**


Adams K.F.; Koch G.; Chatterjee B.; Goldstein G.M.; O'Neil J.J.; Bromberg P.A.; Sheps D.S.; McAllister S.; Price C.J.; Bissette J. (1988) Acute elevation of blood carboxyhemoglobin to 6% impairs exercise performance and aggravates symptoms in patients with ischemic heart disease. J. Am. Coll. Cardiol. 12:900–909.

Allred E.N.; Bleecker E.R.; Chaitman B.R.; Dahms T.E.; Gottlieb S.O.; Hackney J.D.; Pagano M.; Selvester R.H.; Walden S.M.; Warren J. (1989a) Short-term effects of carbon monoxide exposure on the exercise performance of subjects with coronary artery disease. N. Engl. J. Med. 321:1426–1432.

Allred E.N.; Bleecker, E.R.; Chaitman B.R.; Dahms T.E.; Gottlieb S.O.; Hackney J.D.; Hayes D.; Pagano M.; Selvester R.H.; Walden S.M.; Warren J. (1989b) Acute effects of carbon monoxide exposure on individuals with coronary artery disease. Cambridge, MA: Health Effects Institute; research report no. 25.

Allred E.N.; Bleecker E.R.; Chaitman B.R.; Dahms T.E.; Gottlieb S.O.; Hackney J.D.; Pagano M.; Selvester R.H.; Walden S.M.; Warren J. (1991) Effects of carbon monoxide on myocardial ischemia. Environ. Health Perspect. 91:89–132.

AHA. (2003) Heart and Stroke Facts. American Heart Association, Dallas, TX. Available at: *http://www.americanheart.org/downloadable/heart/1056719919740HSFacts2003text.pdf*

Anderson E.W.; Andelman R.J.; Strauch J.M.; Fortuin N.J. and Knelson, J.H. (1973) Effect of low level carbon monoxide exposure on onset and duration of angina pectoris. Annals of Internal Medicine 79:46–50.

Baldauf R.; Thoma E.; Hays M.; Shores R.; Kinsey J.; Gullett B.; Kimbrough S.; Isakov V.; Long T.; Snow R.; Khlystov A.; Weinstein J.; Chen F.L.; Seila R.; Olson D.; Gilmour I.; Cho S.H.; Watkins N.; Rowley P.; Bang J. (2008a). Traffic and meteorological impacts on near-road air quality: Summary of methods and trends from the Raleigh near-road study. J Air Waste Manag Assoc, 58:865–878. 190239

Baldauf R.; Thoma E.; Khlystov A.; Isakov V.; Bowker G.; Long T.; Snow R. (2008b). Impacts of noise barriers on near-road air quality. Atmos Environ, 42: 7502–7507.

Baldauf, R.; Watkins, N.; Heist, D.; Bailey, C.; Rowley, P.; Shores, R. (2009) Near-road air quality monitoring: Factors affecting network design and interpretation of data. Air Qual. Atmos. Health. 2:1–9.

Basan M.M. (1990) Letter to the Editor. N. Engl J Med 332:272.

Bell M.L.; Peng R.D.; Dominici F.; Samet J.M. (2009) Emergency admissions for cardiovascular disease and ambient levels of carbon monoxide: Results for 126 U.S. urban counties, 1999–2005. Circulation, 120:949–955.

Bissette J.; Carr G.; Koch G.G.; Adams K.F.; Sheps D.S. (1986) Analysis of (events/time at risk) ratios from two period crossover studies. In: American Statistical Association 1986 proceedings of the Biopharmaceutical Section; August; Chicago, IL., Washington, DC: American Statistical Asssociation ; pp. 104–108.

Brain, J.D. (2009) Letter from Dr. J.D. Brain to Administrator Lisa Jackson. Re: Consultation on EPA's Carbon Monoxide National Ambient Air Quality Standards: Scope and Methods Plan for Health Risk and Exposure Assessment. CASAC–09–012. July 14, 2009.

Brain J. and Samet J. (2009) Letter from Drs. J.D. Brain and J.M. Samet to Administrator Lisa Jackson. Re: Review of EPA's Integrated Science Assessment for Carbon Monoxide (First External Review Draft) EPA–CASAC–09–011. June 24, 2009.

Brain, J.D. and Samet, J.M. (2010a) Letter from Drs. J.D. Brain and J.M. Samet to Administrator Lisa Jackson. Re: Review of the Risk and Exposure Assessment to Support the Review of the Carbon Monoxide (CO) Primary National Ambient Air Quality Standards: First External Review Draft. EPA–CASAC–10–006. February 12, 2010.

Brain J.D. and Samet J.M. (2010b) Letter from Drs. J.D. Brain and J.M. Samet to Administrator Lisa Jackson. Re: Review of the Risk and Exposure Assessment to Support the Review of the Carbon Monoxide (CO) Primary National Ambient Air Quality Standards: Second External Review Draft. EPA–CASAC–10–012. May 19, 2010.

Brain J.D. and Samet J.M. (2010c) Letter from Drs. J.D. Brain and J.M. Samet to Administrator Lisa Jackson. Re: Review of the Policy Assessment for the Review of the Carbon Monoxide National Ambient Air Quality Standards (NAAQS): External Review Draft. EPA–CASAC–10–013. June 8, 2010.

Brain J.D. and Samet J.M. (2010d) Letter from Drs. J.D. Brain and J.M. Samet to Administrator Lisa Jackson. Re: Review of Integrated Science Assessment for Carbon Monoxide (Second External Review Draft). EPA–CASAC–10–005. January 20, 2010.

Carslaw D.C.; Beevers S.D.; Tate J.E. (2007) Modelling and assessing trends in traffic-related emissions using a generalised additive modelling approach. Atmos Environ, 41: 5289–5299.

Clements, A.; Jia, Y.; Denbleyker, A.; McDonald-Buller, E.; Fraser, M.; Allen, D.; Collins, D.; Michel, E.; Pudota, J.; Sullivan, D.; Zhu, Y. (2009) Air pollutant concentrations near three Texas roadways, part II: Chemical characterization and transformation of pollutants. Atmos Environ. 43:4523–4534.

Forster P.; Ramaswamy V.; Artaxo P.; Berntsen T.; Betts R.; Fahey D.W.; Haywood J.; Lean J.; Lowe D.C.; Myhre G.; Nganga J.; Prinn R.; Raga G.; Schultz M.; Van Dorland R. (2007) Changes in atmospheric constituents and in radiative forcing, Chapter 2. In Solomon S; Qin D; Manning M; Chen Z; Marquis M; Averyt KB; Tignor M; Miller HL (Ed.) IPCC Fourth Assessment Report (AR4): Climate Change 2007: Working Group I Report: The Physical Science Basis. (pp. 129–234). Cambridge, U.K. and New York, NY:

Intergovernmental Panel on Climate Change; Cambridge University Press.
Frey, C.; Unal, A.; Rouphail, N.M.; Colyar, J.D. (2003) On-Road Measurement of Vehicle Tailpipe Emissions Using a Portable Instrument. J. Air & Waste Manage. Assoc. 53:992–1002.
Hagler, G.; Thoma, E.; Baldauf, R. (2010) High-Resolution Mobile Monitoring of Carbon Monoxide and Ultrafine Particle Concentrations in a Near-Road Environment. Air & Waste Manage. Assoc., 60:328–336.
Henderson R. (2008) Letter from Dr. Rogene Henderson, Chairman, Clean Air Scientific Advisory Committee, to Administrator Stephen Johnson. Re: Consultation on EPA's Draft Plan for Review of the Primary NAAQS for Carbon Monoxide CASAC–08–013. June 12, 2008.
Heist, D.; Perry, S.; Brixey, L. (2009). A wind tunnel study of the effect of roadway configurations on the dispersion of traffic-related pollution. Atmos Environ, 43:5101–5111.
Johnson T.; Capel J.; Paul R.; Wijnberg L. (1992) Estimation of Carbon Monoxide Exposure and associated Carboxyhemoglobin levels in Denver Residents Using a Probabalistic verion of NEM, prepared by International Technology for U.S. EPA, Office of Air Quality Planning and Standards, Durham, NC, Contract No. 68–D0–0062.
Johnson T.; Mihlan G.; LaPointe J.; Fletcher K.; Capel J. (2000) Estimation of Carbon Monoxide Exposures and Associated Carboxyhemoglobin Levels for Residents of Denver and Los Angeles Using pNEM/CO (Version 2.1). Report prepared by ICF Consulting and TRJ Environmental, Inc., under EPA Contract No. 68–D6–0064. U.S. Environmental Protection Agency, Research Triangle Park, North Carolina. Available at: *http://www.epa.gov/ttn/fera/human_related.html.* June 2000.
Karner A.A.; Eisinger D.S.; Niemeier D.A. (2010) Near-Roadway Air Quality: Synthesizing the Findings from Real-World Data. Environ Sci Technol 44: 5334–5344.
Kaur S; Nieuwenhuijsen MJ (2009). Determinants of personal exposure to PM2.5, ultrafine particle counts, and CO in a transport microenvironment. Environ Sci Technol, 43: 4737–4743.
Kleinman M.T.; Davidson D.M.; Vandagriff R.B.; Caiozzo V.J.; Whittenberger J.L. (1989) Effects of short-term exposure to carbon monoxide in subjects with coronary artery disease. Arch. Environ. Health 44:361–369.
Kleinman M.T.; Leaf D.A.; Kelly E.; Caiozzo V.; Osann K.; O'Niell T. (1998) Urban angina in the mountains: Effects of carbon monoxide and mild hypoxemia on subjects with chronic stable angina. Arch. Environ. Health 53:388–397.
Koken P.J.M.; Piver W.T.; Ye F.; Elixhauser A.; Olsen L.M.; Portier C.J. (2003) Temperature, air pollution, and hospitalization for cardiovascular diseases among elderly people in Denver. Environ Health Perspect, 111:1312–1317.
Lippmann, M. (1984) CASAC Findings and Recommendations on the Scientific Basis for a Revised NAAQS for Carbon Monoxide. [Letter to W.D. Ruckelshous, EPA Administrator]. May 17.
Linn W.S.; Szlachcic Y.; Gong H. Jr; Kinney P.L.; Berhane K.T. (2000) Air pollution and daily hospital admissions in metropolitan Los Angeles. Environ Health Perspect, 108:427–434.
McClellan R.O. (1991) Letter from Dr. Roger McClellan, Chairman, Clean Air Scientific Advisory Committee, to William K. Reilly, EPA Administrator, July 17, 1991.
McClellan R.O. (1992) Letter from Dr. Roger McClellan, Chairman, Clean Air Scientific Advisory Committee, to William K. Reilly, EPA Administrator, August 1, 1992.
Mann J.K.; Tager I.B.; Lurmann F.; Segal M.; Quesenberry C.P. Jr; Lugg M.M.; Shan J.; Van den Eeden S.K. (2002) Air pollution and hospital admissions for ischemic heart disease in persons with congestive heart failure or arrhythmia. Environ Health Perspect, 110:1247–1252.
Metzger K.B.; Tolbert P.E.; Klein M.; Peel J.L.; Flanders W.D.; Todd K.H.; Mulholland J.A.; Ryan P.B.; Frumkin H. (2004) Ambient air pollution and cardiovascular emergency department visits. Epidemiology, 15:46–56.
National Research Council. (2003) Managing Carbon Monoxide Pollution in Meteorological and Topographical Problem Areas. The National Academies Press, Washington, D.C.
Peel J.L.; Metzger K.B.; Klein M.; Flanders W.D.; Mulholland J.A.; Tolbert P.E. (2007) Ambient air pollution and cardiovascular emergency department visits in potentially sensitive groups. Am J Epidemiol, 165:625–633.
Russell T. and Samet J. (2010) Letter to Administrator Johnson from Drs. Russell and Samet, Clean Air Scientific Advisory Committee. Subject: Review of the "Near-road Guidance Document—Outline" and "Near-road Monitoring Pilot Study Objectives and Approach" EPA–CASAC–11–001. November 24, 2010.
Sheps D.S.; Adams K.F. Jr.; Bromberg P.A.; Goldstein G.M.; O'Neil J.J.; Horstman D.; Koch G. (1987) Lack of effect of low levels of carboxyhemoglobin on cardiovascular function in patients with ischemic heart disease. Arch. Environ. Health 42:108–116.
Singer, B.C.; Kirchstetter, T.W.; Harley, R.A.; Kendall, G.R.; Hesson, J.M. (1999) A Fuel-Based Approach to Estimating Motor Vehicle Cold-Start Emissions. Air & Waste Manage. Assoc. 49:125–135.
Sinha A. and Toumi R. (1996) A comparison of climate forcings due to chlorofluorocarbons and carbon monoxide. Geophys Res Lett, 23: 65–68.
Symons J.M.; Wang L.; Guallar E.; Howell E.; Dominici F.; Schwab M.; Ange B.A.; Samet J.; Ondov J.; Harrison D.; Geyh A. (2006) A case-crossover study of fine particulate matter air pollution and onset of congestive heart failure symptom exacerbation leading to hospitalization. Am J Epidemiol, 164:421–433.
Tolbert P.E.; Klein M.; Peel J.L.; Sarnat S.E.; Sarnat J.A. (2007) Multipollutant modeling issues in a study of ambient air quality and emergency department visits in Atlanta. J Expo Sci Environ Epidemiol, 17:S29–S35.
U.S. Department of Health, Education and Welfare. (1970) Air Quality Criteria for Carbon Monoxide. National Air Pollution Control Administration, Public Health Service, Washington, DC.
U.S. Environmental Protection Agency. (1979a) Air Quality Criteria for Carbon Monoxide. Office of Health and Environmental Assessment, Environmental Criteria and Assessment Office, Research Triangle Park, NC. EPA–600/8–79–022.
U.S. Environmental Protection Agency. (1979b) Assessment of Adverse Health Effects from Carbon Monoxide and Implications for Possible Modifications of the Standard. Office of Air Quality Planning and Standards, Research Triangle Park, NC.
U.S. Environmental Protection Agency. (1984a) Revised Evaluation of Health Effects Associated with Carbon Monoxide Exposure: An Addendum to the 1979 EPA Air Quality Criteria Document for Carbon Monoxide. Office of Health and Environmental Assessment, Environmental Criteria and Assessment Office, Research Triangle Park, NC. EPA–600/8–83–033F
U.S. Environmental Protection Agency. (1984b) Review of the NAAQS for Carbon Monoxide: Reassessment of Scientific and Technical Information. Office of Air Quality Planning and Standards, Research Triangle Park. NC. EPA–450/584–904
U.S. Environmental Protection Agency. (1991) Air Quality Criteria for Carbon Monoxide. Office of Health and Environmental Assessment, Environmental Criteria and Assessment Office, Research Triangle Park, NC. EPA/600/8–90/045F. Available at: *http://www.epa.gov/ttn/naaqs/standards/co/s_co_pr.html*
U.S. Environmental Protection Agency. (1992) Review of the National Ambient Air Quality Standards for Carbon Monoxide: Assessment of Scientific and Technical Information, OAQPS Staff Paper. Office of Air Quality Planning and Standards, Research Triangle Park, NC. EPA/452/R–92–004.
U.S. Environmental Protection Agency. (2000) Air Quality Criteria for Carbon Monoxide. National Center for Environmental Assessment, Office of Research and Development, Research Triangle Park, NC. EPA/600/P–99/001F. Available at: *http://cfpub.epa.gov/ncea/cfm/recordisplay.cfm?deid=18163*
U.S. Environmental Protection Agency. (2005) Review of the National Ambient Air Quality Standards for Particulate Matter: Policy Assessment of Scientific and Technical Information, OAQPS Staff Paper. Office of Air Quality Planning and Standards, Research Triangle Park, NC. EPA–452/R–05–005a.
U.S. Environmental Protection Agency. (2007) Review of the National Ambient Air Quality Standards for Ozone: Policy Assessment of Scientific and Technical Information, OAQPS Staff Paper. Office of Air Quality Planning and Standards, Research Triangle Park, NC. EPA–452/R–07–007.
U.S. Environmental Protection Agency. (2008a) Draft Plan for Review of the National Ambient Air Quality Standards for Carbon Monoxide. Also known as Draft Integrated Review Plan. National Center for Environmental Assessment and Office of Air Quality Planning and Standards, Research Triangle Park, NC. EPA–452/D–

08–001. Available at: *http://www.epa.gov/ttn/naaqs/standards/co/s_co_cr_pd.html.*

U.S. Environmental Protection Agency. (2008b) Plan for Review of the National Ambient Air Quality Standards for Carbon Monoxide. *Also known as Integrated Review Plan.* National Center for Environmental Assessment and Office of Air Quality Planning and Standards, Research Triangle Park, NC. EPA–452/R–08–005. Available at: *http://www.epa.gov/ttn/naaqs/standards/co/s_co_cr_pd.html.*

U.S. Environmental Protection Agency. (2008c) Risk and Exposure Assessment to Support the Review of the $NO_2$ Primary National Ambient Air Quality Standard. Office of Air Quality Planning and Standards, Research Triangle Park, NC. EPA–452/R–08–008a.

U.S. Environmental Protection Agency. (2008d) Integrated Science Assessment for Oxides of Nitrogen—Health Criteria (Final Report). EPA/600/R–08/071.

U.S. Environmental Protection Agency. (2009a) Integrated Science Assessment for Carbon Monoxide, First External Review Draft. National Center for Environmental Assessment, Research Triangle Park, NC. EPA/600/R–00/019. Available at: *http://www.epa.gov/ttn/naaqs/standards/co/s_co_cr_isa.html*

U.S. Environmental Protection Agency. (2009b) Integrated Science Assessment for Carbon Monoxide, Second External Review Draft. National Center for Environmental Assessment, Research Triangle Park, NC. EPA/600/R–09/019B. Available at: *http://www.epa.gov/ttn/naaqs/standards/co/s_co_cr_isa.html*

U.S. Environmental Protection Agency. (2009c) Carbon Monoxide National Ambient Air Quality Standards: Scope and Methods Plan for Health Risk and Exposure Assessment. Draft. Office of Air Quality Planning and Standards, Research Triangle Park, NC. EPA–452/R–09–004. Available at: *http://www.epa.gov/ttn/naaqs/standards/co/s_co_cr_pd.html*

U.S. Environmental Protection Agency. (2009d) Risk and Exposure Assessment to Support the Review of the Carbon Monoxide Primary National Ambient Air Quality Standards, First External Review Draft. Office of Air Quality Planning and Standards, Research Triangle Park, NC. EPA–452/P–09–008. Available at: *http://www.epa.gov/ttn/naaqs/standards/co/s_co_cr_rea.html*

U.S. Environmental Protection Agency. (2009e) Risk and Exposure Assessment to Support the Review of the SO2 Primary National Ambient Air Quality Standard. Office of Air Quality Planning and Standards, Research Triangle Park, NC. EPA–452/R–09–007. August 2009. Available at *http://www.epa.gov/ttn/naaqs/standards/so2/data/200908SO2REAFinalReport.pdf.*

U.S. Environmental Protection Agency. (2009f) Integrated Science Assessment for Particulate Matter (Final Report). National Center for Environmental Assessment, Research Triangle Park, NC. EPA/600/R–08/139F.

U.S. Environmental Protection Agency. (2010a) Integrated Science Assessment for Carbon Monoxide. National Center for Environmental Assessment, Research Triangle Park, NC. EPA/600/R–09/019F. Available at: *http://www.epa.gov/ttn/naaqs/standards/co/s_co_cr_isa.html*

U.S. Environmental Protection Agency. (2010b) Quantitative Risk and Exposure Assessment for Carbon Monoxide—Amended. Office of Air Quality Planning and Standards, Research Triangle Park, NC. EPA–452/R–10–009. Available at: *http://www.epa.gov/ttn/naaqs/standards/co/s_co_cr_rea.html*

U.S. Environmental Protection Agency. (2010c) Policy Assessment for the Review of the Carbon Monoxide National Ambient Air Quality Standards. Office of Air Quality Planning and Standards, Research Triangle Park, NC. EPA 452/R–10–007. Available at: *http://www.epa.gov/ttn/naaqs/standards/co/s_co_cr_pa.html*

U.S. Environmental Protection Agency. (2010d) Risk and Exposure Assessment to Support the Review of the Carbon Monoxide Primary National Ambient Air Quality Standards, Second External Review Draft, U.S Environmental Protection Agency, Research Triangle Park, NC, report no. EPA–452/P–10–004. Available at: *http://www.epa.gov/ttn/naaqs/standards/co/s_co_cr_rea.html*

U.S. Environmental Protection Agency. (2010e) Policy Assessment for the Review of the Carbon Monoxide National Ambient Air Quality Standards, External Review Draft. Office of Air Quality Planning and Standards, Research Triangle Park, NC. EPA–452/P–10–005. Available at: *http://www.epa.gov/ttn/naaqs/standards/co/s_co_cr_pa.html*

U.S. Environmental Protection Agency. (2010f) Analyzer Use in U.S. Monitoring Networks. Spreadsheet of air monitoring method utilization in U.S. monitoring networks by year. Office of Air Quality Planning and Standards.

U.S. Environmental Protection Agency. (2010g) Modern CO Instrument Performance Data. Spreadsheet of performance data for existing FRM analyzers. Office of Research and Development.

Watkins N. and Thompson R. (2010) CO Monitoring Network Background and Review. Memorandum to the Carbon Monoxide NAAQS Review Docket. EPA–HQ–OAR–2008–0015.

Wellenius G.A.; Bateson T.F.; Mittleman M.A.; Schwartz J. (2005) Particulate air pollution and the rate of hospitalization for congestive heart failure among Medicare beneficiaries in Pittsburgh, Pennsylvania. Am J Epidemiol 161:1030–1036.

WHO (2008). Harmonization Project Document No. 6. Part 1: Guidance document on characterizing and communicating uncertainty in exposure assessment. Available at: *http://www.who.int/ipcs/methods/harmonization/areas/exposure/en/.*

Zanobetti A. and Schwartz J. (2001) Are diabetics more susceptible to the health effects of airborne particles? Am J Respir. Crit. Care Med. 164:831–833.

Zhou, Y and Levy J.I. (2007) Factors influencing the spatial extent of mobile source air pollution impacts: A meta-analysis. BMC Public Health, 7:89.

Zhu Y.; Hinds W.C.; Kim S.; Shen S.; Sioutas C. (2002) Study of ultrafine particles near a major highway with heavy-duty diesel traffic. Atmos Environ, 36: 4323–4335.

## List of Subjects

*40 CFR Part 50*

Environmental protection, Air pollution control, Carbon monoxide, Lead, Nitrogen dioxide, Ozone, Particulate matter, Sulfur oxides.

*40 CFR Part 53*

Environmental protection, Administrative practice and procedure, Air pollution control, Intergovernmental relations, Reporting and recordkeeping requirements.

*40 CFR Part 58*

Environmental protection, Administrative practice and procedure, Air pollution control, Intergovernmental relations, Reporting and recordkeeping requirements.

Dated: January 28, 2011.

**Lisa P. Jackson,**

*Administrator.*

For the reasons stated in the preamble, title 40, chapter I of the Code of Federal Regulations is proposed to be amended as follows:

## PART 50—NATIONAL PRIMARY AND SECONDARY AMBIENT AIR QUALITY STANDARDS

1. The authority citation for part 50 continues to read as follows:

**Authority:** 42 U.S.C. 7401, *et seq.*

2. Appendix C to Part 50 is revised to read as follows:

### Appendix C to Part 50—Measurement Principle and Calibration Procedure for the Measurement of Carbon Monoxide in the Atmosphere (Non-Dispersive Infrared Photometry)

### 1.0 Applicability

1.1 This non-dispersive infrared photometry (NDIR) Federal Reference Method (FRM) provides measurements of the concentration of carbon monoxide (CO) in ambient air for determining compliance with the primary and secondary National Ambient Air Quality Standards (NAAQS) for CO as specified in § 50.8 of this chapter. The method is applicable to continuous sampling and measurement of ambient CO concentrations suitable for determining 1-hour or longer average measurements. The method may also provide measurements of shorter averaging times, subject to specific analyzer performance limitations. Additional CO

monitoring quality assurance procedures and guidance are provided in part 58, appendix A, of this chapter and in reference 1 of this appendix C.

**2.0 Measurement Principle**

2.1 Measurements of CO in ambient air are based on automated measurement of the absorption of infrared radiation by CO in an ambient air sample drawn into an analyzer employing non-wavelength-dispersive, infrared photometry (NDIR method). Infrared energy from a source in the photometer is passed through a cell containing the air sample to be analyzed, and the quantitative absorption of energy by CO in the sample cell is measured by a suitable detector. The photometer is sensitized specifically to CO by employing CO gas in a filter cell in the optical path, which, when compared to a differential optical path without a CO filter cell, limits the measured absorption to one or more of the characteristic wavelengths at which CO strongly absorbs. However, to meet measurement performance requirements, various optical filters, reference cells, rotating gas filter cells, dual-beam configurations, moisture traps, or other means may also be used to further enhance sensitivity and stability of the photometer and to minimize potential measurement interference from water vapor, carbon dioxide ($CO_2$), or other species. Also, various schemes may be used to provide a suitable zero reference for the photometer, and optional automatic compensation may be provided for the actual pressure and temperature of the air sample in the measurement cell. The measured infrared absorption, converted to a digital reading or an electrical output signal, indicates the measured CO concentration.

2.2 The measurement system is calibrated by referencing the analyzer's CO measurements to CO concentration standards traceable to a National Institute of Standards and Technology (NIST) primary standard for CO, as described in the associated calibration procedure specified in section 4 of this reference method.

2.3 An analyzer implementing this measurement principle will be considered a reference method only if it has been designated as a reference method in accordance with part 53 of this chapter.

2.4 Sampling *considerations.* The use of a particle filter in the sample inlet line of a CO FRM analyzer is optional and left to the discretion of the user unless such a filter is specified or recommended by the analyzer manufacturer in the analyzer's associated operation or instruction manual.

**3.0 Interferences**

3.1 The NDIR measurement principle is potentially susceptible to interference from water vapor and $CO_2$, which have some infrared absorption at wavelengths in common with CO and normally exist in the atmosphere. Various instrumental techniques can be used to effectively minimize these interferences.

**4.0 Calibration Procedures**

4.1 *Principle.* Either of two methods may be selected for dynamic multipoint calibration of FRM CO analyzers, using test gases of accurately known CO concentrations obtained from one or more compressed gas cylinders certified as CO transfer standards:

4.1.1 Dilution *method:* A single certified standard cylinder of CO is quantitatively diluted as necessary with zero air to obtain the various calibration concentration standards needed.

4.1.2 Multiple-*cylinder method:* Multiple, individually certified standard cylinders of CO are used for each of the various calibration concentration standards needed.

4.1.3 Additional information on calibration may be found in Section 12 of reference 1.

4.2 Apparatus. The major components and typical configurations of the calibration systems for the two calibration methods are shown in Figures 1 and 2. Either system may be made up using common laboratory components, or it may be a commercially manufactured system. In either case, the principal components are as follows:

4.2.1 CO standard gas flow control and measurement devices (or a combined device) capable of regulating and maintaining the standard gas flow rate constant to within ± 2 percent and measuring the gas flow rate accurate to within ± 2 percent, properly calibrated to a NIST-traceable standard.

4.2.2 For the dilution method (Figure 1), dilution air flow control and measurement devices (or a combined device) capable of regulating and maintaining the air flow rate constant to within ± 2 percent and measuring the air flow rate accurate to within ± 2 percent, properly calibrated to a NIST-traceable standard.

4.2.3 Standard gas pressure regulator(s) for the standard CO cylinder(s), suitable for use with a high-pressure CO gas cylinder and having a non-reactive diaphragm and internal parts and a suitable delivery pressure.

4.2.4 Mixing chamber for the dilution method, of an inert material and of proper design to provide thorough mixing of CO standard gas and diluent air streams.

4.2.5 Output sampling manifold, constructed of an inert material and of sufficient diameter to ensure an insignificant pressure drop at the analyzer connection. The system must have a vent designed to ensure nearly atmospheric pressure at the analyzer connection port and to prevent ambient air from entering the manifold.

4.3 Reagents.

4.3.1 CO gas concentration transfer standard(s) of CO in air, containing an appropriate concentration of CO suitable for the selected operating range of the analyzer under calibration and traceable to a NIST standard reference material (SRM). If the CO analyzer has significant sensitivity to $CO_2$, the CO standard(s) should also contain 350 to 400 ppm $CO_2$ to replicate the typical $CO_2$ concentration in ambient air. However, if the zero air dilution ratio used for the dilution method is not less than 100:1 and the zero air contains ambient levels of $CO_2$, then the CO standard may be contained in nitrogen and need not contain $CO_2$.

4.3.2 For the dilution method, clean zero air, free of contaminants that could cause a detectable response on or a change in sensitivity of the CO analyzer. The zero air should contain < 0.1 ppm CO.

4.4 Procedure *Using the Dilution Method.*

4.4.1 Assemble or obtain a suitable dynamic dilution calibration system such as the one shown schematically in Figure 1. Generally, all calibration gases including zero air must be introduced into the sample inlet of the analyzer. However, if the analyzer has special, approved zero and span inlets and automatic valves to specifically allow introduction of calibration standards at near atmospheric pressure, such inlets may be used for calibration in lieu of the sample inlet. For specific operating instructions, refer to the manufacturer's manual.

4.4.2 Ensure that there are no leaks in the calibration system and that all flowmeters are properly and accurately calibrated, under the conditions of use, if appropriate, against a reliable volume or flow rate standard such as a soap-bubble meter or wet-test meter traceable to a NIST standard. All volumetric flow rates should be corrected to the same temperature and pressure such as 298.15 K (25 °C) and 760 mm Hg (101 kPa), using a correction formula such as the following:

$$F_c = F_m \frac{298.15 P_m}{760(T_m + 273.15)} \quad (1)$$

Where:

$F_c$ = corrected flow rate (L/min at 25 °C and 760 mm Hg),

$F_m$ = measured flow rate (at temperature $T_m$ and pressure $P_m$),

$P_m$ = measured pressure in mm Hg (absolute), and

$T_m$ = measured temperature in degrees Celsius.

4.4.3 Select the operating range of the CO analyzer to be calibrated.

4.4.4 Connect the inlet of the CO analyzer to the output-sampling manifold of the calibration system.

4.4.5 Adjust the calibration system to deliver zero air to the output manifold. The total air flow must exceed the total demand of the analyzer(s) connected to the output manifold to ensure that no ambient air is pulled into the manifold vent. Allow the analyzer to sample zero air until a stable response is obtained. After the response has stabilized, adjust the analyzer zero reading.

4.4.6 Adjust the zero air flow rate and the CO gas flow rate from the standard CO cylinder to provide a diluted CO concentration of approximately 80 percent of the measurement upper range limit (URL) of the operating range of the analyzer. The total air flow rate must exceed the total demand of the analyzer(s) connected to the output manifold to ensure that no ambient air is pulled into the manifold vent. The exact CO concentration is calculated from:

$$[CO]_{OUT} = \frac{[CO]_{STD} \times F_{CO}}{F_D + F_{CO}} \quad (2)$$

Where:

$[CO]_{OUT}$ = diluted CO concentration at the output manifold (ppm),

$[CO]_{STD}$ = concentration of the undiluted CO standard (ppm),

$F_{CO}$ = flow rate of the CO standard (L/min), and

$F_D$ = flow rate of the dilution air (L/min).

Sample this CO concentration until a stable response is obtained. Adjust the analyzer span control to obtain the desired analyzer response reading equivalent to the calculated standard concentration. If substantial adjustment of the analyzer span control is required, it may be necessary to recheck the zero and span adjustments by repeating steps 4.4.5 and 4.4.6. Record the CO concentration and the analyzer's final response.

4.4.7 Generate several additional concentrations (at least three evenly spaced points across the remaining scale are suggested to verify linearity) by decreasing $F_{CO}$ or increasing $F_D$. Be sure the total flow exceeds the analyzer's total flow demand. For each concentration generated, calculate the exact CO concentration using equation (2). Record the concentration and the analyzer's stable response for each concentration. Plot the analyzer responses (vertical or y-axis) versus the corresponding CO concentrations (horizontal or x-axis). Calculate the linear regression slope and intercept of the calibration curve and verify that no point deviates from this line by more than 2 percent of the highest concentration tested.

4.5 Procedure *Using the Multiple-Cylinder Method.* Use the procedure for the dilution method with the following changes:

4.5.1 Use a multi-cylinder, dynamic calibration system such as the typical one shown in Figure 2.

4.5.2 The flowmeter need not be accurately calibrated, provided the flow in the output manifold can be verified to exceed the analyzer's flow demand.

4.5.3 The various CO calibration concentrations required in Steps 4.4.5, 4.4.6, and 4.4.7 are obtained without dilution by selecting zero air or the appropriate certified standard cylinder.

4.6 Frequency *of Calibration.* The frequency of calibration, as well as the number of points necessary to establish the calibration curve and the frequency of other performance checking, will vary by analyzer. However, the minimum frequency, acceptance criteria, and subsequent actions are specified in reference 1, appendix D, "Measurement Quality Objectives and Validation Template for CO" (page 5 of 30). The user's quality control program should provide guidelines for initial establishment of these variables and for subsequent alteration as operational experience is accumulated. Manufacturers of CO analyzers should include in their instruction/operation manuals information and guidance as to these variables and on other matters of operation, calibration, routine maintenance, and quality control.

## 5.0 Reference

1. *QA Handbook for Air Pollution Measurement Systems—Volume II. Ambient Air Quality Monitoring Program.* U.S. EPA. EPA–454/B–08–003 (2008).

BILLING CODE 6560–50–P

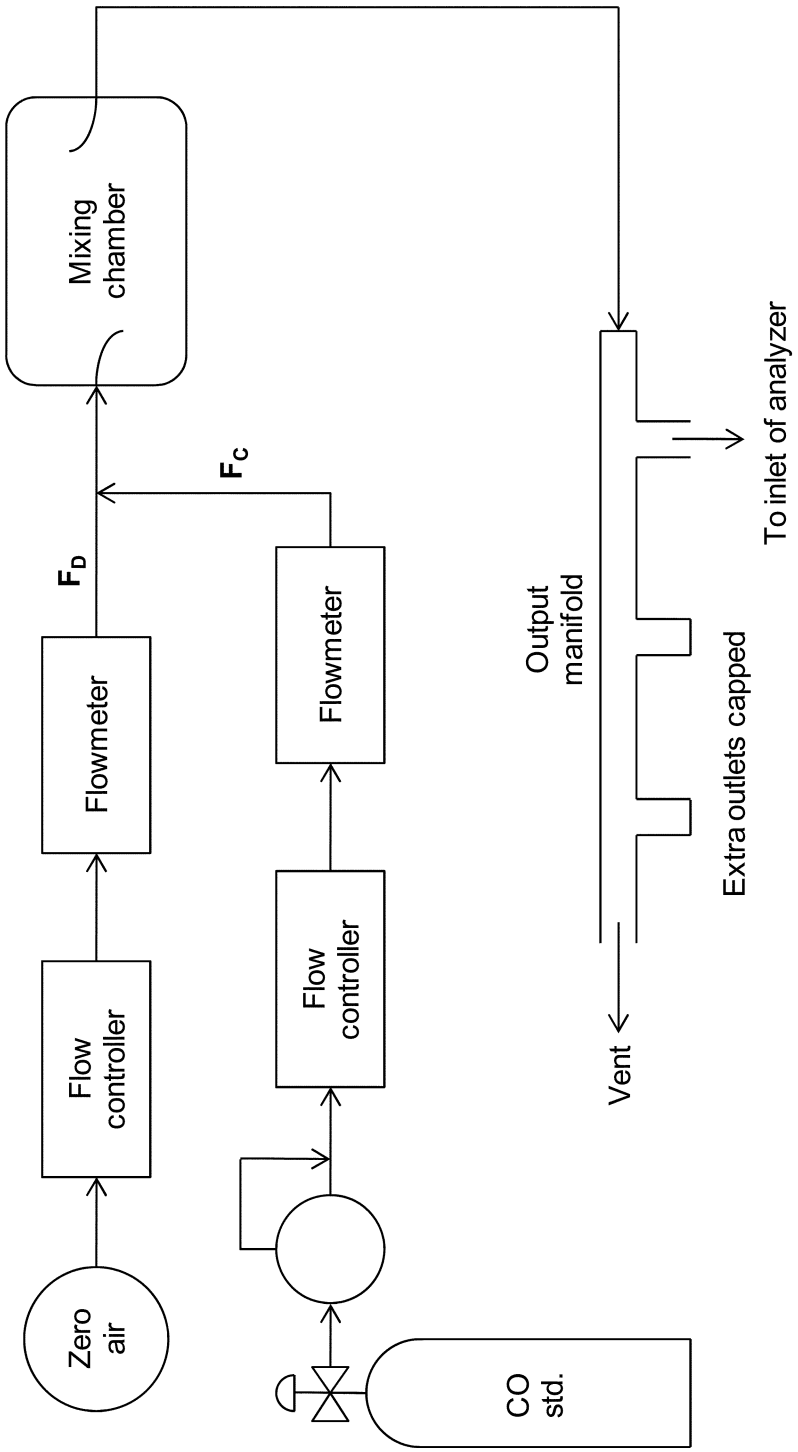


Figure 1. Dilution method for calibration of CO analyzers.

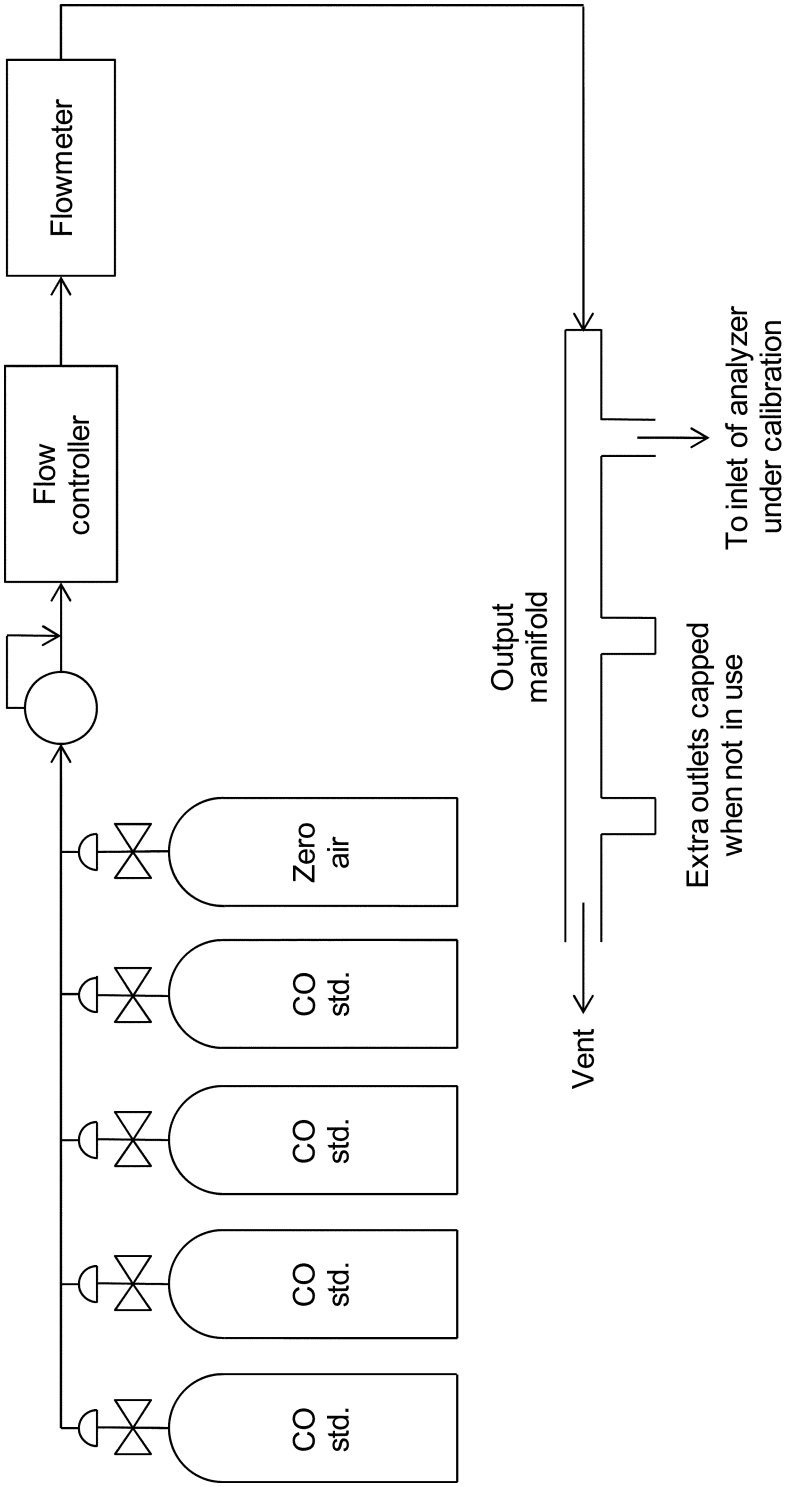


Figure 2. Multiple cylinder method for calibration of CO analyzers.

BILLING CODE 6560–50–C

## PART 53—AMBIENT AIR QUALITY REFERENCE AND EQUIVALENT METHODS

3. The authority citation for part 53 continues to read as follows:

**Authority:** 42 U.S.C. 7401, *et seq.*

4. Subpart B of Part 53 is revised to read as follows:

### Subpart B—Procedures for Testing Performance Characteristics of Automated Methods for $SO_2$, CO, $O_3$, and $NO_2$

Sec.
53.20 General provisions.
53.21 Test conditions.
53.22 Generation of test atmospheres.
53.23 Test procedure.
Appendix A to Subpart B—Optional Forms for Reporting Test Results

### Subpart B—Procedures for Testing Performance Characteristics of Automated Methods for $SO_2$, CO, $O_3$, and $NO_2$

#### § 53.20 General provisions.

(a) The test procedures given in this subpart shall be used to test the performance of candidate automated methods against the performance requirement specifications given in

table B–1. A test analyzer representative of the candidate automated method must exhibit performance better than, or not outside, the specified limit or limits for each such performance parameter specified (except range) to satisfy the requirements of this subpart. Except as provided in paragraph (b) of this section, the measurement range of the candidate method must be the standard range specified in table B–1 to satisfy the requirements of this subpart.

(b) *Measurement ranges.* For a candidate method having more than one selectable measurement range, one range must be the standard range specified in table B–1, and a test analyzer representative of the method must pass the tests required by this subpart while operated in that range.

(1) *Higher ranges.* The tests may be repeated for one or more higher (broader) ranges (*i.e.,* ranges extending to higher concentrations) than the standard range specified in table B–1, provided that the range does not extend to concentrations more than four times the upper range limit of the standard range specified in table B–1. For such higher ranges, only the tests for range (calibration), noise at 80% of the upper range limit, and lag, rise and fall time are required to be repeated. For the purpose of testing a higher range, the test procedure of § 53.23(e) may be abridged to include only those components needed to test lag, rise and fall time.

(2) *Lower ranges.* The tests may be repeated for one or more lower (narrower) ranges (*i.e.,* ones extending to lower concentrations) than the standard range specified in table B–1. For methods for some pollutants, table B–1 specifies special performance limit requirements for lower ranges. If special low-range performance limit requirements are not specified in table B–1, then the performance limit requirements for the standard range apply. For lower ranges for any method, only the tests for range (calibration), noise at 0% of the measurement range, lower detectable limit, (and nitric oxide interference for $SO_2$ UVF methods) are required to be repeated, provided the tests for the standard range shows the applicable limit specifications are met for the other test parameters.

(3) If the tests are conducted and passed only for the specified standard range, any FRM or FEM determination with respect to the method will be limited to that range. If the tests are passed for both the specified range and one or more higher or lower ranges, any such determination will include the additional higher or lower range(s) as well as the specified standard range. Appropriate test data shall be submitted for each range sought to be included in a FRM or FEM method determination under this paragraph (b).

(c) For each performance parameter (except range), the test procedure shall be initially repeated seven (7) times to yield 7 test results. Each result shall be compared with the corresponding performance limit specification in table B–1; a value higher than or outside the specified limit or limits constitutes a failure. These 7 results for each parameter shall be interpreted as follows:

(1) Zero (0) failures: The candidate method passes the test for the performance parameter.

(2) Three (3) or more failures: The candidate method fails the test for the performance parameter.

(3) One (1) or two (2) failures: Repeat the test procedures for the performance parameter eight (8) additional times yielding a total of fifteen (15) test results. The combined total of 15 test results shall then be interpreted as follows:

(i) One (1) or two (2) failures: The candidate method passes the test for the performance parameter.

(ii) Three (3) or more failures: The candidate method fails the test for the performance parameter.

(d) The tests for *zero drift, span drift, lag time, rise time, fall time,* and *precision* shall be carried out in a single integrated procedure conducted at various line voltages and ambient temperatures specified in § 53.23(e). A temperature-controlled environmental test chamber large enough to contain the test analyzer is recommended for this test. The tests for *noise, lower detectable limit,* and *interference equivalent* shall be conducted at any ambient temperature between 20 °C and 30 °C, at any normal line voltage between 105 and 125 volts, and shall be conducted such that not more than three (3) test results for each parameter are obtained in any 24-hour period.

(e) If necessary, all measurement response readings to be recorded shall be converted to concentration units or adjusted according to the calibration curve constructed in accordance with § 53.21(b).

(f) All recorder chart tracings (or equivalent data plots), records, test data and other documentation obtained from or pertinent to these tests shall be identified, dated, signed by the analyst performing the test, and submitted.

**Note to § 53.20:** Suggested formats for reporting the test results and calculations are provided in Figures B–2, B–3, B–4, B–5, and B–6 in appendix A to this subpart. Symbols and abbreviations used in this subpart are listed in table B–5 of appendix A to this subpart.

TABLE B–1—PERFORMANCE LIMIT SPECIFICATIONS FOR AUTOMATED METHODS

| Performance parameter | Units [1] | $SO_2$ | | $O_3$ (Std. range) | CO | | $NO_2$ (Std. range) | Definitions and test procedures |
|---|---|---|---|---|---|---|---|---|
| | | Std. range [3] | Lower range [2 3] | | Std. range [3] | Lower range [2 3] | | |
| 1. Range | ppm | 0–0.5 | < 0.5 | 0–0.5 | 0–50 | < 50 | 0–0.5 | Sec. 53.23(a). |
| 2. Noise | ppm | 0.001 | 0.0005 | 0.005 | 0.2 | 0.1 | 0.005 | Sec. 53.23(b). |
| 3. Lower detectable limit | ppm | 0.002 | 0.001 | 0.010 | 0.4 | 0.2 | 0.010 | Sec. 53.23(c). |
| 4. Interference equivalent: | | | | | | | | |
| Each interferent | ppm | ± 0.005 | [4] ± 0.005 | ± 0.02 | ± 1.0 | ± 0.5 | ± 0.02 | Sec. 53.23(d). |
| Total, all interferents | ppm | ..... | ..... | 0.06 | ..... | ..... | 0.04 | Sec. 53.23(d). |
| 5. Zero drift, 12 and 24 hour | ppm | ± 0.004 | ± 0.002 | ± 0.02 | ± 0.5 | ± 0.3 | ± 0.02 | Sec. 53.23(e). |
| 6. Span drift, 24 hour: | | | | | | | | |
| 20% of upper range limit | Percent | ..... | ± 3.0 | ± 20.0 | ..... | ± 2.0 | ± 20.0 | Sec. 53.23(e). |
| 80% of upper range limit | Percent | ± 3.0 | ..... | ± 5.0 | ± 2.0 | ..... | ± 5.0 | Sec. 53.23(e). |
| 7. Lag time | Minutes | 2 | 2 | 20 | 2.0 | 2.0 | 20 | Sec. 53.23(e). |
| 8. Rise time | Minutes | 2 | 2 | 15 | 2.0 | 2.0 | 15 | Sec. 53.23(e). |
| 9. Fall time | Minutes | 2 | 2 | 15 | 2.0 | 2.0 | 15 | Sec. 53.23(e). |
| 10. Precision: | | | | | | | | |
| 20% of upper range limit | ppm | ..... | ..... | 0.010 | ..... | ..... | 0.020 | Sec. 53.23(e). |
| | Percent | 2 | 2 | ..... | 1.0 | 1.0 | ..... | Sec. 53.23(e). |

TABLE B–1—PERFORMANCE LIMIT SPECIFICATIONS FOR AUTOMATED METHODS—Continued

| Performance parameter | Units [1] | $SO_2$ | | $O_3$ (Std. range) | CO | | $NO_2$ (Std. range) | Definitions and test procedures |
|---|---|---|---|---|---|---|---|---|
| | | Std. range [3] | Lower range [2 3] | | Std. range [3] | Lower range [2 3] | | |
| 80% of upper range limit | ppm | | | 0.010 | | | 0.030 | Sec. 53.23(e). |
| | Percent | 2 | 2 | | 1.0 | 1.0 | | Sec. 53.23(e). |

[1] To convert from parts per million (ppm) to μg/m³ at 25 °C and 760 mm Hg, multiply by M/0.02447, where M is the molecular weight of the gas. Percent means percent of the upper measurement range limit.

[2] Tests for interference equivalent and lag time do not need to be repeated for any lower range provided the test for the standard range shows that the lower range specification (if applicable) is met for each of these test parameters.

[3] For candidate analyzers having automatic or adaptive time constants or smoothing filters, describe their functional nature, and describe and conduct suitable tests to demonstrate their function aspects and verify that performances for calibration, noise, lag, rise, fall times, and precision are within specifications under all applicable conditions. For candidate analyzers with operator-selectable time constants or smoothing filters, conduct calibration, noise, lag, rise, fall times, and precision tests at the highest and lowest settings that are to be included in the FRM or FEM designation.

[4] For nitric oxide interference for the $SO_2$ UVF method, interference equivalent is ± 0.0003 ppm for the lower range.

**§ 53.21 Test conditions.**

(a) *Set-up and start-up* of the test analyzer shall be in strict accordance with the operating instructions specified in the manual referred to in § 53.4(b)(3). Allow adequate warm-up or stabilization time as indicated in the operating instructions before beginning the tests. The test procedures assume that the test analyzer has a conventional analog measurement signal output that is connected to a suitable strip chart recorder of the servo, null-balance type. This recorder shall have a chart width of a least 25 centimeters, chart speeds up to 10 cm per hour, a response time of 1 second or less, a deadband of not more than 0.25 percent of full scale, and capability either of reading measurements at least 5 percent below zero or of offsetting the zero by at least 5 percent. If the test analyzer does not have an analog signal output, or if a digital or other type of measurement data output is used for the tests, an alternative measurement data recording device (or devices) may be used for recording the test data, provided that the device is reasonably suited to the nature and purposes of the tests, and an analog representation of the analyzer measurements for each test can be plotted or otherwise generated that is reasonably similar to the analog measurement recordings that would be produced by a conventional chart recorder connected to a conventional analog signal output.

(b) *Calibration* of the test analyzer shall be carried out prior to conducting the tests described in this subpart. The calibration shall be as indicated in the manual referred to in § 53.4(b)(3) and as follows: If the chart recorder or alternative data recorder does not have below zero capability, adjust either the controls of the test analyzer or the chart or data recorder to obtain a + 5% offset zero reading on the recorder chart to facilitate observing negative response or drift. If the candidate method is not capable of negative response, the test analyzer (not the data recorder) shall be operated with a similar offset zero. Construct and submit a calibration curve showing a plot of recorder scale readings or other measurement output readings (vertical or y-axis) against pollutant concentrations presented to the analyzer for measurement (horizontal or x-axis). If applicable, a plot of base analog output units (volts, millivolts, milliamps, *etc.*) against pollutant concentrations shall also be obtained and submitted. All such calibration plots shall consist of at least seven (7) approximately equally spaced, identifiable points, including 0 and 90 ± 5 percent of the upper range limit (URL).

(c) Once the test analyzer has been set up and calibrated and the tests started, manual adjustment or normal periodic maintenance is permitted only every 3 days. Automatic adjustments which the test analyzer performs by itself are permitted at any time. The submitted records shall show clearly when any manual adjustment or periodic maintenance was made during the tests and describe the specific operations performed.

(d) If the test analyzer should malfunction during any of the performance tests, the tests for that parameter shall be repeated. A detailed explanation of the malfunction, remedial action taken, and whether recalibration was necessary (along with all pertinent records and charts) shall be submitted. If more than one malfunction occurs, all performance test procedures for all parameters shall be repeated.

(e) Tests for all performance parameters shall be completed on the same test analyzer; however, use of multiple test analyzers to accelerate testing is permissible for testing additional ranges of a multi-range candidate method.

**§ 53.22 Generation of test atmospheres.**

(a) Table B–2 specifies preferred methods for generating test atmospheres and suggested methods of verifying their concentrations. Only one means of establishing the concentration of a test atmosphere is normally required, provided that that means is adequately accurate and credible. If the method of generation can produce accurate, reproducible concentrations, verification is optional. If the method of generation is not reproducible or reasonably quantifiable, then establishment of the concentration by some credible verification method is required.

(b) The test atmosphere delivery system shall be designed and constructed so as not to significantly alter the test atmosphere composition or concentration during the period of the test. The system shall be vented to insure that test atmospheres are presented to the test analyzer at very nearly atmospheric pressure. The delivery system shall be fabricated from borosilicate glass, FEP Teflon, or other material that is inert with regard to the gas or gases to be used.

(c) The output of the test atmosphere generation system shall be sufficiently stable to obtain stable response readings from the test analyzer during the required tests. If a permeation device is used for generation of a test atmosphere, the device, as well as the air passing over it, shall be controlled to 0.1 °C.

(d) All diluent air shall be zero air free of contaminants likely to react with the test atmospheres or cause a detectable response on the test analyzer.

(e) The concentration of each test atmosphere used shall be quantitatively established and/or verified before or during each series of tests. Samples for verifying test concentrations shall be

collected from the test atmosphere delivery system as close as feasible to the sample intake port of the test analyzer.

(f) The accuracy of all flow measurements used to calculate test atmosphere concentrations shall be documented and referenced to a primary flow rate or volume standard (such as a spirometer, bubble meter, *etc.*). Any corrections shall be clearly shown. All flow measurements given in volume units shall be standardized to 25 °C. and 760 mm Hg.

(g) Schematic drawings, photos, descriptions, and other information showing complete procedural details of the test atmosphere generation, verification, and delivery system shall be provided. All pertinent calculations shall be clearly indicated.

TABLE B–2—TEST ATMOSPHERES

| Test gas | Generation | Verification |
|---|---|---|
| Ammonia | Permeation device. Similar to system described in references 1 and 2. | Indophenol method, reference 3. |
| Carbon dioxide | Cylinder of zero air or nitrogen containing $CO_2$ as required to obtain the concentration specified in table B–3. | Use NIST-certified standards whenever possible. If NIST standards are not available, obtain 2 standards from independent sources which agree within 2 percent, or obtain one standard and submit it to an independent laboratory for analysis, which must agree within 2 percent of the supplier's nominal analysis. |
| Carbon monoxide | Cylinder of zero air or nitrogen containing CO as required to obtain the concentration specified in table B–3. | Use an FRM CO analyzer as described in reference 8. |
| Ethane | Cylinder of zero air or nitrogen containing ethane as required to obtain the concentration specified in table B–3. | Gas chromatography, ASTM D2820, reference 10. Use NIST-traceable gaseous methane or propane standards for calibration. |
| Ethylene | Cylinder of pre-purified nitrogen containing ethylene as required to obtain the concentration specified in table B–3. | Do. |
| Hydrogen chloride | Cylinder [1] of pre-purified nitrogen containing approximately 100 ppm of gaseous HCl. Dilute with zero air to concentration specified in table B–3. | Collect samples in bubbler containing distilled water and analyze by the mercuric thiocyanate method, ASTM (D612), p. 29, reference 4. |
| Hydrogen sulfide | Permeation device system described in references 1 and 2 | Tentative method of analysis for $H_2S$ content of the atmosphere, p. 426, reference 5. |
| Methane | Cylinder of zero air containing methane as required to obtain the concentration specified in table B–3. | Gas chromatography ASTM D2820, reference 10. Use NIST-traceable methane standards for calibration. |
| Nitric oxide | Cylinder [1] of pre-purified nitrogen containing approximately 100 ppm NO. Dilute with zero air to required concentration. | Gas phase titration as described in reference 6, section 7.1. |
| Nitrogen dioxide | 1. Gas phase titration as described in reference 6 | 1. Use an FRM $NO_2$ analyzer calibrated with a gravimetrically calibrated permeation device. |
| | 2. Permeation device, similar to system described in reference 6. | 2. Use an FRM $NO_2$ analyzer calibrated by gas-phase titration as described in reference 6. |
| Ozone | Calibrated ozone generator as described in reference 9 | Use an FEM ozone analyzer calibrated as described in reference 9. |
| Sulfur dioxide | 1. Permeation device as described in references 1 and 2 | Use an $SO_2$ FRM or FEM analyzer as described in reference 7. |
| | 2. Dynamic dilution of a cylinder containing approximately 100 ppm $SO_2$ as described in Reference 7. | |
| Water | Pass zero air through distilled water at a fixed known temperature between 20° and 30° C such that the air stream becomes saturated. Dilute with zero air to concentration specified in table B–3. | Measure relative humidity by means of a dew-point indicator, calibrated electrolytic or piezo electric hygrometer, or wet/dry bulb thermometer. |
| Xylene | Cylinder of pre-purified nitrogen containing 100 ppm xylene. Dilute with zero air to concentration specified in table B–3. | Use NIST-certified standards whenever possible. If NIST standards are not available, obtain 2 standards from independent sources which agree within 2 percent, or obtain one standard and submit it to an independent laboratory for analysis, which must agree within 2 percent of the supplier's nominal analysis. |
| Zero air | 1. Ambient air purified by appropriate scrubbers or other devices such that it is free of contaminants likely to cause a detectable response on the analyzer. | |
| | 2. Cylinder of compressed zero air certified by the supplier or an independent laboratory to be free of contaminants likely to cause a detectable response on the analyzer. | |

[1] Use stainless steel pressure regulator dedicated to the pollutant measured.

Reference 1. O'Keefe, A. E., and Ortaman, G. C. "Primary Standards for Trace Gas Analysis," *Anal. Chem.* 38, 760 (1966).

Reference 2. Scaringelli, F. P., A. E. Rosenberg, E*, and Bell, J. P., "Primary Standards for Trace Gas Analysis." *Anal. Chem.* 42, 871 (1970).

Reference 3. "Tentative Method of Analysis for Ammonia in the Atmosphere (Indophenol Method)", *Health Lab Sciences,* vol. 10, No. 2, 115–118, April 1973.

Reference 4. 1973 Annual Book of ASTM Standards, American Society for Testing and Materials, 1916 Race St., Philadelphia, PA.

Reference 5. *Methods for Air Sampling and Analysis,* Intersociety Committee, 1972, American Public Health Association, 1015.

Reference 6. 40 CFR 50 Appendix F, "Measurement Principle and Calibration Principle for the Measurement of Nitrogen Dioxide in the Atmosphere (Gas Phase Chemiluminescence)."

Reference 7. 40 CFR 50 Appendix A–1, "Measurement Principle and Calibration Procedure for the Measurement of Sulfur Dioxide in the Atmosphere (Ultraviolet Fluorscence)."

Reference 8. 40 CFR 50 Appendix C, "Measurement Principle and Calibration Procedure for the Measurement of Carbon Monoxide in the Atmosphere" (Non-Dispersive Infrared Photometry)".

Reference 9. 40 CFR 50 Appendix D, "Measurement Principle and Calibration Procedure for the Measurement of Ozone in the Atmosphere".
Reference 10. "Standard Test Method for C, through C5 Hydrocarbons in the Atmosphere by Gas Chromatography", D 2820, 1987 Annual Book of Aston Standards, vol 11.03, American Society for Testing and Materials, 1916 Race St., Philadelphia, PA 19103.

**§ 53.23 Test procedures.**

(a) *Range*—(1) *Technical definition.* The nominal minimum and maximum concentrations that a method is capable of measuring.

**Note to § 53.23(a)(1):** The nominal range is given as the lower and upper range limits in concentration units, for example, 0–0.5 parts per million (ppm).

(2) *Test procedure.* Determine and submit a suitable calibration curve, as specified in § 53.21(b), showing the test analyzer's measurement response over at least 95 percent of the required or indicated measurement range.

**Note to § 53.23(a)(2):** A single calibration curve for each measurement range for which an FRM or FEM designation is sought will normally suffice.

(b) *Noise*—(1) *Technical definition.* Spontaneous, short duration deviations in measurements or measurement signal output, about the mean output, that are not caused by input concentration changes. Measurement noise is determined as the standard deviation of a series of measurements of a constant concentration about the mean and is expressed in concentration units.

(2) *Test procedure.* (i) Allow sufficient time for the test analyzer to warm up and stabilize. Determine measurement noise at each of two fixed concentrations, first using zero air and then a pollutant test gas concentration as indicated below. The noise limit specification in table B–1 shall apply to both of these tests.

(ii) For an analyzer with an analog signal output, connect an integrating-type digital meter (DM) suitable for the test analyzer's output and accurate to three significant digits, to determine the analyzer's measurement output signal.

**Note to § 53.23(b)(2):** Use of a chart recorder in addition to the DM is optional.

(iii) Measure zero air with the test analyzer for 60 minutes. During this 60-minute interval, record twenty-five (25) test analyzer concentration measurements or DM readings at 2-minute intervals. (*See* Figure B–2 in appendix A of this subpart.)

(iv) If applicable, convert each DM test reading to concentration units (ppm) or adjust the test readings (if necessary) by reference to the test analyzer's calibration curve as determined in § 53.21(b). Label and record the test measurements or converted DM readings as $r_1$, $r_2$, $r_3$ * * * $r_i$ * * * $r_{25}$.

(v) Calculate measurement noise as the standard deviation, *S,* as follows:

$$S = \sqrt{\frac{1}{24}\left[\sum_{i=1}^{25} r_i^2 - \frac{1}{25}\left(\sum_{i=1}^{25} r_i\right)^2\right]}$$

where *i* indicates the *i*-th test measurement or DM reading in ppm.

(vi) Let *S* at 0 ppm be identified as $S_0$; compare $S_0$ to the noise limit specification given in table B–1.

(vii) Repeat steps in Paragraphs (b)(2)(iii) through (v) of this section using a pollutant test atmosphere concentration of 80 ± 5 percent of the URL instead of zero air, and let *S* at 80 percent of the URL be identified as $S_{80}$. Compare $S_{80}$ to the noise limit specification given in table B–1 of this subpart.

(viii) Both $S_0$ and $S_{80}$ must be less than or equal to the table B–1 noise limit specification to pass the test for the noise parameter.

(c) *Lower detectable limit*—(1) *Technical definition.* The minimum pollutant concentration that produces a measurement or measurement output signal of at least twice the noise level.

(2) *Test procedure.* (i) Allow sufficient time for the test analyzer to warm up and stabilize. Measure zero air and record the stable measurement reading in ppm as $B_Z$. (*See* Figure B–3 in appendix A of this subpart.)

(ii) Generate and measure a pollutant test concentration equal to the value for the lower detectable limit specified in table B–1.

**Note to § 53.23(c)(2):** If necessary, the test concentration may be generated or verified at a higher concentration, then quantitatively and accurately diluted with zero air to the final required test concentration.

(iii) Record the test analyzer's stable measurement reading, in ppm, as $B_L$.

(iv) Determine the lower detectable limit (*LDL*) test result as $LDL = B_L - B_Z$. Compare this *LDL* value with the noise level, $S_0$, determined in § 53.23(b), for the 0 concentration test atmosphere. *LDL* must be equal to or higher than 2 × $S_0$ to pass this test.

*(d) Interference equivalent*—(1) *Technical definition.* Positive or negative measurement response caused by a substance other than the one being measured.

(2) *Test procedure.* The test analyzer shall be tested for all substances likely to cause a detectable response. The test analyzer shall be challenged, in turn, with each potential interfering agent (interferent) specified in table B–3. In the event that there are substances likely to cause a significant interference which have not been specified in table B–3, these substances shall also be tested, in a manner similar to that for the specified interferents, at a concentration substantially higher than that likely to be found in the ambient air. The interference may be either positive or negative, depending on whether the test analyzer's measurement response is increased or decreased by the presence of the interferent. Interference equivalents shall be determined by mixing each interferent, one at a time, with the pollutant at an interferent test concentration not lower than the test concentration specified in table B–3 (or as otherwise required for unlisted interferents), and comparing the test analyzer's measurement response to the response caused by the pollutant alone. Known gas-phase reactions that might occur between a listed interferent and the pollutant are designated by footnote 3 in table B–3. In these cases, the interference equivalent shall be determined without mixing with the pollutant.

(i) Allow sufficient time for warm-up and stabilization of the test analyzer.

(ii) For a candidate method using a prefilter or scrubber device based upon a chemical reaction to derive part of its specificity and which device requires periodic service or maintenance, the test analyzer shall be "conditioned" prior to conducting each interference test series. This requirement includes conditioning for the $NO_2$ converter in chemiluminescence $NO/NO_2/NO_X$ analyzers and for the ozone scrubber in UV-absorption ozone analyzers. Conditioning is as follows:

(A) Service or perform the indicated maintenance on the scrubber or prefilter device, as if it were due for such maintenance, as directed in the manual referred to in § 53.4(b)(3).

(B) Before testing for each potential interferent, allow the test analyzer to sample through the prefilter or scrubber device a test atmosphere containing the interferent at a concentration not lower than the value specified in table B–3 (or, for unlisted potential interferents, at a concentration substantially higher than likely to be found in ambient air). Sampling shall be at the normal flow rate and shall be continued for 6 continuous hours prior to the interference test series. Conditioning for all applicable interferents prior to any of

the interference tests is permissible. Also permissible is simultaneous conditioning with multiple interferents, provided no interferent reactions are likely to occur in the conditioning system.

(iii) Generate three test atmosphere streams as follows:

(A) Test atmosphere *P:* Pollutant test concentration.

(B) Test atmosphere *I:* Interferent test concentration.

(C) Test atmosphere *Z:* Zero air.

(iv) Adjust the individual flow rates and the pollutant or interferent generators for the three test atmospheres as follows:

(A) The flow rates of test atmospheres *I* and *Z* shall be equal.

(B) The concentration of the pollutant in test atmosphere *P* shall be adjusted such that when *P* is mixed (diluted) with either test atmosphere *I* or *Z,* the resulting concentration of pollutant shall be as specified in table B–3.

(C) The concentration of the interferent in test atmosphere *I* shall be adjusted such that when *I* is mixed (diluted) with test atmosphere *P,* the resulting concentration of interferent shall be not less than the value specified in table B–3 (or as otherwise required for unlisted potential interferents).

(D) To minimize concentration errors due to flow rate differences between *I* and *Z,* it is recommended that, when possible, the flow rate of *P* be from 10 to 20 times larger than the flow rates of *I* and *Z.*

(v) Mix test atmospheres *P* and *Z* by passing the total flow of both atmospheres through a (passive) mixing component to insure complete mixing of the gases.

(vi) Sample and measure the mixture of test atmospheres *P* and *Z* with the test analyzer. Allow for a stable measurement reading, and record the reading, in concentration units, as *R* (*see* Figure B–3).

(vii) Mix test atmospheres *P* and *I* by passing the total flow of both atmospheres through a (passive) mixing component to insure complete mixing of the gases.

(viii) Sample and measure this mixture of *P* and *I* with the test analyzer. Record the stable measurement reading, in concentration units, as $R_I$.

(ix) Calculate the interference equivalent (*IE*) test result as:

$$IE = R_I - R.$$

*IE* must be within the limits (inclusive) specified in table B–1 for each interferent tested to pass the interference equivalent test.

(x) Follow steps (iii) through (ix) of this section, in turn, to determine the interference equivalent for each listed interferent as well as for any other potential interferents identified.

(xi) For those potential interferents which cannot be mixed with the pollutant, as indicated by footnote (3) in table B–3, adjust the concentration of test atmosphere *I* to the specified value without being mixed or diluted by the pollutant test atmosphere. Determine *IE* as follows:

(A) Sample and measure test atmosphere *Z* (zero air). Allow for a stable measurement reading and record the reading, in concentration units, as *R.*

(B) Sample and measure the interferent test atmosphere *I.* If the test analyzer is not capable of negative readings, adjust the analyzer (not the recorder) to give an offset zero. Record the stable reading in concentration units as $R_I$, extrapolating the calibration curve, if necessary, to represent negative readings.

(C) Calculate $IE = R_I - R$. *IE* must be within the limits (inclusive) specified in table B–1 for each interferent tested to pass the interference equivalent test.

(xii) Sum the *absolute value* of all the individual interference equivalent test results. This sum must be equal to or less than the total interferent limit given in table B–1 to pass the test.

BILLING CODE 6560–50–P

TABLE B-3—INTERFERENT TEST CONCENTRATION,[1] PARTS PER MILLION

| Pollutant | Analyzer Type [2] | Hydrochloric acid | Ammonia | Hydrogen sulfide | Sulfur dioxide | Nitrogen dioxide | Nitric oxide | Carbon dioxide | Ethylene | Ozone | M-xylene | Water vapor | Carbon monoxide | Methane | Ethane | Naphthalene |
|---|---|---|---|---|---|---|---|---|---|---|---|---|---|---|---|---|
| $SO_2$ | Ultraviolet fluorescence | | | 0.1[5] | 0.14[4] | 0.5 | 0.5 | | | 0.5 | 0.2 | 20,000 | | | | 0.05[6] |
| $SO_2$ | Flame photometric | | | 0.01 | 0.14[4] | | | 750 | | | | 20,000[3] | 50 | | | |
| $SO_2$ | Gas chromatography | | | 0.1 | 0.14[4] | | | 750 | | | | 20,000[3] | 50 | | | |
| $SO_2$ | Spectrophotometric-wet chemical (pararosanaline) | 0.2 | 0.1 | 0.1 | 0.14[4] | 0.5 | | 750 | | 0.5 | | | | | | |
| $SO_2$ | Electrochemical | 0.2 | 0.1 | 0.1 | 0.14[4] | 0.5 | 0.5 | | 0.2 | 0.5 | | 20,000[3] | | | | |
| $SO_2$ | Conductivity | 0.2 | 0.1 | | 0.14[4] | 0.5 | | 750 | | | | | | | | |
| $SO_2$ | Spectrophotometric-gas phase, including DOAS | | | | 0.14[4] | 0.5 | | | | 0.5 | 0.2 | | | | | |
| $O_3$ | Chemiluminescent | | | 0.1[3] | | | | 750 | | 0.08[4] | | 20,000[3] | | | | |
| $O_3$ | Electrochemical | | 0.1[3] | | 0.5 | 0.5 | | | | 0.08[4] | | | | | | |
| $O_3$ | Spectrophotometric-wet chemical (potassium iodide) | | 0.1[3] | | 0.5 | 0.5 | 0.5[3] | | | 0.08[4] | | | | | | |
| $O_3$ | Spectrophotometric-gas phase, including ultraviolet absorption and DOAS) | | | | 0.5 | 0.5 | 0.5 | | | 0.08[4] | 0.02 | 20,000 | | | | |
| CO | Non-dispersive Infrared | | | | | | | 750 | | | | 20,000 | $10^4$ | | | |
| CO | Gas chromatography with flame ionization detector | | | | | | | | | | | 20,000 | $10^4$ | | 0.5 | |
| CO | Electrochemical | | | | | | 0.5 | | 0.2 | | | 20,000 | $10^4$ | | | |
| CO | Catalytic combustion-thermal detection | | 0.1 | | | | | 750 | 0.2 | | | 20,000 | $10^4$ | 5.0 | 0.5 | |
| CO | IR fluorescence | | | | | | | 750 | | | | 20,000 | $10^4$ | | 0.5 | |
| CO | Mercury replacement-UV photometric | | | | | | | | 0.2 | | | | $10^4$ | | 0.5 | |

TABLE B-3—INTERFERANT TEST CONCENTRATION,[1] PARTS PER MILLION (CONTINUED)

| Pollutant | Analyzer Type | Hydrochloric acid | Ammonia | Hydrogen sulfide | Sulfur dioxide | Nitrogen dioxide | Nitric oxide | Carbon dioxide | Ethylene | Ozone | M-xylene | Water vapor | Carbon monoxide | Methane | Ethane | Naphthalene |
|---|---|---|---|---|---|---|---|---|---|---|---|---|---|---|---|---|
| $NO_2$ | Chemiluminescent | | 0.1[3] | | 0.5 | 0.1[4] | 0.5 | | | | | 20,000 | | | | |
| $NO_2$ | Spectrophotometric-wet chemical (azo-dye reaction) | | | | 0.5 | 0.1[4] | 0.5 | 750 | | 0.5 | | | | | | |
| $NO_2$ | Electrochemical | 0.2 | 0.1[3] | | 0.5 | 0.1[4] | 0.5 | 750 | | 0.5 | | 20,000 | 50 | | | |
| $NO_2$ | Spectrophotometric-gas phase | | 0.1[3] | | 0.5 | 0.1[4] | 0.5 | | | 0.5 | | 20,000 | 50 | | | |

1. Concentrations of interferent listed must be prepared and controlled to ±10 percent of the stated value.
2. Analyzer types not listed will be considered by the Administrator as special cases.
3. Do not mix with the pollutant.
4. Concentration of pollutant used for test. These pollutant concentrations must be prepared to ±10 percent of the stated value.
5. If candidate method utilizes an elevated-temperature scrubber for removal of aromatic hydrocarbons, perform this interference test.
6. If naphthalene test concentration cannot be accurately quantified, remove the scrubber, use a test concentration that causes a full scale response, reattach the scrubber, and evaluate response for interference.

(e) *Zero drift, span drift, lag time, rise time, fall time, and precision*—(1) *Technical definitions*—(i) *Zero drift.* The change in measurement response to

BILLING CODE 6560–50–C

zero pollutant concentration over 12- and 24-hour periods of continuous unadjusted operation.

(ii) *Span drift.* The percent change in measurement response to an up-scale pollutant concentration over a 24-hour period of continuous unadjusted operation.

(iii) *Lag time.* The time interval between a step change in input concentration and the first observable corresponding change in measurement response.

(iv) *Rise time.* The time interval between initial measurement response and 95 percent of final response after a step increase in input concentration.

(v) *Fall time.* The time interval between initial measurement response and 95 percent of final response after a step decrease in input concentration.

(vi) *Precision.* Variation about the mean of repeated measurements of the same pollutant concentration, expressed as one standard deviation.

(2) Tests for these performance parameters shall be accomplished over a period of seven (7) or fifteen (15) test days. During this time, the line voltage supplied to the test analyzer and the ambient temperature surrounding the analyzer shall be changed from day to day, as required in paragraph(e)(4) of this section. One test result for each performance parameter shall be obtained each test day, for seven (7) or fifteen (15) test days, as determined from the test results of the first seven days. The tests for each test day are performed in a single integrated procedure.

(3) The 24-hour test day may begin at any clock hour. The first approximately 12 hours of each test day are required for testing 12-hour zero drift. Tests for the other parameters shall be conducted any time during the remaining 12 hours.

(4) Table B–4 of this section specifies the line voltage and room temperature to be used for each test day. The applicant may elect to specify a wider temperature range (minimum and maximum temperatures) than the range specified in table B–4 and to conduct these tests over that wider temperature range in lieu of the specified temperature range. If the test results show that all test parameters of this section § 53.23(e) are passed over this wider temperature range, a subsequent FRM or FEM designation for the candidate method based in part on this test shall indicate approval for operation of the method over such wider temperature range. The line voltage and temperature shall be changed to the specified values (or to the alternative, wider temperature values, if applicable) at the start of each test day (*i.e.,* at the start of the 12-hour zero test). Initial adjustments (day zero) shall be made at a line voltage of 115 volts (rms) and a room temperature of 25 °C.

(5) The tests shall be conducted in blocks consisting of 3 test days each until 7 (or 15, if necessary) test results have been obtained. (The final block may contain fewer than three test days.) Test days need not be contiguous days, but during any idle time between tests or test days, the test analyzer must operate continuously and measurements must be recorded continuously at a low chart speed (or equivalent data recording) and included with the test data. If a test is interrupted by an occurrence other than a malfunction of the test analyzer, only the block during which the interruption occurred shall be repeated.

(6) During each test block, manual adjustments to the electronics, gas, or reagent flows or periodic maintenance shall not be permitted. Automatic adjustments that the test analyzer performs by itself are permitted at any time.

(7) At least 4 hours prior to the start of the first test day of each test block, the test analyzer may be adjusted and/or serviced according to the periodic maintenance procedures specified in the manual referred to in § 53.4(b)(3). If a new block is to immediately follow a previous block, such adjustments or servicing may be done immediately after completion of the day's tests for the last day of the previous block and at the voltage and temperature specified for that day, but only on test days 3, 6, 9, and 12.

**Note to § 53.23(e)(7):** If necessary, the beginning of the test days succeeding such maintenance or adjustment may be delayed as required to complete the service or adjustment operation.

(8) All measurement response readings to be recorded shall be converted to concentration units or adjusted (if necessary) according to the calibration curve. Whenever a test atmosphere is to be measured but a stable reading is not required, the test atmosphere shall be sampled and measured long enough to cause a change in measurement response of at least 10% of full scale. Identify all readings and other pertinent data on the strip chart (or equivalent test data record). (*See* Figure B–1 illustrating the pattern of the required readings.)

TABLE B–4—LINE VOLTAGE AND ROOM TEMPERATURE TEST CONDITIONS

| Test day | Line voltage,[1] rms | Room temperature,[2] °C | Comments |
|---|---|---|---|
| 0 | 115 | 25 | Initial set-up and adjustments. |
| 1 | 125 | 20 | |
| 2 | 105 | 20 | |
| 3 | 125 | 30 | Adjustments and/or periodic maintenance permitted at end of tests. |
| 4 | 105 | 30 | |
| 5 | 125 | 20 | |
| 6 | 105 | 20 | Adjustments and/or periodic maintenance permitted at end of tests. |
| 7 | 125 | 30 | Examine test results to ascertain if further testing is required. |
| 8 | 105 | 30 | |
| 9 | 125 | 20 | Adjustments and/or periodic maintenance permitted at end of tests. |
| 10 | 105 | 20 | |
| 11 | 125 | 30 | |
| 12 | 105 | 30 | Adjustments and/or periodic maintenance permitted at end of tests. |
| 13 | 125 | 20 | |
| 14 | 105 | 20 | |
| 15 | 125 | 30 | |

[1] Voltage specified shall be controlled to ± 1 volt.
[2] Temperatures shall be controlled to ±1 °C.

BILLING CODE 6560–60–P

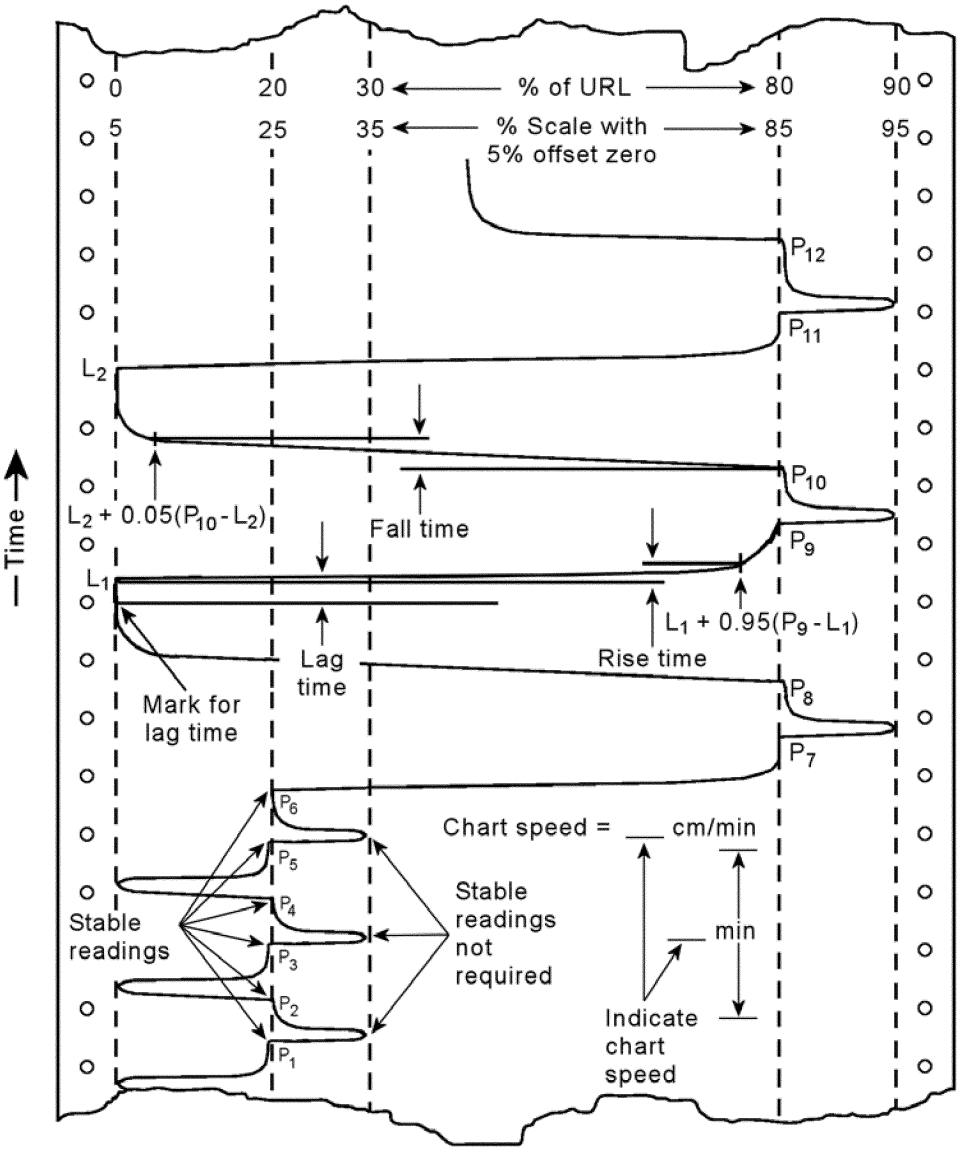


Figure B-1. Example showing the nature of the tracing obtained during the test sequence for 24-hour drift, lag time, rise time, fall time, and precision. The time scale has been greatly compressed.

BILLING CODE 6560–60–C

(9) *Test procedure.* (i) Arrange to generate pollutant test atmospheres as follows. Test atmospheres $A_0$, $A_{20}$, and $A_{80}$ shall be maintained consistent during the tests and reproducible from test day to test day.

| Test atmosphere | Pollutant concentration (percent) |
|---|---|
| $A_0$ ..... | Zero air. |
| $A_{20}$ ..... | 20±5 of the upper range limit. |
| $A_{30}$ ..... | 30±5 of the upper range limit. |
| $A_{80}$ ..... | 80±5 of the upper range limit. |
| $A_{90}$ ..... | 90±5 of the upper range limit. |

(ii) For steps within paragraphs (e)(9)(xxv) through (e)(9)(xxxi) of this section, a chart speed of at least 10 centimeters per hour (or equivalent resolution for a digital representation) shall be used to clearly show changes in measurement responses. The actual chart speed, chart speed changes, and time checks shall be clearly marked on the chart.

(iii) *Test day 0.* Allow sufficient time for the test analyzer to warm up and stabilize at a line voltage of 115 volts and a room temperature of 25 °C. Adjust the zero baseline to 5 percent of chart (*see* § 53.21(b)) and recalibrate, if necessary. No further adjustments shall be made to the analyzer until the end of the tests on the third, sixth, ninth, or twelfth test day.

(iv) Measure test atmosphere $A_0$ until a stable measurement reading is obtained and record this reading (in

ppm) as $Z'_n$, where $n = 0$ (*see* Figure B–4 in appendix A of this subpart).

(v) [Reserved]

(vi) Measure test atmosphere $A_{80}$. Allow for a stable measurement reading and record it as $S'_n$, where $n = 0$.

(vii) The above readings for $Z'_0$ and $S'_0$ should be taken at least four (4) hours prior to the beginning of test day 1.

(viii) At the beginning of each test day, adjust the line voltage and room temperature to the values given in table B–4 of this subpart (or to the corresponding alternative temperature if a wider temperature range is being tested).

(ix) Measure test atmosphere $A_0$ continuously for at least twelve (12) continuous hours during each test day.

(x) After the 12-hour zero drift test (step ix) is complete, sample test atmosphere $A_0$. A stable reading is not required.

(xi) Measure test atmosphere $A_{20}$ and record the stable reading (in ppm) as $P_1$. (*See* Figure B–4 in appendix A.)

(xii) Sample test atmosphere $A_{30}$; a stable reading is not required.

(xiii) Measure test atmosphere $A_{20}$ and record the stable reading as $P_2$.

(xiv) Sample test atmosphere $A_0$; a stable reading is not required.

(xv) Measure test atmosphere $A_{20}$ and record the stable reading as $P_3$.

(xvi) Sample test atmosphere $A_{30}$; a stable reading is not required.

(xvii) Measure test atmosphere $A_{20}$ and record the stable reading as $P_4$.

(xviii) Sample test atmosphere $A_0$; a stable reading is not required.

(xix) Measure test atmosphere $A_{20}$ and record the stable reading as $P_5$.

(xx) Sample test atmosphere $A_{30}$; a stable reading is not required.

(xxi) Measure test atmosphere $A_{20}$ and record the stable reading as $P_6$.

(xxii) Measure test atmosphere $A_{80}$ and record the stable reading as $P_7$.

(xxiii) Sample test atmosphere $A_{90}$; a stable reading is not required.

(xxiv) Measure test atmosphere $A_{80}$ and record the stable reading as $P_8$. Increase the chart speed to at least 10 centimeters per hour.

(xxv) Measure test atmosphere $A_0$. Record the stable reading as $L_1$.

(xxvi) Quickly switch the test analyzer to measure test atmosphere $A_{80}$ and mark the recorder chart to show, or otherwise record, the exact time when the switch occurred.

(xxvii) Measure test atmosphere $A_{80}$ and record the stable reading as $P_9$.

(xxviii) Sample test atmosphere $A_{90}$; a stable reading is not required.

(xxix) Measure test atmosphere $A_{80}$ and record the stable reading as $P_{10}$.

(xxx) Measure test atmosphere $A_0$ and record the stable reading as $L_2$.

(xxxi) Measure test atmosphere $A_{80}$ and record the stable reading as $P_{11}$.

(xxxii) Sample test atmosphere $A_{90}$; a stable reading is not required.

(xxxiii) Measure test atmosphere $A_{80}$ and record the stable reading as $P_{12}$.

(xxxiv) Repeat steps within paragraphs (e)(9)(viii) through (e)(9)(xxxiii) of this section, each test day.

(xxxv) If zero and span adjustments are made after the readings are taken on test days 3, 6, 9, or 12, complete all adjustments; then measure test atmospheres $A_0$ and $A_{80}$. Allow for a stable reading on each, and record the readings as $Z'_n$ and $S'_n$, respectively, where $n$ = the test day number (3, 6, 9, or 12). These readings must be made at least 4 hours prior to the start of the next test day.

(10) Determine the results of each day's tests as follows. Mark the recorder chart to show readings and determinations.

(i) *Zero drift.* (A) Determine the 12-hour zero drift by examining the strip chart pertaining to the 12-hour continuous zero air test. Determine the minimum ($C_{min.}$) and maximum ($C_{max.}$) measurement readings (in ppm) during this period of 12 consecutive hours, extrapolating the calibration curve to negative concentration units if necessary. Calculate the 12-hour zero drift (12*ZD*) as $12ZD = C_{max.} - C_{min}$. (*See* Figure B–5 in appendix A.)

(B) Calculate the 24-hour zero drift (24*ZD*) for the *n*-th test day as $24ZD_n = Z_n - Z_{n-1}$, or $24ZD_n = Z_n - Z'_{n-1}$ if zero adjustment was made on the previous test day, where $Z_n = \frac{1}{2}(L_1+L_2)$ for $L_1$ and $L_2$ taken on the *n*-th test day.

(C) Compare 12*ZD* and 24*ZD* to the zero drift limit specifications in table B–1. Both 12*ZD* and 24*ZD* must be within the specified limits (inclusive) to pass the test for zero drift.

(ii) *Span drift.*

(A) Calculate the span drift (*SD*) as:

$$SD_n = \frac{S_n - S_{n-1}}{S_{n-1}} \times 100\%$$

or if a span adjustment was made on the previous test day,

$$SD_n = \frac{S_n - S'_{n-1}}{S'_{n-1}} \times 100\%$$

where

$$S_n = \frac{1}{6}\sum_{i=7}^{12} P_i ,$$

*n* indicates the *n*-th test day, and *i* indicates the *i*-th measurement reading on the *n*-th test day.

(B) *SD* must be within the span drift limits (inclusive) specified in table B–1 to pass the test for span drift.

(iii) *Lag time.* Determine, from the strip chart (or alternative test data record), the elapsed time in minutes between the change in test concentration (or mark) made in step (xxvi) and the first observable (two times the noise level) measurement response. This time must be equal to or less than the lag time limit specified in table B–1 to pass the test for lag time.

(iv) *Rise time.* Calculate 95 percent of measurement reading $P_9$ and determine, from the recorder chart (or alternative test data record), the elapsed time between the first observable (two times noise level) measurement response and a response equal to 95 percent of the $P_9$ reading. This time must be equal to or less than the rise time limit specified in table B–1 to pass the test for rise time.

(v) *Fall time.* Calculate five percent of ($P_{10} - L_2$) and determine, from the strip chart (or alternative test record), the elapsed time in minutes between the first observable decrease in measurement response following reading $P_{10}$ and a response equal to $L_2$ + five percent of ($P_{10} - L_2$). This time must be equal to or less than the fall time limit specification in table B–1 to pass the test for fall time.

(vi) *Precision.* Calculate precision (both $P_{20}$ and $P_{80}$) for each test day as follows:

(A)

$$P_{20} = \frac{1}{URL}\sqrt{\frac{1}{5}\left[\sum_{i=1}^{6} P_i^2 - \frac{1}{6}\left(\sum_{i=1}^{6} P_i\right)^2\right]} \times 100\%$$

(B)

$$P_{80} = \frac{1}{URL}\sqrt{\frac{1}{5}\left[\sum_{i=7}^{12} P_i^2 - \frac{1}{6}\left(\sum_{i=7}^{12} P_i\right)^2\right]} \times 100\%$$

(C) Both $P_{20}$ and $P_{80}$ must be equal to or less than the precision limits specified in table B–1 to pass the test for precision.

TABLE B–5—SYMBOLS AND ABBREVIATIONS

| | |
|---|---|
| $B_L$ ..... | Analyzer reading at the specified *LDL* test concentration for the *LDL* test. |
| $B_z$ ..... | Analyzer reading at 0 concentration for the *LDL* test. |
| DM ..... | Digital meter. |
| $C_{max.}$ ... | Maximum analyzer reading during the 12*ZD* test period. |
| $C_{min.}$ .... | Minimum analyzer reading during the 12*ZD* test period. |
| *i* ..... | Subscript indicating the *i*-th quantity in a series. |
| *IE* ..... | Interference equivalent. |
| $L_1$ ..... | First analyzer zero reading for the 24*ZD* test. |

TABLE B–5—SYMBOLS AND ABBREVIATIONS—Continued

| | |
|---|---|
| $L_2$ | Second analyzer zero reading for the 24*ZD* test. |
| *n* | Subscript indicating the test day number. |
| *P* | Analyzer reading for the span drift and precision tests. |
| $P_i$ | The *i*-th analyzer reading for the span drift and precision tests. |
| $P_{20}$ | Precision at 20 percent of URL. |
| $P_{80}$ | Precision at 80 percent of URL. |
| ppb | Parts per billion of pollutant gas (usually in air), by volume. |
| ppm | Parts per million of pollutant gas (usually in air), by volume. |
| *R* | Analyzer reading of pollutant alone for the *IE* test. |

TABLE B–5—SYMBOLS AND ABBREVIATIONS—Continued

| | |
|---|---|
| $R_I$ | Analyzer reading with interferent added for the *IE* test. |
| $r_i$ | The *i*-th analyzer or DM reading for the noise test. |
| *S* | Standard deviation of the noise test readings. |
| $S_0$ | Noise value (*S*) measured at 0 concentration. |
| $S_{80}$ | Noise value (*S*) measured at 80 percent of the URL. |
| $S_n$ | Average of $P_7$ * * * $P_{12}$ for the n-th test day of the SD test. |
| $S'_n$ | Adjusted span reading on the *n*-th test day. |
| SD | Span drift |
| *URL* | Upper range limit of the analyzer's measurement range. |

TABLE B–5—SYMBOLS AND ABBREVIATIONS—Continued

| | |
|---|---|
| *Z* | Average of $L_1$ and $L_2$ readings for the 24ZD test. |
| $Z_n$ | Average of $L_1$ and $L_2$ readings on the *n*-th test day for the 24ZD test. |
| $Z'_n$ | Adjusted analyzer zero reading on the *n*-th test day for the 24ZD test. |
| *ZD* | Zero drift. |
| 12*ZD* | 12-hour zero drift. |
| 24*ZD* | 24-hour zero drift. |

## Appendix A to Subpart B of Part 53—Optional Forms for Reporting Test Results

BILLING CODE 6560–50–P

**NOISE TEST DATA**

Applicant _____ Date _____

Analyzer _____ Pollutant _____

Range _____ Test No. _____

| READING NUMBER (i) | TIME | 0% of URL | | 80% of URL | |
|---|---|---|---|---|---|
| | | DM READING | $r_i$, ppm | DM READING | $r_i$, ppm |
| 1 | | | | | |
| 2 | | | | | |
| 3 | | | | | |
| 4 | | | | | |
| 5 | | | | | |
| 6 | | | | | |
| 7 | | | | | |
| 8 | | | | | |
| 9 | | | | | |
| 10 | | | | | |
| 11 | | | | | |
| 12 | | | | | |
| 13 | | | | | |
| 14 | | | | | |
| 15 | | | | | |
| 16 | | | | | |
| 17 | | | | | |
| 18 | | | | | |
| 19 | | | | | |
| 20 | | | | | |
| 21 | | | | | |
| 22 | | | | | |
| 23 | | | | | |
| 24 | | | | | |
| 25 | | | | | |
| STD. DEVIATION | | $S_0$ = | | $S_{80}$ = | |

Figure B-2. Form for noise test data (see §53.23(b)).

**LDL and INTERFERENCE TEST DATA**

Applicant _____ Date _____

Analyzer _____ Pollutant _____

| TEST PARAMETER | | READING or CALCULATION | TEST NUMBER | | | | | | | | | | | | | | |
|---|---|---|---|---|---|---|---|---|---|---|---|---|---|---|---|---|---|
| | | | 1 | 2 | 3 | 4 | 5 | 6 | 7 | 8 | 9 | 10 | 11 | 12 | 13 | 14 | 15 |
| LOWER DETECTABLE LIMIT | | $B_Z$ | | | | | | | | | | | | | | | |
| | | $B_L$ | | | | | | | | | | | | | | | |
| | | $LDL = B_L$ □ $B_Z$ | | | | | | | | | | | | | | | |
| INTER-FERENCE EQUIV-ALENT | 1 | $R_1$ | | | | | | | | | | | | | | | |
| | | $R_{I1}$ | | | | | | | | | | | | | | | |
| | | $IE = R_{I1} - R_1$ | | | | | | | | | | | | | | | |
| | 2 | $R_2$ | | | | | | | | | | | | | | | |
| | | $R_{I2}$ | | | | | | | | | | | | | | | |
| | | $IE = R_{I2} - R_2$ | | | | | | | | | | | | | | | |
| | 3* | $R_3$ | | | | | | | | | | | | | | | |
| | | $R_{I3}$ | | | | | | | | | | | | | | | |
| | | $IE = R_{I3} - R_3$ | | | | | | | | | | | | | | | |
| | 4* | $R_4$ | | | | | | | | | | | | | | | |
| | | $R_{I4}$ | | | | | | | | | | | | | | | |
| | | $IE = R_{I4} - R_4$ | | | | | | | | | | | | | | | |
| | 5* | $R_5$ | | | | | | | | | | | | | | | |
| | | $R_{I5}$ | | | | | | | | | | | | | | | |
| | | $IE = R_{I5} - R_5$ | | | | | | | | | | | | | | | |
| | TOTAL* | $\sum_{i=1}^{n} \lvert IE_i \rvert$ | | | | | | | | | | | | | | | |

*If required.

Figure B-3. Form for test data and calculations for lower detectable limit (LDL) and interference equivalent (IE) (see § 53.23(c) and (d)).

**DRIFT AND PRECISION TEST DATA**

Applicant _____ Date _____

Analyzer _____ Pollutant _____

| | ANALYZER READING, ppm | | | | | | | | | | | | | | | |
|---|---|---|---|---|---|---|---|---|---|---|---|---|---|---|---|---|
| TEST DAY | 0 | 1 | 2 | 3 | 4 | 5 | 6 | 7 | 8 | 9 | 10 | 11 | 12 | 13 | 14 | 15 |
| DATE | | | | | | | | | | | | | | | | |
| $P_1$ | | | | | | | | | | | | | | | | |
| $P_2$ | | | | | | | | | | | | | | | | |
| $P_3$ | | | | | | | | | | | | | | | | |
| $P_4$ | | | | | | | | | | | | | | | | |
| $P_5$ | | | | | | | | | | | | | | | | |
| $P_6$ | | | | | | | | | | | | | | | | |
| $P_7$ | | | | | | | | | | | | | | | | |
| $P_8$ | | | | | | | | | | | | | | | | |
| $P_9$ | | | | | | | | | | | | | | | | |
| $P_{10}$ | | | | | | | | | | | | | | | | |
| $P_{11}$ | | | | | | | | | | | | | | | | |
| $P_{12}$ | | | | | | | | | | | | | | | | |
| $S_n = \frac{1}{6}\sum_{i=7}^{12} P_i$ | | | | | | | | | | | | | | | | |
| $L_1$ | | | | | | | | | | | | | | | | |
| $L_2$ | | | | | | | | | | | | | | | | |
| $Z'_n$ | | | | | | | | | | | | | | | | |
| $S'_n$ | | | | | | | | | | | | | | | | |
| $C_{max}$ | | | | | | | | | | | | | | | | |
| $C_{min}$ | | | | | | | | | | | | | | | | |

Figure B-4. Form for drift and precision test data (see § 53.23(e)).

**CALCULATION OF ZERO DRIFT, SPAN DRIFT, AND PRECISION**

Applicant _____ Date _____

Analyzer _____ Pollutant _____

| TEST PARAMETER | | CALCULATION | TEST DAY (n) | | | | | | | | | | | | | | |
|---|---|---|---|---|---|---|---|---|---|---|---|---|---|---|---|---|---|
| | | | 1 | 2 | 3 | 4 | 5 | 6 | 7 | 8 | 9 | 10 | 11 | 12 | 13 | 14 | 15 |
| ZERO DRIFT | 12 HOUR | $12ZD = C_{max} - C_{min}$ | | | | | | | | | | | | | | | |
| | 24 HOUR | $Z = (L_1 + L_2)/2$ | | | | | | | | | | | | | | | |
| | | $24ZD = Z_n - Z_{n-1}$ | | | | | | | | | | | | | | | |
| | | $24ZD = Z'_n - Z'_{n-1}$ | | | | | | | | | | | | | | | |
| SPAN DRIFT | 24 HOUR | $S_n = \frac{1}{6}\sum_{i=7}^{12} P_i$ | | | | | | | | | | | | | | | |
| | | $SD_n = \frac{S_n - S_{n-1}}{S_{n-1}} \times 100\%$ | | | | | | | | | | | | | | | |
| | | $SD_n = \frac{S_n - S'_{n-1}}{S'_{n-1}} \times 100\%$ | | | | | | | | | | | | | | | |
| PREC-ISION | 20% URL ($P_{20}$) | $P_{20}$ = STANDARD DEVIATION of ($P_1 \ldots P_6$) | | | | | | | | | | | | | | | |
| | 80% URL ($P_{80}$) | $P_{80}$ = STANDARD DEVIATION of ($P_7 \ldots P_{12}$) | | | | | | | | | | | | | | | |

Figure B-5. Form for calculating zero drift, span drift, and precision (§ 53.23(e)).

**TEST DATA SUMMARY**

Applicant _____ Analyst _____

Analyzer _____ Pollutant _____

Range _____ Other information _____
Test dates _____

| Performance Parameter | | Table B-1 Spec. | Test Number (first set) | | | | | | | Test Number (second set) | | | | | | | | Number of Failures | Pass or Fail |
|---|---|---|---|---|---|---|---|---|---|---|---|---|---|---|---|---|---|---|---|
| | | | 1 | 2 | 3 | 4 | 5 | 6 | 7 | 8 | 9 | 10 | 11 | 12 | 13 | 14 | 15 | | |
| **Noise**, ppm | 0% URL | | | | | | | | | | | | | | | | | | |
| | 80% URL | | | | | | | | | | | | | | | | | | |
| **LDL** (> 2 x 0% noise) | | | | | | | | | | | | | | | | | | | |
| **Interference Equivalent,** ppm | IE1 | | | | | | | | | | | | | | | | | | |
| | IE2 | | | | | | | | | | | | | | | | | | |
| | IE3 | | | | | | | | | | | | | | | | | | |
| | IE4 | | | | | | | | | | | | | | | | | | |
| | IE5 | | | | | | | | | | | | | | | | | | |
| | IE6 | | | | | | | | | | | | | | | | | | |
| | Total | | | | | | | | | | | | | | | | | | |
| **Zero Drift,** ppm | 12 hr | | | | | | | | | | | | | | | | | | |
| | 24 hr. | | | | | | | | | | | | | | | | | | |
| **Span Drift**, % | 80% URL | | | | | | | | | | | | | | | | | | |
| **Lag Time**, min | | | | | | | | | | | | | | | | | | | |
| **Rise Time**, min | | | | | | | | | | | | | | | | | | | |
| **Fall Time**, min | | | | | | | | | | | | | | | | | | | |
| **Precision,** percent | 20% URL | | | | | | | | | | | | | | | | | | |
| | 80% URL | | | | | | | | | | | | | | | | | | |

Figure B-6. Form for reporting a summary of the test results (see § 53.23).

BILLING CODE 6560–50–C

## PART 58—AMBIENT AIR QUALITY SURVEILLANCE

5. The authority citation for part 58 continues to read as follows:

**Authority:** 42 U.S.C. 7403, 7410, 7601(a), 7611, and 7619.

### Subpart B—[Amended]

6. Section 58.10, is amended by adding paragraph (a)(7) to read as follows:

**§ 58.10 Annual monitoring network plan and periodic network assessment.**

(a) * * *

(7) A plan for establishing CO monitoring sites in accordance with the requirements of appendix D to this part shall be submitted to the Administrator by July 1, 2012. The plan shall provide for all required monitoring stations to be operational by January 1, 2013.

* * * * *

7. Section 58.13 is amended by adding paragraph (e) to read as follows:

**§ 58.13 Monitoring network completion.**

* * * * *

(e) The network of CO monitors must be physically established no later than January 1, 2013, and at that time, must be operating under all of the requirements of this part, including the requirements of appendices A, C, D, and E to this part.

8. Appendix D to Part 58 is amended by revising section 4.2 to read as follows:

**Appendix D to Part 58—Network Design Criteria for Ambient Air Quality Monitoring**

* * * * *

4.2 Carbon Monoxide (CO) Design Criteria.

4.2.1 General Requirements. (a) One CO monitor is required to operate co-located with any required near-road $NO_2$ monitor, as required in Section 4.3.2 of this part, in CBSAs having a population of 1,000,000 or more persons. Continued operation of existing, but non-required SLAMS CO sites using an FRM or FEM is required until discontinuation is approved by the EPA Regional Administrator, per section § 58.14 of this part.

4.2.2 Regional Administrator Required Monitoring.

(a) The Regional Administrators, in collaboration with states, may require additional CO monitors above the minimum number of monitors required in 4.2.1 of this part, where the minimum monitoring requirements are not sufficient to meet monitoring objectives. The Regional Administrator may require, at his/her discretion, additional monitors in situations where data or other information suggest that CO concentrations may be approaching or exceeding the NAAQS. Such situations include, but are not limited to, (1) Characterizing impacts on ground-level concentrations due to stationary CO sources, (2) characterizing CO concentrations in urban downtown areas or urban street canyons, and (3) characterizing CO concentrations in areas that are subject to high ground level CO concentrations particularly due or enhanced by topographical and meteorological impacts.

(b) The Regional Administrator and the responsible State or local air monitoring agency should work together to design and/or maintain the most appropriate CO network to address the data needs for an area, and include all monitors under this provision in the annual monitoring network plan.

4.2.3 CO Monitoring Spatial Scales. (a) Microscale and middle scale measurements are the most useful site classifications for CO monitoring sites since most people have the potential for exposure on these scales. Carbon monoxide maxima occur primarily in areas near major roadways and intersections with high traffic density and often in areas with poor atmospheric ventilation.

(1) *Microscale*—Microscale measurements typically represent areas in close proximity to major roadways, within street canyons, over sidewalks, and in some cases, point and area sources. Emissions from roadways result in high ground level CO concentrations at the microscale, where concentration gradients generally exhibit a marked decrease with increasing downwind distance from major roads, or within urban downtown areas including urban street canyons. Emissions from stationary point and area sources, and non-road sources may, under certain plume conditions, result in high ground level concentrations at the microscale.

(2) *Middle scale*—Middle scale measurements are intended to represent areas with dimensions from 100 meters to 0.5 kilometer. In certain cases, middle scale measurements may apply to areas that have a total length of several kilometers, such as "line" emission source areas. This type of emission sources areas would include air quality along a commercially developed street or shopping plaza, freeway corridors, parking lots and feeder streets.

* * * * *

9. Appendix E to Part 58 is amended by revising sections 2 and 6.2(a), 6.2(b), 6.2(c), and Table E–4 to read as follows:

## Appendix E to Part 58—Probe and Monitoring Path Siting Criteria for Ambient Air Quality Monitoring

* * * * *

2. Horizontal and Vertical Placement

The probe or at least 80 percent of the monitoring path must be located between 2 and 15 meters above ground level for all ozone and sulfur dioxide monitoring sites, and for neighborhood or larger spatial scale Pb, $PM_{10}$, $PM_{10-2.5}$, $PM_{2.5}$, $NO_2$, and carbon monoxide sites. Middle scale $PM_{10-2.5}$ sites are required to have sampler inlets between 2 and 7 meters above ground level. Microscale Pb, $PM_{10}$, $PM_{10-2.5}$, and $PM_{2.5}$ sites are required to have sampler inlets between 2 and 7 meters above ground level. Microscale near-road $NO_2$ monitoring sites are required to have sampler inlets between 2 and 7 meters above ground level. The inlet probes for microscale carbon monoxide monitors that are being used to measure concentrations near roadways must be between 2 and 7 meters above ground level. The probe or at least 90 percent of the monitoring path must be at least 1 meter vertically or horizontally away from any supporting structure, walls, parapets, penthouses, *etc.,* and away from dusty or dirty areas. If the probe or a significant portion of the monitoring path is located near the side of a building or wall, then it should be located on the windward side of the building relative to the prevailing wind direction during the season of highest concentration potential for the pollutant being measured.

* * * * *

6. * * *

6.2 Spacing for Carbon Monoxide Probes and Monitoring Paths. (a) Near-road or urban street canyon CO monitoring microscale sites are intended to provide a measurement of the influence of the immediate source on the pollution exposure on the adjacent area. In order to provide some reasonable consistency and comparability in the air quality data from microscale sites, the CO monitor probe shall be as near as practicable to the outside nearest edge of the traffic lanes of the target road segment; but shall not be located at a distance greater than 50 meters, in the horizontal, from the outside nearest edge of the traffic lanes of the target road segment.

(b) Downtown urban area or urban street canyon (microscale) CO monitor inlet probes must be located at least 10 meters from an intersection and preferably at a midblock location. Midblock locations are preferable to intersection locations because intersections represent a much smaller portion of downtown space than do the streets between them. Pedestrian exposure is probably also greater in street canyon/corridors than at intersections.

(c) In determining the minimum separation between a neighborhood scale monitoring site and a specific roadway, the presumption is made that measurements should not be substantially influenced by any one roadway. Computations were made to determine the separation distance, and Table E–2 of this appendix provides the required minimum separation distance between roadways and a probe or 90 percent of a monitoring path. Probes or monitoring paths that are located closer to roads than this criterion allows should not be classified as neighborhood scale, since the measurements from such a site would closely represent the middle scale. Therefore, sites not meeting this criterion should be classified as middle scale.

* * * * *

TABLE E–4 OF APPENDIX E TO PART 58—SUMMARY OF PROBE AND MONITORING PATH SITING CRITERIA

| Pollutant | Scale (maximum monitoring path length, meters) | Height from ground to probe, inlet or 80% of monitoring path [1] | Horizontal and vertical distance from supporting structures [2] to probe, inlet or 90% of monitoring path [1] (meters) | Distance from trees to probe, inlet or 90% of monitoring path [1] (meters) | Distance from roadways to probe, inlet or monitoring path [1] (meters) |
|---|---|---|---|---|---|
| $SO_2$ [3,4,5,6] ..... | Middle (300 m) ..... Neighborhood Urban, and Regional (1 km). | 2–15 | >1 | >10 | N/A. |

TABLE E–4 OF APPENDIX E TO PART 58—SUMMARY OF PROBE AND MONITORING PATH SITING CRITERIA—Continued

| Pollutant | Scale (maximum monitoring path length, meters) | Height from ground to probe, inlet or 80% of monitoring path [1] | Horizontal and vertical distance from supporting structures [2] to probe, inlet or 90% of monitoring path [1] (meters) | Distance from trees to probe, inlet or 90% of monitoring path [1] (meters) | Distance from roadways to probe, inlet or monitoring path [1] (meters) |
|---|---|---|---|---|---|
| CO [4,5,7] | Micro, middle (300 m).<br>Neighborhood (1 km). | 2–7: 2–15 | >1 | >10 | *2–10 for downtown urban area or street canyon microscale;* ≤50 for near-road microscale; *see* Table E–2 of this appendix for middle and neighborhood scales. |
| $O_3$ [3,4,5] | Middle (300 m)<br>Neighborhood, Urban, and Regional (1 km). | 2–15 | >1 | >10 | *See* Table E–1 of this appendix for all scales. |
| $NO_2$ [3,4,5] | Micro (Near-road [50–300]).<br>Middle (300m)<br>Neighborhood, Urban, and Regional (1 km). | 2–7 (micro); 2–15 (all other scales) | >1 | >10 | ≤50 meters for near-road microscale;<br>*See* Table E–1 of this appendix for all other scales. |
| Ozone precursors (for PAMS) [3,4,5]. | Neighborhood and Urban (1 km). | 2–15 | >1 | >10 | *See* Table E–4 of this appendix for all scales. |
| PM,Pb [3,4,5,6,8] | Micro: Middle, Neighborhood, Urban and Regional. | 2–7 (micro);<br>2–7 (middle $PM_{10-2.5}$);<br>2–15 (all other scales) | >2 (all scales, horizontal distance only) | >10 (all scales) | 2–10 (micro); *see* Figure E–1 of this appendix for all other scales. |

N/A—Not applicable.

[1] Monitoring path for open path analyzers is applicable only to middle or neighborhood scale CO monitoring, middle, neighborhood, urban, and regional scale $NO_2$ monitoring, and all applicable scales for monitoring $SO_2$,$O_3$, and $O_3$ precursors.

[2] When probe is located on a rooftop, this separation distance is in reference to walls, parapets, or penthouses located on roof.

[3] Should be >20 meters from the drip-line of tree(s) and must be 10 meters from the drip-line when the tree(s) act as an obstruction.

[4] Distance from sampler, probe, or 90% of monitoring path to obstacle, such as a building, must be at least twice the height the obstacle protrudes above the sampler, probe, or monitoring path. Sites not meeting this criterion may be classified as middle scale (*see* text).

[5] Must have unrestricted airflow 270 degrees around the probe or sampler; 180 degrees if the probe is on the side of a building or a wall.

[6] The probe, sampler, or monitoring path should be away from minor sources, such as furnace or incineration flues. The separation distance is dependent on the height of the minor source's emission point (such as a flue), the type of fuel or waste burned, and the quality of the fuel (sulfur, ash, or lead content). This criterion is designed to avoid undue influences from minor sources.

[7] For microscale CO monitoring sites in downtown areas or street canyons (not at near-road $NO_2$ monitoring sites), the probe must be >10 meters from a street intersection and preferably at a midblock location.

[8] Collocated monitors must be within 4 meters of each other and at least 2 meters apart for flow rates greater than 200 liters/min or at least 1 meter apart for samplers having flow rates less than 200 liters/min to preclude airflow interference.

* * * * *

[FR Doc. 2011–2404 Filed 2–10–11; 8:45 am]

**BILLING CODE 6560–50–P**