AUTHENTICATED
U.S. GOVERNMENT
INFORMATION
GPO

FEDERAL REGISTER

Vol. 76 Tuesday,
No. 45 March 8, 2011

Pages 12549–12816

OFFICE OF THE FEDERAL REGISTER

The **FEDERAL REGISTER** (ISSN 0097–6326) is published daily, Monday through Friday, except official holidays, by the Office of the Federal Register, National Archives and Records Administration, Washington, DC 20408, under the Federal Register Act (44 U.S.C. Ch. 15) and the regulations of the Administrative Committee of the Federal Register (1 CFR Ch. I). The Superintendent of Documents, U.S. Government Printing Office, Washington, DC 20402 is the exclusive distributor of the official edition. Periodicals postage is paid at Washington, DC.

The **FEDERAL REGISTER** provides a uniform system for making available to the public regulations and legal notices issued by Federal agencies. These include Presidential proclamations and Executive Orders, Federal agency documents having general applicability and legal effect, documents required to be published by act of Congress, and other Federal agency documents of public interest.

Documents are on file for public inspection in the Office of the Federal Register the day before they are published, unless the issuing agency requests earlier filing. For a list of documents currently on file for public inspection, see *www.ofr.gov.*

The seal of the National Archives and Records Administration authenticates the Federal Register as the official serial publication established under the Federal Register Act. Under 44 U.S.C. 1507, the contents of the **Federal Register** shall be judicially noticed.

The **Federal Register** is published in paper and on 24x microfiche. It is also available online at no charge at *www.fdsys.gov*, a service of the U.S. Government Printing Office.

The online edition of the **Federal Register** is issued under the authority of the Administrative Committee of the Federal Register as the official legal equivalent of the paper and microfiche editions (44 U.S.C. 4101 and 1 CFR 5.10). It is updated by 6:00 a.m. each day the **Federal Register** is published and includes both text and graphics from Volume 59, 1 (January 2, 1994) forward. For more information, contact the GPO Customer Contact Center, U.S. Government Printing Office. Phone 202-512-1800 or 866-512-1800 (toll free). E-mail, *gpo@custhelp.com.*

The annual subscription price for the **Federal Register** paper edition is $749 plus postage, or $808, plus postage, for a combined **Federal Register, Federal Register** Index and List of CFR Sections Affected (LSA) subscription; the microfiche edition of the **Federal Register** including the **Federal Register** Index and LSA is $165, plus postage. Six month subscriptions are available for one-half the annual rate. The prevailing postal rates will be applied to orders according to the delivery method requested. The price of a single copy of the daily **Federal Register,** including postage, is based on the number of pages: $11 for an issue containing less than 200 pages; $22 for an issue containing 200 to 400 pages; and $33 for an issue containing more than 400 pages. Single issues of the microfiche edition may be purchased for $3 per copy, including postage. Remit check or money order, made payable to the Superintendent of Documents, or charge to your GPO Deposit Account, VISA, MasterCard, American Express, or Discover. Mail to: U.S. Government Printing Office—New Orders, P.O. Box 979050, St. Louis, MO 63197-9000; or call toll free 1-866-512-1800, DC area 202-512-1800; or go to the U.S. Government Online Bookstore site, see *bookstore.gpo.gov.*

There are no restrictions on the republication of material appearing in the **Federal Register.**

How To Cite This Publication: Use the volume number and the page number. Example: 76 FR 12345.

Postmaster: Send address changes to the Superintendent of Documents, Federal Register, U.S. Government Printing Office, Washington, DC 20402, along with the entire mailing label from the last issue received.

SUBSCRIPTIONS AND COPIES

PUBLIC

Subscriptions:

Paper or fiche	**202–512–1800**
Assistance with public subscriptions	**202–512–1806**

General online information **202–512–1530; 1–888–293–6498**

Single copies/back copies:

Paper or fiche	**202–512–1800**
Assistance with public single copies	**1–866–512–1800 (Toll-Free)**

FEDERAL AGENCIES

Subscriptions:

Paper or fiche	**202–741–6005**
Assistance with Federal agency subscriptions	**202–741–6005**

FEDERAL REGISTER WORKSHOP

THE FEDERAL REGISTER: WHAT IT IS AND HOW TO USE IT

FOR: Any person who uses the Federal Register and Code of Federal Regulations.

WHO: Sponsored by the Office of the Federal Register.

WHAT: Free public briefings (approximately 3 hours) to present:

1. The regulatory process, with a focus on the Federal Register system and the public's role in the development of regulations.
2. The relationship between the Federal Register and Code of Federal Regulations.
3. The important elements of typical Federal Register documents.
4. An introduction to the finding aids of the FR/CFR system.

WHY: To provide the public with access to information necessary to research Federal agency regulations which directly affect them. There will be no discussion of specific agency regulations.

WHEN: Tuesday, March 22, 2011
9 a.m.–12:30 p.m.

WHERE: Office of the Federal Register
Conference Room, Suite 700
800 North Capitol Street, NW.
Washington, DC 20002

RESERVATIONS: (202) 741–6008

Printed on recycled paper.

Contents

Federal Register

Vol. 76, No. 45

Tuesday, March 8, 2011

Agriculture Department
See Forest Service

Broadcasting Board of Governors
NOTICES
Meetings; Sunshine Act, 12692

Census Bureau
NOTICES
The 2010 Census Count Question Resolution Program, 12694–12700

Centers for Disease Control and Prevention
NOTICES
Agency Information Collection Activities; Proposals, Submissions, and Approvals, 12739–12740
World Trade Center Health Program; Request for Information, 12740

Centers for Medicare & Medicaid Services
NOTICES
Meetings:
Consumer Operated and Oriented Plan Advisory Board, 12740–12741

Children and Families Administration
NOTICES
Agency Information Collection Activities; Proposals, Submissions, and Approvals, 12741–12742

Commerce Department
See Census Bureau
See Economic Development Administration
See International Trade Administration
See National Institute of Standards and Technology
See National Oceanic and Atmospheric Administration
NOTICES
Agency Information Collection Activities; Proposals, Submissions, and Approvals, 12692–12693
Request for Members, Innovation Advisory Board, 12693–12694

Copyright Office, Library of Congress
NOTICES
Section 302 Report; Correction, 12760–12761

Defense Acquisition Regulations System
PROPOSED RULES
Defense Federal Acquisition Regulation Supplements:
Reporting of Government-Furnished Property, 12666–12667

Defense Department
See Defense Acquisition Regulations System
See Navy Department

Economic Development Administration
PROPOSED RULES
Request for Comments:
Review and Improvement of EDAs Regulations, 12616–12617

Education Department
RULES
Department of Education Acquisition Regulation, 12796–12815
NOTICES
Agency Information Collection Activities; Proposals, Submissions, and Approvals, 12717
Disability and Rehabilitation Research Projects and Centers Program:
Field Initiated Projects FY 2011 Competition, 12717–12718
Meetings:
National Board for Education Sciences, 12718–12719
Safe Schools/Healthy Students Program; Correction, 12719

Employment and Training Administration
NOTICES
Agency Information Collection Activities; Proposals, Submissions, and Approvals, 12758
Agency Information Collection Activities; Proposals, Submissions, and Approvals:
Disaster Unemployment Assistance Activities, 12760
Evaluation of the Reintegration of Ex-Offenders—Adult Program, 12758–12760

Energy Department
See Federal Energy Regulatory Commission

Environmental Protection Agency
RULES
Approval and Promulgation of Implementation Plans and Designation of Areas for Air Quality Planning Purposes:
Tennessee; Redesignation of the Knoxville 1997 8-Hour Ozone Nonattainment Area to Attainment for the 1997 8-Hour Ozone Standards, 12587–12596
PROPOSED RULES
Approval and Promulgation of Implementation Plans:
State of Oregon; Regional Haze State Implementation Plan, 12651–12664
NOTICES
Agency Information Collection Activities; Proposals, Submissions, and Approvals, 12728
Cambridge Environmental Inc.; Transfer of Data, 12729–12730
Clean Air Act Operating Permit Program:
Objection to State Operating Permit for U.S. Steel; Granite City Works, 12730
Issuance of Federal Operating Permit to Great Lakes Gas Transmission Limited Partnership, 12730–12731
Meetings:
Good Neighbor Environmental Board, 12731
Proposed Consent Decree:
Clean Air Act Citizen Suit, 12731–12732
Public Teleconference of the Air Monitoring and Methods Subcommittee, 12732–12733

Equal Employment Opportunity Commission
NOTICES
Meetings; Sunshine Act, 12733

Federal Aviation Administration
RULES
Airworthiness Directives:
Various Transport Category Airplanes Equipped with Chemical Oxygen Generators Installed in a Lavatory, 12556–12558
Amendment to Special Use Airspace Restricted Areas R–2203, and R–2205; Alaska, 12558–12559
Antidrug and Alcohol Misuse Prevention Programs for Personnel Engaged in Specified Aviation Activities:
Supplemental Regulatory Flexibility Determination, 12559–12563
Lavatory Oxygen Systems, 12550–12556
PROPOSED RULES
Airworthiness Directives:
Boeing Co. Model 737–600, –700, –700C, –800, and –900 Series Airplanes, 12634–12643
Bombardier, Inc. Model DHC 8 400 Series Airplanes, 12629–12634
Dassault–Aviation Model FALCON 7X Airplanes, 12624–12627
Diamond Aircraft Industries GmbH Models DA 42, DA 42 NG, and DA 42 M–NG Airplanes, 12627–12629
The Boeing Company 737–200, –200C, –300, –400, and –500 Series Airplanes, 12619–12624
The Boeing Company Model 777–200 and –300 Series Airplanes, 12617–12619
Helicopter Area Navigation Routes:
Northeast United States, 12643–12645
Revocation of VOR Federal Airway V–284:
New Jersey; Withdrawal, 12645
NOTICES
Environmental Assessments; Availability, etc.:
Pegasus Launches at Cape Canaveral Air Force Station, FL, 12787–12788

Federal Communications Commission
RULES
Review of the Emergency Alert System, 12600–12604
NOTICES
Grantees of Equipment Authorization:
Shenzhen Tangreat Technology Co., Ltd., 12733–12738

Federal Emergency Management Agency
RULES
Suspension of Community Eligibility, 12596–12600
PROPOSED RULES
Proposed Flood Elevation Determinations; Correction, 12665–12666
NOTICES
Agency Information Collection Activities; Proposals, Submissions, and Approvals:
Emergency Management Institute Follow-up Evaluation Survey, 12749–12750

Federal Energy Regulatory Commission
NOTICES
Application Accepted for Filing, etc.:
City of Escondido, California, and Vista Irrigation District, 12719–12721
Application:
Northern Natural Gas Co., 12721–12722
Availability of Environmental Assessment:
Alabama Power Co., 12722
Combined Filings, 12723–12726
Initial Market-Based Rate Filing:
DTE Calvert City, LLC, 12726–12727
Tropicana Manufacturing Co., Inc., 12726
Preliminary Permit Application Accepted for Filing, etc.:
Black Canyon Hydro, LLC, 12727–12728
Pacific Gas and Electric Co., 12728

Federal Reserve System
NOTICES
Formations of, Acquisitions by, and Mergers of Bank Holding Companies, 12739

Federal Transit Administration
NOTICES
Agency Information Collection Activities; Proposals, Submissions, and Approvals, 12788
Environmental Impact Statements; Availability, etc.:
Proposed Urban Rail System in Austin, TX, 12788–12791

Fish and Wildlife Service
RULES
Subsistence Management Regulations for Public Lands in Alaska:
Taking of Fish and Shellfish Regulations, 12564–12587
PROPOSED RULES
Endangered and Threatened Wildlife and Plants:
12-Month Finding on a Petition to List the Mt. Charleston Blue Butterfly, 12667–12683
Texas Kangaroo Rat, 12683–12690
NOTICES
Endangered and Threatened Wildlife and Plants:
Applications for Incidental Take Permits, etc.; Indian River County, FL, 12751–12752

Food and Drug Administration
RULES
Amendments to General Regulations of the Food and Drug Administration, 12563
Oral Dosage Form New Animal Drugs:
Spinosad and Milbemycin Oxime, 12563–12564
NOTICES
Guidance for Industry and Food and Drug Administration Staff; Availability:
Clinical Investigations of Devices Indicated for the Treatment of Urinary Incontinence, 12742–12743
Medical Device Reporting:
Malfunction Frequency, 12743–12744

Forest Service
RULES
Subsistence Management Regulations for Public Lands in Alaska:
Taking of Fish and Shellfish Regulations, 12564–12587
NOTICES
Meetings:
Modoc County Resource Advisory Committee, 12691
Ravalli County Resource Advisory Committee, 12691
San Juan National Forest Resource Advisory Council, 12692
Southwest Idaho Resource Advisory Committee, 12691
Yakutat Resource Advisory Committee, 12691–12692

Government Accountability Office
RULES
Public Availability of Government Accountability Office Records, 12549–12550

Health and Human Services Department
See Centers for Disease Control and Prevention
See Centers for Medicare & Medicaid Services
See Children and Families Administration

See Food and Drug Administration
See National Institutes of Health

Homeland Security Department
See Federal Emergency Management Agency
See U.S. Citizenship and Immigration Services
PROPOSED RULES
Privacy Act of 1974:
Implementation of Exemptions, etc., 12609–12611
NOTICES
Privacy Act; Systems of Records, 12745–12749

Interior Department
See Fish and Wildlife Service
See Land Management Bureau
See National Park Service
See Reclamation Bureau
NOTICES
Allocation of Duty Exemptions:
Watch Producers Located in the U.S. Virgin Islands, 12700

Internal Revenue Service
NOTICES
Meetings:
Electronic Tax Administration Advisory Committee, 12793–12794

International Trade Administration
NOTICES
Allocation of Duty Exemptions:
Watch Producers Located in the U.S. Virgin Islands, 12700
Final Results of Antidumping Duty Administrative Review:
Polyethylene Retail Carrier Bags from Thailand, 12700–12702
Final Results of Expedited Sunset Reviews:
Certain Cut-to-Length Carbon-Quality Steel Plate from India, Indonesia, Italy, and the Republic of Korea, 12702–12703
Preliminary Results of Antidumping Duty Administrative Review:
Certain Preserved Mushrooms from the People's Republic of China, 12704–12711

Justice Department
NOTICES
Lodging of Proposed Consent Decrees:
United States v. John R. Cumbie, 12757

Labor Department
See Employment and Training Administration
See Mine Safety and Health Administration
NOTICES
Agency Information Collection Activities; Proposals, Submissions, and Approvals:
Vendor Outreach Session Information Management System, 12757–12758

Land Management Bureau
NOTICES
Filing of Plats of Survey:
Oregon/Washington, 12752–12753
Temporary Closures on Public Lands in Ada and Elmore Counties, Idaho, 12753

Library of Congress
See Copyright Office, Library of Congress

Mine Safety and Health Administration
PROPOSED RULES
Lowering Miners Exposure to Respirable Coal Mine Dust, 12648–12651

National Highway Traffic Safety Administration
NOTICES
Agency Information Collection Activities; Proposals, Submissions, and Approvals, 12791
Petition for Exemption from the Federal Motor Vehicle Motor Theft Prevention Standard:
General Motors Corp., 12792–12793

National Institute of Standards and Technology
NOTICES
Meetings:
Smart Grid Advisory Committee, 12711–12712
Public Workshops; Draft Federal Information Processing Standard:
Personal Identity Verification of Federal Employees and Contractors, 12712–12714

National Institutes of Health
NOTICES
Meetings:
National Center for Complementary and Alternative Medicine, 12744
National Heart, Lung, and Blood Institute, 12744–12745
National Institute of Allergy and Infectious Diseases, 12745
National Institute on Deafness and Other Communication Disorders, 12744

National Oceanic and Atmospheric Administration
RULES
Fisheries of the Caribbean, Gulf of Mexico, and South Atlantic:
Coastal Migratory Pelagic Resources of the Gulf of Mexico and South Atlantic; Trip Limit Reduction, 12604–12605
Snapper–Grouper Fishery Off the Southern Atlantic States; Amendment 17B; Correction, 12605–12606
Fisheries of the Exclusive Economic Zone Off Alaska:
Pacific Cod by Catcher Vessels Less Than 60 feet Using Jig or Hook-and-Line Gear, etc.; Closure, 12606–12607
Reallocation of Pollock in the Bering Sea and Aleutian Islands, 12607–12608
NOTICES
Agency Information Collection Activities; Proposals, Submissions, and Approvals:
Marianas Trench Marine National Monument Knowledge and Attitudes Survey, 12714–12715
Application for Exempted Fishing Permit:
Magnuson–Stevens Act Provisions; General Provisions for Domestic Fisheries, 12715–12716

National Park Service
NOTICES
Environmental Assessments; Availability, etc.:
President's Park; Permanent Roadway Closures, Re-Design of Security Elements, and Preservation of Historic Landscape, 12753–12755

National Science Foundation
NOTICES
Agency Information Collection Activities; Proposals, Submissions, and Approvals, 12761–12763

Navy Department
NOTICES
Meetings:
Board of Visitors of Marine Corps University, 12716–12717

Nuclear Regulatory Commission
NOTICES
Applications and Amendments to Facility Operating Licenses Involving No Significant Hazards Considerations, 12763–12768
Meetings; Sunshine Act, 12768–12769

Personnel Management Office
NOTICES
Meetings:
Federal Prevailing Rate Advisory Committee; Cancellation, 12769

Reclamation Bureau
NOTICES
Environmental Impact Statements; Availability, etc.:
Municipal and Industrial Water Shortage Policy, Central Valley Project, 12755–12756
Water Management Plans; Availability, etc.:
Central Valley Project Improvement Act, 12756

Securities and Exchange Commission
PROPOSED RULES
Ownership Limitations and Governance Requirements:
Security-Based Swap Clearing Agencies, Security-Based Swap Execution Facilities, and National Securities Exchanges, etc., 12645–12648
NOTICES
Meetings; Sunshine Act, 12769
Self-Regulatory Organizations; Proposed Rule Changes:
C2 Options Exchange, Inc., 12775–12778
Financial Industry Regulatory Authority, Inc., 12769–12771
International Securities Exchange, LLC, 12778–12780
Municipal Securities Rulemaking Board, 12781–12782
NASDAQ OMX BX, Inc., 12771–12773
NASDAQ OMX PHLX LLC, 12780–12781
New York Stock Exchange LLC, 12774–12775
NYSE Amex LLC, 12773–12774
The Fixed Income Clearing Corp., 12782–12784
The NASDAQ Stock Market LLC, 12784–12786

State Department
NOTICES
Culturally Significant Objects Imported for Exhibition Determinations:
"Charlotte Salomon: Life? Or Theatre?", 12786
"Double Sexus", 12786
"Poetry in Clay: Korean Buncheong Ceramics from the Leeum, Samsung Museum of Art", 12786–12787
Meetings:
Shipping Coordinating Committee, 12787

Thrift Supervision Office
PROPOSED RULES
Risk-Based Capital Standards:
Advanced Capital Adequacy Framework—Basel II; Establishment of a Risk-Based Capital Floor, 12611–12616

Transportation Department
See Federal Aviation Administration
See Federal Transit Administration
See National Highway Traffic Safety Administration

Treasury Department
See Internal Revenue Service
See Thrift Supervision Office

U.S. Citizenship and Immigration Services
NOTICES
Agency Information Collection Activities; Proposals, Submissions, and Approvals, 12750–12751

U.S.–China Economic and Security Review Commission
NOTICES
Meetings, 12794

Separate Parts In This Issue

Part II
Education Department, 12796–12815

Reader Aids

Consult the Reader Aids section at the end of this page for phone numbers, online resources, finding aids, reminders, and notice of recently enacted public laws.

To subscribe to the Federal Register Table of Contents LISTSERV electronic mailing list, go to http://listserv.access.gpo.gov and select Online mailing list archives, FEDREGTOC-L, Join or leave the list (or change settings); then follow the instructions.

CFR PARTS AFFECTED IN THIS ISSUE

A cumulative list of the parts affected this month can be found in the Reader Aids section at the end of this issue.

4 CFR
81 12549

6 CFR
Proposed Rules:
5 12609

12 CFR
Proposed Rules:
567 12611

13 CFR
Proposed Rules:
Ch. III 12616

14 CFR
21 12550
25 12550
39 12556
73 12558
121 (2 documents) 12550, 12559
129 12550
Proposed Rules:
39 (6 documents) 12617, 12619, 12624, 12627, 12629, 12634
71 (2 documents) 12643, 12645

17 CFR
Proposed Rules:
242 12645

21 CFR
1 12563
14 12563
17 12563
520 12563

30 CFR
Proposed Rules:
70 12648
71 12648
72 12648
75 12648
90 12648

36 CFR
242 12564

40 CFR
52 12587
81 12587
Proposed Rules:
52 12651

44 CFR
64 12596
Proposed Rules:
67 12665

47 CFR
11 12600

48 CFR
Ch. 34 12796
Proposed Rules:
211 12666
212 12666
252 12666

50 CFR
100 12564
622 (2 documents) 12604, 12605
679 (2 documents) 12606, 12607
Proposed Rules:
17 (2 documents) 12667, 12683

Rules and Regulations

Federal Register
Vol. 76, No. 45
Tuesday, March 8, 2011

This section of the FEDERAL REGISTER contains regulatory documents having general applicability and legal effect, most of which are keyed to and codified in the Code of Federal Regulations, which is published under 50 titles pursuant to 44 U.S.C. 1510.

The Code of Federal Regulations is sold by the Superintendent of Documents. Prices of new books are listed in the first FEDERAL REGISTER issue of each week.

GOVERNMENT ACCOUNTABILITY OFFICE

4 CFR Part 81

Public Availability of Government Accountability Office Records

AGENCY: Government Accountability Office.

ACTION: Final rule.

SUMMARY: This rule is a revision of portions of GAO's records rule. These revisions clarify procedures to obtain Government Accountability Office (GAO) documents. Published GAO documents such as testimonies, reports, and decisions are available to the public on GAO's Web site and also may be requested over the telephone. Their wide availability eliminates the need for regulations governing their request, and accordingly published GAO documents are no longer subject to the procedures of this part. The revisions also clarify that records compiled for law enforcement purposes by another agency and records provided by GAO to another agency for law enforcement purposes are not subject to disclosure. The previous regulatory language on this point was imprecise. The changes also add steps to the procedures for using GAO's public reading facility, to facilitate the efficient use of the facility. Finally, the revisions make various housekeeping changes reflecting shifts in GAO's operating procedures.

These changes clarify for the public which GAO documents are subject to this part and how to obtain such documents.

DATES: Effective March 8, 2011.

FOR FURTHER INFORMATION CONTACT: John A. Bielec, Assistant General Counsel, 202–512–2846.

SUPPLEMENTARY INFORMATION: Part 81 of Title 4 of the Code of Federal Regulations contains the procedures for members of the public to obtain GAO documents.

GAO is amending paragraph (b) of § 81.1 to remove all published GAO documents, such as reports and decisions, from this part's purview. All such documents are publicly available on GAO's Web site, *http://www.gao.gov*, and may also be ordered over the telephone. Accordingly, regulations governing requests for public disclosure of such documents are unnecessary. It is also well established that when an agency makes its documents widely available to the public, the agency need not reproduce those documents again in response to a Freedom of Information Act (FOIA) request. *Department of Justice* v. *Tax Analysts*, 492 U.S. 136, 152 (1989). While GAO is not subject to FOIA, the principle applies equally in this context.

Published GAO documents may be downloaded free of charge from GAO's Web site. Print copies may be ordered by telephone, but GAO charges a fee to print and ship documents requested this way, as provided in § 81.7, which is unchanged by this rule. Under this revised rule, GAO will no longer accept requests via fax or mail for published documents. Requests for GAO documents not available on GAO's Web site remain subject to this part and must be submitted in writing to GAO, via either mail or e-mail, in accordance with § 81.4. Technical amendments to paragraphs (a) and (c) of § 81.1 are made as needed to conform with these changes.

Paragraph 81.6(g) is amended to clarify the types of documents GAO considers to be compiled for law enforcement purposes. Such documents are not subject to disclosure under this part.

Although GAO is not a law enforcement agency, it occasionally collects, during the course of its audits and investigations, records from law enforcement agencies that those agencies compiled for their own law enforcement purposes. While GAO did not compile the records, they are nonetheless exempt from disclosure because they were originally compiled for law enforcement purposes and may still be used for such purposes by the originating agency. Disclosure of such records would undermine the originating agency's law enforcement mission.

During the course of its work, GAO also occasionally receives information from non-law enforcement sources that indicates possible civil or criminal wrongdoing by another party. GAO forwards such information to other Federal, State, or local agencies with enforcement jurisdiction over the matter. The receiving agencies may use the information for their own investigations, prosecutions, or other law enforcement matters. GAO considers such information to be compiled for law enforcement purposes if, at the time GAO receives a request under this part for the information, the receiving agency advises GAO that the information is being, or will be, used by that agency for a law enforcement purpose. In these circumstances, GAO's disclosure of the information could undermine law enforcement operations. "Law enforcement" in this context includes civil and administrative as well as criminal matters.

This policy is consistent with the United States Supreme Court's ruling that information not originally compiled for law enforcement purposes is nevertheless exempt from public disclosure if, at the time of a request, it is being used for law enforcement purposes. *John Doe Agency* v. *John Doe Corp.*, 493 U.S. 146, 153–55 (1989).

Section 81.8 is amended to advise individuals who wish to use GAO's public reading facility to schedule an appointment and to have GAO's staff determine whether the records sought are included in the public reading facility collection.

Section 81.2 is amended to clarify and identify the entity within GAO that administers this part. Section 81.4 is amended to delete language that GAO records may be requested via a link on GAO's Web site. GAO will continue to accept requests for GAO records by e-mail. Paragraph (m) of § 81.6 is amended to correctly identify the entity within GAO that operates GAO FraudNet.

GAO submitted for comment a proposed rule containing these amendments, which was published in the **Federal Register** on November 24, 2010 (75 FR 71567). GAO received no comments on the proposed rule.

GAO is not subject to the Administrative Procedure Act.

List of Subjects in 4 CFR Part 81

Administrative practice and procedure, Archives and records, Computer technology, Electronic products, Freedom of information, Public reading room, Requests for records.

For the reasons stated in the preamble, the Government Accountability Office amends 4 CFR part 81 as follows:

PART 81—PUBLIC AVAILABILITY OF GOVERNMENT ACCOUNTABILITY OFFICE RECORDS

■ 1. The authority citation for part 81 continues to read as follows:

Authority: 31 U.S.C. 711.

■ 2. Amend § 81.1 to revise the first sentence of paragraph (a), to revise paragraph (b), and to add paragraph (c) to read as follows:

§ 81.1 Purpose and scope of part.

(a) This part implements the policy of the U.S. Government Accountability Office (GAO) with respect to the public availability of GAO records, except as set forth in paragraph (b) of this section. * * *

(b) GAO published testimonies, reports, decisions, special publications, or listings of publications are not included within the scope of this part. These documents may be obtained from the GAO Web site, *http://www.gao.gov*, or by telephone at 202–512–6000, TDD 202–512–2537, or 1–866–801–7077 (toll free). These publications may be downloaded free of charge from the GAO Web site. Paper copies requested from GAO are subject to a printing, shipping, and handling fee.

(c) Requests for all other GAO records are within the scope of this part and should be submitted to GAO as directed in paragraph (a) of § 81.4.

■ 3. Revise § 81.2 to read as follows:

§ 81.2 Administration.

GAO's Chief Quality Officer administers this part and may promulgate such supplemental rules or regulations as may be necessary.

■ 4. In § 81.4, remove the second sentence of paragraph (a).

■ 5. Amend § 81.6 to revise paragraph (g) and the sentence following the italic heading in paragraph (m) to read as follows:

§ 81.6 Records which may be exempt from disclosure.

* * * * *

(g) Records compiled for law enforcement purposes that originate in another agency, or records provided by GAO to another agency for law enforcement purposes.

* * * * *

(m) * * * Records obtained by the GAO Forensic Audits and Special Investigations (GAO FraudNet) are an example of records that could contain information covered by this exemption.

■ 6. Amend § 81.8 to add a new second sentence, and to revise the last sentence as follows:

§ 81.8 Public reading facility.

* * * To determine if a record is part of the public reading facility collection and to schedule an appointment to visit the facility, contact the Library reference desk at 202–512–2585. The facility is open to the public from 8:30 a.m. to 4 p.m. except Saturdays, Sundays, and Federal holidays.

Lynn H. Gibson,

General Counsel, U.S. Government Accountability Office.

[FR Doc. 2011–4988 Filed 3–7–11; 8:45 am]

BILLING CODE 1610–02–P

DEPARTMENT OF TRANSPORTATION

Federal Aviation Administration

14 CFR Parts 21, 25, 121, and 129

[Docket No. FAA–2011–0186; Amendment Nos. 21–94, 25–133, 121–354, and 129–50; SFAR 111]

RIN 2120–AJ92

Lavatory Oxygen Systems

AGENCY: Federal Aviation Administration (FAA), DOT.

ACTION: Interim final rule; request for comments.

SUMMARY: This action temporarily authorizes variances from existing standards related to the provisioning of supplemental oxygen inside lavatories. This action is necessitated by other mandatory actions that temporarily render such oxygen systems inoperative.

DATES: This interim rule is effective March 8, 2011 and remains in effect until further notice. Submit comments on or before May 9, 2011.

ADDRESSES: Send comments identified by docket number FAA–2011–0186 using any of the following methods:

- *Federal eRulemaking Portal:* Go to *http://www.regulations.gov* and follow the online instructions for sending your comments electronically.
- *Mail:* Send comments to Docket Operations, M–30; U.S. Department of Transportation (DOT), 1200 New Jersey Avenue, SE., Room W12–140, West Building Ground Floor, Washington, DC 20590–0001.
- *Hand Delivery or Courier:* Take comments to Docket Operations in Room W12–140 of the West Building Ground Floor at 1200 New Jersey Avenue, SE., Washington, DC between 9 a.m. and 5 p.m., Monday through Friday, except Federal holidays.
- *Fax:* Fax comments to Docket Operations at 202–493–2251.

Privacy: The FAA will post all comments it receives, without change, to *http://www.regulations.gov*, including any personal information the commenter provides. Using the search function of the docket Web site, anyone can find and read the electronic form of all comments received into any FAA dockets, including the name of the individual sending the comment (or signing the comment for an association, business, labor union, *etc.*). DOT's complete Privacy Act Statement can be found in the **Federal Register** published on April 11, 2000 (65 FR 19477–19478), as well as at *http://DocketsInfo.dot.gov.*

Docket: Background documents or comments received may be read at *http://www.regulations.gov* at any time. Follow the online instructions for accessing the docket or go to Docket Operations in Room W12–140 of the West Building Ground Floor at 1200 New Jersey Avenue, SE., Washington, DC, between 9 a.m. and 5 p.m., Monday through Friday, except Federal holidays.

FOR FURTHER INFORMATION CONTACT: Jeff Gardlin, Airframe and Cabin Safety Branch, ANM–115, Transport Airplane Directorate, Aircraft Certification Service, Federal Aviation Administration, Northwest Mountain Region, 1601 Lind Avenue, SW., Renton, WA 98057–3356; *telephone:* (425) 227–2136; *e-mail: jeff.gardlin@faa.gov.*

For legal questions concerning this action, contact Douglas Anderson, Federal Aviation Administration, Office of the Regional Counsel, ANM–7, Northwest Mountain Region, 1601 Lind Avenue, SW., Renton, WA 98057–3356; *telephone:* (425) 227–2166; *e-mail: douglas.anderson@faa.gov.*

SUPPLEMENTARY INFORMATION:

Good Cause

The FAA finds that notice and public comment to this interim rule are impracticable. This rule, together with Airworthiness Directive 2011–04–09, addresses an emergency situation relating to a security vulnerability in transport category airplanes. These rules both mandate action necessary to address this vulnerability and provide interim relief from other regulatory

requirements that would otherwise be violated by the mandated actions.

The FAA also finds good cause for making this interim rule effective upon publication. As discussed previously, this interim rule addresses an emergency situation, which makes it imperative that the provisions of this rule be implemented immediately.

Authority for This Rulemaking

The FAA's authority to issue rules on aviation safety is found in Title 49 of the United States Code. Subtitle I, Section 106 describes the authority of the FAA Administrator. Subtitle VII, Aviation Programs, describes in more detail the scope of the agency's authority.

This rulemaking is promulgated under the authority described in *Subtitle VII, Part A, Subpart III, Section 44701,* "*General Requirements*." Under that section, the FAA is charged with promoting safe flight of civil aircraft in air commerce by prescribing minimum standards required in the interest of safety for the design and performance of aircraft; regulations and minimum standards in the interest of safety for inspecting, servicing, and overhauling aircraft; and regulations for other practices, methods, and procedures the Administrator finds necessary for safety in air commerce. This regulation is within the scope of that authority because it revises the safety standards for design and operation of transport category airplanes.

I. Background

The FAA has become aware of a security vulnerability with certain types of oxygen systems installed inside the lavatories of most transport category airplanes. As a result, the FAA has mandated that these oxygen systems be rendered inoperative until the vulnerability can be eliminated. However, by rendering the oxygen systems inoperative to comply with that mandatory action, operators will be out of compliance with the requirements of Title 14, Code of Federal Regulations (14 CFR) 25.1447, 121.329 and 121.333. In addition to the current fleet of in-service airplanes, newly manufactured airplanes and airplanes undergoing other modification will need to render the oxygen systems in the lavatories inoperative. This SFAR is needed so the affected airplanes can continue operating until the issue is resolved.

II. Discussion of the Issue

Lavatory Oxygen Systems

Section 25.1447 specifies the quantities and accessibility requirements for supplemental oxygen systems. The supplemental oxygen systems are necessary safety equipment in the event of loss of cabin pressure. Each occupant is required to have supplemental oxygen immediately available in the event that cabin pressure drops to a certain level. Specifically, the regulations require lavatories to be equipped with two oxygen masks and, for airplanes flying above 30,000 feet, the masks must be automatically presented to the occupants.

Two masks are required inside a lavatory to address the situation where one person may be assisting another, such as an adult with a small child. Lavatory oxygen systems are generally very similar to the systems provided for passenger and flight attendant use in the rest of the cabin. The intent of the supplemental oxygen requirements in § 25.1447 is reinforced in the operational requirements of §§ 121.329 and 121.333, although neither section specifically mentions lavatories.

Safety Ramifications

Because of security vulnerability issues, the FAA has mandated that certain lavatory oxygen systems be rendered inoperative. This mandate creates a noncompliance with airworthiness and operational standards. This SFAR addresses this noncompliance by codifying relief from the relevant airworthiness and operational requirements while the issue is being resolved.

The FAA has conducted a risk analysis to assess the safety implications of temporarily not having supplemental oxygen available inside lavatories. To support the risk assessment, earlier studies involving passengers' use of oxygen were reviewed. For a different rulemaking, the FAA tasked the Aviation Rulemaking Advisory Committee (ARAC) to make recommendations for safety standards when airplanes are operating at high altitudes. As part of its effort, the ARAC did a comprehensive assessment of the frequency and nature of the need for supplemental oxygen systems in service. The ARAC identified 2,800 instances over a 40-year period and categorized them by cause, severity, and consequence. The majority of these instances were caused by malfunctions of the cabin pressurization system. However, in none of those 2,800 instances was there a loss of life due to lack of oxygen. The ARAC used these data in making recommendations to the FAA on future rulemaking.

The FAA has reviewed the service history since the ARAC recommendations were made and found that the types and frequencies of incidents, as well as their causes, are consistent with the historical record. The relative risks and service history have not changed in any significant way since the ARAC recommendations were issued. With respect to this SFAR, the only affected areas of the airplane are the lavatories, as opposed to the earlier assessments, which applied to the entire airplane. The lavatories are sporadically occupied during flight, and by a small number of passengers at any given time. This limits the potential impact on safety.

The ARAC found that the frequency of occurrences necessitating the use of oxygen was around 10^{-8}/flight-hour for causes other than a malfunction of the pressurization system (these tend to be slower losses of pressure, or are identified at lower altitudes, and therefore are not as critical for this action). The probability that a lavatory will be occupied at any given moment is not known. It is not 100% and it is not 0%. If, for the purposes of this assessment, we assume the probability is 50%, then the probability of a person in a lavatory needing oxygen is $\sim 5 \times 10^{-9}$/flight-hour.

The FAA envisions a two- to four-year regulatory process to restore the affected oxygen systems to their full operational capability. The FAA has determined that during this period, the slight increase in the safety risk to a small number of individuals is outweighed by the elimination of the greater security risk that prompted the original requirement to disable the lavatory supplemental oxygen system. Nonetheless, the FAA is aggressively pursuing design solutions that will eliminate the previously identified security concerns with lavatory oxygen systems and restore oxygen to the lavatories in an expeditious manner. Further rulemaking will consider the need for changes to the type certification rules and incorporation into the fleet via changes to the operating rules. The implementation of that rulemaking will correspond with the expiration of this SFAR.

The SFAR Provisions

This SFAR allows all air carriers that are required to render lavatory oxygen systems inoperative, as it pertains to the lavatory oxygen systems only, in accordance with an FAA directive to continue to operate without complying with specific regulations pertaining to supplemental oxygen systems. This SFAR also permits manufacturers and modifiers of transport category airplanes to deliver or return to service airplanes affected by the FAA directive with the

same relief. In addition, this SFAR requires certain procedural and configuration enhancements to reduce the safety risk to passengers in the unlikely event that they should need oxygen while in a lavatory.

We intend to issue a new rule to address the safety concerns with lavatory oxygen systems within the duration of this SFAR. As noted above, the compliance date for that rule and the expiration of this SFAR will be aligned.

III. Regulatory Notices and Analyses

This rulemaking action is a significant rule within the meaning of Executive Order 12866 and DOT's Regulatory Policies and Procedures, because the subject matter is of significant interest to the public. Because this interim rule addresses an emergency situation, within the meaning of Section 6(a)(3)(D) of the Executive Order, the agency has notified the Office of Management and Budget of this rule but has not followed the coordination procedures specified in the Executive Order.

Paperwork Reduction Act

The Paperwork Reduction Act of 1995 (44 U.S.C. 3507(d)) requires that the FAA consider the impact of paperwork and other information collection burdens imposed on the public. The FAA has determined that there is no new requirement for information collection associated with this interim rule.

International Compatibility

In keeping with U.S. obligations under the Convention on International Civil Aviation, it is FAA policy to conform to International Civil Aviation Organization (ICAO) Standards and Recommended Practices to the maximum extent practicable. The FAA has determined that these regulations are not inconsistent with any ICAO Standards and Recommended Practices.

Regulatory Evaluation, Regulatory Flexibility Determination, International Trade Impact Assessment, and Unfunded Mandates Assessment

Changes to Federal regulations must undergo several economic analyses. First, Executive Order 12866 directs that each Federal agency shall propose or adopt a regulation only upon a reasoned determination that the benefits of the intended regulation justify its costs. Second, the Regulatory Flexibility Act of 1980 (Pub. L. 96–354) requires agencies to analyze the economic impact of regulatory changes on small entities. Third, the Trade Agreements Act (Pub. L. 96–39) prohibits agencies from setting standards that create unnecessary obstacles to the foreign commerce of the United States. In developing U.S. standards, the Trade Act requires agencies to consider international standards and, where appropriate, that they be the basis of U.S. standards. And fourth, the Unfunded Mandates Reform Act of 1995 (Pub. L. 104–4) requires agencies to prepare a written assessment of the costs, benefits, and other effects of proposed or final rules that include a Federal mandate likely to result in the expenditure by State, local, or Tribal governments, in the aggregate, or by the private sector, of $100 million or more annually (adjusted for inflation with base year of 1995). This portion of the preamble summarizes the FAA's analysis of the economic impacts of this SFAR.

In conducting these analyses, the FAA has determined that this final rule: (1) Has benefits that justify its costs, (2) is not an economically "significant regulatory action" as defined in section 3(f) of Executive Order 12866, (3) is "significant" as defined in DOT's Regulatory Policies and Procedures; (4) will not have a significant economic impact on a substantial number of small entities; (5) will not create unnecessary obstacles to the foreign commerce of the United States; and (6) will not impose an unfunded mandate on State, local, or Tribal governments, or on the private sector

Department of Transportation Order DOT 2100.5 prescribes policies and procedures for simplification, analysis, and review of regulations. If the expected cost impact is so minimal that a proposed or final rule does not warrant a detailed evaluation, this order permits that a statement to that effect, and the basis for it, be included in the preamble if a detailed regulatory evaluation of the cost and benefits is not prepared. Such a determination has been made for this rule. The reasoning for this determination follows:

The FAA has become aware of a security vulnerability with certain types of oxygen systems installed inside the lavatories of most passenger-carrying part 121 transport category airplanes. As a result, in an earlier rule the FAA mandated that these lavatory oxygen systems be rendered inoperative until the vulnerability can be eliminated. However, by rendering the oxygen systems inoperative to comply with the mandatory actions, operators will be out of compliance with current FAA requirements. The affected fleet includes the current fleet of in-service and newly manufactured passenger-carrying transport category airplanes operated under parts 121 and 129 (U.S.-registered airplanes). This SFAR requires the removal of the inoperative oxygen masks for passenger safety. Also, this SFAR is needed so the affected airplanes can continue operating until the issue is resolved.

The FAA has determined that on average, part 121 passenger-carrying turbopropeller-driven airplanes (turboprops) have one lavatory; part 121 regional jets have two lavatories; part 121 narrow-body turbojet-powered airplanes (turbojets) have three lavatories; and part 121 wide-body turbojets have 10 lavatories per airplane.

The FAA has also determined that the time necessary to remove the inoperative oxygen masks is 10 to 15 minutes per airplane lavatory and will be performed by a qualified, FAA-certificated aircraft mechanic. In addition, the FAA has determined that there would be no extra parts necessary in removing the inoperative oxygen masks. Therefore, with no extra parts necessary, there are also no additional maintenance or fuel burn costs.

The FAA is using a $48.38 hourly rate for a mechanic working for an airplane manufacturer or modifier. We obtained the mechanic's hourly rate from the Bureau of Labor Statistics, Table 7.1. These rates include wages and benefits.

To estimate the total costs of the SFAR, the FAA had to analyze the current fleet of part 121 airplanes which are affected by the SFAR. We obtained a list of the current U.S.-operated, passenger-carrying civilian airplanes operating under 14 CFR part 121 from the FAA National Vital Information Subsystem (NVIS) database.[1] The FAA assumes that for newly-delivered, part 121 passenger-carrying airplanes, the inoperative oxygen masks will have already been removed. Based upon that assumption, we have matched each airplane with its average number of lavatories.

The following table shows the number of affected passenger-carrying, part 121 airplanes and the individual airplane costs for a turboprop, regional jet, and narrow- and wide-body turbojet.

[1] The National Vital Information Subsystem (NVIS) is a subsystem of the Flight Standards Automation System (FSAS), which is a comprehensive information system used primarily by inspectors to record and disseminate data associated with inspector activity and the aviation environment. NVIS maintains up-to-date information about the aviation community within the jurisdiction of Flight Standards.

Cost Range per Individual Part 121 Airplane				
Airplane	Number of Airplanes	Number of Lavatories	Cost Per Airplane	
			Low	High
Turboprop	411	1	$7.23	$10.85
Regional Jets	1,762	2	$14.46	$21.69
Narrow Body Turbojet	3,243	3	$21.69	$32.54
Wide body Turbojet	555	10	$72.30	$108.45

The FAA calculated the range of the total costs of the SFAR by taking the product for each of the affected passenger-carrying, part 121 airplanes; the number of lavatories on each airplane; the hourly rate of a mechanic working for an airplane manufacturer; and the time it takes to render the oxygen systems inoperative. We then summed the costs for each of the affected part 121 airplanes to obtain a total cost for this SFAR. The SFAR's requirement to remove inoperative oxygen masks has a compliance time of a maximum of 30 days. The FAA is publishing the SFAR in 2011; therefore, all costs will be in nominal 2011 dollars.

The following table shows these total cost results by equipment group:

Total Cost Range		
Airplane	Low	High
Turboprop	$2,972	$4,457
Regional Jets	$50,957	$76,436
Narrow Body Turbojet	$211,022	$316,533
Wide body Turbojet	$401,265	$601,898
Total	**$666,216**	**$999,323**

The FAA believes these costs are minimal. The removal of inoperative lavatory oxygen masks is to ensure passengers would not inadvertently try to use such a mask in a depressurization. We believe these safety benefits far exceed the minimal costs.

Regulatory Flexibility Determination

The Regulatory Flexibility Act of 1980 (Pub. L. 96–354) (RFA) establishes "as a principle of regulatory issuance that agencies shall endeavor, consistent with the objectives of the rule and of applicable statutes, to fit regulatory and informational requirements to the scale of the businesses, organizations, and governmental jurisdictions subject to regulation. To achieve this principle, agencies are required to solicit and consider flexible regulatory proposals and to explain the rationale for their actions to assure that such proposals are given serious consideration." The RFA covers a wide range of small entities, including small businesses, not-for-profit organizations, and small governmental jurisdictions. Agencies must perform a review to determine whether a rule will have a significant economic impact on a substantial number of small entities. If the agency determines that it will, the agency must prepare a regulatory flexibility analysis as described in the RFA.

However, if an agency determines that a rule is not expected to have a significant economic impact on a substantial number of small entities, section 605(b) of the RFA provides that the head of the agency may so certify and a regulatory flexibility analysis is not required. The certification must include a statement providing the factual basis for this determination, and the reasoning should be clear. The FAA believes that this SFAR will not have a significant economic impact on a substantial number of small entities for the following reason.

The net effect of the SFAR is to eliminate security vulnerabilities with certain types of oxygen systems installed inside the lavatories of most passenger-carrying, part 121 transport category airplanes. The SFAR requires the removal of the inoperative oxygen masks installed inside the lavatories of passenger-carrying, part 121 transport category airplanes.

Under the RFA, the FAA must determine whether a rule significantly affects a substantial number of small entities. This determination is typically based on small entity size and cost thresholds that vary depending on the affected industry.

Using the size standards from the Small Business Administration for Air Transportation and Aircraft Manufacturing, we defined companies as small entities if they have fewer than 1,500 employees.[2]

The SFAR has a compliance time of a maximum of 30 days. The FAA believes the SFAR will be published in 2011; therefore, all costs will be in nominal 2011 dollars. For this analysis, we considered the economic impact of this SFAR on small-entity part 121 operators. We obtained a list of part 121 operators from the FAA Flight Standards Service NVIS database.[3] Using information provided by the U.S. Department of Transportation Form 41 filings, we obtained company revenue and employment for most of the part 121 U.S. operators.

Using the methodology discussed above, we determined that of the 55 part 121 U.S. operators that could be affected by the rule, there are 38 that reported annual employment data. Of the 38 air carriers that reported annual employment data, 14 air carriers meet the SBA size standard for small business of 1,500. All of the 14 air carriers reported annual revenue.

[2] 13 CFR part 121, Size Standards Used To Define Small Business Concerns, Sector 48–49 Transportation, Subsector 481 Air Transportation.

[3] The National Vital Information Subsystem (NVIS) is a subsystem of the Flight Standards Automation System (FSAS), which is a comprehensive information system used primarily by inspectors to record and disseminate data associated with inspector activity and the aviation environment. NVIS maintains up-to-date information about the aviation community within the jurisdiction of Flight Standards.

To assess the SFAR's cost impact to small-entity part 121 operators, the FAA has determined that the time necessary to render lavatory oxygen systems inoperative is 10 to 15 minutes per airplane lavatory and will be performed by a qualified, FAA-certificated aircraft mechanic. For this analysis, we will conservatively use the high time of 15 minutes.

The FAA is using a $48.38 hourly rate for a mechanic working for an airplane manufacturer or modifier. We obtained the mechanic's hourly rate from the Bureau of Labor Statistics, Table 7.1. These rates include wages and benefits.

The FAA calculated the total costs of the SFAR by taking the product for each of the affected passenger-carrying, part 121 airplanes; the number of lavatories on each airplane; the hourly rate of a mechanic working for an airplane manufacturer or modifier; and the time it takes to render the oxygen systems inoperative. We then summed the costs for each of the affected part 121 airplanes to obtain a total cost for this SFAR. We then measured the economic impact on small entities by dividing the estimated compliance cost by each of the 14 small entities' annual revenue.

The SFAR's cost is estimated to be less than one percent of annual revenues for all 14 small-entity operators. The following table shows these results.

Operator	Employees	Revenue	SFAR Costs	Annual Revenue
1	396	$192,338,480	$390	0.0002%
2	409	$113,237,577	$976	0.0009%
3	540	$239,239,631	$6,897	0.0029%
4	560	$141,892,908	$1,085	0.0008%
5	761	$117,246,489	$1,562	0.0013%
6	761	$255,275,336	$5,813	0.0023%
7	1,024	$203,168,058	$2,126	0.0010%
8	1,024	$615,856,528	$3,861	0.0006%
9	1,032	$405,368,222	$14,294	0.0035%
10	1,043	$903,991,552	$2,169	0.0002%
11	1,268	$312,243,756	$1,735	0.0006%
12	1,308	$172,009,935	$607	0.0004%
13	1,421	$533,349,084	$3,514	0.0007%
14	1,446	$622,195,000	$6,507	0.0010%

Since the cost of the SFAR is less than one percent for each of the 14 small-entity operators, I certify that this SFAR will not have a significant economic impact on a substantial number of small entities.

International Trade Impact Assessment

The Trade Agreements Act of 1979 (Pub. L. 96–39), as amended by the Uruguay Round Agreements Act (Pub. L. 103–465), prohibits Federal agencies from establishing standards or engaging in related activities that create unnecessary obstacles to the foreign commerce of the United States. Pursuant to these Acts, the establishment of standards is not considered an unnecessary obstacle to the foreign commerce of the United States, so long as the standard has a legitimate domestic objective, such the protection of safety, and does not operate in a manner that excludes imports that meet this objective. The statute also requires consideration of international standards and, where appropriate, that they be the basis for U.S. standards.

The FAA has assessed the potential effect of this rule and determined that as the objective of this rule is aviation safety and it does not exclude imports, the rule does not create unnecessary obstacles to foreign commerce.

Unfunded Mandates Assessment

Title II of the Unfunded Mandates Reform Act of 1995 (Pub. L. 104–4) requires each Federal agency to prepare a written statement assessing the effects of any Federal mandate in a proposed or final agency rule that may result in an expenditure of $100 million or more (in 1995 dollars) in any one year by State, local, and Tribal governments, in the aggregate, or by the private sector; such a mandate is deemed to be a "significant regulatory action." The FAA currently uses an inflation-adjusted value of $143.1 million in lieu of $100 million.

This rule does not contain such a mandate. Therefore, the requirements of Title II of the Act do not apply.

Executive Order 13132, Federalism

The FAA has analyzed this interim rule under the principles and criteria of Executive Order 13132, Federalism. The agency determined that this action will not have a substantial direct effect on the States, or the relationship between the Federal Government and the States, or on the distribution of power and responsibilities among the various levels of government, and, therefore, does not have Federalism implications.

Regulations Affecting Intrastate Aviation in Alaska

Section 1205 of the FAA Reauthorization Act of 1996 (110 Stat. 3213) requires the FAA, when modifying its regulations in a manner affecting intrastate aviation in Alaska, to consider the extent to which Alaska is not served by transportation modes other than aviation, and to establish appropriate regulatory distinctions. We have determined that there is no need to make any regulatory distinctions applicable to intrastate aviation in Alaska.

Environmental Analysis

FAA Order 1050.1E identifies FAA actions that are categorically excluded from preparation of an environmental assessment or environmental impact statement under the National Environmental Policy Act in the absence of extraordinary circumstances. The FAA has determined this rulemaking action qualifies for the categorical exclusion identified in paragraph 4j and involves no extraordinary circumstances.

Regulations That Significantly Affect Energy Supply, Distribution, or Use

The FAA analyzed this interim rule under Executive Order 13211, Actions

Concerning Regulations that Significantly Affect Energy Supply, Distribution, or Use (May 18, 2001). The agency has determined that it is not a "significant energy action" under the executive order and it is not likely to have a significant adverse effect on the supply, distribution, or use of energy.

How To Obtain Additional Information

Rulemaking Documents

An electronic copy of a rulemaking document my be obtained by using the Internet—

1. Search the Federal eRulemaking Portal (*http://www.regulations.gov*);

2. Visit the FAA's Regulations and Policies Web page at *http://www.faa.gov/regulations_policies/* or

3. Access the Government Printing Office's Web page at *http://www.gpoaccess.gov/fr/index.html.*

Copies may also be obtained by sending a request (identified by amendment or docket number of this rulemaking) to the Federal Aviation Administration, Office of Rulemaking, ARM–1, 800 Independence Avenue SW., Washington, DC 20591, or by calling (202) 267–9680.

Small Business Regulatory Enforcement Fairness Act

The Small Business Regulatory Enforcement Fairness Act (SBREFA) of 1996 requires FAA to comply with small entity requests for information or advice about compliance with statutes and regulations within its jurisdiction. A small entity with questions regarding this document, may contact its local FAA official, or the person listed under the **FOR FURTHER INFORMATION CONTACT** heading at the beginning of the preamble. To find out more about SBREFA on the Internet, visit *http://www.faa.gov/regulations_policies/rulemaking/sbre_act/.*

List of Subjects

14 CFR Part 21

Aircraft, Aviation safety, Exports, Imports, Reporting and recordkeeping requirements.

14 CFR Part 25

Aircraft, Aviation safety, Reporting and recordkeeping requirements.

14 CFR Part 121

Air carriers, Aircraft, Airmen, Aviation safety, Charter flights, Reporting and recordkeeping requirements, Safety, Transportation.

14 CFR Part 129

Air carriers, Aircraft, Aviation safety, Reporting and recordkeeping requirements, Security measures, Smoking.

The Amendments

In consideration of the foregoing, the Federal Aviation Administration amends chapter I of Title 14, Code of Federal Regulations as follows:

PART 21—CERTIFICATION PROCEDURES FOR PRODUCTS AND PARTS

■ 1. The authority for part 21 continues to read as follows:

Authority: 42 U.S.C. 7572; 49 U.S.C. 106(g), 40105, 40113, 44701–44702, 44704, 44707, 44709, 44711, 44713, 44715, 45303.

■ 2. Amend part 21 by adding subpart P, consisting of § 21.700, to read as follows:

Subpart P—Special Federal Aviation Regulations

§ 21.700 SFAR No. 111—Lavatory Oxygen Systems.

The requirements of § 121.1500 of this chapter also apply to this part.

PART 25—AIRWORTHINESS STANDARDS: TRANSPORT CATEGORY AIRPLANES

■ 3. The authority for part 25 continues to read as follows:

Authority: 49 U.S.C. 106(g), 40113, 44701, 44702 and 44704.

■ 4. Amend part 25 by adding subpart I, consisting of § 25.1801, to read as follows:

Subpart I—Special Federal Aviation Regulations

§ 25.1801 SFAR No. 111—Lavatory Oxygen Systems.

The requirements of § 121.1500 of this chapter also apply to this part.

PART 121—OPERATING REQUIREMENTS: DOMESTIC, FLAG, AND SUPPLEMENTAL OPERATIONS

■ 5. The authority citation for part 121 continues to read as follows:

Authority: 49 U.S.C. 106(g), 1153, 40113, 40119, 41706, 44101, 44701–44702, 44705, 44709–44711, 44713, 44716–44717, 44722, 44901, 44903–44904, 44912, 46105.

■ 6. Add subpart DD, consisting of § 121.1500, to read as follows:

Subpart DD—Special Federal Aviation Regulations

§ 121.1500 SFAR No. 111—Lavatory Oxygen Systems.

(a) *Applicability.* This SFAR applies to the following persons:

(1) All operators of transport category airplanes that are equipped with any chemical oxygen generator installed in any lavatory that are engaged in passenger-carrying operations and that:

(i) Operate under 14 CFR part 121; or

(ii) Operate U.S.-registered airplanes with a maximum passenger capacity of 20 or greater under 14 CFR part 129.

(2) Applicants for airworthiness certificates.

(3) Holders of production certificates.

(4) Applicants for type certificates, including changes to type certificates.

(b) *Regulatory Relief.* Contrary provisions of 14 CFR part 21, and 14 CFR 25.1447, 119.51, 121.329, 121.333 and 129.13, notwithstanding, for the duration of this SFAR:

(1) A person described in paragraph (a) of this section may conduct flight operations and add airplanes to operations specifications with disabled lavatory oxygen systems, modified in accordance with FAA Airworthiness Directive 2011–04–09, subject to the following limitations:

(i) This relief is limited to regulatory compliance of lavatory oxygen systems.

(ii) Within 30 days of the effective date of this SFAR, all oxygen masks must be removed from affected lavatories, and the mask stowage location must be reclosed.

(iii) Within 60 days of the effective date of this SFAR each affected operator must verify that crew emergency procedures specifically include a visual check of the lavatory as a priority when checking the cabin following any event where oxygen masks were deployed in the cabin.

(2) An applicant for an airworthiness certificate may obtain an airworthiness certificate for airplanes to be operated by a person described in paragraph (a) of this section, although the airplane lavatory oxygen system is disabled.

(3) A holder of a production certificate may apply for an airworthiness certificate or approval for airplanes to be operated by a person described in paragraph (a) of this section.

(4) An applicant for a type certificate or change to a type certificate may obtain a design approval without showing compliance with § 25.1447(c)(1) of this chapter for lavatory oxygen systems, in accordance with this SFAR.

(5) Each person covered by paragraph (a) of this section may inform passengers that the lavatories are not equipped with supplemental oxygen.

(c) *Return to Service Documentation.* When a person described in paragraph (a) of this section has modified airplanes as required by Airworthiness Directive

2011–04–09, the affected airplanes must be returned to service with a note in the airplane maintenance records that the modification was done under the provisions of this SFAR.

(d) *Expiration.* This SFAR will remain in effect until further action.

PART 129—OPERATIONS: FOREIGN AIR CARRIERS AND FOREIGN OPERATORS OF U.S.-REGISTERED AIRCRAFT ENGAGED IN COMMON CARRIAGE

■ 7. The authority citation for part 129 continues to read as follows:

Authority: 49 U.S.C. 1372, 40113, 40119, 44101, 44701–44702, 44705, 44709–44711, 44713, 44716–44717, 44722, 44901–44904, 44906, 44912, 46105, Pub. L. 107–71 sec. 104.

■ 8. Amend part 129 by adding subpart C, consisting of § 129.201, to read as follows:

Subpart C—Special Federal Aviation Regulations

§ 129.201 SFAR No. 111—Lavatory Oxygen Systems.

The requirements of § 121.1500 of this chapter also apply to this part.

Issued in Washington, DC, on March 4, 2011.

J. Randolph Babbitt,

Administrator.

[FR Doc. 2011–5325 Filed 3–7–11; 8:45 am]

BILLING CODE 4910–13–P

DEPARTMENT OF TRANSPORTATION

Federal Aviation Administration

14 CFR Part 39

[Docket No. FAA–2011–0157; Directorate Identifier 2010–NM–261–AD; Amendment 39–16630; AD 2011–04–09]

RIN 2120–AA64

Airworthiness Directives; Various Transport Category Airplanes Equipped With Chemical Oxygen Generators Installed in a Lavatory

AGENCY: Federal Aviation Administration (FAA), Department of Transportation (DOT).

ACTION: Final rule; request for comments.

SUMMARY: This document publishes in the **Federal Register** an amendment adopting airworthiness directive (AD) 2011–04–09 that was sent previously by individual notices to the known U.S. owners and operators of affected airplanes identified above. This AD requires modifying the chemical oxygen generators in the lavatory. This AD was prompted by reports that the current design of these oxygen generators presents a hazard that could jeopardize flight safety. We are issuing this AD to eliminate this hazard.

DATES: This AD becomes effective March 14, 2011 to all persons except those persons to whom it was made immediately effective by AD 2011–04–09, which contained the requirements of this amendment.

We must receive comments on this AD by April 22, 2011.

ADDRESSES: You may send comments by any of the following methods:

- *Federal eRulemaking Portal:* Go to *http://www.regulations.gov.* Follow the instructions for submitting comments.
- *Fax:* 202–493–2251.
- *Mail:* U.S. Department of Transportation, Docket Operations, M–30, West Building Ground Floor, Room W12–140, 1200 New Jersey Avenue, SE., Washington, DC 20590.
- *Hand Delivery:* U.S. Department of Transportation, Docket Operations, M–30, West Building Ground Floor, Room W12–140, 1200 New Jersey Avenue, SE., Washington, DC 20590, between 9 a.m. and 5 p.m., Monday through Friday, except Federal holidays.

Examining the AD Docket

You may examine the AD docket on the Internet at *http://www.regulations.gov;* or in person at the Docket Management Facility between 9 a.m. and 5 p.m., Monday through Friday, except Federal holidays. The AD docket contains this AD, the regulatory evaluation, any comments received, and other information. The street address for the Docket Office (telephone 800–647–5527) is in the **ADDRESSES** section. Comments will be available in the AD docket shortly after receipt.

FOR FURTHER INFORMATION CONTACT: Jeff Gardlin, Aerospace Engineer, Cabin Safety Branch, ANM–115, FAA, Transport Airplane Directorate, 1601 Lind Avenue, SW., Renton, Washington 98057–3356; telephone 425–227–2136; fax 425–227–1149; e-mail *jeff.gardlin@faa.gov;* or

Robert Hettman, Aerospace Engineer, Propulsion and Mechanical Systems Branch, ANM–112, FAA, Transport Airplane Directorate, 1601 Lind Avenue, SW., Renton, Washington 98057–3356; telephone (425) 227–2683; fax (425) 227–1149; e-mail *robert.hettman@faa.gov.*

SUPPLEMENTARY INFORMATION: On February 10, 2011, we issued AD 2011–04–09, which applies to certain passenger-carrying transport category airplanes operating in 14 CFR part 121 air carrier service; or U.S.-registered and operating under 14 CFR part 129, with a maximum passenger capacity of 20 or greater; and equipped with any chemical oxygen generator installed in any lavatory.

Background

This AD was prompted by reports that the current design of these oxygen generators presents a hazard that could jeopardize flight safety. We are issuing this AD to eliminate this hazard.

FAA's Determination and Requirements of This AD

Since the unsafe condition described is likely to exist or develop on other airplanes of the same type design, we issued AD 2011–04–09 to eliminate a hazard with chemical oxygen generators in the lavatory, which, if not corrected, could jeopardize flight safety. The AD requires either activating all chemical oxygen generators in the lavatories until the generator oxygen supply is expended, or removing the oxygen generator(s); and, for each chemical oxygen generator, after the generator is expended (or removed), removing or re-stowing the oxygen masks and closing the mask dispenser door.

We have determined that notice and opportunity for prior public comment on AD 2011–04–09 were contrary to the public interest, and good cause existed to make the AD effective immediately by individual notices issued on February 10, 2011, to the known U.S. owners and operators of certain passenger-carrying transport category airplanes operating in 14 CFR part 121 air carrier service; or U.S.-registered and operating under 14 CFR part 129, with a maximum passenger capacity of 20 or greater; and equipped with any chemical oxygen generator installed in any lavatory.

These conditions still exist, and the AD is hereby published in the **Federal Register** as an amendment to section 39.13 of the Federal Aviation Regulations (14 CFR 39.13) to make it effective to all persons.

Differences Between This Federal Register Version and the Individual Notices

This **Federal Register** version of the AD is different from the individual notices previously issued. These individual notices contained a time-limited flight crew notification procedure. This procedure required that the pilot in command be notified that the oxygen generators in the lavatories had been rendered inoperative, and instructed the pilot in command to brief the crew that in the event of a rapid

decompression the lavatories needed to be checked. Since flight crews have been made aware of this AD by the actions in the individual notices, and these procedures were to be applied for a limited time (30 days) only, the procedures are considered no longer necessary, and are not included in this AD. Flight crews are still made aware of corrective actions taken as a result of this AD since maintenance activities are recorded and available to the flight crew using existing maintenance procedures.

Related Rulemaking

We are currently planning to issue a special Federal Aviation Regulation (SFAR) to address the regulatory compliance issues resulting from carrying out the actions required by this AD until the type certification and operational rules are modified.

This AD is applicable to U.S.-registered transport category airplanes operating under 14 CFR part 129 as identified in paragraph (c) of this AD. We will monitor actions taken by other airworthiness authorities to implement the requirements of this AD into their own fleets to determine if additional rulemaking actions are necessary.

Action by the State of Design

This AD is applicable to all transport category airplanes identified in paragraph (c) of this AD. For the purposes of the FAA's responsibility to notify other airworthiness authorities of continued airworthiness issues under International Civil Aviation Organization (ICAO) Annex 8, this AD is considered an action by the State of Design for United States products.

Comments Invited

This AD is a final rule that involves requirements affecting flight safety, and we did not provide you with notice and an opportunity to provide your comments before it becomes effective. However, we invite you to send any written data, views, or arguments about this AD. Send your comments to an address listed under the **ADDRESSES** section. Include "Docket No. FAA–2011–0157; Directorate Identifier 2010–NM–261–AD" at the beginning of your comments. We specifically invite comments on the overall regulatory, economic, environmental, and energy aspects of this AD. We will consider all comments received by the closing date and may amend this AD because of those comments.

We will post all comments we receive, without change, to *http://www.regulations.gov,* including any personal information you provide. We will also post a report summarizing each substantive verbal contact we receive about this AD.

Authority for This Rulemaking

Title 49 of the United States Code specifies the FAA's authority to issue rules on aviation safety. Subtitle I, Section 106, describes the authority of the FAA Administrator. Subtitle VII, Aviation Programs, describes in more detail the scope of the Agency's authority.

We are issuing this rulemaking under the authority described in subtitle VII, part A, subpart III, section 44701, "General requirements." Under that section, Congress charges the FAA with promoting safe flight of civil aircraft in air commerce by prescribing regulations for practices, methods, and procedures the Administrator finds necessary for safety in air commerce. This regulation is within the scope of that authority because it addresses an unsafe condition that is likely to exist or develop on products identified in this rulemaking action.

Regulatory Findings

This AD will not have federalism implications under Executive Order 13132. This AD will not have a substantial direct effect on the States, on the relationship between the national government and the States, or on the distribution of power and responsibilities among the various levels of government.

For the reasons discussed above, I certify that this AD:

(1) Is not a "significant regulatory action" under Executive Order 12866,

(2) Is not a "significant rule" under DOT Regulatory Policies and Procedures (44 FR 11034, February 26, 1979), and

(3) Will not have a significant economic impact, positive or negative, on a substantial number of small entities under the criteria of the Regulatory Flexibility Act.

You can find our regulatory evaluation and the estimated costs of compliance in the AD Docket.

List of Subjects in 14 CFR Part 39

Air transportation, Aircraft, Aviation safety, Incorporation by reference, Safety.

Adoption of the Amendment

Accordingly, under the authority delegated to me by the Administrator, the FAA amends 14 CFR part 39 as follows:

PART 39—AIRWORTHINESS DIRECTIVES

■ 1. The authority citation for part 39 continues to read as follows:

Authority: 49 U.S.C. 106(g), 40113, 44701.

§ 39.13 [Amended]

■ 2. The FAA amends § 39.13 by adding the following new airworthiness directive (AD):

2011–04–09 Transport Category Airplanes: Amendment 39–16630. Docket No. FAA–2011–0157; Directorate Identifier 2010–NM–261–AD.

Effective Date

(a) This AD becomes effective March 14, 2011, to all persons except those persons to whom it was made immediately effective by AD 2011–04–09, issued on February 10, 2011, which contained the requirements of this amendment.

Affected ADs

(b) None.

Applicability

(c) This AD applies to transport category airplanes, in passenger-carrying operations, that are equipped with any chemical oxygen generator installed in any lavatory, and are:

(1) Operating under 14 CFR part 121; or

(2) U.S.-registered and operating under 14 CFR part 129, with a maximum passenger capacity of 20 or greater.

Subject

(d) Joint Aircraft System Component (JASC)/Air Transport Association (ATA) of America Code 35, Oxygen.

Unsafe Condition

(e) This AD was prompted by reports that the current design of chemical oxygen generators in the lavatories presents a hazard that could jeopardize flight safety. We are issuing this AD to eliminate this hazard.

Compliance

(f) Comply with this AD within the compliance times specified, unless already done.

Oxygen Generator Deactivation

(g) Within 21 days after the effective date of this AD, do the actions specified in paragraphs (g)(1) and (g)(2) of this AD.

(1) Activate all chemical oxygen generators in the lavatories until the generator oxygen supply is expended. An operator may also remove the oxygen generator(s), in accordance with existing maintenance practice, in lieu of activating it.

(2) For each chemical oxygen generator, after the generator is expended (or removed), remove or re-stow the oxygen masks and close the mask dispenser door.

Note 1: Chemical oxygen generators are considered a hazardous material and subject to specific requirements under Title 49 CFR for shipping. Oxygen generators must be expended prior to disposal but are considered a hazardous waste; therefore, disposal must be in accordance with all Federal, State, and local regulations. Expended oxygen generators are forbidden in air transportation as cargo. For more information, contact 1–800–HMR–4922.

Note 2: Design approval holders are not expected to release service instructions for this action.

Compliance with Federal Aviation Regulations

(h) Notwithstanding the requirements of Sections 25.1447, 121.329, 121.333, and 129.13 of the Federal Aviation Regulations (14 CFR 25.1447, 121.329, 121.333, and 129.13), operators complying with this AD are authorized to operate affected airplanes until this action is superseded by other rulemaking.

Parts Installation

(i) After the effective date of this AD, no person may install a chemical oxygen generator in any lavatory on any affected airplane.

Special Flight Permit

(j) Special flight permits, as described in Section 21.197 and Section 21.199 of the Federal Aviation Regulations (14 CFR 21.197 and 21.199), are not allowed.

Alternative Methods of Compliance (AMOCs)

(k)(1) The Manager, Transport Standards Staff, ANM–110, FAA, has the authority to approve AMOCs for this AD, if requested using the procedures found in 14 CFR 39.19. Send information to an individual identified in either paragraph (k)(1)(i) or (k)(1)(ii) of this AD.

(i) Jeff Gardlin, Aerospace Engineer, Cabin Safety Branch, ANM–115, FAA, Transport Airplane Directorate, 1601 Lind Avenue, SW., Renton, Washington 98057–3356; telephone (425) 227–2136; fax (425) 227–1149; e-mail *jeff.gardlin@faa.gov.*

(ii) Robert Hettman, Aerospace Engineer, Propulsion and Mechanical Systems Branch, ANM–112, FAA, Transport Airplane Directorate, 1601 Lind Avenue, SW., Renton, Washington 98057–3356; telephone (425) 227–2683; fax (425) 227–1149; e-mail *robert.hettman@faa.gov.*

(2) Before using any approved AMOC, notify your appropriate principal inspector or, lacking a principal inspector, the manager of the local flight standards district office/ certificate holding district office.

Contact Information

(l) For technical information about this AD, contact:

(1) Jeff Gardlin, Aerospace Engineer, Cabin Safety Branch, ANM–115, FAA, Transport Airplane Directorate, 1601 Lind Avenue, SW., Renton, Washington 98057–3356; telephone (425) 227–2136; fax (425) 227–1149; e-mail *jeff.gardlin@faa.gov.*

(2) Robert Hettman, Aerospace Engineer, Propulsion and Mechanical Systems Branch, ANM–112, FAA, Transport Airplane Directorate, 1601 Lind Avenue, SW., Renton, Washington 98057–3356; telephone (425) 227–2683; fax (425) 227–1149; e-mail *robert.hettman@faa.gov.*

(m) For FAA Flight Standards information about this AD, contact the manager at your local certificate management office (CMO) or certificate management team (CMT).

Issued in Renton, Washington, on March 2, 2011.

Ali Bahrami,

Manager, Transport Airplane Directorate, Aircraft Certification Service.

[FR Doc. 2011–5292 Filed 3–7–11; 8:45 am]

BILLING CODE 4910–13–P

DEPARTMENT OF TRANSPORTATION

Federal Aviation Administration

14 CFR Part 73

[Docket No. FAA–2011–0055; Airspace Docket No. 11–AAL–2]

Amendment to Special Use Airspace Restricted Areas R–2203, and R–2205; Alaska

AGENCY: Federal Aviation Administration (FAA), DOT.

ACTION: Final rule; technical amendment.

SUMMARY: This action amends the using agency of Restricted Areas R–2203 A, B, & C; Eagle River, AK, and R–2205, Stuart Creek, AK. These changes reflect the U.S. Army's current organization in Alaska. There are no changes to the boundaries, designated altitudes, time of designation, or activities conducted within the affected restricted areas.

DATES: Effective Date 0901 UTC, May 5, 2011.

FOR FURTHER INFORMATION CONTACT: Ken McElroy, Airspace, Regulations and ATC Procedures Group, Office of Mission Support Services, Federal Aviation Administration, 800 Independence Avenue, SW., Washington, DC 20591; telephone: (202) 267–8783.

SUPPLEMENTARY INFORMATION:

The Rule

This action amends Title 14 Code of Federal Regulations (14 CFR) part 73 by changing the R–2203 and R–2205 using agency of Special Use Airspace to, "U.S. Army, AK (USARAK), Commanding General, Fort Richardson, AK". This is an administrative change and does not affect the boundaries, or operating requirements of the airspace, therefore, notice and public procedures under 5 U.S.C. 533(b) is unnecessary.

Section 73.22 of Title 14 CFR part 73 was republished in FAA Order 7400.8S, effective February 16, 2010.

The FAA has determined that this regulation only involves an established body of technical regulations for which frequent and routine amendments are necessary to keep them operationally current. Therefore, this regulation: (1) Is not a "significant regulatory action" under Executive Order 12866; (2) is not a "significant rule" under Department of Transportation (DOT) Regulatory Policies and Procedures (44 FR 11034; February 26, 1979); and (3) does not warrant preparation of a regulatory evaluation as the anticipated impact is so minimal. Since this is a routine matter that will only affect air traffic procedures and air navigation, it is certified that this rule, when promulgated, will not have a significant economic impact on a substantial number of small entities under the criteria of the Regulatory Flexibility Act.

The FAA's authority to issue rules regarding aviation safety is found in Title 49 of the United States Code. Subtitle I, section 106 describes the authority of the FAA Administrator. Subtitle VII, Aviation Programs, describes in more detail the scope of the agency's authority.

This rulemaking is promulgated under the authority described in subtitle VII, part A, subpart I, section 40103. Under that section, the FAA is charged with prescribing regulations to assign the use of the airspace necessary to ensure the safety of aircraft and the efficient use of airspace. This regulation is within the scope of that authority as it amends Restricted Areas in Alaska.

Environmental Review

The FAA has determined that this action qualifies for categorical exclusion under the National Environmental Policy Act in accordance with 311d, FAA Order 1050.1E, "Environmental Impacts: Policies and Procedures." This airspace action is not expected to cause any potentially significant environmental impacts, and no extraordinary circumstances exist that warrant preparation of an environmental assessment.

List of Subjects in 14 CFR Part 73

Airspace, Prohibited areas, Restricted areas.

The Amendment

In consideration of the foregoing, the Federal Aviation Administration amends 14 CFR part 73 as follows:

PART 73—SPECIAL USE AIRSPACE

■ 1. The authority citation for part 73 continues to read as follows:

Authority: 49 U.S.C. 106(g), 40103, 40113, 40120; E.O. 10854, 24 FR 9565, 3 CFR, 1959–1963 Comp., p. 389.

§ 73.22 [Amended]

■ 2. Section 73.22 is amended as follows:

* * * * *

R–2203A Eagle River, AK [Amended]

By removing the existing Using Agency information and substituting the following:

Using agency. U.S. Army, AK (USARAK), Commanding General, Fort Richardson, AK.

R–2203B Eagle River, AK [Amended]

By removing the existing Using Agency information and substituting the following:

Using agency. U.S. Army, AK (USARAK), Commanding General, Fort Richardson, AK.

R–2203C Eagle River, AK [Amended]

By removing the existing Using Agency information and substituting the following:

Using agency. U.S. Army, AK (USARAK), Commanding General, Fort Richardson, AK.

* * * * *

R–2205 Stuart Creek, AK [Amended]

By removing the existing Using Agency information and substituting the following:

Using agency. U.S. Army, AK (USARAK), Commanding General, Fort Richardson, AK.

Issued in Washington, DC, on March 2, 2011.

Rodger A. Dean,

Acting Manager, Airspace, Regulations and ATC Procedures Group.

[FR Doc. 2011–5246 Filed 3–7–11; 8:45 am]

BILLING CODE 4910–13–P

DEPARTMENT OF TRANSPORTATION

Federal Aviation Administration

14 CFR Part 121

[Docket No.: FAA–2002–11301; Amendment No. 121–315A]

RIN 2120–AH14

Antidrug and Alcohol Misuse Prevention Programs for Personnel Engaged in Specified Aviation Activities; Supplemental Regulatory Flexibility Determination

AGENCY: Federal Aviation Administration (FAA), DOT.

ACTION: Final rule; supplemental regulatory flexibility determination.

SUMMARY: This document announces the completion and availability of a supplemental regulatory flexibility determination for a previously published final rule. That final rule amended the FAA regulations governing drug and alcohol testing to clarify that each person who performs a safety-sensitive function for a regulated employer by contract, including bysubcontract at any tier, is subject to testing.

DATES: Submit comments on or before May 9, 2011.

ADDRESSES: Send comments identified by docket number 2002–11301 using any of the following methods:

- *Federal eRulemaking Portal*: Go to *http://www.regulations.gov* and follow the online instructions for sending your comments electronically.
- *Mail:* Send comments to Docket Operations, M–30; U.S. Department of Transportation (DOT), 1200 New Jersey Avenue, SE., Room W12–140, West Building Ground Floor, Washington, DC 20590–0001.
- *Hand Delivery or Courier:* Take comments to Docket Operations in Room W12–140 of the West Building Ground Floor at 1200 New Jersey Avenue, SE., Washington, DC, between 9 a.m. and 5 p.m., Monday through Friday, except Federal holidays.
- *Fax:* Fax comments to Docket Operations at 202–493–2251.

Privacy: The FAA will post all comments it receives, without change, to *http://www.regulations.gov*, including any personal information the commenter provides. Using the search function of the docket Web site, anyone can find and read the electronic form of all comments received into any FAA dockets, including the name of the individual sending the comment (or signing the comment for an association, business, labor union, *etc.*). DOT's complete Privacy Act Statement can be found in the **Federal Register** published on April 11, 2000 (65 FR 19477–19478), as well as at *http://DocketsInfo.dot.gov*.

Docket: Background documents or comments received may be read at *http://www.regulations.gov* at any time. Follow the online instructions for accessing the docket or Docket Operations in Room W12–140 of the West Building Ground Floor at 1200 New Jersey Avenue, SE., Washington, DC, between 9 a.m. and 5 p.m., Monday through Friday, except Federal holidays.

FOR FURTHER INFORMATION CONTACT: Nicole Nance, Office of Aviation Policy and Plans, APO–300, Federal Aviation Administration, 800 Independence Avenue, SW., Washington, DC 20591; telephone (202) 267–3311; e-mail *nicole.nance@faa.gov.* For legal questions concerning this document, contact Anne Bechdolt, Regulations Division, AGC–220, Office of the Chief Counsel, Federal Aviation Administration, 800 Independence Avenue, SW., Washington, DC 20591; telephone (202) 267–7230; e-mail *anne.bechdolt@faa.gov.*

SUPPLEMENTARY INFORMATION:

Background

On February 28, 2002, the FAA issued a notice of proposed rulemaking seeking to revise the drug and alcohol testing regulations by amending the definition of employee (67 FR. 9366, 9377, Feb. 28, 2002). The FAA action addressed those individuals performing safety-sensitive functions under contract who may not have been subject to testing under the drug and alcohol testing regulations established in 1988 and 1994, respectively. Upon review of comments, the FAA, in 2004, issued a supplemental notice of proposed rulemaking to seek comment regarding how small entities would be impacted by this rule (69 FR 27980, May 17, 2004). From the comments received the FAA believed that the rule would not have a significant impact on a substantial number of small entities.

On January 10, 2006, the FAA issued the final rule (71 FR 1666). This rule requires that each person who performs a safety-sensitive aviation function directly for an employer is subject to testing and that each person who performs a safety-sensitive function at any tier of a contract for that employer is also subject to testing. This requirement includes contractors and subcontractors. Contracting companies have two testing options: Option one is for the contracting company to obtain and implement its own FAA drug and alcohol (D&A) testing programs. Under this option, the company would subject the individuals to testing. The other option is for the regulated employer to maintain its own testing programs and subject the individual to testing under these programs. To establish a D&A program a company would need to develop and maintain testing, training, and annual reporting requirements.

To comply with the Regulatory Flexibility Analysis (RFA), and to evaluate the impact on small businesses, the FAA described and estimated the number of affected businesses and estimated the economic impact. In the final regulatory flexibility analysis the FAA estimated that the costs were minimal, and that contractors would absorb some of these costs. In order to estimate the maximum impact of this regulation on regulated entities the FAA assumed that all of the additional cost would be passed along to regulated employers. Since costs were minimal, the FAA again certified that the rule would not have a significant economic impact on a substantial number of small entities. 71 FR 1666, 1674 (Jan. 10, 2006)

The Aeronautical Repair Station Association, Inc., (ARSA) and other affected businesses challenged the final rule on several grounds, including the FAA's compliance with the Regulatory Flexibility Act. The entities argued that contractors and subcontractors were directly affected by the final rule, and in failing to consider them in the final

regulatory flexibility analysis, the FAA failed to comply with the RFA. Upon review, the U.S. Court of Appeals for the District of Columbia upheld "the substance of the 2006 final rule" and remanded "for the limited purpose of conducting the analysis required under the RFA, treating the contractors and subcontractors as regulated entities." The Court found that contractors and subcontractors were directly affected by the final rule and that the FAA failed to comply with the RFA by not considering them in the analysis. To comply with the Court's ruling, the FAA has extended the regulatory flexibility analysis to include contractors and subcontractors as discussed below.

The Regulatory Flexibility Act of 1980 (Pub. L. 96–354) (RFA) establishes "as a principle of regulatory issuance that agencies shall endeavor, consistent with the objectives of the rule and of applicable statutes, to fit regulatory and informational requirements to the scale of the businesses, organizations, and governmental jurisdictions subject to regulation." To achieve this principle, the RFA requires agencies to solicit and consider flexible regulatory proposals and to explain the rationale for their actions to assure that such proposals are given serious consideration." The RFA covers a wide-range of small entities, including small businesses, not-for-profit organizations and small governmental jurisdictions.

Agencies must perform a review to determine whether a rule will have a significant economic impact on a substantial number of small entities. If the agency determines that it will, the agency must prepare a regulatory flexibility analysis as described in the RFA. However, if an agency determines that a rule is not expected to have a significant economic impact on a substantial number of small entities, section 605(b) of the RFA provides that the head of the agency may so certify and a regulatory flexibility analysis is not required. The certification must include a statement providing the factual basis for this determination, and the reasoning should be clear.

Discussion

The Small Business Administration (SBA) has established small business size standards pursuant to the Small Business Act (Act) (Pub. L. 85–236, as amended) and related legislative guidelines. Using the NAICS (North American Industrial Classification System) classifications, the SBA classifies "small" businesses based on their employment or annual revenue. For this rule, part 145 certificated repair stations and their subcontractors are considered small businesses as defined by this definition. Repair stations are classified as "Other Support Activities for Air Transport" (488190) with small businesses defined as businesses with annual revenues of $7 million or less. Subcontractors, conversely, overlap several industries and have multiple NAICS codes. The SBA and ARSA provided a list of 21 NAICS codes for suppliers, parts fabricators and metal finishers, among others that may perform safety sensitive repairs and therefore would be considered a subcontractor under the rule. For these NAICS codes the definition of a small business ranges from 500 to 1,000 employees or annual revenues of $7 million or less.

Based upon data compiled by the Transportation Security Administration (TSA) for an aircraft repair station security rule, in the RFA the FAA estimated the number of small business repair stations. TSA used revenue and employment records from Dun & Bradstreet for approximately 2,276 domestic repair stations.[1] From this total they identified 2,123 that reflect small businesses as defined by the SBA. Their analysis indicates that most repair stations are small businesses. Accepting the TSA percentage of small entities for domestic repair stations and our internal data, the FAA has estimated that out of 4,105 domestic U.S. certificated repair stations 3,829 are small businesses with revenues of $7 million or less.

After estimating the number of small entity repair stations, we now focus on describing subcontractors impacted by this rule. In order to provide a description of subcontractors, the FAA examined the submitted list of 21 NAICS codes provided by the SBA and ARSA. There was some duplication in the codes, reducing the actual number of codes to be examined.

During the comment period ARSA not only provided a list of NAICS codes, but they also conducted and provided information on a Non-Certificated Maintenance Subcontractor (NCMS) Survey. Some of the information from the survey proved to be useful in determining the small business impact on subcontractors, particularly the responses to questions 1 (number of employees), 2 (annual revenue), 3 (an existing contract with a U.S. air carrier to perform maintenance), 4 (type of work). These responses are used, in this analysis, to determine the characteristics of these companies.

The FAA finds it appropriate to start with the responses to question 4, which deals with the work-related functions of the respondents, as a snapshot of some of the types of companies that need to be included in this analysis. The FAA grouped the responses to question 4 into the NAICS codes that both ARSA and the SBA provided and the FAA was able to correlate 98 of the 134 survey respondents with these codes; these 98 are shown in Table 1 below. While there are discrepancies with regard to the count, we can validate 98 of the 134 responses. This shows the wide spectrum of businesses providing contracting support.

TABLE 1—SURVEY RESULTS—NAICS CODES AND WORK FUNCTIONS

Number of NCMS	NAICS Code	Work functions	Require D&A program?
1	313311	Fireproofing of fabrics	Y
14	313320	Metallizing (including plating)	S
9	332322	Manufacturing airframe parts (mostly sheet metal)	N
		Manufacturing per approved drawing or data	N
		Manufacturing small parts; some of which are used by part 121 operators	N
23	332710	Chemical milling (reduction of weight)	S
		Machining	S
		Machining and welding of ground support parts for planes	N
		Machining of turbine engine components	S
		Machining; chrome plating; anodize; metal finishing; shot peening	S
3	332722	Manufacturer of miniature turned parts. Screws and like	N

[1] Aircraft Repair Station Security (49 CFR part 1520 and 1554). Regulatory and Economic Analysis: Transportation Security Administration Department of Homeland Security, October 15, 2009.

TABLE 1—SURVEY RESULTS—NAICS CODES AND WORK FUNCTIONS—Continued

Number of NCMS	NAICS Code	Work functions	Require D&A program?
2	332811	Heat treating	Y
1	332812	Painting	Y
8	332813	Chrome plating; nickel plating (metal finishing)	S
		Machining; chrome plating; anodize; metal finishing; shot peening	S
		Metal finishing (grinding) (zinc plating)	S
		Plating; precision grinding; non-destructive testing	S
3	332999	Die-cut parts—shims; washers; gaskets; *etc.*	N
1	334511	Rebuild electro-mechanical switches for aviation use	N
1	336412	Overhauling of engine blocker doors	Y
22	488190	Minor maintenance	Y
		Maintenance on 135 charter aircraft line	Y
		Overhauling of engine blocker doors	Y
5	541380	Calibration and repair of test and measuring equipment	N
		Hydrostatic testing	N
		Inspection	N
		Machining & fabrication of test fixtures & equipment used in repair processes	N
		Non-destructive testing	N
1	561740	Cleaning seat covers	N
4	811310	Machining and welding of ground support parts for planes	N
		Manufacturing & precision grinding and testing of various fuel & hydraulic/pneumatic valve assemblies.	N

Table 1 also indicates whether a specific function would require a D&A program. The last column is either marked with "Y" meaning yes, "N" meaning no, and "S" meaning some in this grouping might need such a program, as this work function conceivably could mandate such a program. Companies that have work that is strictly manufacturing will not be required to comply with the D&A testing rules. Several companies mentioned in their survey responses that they do not perform maintenance, and would not be included among companies required to set up and implement D&A testing. For example, the 14 companies characterized as 313320, which involves metal finishing including plating, may need to conduct D&A testing if some of the work they perform is considered maintenance under 14 CFR part 43.

The responses to questions 1 and 2 address the number of employees and the annual revenue reported by the surveyed companies. These responses are helpful in establishing the type of impact that this program will have on these companies. Question 1 asked "How many employees does your company have?" Table 2 summarizes the responses provided by the ARSA survey. All but two of the responses are in the category of 750 or below. The two responses for "1501+" are outliers and, for computational purposes, can be ignored. Approximately 75% of the respondents stated that they employed between 1 and 50 employees, indicating that the majority of subcontracting companies are small entities.

TABLE 2—SURVEY RESULTS—EMPLOYEES BY COMPANY

Response	Count	Percent
1 to 10	43	32.09
11 to 50	58	43.28
51 to 100	10	7.46
101 to 500	18	13.43
501 to 750	3	2.24
751 to 1000	0	0.00
1001 to 1500	0	0.00
1501+	2	1.49
Total	134	100.00

Question 2 of the survey asked about the company's annual revenues; Table 3 summarizes the survey responses:

TABLE 3—SURVEY RESULTS—ANNUAL REVENUE BY COMPANY

Response	Count	Percent
Under $750,000	43	32.09
$750,000 to $1 million	14	10.45
$1 million to $2 million	20	14.93
$2 million to $6 million	24	17.91
$6 million to $10.5 million	8	5.97
$10.5 million to $21.5 million	7	5.22
$21.5 million to $25 million	1	0.75
$25 million to $30 million	4	2.99
More than $30 million	13	9.70
Total	134	100.00

Most of these companies reported average annual revenue of $7 million or less.

As noted above, ARSA did a survey and 134 members responded; the FAA believes that this is only a fraction of the total number of NCMS. As mentioned above, a small business is defined as having either 1,000 employees or less, or having revenue of $7 million or less, depending on the NAICS code. The majority of the companies in the ARSA survey are small entities which leads the FAA to believe that a substantial number of subcontractors will be small entities impacted by this rule.

The next step is to estimate the economic impact. The FAA rule requires small businesses to administer random drug tests to those employees who perform safety-sensitive functions. For a high cost estimate, the FAA based costs on subcontractors initiating and then implementing their own programs. It is important to note that these costs are much higher than when repair stations or contractors at higher tiers absorb some of the cost of D&A testing for the smaller firms. Moreover, most repair stations have drug and alcohol programs and therefore would not experience a cost burden based on the amendments to this rule. However, to estimate the maximum impact of this regulation on regulated employers, the FAA assumes that all of the additional cost for D&A testing is absorbed by each NCMS. The costs include: (1) Testing, (2) training and education, (3) program development and maintenance, and (4) annual documentation. The assumptions and calculations are described below:

General Cost and Salary Assumptions

Maintenance supervisor salary—$39.68/hour
Maintenance employee salary—$33.07/hour
Blended Wage [2]—$33.84
Instructor salary—$36.37/hour
1 Supervisor for every 8 employees
1 Instructor for every 20 employees

Testing Cost

Drug and alcohol tests are required periodically for all employees performing safety sensitive functions. The test costs approximately $45 or $35, respectively. The test includes specimen collection, laboratory processing, and MRO (medical review officer) verification. Testing takes place during an employee's shift. This is time not worked but still paid by the company and is included as part of the testing cost. Previously, the FAA estimated that the testing process would take 45 minutes, but because of industry comments the FAA has adopted a 2 hour testing window for this analysis. The total cost of testing is calculated by adding the 2 hour blended wage paid to the employee to the cost of the test. The total cost of testing sums to $113 per employee for a drug test and $102 per employee for an alcohol test.

Training and Education

Training costs are a combination of supervisor and employee training costs, plus the cost to establish and maintain a training program. For both the antidrug and alcohol misuse prevention programs, the employer will train supervisors to make reasonable cause/suspicion determinations. In addition, supervisors and employees will receive training on the effects and consequences of drug use on personal health, safety, and work environment, as well as the manifestations and behavioral cues that may indicate drug use and abuse. For supervisors, this training is initially estimated to take an hour and a half, followed by a recommended annual hourly refresher course. Employee training will also be given annually for approximately an hour. Training costs include the cost of the instructor at $84 per supervisor and $70 per employee.

Companies must also establish an education program that includes informational material, videos, *etc.* Per employee, these costs average $65 per person. Summing all of these together gives an estimated total education and training cost of either $149 per supervisor or $135 per employee per year.

Program Development and Maintenance

Each subcontractor will have to devote resources to developing an antidrug and alcohol misuse prevention testing program. In addition, each of these subcontractors will have to spend time to produce information required for their registration and submit it to the FAA. At the FAA, this information will have to be processed, and entered into the appropriate database. The FAA estimates that development and maintenance of a drug and alcohol program would each require a minimum of 16 administrative hours per program at $21 per hour for a total of $336 per company per year.

Annual Documentation

Each subcontractor has to periodically submit documentation. They will be required to report or submit the following documents; Training records, reasonable suspicion cases of drug and alcohol misuse, a positive drug or alcohol test, an employee's refusal to submit to a drug or alcohol test, post-accident alcohol tests, and, if a post-accident alcohol test is not promptly administered, documentation stating the reasoning behind the delay. The FAA estimates that it will cost $1.29 to report each training record, to document each reasonable suspicious case, or to submit every rationale behind tests not being promptly administered. Notification of a positive drug or alcohol test or an employee's refusal to be tested is estimated to take .25 administrative hours at an hourly rate of $21 at roughly $5 per notification. The FAA projects that these documents will be submitted annually, but each company on average only submits a certain number of reports. Using this average, documentation cost is estimated at $50 per company for the first year and $4.50 per company for subsequent years.

We estimate that the typical subcontracting company has 25 employees. This number comes from Table 2 above, where 75% of the respondents have fewer than 50 employees. Several of the costs are variable costs and are dependent on the number of employees; testing costs, supervisor training, and employee training. For testing and training costs, the FAA multiplied the cost per employee by the average number of employees. For a small subcontracting company with 25 employees we estimate $2,825 for drug tests, $2,550 for alcohol tests, and $3,417 for training. Adding these numbers to per company cost of program development and maintenance and annual documentation costs gives the average cost per-company of $6,628 or $6,353 for drug testing and alcohol testing, respectively. Detailed calculations are done below. This value can be compared to annual revenues to determine the impact on companies with 25 employees. Using the survey results from Table 2 and 3 above, we believe that a subcontracting company with 25 employees will have annual revenues of $750,000 to $2 million. For a company with $750,000 to $2 million in annual revenue estimated costs of $12,981 is less than 2% of their annual revenue. From this example we conclude that even for firms with revenues less than $750,000 per year, if we underestimated the compliance cost by more than 10%, the compliance cost is still less than 2% of their annual revenue. Since most of the costs are employee driven the compliance cost will be less than 2% of annual revenue for all companies.

From this the FAA asserts that although there are a substantial number of small businesses the economic impact is minimal.

Cost for Firms With 25 Employees and Annual Revenue of $750,000 to $2 Million

Cost of Drug Testing Program

$113 Testing Cost × 25 Employees = $2,825
$149 Supervisor Training × 3 Supervisors = $447
$135 Employee Training × 22 Employees = $2,970
$336 Program Development per Company
+$50 for Annual Documentation per Company

Total Cost = $6,628 per Company

Cost of Alcohol Testing Program

$102 Testing Cost × 25 Employees = $2,550
$149 Supervisor Training × 3 Supervisors = $447
$135 Employee Training × 22 Employees = $2970
$336 Program Development per Company = $336
+$50 for Annual Documentation per Company

Total Cost = $6,353 per Company

The FAA is aware that a substantial number of small entities must comply with this rule; however, the percentage of cost to revenue is less that 1 percent, therefore we believe that this rule does

[2] Two of the costs described below, testing costs and employee training costs, involve all employees, both supervisors and non-supervisors. For these two sets of calculations, the FAA uses a weighted wage rate from the maintenance supervisor and maintenance employee salary that is applicable to all employees.

not have a significant economic impact. Therefore the FAA preliminarily certifies that this rule will not have a significant economic impact on a substantial number of small entities.

The FAA solicits comments regarding this determination on this supplemental regulatory flexibility analysis. Please provide detailed economic analysis to support the position of higher cost. The FAA also invites comments regarding other small entity concerns with respect to the final rule.

Nan Shellabarger,

Director, Office of Aviation Policy and Plans.

[FR Doc. 2011–5257 Filed 3–7–11; 8:45 am]

BILLING CODE P

DEPARTMENT OF HEALTH AND HUMAN SERVICES

Food and Drug Administration

21 CFR Parts 1, 14, and 17

[Docket No. FDA–2010–N–0560]

RIN 0910–AG55

Amendments to General Regulations of the Food and Drug Administration; Confirmation of Effective Date

AGENCY: Food and Drug Administration, HHS.

ACTION: Direct final rule; confirmation of effective date.

SUMMARY: The Food and Drug Administration (FDA) is confirming the effective date of April 14, 2011, for the final rule that appeared in the **Federal Register** of November 30, 2010 (75 FR 73951). The direct final rule amends certain general regulations of FDA to include tobacco products, where appropriate, in light of FDA's authority to regulate these products under the Family Smoking Prevention and Tobacco Control Act, by revising the Agency's regulations to require tobacco products to be subject to the same general requirements that apply to other FDA-regulated products. This document confirms the effective date of the direct final rule.

DATES: Effective date confirmed: April 14, 2011.

FOR FURTHER INFORMATION CONTACT: Gerie A. Voss, Center for Tobacco Products, Food and Drug Administration, 9200 Corporate Blvd., rm. 204G, Rockville, MD 20850, 1–877–CTP–1373.

SUPPLEMENTARY INFORMATION: In the **Federal Register** of November 30, 2010 (75 FR 73951), FDA solicited comments concerning the direct final rule for a 75-day period ending February 14, 2011. FDA stated that the effective date of the direct final rule would be on April 14, 2011, 60 days after the end of the comment period, unless any significant adverse comment was submitted to FDA during the comment period. FDA did not receive any significant adverse comments.

Authority: Therefore, under the Federal Food, Drug, and Cosmetic Act and under authority delegated to the Commissioner of Food and Drugs, 21 CFR parts 1, 14, and 17 are amended. Accordingly, the amendments issued thereby are effective.

Dated: March 2, 2011.

Leslie Kux,

Acting Assistant Commissioner for Policy.

[FR Doc. 2011–5147 Filed 3–7–11; 8:45 am]

BILLING CODE 4160–01–P

DEPARTMENT OF HEALTH AND HUMAN SERVICES

Food and Drug Administration

21 CFR Part 520

[Docket No. FDA–2011–N–0003]

Oral Dosage Form New Animal Drugs; Spinosad and Milbemycin Oxime

AGENCY: Food and Drug Administration, HHS.

ACTION: Final rule.

SUMMARY: The Food and Drug Administration (FDA) is amending the animal drug regulations to reflect approval of a new animal drug application (NADA) filed by Elanco Animal Health. The NADA provides for veterinary prescription use of chewable tablets containing spinosad and milbemycin oxime in dogs for the treatment and prevention of flea infestations and for the prevention and control of various internal parasites.

DATES: This rule is effective March 8, 2011.

FOR FURTHER INFORMATION CONTACT: Angela Clarke, Center for Veterinary Medicine (HFV–112), Food and Drug Administration, 7500 Standish Pl., Rockville, MD 20855, 240–276–8318, e-mail: *angela.clarke@fda.hhs.gov.*

SUPPLEMENTARY INFORMATION: Elanco Animal Health, A Division of Eli Lilly & Co., Lilly Corporate Center, Indianapolis, IN 46285, filed NADA 141–321 that provides for veterinary prescription use of TRIFEXIS (spinosad and milbemycin oxime) Chewable Tablets in dogs for the treatment and prevention of flea infestations and for the prevention and control of various internal parasites. The NADA is approved as of January 4, 2011, and the regulations in part 520 (21 CFR part 520) are amended by adding § 520.2134 to reflect the approval.

In accordance with the freedom of information provisions of 21 CFR part 20 and 21 CFR 514.11(e)(2)(ii), a summary of safety and effectiveness data and information submitted to support approval of this application may be seen in the Division of Dockets Management (HFA–305), Food and Drug Administration, 5630 Fishers Lane, rm. 1061, Rockville, MD 20852, between 9 a.m. and 4 p.m., Monday through Friday.

Under section 512(c)(2)(F)(ii) of the Federal Food, Drug, and Cosmetic Act (21 U.S.C. 360b(c)(2)(F)(ii)), this approval qualifies for 3 years of marketing exclusivity beginning on the date of approval.

FDA has determined under 21 CFR 25.33 that this action is of a type that does not individually or cumulatively have a significant effect on the human environment. Therefore, neither an environmental assessment nor an environmental impact statement is required.

This rule does not meet the definition of "rule" in 5 U.S.C. 804(3)(A) because it is a rule of "particular applicability." Therefore, it is not subject to the congressional review requirements in 5 U.S.C. 801–808.

List of Subjects in 21 CFR Part 520

Animal drugs.

Therefore, under the Federal Food, Drug, and Cosmetic Act and under the authority delegated to the Commissioner of Food and Drugs and redelegated to the Center for Veterinary Medicine, 21 CFR part 520 is amended as follows:

PART 520—ORAL DOSAGE FORM NEW ANIMAL DRUGS

■ 1. The authority citation for 21 CFR part 520 continues to read as follows:

Authority: 21 U.S.C. 360b.

■ 2. Add § 520.2134 to read as follows:

§ 520.2134 Spinosad and milbemycin.

(a) *Specifications.* Each chewable tablet contains 140 milligrams (mg) spinosad and 2.3 mg milbemycin oxime, 270 mg spinosad and 4.5 mg milbemycin oxime, 560 mg spinosad and 9.3 mg milbemycin oxime, 810 mg spinosad and 13.5 mg milbemycin oxime, or 1,620 mg spinosad and 27 mg milbemycin oxime.

(b) *Sponsor.* See No. 000986 in § 510.600 of this chapter.

(c) *Conditions of use in dogs*—(1) *Amount.* Administer once a month at a

minimum dosage of 13.5 mg/pound (lb) (30 mg/kilogram (kg)) of body weight spinosad and 0.2 mg/lb (0.5 mg/kg) of body weight milbemycin oxime.

(2) *Indications for use.* To kill fleas; for the prevention and treatment of flea infestations (*Ctenocephalides felis*); for the prevention of heartworm disease (*Dirofilaria immitis*); and for the treatment and control of adult hookworm (*Ancylostoma caninum*), adult roundworm (*Toxocara canis* and *Toxascaris leonina*), and adult whipworm (*Trichuris vulpis*) infections in dogs and puppies 8 weeks of age or older and 5 lbs of body weight or greater.

(3) *Limitations.* Federal law restricts this drug to use by or on the order of a licensed veterinarian.

Dated: March 2, 2011.

Leslie Kux,

Acting Assistant Commissioner for Policy.

[FR Doc. 2011–5144 Filed 3–7–11; 8:45 am]

BILLING CODE 4160–01–P

DEPARTMENT OF AGRICULTURE

Forest Service

36 CFR Part 242

DEPARTMENT OF THE INTERIOR

Fish and Wildlife Service

50 CFR Part 100

[Docket No. FWS–R7–SM–2009–0061; 70101–1261–0000L6]

RIN 1018–AW71

Subsistence Management Regulations for Public Lands in Alaska—2011–12 and 2012–13 Subsistence Taking of Fish and Shellfish Regulations

AGENCIES: Forest Service, Agriculture; Fish and Wildlife Service, Interior.

ACTION: Final rule.

SUMMARY: This final rule establishes regulations for seasons, harvest limits, methods, and means related to taking of fish and shellfish for subsistence uses in Alaska during the 2011–12 and 2012–13 regulatory years. The Federal Subsistence Board (Board) completes the biennial process of revising subsistence hunting and trapping regulations in even-numbered years and subsistence fishing and shellfish regulations in odd-numbered years; public proposal and review processes take place during the preceding year. The Board also addresses customary and traditional use determinations during the applicable biennial cycle. This rulemaking replaces the fish and shellfish taking regulations that expire on March 31, 2011. This rule also revises the address of the Office of Subsistence Management; the new address should be used to obtain maps delineating the boundaries of the subsistence resource regions.

DATES: This rule is effective April 1, 2011.

ADDRESSES: The Board meeting transcripts are available for review at the Office of Subsistence Management, 1011 East Tudor Road, Mail Stop 121, Anchorage, Alaska 99503, or on the Office of Subsistence Management Web site (*http://alaska.fws.gov/asm/index.cfml*).

FOR FURTHER INFORMATION CONTACT: Chair, Federal Subsistence Board, c/o U.S. Fish and Wildlife Service, Attention: Peter J. Probasco, Office of Subsistence Management; (907) 786–3888 or *subsistence@fws.gov*. For questions specific to National Forest System lands, contact Steve Kessler, Subsistence Program Leader, USDA, Forest Service, Alaska Region, (907) 743–9461 or *skessler@fs.fed.us*.

SUPPLEMENTARY INFORMATION:

Background

Under Title VIII of the Alaska National Interest Lands Conservation Act (ANILCA) (16 U.S.C. 3111–3126), the Secretary of the Interior and the Secretary of Agriculture (Secretaries) jointly implement the Federal Subsistence Management Program. This program provides a preference for take of fish and wildlife resources for subsistence uses on Federal public lands and waters in Alaska. The Secretaries published temporary regulations to carry out this program in the **Federal Register** on June 29, 1990 (55 FR 27114), and final regulations were published in the **Federal Register** on May 29, 1992 (57 FR 22940). The Program has subsequently amended these regulations a number of times. Because this program is a joint effort between Interior and Agriculture, these regulations are located in two titles of the Code of Federal Regulations (CFR): Title 36, "Parks, Forests, and Public Property," and Title 50, "Wildlife and Fisheries," at 36 CFR 242.1–28 and 50 CFR 100.1–28, respectively. The regulations contain subparts as follows: Subpart A, General Provisions; Subpart B, Program Structure; Subpart C, Board Determinations; and Subpart D, Subsistence Taking of Fish and Wildlife.

Consistent with subpart B of these regulations, the Secretaries established a Federal Subsistence Board to administer the Federal Subsistence Management Program. The Board is currently made up of:

- A Chair appointed by the Secretary of the Interior with concurrence of the Secretary of Agriculture;
- The Alaska Regional Director, U.S. Fish and Wildlife Service;
- The Alaska Regional Director, U.S. National Park Service;
- The Alaska State Director, U.S. Bureau of Land Management;
- The Alaska Regional Director, U.S. Bureau of Indian Affairs; and
- The Alaska Regional Forester, U.S. Forest Service.

Through the Board, these agencies participate in the development of regulations for subparts C and D, which, among other things, set forth program eligibility and specific harvest seasons and limits.

In administering the program, the Secretaries divided Alaska into 10 subsistence resource regions, each of which is represented by a Regional Advisory Council. The Regional Advisory Councils provide a forum for rural residents with personal knowledge of local conditions and resource requirements to have a meaningful role in the subsistence management of fish and wildlife on Federal public lands in Alaska. The Regional Advisory Council members represent varied geographical, cultural, and user interests within each region.

The Board addresses customary and traditional use determinations during the applicable biennial cycle. Section ___.24 (customary and traditional use determinations) was originally published in the **Federal Register** on May 29, 1992 (57 FR 22940). The regulations at 36 CFR 242.4 and 50 CFR 100.4 define "customary and traditional use" as "a long-established, consistent pattern of use, incorporating beliefs and customs which have been transmitted from generation to generation. * * *" Since 1992, the Board has made a number of customary and traditional use determinations at the request of affected subsistence users. Those modifications, along with some administrative corrections, were published in the **Federal Register** as follows:

MODIFICATIONS TO § ____.24

Federal Register citation	Date of publication	Rule made changes to the following provisions of ____.24
59 FR 27462	May 27, 1994	Wildlife and Fish/Shellfish.
59 FR 51855	October 13, 1994	Wildlife and Fish/Shellfish.
60 FR 10317	February 24, 1995	Wildlife and Fish/Shellfish.
61 FR 39698	July 30, 1996	Wildlife and Fish/Shellfish.
62 FR 29016	May 29, 1997	Wildlife and Fish/Shellfish.
63 FR 35332	June 29, 1998	Wildlife and Fish/Shellfish.
63 FR 46148	August 28, 1998	Wildlife and Fish/Shellfish.
64 FR 1276	January 8, 1999	Fish/Shellfish.
64 FR 35776	July 1, 1999	Wildlife.
65 FR 40730	June 30, 2000	Wildlife.
66 FR 10142	February 13, 2001	Fish/Shellfish.
66 FR 33744	June 25, 2001	Wildlife.
67 FR 5890	February 7, 2002	Fish/Shellfish.
67 FR 43710	June 28, 2002	Wildlife.
68 FR 7276	February 12, 2003	Fish/Shellfish.
Note: The Board met May 20–22, 2003, but did not make any additional customary and traditional use determinations.		
69 FR 5018	February 3, 2004	Fish/Shellfish.
69 FR 40174	July 1, 2004	Wildlife.
70 FR 13377	March 21, 2005	Fish/Shellfish.
70 FR 36268	June 22, 2005	Wildlife.
71 FR 15569	March 29, 2006	Fish/Shellfish.
71 FR 37642	June 30, 2006	Wildlife.
72 FR 12676	March 16, 2007	Fish/Shellfish.
Note: The Board met December 11–13, 2007, but did not make any additional customary and traditional use determinations.		
72 FR 73426	December 27, 2007	Wildlife/Fish.
73 FR 35726	June 26, 2008	Wildlife.
74 FR 14049	March 30, 2009	Fish/Shellfish.
75 FR 37918	June 30, 2010	Wildlife.

Current Rule

The Departments published a proposed rule on January 15, 2010 (75 FR 2448), to amend the fish and shellfish sections of subparts C and D of 36 CFR 242 and 50 CFR 100. The proposed rule opened a comment period, which closed on March 24, 2010. The Departments advertised the proposed rule by mail, radio, and newspaper. During that period, the Regional Councils met and, in addition to other Regional Council business, received suggestions for proposals from the public. The Board received a total of 21 proposals for changes to subparts C and D; this included 2 proposals that the Board had deferred from the previous regulatory cycle. Four proposals were withdrawn by the proponent prior to the start of the public review process. After the comment period closed, the Board prepared a booklet describing the proposals and distributed it to the public. The proposals were also available online. The public then had an additional 30 days in which to comment on the proposals for changes to the regulations.

The 10 Regional Advisory Councils met again, received public comments, and formulated their recommendations to the Board on proposals for their respective regions. The Regional Advisory Councils had a substantial role in reviewing the proposed rule and making recommendations for the final rule. Moreover, a Council Chair, or a designated representative, presented each Council's recommendations at the Board meeting of January 18–20, 2011. These final regulations reflect Board review and consideration of Regional Advisory Council recommendations and public comments. The public received extensive opportunity to review and comment on all changes. In section ____.24(a)(2), corrections to the spelling of certain village names and an updated format have been made, resulting in a more readable document.

Of the 17 proposals, 15 were on the Board's regular agenda and 2 were on the consensus agenda. The consensus agenda is made up of proposals for which there is agreement among the affected Subsistence Regional Advisory Councils, a majority of the Interagency Staff Committee members, and the Alaska Department of Fish and Game concerning a proposed regulatory action. Anyone may request that the Board remove a proposal from the consensus agenda and place it on the non-consensus (regular) agenda. The Board votes en masse on the consensus agenda after deliberation and action on all other proposals. Of the proposals on the consensus agenda, the Board withdrew both proposals based on the request of the proponent. This action was consistent with Board policy and was supported by each of the Regional Advisory Council Chairs in the management area. Analysis and justification for each action are available for review at the Office of Subsistence Management, 1011 East Tudor Road, Mail Stop 121, Anchorage, Alaska 99503, or on the Office of Subsistence Management Web site (*http://alaska.fws.gov/asm/index.cfml*). Of the proposals on the regular agenda, the Board adopted one; adopted three with modification; rejected three; deferred four; took no action on two; and withdrew two based on the request of the proponent. In section ____.22(b) an administrative change was made to reflect the current address of the Office of Subsistence Management.

Summary of Non-Consensus Proposals Not Adopted by the Board

The Board rejected, deferred, withdrew, or took no action on 11 non-consensus proposals. The rejected proposals were recommended for

rejection by one or more of the Regional Advisory Councils unless noted below.

The Board withdrew 2 proposals in the Yukon-Northern Area based on the request of the proponent. This action was consistent with Board policy and was supported by each of the Regional Advisory Council Chairs in the management area.

The Board deferred a proposal in the Yukon-Northern Area to restrict customary trade of Chinook salmon on the Yukon River to allow time for a subcommittee made up of members from the three Yukon River Regional Advisory Councils to try to reach consensus on a recommendation to the Councils. The Board also took no action on a similar proposal based on the action of this proposal.

The Board rejected a proposal in the Yukon-Northern Area to restrict gillnet depth in Federal public waters of the Yukon River based on concerns that this proposal was not supported by substantial evidence and would be detrimental to the satisfaction of subsistence needs for some users.

The Board rejected a proposal in the Yukon-Northern Area to close Federal public waters of the Yukon River to the taking of first pulse Chinook salmon from the mouth to the Canadian border for 12 years. The Board took this action because Federal and State managers already have the authority to take action to close this fishery for conservation concerns and this proposal would be detrimental to the satisfaction of subsistence needs for some users.

The Board deferred a proposal in the Yukon-Northern Area to subdivide an existing subdistrict on the Yukon River. This action would allow for additional public input and time for Federal and State managers to consider possible courses of actions.

The Board took no action on a proposal to extend the sockeye salmon season in the Klawock River drainage and Klawock Lake in the Southeast Alaska Area based on its action on a similar proposal.

The Board deferred a proposal to close the eulachon fishery in sections 1C and 1D of the Southeast Alaska Area to allow time for additional public input and to address conservation concerns. This action was contrary to the Council recommendation, which was to adopt the proposal with modification.

The Board continued a previous deferral on a proposal to close Federal public waters in the Makhnati Island area of Southeast Alaska to the harvest of herring and herring spawn except by Federally qualified users. This action was requested by the Council to allow time for peer review of a study conducted by the Sitka Tribe of Alaska.

The Board rejected a previously deferred proposal in Southeast Alaska to determine a "no Federal subsistence priority" be made for all fish in the Juneau road system area. This action was based on concerns that the proposal was not supported by substantial evidence and would be detrimental to the satisfaction of subsistence needs for users.

Summary of Non-Consensus Proposals Adopted by the Board

The Board adopted or adopted with modification four non-consensus proposals. Modifications were suggested by the affected Regional Council(s), developed during the analysis process, or developed during the Board's public deliberations. All of the adopted proposals were recommended for adoption by at least one of the Regional Councils unless noted below.

Southeast Alaska

The Board adopted a proposal with modification to eliminate the defined sockeye salmon season and fishing schedule in the Klawock River drainage and Klawock Lake to provide additional opportunity for subsistence users.

Kodiak

The Board adopted a proposal to reduce the harvest limit of king crab from six to three per household. This action was based on continuing conservation concerns.

The Board adopted a proposal with modification to eliminate harvest limits associated with subsistence permits issued to Federally qualified subsistence users who fish for salmon in Federal public waters of the Kodiak Area that cannot be accessed from the Kodiak road system, except the mainland district, and changed the recording requirements from immediately upon landing a fish to prior to leaving the fishing site. This action was taken to allow additional opportunity and reduce the burden of reporting for subsistence users.

Chignik

The Board adopted a proposal with modification to expand the areas for subsistence fishing using existing gear types, except gillnets. This action was taken to provide additional opportunity for subsistence users.

Southcentral Alaska—Request for Reconsideration

The Departments published a proposed rule on April 17, 2008 (73 FR 20884), to amend subparts C and D of 36 CFR part 242 and 50 CFR part 100. The proposed rule opened a comment period, which closed on June 30, 2008. The Departments advertised the proposed rule by mail, radio, and newspaper. During that period, the Regional Councils met and, in addition to other Regional Council business, received suggestions for proposals from the public. The Board received a total of 15 proposals for changes to subparts C and D. After the proposal period closed, the Board prepared a booklet describing the proposals and distributed them to the public; this was also available online. The public then had an additional 30 days in which to comment on the proposals for changes to the regulations. The 10 Regional Advisory Councils met again, received public comments, and formulated their recommendations to the Board on proposals for their respective regions. The Regional Advisory Councils had a substantial role in reviewing the proposed rule and making recommendations for the final rule. Moreover, a Council Chair, or a designated representative, presented each Council's recommendations at the Board meeting of January 13–15, 2009. The public had extensive opportunity to review and comment on all changes. One of the proposals rejected by the Board was FP09–07, which requested the Board to recognize a customary and traditional use determination for residents of Ninilchik for resident fish in the Kenai Peninsula District waters north of and including the Kenai River drainage. The Board based its decision on a lack of substantial evidence; this decision was contrary to the modified proposal recommendation of the Southcentral Regional Advisory Council.

On May 29, 2009, as provided for in 36 CFR 242.20 and 50 CFR 100.20, the Ninilchik Traditional Council submitted a request for reconsideration on the Board's decision to reject FP09–07. The Board accepted the request for reconsideration and initiated additional staff analysis and review; after public notice, the Board met again on November 9, 2010, and readdressed this proposal. After recommendations from the applicable Council Chair, comments from the Alaska Department of Fish and Game, and members of the public, the Board rescinded its earlier decision and recognized a customary and traditional use determination for residents of Ninilchik for all fish in the Kenai Peninsula District waters north of and including the Kenai River drainage. The Board based its decision on the available information on the residents of

Ninilchik's use of resident fish species in the Kenai River area, the opportunistic nature of subsistence uses, and the demonstrated history of fishing activities by Ninilchik residents, and concluded that Ninilchik residents have customarily and traditionally used resident fish species in the river.

These final regulations reflect Board review and consideration of Regional Council recommendations and public comments. Because this rule concerns public lands managed by an agency or agencies in both the Departments of Agriculture and the Interior, identical text will be incorporated into 36 CFR part 242 and 50 CFR part 100.

Conformance With Statutory and Regulatory Authorities

Administrative Procedure Act Compliance

The Board has provided extensive opportunity for public input and involvement in compliance with Administrative Procedure Act requirements, including publishing a proposed rule in the **Federal Register**, participation in multiple Regional Council meetings, additional public review and comment on all proposals for regulatory change, and opportunity for additional public comment during the Board meeting prior to deliberation. Additionally, an administrative mechanism exists (and has been used by the public) to request reconsideration of the Board's decision on any particular proposal for regulatory change (36 CFR 242.20 and 50 CFR 100.20). Therefore, the Board believes that sufficient public notice and opportunity for involvement have been given to affected persons regarding Board decisions.

In the more than 20 years the Program has been operating, no benefit to the public has been demonstrated by delaying the effective date of the subsistence regulations. A lapse in regulatory control could affect the continued viability of fish or wildlife populations and future subsistence opportunities for rural Alaskans, and would generally fail to serve the overall public interest. Therefore, the Board finds good cause pursuant to 5 U.S.C. 553(d)(3) to make this rule effective upon the date set forth in **DATES** to ensure continued operation of the subsistence program.

National Environmental Policy Act Compliance

A Draft Environmental Impact Statement (DEIS) for developing a Federal Subsistence Management Program was distributed for public comment on October 7, 1991. That document described the major issues associated with Federal subsistence management as identified through public meetings, written comments, and staff analyses and examined the environmental consequences of four alternatives. Proposed regulations (subparts A, B, and C) that would implement the preferred alternative were included in the DEIS as an appendix. The DEIS and the proposed administrative regulations presented a framework for a regulatory cycle regarding subsistence hunting and fishing regulations (subpart D). The Final Environmental Impact Statement (FEIS) was published on February 28, 1992.

Based on the public comments received, the analysis contained in the FEIS, and the recommendations of the Federal Subsistence Board and the Department of the Interior's Subsistence Policy Group, the Secretary of the Interior, with the concurrence of the Secretary of Agriculture, through the U.S. Department of Agriculture—Forest Service, implemented Alternative IV as identified in the DEIS and FEIS (Record of Decision on Subsistence Management for Federal Public Lands in Alaska (ROD), signed April 6, 1992). The DEIS and the selected alternative in the FEIS defined the administrative framework of a regulatory cycle for subsistence hunting and fishing regulations. The final rule for subsistence management regulations for public lands in Alaska, subparts A, B, and C, implemented the Federal Subsistence Management Program and included a framework for a regulatory cycle for the subsistence taking of wildlife and fish. The following **Federal Register** documents pertain to this rulemaking:

SUBSISTENCE MANAGEMENT REGULATIONS FOR PUBLIC LANDS IN ALASKA, SUBPARTS A, B, AND C: FEDERAL REGISTER DOCUMENTS PERTAINING TO THE FINAL RULE

Federal Register citation	Date of publication	Category	Details
57 FR 22940	May 29, 1992	Final Rule	"Subsistence Management Regulations for Public Lands in Alaska; Final Rule" was published in the **Federal Register**.
64 FR 1276	January 8, 1999	Final Rule	Amended the regulations to include subsistence activities occurring on inland navigable waters in which the United States has a reserved water right and to identify specific Federal land units where reserved water rights exist. Extended the Federal Subsistence Board's management to all Federal lands selected under the Alaska Native Claims Settlement Act and the Alaska Statehood Act and situated within the boundaries of a Conservation System Unit, National Recreation Area, National Conservation Area, or any new national forest or forest addition, until conveyed to the State of Alaska or to an Alaska Native Corporation. Specified and clarified the Secretaries' authority to determine when hunting, fishing, or trapping activities taking place in Alaska off the public lands interfere with the subsistence priority.
66 FR 31533	June 12, 2001	Interim Rule	Expanded the authority that the Board may delegate to agency field officials and clarified the procedures for enacting emergency or temporary restrictions, closures, or openings.
67 FR 30559	May 7, 2002	Final Rule	Amended the operating regulations in response to comments on the June 12, 2001, interim rule. Also corrected some inadvertent errors and oversights of previous rules.
68 FR 7703	February 18, 2003	Direct Final Rule	Clarified how old a person must be to receive certain subsistence use permits and removed the requirement that Regional Councils must have an odd number of members.
68 FR 23035	April 30, 2003	Affirmation of Direct Final Rule.	Because no adverse comments were received on the direct final rule (67 FR 30559), the direct final rule was adopted.

SUBSISTENCE MANAGEMENT REGULATIONS FOR PUBLIC LANDS IN ALASKA, SUBPARTS A, B, AND C:—Continued
FEDERAL REGISTER DOCUMENTS PERTAINING TO THE FINAL RULE

Federal Register citation	Date of publication	Category	Details
69 FR 60957	October 14, 2004	Final Rule	Clarified the membership qualifications for Regional Advisory Council membership and relocated the definition of "regulatory year" from subpart A to subpart D of the regulations.
70 FR 76400	December 27, 2005	Final Rule	Revised jurisdiction in marine waters and clarified jurisdiction relative to military lands.
71 FR 49997	August 24, 2006	Final Rule	Revised the jurisdiction of the subsistence program by adding submerged lands and waters in the area of Makhnati Island, near Sitka, AK. This allowed subsistence users to harvest marine resources in this area under seasons, harvest limits, and methods specified in the regulations.
72 FR 25688	May 7, 2007	Final Rule	Revised nonrural determinations.
75 FR 63088	October 14, 2010	Final Rule	Amended the regulations for accepting and addressing special action requests and the role of the Regional Advisory Councils in the process.

An environmental assessment was prepared in 1997 on the expansion of Federal jurisdiction over fisheries and is available from the office listed under **FOR FURTHER INFORMATION CONTACT**. The Secretary of the Interior with the concurrence of the Secretary of Agriculture determined that the expansion of Federal jurisdiction did not constitute a major Federal action significantly affecting the human environment and, therefore, signed a Finding of No Significant Impact.

Section 810 of ANILCA

An ANILCA § 810 analysis was completed as part of the FEIS process on the Federal Subsistence Management Program. The intent of all Federal subsistence regulations is to accord subsistence uses of fish and wildlife on public lands a priority over the taking of fish and wildlife on such lands for other purposes, unless restriction is necessary to conserve healthy fish and wildlife populations. The final § 810 analysis determination appeared in the April 6, 1992, ROD and concluded that the Program, under Alternative IV with an annual process for setting subsistence regulations, may have some local impacts on subsistence uses, but will not likely restrict subsistence uses significantly.

During the subsequent environmental assessment process for extending fisheries jurisdiction, an evaluation of the effects of this rule was conducted in accordance with § 810. That evaluation also supported the Secretaries' determination that the rule will not reach the "may significantly restrict" threshold that would require notice and hearings under ANILCA § 810(a).

Paperwork Reduction Act

An agency may not conduct or sponsor and you are not required to respond to a collection of information unless it displays a currently valid Office of Management and Budget (OMB) control number. This rule does not contain any new collections of information that require OMB approval. OMB has reviewed and approved the following collections of information associated with the subsistence regulations at 36 CFR part 242 and 50 CFR part 100: Subsistence hunting and fishing applications, permits, and reports, Federal Subsistence Regional Advisory Council Membership Application/Nomination and Interview Forms (OMB Control No. 1018–0075 expires January 31, 2013).

Regulatory Planning and Review (Executive Order 12866)

The Office of Management and Budget (OMB) has determined that this rule is not significant and has not reviewed this rule under Executive Order 12866. OMB bases its determination upon the following four criteria:

(a) Whether the rule will have an annual effect of $100 million or more on the economy or adversely affect an economic sector, productivity, jobs, the environment, or other units of the government.

(b) Whether the rule will create inconsistencies with other agencies' actions.

(c) Whether the rule will materially affect entitlements, grants, user fees, loan programs, or the rights and obligations of their recipients.

(d) Whether the rule raises novel legal or policy issues.

Regulatory Flexibility Act

The Regulatory Flexibility Act of 1980 (5 U.S.C. 601 *et seq.*) requires preparation of flexibility analyses for rules that will have a significant effect on a substantial number of small entities, which include small businesses, organizations, or governmental jurisdictions. In general, the resources to be harvested under this rule are already being harvested and consumed by the local harvester and do not result in an additional dollar benefit to the economy. However, we estimate that two million pounds of meat are harvested by subsistence users annually and, if given an estimated dollar value of $3.00 per pound, this amount would equate to about $6 million in food value statewide. Based upon the amounts and values cited above, the Departments certify that this rulemaking will not have a significant economic effect on a substantial number of small entities within the meaning of the Regulatory Flexibility Act.

Small Business Regulatory Enforcement Fairness Act

Under the Small Business Regulatory Enforcement Fairness Act (5 U.S.C. 801 *et seq.),* this rule is not a major rule. It does not have an effect on the economy of $100 million or more, will not cause a major increase in costs or prices for consumers, and does not have significant adverse effects on competition, employment, investment, productivity, innovation, or the ability of U.S.-based enterprises to compete with foreign-based enterprises.

Executive Order 12630

Title VIII of ANILCA requires the Secretaries to administer a subsistence priority on public lands. The scope of this Program is limited by definition to certain public lands. Likewise, these regulations have no potential takings of private property implications as defined by Executive Order 12630.

Unfunded Mandates Reform Act

The Secretaries have determined and certify pursuant to the Unfunded Mandates Reform Act, 2 U.S.C. 1502 *et seq.,* that this rulemaking will not

impose a cost of $100 million or more in any given year on local or State governments or private entities. The implementation of this rule is by Federal agencies and there is no cost imposed on any State or local entities or Tribal governments.

Executive Order 12988

The Secretaries have determined that these regulations meet the applicable standards provided in §§ 3(a) and 3(b)(2) of Executive Order 12988, regarding civil justice reform.

Executive Order 13132

In accordance with Executive Order 13132, the rule does not have sufficient Federalism implications to warrant the preparation of a Federalism Assessment. Title VIII of ANILCA precludes the State from exercising subsistence management authority over fish and wildlife resources on Federal lands unless it meets certain requirements.

Executive Order 13175

The Alaska National Interest Lands Conservation Act does not provide rights to Tribes for the subsistence taking of wildlife, fish, and shellfish. However, the Board provided Federally recognized Tribes and Alaska Native Corporations an opportunity to consult on this rule. Consultation with Alaska Native Corporations is based on Public Law 108–199, div. H, Sec. 161, Jan. 23, 2004, 118 Stat. 452, as amended by Public Law 108–447, div. H, title V, Sec. 518, Dec. 8, 2004, 118 Stat. 3267, which provides that: "The Director of the Office of Management and Budget and all Federal agencies shall hereafter consult with Alaska Native Corporations on the same basis as Indian Tribes under Executive Order No. 13175."

The Secretaries, through the Board, provided a variety of opportunities for Tribal consultation: Submitting proposals to change the existing rule, commenting on proposed changes to the existing rule; engaging in dialogue at the Regional Council meetings; engaging in dialogue at the Board's meetings; and providing input in person, by mail, e-mail, or phone at any time during this rulemaking process.

On January 18, 2011, the Board provided Federally recognized Tribes and Alaska Native Corporations a specific opportunity to consult on this rule prior to the start of its public regulatory meeting. Federally recognized Tribes and Alaska Native Corporations were notified by mail and telephone and were given the opportunity to attend in person or via teleconference.

Executive Order 13211

This Executive Order requires agencies to prepare Statements of Energy Effects when undertaking certain actions. However, this rule is not a significant regulatory action under E.O. 13211, affecting energy supply, distribution, or use, and no Statement of Energy Effects is required.

Drafting Information

Theo Matuskowitz drafted these regulations under the guidance of Peter J. Probasco of the Office of Subsistence Management, Alaska Regional Office, U.S. Fish and Wildlife Service, Anchorage, Alaska. Additional assistance was provided by

- Daniel Sharp, Alaska State Office, Bureau of Land Management;
- Sandy Rabinowitch and Nancy Swanton, Alaska Regional Office, National Park Service;
- Dr. Glenn Chen, Alaska Regional Office, Bureau of Indian Affairs;
- Jerry Berg, Alaska Regional Office, U.S. Fish and Wildlife Service; and
- Steve Kessler, Alaska Regional Office, U.S. Forest Service.

List of Subjects

36 CFR Part 242

Administrative practice and procedure, Alaska, Fish, National forests, Public lands, Reporting and recordkeeping requirements, Wildlife.

50 CFR Part 100

Administrative practice and procedure, Alaska, Fish, National forests, Public lands, Reporting and recordkeeping requirements, Wildlife.

Regulation Promulgation

For the reasons set out in the preamble, the Federal Subsistence Board amends title 36, part 242, and title 50, part 100, of the Code of Federal Regulations, as set forth below.

PART ____—SUBSISTENCE MANAGEMENT REGULATIONS FOR PUBLIC LANDS IN ALASKA

■ 1. The authority citation for both 36 CFR part 242 and 50 CFR part 100 continues to read as follows:

Authority: 16 U.S.C. 3, 472, 551, 668dd, 3101–3126; 18 U.S.C. 3551–3586; 43 U.S.C. 1733.

Subpart C—Board Determinations

■ 2. In subpart C of 36 CFR part 242 and 50 CFR part 100, § ____.22(b) is revised to read as follows:

§ ____.22 Subsistence resource regions.

* * * * *

(b) You may obtain maps delineating the boundaries of subsistence resource regions from the U.S. Fish and Wildlife Service, 1011 East Tudor Road, MS 121, Anchorage, Alaska 99503.

■ 3. In subpart C of 36 CFR part 242 and 50 CFR part 100, § ____.24(a)(2) is revised to read as follows:

§ ____.24 Customary and traditional use determinations.

(a) * * *

(2) *Fish determinations.* The following communities and areas have been found to have a positive customary and traditional use determination in the listed area for the indicated species:

Area	Species	Determination
KOTZEBUE AREA	All fish	Residents of the Kotzebue Area.
NORTON SOUND—PORT CLARENCE AREA:		
Norton Sound—Port Clarence Area, waters draining into Norton Sound between Point Romanof and Canal Point.	All fish	Residents of Kotlik, St. Michael and Stebbins.
Norton Sound—Port Clarence Area, remainder	All fish	Residents of the Norton Sound—Port Clarence Area.
YUKON-NORTHERN AREA:		
Yukon River drainage	Salmon, other than fall chum salmon.	Residents of the Yukon River drainage and the community of Stebbins.
Yukon River drainage	Fall chum salmon	Residents of the Yukon River drainage and the communities of Chevak, Hooper Bay, Scammon Bay, and Stebbins.
Yukon River drainage	Freshwater fish (other than salmon).	Residents of the Yukon-Northern Area.

Area	Species	Determination
Remainder of the Yukon-Northern Area	All fish	Residents of the Yukon-Northern Area, excluding the residents of the Yukon River drainage and excluding those domiciled in Unit 26B.
Tanana River drainage contained within the Tetlin NWR and the Wrangell-St. Elias NPP.	Freshwater fish (other than salmon).	Residents of the Yukon-Northern Area and residents of Chistochina, Mentasta Lake, Slana, and all residents living between Mentasta Lake and Chistochina.
KUSKOKWIM AREA:		
	Salmon	Residents of the Kuskokwim Area, except those persons residing on the United States military installations located on Cape Newenham, Sparrevohn USAFB, and Tatalina USAFB.
	Rainbow trout	Residents of the communities of Akiachak, Akiak, Aniak, Atmautluak, Bethel, Chuathbaluk, Crooked Creek, Eek, Goodnews Bay, Kasigluk, Kwethluk, Lower Kalskag, Napakiak, Napaskiak, Nunapitchuk, Oscarville, Platinum, Quinhagak, Tuluksak, Tuntutuliak, and Upper Kalskag.
	Pacific cod	Residents of the communities of Chefornak, Chevak, Eek, Kipnuk, Kongiganak, Kwigillingok, Mekoryuk, Newtok, Nightmute, Tununak, Toksook Bay, and Tuntutuliak.
	All other fish other than herring.	Residents of the Kuskokwim Area, except those persons residing on the United States military installation located on Cape Newenham, Sparrevohn USAFB, and Tatalina USAFB.
Waters around Nunivak Island	Herring and herring roe	Residents within 20 miles of the coast between the westernmost tip of the Naskonat Peninsula and the terminus of the Ishowik River and on Nunivak Island.
BRISTOL BAY AREA:		
Nushagak District, including drainages flowing into the district.	Salmon and freshwater fish	Residents of the Nushagak District and freshwater drainages flowing into the district.
Naknek-Kvichak District—Naknek River drainage	Salmon and freshwater fish	Residents of the Naknek and Kvichak River drainages.
Naknek-Kvichak District—Kvichak/Iliamna—Lake Clark drainage.	Salmon and freshwater fish	Residents of the Kvichak/Iliamna-Lake Clark drainage.
Togiak District, including drainages flowing into the district.	Salmon and freshwater fish	Residents of the Togiak District, freshwater drainages flowing into the district, and the community of Manokotak.
Egegik District, including drainages flowing into the district.	Salmon and freshwater fish	Residents of South Naknek, the Egegik District and freshwater drainages flowing into the district.
Ugashik District, including drainages flowing into the district.	Salmon and freshwater fish	Residents of the Ugashik District and freshwater drainages flowing into the district.
Togiak District	Herring spawn on kelp	Residents of the Togiak District and freshwater drainages flowing into the district.
Remainder of the Bristol Bay Area	All fish	Residents of the Bristol Bay Area.
ALEUTIAN ISLANDS AREA	All fish	Residents of the Aleutian Islands Area and the Pribilof Islands.
ALASKA PENINSULA AREA	All fish	Residents of the Alaska Peninsula Area.
CHIGNIK AREA	Salmon and fish other than rainbow/steelhead trout.	Residents of the Chignik Area.
KODIAK AREA:		
Except the Mainland District, all waters along the south side of the Alaska Peninsula bounded by the latitude of Cape Douglas (58°51.10′ North latitude) mid-stream Shelikof Strait, north and east of the longitude of the southern entrance of Imuya Bay near Kilokak Rocks (57°10.34′ North latitude, 156°20.22′ West longitude).	Salmon	Residents of the Kodiak Island Borough, except those residing on the Kodiak Coast Guard Base.
Kodiak Area	Fish other than rainbow/steelhead trout and salmon.	Residents of the Kodiak Area.
COOK INLET AREA:		
Kenai Peninsula District—Waters north of and including the Kenai River drainage within the Kenai National Wildlife Refuge and the Chugach National Forest.	All fish	Residents of the communities of Cooper Landing, Hope and Ninilchik.
Waters within the Kasilof River drainage within the Kenai NWR.	All fish	Residents of the community of Ninilchik.
Waters within Lake Clark National Park draining into and including that portion of Tuxedni Bay within the park.	Salmon	Residents of the Tuxedni Bay Area.
Cook Inlet Area	Fish other than salmon, Dolly Varden, trout, char, grayling, and burbot.	Residents of the Cook Inlet Area.

Area	Species	Determination
Remainder of the Cook Inlet Area	Salmon, Dolly Varden, trout, char, grayling, and burbot.	All rural residents.
PRINCE WILLIAM SOUND AREA:		
Southwestern District and Green Island	Salmon	Residents of the Southwestern District, which is mainland waters from the outer point on the north shore of Granite Bay to Cape Fairfield, and Knight Island, Chenega Island, Bainbridge Island, Evans Island, Elrington Island, Latouche Island and adjacent islands.
North of a line from Porcupine Point to Granite Point, and south of a line from Point Lowe to Tongue Point.	Salmon	Residents of the villages of Tatitlek and Ellamar.
Copper River drainage upstream from Haley Creek	Freshwater fish	Residents of Cantwell, Chisana, Chistochina, Chitina, Copper Center, Dot Lake, Gakona, Gakona Junction, Glennallen, Gulkana, Healy Lake, Kenny Lake, Lower Tonsina, McCarthy, Mentasta Lake, Nabesna, Northway, Slana, Tanacross, Tazlina, Tetlin, Tok, Tonsina, and those individuals that live along the Tok Cutoff from Tok to Mentasta Pass, and along the Nabesna Road.
Gulkana National Wild and Scenic River	Freshwater fish	Residents of Cantwell, Chisana, Chistochina, Chitina, Copper Center, Dot Lake, Gakona, Gakona Junction, Glennallen, Gulkana, Healy Lake, Kenny Lake, Lower Tonsina, McCarthy, Mentasta Lake, Nabesna, Northway, Paxson-Sourdough, Slana, Tanacross, Tazlina, Tetlin, Tok, Tonsina, and those individuals that live along the Tok Cutoff from Tok to Mentasta Pass, and along the Nabesna Road.
Waters of the Prince William Sound Area, except for the Copper River drainage upstream of Haley Creek.	Freshwater fish (trout, char, whitefish, suckers, grayling, and burbot).	Residents of the Prince William Sound Area, except those living in the Copper River drainage upstream of Haley Creek.
Chitina Subdistrict of the Upper Copper River District.	Salmon	Residents of Cantwell, Chickaloon, Chisana, Chistochina, Chitina, Copper Center, Dot Lake, Gakona, Gakona Junction, Glennallen, Gulkana, Healy Lake, Kenny Lake, Lower Tonsina, McCarthy, Mentasta Lake, Nabesna, Northway, Paxson-Sourdough, Slana, Tanacross, Tazlina, Tetlin, Tok, Tonsina, and those individuals that live along the Tok Cutoff from Tok to Mentasta Pass, and along the Nabesna Road.
Glennallen Subdistrict of the Upper Copper River District.	Salmon	Residents of the Prince William Sound Area and residents of Cantwell, Chickaloon, Chisana, Dot Lake, Healy Lake, Northway, Tanacross, Tetlin, Tok, and those individuals living along the Alaska Highway from the Alaskan/Canadian border to Dot Lake, along the Tok Cutoff from Tok to Mentasta Pass, and along the Nabesna Road.
Waters of the Copper River between National Park Service regulatory markers located near the mouth of Tanada Creek, and in Tanada Creek between National Park Service regulatory markers identifying the open waters of the creek.	Salmon	Residents of Mentasta Lake and Dot Lake.
Remainder of the Prince William Sound Area	Salmon	Residents of the Prince William Sound Area.
Waters of the Bering River area from Point Martin to Cape Suckling.	Eulachon	Residents of Cordova.
Waters of the Copper River Delta from the Eyak River to Point Martin.	Eulachon	Residents of Cordova, Chenega Bay, and Tatitlek.
YAKUTAT AREA:		
Fresh water upstream from the terminus of streams and rivers of the Yakutat Area from the Doame River to the Tsiu River.	Salmon	Residents of the area east of Yakutat Bay, including the islands within Yakutat Bay, west of the Situk River drainage, and south of and including Knight Island.
Fresh water upstream from the terminus of streams and rivers of the Yakutat Area from the Doame River to Point Manby.	Dolly Varden, steelhead trout, and smelt.	Residents of the area east of Yakutat Bay, including the islands within Yakutat Bay, west of the Situk River drainage, and south of and including Knight Island.
Remainder of the Yakutat Area	Dolly Varden, trout, smelt, and eulachon.	Residents of Southeastern Alaska and Yakutat Areas.
	Salmon	All rural residents.
SOUTHEASTERN ALASKA AREA:		

Area	Species	Determination
District 1—Section 1E in waters of the Naha River and Roosevelt Lagoon.	Salmon, Dolly Varden, trout, smelt, and eulachon.	Residents of the City of Saxman.
District 1—Section 1F in Boca de Quadra in waters of Sockeye Creek and Hugh Smith Lake within 500 yards of the terminus of Sockeye Creek.	Salmon, Dolly Varden, trout, smelt, and eulachon.	Residents of the City of Saxman.
Districts 2, 3, and 5 and waters draining into those Districts.	Salmon, Dolly Varden, trout, smelt, and eulachon.	Residents living south of Sumner Strait and west of Clarence Strait and Kashevaroff Passage.
District 5—North of a line from Point Barrie to Boulder Point.	Salmon, Dolly Varden, trout, smelt, and eulachon.	Residents of the City of Kake and in Kupreanof Island drainages emptying into Keku Strait south of Point White and north of the Portage Bay boat harbor.
District 6 and waters draining into that District	Salmon, Dolly Varden, trout, smelt, and eulachon.	Residents living south of Sumner Strait and west of Clarence Strait and Kashevaroff Passage; residents of drainages flowing into District 6 north of the latitude of Point Alexander (Mitkof Island); residents of drainages flowing into Districts 7 & 8, including the communities of Petersburg & Wrangell; and residents of the communities of Meyers Chuck and Kake.
District 7 and waters draining into that District	Salmon, Dolly Varden, trout, smelt, and eulachon.	Residents of drainages flowing into District 6 north of the latitude of Point Alexander (Mitkof Island); residents of drainages flowing into Districts 7 & 8, including the communities of Petersburg & Wrangell; and residents of the communities of Meyers Chuck and Kake.
District 8 and waters draining into that District	Salmon, Dolly Varden, trout, smelt, and eulachon.	Residents of drainages flowing into Districts 7 & 8, residents of drainages flowing into District 6 north of the latitude of Point Alexander (Mitkof Island), and residents of Meyers Chuck.
District 9—Section 9A	Salmon, Dolly Varden, trout, smelt, and eulachon.	Residents of the City of Kake and in Kupreanof Island drainages emptying into Keku Strait south of Point White and north of the Portage Bay boat harbor.
District 9—Section 9B north of the latitude of Swain Point.	Salmon, Dolly Varden, trout, smelt, and eulachon.	Residents of the City of Kake and in Kupreanof Island drainages emptying into Keku Strait south of Point White and north of the Portage Bay boat harbor.
District 10—West of a line from Pinta Point to False Point Pybus.	Salmon, Dolly Varden, trout, smelt, and eulachon.	Residents of the City of Kake and in Kupreanof Island drainages emptying into Keku Strait south of Point White and north of the Portage Bay boat harbor.
District 12—Section 12A, excluding the area south of a line from Fishery Point to South Passage point.	All fish	Residents of drainages flowing into Districts 12 and 14.
District 12—Section 12B	All fish	Residents of drainages flowing into Districts 12 and 14.
District 12—Section 12A, the area south of a line from Fishery Point to South Passage Point.	Salmon, Dolly Varden, trout, smelt, and eulachon.	Residents of the City of Angoon and along the western shore of Admiralty Island north of the latitude of Sand Island, south of the latitude of Thayer Creek, and west of 134°30′ West longitude, including Killisnoo Island.
District 13—Section 13A, excluding the area south of the latitude of Cape Edward.	All fish	Residents of drainages flowing into Sections 13A, 13B, and District 14.
District 13—Section 13A, south of the latitude of Cape Edward.	Salmon, Dolly Varden, trout, smelt, and eulachon.	Residents of the City and Borough of Sitka in drainages that empty into Section 13B, north of the latitude of Dorothy Narrows.
District 13—Section 13B north of the latitude of Redfish Cape.	Salmon, Dolly Varden, trout, smelt, and eulachon.	Residents of the City and Borough of Sitka in drainages that empty into Section 13B north of the latitude of Dorothy Narrows.
District 13—Section 13C	Salmon, Dolly Varden, trout, smelt, and eulachon.	Residents of the City and Borough of Sitka in drainages that empty into Section 13B north of the latitude of Dorothy Narrows.
District 13—Section 13C east of the longitude of Point Elizabeth.	Salmon, Dolly Varden, trout, smelt, and eulachon.	Residents of the City of Angoon and along the western shore of Admiralty Island north of the latitude of Sand Island, south of the latitude of Thayer Creek, and west of 134°30′ West longitude, including Killisnoo Island.
District 13—Section 13C	Salmon, Dolly Varden, trout, smelt, and eulachon.	Residents of the City and Borough of Sitka in drainages that empty into Section 13B north of the latitude of Dorothy Narrows.
District 14	All fish	Residents of drainages flowing into Sections 12A, 13A, and District 14.
Remainder of the Southeastern Alaska Area	Dolly Varden, trout, smelt, and eulachon.	Residents of Southeastern Alaska and Yakutat Areas.
	Salmon	All rural residents.

* * * * *

Subpart D—Subsistence Taking of Fish and Wildlife

■ 4. In subpart D of 36 CFR part 242 and 50 CFR part 100, § ___.27 is added to read as follows:

§____.27 Subsistence taking of fish.

(a) *Applicability.*

(1) Regulations in this section apply to the taking of fish or their parts for subsistence uses.

(2) You may take fish for subsistence uses at any time by any method unless you are restricted by the subsistence fishing regulations found in this section. The harvest limit specified in this section for a subsistence season for a species and the State harvest limit set for a State season for the same species are not cumulative, except as modified by regulations in paragraph (e) of this section. This means that if you have taken the harvest limit for a particular species under a subsistence season specified in this section, you may not, after that, take any additional fish of that species under any other harvest limit specified for a State season.

(3) You may not possess, transport, give, receive, or barter subsistence-taken fish or their parts that have been taken contrary to Federal law or regulation or State law or regulation (unless superseded by regulations in this part).

(b) *Methods, means, and general restrictions.*

(1) Unless otherwise specified in this section or under terms of a required subsistence fishing permit (as may be modified by regulations in this section), you may use the following legal types of gear for subsistence fishing:

(i) A set gillnet;
(ii) A drift gillnet;
(iii) A purse seine;
(iv) A hand purse seine;
(v) A beach seine;
(vi) Troll gear;
(vii) A fish wheel;
(viii) A trawl;
(ix) A pot;
(x) A longline;
(xi) A fyke net;
(xii) A lead;
(xiii) A herring pound;
(xiv) A dip net;
(xv) Jigging gear;
(xvi) A mechanical jigging machine;
(xvii) A handline;
(xviii) A cast net;
(xix) A rod and reel; and
(xx) A spear.

(2) You must include an escape mechanism on all pots used to take fish or shellfish. The escape mechanisms are as follows:

(i) A sidewall, which may include the tunnel, of all shellfish and bottomfish pots must contain an opening equal to or exceeding 18 inches in length, except that in shrimp pots the opening must be a minimum of 6 inches in length. The opening must be laced, sewn, or secured together by a single length of untreated, 100 percent cotton twine, no larger than 30 thread. The cotton twine may be knotted at each end only. The opening must be within 6 inches of the bottom of the pot and must be parallel with it. The cotton twine may not be tied or looped around the web bars. Dungeness crab pots may have the pot lid tie-down straps secured to the pot at one end by a single loop of untreated, 100 percent cotton twine no larger than 60 thread, or the pot lid must be secured so that, when the twine degrades, the lid will no longer be securely closed.

(ii) All king crab, Tanner crab, shrimp, miscellaneous shellfish and bottomfish pots may, instead of complying with paragraph (b)(2)(i) of this section, satisfy the following: a sidewall, which may include the tunnel, must contain an opening at least 18 inches in length, except that shrimp pots must contain an opening at least 6 inches in length. The opening must be laced, sewn, or secured together by a single length of treated or untreated twine, no larger than 36 thread. A galvanic timed-release device, designed to release in no more than 30 days in saltwater, must be integral to the length of twine so that, when the device releases, the twine will no longer secure or obstruct the opening of the pot. The twine may be knotted only at each end and at the attachment points on the galvanic timed-release device. The opening must be within 6 inches of the bottom of the pot and must be parallel with it. The twine may not be tied or looped around the web bars.

(3) For subsistence fishing for salmon, you may not use a gillnet exceeding 50 fathoms in length, unless otherwise specified in this section. The gillnet web must contain at least 30 filaments of equal diameter or at least 6 filaments, each of which must be at least 0.20 millimeter in diameter.

(4) Except as otherwise provided for in this section, you may not obstruct more than one-half the width of any stream with any gear used to take fish for subsistence uses.

(5) You may not use live nonindigenous fish as bait.

(6) You must have your first initial, last name, and address plainly and legibly inscribed on the side of your fish wheel facing midstream of the river.

(7) You may use kegs or buoys of any color but red on any permitted gear, except in the following areas where kegs or buoys of any color, including red, may be used:

(i) Yukon–Northern Area; and
(ii) Kuskokwim Area.

(8) You must have your first initial, last name, and address plainly and legibly inscribed on each keg, buoy, stakes attached to gillnets, stakes identifying gear fished under the ice, and any other unattended fishing gear which you use to take fish for subsistence uses.

(9) You may not use explosives or chemicals to take fish for subsistence uses.

(10) You may not take fish for subsistence uses within 300 feet of any dam, fish ladder, weir, culvert or other artificial obstruction, unless otherwise indicated.

(11) *Transactions between rural residents.* Rural residents may exchange in customary trade subsistence-harvested fish, their parts, or their eggs, legally taken under the regulations in this part, for cash from other rural residents. The Board may recognize regional differences and regulates customary trade differently for separate regions of the State.

(i) Bristol Bay Fishery Management Area—The total cash value per household of salmon taken within Federal jurisdiction in the Bristol Bay Fishery Management Area and exchanged in customary trade to rural residents may not exceed $500.00 annually.

(ii) Upper Copper River District—The total number of salmon per household taken within the Upper Copper River District and exchanged in customary trade to rural residents may not exceed 50 percent of the annual harvest of salmon by the household. No more than 50 percent of the annual household limit may be sold under paragraphs (b)(11) and (12) of this section when taken together. These customary trade sales must be immediately recorded on a customary trade recordkeeping form. The recording requirement and the responsibility to ensure the household limit is not exceeded rests with the seller.

(12) *Transactions between a rural resident and others.* In customary trade, a rural resident may trade fish, their parts, or their eggs, legally taken under the regulations in this part, for cash from individuals other than rural residents if the individual who purchases the fish, their parts, or their eggs uses them for personal or family consumption. If you are not a rural resident, you may not sell fish, their parts, or their eggs taken under the regulations in this part. The Board may

recognize regional differences and regulates customary trade differently for separate regions of the State.

(i) Bristol Bay Fishery Management Area—The total cash value per household of salmon taken within Federal jurisdiction in the Bristol Bay Fishery Management Area and exchanged in customary trade between rural residents and individuals other than rural residents may not exceed $400.00 annually. These customary trade sales must be immediately recorded on a customary trade recordkeeping form. The recording requirement and the responsibility to ensure the household limit is not exceeded rest with the seller.

(ii) Upper Copper River District—The total cash value of salmon per household taken within the Upper Copper River District and exchanged in customary trade between rural residents and individuals other than rural residents may not exceed $500.00 annually. No more than 50 percent of the annual household limit may be sold under paragraphs (b)(11) and (12) of this section when taken together. These customary trade sales must be immediately recorded on a customary trade recordkeeping form. The recording requirement and the responsibility to ensure the household limit is not exceeded rest with the seller.

(13) *No sale to, nor purchase by, fisheries businesses.*

(i) You may not sell fish, their parts, or their eggs taken under the regulations in this part to any individual, business, or organization required to be licensed as a fisheries business under Alaska Statute AS 43.75.011 (commercial limited-entry permit or crew license holders excluded) or to any other business as defined under Alaska Statute 43.70.110(1) as part of its business transactions.

(ii) If you are required to be licensed as a fisheries business under Alaska Statute AS 43.75.011 (commercial limited-entry permit or crew license holders excluded) or are a business as defined under Alaska Statute 43.70.110(1), you may not purchase, receive, or sell fish, their parts, or their eggs taken under the regulations in this part as part of your business transactions.

(14) Except as provided elsewhere in this section, you may not take rainbow/steelhead trout.

(15) You may not use fish taken for subsistence use or under subsistence regulations in this part as bait for commercial or sport fishing purposes.

(16) Unless specified otherwise in this section, you may use a rod and reel to take fish without a subsistence fishing permit. Harvest limits applicable to the use of a rod and reel to take fish for subsistence uses shall be as follows:

(i) If you are required to obtain a subsistence fishing permit for an area, that permit is required to take fish for subsistence uses with rod and reel in that area. The harvest and possession limits for taking fish with a rod and reel in those areas are the same as indicated on the permit issued for subsistence fishing with other gear types.

(ii) Except as otherwise provided for in this section, if you are not required to obtain a subsistence fishing permit for an area, the harvest and possession limits for taking fish for subsistence uses with a rod and reel are the same as for taking fish under State of Alaska subsistence fishing regulations in those same areas. If the State does not have a specific subsistence season and/or harvest limit for that particular species, the limit shall be the same as for taking fish under State of Alaska sport fishing regulations.

(17) Unless restricted in this section, or unless restricted under the terms of a subsistence fishing permit, you may take fish for subsistence uses at any time.

(18) Provisions on ADF&G subsistence fishing permits that are more restrictive or in conflict with the provisions contained in this section do not apply to Federal subsistence users.

(19) You may not intentionally waste or destroy any subsistence-caught fish or shellfish; however, you may use for bait or other purposes, whitefish, herring, and species for which harvest limits, seasons, or other regulatory methods and means are not provided in this section, as well as the head, tail, fins, and viscera of legally taken subsistence fish.

(20) The taking of fish from waters within Federal jurisdiction is authorized outside of published open seasons or harvest limits if the harvested fish will be used for food in traditional or religious ceremonies that are part of funerary or mortuary cycles, including memorial potlatches, provided that:

(i) Prior to attempting to take fish, the person (or designee) or Tribal Government organizing the ceremony contacts the appropriate Federal fisheries manager to provide the nature of the ceremony, the parties and/or clans involved, the species and the number of fish to be taken, and the Federal waters from which the harvest will occur;

(ii) The taking does not violate recognized principles of fisheries conservation, and uses the methods and means allowable for the particular species published in the applicable Federal regulations (the Federal fisheries manager will establish the number, species, or place of taking if necessary for conservation purposes);

(iii) Each person who takes fish under this section must, as soon as practical, and not more than 15 days after the harvest, submit a written report to the appropriate Federal fisheries manager, specifying the harvester's name and address, the number and species of fish taken, and the date and locations of the taking; and

(iv) No permit is required for taking under this section; however, the harvester must be eligible to harvest the resource under Federal regulations.

(c) *Fishing permits and reports.*

(1) You may take salmon only under the authority of a subsistence fishing permit, unless a permit is specifically not required in a particular area by the subsistence regulations in this part, or unless you are retaining salmon from your commercial catch consistent with paragraph (d) of this section.

(2) If a subsistence fishing permit is required by this section, the following permit conditions apply unless otherwise specified in this section:

(i) You may not take more fish for subsistence use than the limits set out in the permit;

(ii) You must obtain the permit prior to fishing;

(iii) You must have the permit in your possession and readily available for inspection while fishing or transporting subsistence-taken fish;

(iv) If specified on the permit, you must record, prior to leaving the fishing site, daily records of the catch, showing the number of fish taken by species, location and date of catch, and other such information as may be required for management or conservation purposes; and

(v) If the return of catch information necessary for management and conservation purposes is required by a fishing permit and you fail to comply with such reporting requirements, you are ineligible to receive a subsistence permit for that activity during the following calendar year, unless you demonstrate that failure to report was due to loss in the mail, accident, sickness, or other unavoidable circumstances. You must also return any tags or transmitters that have been attached to fish for management and conservation purposes.

(d) *Relation to commercial fishing activities.*

(1) If you are a Federally qualified subsistence user who also commercial fishes, you may retain fish for subsistence purposes from your lawfully-taken commercial catch.

(2) When participating in a commercial and subsistence fishery at the same time, you may not use an amount of combined fishing gear in excess of that allowed under the appropriate commercial fishing regulations.

(e) *Fishery management area restrictions.*

(1) *Kotzebue Area.* The Kotzebue Area includes all waters of Alaska between the latitude of the westernmost tip of Point Hope and the latitude of the westernmost tip of Cape Prince of Wales, including those waters draining into the Chukchi Sea.

(i) You may take fish for subsistence purposes without a permit.

(ii) You may take salmon only by gillnets, beach seines, or a rod and reel.

(iii) In the Kotzebue District, you may take sheefish with gillnets that are not more than 50 fathoms in length, nor more than 12 meshes in depth, nor have a stretched-mesh size larger than 7 inches.

(iv) You may not obstruct more than one-half the width of a stream, creek, or slough with any gear used to take fish for subsistence uses, except from May 15 to July 15 and August 15 to October 31 when taking whitefish or pike in streams, creeks, or sloughs within the Kobuk River drainage and from May 15 to October 31 in the Selawik River drainage. Only one gillnet 100 feet or less in length with a stretched-mesh size from 2½ to 4½ inches may be used per site. You must check your net at least once in every 24-hour period.

(2) *Norton Sound–Port Clarence Area.* The Norton Sound–Port Clarence Area includes all waters of Alaska between the latitude of the westernmost tip of Cape Prince of Wales and the latitude of Point Romanof, including those waters of Alaska surrounding St. Lawrence Island and those waters draining into the Bering Sea.

(i) Unless otherwise restricted in this section, you may take fish at any time in the Port Clarence District.

(ii) In the Norton Sound District, you may take fish at any time except as follows:

(A) In Subdistricts 2 through 6, if you are a commercial fishermen, you may not fish for subsistence purposes during the weekly closures of the State commercial salmon fishing season, except that from July 15 through August 1, you may take salmon for subsistence purposes 7 days per week in the Unalakleet and Shaktoolik River drainages with gillnets which have a stretched-mesh size that does not exceed 4½ inches, and with beach seines;

(B) In the Unalakleet River from June 1 through July 15, you may take salmon only from 8 a.m. Monday until 8 p.m. Saturday.

(C) Federal public waters of the Unalakleet River, upstream from the mouth of the Chirosky River, are closed to the taking of Chinook salmon from July 1 to July 31, by all users. The BLM field manager is authorized to open the closed area to Federally qualified subsistence users or to all users when run strength warrants.

(iii) You may take salmon only by gillnets, beach seines, fish wheel, or a rod and reel.

(iv) You may take fish other than salmon by set gillnet, drift gillnet, beach seine, fish wheel, pot, long line, fyke net, jigging gear, spear, lead, or a rod and reel.

(v) In the Unalakleet River from June 1 through July 15, you may not operate more than 25 fathoms of gillnet in the aggregate nor may you operate an unanchored gillnet.

(3) *Yukon–Northern Area.* The Yukon–Northern Area includes all waters of Alaska between the latitude of Point Romanof and the latitude of the westernmost point of the Naskonat Peninsula, including those waters draining into the Bering Sea, and all waters of Alaska north of the latitude of the westernmost tip of Point Hope and west of 141° West longitude, including those waters draining into the Arctic Ocean and the Chukchi Sea.

(i) Unless otherwise restricted in this section, you may take fish in the Yukon–Northern Area at any time. In those locations where subsistence fishing permits are required, only one subsistence fishing permit will be issued to each household per year. You may subsistence fish for salmon with rod and reel in the Yukon River drainage 24 hours per day, 7 days per week, unless rod and reel are specifically otherwise restricted in paragraph (e)(3) of this section.

(ii) For the Yukon River drainage, Federal subsistence fishing schedules, openings, closings, and fishing methods are the same as those issued for the subsistence taking of fish under Alaska Statutes (AS 16.05.060), unless superseded by a Federal Special Action.

(iii) In the following locations, you may take salmon during the open weekly fishing periods of the State commercial salmon fishing season and may not take them for 24 hours before the opening of the State commercial salmon fishing season:

(A) In District 4, excluding the Koyukuk River drainage;

(B) In Subdistricts 4B and 4C from June 15 through September 30, salmon may be taken from 6 p.m. Sunday until 6 p.m. Tuesday and from 6 p.m. Wednesday until 6 p.m. Friday;

(C) In District 6, excluding the Kantishna River drainage, salmon may be taken from 6 p.m. Friday until 6 p.m. Wednesday.

(iv) During any State commercial salmon fishing season closure of greater than 5 days in duration, you may not take salmon during the following periods in the following districts:

(A) In District 4, excluding the Koyukuk River drainage, salmon may not be taken from 6 p.m. Friday until 6 p.m. Sunday;

(B) In District 5, excluding the Tozitna River drainage and Subdistrict 5D, salmon may not be taken from 6 p.m. Sunday until 6 p.m. Tuesday.

(v) Except as provided in this section, and except as may be provided by the terms of a subsistence fishing permit, you may take fish other than salmon at any time.

(vi) In Districts 1, 2, 3, and Subdistrict 4A, excluding the Koyukuk and Innoko River drainages, you may not take salmon for subsistence purposes during the 24 hours immediately before the opening of the State commercial salmon fishing season.

(vii) In Districts 1, 2, and 3:

(A) After the opening of the State commercial salmon fishing season through July 15, you may not take salmon for subsistence for 18 hours immediately before, during, and for 12 hours after each State commercial salmon fishing period;

(B) After July 15, you may not take salmon for subsistence for 12 hours immediately before, during, and for 12 hours after each State commercial salmon fishing period.

(viii) In Subdistrict 4A after the opening of the State commercial salmon fishing season, you may not take salmon for subsistence for 12 hours immediately before, during, and for 12 hours after each State commercial salmon fishing period; however, you may take Chinook salmon during the State commercial fishing season, with drift gillnet gear only, from 6 p.m. Sunday until 6 p.m. Tuesday and from 6 p.m. Wednesday until 6 p.m. Friday.

(ix) You may not subsistence fish in the following drainages located north of the main Yukon River:

(A) Kanuti River upstream from a point 5 miles downstream of the State highway crossing;

(B) Bonanza Creek;

(C) Jim River including Prospect and Douglas Creeks.

(x) You may not subsistence fish in the Delta River.

(xi) In Beaver Creek downstream from the confluence of Moose Creek, a gillnet

with mesh size not to exceed 3-inches stretch-measure may be used from June 15 through September 15. You may subsistence fish for all non-salmon species but may not target salmon during this time period (retention of salmon taken incidentally to non-salmon directed fisheries is allowed). From the mouth of Nome Creek downstream to the confluence of Moose Creek, only rod and reel may be used. From the mouth of Nome Creek downstream to the confluence of O'Brien Creek, the daily harvest and possession limit is 5 grayling; from the mouth of O'Brien Creek downstream to the confluence of Moose Creek, the daily harvest and possession limit is 10 grayling. The Nome Creek drainage of Beaver Creek is closed to subsistence fishing for grayling.

(xii) You may not subsistence fish in the Toklat River drainage from August 15 through May 15.

(xiii) You may take salmon only by gillnet, beach seine, fish wheel, or rod and reel, subject to the restrictions set forth in this section.

(A) In the Yukon River drainage, you may not take salmon for subsistence fishing using gillnets with stretched mesh larger than 7.5 inches.

(B) [*Reserved*].

(xiv) In District 4, if you are a commercial fisherman, you may not take salmon for subsistence purposes during the State commercial salmon fishing season using gillnets with stretched-mesh larger than 6 inches after a date specified by ADF&G emergency order issued between July 10 and July 31.

(xv) In Districts 4, 5, and 6, you may not take salmon for subsistence purposes by drift gillnets, except as follows:

(A) In Subdistrict 4A upstream from the mouth of Stink Creek, you may take Chinook salmon by drift gillnets less than 150 feet in length from June 10 through July 14, and chum salmon by drift gillnets after August 2;

(B) In Subdistrict 4A downstream from the mouth of Stink Creek, you may take Chinook salmon by drift gillnets less than 150 feet in length from June 10 through July 14;

(C) In the Yukon River mainstem, Subdistricts 4B and 4C with a Federal subsistence fishing permit, you may take Chinook salmon during the weekly subsistence fishing opening(s) by drift gillnets no more than 150 feet long and no more than 35 meshes deep, from June 10 through July 14.

(xvi) Unless otherwise specified in this section, you may take fish other than salmon by set gillnet, drift gillnet, beach seine, fish wheel, long line, fyke net, dip net, jigging gear, spear, lead, or rod and reel, subject to the following restrictions, which also apply to subsistence salmon fishing:

(A) During the open weekly fishing periods of the State commercial salmon fishing season, if you are a commercial fisherman, you may not operate more than one type of gear at a time, for commercial, personal use, and subsistence purposes.

(B) You may not use an aggregate length of set gillnet in excess of 150 fathoms and each drift gillnet may not exceed 50 fathoms in length.

(C) In Districts 4, 5, and 6, you may not set subsistence fishing gear within 200 feet of other operating commercial use, personal use, or subsistence fishing gear except that, at the site approximately 1 mile upstream from Ruby on the south bank of the Yukon River between ADF&G regulatory markers containing the area known locally as the "Slide," you may set subsistence fishing gear within 200 feet of other operating commercial or subsistence fishing gear, and in District 4, from Old Paradise Village upstream to a point 4 miles upstream from Anvik, there is no minimum distance requirement between fish wheels.

(D) During the State commercial salmon fishing season, within the Yukon River and the Tanana River below the confluence of the Wood River, you may use drift gillnets and fish wheels only during open subsistence salmon fishing periods.

(E) In Birch Creek, gillnet mesh size may not exceed 3-inches stretch-measure from June 15 through September 15.

(xvii) In District 4, from September 21 through May 15, you may use jigging gear from shore ice.

(xviii) You must possess a subsistence fishing permit for the following locations:

(A) For the Yukon River drainage from the mouth of Hess Creek to the mouth of the Dall River;

(B) For the Yukon River drainage from the upstream mouth of 22 Mile Slough to the U.S.-Canada border;

(C) Only for salmon in the Tanana River drainage above the mouth of the Wood River.

(xix) Only one subsistence fishing permit will be issued to each household per year.

(xx) In Districts 1, 2, and 3, you may not possess Chinook salmon taken for subsistence purposes unless the dorsal fin has been removed immediately after landing.

(xxi) In the Yukon River drainage, Chinook salmon must be used primarily for human consumption and may not be targeted for dog food. Dried Chinook salmon may not be used for dog food anywhere in the Yukon River drainage. Whole fish unfit for human consumption (due to disease, deterioration, deformities), scraps, and small fish (16 inches or less) may be fed to dogs. Also, whole Chinook salmon caught incidentally during a subsistence chum salmon fishery in the following time periods and locations may be fed to dogs:

(A) After July 10 in the Koyukuk River drainage;

(B) After August 10, in Subdistrict 5D, upstream of Circle City.

(4) *Kuskokwim Area.* The Kuskokwim Area consists of all waters of Alaska between the latitude of the westernmost point of Naskonat Peninsula and the latitude of the southernmost tip of Cape Newenham, including the waters of Alaska surrounding Nunivak and St. Matthew Islands and those waters draining into the Bering Sea.

(i) Unless otherwise restricted in this section, you may take fish in the Kuskokwim Area at any time without a subsistence fishing permit.

(ii) For the Kuskokwim area, Federal subsistence fishing schedules, openings, closings, and fishing methods are the same as those issued for the subsistence taking of fish under Alaska Statutes (AS 16.05.060), unless superseded by a Federal Special Action.

(iii) In District 1, Kuskokuak Slough, from June 1 through July 31 only, you may not take salmon for 16 hours before and during each State open commercial salmon fishing period in the district.

(iv) In Districts 4 and 5, from June 1 through September 8, you may not take salmon for 16 hours before or during, and for 6 hours after each State open commercial salmon fishing period in each district.

(v) In District 2, and anywhere in tributaries that flow into the Kuskokwim River within that district, from June 1 through September 8 you may not take salmon by net gear or fish wheel for 16 hours before or during, and for 6 hours after each open commercial salmon fishing period in the district. You may subsistence fish for salmon with rod and reel 24 hours per day, 7 days per week, unless rod and reel are specifically restricted by paragraph (e)(4) of this section.

(vi) You may not take subsistence fish by nets in the Goodnews River east of a line between ADF&G regulatory markers placed near the mouth of the Ufigag River and an ADF&G regulatory marker placed near the mouth of the Tunulik River 16 hours before or during, and for 6 hours after each State open commercial salmon fishing period.

(vii) You may not take subsistence fish by nets in the Kanektok River upstream of ADF&G regulatory markers placed near the mouth 16 hours before or during, and for 6 hours after each State open commercial salmon fishing period.

(viii) You may not take subsistence fish by nets in the Arolik River upstream of ADF&G regulatory markers placed near the mouth 16 hours before or during, and for 6 hours after each State open commercial salmon fishing period.

(ix) You may only take salmon by gillnet, beach seine, fish wheel, or rod and reel subject to the restrictions set out in this section, except that you may also take salmon by spear in the Kanektok, and Arolik River drainages, and in the drainage of Goodnews Bay.

(x) You may not use an aggregate length of set gillnets or drift gillnets in excess of 50 fathoms for taking salmon.

(xi) You may take fish other than salmon by set gillnet, drift gillnet, beach seine, fish wheel, pot, long line, fyke net, dip net, jigging gear, spear, lead, handline, or rod and reel.

(xii) You must attach to the bank each subsistence gillnet operated in tributaries of the Kuskokwim River and fish it substantially perpendicular to the bank and in a substantially straight line.

(xiii) Within a tributary to the Kuskokwim River in that portion of the Kuskokwim River drainage from the north end of Eek Island upstream to the mouth of the Kolmakoff River, you may not set or operate any part of a set gillnet within 150 feet of any part of another set gillnet.

(xiv) The maximum depth of gillnets is as follows:

(A) Gillnets with 6-inch or smaller stretched-mesh may not be more than 45 meshes in depth;

(B) Gillnets with greater than 6-inch stretched-mesh may not be more than 35 meshes in depth.

(xv) You may not use subsistence set and drift gillnets exceeding 15 fathoms in length in Whitefish Lake in the Ophir Creek drainage. You may not operate more than one subsistence set or drift gillnet at a time in Whitefish Lake in the Ophir Creek drainage. You must check the net at least once every 24 hours.

(xvi) You may take rainbow trout only in accordance with the following restrictions:

(A) You may take rainbow trout only by the use of gillnets, dip nets, fyke nets, handline, spear, rod and reel, or jigging through the ice;

(B) You may not use gillnets, dip nets, or fyke nets for targeting rainbow trout from March 15 through June 15;

(C) If you take rainbow trout incidentally in other subsistence net fisheries and through the ice, you may retain them for subsistence purposes;

(D) There are no harvest limits with handline, spear, rod and reel, or jigging.

(5) *Bristol Bay Area.* The Bristol Bay Area includes all waters of Bristol Bay, including drainages enclosed by a line from Cape Newenham to Cape Menshikof.

(i) Unless restricted in this section, or unless under the terms of a subsistence fishing permit, you may take fish at any time in the Bristol Bay area.

(ii) In all State commercial salmon districts, from May 1 through May 31 and October 1 through October 31, you may subsistence fish for salmon only from 9 a.m. Monday until 9 a.m. Friday. From June 1 through September 30, within the waters of a commercial salmon district, you may take salmon only during State open commercial salmon fishing periods.

(iii) In the Egegik River from 9 a.m. June 23 through 9 a.m. July 17, you may take salmon only during the following times: from 9 a.m. Tuesday to 9 a.m. Wednesday and from 9 a.m. Saturday to 9 a.m. Sunday.

(iv) You may not take fish from waters within 300 feet of a stream mouth used by salmon.

(v) You may not subsistence fish with nets in the Tazimina River and within one-fourth mile of the terminus of those waters during the period from September 1 through June 14.

(vi) Within any district, you may take salmon, herring, and capelin by set gillnets only.

(vii) Outside the boundaries of any district, unless otherwise specified, you may take salmon by set gillnet only.

(A)You may also take salmon by spear in the Togiak River, excluding its tributaries.

(B) You may also use drift gillnets not greater than 10 fathoms in length to take salmon in the Togiak River in the first two river miles upstream from the mouth of the Togiak River to the ADF&G regulatory markers.

(C) You may also take salmon without a permit in Lake Clark and its tributaries by snagging (by handline or rod and reel), using a spear, bow and arrow, or capturing by bare hand.

(D) You may also take salmon by beach seines not exceeding 25 fathoms in length in Lake Clark, excluding its tributaries.

(E) You may also take fish (except rainbow trout) with a fyke net and lead in tributaries of Lake Clark and the tributaries of Sixmile Lake within and adjacent to the exterior boundaries of Lake Clark National Park and Preserve unless otherwise prohibited.

(1) You may use a fyke net and lead only with a permit issued by the Federal in-season manager.

(2) All fyke nets and leads must be attended at all times while in use.

(3) All materials used to construct the fyke net and lead must be made of wood and be removed from the water when the fyke net and lead is no longer in use.

(viii) The maximum lengths for set gillnets used to take salmon are as follows:

(A) You may not use set gillnets exceeding 10 fathoms in length in the Egegik River;

(B) In the remaining waters of the area, you may not use set gillnets exceeding 25 fathoms in length.

(ix) You may not operate any part of a set gillnet within 300 feet of any part of another set gillnet.

(x) You must stake and buoy each set gillnet. Instead of having the identifying information on a keg or buoy attached to the gillnet, you may plainly and legibly inscribe your first initial, last name, and subsistence permit number on a sign at or near the set gillnet.

(xi) You may not operate or assist in operating subsistence salmon net gear while simultaneously operating or assisting in operating commercial salmon net gear.

(xii) During State closed commercial herring fishing periods, you may not use gillnets exceeding 25 fathoms in length for the subsistence taking of herring or capelin.

(xiii) You may take fish other than salmon, herring and capelin by gear listed in this part unless restricted under the terms of a subsistence fishing permit.

(xiv) You may take salmon only under authority of a State subsistence salmon permit (permits are issued by ADF&G) except when using a Federal permit for fyke net and lead.

(xv) Only one State subsistence fishing permit for salmon and one Federal permit for use of a fyke net and lead for all fish (except rainbow trout) may be issued to each household per year.

(xvi) In the Togiak River section and the Togiak River drainage:

(A) You may not possess coho salmon taken under the authority of a subsistence fishing permit unless both lobes of the caudal fin (tail) or the dorsal fin have been removed.

(B) You may not possess salmon taken with a drift gillnet under the authority of a subsistence fishing permit unless both lobes of the caudal fin (tail) or the dorsal fin have been removed.

(xvii) You may take rainbow trout only by rod and reel or jigging gear.

Rainbow trout daily harvest and possession limits are two per day/two in possession with no size limit from April 10 through October 31 and five per day/five in possession with no size limit from November 1 through April 9.

(xviii) If you take rainbow trout incidentally in other subsistence net fisheries, or through the ice, you may retain them for subsistence purposes.

(6) *Aleutian Islands Area.* The Aleutian Islands Area includes all waters of Alaska west of the longitude of the tip of Cape Sarichef, east of 172° East longitude, and south of 54°36' North latitude.

(i) You may take fish other than salmon, rainbow/steelhead trout, or char at any time unless restricted under the terms of a subsistence fishing permit. If you take rainbow/steelhead trout incidentally in other subsistence net fisheries, you may retain them for subsistence purposes.

(ii) In the Unalaska District, you may take salmon for subsistence purposes from 6 a.m. until 9 p.m. from January 1 through December 31, except as may be specified on a subsistence fishing permit.

(iii) In the Adak, Akutan, Atka–Amlia, and Umnak Districts, you may take salmon at any time.

(iv) You may not subsistence fish for salmon in the following waters:

(A) The waters of Unalaska Lake, its tributaries and outlet stream;

(B) The waters of Summers and Morris Lakes and their tributaries and outlet streams;

(C) All streams supporting anadromous fish runs that flow into Unalaska Bay south of a line from the northern tip of Cape Cheerful to the northern tip of Kalekta Point;

(D) Waters of McLees Lake and its tributaries and outlet stream;

(E) All fresh water on Adak Island and Kagalaska Island in the Adak District.

(v) You may take salmon by seine and gillnet, or with gear specified on a subsistence fishing permit.

(vi) In the Unalaska District, if you fish with a net, you must be physically present at the net at all times when the net is being used.

(vii) You may take fish other than salmon by gear listed in this part unless restricted under the terms of a subsistence fishing permit.

(viii) You may take salmon, trout, and char only under the terms of a subsistence fishing permit, except that you do not need a permit in the Akutan, Umnak, and Atka–Amlia Islands Districts.

(ix) You may take no more than 250 salmon for subsistence purposes unless otherwise specified on the subsistence fishing permit, except that in the Unalaska and Adak Districts, you may take no more than 25 salmon plus an additional 25 salmon for each member of your household listed on the permit. You may obtain an additional permit.

(x) You must keep a record on the reverse side of the permit of subsistence-caught fish. You must complete the record immediately upon taking subsistence-caught fish and must return it no later than October 31.

(7) *Alaska Peninsula Area.* The Alaska Peninsula Area includes all waters of Alaska on the north side of the Alaska peninsula southwest of a line from Cape Menshikof (57°28.34′ North latitude, 157°55.84′ West longitude) to Cape Newenham (58°39.00′ North latitude, 162° West longitude) and east of the longitude of Cape Sarichef Light (164°55.70′ West longitude) and on the south side of the Alaska Peninsula from a line extending from Scotch Cape through the easternmost tip of Ugamak Island to a line extending 135° southeast from Kupreanof Point (55°33.98′ North latitude, 159°35.88′ West longitude).

(i) You may take fish, other than salmon, rainbow/steelhead trout, or char, at any time unless restricted under the terms of a subsistence fishing permit. If you take rainbow/steelhead trout incidentally in other subsistence net fisheries or through the ice, you may retain them for subsistence purposes.

(ii) You may take salmon, trout, and char only under the authority of a subsistence fishing permit.

(iii) You must keep a record on the reverse side of the permit of subsistence-caught fish. You must complete the record immediately upon taking subsistence-caught fish and must return it no later than October 31.

(iv) You may take salmon at any time, except in those districts and sections open to commercial salmon fishing where salmon may not be taken during the 24 hours before and 12 hours following each State open weekly commercial salmon fishing period, or as may be specified on a subsistence fishing permit.

(v) You may not subsistence fish for salmon in the following waters:

(A) Russell Creek and Nurse Lagoon and within 500 yards outside the mouth of Nurse Lagoon;

(B) Trout Creek and within 500 yards outside its mouth.

(vi) You may take salmon by seine, gillnet, rod and reel, or with gear specified on a subsistence fishing permit. You may also take salmon without a permit by snagging (by handline or rod and reel), using a spear, bow and arrow, or capturing by bare hand.

(vii) You may take fish other than salmon by gear listed in this part unless restricted under the terms of a subsistence fishing permit.

(viii) You may not use a set gillnet exceeding 100 fathoms in length.

(ix) You may take no more than 250 salmon for subsistence purposes unless otherwise specified on your subsistence fishing permit.

(8) *Chignik Area.* The Chignik Area includes all waters of Alaska on the south side of the Alaska Peninsula bounded by a line extending 135° southeast for 3 miles from a point near Kilokak Rocks at 57°10.34′ North latitude, 156°20.22′ West longitude (the longitude of the southern entrance to Imuya Bay) then due south, and a line extending 135° southeast from Kuprean of Point at 55°33.98′ North latitude, 159° 35.88′ West longitude.

(i) You may take fish other than salmon, rainbow/steelhead trout, or char at any time, except as may be specified by a subsistence fishing permit. For salmon, Federal subsistence fishing openings, closings and fishing methods are the same as those issued for the subsistence taking of fish under Alaska Statutes (AS 16.05.060), unless superseded by a Federal Special Action. If you take rainbow/steelhead trout incidentally in other subsistence net fisheries, you may retain them for subsistence purposes.

(ii) You may not take salmon in the Chignik River, from a point 300 feet upstream of the ADF&G weir to Chignik Lake from July 1 through August 31. You may not take salmon by gillnet in Black Lake or any tributary to Black or Chignik Lakes. You may take salmon in the waters of Clark River and Home Creek from their confluence with Chignik Lake upstream 1 mile.

(A) In the open waters of Chignik Lake, Chignik River, Clark River and Home Creek you may take salmon by gillnet under the authority of a subsistence fishing permit.

(B) In the open waters of Clark River and Home Creek you may take salmon by snagging (handline or rod and reel), spear, bow and arrow, or capture by hand without a permit. The daily harvest and possession limits using these methods are five per day and five in possession.

(iii) You may take salmon, trout, and char only under the authority of a subsistence fishing permit unless otherwise indicated in this section or as noted in the permit conditions.

(iv) You must keep a record on your permit of subsistence-caught fish. You must complete the record immediately upon taking subsistence-caught fish and

must return it no later than the due date listed on the permit.

(v) If you hold a commercial fishing license, you may only subsistence fish for salmon as specified on a subsistence fishing permit.

(vi) You may take salmon by seines, gillnets, rod and reel, or with gear specified on a subsistence fishing permit, except that in Chignik Lake, you may not use purse seines. You may also take salmon without a permit by snagging (by handline or rod and reel), using a spear, bow and arrow, or capturing by bare hand.

(vii) You may take fish other than salmon by gear listed in this part unless restricted under the terms of a subsistence fishing permit.

(viii) You may take no more than 250 salmon for subsistence purposes unless otherwise specified on the subsistence fishing permit.

(9) *Kodiak Area.* The Kodiak Area includes all waters of Alaska south of a line extending east from Cape Douglas (58°51.10′ North latitude), west of 150° West longitude, north of 55° 30.00′ North latitude, and north and east of a line extending 135° southeast for three miles from a point near Kilokak Rocks at 57°10.34′ North latitude, 156°20.22′ West longitude (the longitude of the southern entrance of Imuya Bay), then due south.

(i) You may take fish other than salmon, rainbow/steelhead trout, char, bottomfish, or herring at any time unless restricted by the terms of a subsistence fishing permit. If you take rainbow/steelhead trout incidentally in other subsistence net fisheries, you may retain them for subsistence purposes.

(ii) You may take salmon for subsistence purposes 24 hours a day from January 1 through December 31, with the following exceptions:

(A) From June 1 through September 15, you may not use salmon seine vessels to take subsistence salmon for 24 hours before or during, and for 24 hours after any State open commercial salmon fishing period. The use of skiffs from any type of vessel is allowed.

(B) From June 1 through September 15, you may use purse seine vessels to take salmon only with gillnets, and you may have no other type of salmon gear on board the vessel.

(iii) You may not subsistence fish for salmon in the following locations:

(A) Womens Bay closed waters—All waters inside a line from the tip of the Nyman Peninsula (57°43.23′ North latitude, 152°31.51′ West longitude), to the northeastern tip of Mary's Island (57°42.40′ North latitude, 152°32.00′ West longitude), to the southeastern shore of Womens Bay at 57°41.95′ North latitude, 152°31.50′ West longitude.

(B) Buskin River closed waters—All waters inside of a line running from a marker on the bluff north of the mouth of the Buskin River at approximately 57°45.80′ North latitude, 152°28.38′ West longitude, to a point offshore at 57°45.35′ North latitude, 152°28.15′ West longitude, to a marker located onshore south of the river mouth at approximately 57°45.15′ North latitude, 152°28.65′ West longitude.

(C) All waters closed to commercial salmon fishing within 100 yards of the terminus of Selief Bay Creek.

(D) In Afognak Bay north and west of a line from the tip of Last Point to the tip of River Mouth Point.

(E) From August 15 through September 30, all waters 500 yards seaward of the terminus of Little Kitoi Creek.

(F) All fresh water systems of Afognak Island.

(iv) You must have a subsistence fishing permit for taking salmon, trout, and char for subsistence purposes. You must have a subsistence fishing permit for taking herring and bottomfish for subsistence purposes during the State commercial herring sac roe season from April 15 through June 30.

(v) The annual limit for a subsistence salmon fishing permit holder is as follows:

(A) In the Federal public waters of Kodiak Island, east of the line from Crag Point south to the westernmost point of Saltery Cove, including the waters of Woody and Long Islands, and the salt waters bordering this area within 1 mile of Kodiak Island, excluding the waters bordering Spruce Island, 25 salmon for the permit holder plus an additional 25 salmon for each member of the same household whose names are listed on the permit: an additional permit may be obtained upon request.

(B) In the remainder of the Kodiak Area not described in paragraph (e)(9)(v)(A) of this section, there is no annual harvest limit for a subsistence salmon fishing permit holder.

(vi) You must record on your subsistence permit the number of subsistence fish taken. You must record all harvested fish prior to leaving the fishing site, and must return the permit by the due date marked on permit.

(vii) You may take fish other than salmon by gear listed in this part unless restricted under the terms of a subsistence fishing permit.

(viii) You may take salmon only by gillnet, rod and reel, or seine.

(ix) You must be physically present at the net when the net is being fished.

(10) *Cook Inlet Area.* The Cook Inlet Area includes all waters of Alaska enclosed by a line extending east from Cape Douglas (58°51.10′ N. Lat.) and a line extending south from Cape Fairfield (148°50.25′ W. Long.).

(i) Unless restricted in this section, or unless restricted under the terms of a subsistence fishing permit, you may take fish at any time in the Cook Inlet Area. If you take rainbow/steelhead trout incidentally in subsistence net fisheries, you may retain them for subsistence purposes, unless otherwise prohibited or provided for in this section. With jigging gear through the ice or rod and reel gear in open waters there is an annual limit of two rainbow/steelhead trout 20 inches or longer, taken from Kenai Peninsula fresh waters.

(ii) You may take fish by gear listed in this part unless restricted in this section or under the terms of a subsistence fishing permit (as may be modified by this section). For all fish that must be marked and recorded on a permit in this section, they must be marked and recorded prior to leaving the fishing site. The fishing site includes the particular Federal public waters and/or adjacent shoreline from which the fish were harvested.

(iii) You may not take grayling or burbot for subsistence purposes.

(iv) You may take only salmon, trout, Dolly Varden, and other char under authority of a Federal subsistence fishing permit. Seasons, harvest and possession limits, and methods and means for take are the same as for the taking of those species under Alaska sport fishing regulations (5 AAC 56 and 5 AAC 57) unless modified herein. Additionally for Federally managed waters of the Kasilof and Kenai River drainages:

(A) Residents of Ninilchik may take sockeye, Chinook, coho, and pink salmon through a dip net and a rod and reel fishery on the upper mainstem of the Kasilof River from a Federal regulatory marker on the river below the outlet of Tustumena Lake downstream to a marker on the river approximately 2.8 miles below the Tustumena Lake boat ramp. Residents using rod and reel gear may fish with up to two baited single or treble hooks. Other species incidentally caught during the dip net and rod and reel fishery may be retained for subsistence uses, including up to 200 rainbow/steelhead trout taken through August 15. After 200 rainbow/steelhead trout have been taken in this fishery or after August 15, all rainbow/steelhead trout must be released unless otherwise provided for in this section. Before leaving the fishing site, all

retained fish must be recorded on the permit and marked by removing the dorsal fin. Harvests must be reported within 72 hours to the Federal fisheries manager upon leaving the fishing site.

(1) Fishing for sockeye and Chinook salmon will be allowed June 16–August 15.

(2) Fishing for coho and pink salmon will be allowed June 16–October 31.

(3) Fishing for sockeye, Chinook, coho, or pink salmon will end prior to regulatory end dates if the annual total harvest limit for that species is reached or superseded by Federal special action.

(4) Each household may harvest their annual sockeye, Chinook, coho, or pink salmon limits in one or more days, and each household member may fish with a dip net or a rod and reel during this time. Salmon taken in the Kenai River system dip net and rod and reel fishery will be included as part of each household's annual limit for the Kasilof River.

(i) For sockeye salmon—annual total harvest limit of 4,000; annual household limits of 25 for each permit holder and 5 additional for each household member;

(ii) For Chinook salmon—annual harvest limit of 500; annual household limit of 10 for each permit holder and 2 additional for each household member;

(iii) For coho salmon—annual total harvest limit of 500; annual household limits of 10 for each permit holder and 2 additional for each household member; and

(iv) For pink salmon—annual total harvest limit of 500; annual household limits of 10 for each permit holder and 2 additional for each household member.

(B) In addition to the dip net and rod and reel fishery on the upper mainstem of the Kasilof River described under paragraph (e)(10)(iv)(A) of this section, residents of Ninilchik may also take coho and pink salmon through a rod and reel fishery in Tustumena Lake. Before leaving the fishing site, all retained salmon must be recorded on the permit and marked by removing the dorsal fin. Seasons, areas, harvest and possession limits, and methods and means for take are the same as for the taking of these species under Alaska sport fishing regulations (5 AAC 56), except for the following methods and means, and harvest and possession limits:

(1) Fishing will be allowed with up to two baited single or treble hooks.

(2) For coho salmon 16 inches and longer, the daily harvest and possession limits are four per day and four in possession.

(3) For pink salmon 16 inches and longer, daily harvest and possession limits are six per day and six in possession.

(C) Resident fish species including lake trout, rainbow/steelhead trout, and Dolly Varden/Arctic char may be harvested in Federally managed waters of the Kasilof River drainage. Resident fish species harvested in the Kasilof River drainage under the conditions of a Federal subsistence permit must be marked by removing the dorsal fin immediately after harvest and recorded on the permit prior to leaving the fishing site.

(1) Lake trout may be harvested with rod and reel gear the entire year. For fish 20 inches or longer, daily harvest and possession limits are four per day and four in possession. For fish less than 20 inches, daily harvest and possession limits are 15 per day and 15 in possession.

(2) Dolly Varden/Arctic char may be harvested with rod and reel gear the entire year. In flowing waters, daily harvest and possession limits are four per day and four in possession. In lakes and ponds, daily harvest and possession limits are 10 fish per day and 10 in possession.

(3) Rainbow trout may be harvested with rod and reel gear the entire year for fish less than 20 inches in length. In flowing waters, daily harvest and possession limits are two per day and two in possession. In lakes and ponds, daily harvest and possession limits are five per day and five in possession.

(4) You may fish in Tustumena Lake with a gillnet, no longer than 10 fathoms, fished under the ice or jigging gear used through the ice under authority of a Federal subsistence fishing permit. The total annual harvest quota for this fishery is 200 lake trout, 200 rainbow trout, and 500 Dolly Varden/Arctic char. The use of a gillnet will be prohibited by special action after the harvest quota of any species has been met. For the jig fishery, annual household limits are 30 fish in any combination of lake trout, rainbow trout or Dolly Varden/Arctic char.

(i) You may harvest fish under the ice only in Tustumena Lake. Gillnets are not allowed within a ¼ mile radius of the mouth of any tributary to Tustumena Lake, or the outlet of Tustumena Lake.

(ii) Permits will be issued by the Federal fisheries manager or designated representative, and will be valid for the winter season, unless the season is closed by special action.

(iii) All harvests must be reported within 72 hours to the Federal fisheries manager upon leaving the fishing site. Reported information must include number of each species caught; number of each species retained; length, depth (number of meshes deep) and mesh size of gillnet fished; fishing site; and total hours fished. Harvest data on the permit must be filled out before transporting fish from the fishing site.

(iv) The gillnet must be checked at least once in every 48-hour period.

(v) For unattended gear, the permittee's name and address must be plainly and legibly inscribed on a stake at one end of the gillnet.

(vi) Incidentally caught fish may be retained and must be recorded on the permit before transporting fish from the fishing site.

(vii) Failure to return the completed harvest permit by May 31 may result in issuance of a violation notice and/or denial of a future subsistence permit.

(D) Residents of Hope, Cooper Landing, and Ninilchik may take only sockeye salmon through a dip net and a rod and reel fishery at one specified site on the Russian River, and sockeye, late-run Chinook, coho, and pink salmon through a dip net/rod and reel fishery at two specified sites on the Kenai River below Skilak Lake and as provided in this section. For Ninilchik residents, salmon taken in the Kasilof River Federal subsistence fish wheel, and dip net/rod and reel fishery will be included as part of each household's annual limit for the Kenai and Russian Rivers' dip net and rod and reel fishery. For both Kenai River fishing sites below Skilak Lake, incidentally caught fish may be retained for subsistence uses, except for early-run Chinook salmon (unless otherwise provided for), rainbow trout 18 inches or longer, and Dolly Varden 18 inches or longer, which must be released. For the Russian River fishing site, incidentally caught fish may be retained for subsistence uses, except for early- and late-run Chinook salmon, coho salmon, rainbow trout, and Dolly Varden, which must be released. Before leaving the fishing site, all retained fish must be recorded on the permit and marked by removing the dorsal fin. Harvests must be reported within 72 hours to the Federal fisheries manager upon leaving the fishing site, and permits must be returned to the manager by the due date listed on the permit. Chum salmon that are retained are to be included within the annual limit for sockeye salmon. Only residents of Cooper Landing, Hope, and Ninilchik may retain incidentally caught resident species.

(1) The household dip net and rod and reel gear fishery is limited to three sites:

(i) At the Kenai River Moose Range Meadows site, dip netting is allowed only from a boat from a Federal regulatory marker on the Kenai River at about river mile 29 downstream approximately 2.5 miles to another marker on the Kenai River at about river mile 26.5. Residents using rod and reel gear at this fishery site may fish from boats or from shore with up to two baited single or treble hooks June 15–August 31. Seasonal riverbank closures and motor boat restrictions are the same as those listed in State of Alaska fishing regulations (5 AAC 56 and 5 AAC 57 and 5 AAC 77.540).

(ii) At the Kenai River Mile 48 site, dip netting is allowed while either standing in the river or from a boat, from Federal regulatory markers on both sides of the Kenai River at about river mile 48 (approximately 2 miles below the outlet of Skilak Lake) downstream approximately 2.5 miles to a marker on the Kenai River at about river mile 45.5. Residents using rod and reel gear at this fishery site may fish from boats or from shore with up to two baited single or treble hooks June 15–August 31. Seasonal riverbank closures and motor boat restrictions are the same as those listed in State of Alaska fishing regulations (5 AAC 56, 5 AAC 57, and 5 AAC 77.540).

(iii) At the Russian River Falls site, dip netting is allowed from a Federal regulatory marker near the upstream end of the fish ladder at Russian River Falls downstream to a Federal regulatory marker approximately 600 yards below Russian River Falls. Residents using rod and reel gear at this fishery site may not fish with bait at any time.

(2) Fishing seasons are as follows:

(i) For sockeye salmon at all fishery sites: June 15–August 15;

(ii) For late-run Chinook, pink, and coho salmon at both Kenai River fishery sites only: July 16–September 30; and

(iii) Fishing for sockeye, late-run Chinook, coho, or pink salmon will close by special action prior to regulatory end dates if the annual total harvest limit for that species is reached or superseded by Federal special action.

(3) Each household may harvest their annual sockeye, late-run Chinook, coho, or pink salmon limits in one or more days, and each household member may fish with a dip net or rod and reel during this time. Salmon taken in the Kenai River system dip net and rod and reel fishery by Ninilchik households will be included as part of those household's annual limits for the Kasilof River.

(i) For sockeye salmon—annual total harvest limit of 4,000 (including any retained chum salmon); annual household limits of 25 for each permit holder and 5 additional for each household member;

(ii) For late-run Chinook salmon—annual total harvest limit of 1,000; annual household limits of 10 for each permit holder and 2 additional for each household member;

(iii) For coho salmon—annual total harvest limit of 3,000; annual household limits of 20 for each permit holder and 5 additional for each household member; and

(iv) For pink salmon—annual total harvest limit of 2,000; annual household limits of 15 for each permit holder and 5 additional for each household member.

(E) For Federally managed waters of the Kenai River and its tributaries, in addition to the dip net and rod and reel fisheries on the Kenai and Russian rivers described under paragraph (e)(10)(iv)(D) of this section, residents of Hope, Cooper Landing, and Ninilchik may take sockeye, Chinook, coho, pink, and chum salmon through a separate rod and reel fishery in the Kenai River drainage. Before leaving the fishing site, all retained fish must be recorded on the permit and marked by removing the dorsal fin. Permits must be returned to the Federal fisheries manager by the due date listed on the permit. Incidentally caught fish, other than salmon, are subject to regulations found in paragraphs (e)(10)(iv)(F) and (G) of this section. Seasons, areas (including seasonal riverbank closures), harvest and possession limits, and methods and means (including motor boat restrictions) for take are the same as for the taking of these salmon species under State of Alaska fishing regulations (5 AAC 56, 5 AAC 57 and 5 AAC 77.54), except for the following harvest and possession limits:

(1) In the Kenai River below Skilak Lake, fishing is allowed with up to two baited single or treble hooks June 15–August 31.

(2) For early-run Chinook salmon less than 46 inches or 55 inches or longer, daily harvest and possession limits are two per day and two in possession.

(3) For late-run Chinook salmon 20 inches and longer, daily harvest and possession limits are two per day and two in possession.

(4) Annual harvest limits for any combination of early- and late-run Chinook salmon are four for each permit holder.

(5) For other salmon 16 inches and longer, the combined daily harvest and possession limits are six per day and six in possession, of which no more than four per day and four in possession may be coho salmon, except for the Sanctuary Area and Russian River, for which no more than two per day and two in possession may be coho salmon.

(F) For Federally managed waters of the Kenai River and its tributaries below Skilak Lake outlet at river mile 50, residents of Cooper Landing, Hope, and Ninilchik may take resident fish species including lake trout, rainbow trout, and Dolly Varden/Arctic char with jigging gear through the ice or rod and reel gear in open waters. Resident fish species harvested in the Kenai River drainage under the conditions of a Federal subsistence permit must be marked by removal of the dorsal fin immediately after harvest and recorded on the permit prior to leaving the fishing site. Seasons, areas (including seasonal riverbank closures), harvest and possession limits, and methods and means (including motor boat restrictions) for take are the same as for the taking of these resident species under State of Alaska fishing regulations (5 AAC 56, 5 AAC 57, and 5 AAC 77.54), except for the following harvest and possession limits:

(1) For lake trout 20 inches or longer, daily harvest and possession limits are four per day and four in possession. For fish less than 20 inches, daily harvest and possession limits are 15 per day and 15 in possession.

(*2*) In flowing waters, daily harvest and possession limits for Dolly Varden/Arctic char less than 18 inches in length are one per day and one in possession. In lakes and ponds, daily harvest and possession limits are two per day and two in possession. Only one of these fish can be 20 inches or longer.

(*3*) In flowing waters, daily harvest and possession limits for rainbow/steelhead trout are one per day and one in possession and must be less than 18 inches in length. In lakes and ponds, daily harvest and possession limits are two per day and two in possession of which only one fish 20 inches or longer may be harvested daily.

(G) For Federally managed waters of the upper Kenai River and its tributaries above Skilak Lake outlet at river mile 50, residents of Cooper Landing, Hope, and Ninilchik may take resident fish species including lake trout, rainbow trout, and Dolly Varden/Arctic char with jigging gear through the ice or rod and reel gear in open waters. Resident fish species harvested in the Kenai River drainage under the conditions of a Federal subsistence permit must be marked by removal of the dorsal fin immediately after harvest and recorded on the permit prior to leaving the fishing site. Seasons, areas (including seasonal riverbank closures), harvest and possession limits, and methods and

means (including motor boat restrictions) for take are the same as for the taking of these resident species under Alaska fishing regulations (5 AAC 56, 5 AAC 57, 5 AAC 77.54), except for the following harvest and possession limits:

(1) For lake trout 20 inches or longer, daily harvest and possession limits are four per day and four in possession. For fish less than 20 inches, daily harvest and possession limits are 15 fish per day and 15 in possession. For Hidden Lake, daily harvest and possession limits are two per day and two in possession regardless of size.

(2) In flowing waters, daily harvest and possession limits for Dolly Varden/Arctic char less than 16 inches are one per day and one in possession. In lakes and ponds, daily harvest and possession limits are two per day and two in possession of which only one fish 20 inches or longer may be harvested daily.

(3) In flowing waters, daily harvest and possession limits for rainbow/steelhead trout are one per day and one in possession and it must be less than 16 inches in length. In lakes and ponds, daily harvest and possession limits are two per day and two in possession of which only one fish 20 inches or longer may be harvested daily.

(H) Residents of Ninilchik may harvest sockeye, Chinook, coho, and pink salmon through a fish wheel fishery in the Federal public waters of the upper mainstem of the Kasilof River. Residents of Ninilchik may retain other species incidentally caught in the Kasilof River except for rainbow/steelhead trout, which must be released and returned unharmed to the water.

(1) Only one fish wheel can be operated on the Kasilof River. The fish wheel must have a live box, must be monitored when fishing, must be stopped from fishing when it is not being monitored or used, and must be installed and operated in compliance with any regulations and restrictions for its use within the Kenai National Wildlife Refuge.

(2) One registration permit will be available and will be awarded by the Federal in-season fishery manager, in consultation with the Kenai National Wildlife Refuge manager, based on the merits of the operation plan. The registration permit will be issued to an organization that, as the fish wheel owner, will be responsible for its construction, installation, operation, use, and removal in consultation with the Federal fishery manager. The owner may not rent or lease the fish wheel for personal gain. As part of the permit, the organization must:

(i) Prior to the season, provide a written operation plan to the Federal fishery manager including a description of how fishing time and fish will be offered and distributed among households and residents of Ninilchik;

(ii) During the season, mark the fish wheel with a wood, metal, or plastic plate at least 12 inches high by 12 inches wide that is permanently affixed and plainly visible, and that contains the following information in letters and numerals at least 1 inch high: registration permit number; organization's name and address; and primary contact person name and telephone number;

(iii) After the season, provide written documentation of required evaluation information to the Federal fishery manager including, but not limited to, person or households operating the gear, hours of operation, and number of each species caught and retained or released.

(3) People operating the fish wheel must:

(i) Have a valid Federal subsistence fishing permit in their possession;

(ii) If they are not the fish wheel owner, attach an additional wood, metal, or plastic plate at least 12 inches high by 12 inches wide to the fish wheel that is plainly visible, and that contains their fishing permit number, name, and address in letters and numerals at least 1 inch high;

(iii) Remain on site to monitor the fish wheel and remove all fish at least every hour;

(iv) Before leaving the site, mark all retained fish by removing their dorsal fin and record all retained fish on their fishing permit; and

(v) Within 72 hours of leaving the site, report their harvest to the Federal fisheries manager.

(4) The fish wheel owner (organization) may operate the fish wheel for subsistence purposes on behalf of residents of Ninilchik by requesting a subsistence fishing permit that:

(i) Identifies a person who will be responsible for operating the fish wheel;

(ii) Includes provisions for recording daily catches, the household to whom the catch was given, and other information determined to be necessary for effective resource management by the Federal fishery manager.

(5) Fishing will be allowed from June 16 through October 31 on the Kasilof River unless closed or otherwise restricted by Federal special action.

(6) Salmon taken in the fish wheel fishery will be included as part of dip net/rod and reel fishery annual total harvest limits for the Kasilof River and as part of dip net/rod and reel household annual limits of participating households.

(7) Fishing for each salmon species will end and the fishery will be closed by Federal special action prior to regulatory end dates if the annual total harvest limit for that species is reached or superseded by Federal special action.

(8) This regulation expires December 31, 2011, or 3 years after the first installation of the fish wheel, which ever comes first, or unless renewed by the Federal Subsistence Board.

(9) You may take smelt with dip nets in fresh water only from April 1–June 15. There are no harvest or possession limits for smelt.

(10) Gillnets may not be used in fresh water, except for the taking of whitefish in the Tyone River drainage and as otherwise provided for in this Cook Inlet section.

(11) *Prince William Sound Area.* The Prince William Sound Area includes all waters and drainages of Alaska between the longitude of Cape Fairfield and the longitude of Cape Suckling.

(i) You may take fish, other than rainbow/steelhead trout, in the Prince William Sound Area only under authority of a subsistence fishing permit, except that a permit is not required to take eulachon. You make not take rainbow/steelhead trout, except as otherwise provided for in paragraph (e)(11) of this section.

(A) In the Prince William Sound Area within Chugach National Forest and in the Copper River drainage downstream of Haley Creek you may accumulate Federal subsistence fishing harvest limits with harvest limits under State of Alaska sport fishing regulations provided that accumulation of fishing harvest limits does not occur during the same day.

(B) You may accumulate harvest limits of salmon authorized for the Copper River drainage upstream from Haley Creek with harvest limits for salmon authorized under State of Alaska sport fishing regulations.

(ii) You may take fish by gear listed in paragraph (b)(1) of this section unless restricted in this section or under the terms of a subsistence fishing permit.

(iii) If you catch rainbow/steelhead trout incidentally in other subsistence net fisheries, you may retain them for subsistence purposes, unless restricted in this section.

(iv) In the Copper River drainage, you may take salmon only in the waters of the Upper Copper River District, or in the vicinity of the Native Village of Batzulnetas.

(v) In the Upper Copper River District, you may take salmon only by fish wheels, rod and reel, or dip nets.

(vi) Rainbow/steelhead trout and other freshwater fish caught incidentally

to salmon by fish wheel in the Upper Copper River District may be retained.

(vii) Freshwater fish other than rainbow/steelhead trout caught incidentally to salmon by dip net in the Upper Copper River District may be retained. Rainbow/steelhead trout caught incidentally to salmon by dip net in the Upper Copper River District must be released unharmed to the water.

(viii) You may not possess salmon taken under the authority of an Upper Copper River District subsistence fishing permit, or rainbow/steelhead trout caught incidentally to salmon by fish wheel, unless the anal fin has been immediately removed from the fish. You must immediately record all retained fish on the subsistence permit. Immediately means prior to concealing the fish from plain view or transporting the fish more than 50 feet from where the fish was removed from the water.

(ix) You may take salmon in the Upper Copper River District from May 15 through September 30 only.

(x) The total annual harvest limit for subsistence salmon fishing permits in combination for the Glennallen Subdistrict and the Chitina Subdistrict is as follows:

(A) For a household with 1 person, 30 salmon, of which no more than 5 may be Chinook salmon taken by dip net and no more than 5 Chinook taken by rod and reel;

(B) For a household with 2 persons, 60 salmon, of which no more than 5 may be Chinook salmon taken by dip net and no more than 5 Chinook taken by rod and reel, plus 10 salmon for each additional person in a household over 2 persons, except that the household's limit for Chinook salmon taken by dip net or rod and reel does not increase;

(C) Upon request, permits for additional salmon will be issued for no more than a total of 200 salmon for a permit issued to a household with 1 person, of which no more than 5 may be Chinook salmon taken by dip net and no more than 5 Chinook taken by rod and reel, or no more than a total of 500 salmon for a permit issued to a household with 2 or more persons, of which no more than 5 may be Chinook salmon taken by dip net and no more than 5 Chinook taken by rod and reel.

(xi) The following apply to Upper Copper River District subsistence salmon fishing permits:

(A) Only one subsistence fishing permit per subdistrict will be issued to each household per year. If a household has been issued permits for both subdistricts in the same year, both permits must be in your possession and readily available for inspection while fishing or transporting subsistence-taken fish in either subdistrict. A qualified household may also be issued a Batzulnetas salmon fishery permit in the same year;

(B) Multiple types of gear may be specified on a permit, although only one unit of gear may be operated at any one time;

(C) You must return your permit no later than October 31 of the year in which the permit is issued, or you may be denied a permit for the following year;

(D) A fish wheel may be operated only by one permit holder at one time; that permit holder must have the fish wheel marked as required by paragraph (e)(11) of this section and during fishing operations;

(E) Only the permit holder and the authorized member(s) of the household listed on the subsistence permit may take salmon;

(F) You must personally operate your fish wheel or dip net;

(G) You may not loan or transfer a subsistence fish wheel or dip net permit except as permitted.

(xii) If you are a fish wheel owner:

(A) You must register your fish wheel with ADF&G or the Federal Subsistence Board;

(B) Your registration number and a wood, metal, or plastic plate at least 12 inches high by 12 inches wide bearing either your name and address, or your Alaska driver's license number, or your Alaska State identification card number in letters and numerals at least 1 inch high, must be permanently affixed and plainly visible on the fish wheel when the fish wheel is in the water;

(C) Only the current year's registration number may be affixed to the fish wheel; you must remove any other registration number from the fish wheel;

(D) You must check your fish wheel at least once every 10 hours and remove all fish;

(E) You are responsible for the fish wheel; you must remove the fish wheel from the water at the end of the permit period;

(F) You may not rent, lease, or otherwise use your fish wheel used for subsistence fishing for personal gain.

(xiii) If you are operating a fish wheel:

(A) You may operate only one fish wheel at any one time;

(B) You may not set or operate a fish wheel within 75 feet of another fish wheel;

(C) No fish wheel may have more than two baskets;

(D) If you are a permittee other than the owner, you must attach an additional wood, metal, or plastic plate at least 12 inches high by 12 inches wide, bearing your name and address in letters and numerals at least 1 inch high, to the fish wheel so that the name and address are plainly visible.

(xiv) A subsistence fishing permit may be issued to a village council, or other similarly qualified organization whose members operate fish wheels for subsistence purposes in the Upper Copper River District, to operate fish wheels on behalf of members of its village or organization. The following additional provisions apply to subsistence fishing permits issued under this paragraph (e)(11)(xiv) of this section:

(A) The permit will list all households and household members for whom the fish wheel is being operated. The permit will identify a person who will be responsible for each fish wheel in a similar manner to a fish wheel owner as described in paragraph (e)(11)(xii) of this section;

(B) The allowable harvest may not exceed the combined seasonal limits for the households listed on the permit; the permittee will notify the ADF&G or Federal Subsistence Board when households are added to the list, and the seasonal limit may be adjusted accordingly;

(C) Members of households listed on a permit issued to a village council or other similarly qualified organization are not eligible for a separate household subsistence fishing permit for the Upper Copper River District;

(D) The permit will include provisions for recording daily catches for each fish wheel; location and number of fish wheels; full legal name of the individual responsible for the lawful operation of each fish wheel as described in paragraph (e)(11)(xii) of this section; and other information determined to be necessary for effective resource management.

(xv) You may take salmon in the vicinity of the former Native village of Batzulnetas only under the authority of a Batzulnetas subsistence salmon fishing permit available from the National Park Service under the following conditions:

(A) You may take salmon only in those waters of the Copper River between National Park Service regulatory markers located near the mouth of Tanada Creek and approximately one-half mile downstream from that mouth and in Tanada Creek between National Park Service regulatory markers identifying the open waters of the creek;

(B) You may use only fish wheels, dip nets, and rod and reel on the Copper River and only dip nets, spears, fyke nets, and rod and reel in Tanada Creek. One fyke net and associated lead may be

used in Tanada Creek upstream of the National Park Service weir;

(C) You may take salmon only from May 15 through September 30 or until the season is closed by special action;

(D) You may retain Chinook salmon taken in a fish wheel in the Copper River. You must return to the water unharmed any Chinook salmon caught in Tanada Creek;

(E) You must return the permit to the National Park Service no later than October 15 of the year the permit was issued;

(F) You may only use a fyke net after consultation with the in-season manager. You must be present when the fyke net is actively fishing. You may take no more than 1,000 sockeye salmon in Tanada Creek with a fyke net;

(xvi) You may take pink salmon for subsistence purposes from fresh water with a dip net from May 15 through September 30, 7 days per week, with no harvest or possession limits in the following areas:

(A) Green Island, Knight Island, Chenega Island, Bainbridge Island, Evans Island, Elrington Island, Latouche Island, and adjacent islands, and the mainland waters from the outer point of Granite Bay located in Knight Island Passage to Cape Fairfield;

(B) Waters north of a line from Porcupine Point to Granite Point, and south of a line from Point Lowe to Tongue Point.

(12) *Yakutat Area.* The Yakutat Area includes all waters and drainages of Alaska between the longitude of Cape Suckling and the longitude of Cape Fairweather.

(i) Unless restricted in this section or unless restricted under the terms of a subsistence fishing permit, you may take fish at any time in the Yakutat Area.

(ii) You may take salmon, trout (other than steelhead), and char only under authority of a subsistence fishing permit. You may take steelhead trout only in the Situk and Ahrnklin Rivers and only under authority of a Federal subsistence fishing permit.

(iii) If you take salmon, trout, or char incidentally by gear operated under the terms of a subsistence permit for salmon, you may retain them for subsistence purposes. You must report any salmon, trout, or char taken in this manner on your permit calendar.

(iv) You may take fish by gear listed in this part unless restricted in this section or under the terms of a subsistence fishing permit. In areas where use of rod and reel is allowed, you may use artificial fly, lure, or bait when fishing with rod and reel, unless restricted by Federal permit. If you use bait, you must retain all Federally regulated fish species caught, and they apply to your applicable daily and annual harvest limits for that species. For streams with steelhead, once your daily or annual limit of steelhead is harvested, you may no longer fish with bait for any species.

(v) In the Situk River, each subsistence salmon fishing permit holder shall attend his or her gillnet at all times when it is being used to take salmon.

(vi) You may block up to two-thirds of a stream with a gillnet or seine used for subsistence fishing.

(vii) You must immediately remove both lobes of the caudal (tail) fin from subsistence-caught salmon when taken.

(viii) You may not possess subsistence-taken and sport-taken salmon on the same day.

(ix) You must possess a subsistence fishing permit to take Dolly Varden. The daily harvest and possession limit is 10 Dolly Varden of any size.

(13) *Southeastern Alaska Area.* The Southeastern Alaska Area includes all waters between a line projecting southwest from the westernmost tip of Cape Fairweather and Dixon Entrance.

(i) Unless restricted in this section or under the terms of a subsistence fishing permit, you may take fish other than salmon, trout, grayling, and char in the Southeastern Alaska Area at any time.

(ii) You must possess a subsistence fishing permit to take salmon, trout, grayling, or char. You must possess a subsistence fishing permit to take eulachon from any freshwater stream flowing into fishing Sections 1C or 1D.

(iii) In the Southeastern Alaska Area, a rainbow trout is defined as a fish of the species *Oncorhyncus mykiss* less than 22 inches in overall length. A steelhead is defined as a rainbow trout with an overall length of 22 inches or larger.

(iv) In areas where use of rod and reel is allowed, you may use artificial fly, lure, or bait when fishing with rod and reel, unless restricted by Federal permit. If you use bait, you must retain all Federally regulated fish species caught, and they apply to your applicable daily, seasonal, and annual harvest limits for that species.

(A) For streams with steelhead, once your daily, seasonal, or annual limit of steelhead is harvested, you may no longer fish with bait for any species.

(B) Unless otherwise specified in this paragraph (e)(13) of this section, allowable gear for salmon or steelhead is restricted to gaffs, spears, gillnets, seines, dip nets, cast nets, handlines, or rod and reel.

(v) Unless otherwise specified in this paragraph (e)(13) of this section, you may use a handline for snagging salmon or steelhead.

(vi) You may fish with a rod and reel within 300 feet of a fish ladder unless the site is otherwise posted by the USDA Forest Service. You may not fish from, on, or in a fish ladder.

(vii) You may not accumulate Federal subsistence harvest limits authorized for the Southeastern Alaska Area with any harvest limits authorized under any State of Alaska fishery with the following exception: Annual or seasonal Federal subsistence harvest limits may be accumulated with State sport fishing harvest limits provided that accumulation of harvest limits does not occur during the same day.

(viii) If you take salmon, trout, or char incidentally with gear operated under terms of a subsistence permit for other salmon, they may be kept for subsistence purposes. You must report any salmon, trout, or char taken in this manner on your subsistence fishing permit.

(ix) No permits for the use of nets will be issued for the salmon streams flowing across or adjacent to the road systems within the city limits of Petersburg, Wrangell, and Sitka.

(x) You must immediately remove both lobes of the caudal (tail) fin of subsistence-caught salmon when taken.

(xi) You may not possess subsistence-taken and sport-taken fish of a given species on the same day.

(xii) If a harvest limit is not otherwise listed for sockeye in paragraph (e)(13) of this section, the harvest limit for sockeye salmon is the same as provided for in adjacent State subsistence or personal use fisheries. If a harvest limit is not established for the State subsistence or personal use fisheries, the possession limit is 10 sockeye and the annual harvest limit is 20 sockeye per household for that stream.

(xiii) The Sarkar River system above the bridge is closed to the use of all nets by both Federally qualified and non-Federally qualified users.

(xiv) You may take Chinook, sockeye, and coho salmon in the mainstem of the Stikine River only under the authority of a Federal subsistence fishing permit. Each Stikine River permit will be issued to a household. Only dip nets, spears, gaffs, rod and reel, beach seine, or gillnets not exceeding 15 fathoms in length may be used. The maximum gillnet mesh size is 5½; inches, except during the Chinook season when the maximum gillnet mesh size is 8 inches.

(A) You may take Chinook salmon from May 15 through June 20. The

annual limit is 5 Chinook salmon per household.

(B) You may take sockeye salmon from June 21 through July 31. The annual limit is 40 sockeye salmon per household.

(C) You may take coho salmon from August 1 through October 1. The annual limit is 20 coho salmon per household.

(D) You may retain other salmon taken incidentally by gear operated under terms of this permit. The incidentally taken salmon must be reported on your permit calendar.

(E) The total annual guideline harvest level for the Stikine River fishery is 125 Chinook, 600 sockeye, and 400 coho salmon. All salmon harvested, including incidentally taken salmon, will count against the guideline for that species.

(xv) You may take coho salmon with a Federal salmon fishing permit. There is no closed season. The daily harvest limit is 20 coho salmon per household. Only dip nets, spears, gaffs, handlines, and rod and reel may be used. There are specific rules to harvest any salmon on the Stikine River, and you must have a separate Stikine River subsistence salmon fishing permit to take salmon on the Stikine River.

(xvi) Unless noted on a Federal subsistence harvest permit, there are no harvest limits for pink or chum salmon.

(xvii) Unless otherwise specified in paragraph (e)(13) of this section, you may take steelhead under the terms of a subsistence fishing permit. The open season is January 1 through May 31. The daily household harvest and possession limit is one with an annual household limit of two. You may only use a dip net, gaff, handline, spear, or rod and reel. The permit conditions and systems to receive special protection will be determined by the local Federal fisheries manager in consultation with ADF&G.

(xviii) You may take steelhead trout on Prince of Wales and Kosciusko Islands under the terms of Federal subsistence fishing permits. You must obtain a separate permit for the winter and spring seasons.

(A) The winter season is December 1 through the last day of February, with a harvest limit of two fish per household. You may use only a dip net, handline, spear, or rod and reel. The winter season may be closed when the harvest level cap of 100 steelhead for the Prince of Wales/Kosciusko Islands has been reached. You must return your winter season permit within 15 days of the close of the season and before receiving another permit for a Prince of Wales/Kosciusko steelhead subsistence fishery. The permit conditions and systems to receive special protection will be determined by the local Federal fisheries manager in consultation with ADF&G.

(B) The spring season is March 1 through May 31, with a harvest limit of five fish per household. You may use only a dip net, handline, spear, or rod and reel. The spring season may be closed prior to May 31 if the harvest quota of 600 fish minus the number of steelhead harvested in the winter subsistence steelhead fishery is reached. You must return your spring season permit within 15 days of the close of the season and before receiving another permit for a Prince of Wales/Kosciusko steelhead subsistence fishery. The permit conditions and systems to receive special protection will be determined by the local Federal fisheries manager in consultation with ADF&G.

(xix) In addition to the requirement for a Federal subsistence fishing permit, the following restrictions for the harvest of Dolly Varden, brook trout, grayling, cutthroat, and rainbow trout apply:

(A) The daily household harvest and possession limit is 20 Dolly Varden; there is no closed season or size limit;

(B) The daily household harvest and possession limit is 20 brook trout; there is no closed season or size limit;

(C) The daily household harvest and possession limit is 20 grayling; there is no closed season or size limit;

(D) The daily household harvest limit is 6 and the household possession limit is 12 cutthroat or rainbow trout in combination; there is no closed season or size limit;

(E) You may only use a rod and reel;

(F) The permit conditions and systems to receive special protection will be determined by the local Federal fisheries manager in consultation with ADF&G.

(xx) There is no subsistence fishery for any salmon on the Taku River.

■ 5. In subpart D of 36 CFR part 242 and 50 CFR part 100, § ___.28 is added to read as follows:

§ ___.28 Subsistence taking of shellfish.

(a) *Covered species.*

(1) Regulations in this section apply to subsistence taking of Dungeness crab, king crab, Tanner crab, shrimp, clams, abalone, and other shellfish or their parts.

(2) You may take shellfish for subsistence uses at any time in any area of the public lands by any method unless restricted by this section.

(b) *Methods, means, and general restrictions.*

(1) The harvest limit specified in this section for a subsistence season for a species and the State harvest limit set for a State season for the same species are not cumulative. This means that if you have taken the harvest limit for a particular species under a subsistence season specified in this section, you may not, after that, take any additional shellfish of that species under any other harvest limit specified for a State season.

(2) Unless otherwise provided in this section or under terms of a required subsistence fishing permit (as may be modified by this section), you may use the following legal types of gear to take shellfish:

(i) Abalone iron;

(ii) Diving gear;

(iii) A grappling hook;

(iv) A handline;

(v) A hydraulic clam digger;

(vi) A mechanical clam digger;

(vii) A pot;

(viii) A ring net;

(ix) A scallop dredge;

(x) A sea urchin rake;

(xi) A shovel; and

(xii) A trawl.

(3) You are prohibited from buying or selling subsistence-taken shellfish, their parts, or their eggs, unless otherwise specified.

(4) You may not use explosives and chemicals, except that you may use chemical baits or lures to attract shellfish.

(5) Marking requirements for subsistence shellfish gear are as follows:

(i) You must plainly and legibly inscribe your first initial, last name, and address on a keg or buoy attached to unattended subsistence fishing gear, except when fishing through the ice, when you may substitute for the keg or buoy a stake inscribed with your first initial, last name, and address inserted in the ice near the hole; subsistence fishing gear may not display a permanent ADF&G vessel license number;

(ii) Kegs or buoys attached to subsistence crab pots also must be inscribed with the name or United States Coast Guard number of the vessel used to operate the pots.

(6) Pots used for subsistence fishing must comply with the escape mechanism requirements found in § 100.27(b)(2).

(7) You may not mutilate or otherwise disfigure a crab in any manner which would prevent determination of the minimum size restrictions until the crab has been processed or prepared for consumption.

(c) *Taking shellfish by designated harvest permit.*

(1) Any species of shellfish that may be taken by subsistence fishing under

this part may be taken under a designated harvest permit.

(2) If you are a Federally-qualified subsistence user (beneficiary), you may designate another Federally-qualified subsistence user to take shellfish on your behalf. The designated fisherman must obtain a designated harvest permit prior to attempting to harvest shellfish and must return a completed harvest report. The designated fisherman may harvest for any number of beneficiaries but may have no more than two harvest limits in his/her possession at any one time.

(3) The designated fisherman must have in possession a valid designated harvest permit when taking, attempting to take, or transporting shellfish taken under this section, on behalf of a beneficiary.

(4) You may not fish with more than one legal limit of gear as established by this section.

(5) You may not designate more than one person to take or attempt to take shellfish on your behalf at one time. You may not personally take or attempt to take shellfish at the same time that a designated fisherman is taking or attempting to take shellfish on your behalf.

(d) *Permit requirements.* If a subsistence shellfish permit is required by this section, the following conditions apply unless otherwise specified by the subsistence regulations in this section:

(1) You may not take shellfish for subsistence in excess of the limits set out in the permit unless a different limit is specified in this section.

(2) You must obtain a permit prior to subsistence fishing.

(3) You must have the permit in your possession and readily available for inspection while taking or transporting the species for which the permit is issued.

(4) The permit may designate the species and numbers of shellfish to be harvested, time and area of fishing, the type and amount of fishing gear and other conditions necessary for management or conservation purposes.

(5) If specified on the permit, you must keep accurate daily records of the catch involved, showing the number of shellfish taken by species, location and date of the catch, and such other information as may be required for management or conservation purposes.

(6) You must complete and submit subsistence fishing reports at the time specified for each particular area and fishery.

(7) If the return of catch information necessary for management and conservation purposes is required by a subsistence fishing permit and you fail to comply with such reporting requirements, you are ineligible to receive a subsistence permit for that activity during the following calendar year, unless you demonstrate that failure to report was due to loss in the mail, accident, sickness, or other unavoidable circumstances.

(e) *Subsistence take by commercial vessels.* No fishing vessel which is commercially licensed and registered for shrimp pot, shrimp trawl, king crab, Tanner crab, or Dungeness crab fishing may be used for subsistence take during the period starting 14 days before an opening and ending 14 days after the closure of a respective open season in the area or areas for which the vessel is registered. However, if you are a commercial fisherman, you may retain shellfish for your own use from your lawfully taken commercial catch.

(f) *Size restrictions.* You may not take or possess shellfish smaller than the minimum legal size limits.

(g) *Unlawful possession of subsistence shellfish.* You may not possess, transport, give, receive, or barter shellfish or their parts taken in violation of Federal or State regulations.

(h) *Charter and related operations.*

(1) An owner, operator, or employee of a lodge, charter vessel, or other enterprise that furnishes food, lodging, or guide services may not furnish to a client or guest of that enterprise, shellfish that has been taken under this section, unless:

(i) The shellfish has been taken with gear deployed and retrieved by the client or guest who is a Federally qualified subsistence user;

(ii) The gear has been marked with the client's or guest's name and address; and

(iii) The shellfish is to be consumed by the client or guest or is consumed in the presence of the client or guest.

(2) The captain and crewmembers of a charter vessel may not deploy, set, or retrieve their own gear in a subsistence shellfish fishery when that vessel is being chartered.

(i) *Subsistence shellfish areas and pertinent restrictions.*

(1) *Southeastern Alaska—Yakutat Area.* No marine waters are currently identified under Federal subsistence management jurisdiction, except the marine waters occurring in the vicinity of Makhnati Island as described in § __.3(b)(5) of these regulations.

(2) *Prince William Sound Area.* No marine waters are currently identified under Federal subsistence management jurisdiction.

(3) *Cook Inlet Area.*

(i) You may take shellfish for subsistence purposes only as allowed in paragraph (i)(3) of this section.

(ii) You may not take king crab, Dungeness crab, or shrimp for subsistence purposes.

(iii) In the subsistence taking of Tanner crab:

(A) Male Tanner crab may be taken only from July 15 through March 15;

(B) The daily harvest and possession limit is 5 male Tanner crabs;

(C) Only male Tanner crabs 5½; inches or greater in width of shell may be taken or possessed;

(D) No more than two pots per person, regardless of type, with a maximum of two pots per vessel, regardless of type, may be used to take Tanner crab.

(iv) In the subsistence taking of clams:

(A) The daily harvest and possession limit for littleneck clams is 1,000 and the minimum size is 1.5 inches in length;

(B) The daily harvest and possession limit for butter clams is 700 and the minimum size is 2.5 inches in length.

(v) Other than as specified in this section, there are no harvest, possession, or size limits for other shellfish, and the season is open all year.

(4) *Kodiak Area.*

(i) You may take crab for subsistence purposes only under the authority of a subsistence crab fishing permit issued by the ADF&G.

(ii) The operator of a commercially licensed and registered shrimp fishing vessel must obtain a subsistence fishing permit from the ADF&G before subsistence shrimp fishing during a State closed commercial shrimp fishing season or within a closed commercial shrimp fishing district, section, or subsection. The permit must specify the area and the date the vessel operator intends to fish. No more than 500 pounds (227 kg) of shrimp may be in possession aboard the vessel.

(iii) The daily harvest and possession limit is 12 male Dungeness crabs per person; only male Dungeness crabs with a shell width of 6½ inches or greater may be taken or possessed. Taking of Dungeness crab is prohibited in water 25 fathoms or more in depth during the 14 days immediately before the State opening of a commercial king or Tanner crab fishing season in the location.

(iv) In the subsistence taking of king crab:

(A) The annual limit is three crabs per household; only male king crab with shell width of 7 inches or greater may be taken or possessed.

(B) All crab pots used for subsistence fishing and left in saltwater unattended longer than a 2-week period must have all bait and bait containers removed and all doors secured fully open.

(C) You may only use one crab pot, which may be of any size, to take king crab.

(D) You may take king crab only from June 1 through January 31, except that the subsistence taking of king crab is prohibited in waters 25 fathoms or greater in depth during the period 14 days before and 14 days after State open commercial fishing seasons for red king crab, blue king crab, or Tanner crab in the location.

(E) The waters of the Pacific Ocean enclosed by the boundaries of Womens Bay, Gibson Cove, and an area defined by a line ½ mile on either side of the mouth of the Karluk River, and extending seaward 3,000 feet, and all waters within 1,500 feet seaward of the shoreline of Afognak Island are closed to the harvest of king crab except by Federally qualified subsistence users.

(v) In the subsistence taking of Tanner crab:

(A) You may not use more than five crab pots to take Tanner crab.

(B) You may not take Tanner crab in waters 25 fathoms or greater in depth during the 14 days immediately before the opening of a State commercial king or Tanner crab fishing season in the location.

(C) The daily harvest and possession limit per person is 12 male crabs with a shell width 5½ inches or greater.

(5) *Alaska Peninsula—Aleutian Islands Area.*

(i) The operator of a commercially licensed and registered shrimp fishing vessel must obtain a subsistence fishing permit from the ADF&G prior to subsistence shrimp fishing during a closed State commercial shrimp fishing season or within a closed commercial shrimp fishing district, section, or subsection; the permit must specify the area and the date the vessel operator intends to fish; no more than 500 pounds (227 kg) of shrimp may be in possession aboard the vessel.

(ii) The daily harvest and possession limit is 12 male Dungeness crabs per person; only crabs with a shell width of 5½ inches or greater may be taken or possessed.

(iii) In the subsistence taking of king crab:

(A) The daily harvest and possession limit is six male crabs per person; only crabs with a shell width of 6½ inches or greater may be taken or possessed;

(B) All crab pots used for subsistence fishing and left in saltwater unattended longer than a 2-week period must have all bait and bait containers removed and all doors secured fully open;

(C) You may take crabs only from June 1 through January 31.

(iv) The daily harvest and possession limit is 12 male Tanner crabs per person; only crabs with a shell width of 5½ inches or greater may be taken or possessed.

(6) *Bering Sea Area.*

(i) In that portion of the area north of the latitude of Cape Newenham, shellfish may only be taken by shovel, jigging gear, pots, and ring net.

(ii) The operator of a commercially licensed and registered shrimp fishing vessel must obtain a subsistence fishing permit from the ADF&G prior to subsistence shrimp fishing during a closed commercial shrimp fishing season or within a closed commercial shrimp fishing district, section, or subsection; the permit must specify the area and the date the vessel operator intends to fish; no more than 500 pounds (227 kg) of shrimp may be in possession aboard the vessel.

(iii) In waters south of 60° North latitude, the daily harvest and possession limit is 12 male Dungeness crabs per person.

(iv) In the subsistence taking of king crab:

(A) In waters south of 60° North latitude, the daily harvest and possession limit is six male crabs per person.

(B) All crab pots used for subsistence fishing and left in saltwater unattended longer than a 2-week period must have all bait and bait containers removed and all doors secured fully open.

(C) In waters south of 60° North latitude, you may take crab only from June 1 through January 31.

(D) In the Norton Sound Section of the Northern District, you must have a subsistence permit.

(v) In waters south of 60° North latitude, the daily harvest and possession limit is 12 male Tanner crabs.

Dated: February 15, 2011.

Peter J. Probasco,

Acting Chair, Federal Subsistence Board.

Dated: February 11, 2011.

Steve Kessler,

Subsistence Program Leader, USDA—Forest Service.

[FR Doc. 2011–5174 Filed 3–7–11; 8:45 am]

BILLING CODE 3410–11–P; 4310–55–P

ENVIRONMENTAL PROTECTION AGENCY

40 CFR Parts 52 and 81

[EPA–R04–OAR–2010–0666–201052; FRL–9277–1]

Approval and Promulgation of Implementation Plans and Designation of Areas for Air Quality Planning Purposes; Tennessee; Redesignation of the Knoxville 1997 8-Hour Ozone Nonattainment Area to Attainment for the 1997 8-Hour Ozone Standards

AGENCY: Environmental Protection Agency (EPA).

ACTION: Final rule.

SUMMARY: EPA is taking final action to approve a request submitted on July 14, 2010, and amended on September 9, 2010, from the State of Tennessee, through the Tennessee Department of Environment and Conservation (TDEC), Air Pollution Control Division, to redesignate the Knoxville, Tennessee 8-hour ozone nonattainment area to attainment for the 1997 8-hour ozone national ambient air quality standards (NAAQS). The Knoxville, Tennessee 1997 8-hour ozone nonattainment area comprises Anderson, Blount, Jefferson, Knox, Loudon, and Sevier Counties in their entireties, and the portion of Cocke County that falls within the boundary of the Great Smoky Mountains National Park (hereinafter referred to as the "Knoxville Area" or "Area"). EPA's approval of the redesignation request is based on the determination that the State of Tennessee has met the criteria for redesignation to attainment set forth in the Clean Air Act (CAA or Act), including the determination that the Knoxville Area has attained the 1997 8-hour ozone NAAQS. Additionally, EPA is approving a revision to the Tennessee State Implementation Plan (SIP) to include the 1997 8-hour ozone maintenance plan for the Knoxville Area that contains the new 2024 motor vehicle emission budgets (MVEBs) for nitrogen oxides (NO_X) and volatile organic compounds (VOC). This action also approves the emissions inventory submitted with the maintenance plan. As part of this final action, EPA considered the adverse comments received; a response to comments is included in this final action.

DATES: *Effective Date:* This rule will be effective March 8, 2011.

ADDRESSES: EPA has established a docket for this action under Docket Identification No. EPA–R04–OAR–2010–0666. All documents in the docket are listed on the *http://www.regulations.gov* Web site. Although

listed in the index, some information is not publicly available, *i.e.,* Confidential Business Information or other information whose disclosure is restricted by statute. Certain other material, such as copyrighted material, is not placed on the Internet and will be publicly available only in hard copy form. Publicly available docket materials are available either electronically through *http://www.regulations.gov* or in hard copy at the Regulatory Development Section, Air Planning Branch, Air, Pesticides and Toxics Management Division, U.S. Environmental Protection Agency, Region 4, 61 Forsyth Street, SW., Atlanta, Georgia 30303–8960. EPA requests that if at all possible, you contact the person listed in the **FOR FURTHER INFORMATION CONTACT** section to schedule your inspection. The Regional Office's official hours of business are Monday through Friday, 8:30 to 4:30, excluding Federal holidays.

FOR FURTHER INFORMATION CONTACT: Jane Spann or Royce Dansby-Sparks, Regulatory Development Section, Air Planning Branch, Air, Pesticides and Toxics Management Division, U.S. Environmental Protection Agency, Region 4, 61 Forsyth Street, SW., Atlanta, Georgia 30303–8960. Jane Spann may be reached by phone at (404) 562–9029 or via electronic mail at *spann.jane@epa.gov.* Royce Dansby-Sparks may be reached by phone at (404) 562–9187 or via electronic mail at *dansby-sparks.royce@epa.gov.*

SUPPLEMENTARY INFORMATION:

Table of Contents

I. What is the background for the actions?
II. What are the actions EPA is taking?
III. Why is EPA taking these actions?
IV. Response to Comments
V. What are the effects of these actions?
VI. Final Action
VII. Statutory and Executive Order Reviews

I. What is the background for the actions?

On July 14, 2010, the State of Tennessee, through TDEC, submitted a request to redesignate the Knoxville Area to attainment for the 1997 8-hour ozone NAAQS, and for EPA approval of the Tennessee SIP revision containing a maintenance plan for the Area. In an action published on October 7, 2010 (75 FR 62026), EPA proposed approval of Tennessee's plan for maintaining the 1997 8-hour ozone NAAQS, including the emissions inventory submitted pursuant to CAA section 172(c)(3); and the NO_x and VOC MVEBs for the Knoxville Area contained in the maintenance plan. At that time, EPA also proposed to approve the redesignation of the Knoxville Area to attainment. Additional background for today's action is set forth in EPA's October 7, 2010, proposal.

The MVEBs included in the maintenance plan are as follows:

TABLE 1—KNOXVILLE AREA VOC AND NO_X MVEBS

[Summer season tons per day (tpd)]

	2024
NO_X	36.32
VOC	25.19

In its October 7, 2010 proposed action, EPA noted that the adequacy public comment period on these MVEBs (as contained in Tennessee's submittal) began on June 15, 2010, and closed on July 15, 2010. No comments were received during the public comment period. Thus, EPA deemed the new MVEBs for the Knoxville Area adequate for the purposes of transportation conformity on September 15, 2010 (75 FR 55977).

As stated in the October 7, 2010, proposal, this redesignation addresses the Knoxville Area's status solely with respect to the 1997 8-hour ozone NAAQS, for which designations were finalized on April 30, 2004 (69 FR 23857).

In this final rulemaking, EPA is also noting minor corrections that the State of Tennessee made on September 2, 2010, and September 9, 2010, to amend its July 14, 2010, submittal. The changes reflect minor corrections to total values in several data tables for data consistency throughout the submittal. In addition, area source emissions inventory information for Knox County that was inadvertently omitted in the original submittal was added to Appendix A. The corrected submittal can be found in the docket EPA–R04–OAR–2010–0666 on the *http://www.regulations.gov* Web site. EPA's proposed action, published on October 7, 2010 (75 FR 62026), and today's final action, are not affected by these minor corrections. EPA is also noting a typographical error in the October 7, 2010, proposed rule. The last entry in Table 8 on page 62039 of the proposed rule should read "Non-road mobile source total (MLA)" instead of "Non-road mobile source total," to distinguish the 2007 commercial marine vessels, locomotives and aircraft emissions from other non-road emission sources. *See* 75 FR 62039. EPA does not believe this minor typographical error affected the ability of the public to comment on this action because the actual inventory numbers were accurate and the public was provided with sufficient information to comment on the proposed actions.

EPA reviewed ozone monitoring data from ambient ozone monitoring stations in the Knoxville Area for the ozone seasons from 2007–2009. These data have been quality-assured and are recorded in Air Quality System (AQS). The fourth-highest 8-hour ozone average for 2007, 2008, and 2009, and the 3-year average of these values (*i.e.,* design values), are summarized in Table 2 of this final rulemaking. Preliminary monitoring data for the 2010 ozone season indicate that the Area is not violating the 1997 ozone NAAQS based on data from 2008–2010. These preliminary data are available in the Docket for today's action although it is not yet certified.

TABLE 2—DESIGN VALUE CONCENTRATIONS FOR THE KNOXVILLE 8-HOUR OZONE AREA

[Parts per million, ppm]

County	Site name	Monitor ID	Eight-hour design values (ppm)			
			2005–2007	2006–2008	2007–2009	2008–2010 **
Anderson	Freels Bend Study Area	470010101–1	0.080	0.077	0.072	0.070
Blount	Look Rock, GSMNP	470090101–1	0.086	0.085	0.079	0.077
	Cades Cove, GSMNP	470090102–1	0.070	0.072	0.069	0.069
Jefferson	1188 Lost Creek Road	470890002–1	0.084	0.081	0.076	0.074
Knox	9315 Rutledge Pike	470930021–1	0.081	0.081	0.077	0.071
	4625 Mildred Drive	470931020–1	0.088	0.088	0.082	0.076
Loudon	1703 Roberts Road	47105109–1	0.085	0.082	0.077	0.073

TABLE 2—DESIGN VALUE CONCENTRATIONS FOR THE KNOXVILLE 8-HOUR OZONE AREA—Continued

[Parts per million, ppm]

County	Site name	Monitor ID	Eight-hour design values (ppm)			
			2005–2007	2006–2008	2007–2009	2008–2010 **
Sevier	Cove Mountain, GSMNP	47155101–1	0.082	0.082	0.079	0.076

** Based on preliminary data as of November 7, 2010 (this data comprises the 2010 ozone season). The actual design value cannot be calculated until the data is quality assured and formally submitted to EPA sometime in mid-2011.

II. What are the actions EPA is taking?

In today's rulemaking, EPA is approving: (1) Tennessee's emissions inventory which was submitted pursuant to CAA section 172(c)(3); (2) Tennessee's 1997 8-hour ozone maintenance plan for the Knoxville Area, including MVEB's (such approval being one of the CAA criteria for redesignation to attainment status); and, (3) Tennessee's redesignation request to change the legal designation of the Knoxville Area from nonattainment to attainment for the 1997 8-hour ozone NAAQS. The maintenance plan is designed to demonstrate that the Knoxville Area will continue to attain the 1997 8-hour ozone NAAQS through 2024. EPA's approval of the redesignation request is based on EPA's determination that the Knoxville Area meets the criteria for redesignation set forth in CAA, sections 107(d)(3)(E) and 175A, including EPA's determination that the Knoxville Area has attained the 1997 8-hour ozone NAAQS. EPA's analyses of Tennessee's redesignation request, emissions inventory, and maintenance plan are described in detail in the October 7, 2010, proposed rule (75 FR 62026).

Consistent with the CAA, the maintenance plan that EPA is approving also includes 2024 MVEBs for NO_X and VOC for the Knoxville Area. In this action, EPA is approving these NO_X and VOC MVEBs for the purposes of transportation conformity. For regional emission analysis years that involve the year 2024 and beyond, the applicable budgets (for the purpose of conducting transportation conformity analyses) are the new 2024 MVEBs.

III. Why is EPA taking these actions?

EPA has determined that the Knoxville Area has attained the 1997 8-hour ozone NAAQS and has also determined that all other criteria for the redesignation of the Knoxville Area from nonattainment to attainment of the 1997 8-hour ozone NAAQS have been met. *See* CAA section 107(d)(3)(E). One of those requirements is that the Knoxville Area have an approved plan demonstrating maintenance of the 1997 8-hour ozone NAAQS. EPA is also taking final action to approve the maintenance plan for the Knoxville Area as meeting the requirements of sections 175A and 107(d)(3)(E) of the CAA. In addition, EPA is approving the emissions inventory as meeting the requirements of section 172(c)(3) of the CAA. Finally, EPA is approving the new NO_X and VOC MVEBs for 2024 as contained in Tennessee's maintenance plan for the Knoxville Area because these MVEBs are consistent with maintenance of the 1997 ozone standard in the Knoxville Area. The detailed rationale for EPA's findings and actions are set forth in the proposed rulemaking and in other discussion in this final rulemaking. EPA received multiple comments from one commenter (hereafter referred to as the "Commenter") which were generally adverse. The comments are summarized and responded to below.

IV. Response to Comments

EPA received one set of comments on the October 7, 2010, proposed approval to redesignate the Knoxville Area to attainment for the 1997 8-hour ozone NAAQS.[1] The comments focused on provisions in the Tennessee SIP regarding start-up, shutdown and malfunction emissions (sometimes referred to as SSM or excess emissions) that were not changed as part of the redesignation request and maintenance plan SIP submittal. The comments focused on provisions that the Commenter believes are "inextricably linked" to the redesignation, and as a result, the Commenter concludes that these provisions "have the potential to undermine the Knoxville Area's maintenance of the 1997 NAAQS for ozone."

The provisions of the Official Compilation Rules & Regulations of the State of Tennessee (Tenn. Comp. R. & Regs.) identified by the Commenter, and a summary of the comments, are as follows. Some of the comments address the same State or Local provisions, but each comment is summarized individually.

First, the Commenter identified Tenn. Comp. R. & Regs. Rule 1200–3–20–.07(1) and (3). The Commenter believes that these provisions should be changed "to clarify that all excess emissions are violations regardless of cause" and notwithstanding any discretionary decision made by Tennessee regarding whether the violation is "excused." The Commenter believes the "excuse" language included in the above-cited provisions is "sufficiently ambiguous that it should be revised." The Commenter also raised concerns with the discretion afforded to the Technical Secretary to determine whether excess emissions are "violations" and that such a determination might negatively affect EPA or a citizen in pursuing enforcement of such excess emissions as violations.

Second, the Commenter again identified Tenn. Comp. R. & Regs. Rule 1200–3–20–.07, further elaborating on the discretionary determination that the Technical Secretary could make regarding excess emissions and whether such emissions are violations. The Commenter stated that "the SIP contains no regulatory standard whatsoever that defines how the Technical Secretary's discretion should be exercised." The Commenter identifies five criteria enumerated in a February 15, 1983, Memorandum from Kathleen M. Bennett, Assistant Administrator for Air, Noise and Radiation (EPA) to Regional Administrators, Regions I–X, regarding *Policy on Excess Emissions During Startup, Shutdown, Maintenance, and Malfunctions* (1983 Bennett Memorandum). The Commenter explains that Tennessee's rules do not address criteria four and five identified by EPA in the 1983 Bennett Memorandum. The discussion in the comments suggests that all five criteria may be met by the Tennessee rules; however, this hinges on Tennessee's interpretation and implementation of its rules. Thus, the Commenter appears concerned that if the rules were interpreted or implemented in a certain

[1] A full set of the comments is provided in the docket for this rulemaking.

way, the rules may not be consistent with the 1993 Bennett Memorandum.

Third, the Commenter identified Tenn. Comp. R. & Regs. Rules 1200–3–5–.02(1) and 1200–3–20–.07(1) regarding visible emissions and raised concerns that these rules "create an exception for visible emissions levels." The Commenter explained that when these provisions are "incorporated into a permit, this rule operates as a blanket exemption for opacity violations." The comment also raises a concern about discretion on the part of the Technical Secretary to exempt a facility's excess emissions and states that these provisions are "automatic exemptions" that the Commenter does not agree are consistent with EPA's interpretation of the CAA. The Commenter explained that Tenn. Comp. R. & Regs. Rule 1200–3–5–.07(1) must be amended so that excess visible emissions due to startup and shutdown are subject to enforcement and that Rule 1200–3–5–.02(1) should be eliminated entirely because the exceptions provided in that rule are "entirely inconsistent" with EPA's interpretation of the CAA.

Fourth, the Commenter identified Tenn. Comp. R. & Regs. Rule 1200–3–20–.06 as ambiguous about whether scheduled shutdown of air pollution control equipment is an excuse for excess emissions. The Commenter recommended that this provision be amended to clarify that scheduled maintenance is not an excuse for excess emissions unless the owner or operator can prove that better scheduling for maintenance and better operation and maintenance practices could not have prevented the violation. The Commenter cited to the 1983 Bennett Memorandum for support for this comment.

Fifth, the Commenter identified Tenn. Comp. R. & Regs. Rule 1200–3–20–.03 as a concern because it provides exceptions to the notification provisions regarding excess emissions. The Commenter explained that all owners/operators should be required to give notice for all excess emissions and Rule 1200–3–20–.03 should be amended to require such notice.

Sixth, the Commenter identified provisions in the Knox County Air Pollution Control Regulations (Knox Co Regulations) that raise concerns. The identified provisions are Knox Co Regulations 32.1(C) and 34.1(A) and (C). With regard to 32.1(C), the Commenter explained that this regulation should clarify the effect of an administrative determination on the capacity of citizens to bring a citizen suit on the same issue. With regard to 34.1(A) and (C), the Commenter explained that this regulation should state that advance notice and reports of excess emissions do not excuse such emissions.

Seventh, the Commenter submitted two comments on what was described as rule changes made by Tennessee that had been submitted to EPA as SIP revisions. The main focus of the comments appears to be that, "the inclusion of overly-broad SSM provisions in the SIP undermines the integrity of the State's emissions forecast and can threaten NAAQS compliance." As a result, the Commenter suggests that EPA should condition any redesignation of the Knoxville Area on Tennessee's modification of its regulations as outlined in the comment letter.

EPA's Response. As a point of clarification, the issue before EPA in the current rulemaking action is a redesignation for Knoxville to attainment for the 8-hour ozone standard—including the maintenance plan. The SIP provisions identified above and in Commenter's letter are not currently being proposed for revision as part of the redesignation submittal. Thus, EPA's review here is limited to whether the already approved provisions affect any the requirements for redesignation in a manner that would preclude EPA from approving the redesignation request. Because the rules cited by the Commenter are not pending before EPA and/or are not the subject of this rulemaking action, EPA did not undertake a full SIP review of the individual provisions. It has long been established that EPA may rely on prior SIP approvals in approving a redesignation request (*See* page 3 of the September 4, 1992, John Calcagni memorandum; *Southwestern Pennsylvania Growth Alliance* v. *Browner,* 144 F.3d 984, 989–990 (6th Cir. 1998); *Wall* v. *EPA,* 265 F.3d 426 (6th Cir. 2001)) plus any additional measures it may approve in conjunction with a redesignation action. *See* 68 FR 25413, 25426 (May 12, 2003).

There are two main rules identified by the Commenter. Tenn. Comp. R. & Regs. Rule 1200–3–20 is a rule entitled, "Limits on Emissions Due to Malfunctions, Start-Ups and Shutdowns." The other rule, Tenn. Comp. R. & Regs. Rule 1200–3–5 is part of Tennessee's visible emissions rules. Rule 1200–3–20 was first approved into the SIP in 1980 with a revision in 1982. Rule 1200–3–5 was first approved into the SIP in 1972 and has undergone numerous revisions, with the most recent occurring in 1997. As noted above, the Commenter has also identified Knox Co. Regulations 32.1(C) and 34.1(A) and (C). These rules were initially incorporated into the SIP in 1972 and subsequently revised in the late 1980s. In the context of today's rulemaking, the Commenter appears to suggest that the cited State and County rules may impact maintenance of the 1997 8-hour ozone NAAQS due to flaws in the emissions forecasts because of possible future actions by Tennessee to excuse excess emissions as violations.

Following EPA's receipt of the comments, EPA contacted Tennessee and Knox County, requesting their interpretations of their respective rules per the issues identified by the Commenter. On November 18, 2010, Tennessee responded to EPA explaining that:

> Tennessee considers all excess emissions events, including events for which the Technical Secretary elects not to pursue enforcement action, to be violations of the Tennessee Air Pollution Control Regulations and the Tennessee Air Quality Act. No provision in Chapter 20 prohibits the Technical Secretary from taking enforcement action for excess emissions (including excess emissions resulting from startup, shutdown, and malfunction events), and paragraph 1200–3–20–.09 of the SIP specifically states that no provision in Chapter 20 shall limit the authority of the Technical Secretary to enforce the SIP or the obligation of an air contaminant source to attain and maintain the NAAQS. Tennessee notes that EPA's enforcement authorities are established pursuant to CAA [section] 113, and a decision by the Technical Secretary to excuse a violation does not limit EPA's authority to take enforcement action for violations of the Act. Similarly, the authority of citizens to enforce the requirements of the Act pursuant to CAA [section] 304 is not limited by the Technical Secretary's decision.

Letter from Barry Stephens, Director, Division of Air Pollution Control to Gwen Keyes Fleming, Regional Administrator, November 18, 2010. This letter affirms that Tennessee does not provide for any "blanket exemptions" for emissions. Further, Tennessee does not construe its rules to limit either EPA or citizen enforcement regardless of a decision by the State pursuant to its own enforcement discretion.

With regard to Knox County, a letter was provided from Lynne A. Liddington, Director of Air Quality Management to Gwen Keyes Fleming, Regional Administrator, on November 22, 2010. In that letter, Knox County first clarified the rules that are currently in effect in Knox County. The rules currently in effect in Knox County are not the SIP-approved rules, which are the rules that are Federally enforceable; the Commenter focused on the SIP-approved rules (which are the Federally-enforceable rules). Knox County's response is still relevant here because Knox County addresses two key

concerns of the Commenter—excuse of violations by the County and citizen rights to pursue such violations. Knox County cited to Regulation 34.8, which states, "Nothing in this section shall be construed to allow the air contaminant source to violate the ambient air quality standards nor limit the authority of the Director and/or board to institute actions under other sections of these regulations." The letter further underscored that EPA and citizen enforcement of the CAA is guaranteed by the CAA itself. Specifically, Knox County stated, "EPA is granted oversight and enforcement abilities through the Clean Air Act (CAA) Section 113 and no decision by the [Knox County Air Quality Management] Director limits EPA's authority to take enforcement action for violations of the CAA. The authority of citizens to bring enforcement suits is guaranteed by CAA Section 304."

The letters from the State and County confirm EPA's interpretation of the SIP, *i.e.,* that a determination of a State or County official regarding whether to pursue a violation of a SIP requirement, does not excuse that violation as a "violation," and would not affect EPA's or a citizen's right to enforce such a violation.[2] EPA further notes, despite the fact that these rules have been approved into the SIP for many years, that the Commenter cites to no cases in which a court has interpreted these rules as a bar to EPA or citizen enforcement. For these reasons, EPA disagrees with the Commenter that these provisions may impact the enforceability of the emission reductions relied on in the maintenance plan.

Nonetheless, in response to concerns expressed by the Commenter that SSM emissions might affect the ability of the Area to maintain the NAAQS, EPA evaluated the application of these provisions to the largest relevant source in the Area—Tennessee Valley Authority's Bull Run facility—which is the source of approximately 76 percent of the NO_X emissions in the inventory. EPA's evaluation found that the facility includes SSM emissions as part of the emission information reported to EPA under the CAA title IV requirements (the Acid Rain program), and the associated obligations for monitoring. EPA reviewed some of the reported SSM events for that facility for 2007 (through the Clean Air Markets Division (CAMD) Web site), and concluded that the emission inventory submitted to EPA by Tennessee appears consistent with the CAMD data (*i.e.,* it appears that the emission inventory accounts for start SSM events at the Bull Run facility).[3] As a result, it appears that at least with regard to the largest NO_X source in the Knoxville Area, the emissions inventory includes SSM events such that the projections for future maintenance incorporate consideration of historic SSM. With this background, below are more specific responses to Commenter's concerns.

1. Tenn. Comp. R. & Regs. Rule 1200–3–20–.07(1) and (3)

Contrary to the Commenter's assertion, there is nothing in the plain text of the above-cited rules that provides any sort of blanket exemption. Rule 1200–3–20–.07(1) simply explains what reporting is required upon excess emissions events, and Rule 1200–3–20–.07(3) appears to limit the evidentiary effect of the excess emissions report for a company in defense of enforcement. Together, the plain text of the rules and the above-quoted explanation by Tennessee make clear that there is no blanket exemption for excess emissions included in Rule 1200–3–20–.07(1) and (3). Thus, EPA does not see a basis for Commenter's claim that these rules compromise the emissions levels relied on to demonstrate maintenance of the 1997 8-hour ozone NAAQS.

2. Tenn. Comp. R. & Regs. Rule 1200–3–20–.07(1) (Enforcement Discretion Issue)

The Commenter's focus here is on Rule 1200–3–20–.07(1) and specifically, the last phrase of the sentence that reads, "[t]he owner or operator of the violating source shall submit within twenty (20) days after receipt of the notice of violation the following data *to assist the Technical Secretary in deciding whether to excuse or proceed upon the violation*." (Emphasis added.) While EPA agrees that this language could be more clearly phrased, as explained above, the State interprets this language not to excuse excess emissions as violations, but rather to establish its use of enforcement discretion in pursuing the violation in terms of an enforcement action. Specifically, the November 18, 2010, letter provided by Tennessee makes clear that Tennessee considers all excess emissions to be violations, but highlights that the State has enforcement discretion. In terms of the discretion and the consideration of the five elements cited by the Commenter (from the 1983 Bennett Memorandum), the items requested by Tennessee in Rule 1200–2–20–.07(2) do touch on the elements identified by EPA in the 1983 Bennett Memorandum.[4] While the Tennessee rule does not include the precise language from EPA's Guidance Memoranda, information consistent with the criteria EPA identified in the 1983 Bennett Memorandum are available to the State because such information must be submitted by sources as part of the excess emissions reports required by Tennessee's rule. In the absence of information indicating that Tennessee has inappropriately excused excess emissions as violations, and/or sources utilizing affirmative defenses to enforcement actions that are inconsistent with EPA's Guidance, EPA does not agree that today's rulemaking and the maintenance emissions analysis is undermined by the above-cited language in the Tennessee SIP. While EPA believes that the Tennessee rules could be more clearly drafted, there is no information demonstrating that Tennessee interprets its rules in a way that is inconsistent with the CAA and thus EPA does not believe that the rules would undermine the maintenance demonstration submitted by the State.

3. Tenn. Comp. R. & Regs. Rule 1200–3–5–.02(1) and 1200–3–20–.07(1)

The Commenter's expressed concern focuses on the language in Rule 1200–3–5–.02(1) that states, "due allowance may be made for visible emissions in excess of that permitted in this chapter which are necessary or unavoidable due to routine startup and shutdown conditions." As an initial matter, EPA notes that the "due allowance" language of Rule 1200–3–5–.02(1) cited above is preceded by the phrase, "Consistent with the requirements of Chapter 1200–3–20." As discussed above, Tennessee's November 18, 2010, letter to EPA affirms that the State considers all excess emissions events to be violations and that no provision in Chapter 20 prohibits the Technical Secretary from taking enforcement action for excess emissions, including excess emissions resulting from SSM events. The

[2] Although EPA interprets the SIP in the same manner as indicated by the State and the County, EPA recognizes that the cited language is not as clear as would be ideal. EPA would encourage the State and County to clarify the language in any future revisions to these provisions of the SIP.

[3] EPA's analysis in this action is specific to the rulemaking at issue—the redesignation request for the Knoxville Area and the approval of the maintenance plan and other elements outlined in this final action.

[4] The Commenter appears focused on the 1983 Bennett Memorandum in the comments. Notably, this Memorandum should not be confused with other Memoranda issued by EPA, such as the September 20, 1999, Memorandum entitled, "State Implementation Plans (SIPs): Policy Regarding Excess Emissions During Malfunctions, Startup, and Shutdown," which focuses on related issues but also on a source's affirmative defense in response to an enforcement action.

Commenter states that "due allowance" is not defined, and therefore appears to believe that this provision results in an automatic exemption from compliance with underlying emission limits. While EPA agrees that the meaning of the language in Rule 1200–3–5–.02(1) is not clear based solely on the plain text, the Commenter has pointed to no evidence that the State has in fact interpreted this language to excuse sources from complying with emission limits during periods of startup and shutdown and EPA is not aware that the State has done so.

EPA notes that visible emissions are generally associated with particulate mass emissions, not ozone. In that context, however, the Commenter explains that nitrogen dioxide (NO_2), one of the components of visible emissions, is also a precursor for ground-level ozone. As noted above, the Commenter has not provided any evidence that the State has interpreted this provision in a manner that would undermine the 1997 ozone NAAQS maintenance plan and EPA does not have information indicating that Tennessee has acted to "excuse" such emissions under this provision. Furthermore, even if Tennessee were to interpret the provision in such a manner, there is no evidence that it might have a sufficient impact on emissions of NO_2 (or any other pollutant) that could impact ozone maintenance in the Knoxville Area.[5] Therefore, EPA has no reason to conclude that this provision will have an adverse effect on future maintenance.

4. Tenn. Comp. R. & Regs. Rule 1200–3–20–.06

Rule 1200–3–20–.06 requires advance notice of scheduled maintenance to the Technical Secretary. The Commenter appears to suggest that the above-referenced rule is vague because it is not clear whether giving advanced notice of maintenance is an excuse for excess emissions. EPA disagrees. This rule is simply a notification requirement and in the absence of regulatory language providing that such notification would exempt a source from compliance, EPA sees no support for the Commenter's concern. EPA supports the notification requirements—and notes that the more notifications that are required by the rules, the more transparency there is with regard to excess emissions. These types of notifications may support citizen and other enforcement of the SIP under the Act because without the notifications, citizens and others may not always have knowledge about the excess emissions. Therefore, EPA rejects the Commenter's contention, and concludes that this provision will have no adverse impact on continued maintenance after the Area is redesignated.

5. Tenn. Comp. R. & Regs. Rule 1200–3–20–.03

The Commenter asserts that this rule includes exceptions for required notifications for excess emissions and that it should be revised to eliminate the exceptions and require reporting for all excess emissions. The rule begins by stating that, "[w]hen any emission source, air pollution control equipment, or related facility breaks down in such a manner as to cause the emission of air contaminants in excess of the applicable emissions standards contained in these regulations, or of sufficient duration to cause damage to property or public health, the person responsible for such equipment shall promptly notify the Technical Secretary of such failure or breakdown and provide a statement giving all pertinent facts, including the estimated duration of the breakdown." The rule also includes some limited exceptions to the notice provision, such as, "[v]iolations of the visible emission standard which occur for less than 20 minutes in one day [* * *] need not be reported." Further exceptions are also identified for certain emissions in attainment or unclassifiable areas. While the rule does provide for exceptions to certain notifications of malfunctions, EPA notes that the excuse from notification is not an excuse from compliance with the applicable emission limit. Thus, these notification exceptions do not undermine the current emissions inventories and projections. EPA notes that the rule cited above is one of general applicability and many times, individual permit conditions may require additional reporting. This is precisely the case with the largest NO_X emitter in the Area—TVA Bull Run (which must comply with the CAA title IV reporting requirements). While EPA believes it is possible that the rule could be clarified or improved; EPA does not agree that the rule undermines the maintenance plan for the 1997 8-hour ozone standard for the Knoxville Area or requires revision prior to the Area's final redesignation.

6. Knox County SIP Regulations

With respect to Knox County SIP regulations, the Commenter concedes that no provision "overtly creates excuses for excess emissions," but suggests some changes that the Commenter believes would improve the clarity of the regulations. While EPA agrees that there is language in the Knox County regulations that could be clarified, the Commenter has provided no support for the proposition that these regulations would undermine the ability of the Knoxville Area to maintain the 1997 ozone NAAQS in accordance with the submitted maintenance plan. In fact, the Commenter appears to admit such by recognizing that the rules do not excuse compliance for periods of excess emissions. EPA notes the following with regard to the specific Knox County regulations identified by the Commenter. With regard to the notification elements from Knox Co Regulation 34.1(A) and (C), EPA supports their requirement for notification of excess emissions. Knox County Rules 34.1(A) and (C) require advance notice of scheduled maintenance to the Director and notifications regarding facility breakdowns that cause violations, but they provide no exemption from standards. As set forth above, EPA believes that there is no basis for interpreting notice provisions as providing relief from compliance with emissions limitations in the absence—as is the case here—of any specific regulatory language providing such relief. Furthermore, EPA has no information indicating that Knox County has interpreted this regulation such that the notification was construed as an exemption. In fact, as was explained earlier, Knox County sent EPA a letter dated November 22, 2010, affirming that no decision by Knox County limits EPA or citizen authority to take enforcement action for violations of the CAA and that nothing in the County's rules shall be construed to allow an air contaminant source to violate the ambient air quality standards nor limit the authority of the Director and/or board to institute actions. The other Knox County rules cited by Commenter fall into the same category—the rules themselves contain no language suggesting that there is any automatic or blanket exemption for excess emission.

In terms of the Commenter's overall stated concern, the record and EPA's proposal provide further supporting information (75 FR 62026) regarding the

[5] As was noted earlier in this notice, TVA's Bull Run facility accounts for approximately 76.6 percent of the NO_X (which includes NO_2) emissions in this nonattainment area (pursuant to 2008 emissions estimates). Thus, it is the largest NO_X emitter in the Area. The NO_X emissions from Bull Run include excess emission events, consistent with Federal requirements. So in terms of NO_X, EPA does not see a basis for concern regarding the NO_X related emissions inventory data. As a result, the Commenter's point on NO_X in this context appears unsupported.

attainment and projected emission inventories. Specifically, in EPA's proposed approval of the redesignation and the associated maintenance plan, EPA explained its rationale for the approval of the maintenance plan and redesignation request based on the criteria required by the CAA, the implementing regulations, and EPA's longstanding guidance for redesignating areas from nonattainment to attainment. EPA evaluated the emissions reductions in association with the maintenance plan and fully considered whether it was reasonable to believe that these reductions are "permanent and enforceable" measures to support continued maintenance through the initial maintenance period.[6] The base year or "attainment level" emissions for the Knoxville Area as identified in the State's submission and EPA's proposed approval are 135.19 tpd for NO_X and 112.28 tpd for VOC. Also, as provided in Tables 3 and 4 in the proposed rule, through the end of the maintenance period (*i.e.,* 2024), emission reductions realized through Federal, State and local measures are projected to result in emission levels of 79.08 tpd for NO_X and 85.11 tpd for VOC. This indicates a 41.5 percent reduction in NO_X and a 24.2 percent reduction in VOC for the Knoxville Area beyond the levels that brought the Area into attainment for the 1997 8-hour ozone standards. Thus, EPA believes that its analysis of Knoxville's ability to maintain the 1997 8-hour ozone NAAQS is conservative and supported by the evidence provided.

TABLE 3—KNOXVILLE AREA NO_X EMISSIONS

[Summer season tpd]

Summary of NO_X emissions (tpd)								
Year	Point	Area	Onroad	Nonroad (excluding MLA)	Nonroad (MLA)	Total	Safety margin	Change from 2007 %
2007	42.69	2.07	71.83	13.16	5.44	135.19	.....	.....
2010	42.65	2.15	63.10	12.17	5.03	125.10	10.09	−7.5
2013	42.94	2.29	54.36	10.51	4.34	114.44	20.75	−15.3
2016	43.56	2.50	45.62	8.74	3.61	104.03	31.18	−23.0
2020	44.30	2.60	33.96	7.21	2.98	91.05	44.14	−32.7
2024	45.11	2.68	22.29	6.37	2.63	79.08	56.11	−41.5

Note: Emissions are for Anderson, Blount, Jefferson, Knox, Loudon, Sevier and onroad emissions for Cocke County. MLA = Commercial Marine Vessels, Locomotives and Aircraft.

TABLE 4—KNOXVILLE AREA VOC EMISSIONS

[Summer season in tpd]

Summary of VOC emissions (tpd)								
Year	Point	Area	Onroad	Nonroad (excluding MLA)	Nonroad (MLA)	Total	Safety margin	Change from 2007 %
2007	7.32	33.25	36.77	34.26	0.68	112.28		
2010	7.17	34.21	33.53	31.05	0.62	106.58	5.70	−5.1
2013	7.37	35.23	30.29	26.47	0.52	99.88	12.40	−11.0
2016	7.88	36.64	27.05	22.07	0.44	94.08	18.20	−16.2
2020	8.64	38.40	22.72	18.04	0.35	88.15	24.13	−21.5
2024	9.53	40.24	18.39	16.62	0.33	85.11	27.17	−24.2

Note: Emissions are for Anderson, Blount, Jefferson, Knox, Loudon, Sevier and onroad emissions for Cocke County. MLA = Commercial Marine Vessels, Locomotives and Aircraft.

On the first page of the comment letter, the Commenter states that "[w]hile emissions of [NO_X] and [VOCs] have not caused NAAQS violations during the past few years at the monitoring locations, the required 'permanent and enforceable' measures that constrain emissions in the future cannot guarantee maintenance in light of the SSM provisions in the SIP." In light of the Commenter's general reference to permanent and enforceable measures, the following provides general information regarding those measures in the SIP that support today's action.

The section of the proposed action entitled "Criteria (3)—The Air Quality Improvement in the Knoxville Area 1997 8-Hour Ozone NAAQS Nonattainment Area Is Due to Permanent and Enforceable Reductions in Emissions Resulting From Implementation of the SIP and Applicable Federal Air Pollution Control Regulations and Other Permanent and Enforceable Reductions," on pages 62034–62035 of EPA's October 7, 2010, proposed rulemaking, there is an explanation of the permanent and enforceable emission reductions that are anticipated in the Knoxville Area over the maintenance period.

For the reasons provided above, EPA does not agree that there is any reasonable basis for concluding that the provisions cited by the Commenter will affect the Area's ability to maintain the 1997 ozone NAAQS over the maintenance period, nor that they in any way undercut the maintenance plan

[6] Section 175A(a) requires that the initial maintenance plan submitted to support a redesignation demonstrate maintenance at least 10 years after EPA's approval. Section 175A(b) requires that this maintenance plan be updated 8 years after EPA approval to extend the original maintenance plan for an additional 10 year period.

that the State has submitted and EPA intends to approve. However, EPA notes that if for any reason the Area does experience a violation of the 1997 8-hour ozone NAAQS after redesignation, the contingency measures contained in the maintenance plan associated with this redesignation would require Tennessee to implement measures to correct the violation. This accords with Congress's judgment, as reflected in the CAA, that even an approved maintenance plan could not guarantee that a violation might not occur after redesignation. Congress thus required in section 175A for contingency measures to, at a minimum, help correct such violations. *See* the discussion of contingency measures in *Greenbaum* v. *EPA,* 370 F.3d 527 (6th Cir. 2004).

Moreover, as is discussed in the proposal, while a violation of the NAAQS is the ultimate trigger for implementation of contingency measures to correct the violation, other contingency measures contained in the maintenance plan for Knoxville provide for early action to prevent violation. For example, the maintenance plan includes a contingency measure to launch an investigation if emissions projections indicate that a violation of the 3-year design value may be imminent. Another set of contingency measures are triggered where emissions projections exceed expectations by greater than 10 percent under the specified metrics. Thus, in addition to providing for prompt correction of any violations that may occur, the maintenance plan/contingency measures include provisions to account for potential future changes to emissions other than what was forecast. *See* the Contingency Measures Section of EPA's October 7, 2010, proposed rulemaking at 75 FR 62037, for further information.

V. What are the effects of these actions?

Approval of the redesignation request changes the legal designation of Anderson, Blount, Jefferson, Knox, Loudon, and Sevier Counties in their entireties, and the portion of Cocke County that falls within the boundary of the Great Smoky Mountains National Park from nonattainment to attainment for the 1997 8-hour ozone NAAQS. EPA is modifying the regulatory table in 40 CFR 81.343 to reflect a designation of attainment for these full and partial counties. EPA is also approving, as a revision to the Tennessee SIP, Tennessee's plan for maintaining the 1997 8-hour ozone NAAQS in the Knoxville Area through 2024. The maintenance plan includes contingency measures to remedy possible future violations of the 1997 8-hour ozone NAAQS, and establishes NO_X and VOC MVEBs for 2024 for the Knoxville Area. Additionally, this action approves the emissions inventory for the Knoxville Area pursuant to section 172(c)(3) of the CAA.

VI. Final Action

After evaluating Tennessee's redesignation request and considering the comments on the proposed rule, EPA is taking final action to approve the redesignation and change the legal designation of Anderson, Blount, Jefferson, Knox, Loudon, and Sevier Counties in their entireties, and the portion of Cocke County that falls within the boundary of the Great Smoky Mountains National Park from nonattainment to attainment for the 1997 8-hour ozone NAAQS. Through this action, EPA is also approving into the Tennessee SIP, the 1997 8-hour ozone maintenance plan for the Knoxville Area, which includes the new NO_X MVEBs of 36.32 tpd and VOC MVEBs of 25.19 tpd for 2024. Additionally, EPA is approving the 2007 emissions inventory for the Knoxville Area pursuant to section 172(c)(3) of the CAA. In a previous action, EPA found the new Knoxville Area MVEBs adequate for the purposes of transportation conformity (75 FR 55977, September 15, 2010). Within 24 months from the effective date of EPA's adequacy finding for the MVEBs, the transportation partners are required to demonstrate conformity to the new NO_X and VOC MVEBs pursuant to 40 CFR 93.104(e).

In accordance with 5 U.S.C. 553(d), EPA finds there is good cause for this action to become effective immediately upon publication. This is because a delayed effective date is unnecessary due to the nature of a redesignation to attainment, which relieves the Area from certain CAA requirements that would otherwise apply to it. The immediate effective date for this action is authorized under both 5 U.S.C. 553(d)(1), which provides that rulemaking actions may become effective less than 30 days after publication if the rule "grants or recognizes an exemption or relieves a restriction," and section 553(d)(3), which allows an effective date less than 30 days after publication "as otherwise provided by the agency for good cause found and published with the rule." The purpose of the 30-day waiting period prescribed in section 553(d) is to give affected parties a reasonable time to adjust their behavior and prepare before the final rule takes effect. Today's rule, however, does not create any new regulatory requirements such that affected parties would need time to prepare before the rule takes effect. Rather, today's rule relieves the State of various requirements for the Knoxville Area. For these reasons, EPA finds good cause under 5 U.S. C. 553(d)(3) for this action to become effective on the date of publication of this action.

VII. Statutory and Executive Order Reviews

Under the CAA, redesignation of an area to attainment and the accompanying approval of the maintenance plan under CAA section 107(d)(3)(E) are actions that affect the status of geographical area and do not impose any additional regulatory requirements on sources beyond those required by State law. A redesignation to attainment does not in and of itself impose any new requirements, but rather results in the application of requirements contained in the CAA for areas that have been redesignated to attainment. Moreover, the Administrator is required to approve a SIP submission that complies with the provisions of the Act and applicable Federal regulations. 42 U.S.C. 7410(k); 40 CFR 52.02(a). Thus, in reviewing SIP submissions, EPA's role is to approve State choices, provided that they meet the criteria of the CAA. Accordingly, this action merely approves State law as meeting Federal requirements and does not impose additional requirements beyond those imposed by State law. For these reasons, these actions:

- Are not a "significant regulatory action" subject to review by the Office of Management and Budget under Executive Order 12866 (58 FR 51735, October 4, 1993);
- Do not impose an information collection burden under the provisions of the Paperwork Reduction Act (44 U.S.C. 3501 *et seq.*);
- Are certified as not having a significant economic impact on a substantial number of small entities under the Regulatory Flexibility Act (5 U.S.C. 601 *et seq.*);
- Do not contain any unfunded mandate or significantly or uniquely affect small governments, as described in the Unfunded Mandates Reform Act of 1995 (Pub. L. 104–4);
- Do not have Federalism implications as specified in Executive Order 13132 (64 FR 43255, August 10, 1999);
- Are not an economically significant regulatory action based on health or safety risks subject to Executive Order 13045 (62 FR 19885, April 23, 1997);
- Are not significant regulatory action subject to Executive Order 13211 (66 FR 28355, May 22, 2001);

• Are not subject to requirements of Section 12(d) of the National Technology Transfer and Advancement Act of 1995 (15 U.S.C. 272 note) because application of those requirements would be inconsistent with the CAA; and,

• Do not provide EPA with the discretionary authority to address, as appropriate, disproportionate human health or environmental effects, using practicable and legally permissible methods, under Executive Order 12898 (59 FR 7629, February 16, 1994).

In addition, this final rule does not have Tribal implications as specified by Executive Order 13175 (65 FR 67249, November 9, 2000), because the SIP is not approved to apply in Indian country located in the State, and EPA notes that it will not impose substantial direct costs on Tribal governments or preempt Tribal law.

The Congressional Review Act, 5 U.S.C. 801 *et seq.,* as added by the Small Business Regulatory Enforcement Fairness Act of 1996, generally provides that before a rule may take effect, the agency promulgating the rule must submit a rule report, which includes a copy of the rule, to each House of the Congress and to the Comptroller General of the United States. EPA will submit a report containing this action and other required information to the U.S. Senate, the U.S. House of Representatives, and the Comptroller General of the United States prior to publication of the rule in the **Federal Register**. A major rule cannot take effect until 60 days after it is published in the **Federal Register**. This action is not a "major rule" as defined by 5 U.S.C. 804(2).

Under section 307(b)(1) of the CAA, petitions for judicial review of this action must be filed in the United States Court of Appeals for the appropriate circuit by May 9, 2011. Filing a petition for reconsideration by the Administrator of this final rule does not affect the finality of this action for the purposes of judicial review nor does it extend the time within which a petition for judicial review may be filed, and shall not postpone the effectiveness of such rule or action. This action may not be challenged later in proceedings to enforce its requirements. (*See* section 307(b)(2).)

List of Subjects

40 CFR Part 52

Environmental protection, Air pollution control, Incorporation by reference, Intergovernmental relations, Ozone, Reporting and recordkeeping requirements, Oxides of nitrogen, Volatile organic compounds.

40 CFR Part 81

Environmental protection, Air pollution control, National parks.

Dated: March 1, 2011.

Gwendolyn Keyes Fleming,

Regional Administrator, Region 4.

40 CFR parts 52 and 81 are amended as follows:

PART 52—[AMENDED]

■ 1. The authority citation for part 52 continues to read as follows:

Authority: 42 U.S.C. 7401 *et seq.*

Subpart RR—Tennessee

■ 2. Section 52.2220(e) is amended by adding a new entry "8-Hour Ozone Maintenance Plan for the Knoxville, Tennessee Area" at the end of the table to read as follows:

§ 52.2220 Identification of plan.

* * * * *

(e) * * *

EPA-APPROVED TENNESSEE NON-REGULATORY PROVISIONS

Name of non-regulatory SIP provision	Applicable geographic or nonattainment area	State effective date	EPA approval date	Explanation
* *	* *	*	*	*
8-Hour Ozone Maintenance Plan for the Knoxville, Tennessee Area.	Anderson, Blount, Jefferson, Knox, Loudon, and Sevier Counties, and the portion of Cocke County that falls within the boundary of the Great Smoky Mountains National Park.	7/14/2010	3/8/2011 [Insert citation of publication].	For the 1997 8-hour ozone NAAQS.

PART 81—[AMENDED]

■ 3. The authority citation for part 81 continues to read as follows:

Authority: 42 U.S.C. 7401 *et seq.*

■ 4. In § 81.343, the table entitled "Tennessee—Ozone (8-Hour Standard)" is amended under by revising the entry for "Knoxville, TN" to read as follows:

§ 81.343 Tennessee.

* * * * *

TENNESSEE—OZONE (8-HOUR STANDARD)

Designated area	Designation [a]		Category/classification	
	Date [1]	Type	Date [1]	Type
* *	* *	* *	*	*
Knoxville, TN:				
Anderson County	This action is effective 3/8/2011	Attainment		
Blount County	This action is effective 3/8/2011	Attainment		
Cocke County (part)	This action is effective 3/8/2011	Attainment		
(Great Smoky Mtn Park)				
Jefferson County	This action is effective 3/8/2011	Attainment		
Knox County	This action is effective 3/8/2011	Attainment		
Loudon County	This action is effective 3/8/2011	Attainment		
Sevier County	This action is effective 3/8/2011	Attainment		

TENNESSEE—OZONE (8-HOUR STANDARD)—Continued

Designated area	Designation [a]		Category/classification	
	Date [1]	Type	Date [1]	Type
* *	*	* *	*	*

[a] Includes Indian Country located in each county or area, except as otherwise specified.
[1] This date is June 15, 2004, unless otherwise noted.

* * * * *

[FR Doc. 2011–5193 Filed 3–7–11; 8:45 am]
BILLING CODE 6560–50–P

DEPARTMENT OF HOMELAND SECURITY

Federal Emergency Management Agency

44 CFR Part 64

[Docket ID FEMA–2011–0002; Internal Agency Docket No. FEMA–8171]

Suspension of Community Eligibility

AGENCY: Federal Emergency Management Agency, DHS.

ACTION: Final rule.

SUMMARY: This rule identifies communities, where the sale of flood insurance has been authorized under the National Flood Insurance Program (NFIP), that are scheduled for suspension on the effective dates listed within this rule because of noncompliance with the floodplain management requirements of the program. If the Federal Emergency Management Agency (FEMA) receives documentation that the community has adopted the required floodplain management measures prior to the effective suspension date given in this rule, the suspension will not occur and a notice of this will be provided by publication in the **Federal Register** on a subsequent date.

DATES: *Effective Dates:* The effective date of each community's scheduled suspension is the third date ("Susp.") listed in the third column of the following tables.

FOR FURTHER INFORMATION CONTACT: If you want to determine whether a particular community was suspended on the suspension date or for further information, contact David Stearrett, Mitigation Directorate, Federal Emergency Management Agency, 500 C Street, SW., Washington, DC 20472, (202) 646–2953.

SUPPLEMENTARY INFORMATION: The NFIP enables property owners to purchase flood insurance which is generally not otherwise available. In return, communities agree to adopt and administer local floodplain management aimed at protecting lives and new construction from future flooding. Section 1315 of the National Flood Insurance Act of 1968, as amended, 42 U.S.C. 4022, prohibits flood insurance coverage as authorized under the NFIP, 42 U.S.C. 4001 *et seq.,* unless an appropriate public body adopts adequate floodplain management measures with effective enforcement measures. The communities listed in this document no longer meet that statutory requirement for compliance with program regulations, 44 CFR part 59. Accordingly, the communities will be suspended on the effective date in the third column. As of that date, flood insurance will no longer be available in the community. However, some of these communities may adopt and submit the required documentation of legally enforceable floodplain management measures after this rule is published but prior to the actual suspension date. These communities will not be suspended and will continue their eligibility for the sale of insurance. A notice withdrawing the suspension of the communities will be published in the **Federal Register**.

In addition, FEMA has identified the Special Flood Hazard Areas (SFHAs) in these communities by publishing a Flood Insurance Rate Map (FIRM). The date of the FIRM, if one has been published, is indicated in the fourth column of the table. No direct Federal financial assistance (except assistance pursuant to the Robert T. Stafford Disaster Relief and Emergency Assistance Act not in connection with a flood) may legally be provided for construction or acquisition of buildings in identified SFHAs for communities not participating in the NFIP and identified for more than a year, on FEMA's initial flood insurance map of the community as having flood-prone areas (section 202(a) of the Flood Disaster Protection Act of 1973, 42 U.S.C. 4106(a), as amended). This prohibition against certain types of Federal assistance becomes effective for the communities listed on the date shown in the last column. The Administrator finds that notice and public comment under 5 U.S.C. 553(b) are impracticable and unnecessary because communities listed in this final rule have been adequately notified.

Each community receives 6-month, 90-day, and 30-day notification letters addressed to the Chief Executive Officer stating that the community will be suspended unless the required floodplain management measures are met prior to the effective suspension date. Since these notifications were made, this final rule may take effect within less than 30 days.

National Environmental Policy Act. This rule is categorically excluded from the requirements of 44 CFR part 10, Environmental Considerations. No environmental impact assessment has been prepared.

Regulatory Flexibility Act. The Administrator has determined that this rule is exempt from the requirements of the Regulatory Flexibility Act because the National Flood Insurance Act of 1968, as amended, 42 U.S.C. 4022, prohibits flood insurance coverage unless an appropriate public body adopts adequate floodplain management measures with effective enforcement measures. The communities listed no longer comply with the statutory requirements, and after the effective date, flood insurance will no longer be available in the communities unless remedial action takes place.

Regulatory Classification. This final rule is not a significant regulatory action under the criteria of section 3(f) of Executive Order 12866 of September 30, 1993, Regulatory Planning and Review, 58 FR 51735.

Executive Order 13132, Federalism. This rule involves no policies that have federalism implications under Executive Order 13132.

Executive Order 12988, Civil Justice Reform. This rule meets the applicable standards of Executive Order 12988.

Paperwork Reduction Act. This rule does not involve any collection of information for purposes of the

Paperwork Reduction Act, 44 U.S.C. 3501 *et seq.*

List of Subjects in 44 CFR Part 64

Flood insurance, Floodplains.

Accordingly, 44 CFR part 64 is amended as follows:

PART 64—[AMENDED]

■ 1. The authority citation for part 64 continues to read as follows:

Authority: 42 U.S.C. 4001 *et seq.;* Reorganization Plan No. 3 of 1978, 3 CFR, 1978 Comp.; p. 329; E.O. 12127, 44 FR 19367, 3 CFR, 1979 Comp.; p. 376.

§ 64.6 [Amended]

■ 2. The tables published under the authority of § 64.6 are amended as follows:

State and location	Community No.	Effective date authorization/cancellation of sale of flood insurance in community	Current effective map date	Date certain Federal assistance no longer available in SFHAs
Region III				
Pennsylvania:				
Allegheny, Township of, Westmoreland County.	420869	July 27, 1973, Emerg; September 29, 1978, Reg; March 17, 2011, Susp.	March 17, 2011	March 17, 2011.
Arnold, City of, Westmoreland County ...	420870	May 31, 1974, Emerg; September 30, 1980, Reg; March 17, 2011, Susp.	*-do-	-do.-
Arona, Borough of, Westmoreland County.	420871	April 9, 1976, Emerg; December 1, 1986, Reg; March 17, 2011, Susp.	-do-	-do.-
Avonmore, Borough of, Westmoreland County.	420872	July 29, 1975, Emerg; January 20, 1982, Reg; March 17, 2011, Susp.	-do-	-do.-
Bell, Township of, Westmoreland County.	422185	May 28, 1982, Emerg; January 1, 1987, Reg; March 17, 2011, Susp.	-do-	-do.-
Bolivar, Borough of, Westmoreland County.	420873	August 13, 1976, Emerg; August 10, 1979, Reg; March 17, 2011, Susp.	-do-	-do.-
Cook, Township of, Westmoreland County.	422186	May 28, 1982, Emerg; April 17, 1985, Reg; March 17, 2011, Susp.	-do-	-do.-
Delmont, Borough of, Westmoreland County.	422177	February 17, 1976, Emerg; September 29, 1978, Reg; March 17, 2011, Susp.	-do-	-do.-
Derry, Borough of, Westmoreland County.	420874	May 14, 1974, Emerg; June 1, 1978, Reg; March 17, 2011, Susp.	-do-	-do.-
Derry, Township of, Westmoreland County.	421205	May 14, 1974, Emerg; June 1, 1978, Reg; March 17, 2011, Susp.	-do-	-do.-
Donegal, Township of, Westmoreland County.	422187	January 2, 1981, Emerg; October 16, 1990, Reg; March 17, 2011, Susp.	-do-	-do.-
East Huntingdon, Township of, Westmoreland County.	422188	March 3, 1977, Emerg; August 2, 1990, Reg; March 17, 2011, Susp.	-do-	-do.-
East Vandergrift, Borough of, Westmoreland County.	420875	September 10, 1975, Emerg; May 29, 1979, Reg; March 17, 2011, Susp.	-do-	-do.-
Export, Borough of, Westmoreland County.	420876	April 17, 1975, Emerg; December 15, 1981, Reg; March 17, 2011, Susp.	-do-	-do.-
Fairfield, Township of, Westmoreland County.	422189	July 5, 1984, Emerg; April 17, 1985, Reg; March 17, 2011, Susp.	-do-	-do.-
Greensburg, City of, Westmoreland County.	420877	May 24, 1973, Emerg; October 17, 1978, Reg; March 17, 2011, Susp.	-do-	-do.-
Hempfield, Township of, Westmoreland County.	420878	April 16, 1973, Emerg; September 29, 1978, Reg; March 17, 2011, Susp.	-do-	-do.-
Hunker, Borough of, Westmoreland County.	420880	November 14, 1975, Emerg; November 19, 1986, Reg; March 17, 2011, Susp.	-do-	-do.-
Hyde Park, Borough of, Westmoreland County.	422179	December 4, 1975, Emerg; June 1, 1986, Reg; March 17, 2011, Susp.	-do-	-do.-
Irwin, Borough of, Westmoreland County	420881	June 18, 1974, Emerg; February 4, 1981, Reg; March 17, 2011, Susp.	-do-	-do.-
Jeannette, City of, Westmoreland County.	420882	October 1, 1971, Emerg; April 17, 1978, Reg; March 17, 2011, Susp.	-do-	-do.-
Latrobe, Borough of, Westmoreland County.	420883	December 10, 1974, Emerg; January 16, 1980, Reg; March 17, 2011, Susp.	-do-	-do.-
Ligonier, Borough of, Westmoreland County.	422180	April 30, 1975, Emerg; October 15, 1980, Reg; March 17, 2011, Susp.	-do-	-do.-
Ligonier, Township of, Westmoreland County.	420884	September 6, 1974, Emerg; September 1, 1978, Reg; March 17, 2011, Susp.	-do-	-do.-
Lower Burrell, City of, Westmoreland County.	420885	September 9, 1974, Emerg; February 17, 1982, Reg; March 17, 2011, Susp.	-do-	-do.-
Loyalhanna, Township of, Westmoreland County.	422190	December 2, 1975, Emerg; January 20, 1982, Reg; March 17, 2011, Susp.	-do-	-do.-
Manor, Borough of, Westmoreland County.	420886	August 29, 1973, Emerg; September 1, 1977, Reg; March 17, 2011, Susp.	-do-	-do.-
Monessen, City of, Westmoreland County.	420887	December 5, 1974, Emerg; July 16, 1981, Reg; March 17, 2011, Susp.	-do-	-do.-
Mount Pleasant, Borough of, Westmoreland County.	422181	July 7, 1975, Emerg; February 1, 1987, Reg; March 17, 2011, Susp.	-do-	-do.-
Mount Pleasant, Township of, Westmoreland County.	420888	September 26, 1973, Emerg; July 18, 1977, Reg; March 17, 2011, Susp.	-do-	-do.-

State and location	Community No.	Effective date authorization/cancellation of sale of flood insurance in community	Current effective map date	Date certain Federal assistance no longer available in SFHAs
Murrysville, City of, Westmoreland County.	421207	May 23, 1974, Emerg; February 17, 1982, Reg; March 17, 2011, Susp.	-do-	-do.-
New Florence, Borough of, Westmoreland County.	420890	February 25, 1977, Emerg; June 3, 1988, Reg; March 17, 2011, Susp.	-do-	-do.-
New Kensington, City of, Westmoreland County.	420891	June 14, 1973, Emerg; September 29, 1978, Reg; March 17, 2011, Susp.	-do-	-do.-
New Stanton, Borough of, Westmoreland County.	420892	September 30, 1975, Emerg; December 15, 1981, Reg; March 17, 2011, Susp.	-do-	-do.-
North Belle Vernon, Borough of, Westmoreland County.	422182	March 7, 1978, Emerg; September 30, 1980, Reg; March 17, 2011, Susp.	-do-	-do.-
North Huntingdon, Township of, Westmoreland County.	420893	February 9, 1973, Emerg; September 29, 1978, Reg; March 17, 2011, Susp.	-do-	-do.-
North Irwin, Borough of, Westmoreland County.	422641	February 9, 1976, Emerg; November 17, 1978, Reg; March 17, 2011, Susp.	-do-	-do.-
Penn, Borough of, Westmoreland County.	420895	March 19, 1975, Emerg; February 4, 1981, Reg; March 17, 2011, Susp.	-do-	-do.-
Penn, Township of, Westmoreland County.	422183	February 7, 1975, Emerg; October 15, 1981, Reg; March 17, 2011, Susp.	-do-	-do.-
Rostraver, Township of, Westmoreland County.	422184	August 26, 1974, Emerg; September 2, 1982, Reg; March 17, 2011, Susp.	-do-	-do.-
Salem, Township of, Westmoreland County.	422192	February 29, 1980, Emerg; April 17, 1985, Reg; March 17, 2011, Susp.	-do-	-do.-
Scottdale, Borough of, Westmoreland County.	420896	January 26, 1973, Emerg; November 18, 1981, Reg; March 17, 2011, Susp.	-do-	-do.-
Seward, Borough of, Westmoreland County.	422738	N/A, Emerg; June 9, 1998, Reg; March 17, 2011, Susp.	-do-	-do.-
Sewickley, Township of, Westmoreland County.	422193	April 19, 1973, Emerg; June 1, 1978, Reg; March 17, 2011, Susp.	-do-	-do.-
Smithton, Borough of, Westmoreland County.	420899	May 4, 1976, Emerg; August 15, 1990, Reg; March 17, 2011, Susp.	-do-	-do.-
South Greensburg, Borough of, Westmoreland County.	420900	February 10, 1976, Emerg; July 3, 1986, Reg; March 17, 2011, Susp.	-do-	-do.-
South Huntingdon, Township of, Westmoreland County.	422194	February 18, 1977, Emerg; August 15, 1990, Reg; March 17, 2011, Susp.	-do-	-do.-
Southwest Greensburg, Borough of, Westmoreland County.	420901	August 29, 1975, Emerg; June 30, 1976, Reg; March 17, 2011, Susp.	-do-	-do.-
St. Clair, Township of, Westmoreland County.	422191	August 22, 1977, Emerg; September 18, 1987, Reg; March 17, 2011, Susp.	-do-	-do.-
Sutersville, Borough of, Westmoreland County.	420902	February 5, 1974, Emerg; August 1, 1977, Reg; March 17, 2011, Susp.	-do-	-do.-
Trafford, Borough of, Westmoreland County.	420903	May 30, 1975, Emerg; September 28, 1979, Reg; March 17, 2011, Susp.	-do-	-do.-
Unity, Township of, Westmoreland County.	420964	December 26, 1973, Emerg; July 17, 1978, Reg; March 17, 2011, Susp.	-do-	-do.-
Upper Burrell, Township of, Westmoreland County.	422195	August 20, 1975, Emerg; December 15, 1981, Reg; March 17, 2011, Susp.	-do-	-do.-
Vandergrift, Borough of, Westmoreland County.	420904	October 9, 1974, Emerg; September 30, 1980, Reg; March 17, 2011, Susp.	-do-	-do.-
Washington, Township of, Westmoreland County.	422196	January 3, 1977, Emerg; April 16, 1982, Reg; March 17, 2011, Susp.	-do-	-do.-
West Leechburg, Borough of, Westmoreland County.	420905	March 22, 1976, Emerg; September 28, 1979, Reg; March 17, 2011, Susp.	-do-	-do.-
West Newton, Borough of, Westmoreland County.	420906	January 12, 1973, Emerg; July 18, 1977, Reg; March 17, 2011, Susp.	-do-	-do.-
Youngwood, Borough of, Westmoreland County.	420908	March 24, 1975, Emerg; December 15, 1981, Reg; March 17, 2011, Susp.	-do-	-do.-
Region IV				
Kentucky:				
Franklin, City of, Simpson County	210210	November 7, 1974, Emerg; September 27, 1985, Reg; March 17, 2011, Susp.	-do-	-do.-
Simpson County, Unincorporated Areas	210316	July 31, 1975, Emerg; May 1, 1987, Reg; March 17, 2011, Susp.	-do-	-do.-
Region V				
Indiana:				
Evansville, City of, Vanderburgh County	180257	June 25, 1971, Emerg; October 15, 1981, Reg; March 17, 2011, Susp.	-do-	-do.-
Vanderburgh County, Unincorporated Areas.	180256	June 25, 1971, Emerg; February 1, 1980, Reg; March 17, 2011, Susp.	-do-	-do.-

State and location	Community No.	Effective date authorization/cancellation of sale of flood insurance in community	Current effective map date	Date certain Federal assistance no longer available in SFHAs
Ohio:				
Beavercreek, City of, Greene County	390876	August 27, 1980, Emerg; August 2, 1982, Reg; March 17, 2011, Susp.	-do-	-do.-
Bellbrook, City of, Greene County	390194	July 28, 1972, Emerg; June 1, 1977, Reg; March 17, 2011, Susp.	-do-	-do.-
Centerville, City of, Greene and Montgomery Counties.	390408	May 19, 1975, Emerg; November 18, 1981, Reg; March 17, 2011, Susp.	-do-	-do.-
Fairborn, City of, Greene County	390195	June 19, 1975, Emerg; November 19, 1980, Reg; March 17, 2011, Susp.	-do-	-do.-
Greene County, Unincorporated Areas ..	390193	July 3, 1974, Emerg; April 1, 1981, Reg; March 17, 2011, Susp.	-do-	-do.-
Huber Heights, City of, Greene, Miami, and Montgomery Counties.	390884	December 11, 1984, Emerg; December 11, 1984, Reg; March 17, 2011, Susp.	-do-	-do.-
Jamestown, Village of, Greene County ..	390881	April 22, 1983, Emerg; February 1, 1984, Reg; March 17, 2011, Susp.	-do-	-do.-
Kettering, City of, Greene and Montgomery Counties.	390412	December 12, 1973, Emerg; October 15, 1980, Reg; March 17, 2011, Susp.	-do-	-do.-
Spring Valley, Village of, Greene County	390196	April 9, 1975, Emerg; August 1, 1980, Reg; March 17, 2011, Susp.	-do-	-do.-
Xenia, City of, Greene County	390197	May 12, 1975, Emerg; January 2, 1981, Reg; March 17, 2011, Susp.	-do-	-do.-
Yellow Springs, Village of, Greene County.	390640	July 31, 1975, Emerg; September 4, 1985, Reg; March 17, 2011, Susp.	-do-	-do.-
Region VI				
Arkansas:				
Beaver, Town of, Carroll County	050595	September 7, 1989, Emerg; March 17, 2011, Reg; March 17, 2011, Susp.	-do-	-do.-
Eureka Springs, City of, Carroll County	050322	April 2, 1975, Emerg; July 16, 1980, Reg; March 17, 2011, Susp.	-do-	-do.-
Louisiana:				
Allen Parish, Unincorporated Areas	220009	September 4, 1978, Emerg; January 3, 1990, Reg; March 17, 2011, Susp.	-do-	-do.-
Elizabeth, Town of, Allen Parish	220324	March 19, 1985, Emerg; February 1, 1987, Reg; March 17, 2011, Susp.	-do-	-do.-
Kinder, Town of, Allen Parish	220010	September 8, 1975, Emerg; November 1, 1985, Reg; March 17, 2011, Susp.	-do-	-do.-
Oakdale, City of, Allen Parish	220011	May 1, 1975, Emerg; August 5, 1985, Reg; March 17, 2011, Susp.	-do-	-do.-
Oberlin, Town of, Allen Parish	220012	September 28, 1979, Emerg; October 12, 1982, Reg; March 17, 2011, Susp.	-do-	-do.-
Reeves, Village of, Allen Parish	220307	June 24, 2008, Emerg; March 17, 2011, Reg; March 17, 2011, Susp.	-do-	-do.-
Texas:				
Como, Town of, Hopkins County	480870	October 4, 2002, Emerg; March 17, 2011, Reg; March 17, 2011, Susp.	-do-	-do.-
Hopkins County, Unincorporated Areas	480869	March 6, 2001, Emerg; August 1, 2008, Reg; March 17, 2011, Susp.	-do-	-do.-
Sulphur Springs, City of, Hopkins County.	480358	November 26, 1974, Emerg; December 15, 1989, Reg; March 17, 2011, Susp.	-do-	-do.-
Tira, City of, Hopkins County	480531	November 24, 2009, Emerg; March 17, 2011, Reg; March 17, 2011, Susp.	-do-	-do.-
Region VII				
Kansas:				
Hillsboro, City of, Marion County	200505	January 17, 1977, Emerg; July 20, 1984, Reg; March 17, 2011, Susp.	-do-	-do.-
Marion County, Unincorporated Areas ...	200593	December 29, 1992, Emerg; March 1, 2005, Reg; March 17, 2011, Susp.	-do-	-do.-
Peabody, City of, Marion County	200208	September 18, 1974, Emerg; November 19, 1986, Reg; March 17, 2011, Susp.	-do-	-do.-
Missouri:				
Ashland, City of, Boone County	290752	October 7, 1976, Emerg; August 24, 1984, Reg; March 17, 2011, Susp.	-do-	-do.-
Barton County, Unincorporated Areas	290785	September 10, 1984, Emerg; July 1, 1987, Reg; March 17, 2011, Susp.	-do-	-do.-
Boone County, Unincorporated Areas	290034	June 4, 1979, Emerg; June 15, 1983, Reg; March 17, 2011, Susp.	-do-	-do.-
Centralia, City of, Boone County	290035	January 31, 1975, Emerg; April 15, 1977, Reg; March 17, 2011, Susp.	-do-	-do.-
Columbia, City of, Boone County	290036	August 27, 1971, Emerg; August 27, 1971, Reg; March 17, 2011, Susp.	-do-	-do.-

State and location	Community No.	Effective date authorization/cancellation of sale of flood insurance in community	Current effective map date	Date certain Federal assistance no longer available in SFHAs
Hallsville, City of, Boone County	290712	April 6, 2005, Emerg; January 1, 2006, Reg; March 17, 2011, Susp.	-do-	-do.-
Hartsburg, Village of, Boone County	290037	December 15, 1975, Emerg; August 16, 1982, Reg; March 17, 2011, Susp.	-do-	-do.-
Lamar, City of, Barton County	290025	October 14, 1975, Emerg; February 15, 1985, Reg; March 17, 2011, Susp.	-do-	-do.-
Rocheport, City of, Boone and Howard Counties.	290038	October 2, 1975, Emerg; August 2, 1982, Reg; March 17, 2011, Susp.	-do-	-do.-
Sturgeon, City of, Boone County	290039	March 17, 1986, Emerg; May 1, 1987, Reg; March 17, 2011, Susp.	-do-	-do.-
Region VIII				
Colorado:				
Elbert County, Unincorporated Areas	080055	N/A, Emerg; August 13, 2007, Reg; March 17, 2011, Susp.	-do-	-do.-
Kiowa, Town of, Elbert County	080057	April 26, 1999, Emerg; March 17, 2011, Reg; March 17, 2011, Susp.	-do-	-do.-
Simla, Town of, Elbert County	080058	N/A, Emerg; October 22, 2009, Reg; March 17, 2011, Susp.	-do-	-do.-
Region X				
Alaska:				
Matanuska-Susitna, Borough of	020021	January 23, 1979, Emerg; May 1, 1985, Reg; March 17, 2011, Susp.	-do-	-do.-

*-do- = Ditto.
Code for reading third column: Emerg.—Emergency; Reg.—Regular; Susp.—Suspension.

Dated: February 23, 2011.

Edward L. Connor,

Acting Federal Insurance and Mitigation Administrator, Department of Homeland Security, Federal Emergency Management Agency.

[FR Doc. 2011–5132 Filed 3–7–11; 8:45 am]

BILLING CODE 9110–12–P

FEDERAL COMMUNICATIONS COMMISSION

47 CFR Part 11

[EB Docket No. 04–296; FCC 11–12]

Review of the Emergency Alert System

AGENCY: Federal Communications Commission.

ACTION: Final rule.

SUMMARY: In this document, the Federal Communications Commission (Commission) amends its rules governing the Emergency Alert System (EAS) to provide for national EAS testing and collection of data from such tests. This will help determine whether the EAS functions as intended to deliver a national Presidential alert.

DATES: Effective March 8, 2011.

FOR FURTHER INFORMATION CONTACT: Lisa Fowlkes, Deputy Bureau Chief, Public Safety and Homeland Security Bureau, at (202) 418–7452, or by e-mail at *Lisa.Fowlkes@fcc.gov.*

SUPPLEMENTARY INFORMATION: This is a summary of the Commission's *Third Report and Order* (*Third R&O*) in EB Docket No. 04–296, FCC 11–12, adopted on February 2, 2011, and released on February 3, 2011. The full text of this document is available for inspection and copying during normal business hours in the FCC Reference Center (Room CY–A257), 445 12th Street, SW., Washington, DC 20554. The complete text of this document also may be purchased from the Commission's copy contractor, Best Copy and Printing, Inc., 445 12th Street, SW., Room, CY–B402, Washington, DC 20554. The full text may also be downloaded at: *http://www.fcc.gov.*

1. The *Third R&O* amends the Commission's part 11 rules governing the EAS to require: all EAS Participants to participate in national EAS tests as scheduled by the Commission in consultation with the Federal Emergency Management Agency (FEMA); that the first national EAS test use the Emergency Alert Notification (EAN), the live event code for nationwide Presidential alerts; that the national test replace the monthly and weekly EAS tests in the month and week in which it is held; that the Commission's Public Safety and Homeland Security Bureau (Bureau) provide at least two months public notice prior to any national test of the EAS; EAS Participants to submit test-related data to the Bureau within 45 days following a national EAS test; and that test data received from EAS Participants be treated as presumptively confidential, but allow test data to be shared on a confidential basis with other Federal agencies and State governmental emergency management agencies that have confidentiality protection as least equal to that provided by the Freedom of Information Act (FOIA). The *Third R&O* also notes that the Commission will shortly be releasing a public notice establishing a voluntary electronic reporting system that EAS test participants may use as part of their participation in the national EAS test. The *Third R&O* also delegates authority to the Bureau to determine, in consultation with FEMA and with other EAS stakeholders, as appropriate, various administrative procedures for national tests, including test codes to be used and pre-test outreach.

I. Procedural Matters

A. Paperwork Reduction Act Analysis

2. This document contains modified information collection requirements subject to the Paperwork Reduction Act of 1995 (PRA), Public Law 104–13. It has been submitted to the Office of Management and Budget (OMB) for review under section 3507(d) of the PRA. OMB, the general public, and other Federal agencies are invited to comment on the new or modified information collection requirements contained in this proceeding. In addition, the Commission notes that pursuant to the Small Business Paperwork Relief Act of 2002, Public Law 107–198, *see* 44 U.S.C. 3506(c)(4),

it previously sought specific comment on how it might further reduce the information collection burden for small business concerns with fewer than 25 employees.

3. In this present document, the Commission has assessed the effects of the information collection associated with national testing of the EAS, and finds that because this information collection requests information that is readily available and easily accessible to all EAS Participants, and, further, that may be submitted electronically, none of the requirements in the collection will pose a substantial burden for businesses with fewer than 25 employees.

B. Congressional Review Act

4. The Commission will send a copy of this *Third R&O* in a report to be sent to Congress and the Government Accountability Office pursuant to the Congressional Review Act (CRA), *see* 5 U.S.C. 801(a)(1)(A).

II. Final Regulatory Flexibility Analysis

5. As required by the Regulatory Flexibility Act of 1980, as amended (RFA), an Initial Regulatory Flexibility Analysis (IRFA) was incorporated into the Second Further Notice of Proposed Rulemaking in EB Docket 04–296 (*Second FNPRM*). The Commission sought written comment on the proposals in the *Second FNPRM,* including comment on the IRFA. This Final Regulatory Flexibility Analysis (FRFA) conforms to the RFA.

A. Need for, and Objectives of, the Proposed Rules

6. This *Third R&O* seeks to ensure that the Commission's EAS rules better protect the life and property of all Americans. To further serve this goal, this *Third R&O* adopts a rule to implement national testing of the EAS through use of a coded EAS message which will replace a required monthly test, and requiring logging and provision to the Commission of test-related diagnostic information within 45 days of the test.

7. Specifically, this *Third R&O:*

- Requires all EAS Participants to participate in national EAS tests as scheduled by the Commission in consultation with FEMA;
- Requires that the first national EAS test use the EAN, the live event code for nationwide Presidential alerts;
- Requires that the national test replace the monthly and weekly EAS tests in the month and week in which it is held;
- Requires the Bureau to provide at least two months' public notice prior to any national test of the EAS;
- Requires EAS Participants to submit test-related data to the Bureau within 45 days following a national EAS test;
- Requires that test data received from EAS Participants be treated as presumptively confidential, but allow test data to be shared on a confidential basis with other Federal agencies and State governmental emergency management agencies that have confidentiality protection at least equal to that provided by the FOIA;
- Notes that the Commission will shortly be releasing a public notice establishing a voluntary electronic reporting system that EAS test participants may use as part of their participation in the national EAS test; and
- Delegates authority to the Bureau to determine, in consultation with FEMA and with other EAS stakeholders, as appropriate, various administrative procedures for national tests, including test codes to be used and pre-test outreach.

B. Summary of Significant Issues Raised by Public Comments in Response to the IRFA

8. There were no comments that specifically addressed the IRFA.

C. Description and Estimate of the Number of Small Entities to Which Rules Will Apply

9. The RFA directs agencies to provide a description of, and, where feasible, an estimate of, the number of small entities that may be affected by the rules adopted herein. The RFA generally defines the term "small entity" as having the same meaning as the terms "small business," "small organization," and "small governmental jurisdiction." In addition, the term "small business" has the same meaning as the term "small business concern" under the Small Business Act. A "small business concern" is one which: (1) Is independently owned and operated; (2) is not dominant in its field of operation; and (3) satisfies any additional criteria established by the Small Business Administration (SBA).

10. *Television Broadcasting.* The SBA has developed a small business sized standard for television broadcasting, which consists of all such firms having $14 million or less in annual receipts. Business concerns included in this industry are those "primarily engaged in broadcasting images together with sound." According to Commission staff review of BIA Publications, Inc. Master Access Television Analyzer Database, as of May 16, 2003, about 814 of the 1,220 commercial television stations in the United States had revenues of $12 million or less. We note, however, that, in assessing whether a business concern qualifies as small under the above definition, business (control) affiliations must be included. Our estimate, therefore, likely overstates the number of small entities that might be affected by our action, because the revenue figure on which it is based does not include or aggregate revenues from affiliated companies. There are also 2,127 low power television stations (LPTV). Given the nature of this service, we will presume that all LPTV licensees qualify as small entities under the SBA size standard.

11. *Radio Stations.* The revised rules and policies potentially will apply to all AM and commercial FM radio broadcasting licensees and potential licensees. The SBA defines a radio broadcasting station that has $7 million or less in annual receipts as a small business. A radio broadcasting station is an establishment primarily engaged in broadcasting aural programs by radio to the public. Included in this industry are commercial, religious, educational, and other radio stations. Radio broadcasting stations which primarily are engaged in radio broadcasting and which produce radio program materials are similarly included. However, radio stations that are separate establishments and are primarily engaged in producing radio program material are classified under another NAICS number. According to Commission staff review of BIA Publications, Inc. Master Access Radio Analyzer Database on March 31, 2005, about 10,840 (95 percent) of 11,410 commercial radio stations have revenue of $6 million or less. We note, however, that many radio stations are affiliated with much larger corporations having much higher revenue. Our estimate, therefore, likely overstates the number of small entities that might be affected by our action.

12. *Wired Telecommunications Carriers.* The 2007 North American Industry Classification System (NAICS) defines "Wired Telecommunications Carriers" as follows: "This industry comprises establishments primarily engaged in operating and/or providing access to transmission facilities and infrastructure that they own and/or lease for the transmission of voice, data, text, sound, and video using wired telecommunications networks. Transmission facilities may be based on a single technology or a combination of technologies. Establishments in this industry use the wired telecommunications network facilities

that they operate to provide a variety of services, such as wired telephony services, including VoIP services; wired (cable) audio and video programming distribution; and wired broadband Internet services. By exception, establishments providing satellite television distribution services using facilities and infrastructure that they operate are included in this industry." The SBA has developed a small business size standard for wireline firms within the broad economic census category, "Wired Telecommunications Carriers." Under this category, the SBA deems a wireline business to be small if it has 1,500 or fewer employees. Census Bureau data for 2002 show that there were 2,432 firms in this category that operated for the entire year. Of this total, 2,395 firms had employment of 999 or fewer employees, and 37 firms had employment of 1,000 employees or more. Thus, under this category and associated small business size standard, the majority of firms can be considered small.

13. *Wired Telecommunications Carriers—Cable and Other Program Distribution.* This category includes, among others, cable operators, direct broadcast satellite (DBS) services, home satellite dish (HSD) services, satellite master antenna television (SMATV) systems, and open video systems (OVS). The data we have available as a basis for estimating the number of such entities were gathered under a superseded SBA small business size standard formerly titled Cable and Other Program Distribution. The former Cable and Other Program Distribution category is now included in the category of Wired Telecommunications Carriers, the majority of which, as discussed above, can be considered small. According to Census Bureau data for 2002, there were a total of 1,191 firms in this previous category that operated for the entire year. Of this total, 1,087 firms had annual receipts of under $10 million, and 43 firms had receipts of $10 million or more but less than $25 million. Thus, we believe that a substantial number of entities included in the former Cable and Other Program Distribution category may have been categorized as small entities under the now superseded SBA small business size standard for Cable and Other Program Distribution. With respect to OVS, the Commission has approved approximately 120 OVS certifications with some OVS operators now providing service. Broadband service providers (BSPs) are currently the only significant holders of OVS certifications or local OVS franchises, even though OVS is one of four statutorily-recognized options for local exchange carriers (LECs) to offer video programming services. As of June 2006, BSPs served approximately 1.4 million subscribers, representing 1.46 percent of all MVPD households. Among BSPs, however, those operating under the OVS framework are in the minority. The Commission does not have financial information regarding the entities authorized to provide OVS, some of which may not yet be operational. We thus believe that at least some of the OVS operators may qualify as small entities.

14. *Cable System Operators (Rate Regulation Standard).* The Commission has developed its own small business size standard for cable system operators, for purposes of rate regulation. Under the Commission's rules, a "small cable company" is one serving 400,000 or fewer subscribers nationwide. We have estimated that there were 1,065 cable operators who qualified as small cable system operators at the end of 2005. Since then, some of those companies may have grown to serve over 400,000 subscribers, and others may have been involved in transactions that caused them to be combined with other cable operators. Consequently, the Commission estimates that there are now fewer than 1,065 small entity cable system operators that may be affected by the rules and policies proposed herein.

15. *Cable System Operators (Telecom Act Standard).* The Communications Act of 1934, as amended, ("Act") also contains a size standard for small cable system operators, which is "a cable operator that, directly or through an affiliate, serves in the aggregate fewer than 1 percent of all subscribers in the United States and is not affiliated with any entity or entities whose gross annual revenues in the aggregate exceed $250,000,000." The Commission has determined that there are 67,700,000 subscribers in the United States. Therefore, an operator serving fewer than 677,000 subscribers shall be deemed a small operator, if its annual revenues, when combined with the total annual revenues of all its affiliates, do not exceed $250 million in the aggregate. Based on available data, the Commission estimates that the number of cable operators serving 677,000 subscribers or fewer, totals 1,065. The Commission neither requests nor collects information on whether cable system operators are affiliated with entities whose gross annual revenues exceed $250 million, and therefore are unable, at this time, to estimate more accurately the number of cable system operators that would qualify as small cable operators under the size standard contained in the Act.

16. *Broadband Radio Service (FCC Auction Standard).* The established rules apply to Broadband Radio Service ("BRS," formerly known as Multipoint Distribution Systems, or "MDS") operated as part of a wireless cable system. The Commission has defined "small entity" for purposes of the auction of BRS frequencies as an entity that, together with its affiliates, has average gross annual revenues that are not more than $40 million for the preceding three calendar years. This definition of small entity in the context of MDS auctions has been approved by the SBA. The Commission completed its MDS auction in March 1996 for authorizations in 493 basic trading areas. Of 67 winning bidders, 61 qualified as small entities. At this time, we estimate that of the 61 small business MDS auction winners, 48 remain small business licensees.

17. *Wireless Telecommunications Carrier (except satellite).* BRS also includes licensees of stations authorized prior to the auction. As noted above, the SBA has developed a definition of small entities for pay television services, Cable and Other Subscription Programming, which includes all such companies generating $15 million or less in annual receipts. This definition includes BRS and thus applies to BRS licensees that did not participate in the MDS auction. Information available to us indicates that there are approximately 392 incumbent BRS licensees that do not generate revenue in excess of $11 million annually. Therefore, we estimate that there are at least 440 (392 pre-auction plus 48 auction licensees) small BRS providers as defined by the SBA and the Commission's auction rules which may be affected by the rules adopted herein. In addition, limited preliminary census data for 2002 indicate that the total number of cable and other program distribution companies increased approximately 46 percent from 1997 to 2002.

18. *Educational Broadband Service.* The proposed rules would also apply to Educational Broadband Service ("EBS," formerly known as Instructional Television Fixed Service or "ITFS") facilities operated as part of a wireless cable system. The SBA definition of small entities for pay television services, Cable and Other Subscription Programming also appears to apply to EBS. There are presently 2,032 EBS licensees. All but 100 of these licenses are held by educational institutions. Educational institutions are included in the definition of a small business.

However, we do not collect annual revenue data for EBS licensees, and are not able to ascertain how many of the 100 non-educational licensees would be categorized as small under the SBA definition. Thus, we tentatively conclude that at least 1,932 are small businesses and may be affected by the proposed rules.

19. *Incumbent Local Exchange Carriers (LECs).* We have included small incumbent LECs in this present IRFA analysis. As noted above, a "small business" under the RFA is one that, *inter alia,* meets the pertinent small business size standard (*e.g.,* a telephone communications business having 1,500 or fewer employees), and "is not dominant in its field of operation." The SBA's Office of Advocacy contends that, for RFA purposes, small incumbent LECs are not dominant in their field of operation because any such dominance is not "national" in scope. We have therefore included small incumbent local exchange carriers in this RFA analysis, although we emphasize that this RFA action has no effect on Commission analyses and determinations in other, non-RFA contexts. Neither the Commission nor the SBA has developed a small business size standard specifically for incumbent local exchange services. The appropriate size standard under SBA rules is for the category Wired Telecommunications Carriers. Under that size standard, such a business is small if it has 1,500 or fewer employees. According to Commission data, 1,303 carriers have reported that they are engaged in the provision of incumbent local exchange services. Of these 1,303 carriers, an estimated 1,020 have 1,500 or fewer employees and 283 have more than 1,500 employees. Consequently, the Commission estimates that most providers of incumbent local exchange service are small businesses that may be affected by our proposed rules.

20. *Competitive (LECs), Competitive Access Providers (CAPs),* "*Shared-Tenant Service Providers,*" *and* "*Other Local Service Providers.*" Neither the Commission nor the SBA has developed a small business size standard specifically for these service providers. The appropriate size standard under SBA rules is for the category Wired Telecommunications Carriers. Under that size standard, such a business is small if it has 1,500 or fewer employees. According to Commission data, 769 carriers have reported that they are engaged in the provision of either competitive access provider services or competitive local exchange carrier services. Of these 769 carriers, an estimated 676 have 1,500 or fewer employees and 93 have more than 1,500 employees. In addition, 12 carriers have reported that they are "Shared-Tenant Service Providers," and all 12 are estimated to have 1.500 or fewer employees. In addition, 39 carriers have reported that they are "Other Local Service Providers." Of the 39, an estimated 38 have 1,500 or fewer employees and one has more than 1,500 employees. Consequently, the Commission estimates that most providers of competitive local exchange service, competitive access providers, "Shared-Tenant Service Providers," and "Other Local Service Providers" are small entities that may be affected by our proposed rules.

21. *Satellite Telecommunications.* The Commission has not developed a small business size standard specifically for providers of satellite service. The appropriate size standard under SBA rules is for Satellite Telecommunications. Under that category, such a business is small if it has $15 million or less in average annual receipts. Under the category of Satellite Telecommunications, Census Bureau data for 1997 show that there were a total of 324 firms that operated for the entire year. Of this total, 273 firms had annual receipts of under $10 million, and an additional twenty-four firms had receipts of $10 million to $24,999,999. Thus, the majority of Satellite Telecommunications firms can be considered small.

22. *All Other Telecommunications.* This category includes "establishments primarily engaged in * * * providing satellite terminal stations and associated facilities operationally connected with one or more terrestrial communications systems and capable of transmitting telecommunications to or receiving telecommunications from satellite systems." Under that category, which is defined by the SBA, such a business is small if it has $25 million or less in average annual receipts. Of this total, 424 firms had annual receipts of $5 million to $9,999,999 and an additional 6 firms had annual receipts of $10 million to $24,999,990. Thus, under this second size standard, the majority of firms can be considered small.

D. Description of Projected Reporting, Recordkeeping, and Other Compliance Requirements

23. This *Third R&O* requires that EAS Participants record and submit to the Commission the following test-related diagnostic information for each alert received from each message source monitored at the time of the national test: (1) Whether they received the alert message during the designated test; (2) whether they retransmitted the alert; and (3) if they were not able to receive and/or transmit the alert, their 'best effort' diagnostic analysis regarding the cause or causes for such failure. It also requires EAS Participants to provide us with a description of their station identification and level of designation (PEP, LP–1, *etc.*); the date/time of receipt of the EAN message by all stations; the date/time of PEP station acknowledgement of receipt of the EAN message to FOC; the date/time of initiation of actual broadcast of the Presidential message; the date/time of receipt of the EAT message by all stations; who they were monitoring at the time of the test, and the make and model number of the EAS equipment that they utilized. These requirements are intended to advance our public safety mission and enhance the performance of the EAS while reducing regulatory burdens wherever possible.

E. Steps Taken To Minimize the Significant Economic Impact on Small Entities, and Significant Alternatives Considered

24. The RFA requires an agency to describe any significant alternatives that it has considered in developing its approach, which may include the following four alternatives (among others): "(1) the establishment of differing compliance or reporting requirements or timetables that take into account the resources available to small entities; (2) the clarification, consolidation, or simplification of compliance and reporting requirements under the rule for such small entities; (3) the use of performance rather than design standards; and (4) an exemption from coverage of the rule, or any part thereof, for such small entities."

25. The rules are designed to minimally impact all EAS participants, including small entities, while at the same time protecting the lives and property of all Americans, which confers a direct benefit on small entities. The *Second FNPRM* sought comment on how the Commission may better protect the lives and property of Americans. In commenting on this goal, commenters were invited to propose steps that the Commission may take to further minimize any significant economic impact on small entities. When considering proposals made by other parties, commenters were invited to propose significant alternatives that serve the goals of these proposals.

26. No commenters disputed the proposed requirement that all EAS Participants to participate in national EAS tests as scheduled by the Commission in consultation with

FEMA. While some commenters opposed a requirement that the first national EAS test use the EAN, the live event code for nationwide Presidential alerts, there is at present no other way to test the entire system for propagation of a national-level EAS alert. No commenter opposed the requirement that the national test replace the monthly and weekly EAS tests in the month and week in which it is held and this requirement in fact serves to minimize burdens on all participants be relieving them of certain testing obligations. While some commenters sought more than two months notice, the Order requires the Bureau to provide *at least* two months' public notice prior to any national test of the EAS. The impact on small entities will be a factor considered by the Bureau in making its determination of notice period.

27. The new rule requires EAS Participants to submit test-related data to the Bureau within 45 days following a national EAS test. This was an extension of the 30 days initially proposed in the *Second FNPRM* and will minimize the burden on all participants. A number of commenters requested the ability to submit the required test data electronically and this *Third R&O* provides for this alternative method of data submission, also lessening the economic impact on all entities. The requirement that test data received from EAS Participants be treated as presumptively confidential, but allowing test data to be shared on a confidential basis with other Federal agencies and State governmental emergency management agencies that have confidentiality protection at least equal to that provided by the Freedom of Information Act (FOIA), has no economic impact on small entities. In delegating authority to the Bureau to determine, in consultation with FEMA and with other EAS stakeholders, as appropriate, various administrative procedures for national tests, including test codes to be used and pre-test outreach, the Commission has instructed the Bureau to factor in the needs of all stakeholders, including small business entities.

28. *Report to Congress:* The Commission will send a copy of the *Third R&O* including this FRFA, in a report to be sent to Congress and the Government Accountability Office pursuant to the Congressional Review Act. In addition, the Commission will send a copy of the *Third R&O*, including this FRFA, to the Chief Counsel for Advocacy of the SBA. A copy of the *Third R&O* and FRFA (or summaries thereof) will also be published in the **Federal Register**.

III. Ordering Clauses

29. Accordingly, *it is ordered* that pursuant to sections 1, 2, 4(i), 4(o), 301, 303(r), 303(v), 307, 309, 335, 403, 624(g),706 and 715 of the Communications Act of 1934, as amended, 47 U.S.C. 151, 152, 154(i) and (o), 301, 303(r), 303(v), 307, 309, 335, 403, 544(g), 606, and 615, this Third Report and Order *is adopted.*

30. *It is further ordered* that the Commission's Consumer and Governmental Affairs Bureau, Reference Information Center, *shall send* a copy of this Third Report and Order, including the Final Regulatory Flexibility Analysis, to the Chief Counsel for Advocacy of the Small Business Administration.

List of Subjects in 47 CFR Part 11

Radio, Television, Emergency alerting.

Federal Communications Commission.

Bulah P. Wheeler,

Deputy Manager.

Final Rule

For the reasons discussed in the preamble, the Federal Communications Commission amends 47 CFR part 11 as follows:

PART 11—EMERGENCY ALERT SYSTEM (EAS)

■ 1. The authority citation for part 11 continues to read as follows:

Authority: 47 U.S.C. 151, 154(i) and (o), 303(r), 544(g) and 606.

■ 2. Revise § 11.61(a)(3) to read as follows:

§ 11.61 Tests of EAS procedures.

(a) * * *

(3) *National Tests.* (i) All EAS Participants shall participate in national tests as scheduled by the Commission in consultation with the Federal Emergency Management Agency (FEMA). Such tests will consist of the delivery by FEMA to PEP/NP stations of a coded EAS message, including EAS header codes, Attention Signal, Test Script, and EOM code. All other EAS Participants will then be required to relay that EAS message. The coded message shall utilize EAS test codes as designated by the Commission's rules.

(ii) A national test shall replace the required weekly and monthly tests for all EAS Participants, as set forth in paragraphs (a)(1) and (a)(2) of this section, in the week and month in which it occurs.

(iii) Notice shall be provided to EAS Participants by the Commission at least two months prior to the conduct of any such national test.

(iv) Test results as required by the Commission shall be logged by all EAS Participants and shall be provided to the Commission's Public Safety and Homeland Security Bureau within forty five (45) days following the test.

* * * * *

[FR Doc. 2011–5222 Filed 3–7–11; 8:45 am]

BILLING CODE 6712–01–P

DEPARTMENT OF COMMERCE

National Oceanic and Atmospheric Administration

50 CFR Part 622

[Docket No. 001005281–0369–02]

RIN 0648–XA263

Fisheries of the Caribbean, Gulf of Mexico, and South Atlantic; Coastal Migratory Pelagic Resources of the Gulf of Mexico and South Atlantic; Trip Limit Reduction

AGENCY: National Marine Fisheries Service (NMFS), National Oceanic and Atmospheric Administration (NOAA), Commerce.

ACTION: Temporary rule; trip limit reduction.

SUMMARY: NMFS reduces the trip limit for the hook-and-line component of the commercial sector for Gulf group king mackerel in the southern Florida west coast subzone to 500 lb (227 kg) of king mackerel per day in or from the exclusive economic zone (EEZ). This trip limit reduction is necessary to protect the Gulf king mackerel resource.

DATES: This rule is effective 12:01 a.m., local time, March 8, 2011, through June 30, 2011, unless changed by further notice in the **Federal Register**.

FOR FURTHER INFORMATION CONTACT: Steve Branstetter, telephone: 727–824–5305, fax: 727–824–5308, e-mail: *Steve.Branstetter@noaa.gov.*

SUPPLEMENTARY INFORMATION: The fishery for coastal migratory pelagic fish (king mackerel, Spanish mackerel, cero, cobia, little tunny, and, in the Gulf of Mexico only, dolphin and bluefish) is managed under the Fishery Management Plan for the Coastal Migratory Pelagic Resources of the Gulf of Mexico and South Atlantic (FMP). The FMP was prepared by the Gulf of Mexico and South Atlantic Fishery Management Councils (Councils) and is implemented under the authority of the Magnuson-Stevens Fishery Conservation and Management Act

(Magnuson-Stevens Act) by regulations at 50 CFR part 622.

On April 27, 2000, NMFS implemented the final rule (65 FR 16336, March 28, 2000) that divided the Florida west coast subzone of the Gulf of Mexico eastern zone into northern and southern subzones, and established their separate quotas. The king mackerel quota for the hook-and-line component of the commercial sector in the southern Florida west coast subzone is 520,312 lb (236,010 kg) (50 CFR 622.42(c)(1)(i)(A)(*2*)(*i*)).

In accordance with 50 CFR 622.44(a)(2)(ii)(B)(*2*), from the date that 75 percent of the southern Florida west coast subzone's hook-and-line gear quota has been harvested until a closure of the subzone's hook-and-line component has been effected or the fishing year ends, king mackerel in or from the EEZ may be possessed on board or landed from a permitted vessel in amounts not exceeding 500 lb (227 kg) per day.

NMFS has determined that 75 percent of the quota for the hook-and-line component of the commercial sector for Gulf group king mackerel from the southern Florida west coast subzone has been reached. Accordingly, a 500-lb (227-kg) trip limit applies to vessels in the hook-and-line component of the commercial sector for king mackerel in or from the EEZ in the southern Florida west coast subzone effective 12:01 a.m., local time, March 8, 2011. The 500-lb (227-kg) trip limit will remain in effect until the commercial sector closes or until the end of the current fishing year (June 30, 2011), whichever occurs first.

The Florida west coast subzone is that part of the eastern zone located south and west of 25°20.4′ N. lat. (a line directly east from the Miami-Dade/Monroe County, FL boundary) along the west coast of Florida to 87°31′06′ W. long. (a line directly south from the Alabama/Florida boundary). The Florida west coast subzone is further divided into northern and southern subzones. From November 1 through March 31, the southern subzone is designated as the area extending south and west from 25°20.4′ N. lat. to 26°19.8′ N. lat. (a line directly west from the Lee/Collier County, Florida, boundary), i.e., the area off Collier and Monroe Counties. Beginning April 1, the southern subzone is reduced to the area off Collier County, Florida, between 25°48′ N. lat. and 26°19.8′ N. lat.

Classification

This action responds to the best available information recently obtained from the fisheries. The Assistant Administrator for Fisheries, NOAA (AA), finds that the need to immediately implement this trip limit reduction for the king mackerel hook-and-line component of the commercial sector in the southern Florida west coast subzone constitutes good cause to waive the requirements to provide prior notice and opportunity for public comment pursuant to the authority set forth at 5 U.S.C. 553(b)(B) as such prior notice and opportunity for public comment is unnecessary and contrary to the public interest. Such procedures would be unnecessary because the rule implementing the quota and the associated requirement for closure of the commercial harvest when the quota is reached or projected to be reached has already been subject to notice and comment, and all that remains is to notify the public of the closure.

Allowing prior notice and opportunity for public comment on this action would be contrary to the public interest because any delay in the trip limit reduction of the commercial harvest could result in the commercial quota being exceeded. There is a need to immediately implement this action to protect the king mackerel resource because the capacity of the fishing fleet allows for rapid harvest of the quota. Prior notice and opportunity for public comment would require time and would potentially result in a harvest well in excess of the established quota.

For the aforementioned reasons, the AA also finds good cause to waive the 30-day delay in the effectiveness of this action under 5 U.S.C. 553(d)(3).

This action is taken under 50 CFR 622.43(a) and is exempt from review under Executive Order 12866.

Authority: 16 U.S.C. 1801 *et seq.*

Dated: March 3, 2011.

Emily H. Menashes,

Acting Director, Office of Sustainable Fisheries, National Marine Fisheries Service.

[FR Doc. 2011–5227 Filed 3–3–11; 4:15 pm]

BILLING CODE 3510–22–P

DEPARTMENT OF COMMERCE

National Oceanic and Atmospheric Administration

50 CFR Part 622

[Docket No. 0907271173–1137–04]

RIN 0648–AY11

Fisheries of the Caribbean, Gulf of Mexico, and South Atlantic; Snapper-Grouper Fishery Off the Southern Atlantic States; Amendment 17B; Correction

AGENCY: National Marine Fisheries Service (NMFS), National Oceanic and Atmospheric Administration (NOAA), Commerce.

ACTION: Correcting amendments.

SUMMARY: This document contains corrections to the final rule that implemented Amendment 17B to the Fishery Management Plan (FMP) for the Snapper-Grouper Fishery of the South Atlantic Region (Amendment 17B), which was published in the **Federal Register** on December 30, 2010.

DATES: This correction is effective March 8, 2011.

FOR FURTHER INFORMATION CONTACT: Anik Clemens, 727–824–5305; e-mail: *Anik.Clemens@noaa.gov.*

SUPPLEMENTARY INFORMATION:

Background

On December 30, 2010, a final rule was published to implement Amendment 17B (75 FR 82280). That final rule established annual catch limits and accountability measures for nine snapper-grouper species in the South Atlantic region. One of these accountability measures prohibits the possession of deep-water snapper-grouper species in or from the South Atlantic exclusive economic zone in depths greater than 240 ft (73 m). After the regulations implementing Amendment 17B became effective on January 31, 2011, it was determined that two of the waypoints defining the 240-ft (73-m) depth contour were in State waters.

Need for Correction

As published, the final rule contains errors in a table of coordinates in the regulatory text. In § 622.35, paragraph (o) contains a table of coordinates for the depth closure implemented in Amendment 17B for deep-water snapper-grouper. Within this table, an incorrect longitudinal coordinate was implemented for point K, and the coordinates for points O and U are within State boundaries. Through this

correcting amendment, the longitudinal coordinate for point K will be corrected and the coordinates for points O and U, as published in the final rule implementing Amendment 17B, will be removed and replaced with new boundary coordinates to reflect the State/Federal boundary. These new coordinates and State/Federal boundary lines will be included in the revised depth closure table of coordinates. All other information remains unchanged and will not be repeated in this correction.

Classification

Pursuant to 5 U.S.C. 553(b)(B), the Assistant Administrator for Fisheries, NOAA, finds good cause to waive prior notice and opportunity for additional public comment for this action because any delay of this action would be unnecessary and contrary to the public interest. This correcting amendment includes minor, non-substantive changes to regulatory text to clarify the boundaries of the snapper-grouper depth closure contained in the final rule for Amendment 17B to the FMP. These amendments do not modify, add or remove any rights, privileges or obligations of any individuals. Rather, one of the longitudinal coordinates published in the final rule was incorrect and two of the coordinates published in the final rule occurred in State waters. The new coordinates and State/Federal boundary lines published in this correcting amendment will alleviate unnecessary confusion for South Atlantic snapper-grouper fishermen. There will be no adverse affect on fishing stocks as a result of this amendment. However, by immediately implementing this correcting amendment, fishermen will better be able to plan their fishing trips by incorporating the correct boundary coordinates into their business plans. Because this is a minor technical amendment that will benefit the affected entities, public comment is both unnecessary and contrary to the public interest.

For the reasons stated above, the Assistant Administrator also finds good cause, pursuant to 5 U.S.C. 553(d), to waive the 30-day delay in effective date for this correction amendment. These revisions are minor, non-substantive changes and do not change operating practices in the South Atlantic snapper-grouper fishery. The immediate publication of the correct coordinates will provide fishermen the information they need to plan their fishing trips and alleviate confusion.

Because prior notice and opportunity for public comment are not required for this rule by 5 U.S.C. 553, or any other law, the analytical requirements of the Regulatory Flexibility Act, 5 U.S.C. 601 *et seq.,* are inapplicable.

This correcting amendment is exempt from review under Executive Order 12866.

List of Subjects in 50 CFR Part 622

Fisheries, Fishing, Puerto Rico, Reporting and recordkeeping requirements, Virgin Islands.

Dated: March 2, 2011.

Samuel D. Rauch III,

Deputy Assistant Administrator for Regulatory Programs, National Marine Fisheries Service.

Accordingly, 50 CFR part 622 is corrected by making the following correcting amendments:

PART 622—FISHERIES OF THE CARIBBEAN, GULF, AND SOUTH ATLANTIC

■ 1. The authority citation for part 622 continues to read as follows:

Authority: 16 U.S.C. 1801 *et seq.*

■ 2. In § 622.35, the table in paragraph (o) is revised to read as follows:

§ 622.35 Atlantic EEZ seasonal and/or area closures.

* * * * *

(o) * * *

Point	North lat. 10	West long. 10
A	36°31′01″	74°48′10″
B	35°57′29″	74°55′49″
C	35°30′49″	74°49′17″
D	34°19′41″	76°00′21″
E	33°13′31″	77°17′50″
F	33°05′13″	77°49′24″
G	32°24′03″	78°57′03″
H	31°39′04″	79°38′46″
I	30°27′33″	80°11′39″
J	29°53′21″	80°16′01″
K	29°24′03″	80°13′28″
L	28°19′29″	80°00′27″
M	27°32′05″	79°58′49″
N	26°50′29″	79°59′05″
From point N follow the State/Federal boundary to point O.		
O	25°43′57″	80°04′46″
P	25°31′03″	80°04′55″
Q	25°13′44″	80°09′40″
R	24°59′09″	80°19′51″
S	24°42′06″	80°46′38″
T	24°33′53″	81°10′23″
U	24°29′10″	81°32′27″
From point U follow the State/Federal boundary to point V.		
V	24°26′28″	81°45′06″
W	24°25′53″	81°47′53″
From point W follow the State/Federal boundary to point X.		
X	24°25′32″	81°58′38″
Y	24°25′49″	82°11′17″
Z	24°21′35″	82°22′32″
AA	24°21′29″	82°42′33″
BB	24°25′37″	83°00′00″

[FR Doc. 2011–5232 Filed 3–7–11; 8:45 am]

BILLING CODE 3210–22–P

DEPARTMENT OF COMMERCE

National Oceanic and Atmospheric Administration

50 CFR Part 679

[Docket No. 101126521–0640–02]

RIN 0648–XA271

Fisheries of the Exclusive Economic Zone Off Alaska; Pacific Cod by Catcher Vessels Less Than 60 Feet (18.3 m) Length Overall Using Jig or Hook-and-Line Gear in the Bogoslof Pacific Cod Exemption Area in the Bering Sea and Aleutian Islands Management Area

AGENCY: National Marine Fisheries Service (NMFS), National Oceanic and Atmospheric Administration (NOAA), Commerce.

ACTION: Temporary rule; closure.

SUMMARY: NMFS is prohibiting directed fishing for Pacific cod by catcher vessels less than 60 feet (18.3 m) length overall (LOA) using jig or hook-and-line gear in the Bogoslof Pacific cod exemption area of the Bering Sea and Aleutian Islands management area (BSAI). This action is necessary to prevent exceeding the limit of Pacific cod for catcher vessels less than 60 ft LOA using jig or hook-and-line gear in the Bogoslof Pacific cod exemption area in the BSAI.

DATES: Effective 1200 hrs, Alaska local time (A.l.t.), March 3, 2011, through 2400 hrs, A.l.t., December 31, 2011.

FOR FURTHER INFORMATION CONTACT: Josh Keaton, 907–586–7228.

SUPPLEMENTARY INFORMATION: NMFS manages the groundfish fishery in the BSAI according to the Fishery Management Plan for Groundfish of the Bering Sea and Aleutian Islands Management Area (FMP) prepared by the North Pacific Fishery Management Council under authority of the Magnuson-Stevens Fishery Conservation and Management Act. Regulations governing fishing by U.S.

vessels in accordance with the FMP appear at subpart H of 50 CFR part 600 and 50 CFR part 679.

In accordance with § 679.22(a)(7)(i)(C), the Administrator, Alaska Region, NMFS (Regional Administrator), has determined that 113 metric tons of Pacific cod have been caught by catcher vessels less than 60 ft LOA using jig or hook-and-line gear in the Bogoslof exemption area described at § 679.22(a)(7)(i)(C)(*1*). Consequently, the Regional Administrator is prohibiting directed fishing for Pacific cod by catcher vessels less than 60 ft (18.3 m) LOA using jig or hook-and-line gear in the Bogoslof Pacific cod exemption area.

After the effective date of this closure the maximum retainable amounts at § 679.20(e) and (f) apply at any time during a trip.

Classification

This action responds to the best available information recently obtained from the fishery. The Assistant Administrator for Fisheries, NOAA (AA), finds good cause to waive the requirement to provide prior notice and opportunity for public comment pursuant to the authority set forth at 5 U.S.C. 553(b)(B) as such requirement is impracticable and contrary to the public interest. This requirement is impracticable and contrary to the public interest as it would prevent NMFS from responding to the most recent fisheries data in a timely fashion and would delay the closure of Pacific cod by catcher vessels less than 60 ft LOA using jig or hook-and-line gear in the Bogoslof Pacific cod exemption area. NMFS was unable to publish a notice providing time for public comment because the most recent, relevant data only became available as of March 2, 2011.

The AA also finds good cause to waive the 30-day delay in the effective date of this action under 5 U.S.C. 553(d)(3). This finding is based upon the reasons provided above for waiver of prior notice and opportunity for public comment.

This action is required by § 679.22 and is exempt from review under Executive Order 12866.

Authority: 16 U.S.C. 1801 *et seq.*

Dated: March 3, 2011.

Emily H. Menashes,

Acting Director, Office of Sustainable Fisheries, National Marine Fisheries Service.

[FR Doc. 2011–5224 Filed 3–3–11; 4:15 pm]

BILLING CODE 3510–22–P

DEPARTMENT OF COMMERCE

National Oceanic and Atmospheric Administration

50 CFR Part 679

[Docket No. 101126521–0640–02]

RIN 0648–XA262

Fisheries of the Exclusive Economic Zone Off Alaska; Reallocation of Pollock in the Bering Sea and Aleutian Islands

AGENCY: National Marine Fisheries Service (NMFS), National Oceanic and Atmospheric Administration (NOAA), Commerce.

ACTION: Temporary rule.

SUMMARY: NMFS is reallocating the projected unused amounts of the Aleut Corporation's pollock directed fishing allowance and the Community Development Quota from the Aleutian Islands subarea to the Bering Sea subarea directed fisheries. These actions are necessary to provide opportunity for harvest of the 2011 total allowable catch of pollock, consistent with the goals and objectives of the Fishery Management Plan for Groundfish of the Bering Sea and Aleutian Islands Management Area.

DATES: Effective 1200 hrs, Alaska local time (A.l.t.), March 8, 2011, until 2400 A.l.t., December 31, 2011, unless otherwise modified or superseded through publication of a notification in the **Federal Register**.

FOR FURTHER INFORMATION CONTACT: Obren Davis, 907–586–7228.

SUPPLEMENTARY INFORMATION: NMFS manages the groundfish fishery in the Bering Sea and Aleutian Islands (BSAI) exclusive economic zone according to the Fishery Management Plan for Groundfish of the Bering Sea and Aleutian Islands Management Area (FMP) prepared by the North Pacific Fishery Management Council (Council) under authority of the Magnuson-Stevens Fishery Conservation and Management Act. Regulations governing fishing by U.S. vessels in accordance with the FMP appear at subpart H of 50 CFR part 600 and 50 CFR part 679.

In the Aleutian Islands subarea, the portion of the 2011 pollock total allowable catch (TAC) allocated to the Aleut Corporation's directed fishing allowance (DFA) is 15,500 metric tons (mt) and the Community Development Quota (CDQ) is 1,900 mt as established by the final 2011 and 2012 harvest specifications for groundfish in the BSAI (76 FR 11139, March 1, 2011).

As of March 1, 2011, the Administrator, Alaska Region, NMFS, (Regional Administrator) has determined that 12,500 mt of Aleut Corporation's DFA and 1,900 mt of pollock CDQ in the Aleutian Islands subarea will not be harvested. Therefore, in accordance with § 679.20(a)(5)(iii)(B)(*4*), NMFS reallocates 12,500 mt of Aleut Corporation's DFA and 1,900 mt of pollock CDQ from the Aleutian Islands subarea to the 2011 Bering Sea subarea allocations. The 1,900 mt of pollock CDQ is added to the 2011 Bering Sea CDQ DFA. The remaining 12,500 mt of pollock is apportioned to the Bering Sea subarea by AFA sector. The AFA Inshore sector receives 6,250 mt (50 percent), the AFA catcher/processor sector receives 5,000 mt (40 percent), and the AFA mothership sector receives 1,250 mt (10 percent). The 2011 pollock incidental catch allowance remains at 33,804 mt. As a result, the harvest specifications for pollock in the Aleutian Islands subarea included in the final harvest 2011 and 2012 specifications for groundfish in the BSAI (76 FR 11139, March 1, 2011) are revised as follows. For the Aleutian Islands subarea, 3,000 mt to Aleut Corporation's DFA and 0 mt to CDQ pollock. Furthermore, pursuant to § 679.20(a)(5), Table 3 of the final 2011 and 2012 harvest specifications for groundfish in the BSAI (76 FR 11139, March 1, 2011) is revised to make 2011 pollock allocations consistent with this reallocation. This reallocation results in proportional adjustments to the 2011 Aleut Corporation and CDQ pollock allocations established at § 679.20(a)(5).

TABLE 3—FINAL 2011 AND 2012 ALLOCATIONS OF POLLOCK TACS TO THE DIRECTED POLLOCK FISHERIES AND TO THE CDQ DIRECTED FISHING ALLOWANCES (DFA) [1]

[All amounts in metric tons]

Area and sector	2011 allocations	2011 A season [1]		2011 B season [1]	2012 Allocations	2012 A season [1]		2012 B season [1]
		A season DFA	SCA harvest limit [2]	B season DFA		A season DFA	SCA harvest limit [2]	B season DFA
Bering Sea subarea	1,266,400	n/a	n/a	n/a	1,253,658	n/a	n/a	n/a
CDQ DFA	127,100	50,840	35,588	76,260	125,366	50,146	35,102	75,219
ICA [1]	33,804	n/a	n/a	n/a	33,849	n/a	n/a	n/a
AFA Inshore	552,748	221,099	154,769	331,649	547,222	218,889	153,222	328,333
AFA Catcher/Processors [3]	442,198	176,879	123,816	265,319	437,777	175,111	122,578	262,666
Catch by C/Ps	404,612	161,845	n/a	242,767	400,566	160,227	n/a	240,340
Catch by CVs [3]	37,587	15,035	n/a	22,552	37,211	14,884	n/a	22,327
Unlisted C/P Limit [4]	2,211	884	n/a	1,327	2,189	876	n/a	1,313
AFA Motherships	110,550	44,220	30,954	66,330	109,444	43,778	30,644	65,667
Excessive Harvesting Limit [5]	193,462	n/a	n/a	n/a	191,528	n/a	n/a	n/a
Excessive Processing Limit [6]	331,649	n/a	n/a	n/a	328,333	n/a	n/a	n/a
Total Bering Sea DFA	1,105,496	442,198	309,539	663,298	1,094,443	437,777	306,444	656,666
Aleutian Islands subarea [1]	4,600	n/a	n/a	n/a	19,000	n/a	n/a	n/a
CDQ DFA	0	0	n/a	0	1,900	760	n/a	1,140
ICA	1,600	800	n/a	800	1,600	800	n/a	800
Aleut Corporation	3,000	3,000	n/a	0	15,500	15,500	n/a	0
Bogoslof District ICA [7]	150	n/a	n/a	n/a	150	n/a	n/a	n/a

[1] Pursuant to § 679.20(a)(5)(i)(A), the Bering Sea subarea pollock, after subtraction for the CDQ DFA (10 percent) and the ICA (3 percent), is allocated as a DFA as follows: inshore sector—50 percent, catcher/processor sector (C/P)—40 percent, and mothership sector—10 percent. In the Bering Sea subarea, 40 percent of the DFA is allocated to the A season (January 20–June 10) and 60 percent of the DFA is allocated to the B season (June 10–November 1). Pursuant to § 679.20(a)(5)(iii)(B)(*2*)(*i*) and (*ii*), the annual AI pollock TAC, after subtracting first for the CDQ directed fishing allowance (10 percent) and second the ICA (1,600 mt), is allocated to the Aleut Corporation for a directed pollock fishery. In the AI subarea, the A season is allocated 40 percent of the ABC and the B season is allocated the remainder of the directed pollock fishery.

[2] In the Bering Sea subarea, no more than 28 percent of each sector's annual DFA may be taken from the SCA before April 1. The remaining 12 percent of the annual DFA allocated to the A season may be taken outside of SCA before April 1 or inside the SCA after April 1. If less than 28 percent of the annual DFA is taken inside the SCA before April 1, the remainder will be available to be taken inside the SCA after April 1.

[3] Pursuant to § 679.20(a)(5)(i)(A)(*4*), not less than 8.5 percent of the DFA allocated to listed catcher/processors shall be available for harvest only by eligible catcher vessels delivering to listed catcher/processors.

[4] Pursuant to § 679.20(a)(5)(i)(A)(*4*)(*iii*), the AFA unlisted catcher/processors are limited to harvesting not more than 0.5 percent of the catcher/processors sector's allocation of pollock.

[5] Pursuant to § 679.20(a)(5)(i)(A)(*6*), NMFS establishes an excessive harvesting share limit equal to 17.5 percent of the sum of the non-CDQ pollock DFAs.

[6] Pursuant to § 679.20(a)(5)(i)(A)(7), NMFS establishes an excessive processing share limit equal to 30.0 percent of the sum of the non-CDQ pollock DFAs.

[7] The Bogoslof District is closed by the final harvest specifications to directed fishing for pollock. The amounts specified are for ICA only and are not apportioned by season or sector.

Classification

This action responds to the best available information recently obtained from the fishery. The Assistant Administrator for Fisheries, NOAA (AA), finds good cause to waive the requirement to provide prior notice and opportunity for public comment pursuant to the authority set forth at 5 U.S.C. 553(b)(B) as such requirement is impracticable and contrary to the public interest. This requirement is impracticable and contrary to the public interest as it would prevent NMFS from responding to the most recent fisheries data in a timely fashion and would delay the reallocation of AI pollock. Since the pollock fishery is currently open, it is important to immediately inform the industry as to the final Bering Sea subarea pollock allocations. Immediate notification is necessary to allow for the orderly conduct and efficient operation of this fishery; allow the industry to plan for the fishing season and avoid potential disruption to the fishing fleet as well as processors; and provide opportunity to harvest increased seasonal pollock allocations while value is optimum. NMFS was unable to publish a notice providing time for public comment because the most recent, relevant data only became available as of March 2, 2011.

The AA also finds good cause to waive the 30-day delay in the effective date of this action under 5 U.S.C. 553(d)(3). This finding is based upon the reasons provided above for waiver of prior notice and opportunity for public comment.

This action is required by § 679.20 and is exempt from review under Executive Order 12866.

Authority: 16 U.S.C. 1801 *et seq.*

Dated: March 3, 2011.

Emily H. Menashes,

Acting Director, Office of Sustainable Fisheries, National Marine Fisheries Service.

[FR Doc. 2011–5234 Filed 3–7–11; 8:45 am]

BILLING CODE 3510–22–P

Proposed Rules

Federal Register
Vol. 76, No. 45
Tuesday, March 8, 2011

This section of the FEDERAL REGISTER contains notices to the public of the proposed issuance of rules and regulations. The purpose of these notices is to give interested persons an opportunity to participate in the rule making prior to the adoption of the final rules.

DEPARTMENT OF HOMELAND SECURITY

Office of the Secretary

6 CFR Part 5

[Docket No. DHS–2010–0051]

Privacy Act of 1974: Implementation of Exemptions; Department of Homeland Security Office of Operations Coordination and Planning—002 National Operations Center Tracker and Senior Watch Officer Logs System of Records

AGENCY: Privacy Office, DHS.

ACTION: Notice of proposed rulemaking.

SUMMARY: The Department of Homeland Security is giving concurrent notice of a newly established system of records pursuant to the Privacy Act of 1974 for the Department of Homeland Security Office of Operations Coordination and Planning—002 National Operations Center Tracker and Senior Watch Officer Logs System of Records and this proposed rulemaking. The National Operations Center and Senior Watch Officer tracking functions were previously covered by Department of Homeland Security/Information Analysis and Infrastructure Protection—001 Homeland Security Operations Center Database, April 18, 2005. In this proposed rulemaking, the Department proposes to exempt portions of the system of records from one or more provisions of the Privacy Act because of criminal, civil, and administrative enforcement requirements.

DATES: Comments must be received on or before April 7, 2011.

ADDRESSES: You may submit comments, identified by docket number DHS–2010–0051, by one of the following methods:

- *Federal e-Rulemaking Portal: http://www.regulations.gov.* Follow the instructions for submitting comments.
- *Fax:* 703–483–2999.
- *Mail:* Mary Ellen Callahan, Chief Privacy Officer, Privacy Office, Department of Homeland Security, Washington, DC 20528.

Instructions: All submissions received must include the agency name and docket number for this notice. All comments received will be posted without change to *http://www.regulations.gov,* including any personal information provided.

Docket: For access to the docket to read background documents or comments received, go to *http://www.regulations.gov.*

FOR FURTHER INFORMATION CONTACT: For general questions please contact: Michael Page (202–357–7626), Privacy Point of Contact, Office of Operations Coordination and Planning, Department of Homeland Security, Washington, DC 20528. For privacy issues please contact: Mary Ellen Callahan (703–235–0780), Chief Privacy Officer, Privacy Office, Department of Homeland Security, Washington, DC 20528.

SUPPLEMENTARY INFORMATION:

Background: In accordance with the Privacy Act of 1974, 5 U.S.C. 552a, the Department of Homeland Security (DHS) Office of Operations Coordination and Planning (OPS) proposes to establish a new DHS system of records titled, "DHS/OPS—002 National Operations Center Tracker and Senior Watch Officer Logs System of Records."

The primary role of the Senior Watch Officer (SWO) and the Watch Officer Desks, is to provide technical assistance directly in support of the DHS core missions to provide situational awareness and establish a common operating picture for Federal, State, local, Tribal, and territorial agencies and organizations; foreign governments and international organizations; domestic security and emergency management officials; and private sector entities or individuals as it relates to all-threats and all-hazards, man-made disasters and acts of terrorism, and natural disasters, and ensure that information reaches government decision-makers.

The SWO Log is a synopsis, in the form of a word document, that records all significant information received and actions taken during a shift. The NOC Tracker Log is the underlying cumulative repository of all NOC responses to threats, incidents, significant activities and Requests for Information (RFI) that require a NOC tracking number. The NOC Tracker Log contains a copy of all documents and information that is requested, shared, and/or researched between all NOC watch stander desks.

The purpose of this system is to tie together the high volume of information, requests and responses for information, and data collection relevant to discreet events and issues as they arise, and making that information easily accessible in an organized form should a future event benefit from previously gathered information. The tracker numbers are used in a wide variety of products originated by the DHS/OPS NOC. They are shared inside and outside of DHS and serve as shorthand for tying data, use in internal and external reports, and agency actions to the event that caused them. DHS is authorized to implement this program primarily through 5 U.S.C. 301, 552, 552a; 44 U.S.C. 3101; 6 U.S.C. 121; Sections 201 and 514 of the Homeland Security Act of 2002, as amended; Section 520 of the Post Katrina Emergency Management Reform Act; 44 U.S.C. 3101; Executive Order (E.O.) 12958; E.O. 9397; E.O. 12333; E.O. 13356; E.O. 13388; and Homeland Security Presidential Directive 5. This system has an effect on individual privacy that is balanced by the need to fuse information together and tracking homeland security information coming into and going out of OPS, including the NOC. Routine uses contained in this notice include sharing with the Department of Justice (DOJ) for legal advice and representation; to a congressional office at the request of an individual; to the National Archives and Records Administration (NARA) for records management; to contractors in support of their contract assignment to DHS; to appropriate Federal, State, Tribal, local, international, foreign agency, or other appropriate entity including the privacy sector in their role aiding OPS in their mission; to agencies, organizations or individuals for the purpose of audit; to agencies, entities, or persons during a security or information compromise or risk; to an agency, organization, or individual when there could potentially be a risk to an individual; and to the news media in the interest of the public. None of the information collected by this system is done so under the Paperwork Reduction Act (PRA).

Consistent with DHS's information sharing mission, information stored in

the DHS/OPS—002 National Operations Center Tracker and Senior Watch Officer Logs System of Records may be shared with other DHS components, as well as appropriate Federal, State, local, Tribal, and territorial agencies and organizations; foreign governments and international organizations; domestic security and emergency management officials; and private sector entities or individuals. This sharing will only take place after DHS determines that the receiving component or agency has a need to know the information to carry out national security, law enforcement, immigration, intelligence, or other functions consistent with the routine uses set forth in this system of records notice. DHS has issued a Notice of Proposed Rulemaking consistent with this system of records elsewhere in the **Federal Register**. This newly established system will be included in DHS's inventory of record systems.

The NOC and SWO tracking functions were previously covered by DHS/Information Analysis and Infrastructure Protection (IAIP)—001 Homeland Security Operations Center Database (April 18, 2005, 70 FR 20061).

The Privacy Act embodies fair information principles in a statutory framework governing the means by which the United States Government collects, maintains, uses, and disseminates personally identifiable information. The Privacy Act applies to information that is maintained in a "system of records." A "system of records" is a group of any records under the control of an agency from which information is retrieved by the name of the individual or by some identifying number, symbol, or other identifying particular assigned to the individual. Individuals may request their own records that are maintained in a system of records in the possession or under the control of DHS by complying with DHS Privacy Act regulations, 6 CFR part 5.

The Privacy Act requires each agency to publish in the **Federal Register** a description of the type and character of each system of records that the agency maintains, and the routine uses that are contained in each system in order to make agency recordkeeping practices transparent, to notify individuals regarding the uses to which personally identifiable information is put, and to assist individuals in finding such files within the agency.

The Privacy Act allows Government agencies to exempt certain records from the access and amendment provisions. If an agency claims an exemption, however, it must issue a Notice of Proposed Rulemaking to make clear to the public the reasons why a particular exemption is claimed.

DHS is claiming exemptions from certain requirements of the Privacy Act for DHS/OPS—002 National Operations Center Tracker and Senior Watch Officer Logs System of Records. Some information in DHS/OPS—002 National Operations Center Tracker and Senior Watch Officer Logs System of Records relates to official DHS national security, law enforcement, immigration, and intelligence activities. These exemptions are needed to protect information relating to DHS activities from disclosure to subjects or others related to these activities. Specifically, the exemptions are required to preclude subjects of these activities from frustrating these processes; to avoid disclosure of activity techniques; to protect the identities and physical safety of confidential informants and law enforcement personnel; to ensure DHS' ability to obtain information from third parties and other sources; to protect the privacy of third parties; and to safeguard classified information. Disclosure of information to the subject of the inquiry could also permit the subject to avoid detection or apprehension.

The exemptions proposed here are standard law enforcement and national security exemptions exercised by a large number of Federal law enforcement and intelligence agencies. In appropriate circumstances, where compliance would not appear to interfere with or adversely affect the law enforcement purposes of this system and the overall law enforcement process, the applicable exemptions may be waived on a case by case basis.

A notice of system of records for DHS/OPS—002 National Operations Center Tracker and Senior Watch Officer Logs System of Records is also published in this issue of the **Federal Register**.

List of Subjects in 6 CFR Part 5

Freedom of information; Privacy.

For the reasons stated in the preamble, DHS proposes to amend Chapter I of Title 6, Code of Federal Regulations, as follows:

PART 5—DISCLOSURE OF RECORDS AND INFORMATION

1. The authority citation for part 5 continues to read as follows:

Authority: 6 U.S.C. 101 *et seq.;* Pub. L. 107–296, 116 Stat. 2135; 5 U.S.C. 301. Subpart A also issued under 5 U.S.C. 552. Subpart B also issued under 5 U.S.C. 552a.

2. Add at the end of Appendix C to Part 5, the following new paragraph 54:

Appendix C to Part 5—DHS Systems of Records Exempt From the Privacy Act

* * * * *

54. The DHS/OPS—002 National Operations Center Tracker and Senior Watch Officer Logs System of Records consists of electronic and paper records and will be used by DHS/OPS. The DHS/OPS—002 National Operations Center Tracker and Senior Watch Officer Logs System of Records is a repository of information held by DHS in connection with its several and varied missions and functions, including, but not limited to: the enforcement of civil and criminal laws; investigations, inquiries, and proceedings there under; national security and intelligence activities. The DHS/OPS—002 National Operations Center Tracker and Senior Watch Officer Logs System of Records contains information that is collected by, on behalf of, in support of, or in cooperation with DHS and its components and may contain personally identifiable information collected by other Federal, State, local, Tribal, foreign, or international government agencies. The Secretary of Homeland Security is exempting this system from the following provisions of the Privacy Act, subject to limitations set forth in 5 U.S.C. 552a(c)(3); (d); (e)(1), (e)(4)(G), (e)(4)(H), (e)(4)(I); and (f) pursuant to 5 U.S.C. 552a(k)(1), (k)(2), and (k)(3). Exemptions from these particular subsections are justified, on a case-by-case basis to be determined at the time a request is made, for the following reasons:

(a) From subsection (c)(3) (Accounting for Disclosures) because release of the accounting of disclosures could alert the subject of an investigation of an actual or potential criminal, civil, or regulatory violation to the existence of that investigation and reveal investigative interest on the part of DHS as well as the recipient agency. Disclosure of the accounting would therefore present a serious impediment to law enforcement efforts and/or efforts to preserve national security. Disclosure of the accounting would also permit the individual who is the subject of a record to impede the investigation, to tamper with witnesses or evidence, and to avoid detection or apprehension, which would undermine the entire investigative process.

(b) From subsection (d) (Access to Records) because access to the records contained in this system of records could inform the subject of an investigation of an actual or potential criminal, civil, or regulatory violation to the existence of that investigation and reveal investigative interest on the part of DHS or another agency. Access to the records could permit the individual who is the subject of a record to impede the investigation, to tamper with witnesses or evidence, and to avoid detection or apprehension. Amendment of the records could interfere with ongoing investigations and law enforcement activities and would impose an unreasonable administrative burden by requiring investigations to be continually reinvestigated. In addition, permitting access and amendment to such information could disclose security-sensitive information that could be detrimental to homeland security.

(c) From subsection (e)(1) (Relevancy and Necessity of Information) because in the course of investigations into potential violations of Federal law, the accuracy of information obtained or introduced occasionally may be unclear, or the information may not be strictly relevant or necessary to a specific investigation. In the interests of effective law enforcement, it is appropriate to retain all information that may aid in establishing patterns of unlawful activity.

(d) From subsections (e)(4)(G), (e)(4)(H), and (e)(4)(I) (Agency Requirements) and (f) (Agency Rules), because portions of this system are exempt from the individual access provisions of subsection (d) for the reasons noted above, and therefore DHS is not required to establish requirements, rules, or procedures with respect to such access. Providing notice to individuals with respect to existence of records pertaining to them in the system of records or otherwise setting up procedures pursuant to which individuals may access and view records pertaining to themselves in the system would undermine investigative efforts and reveal the identities of witnesses, and potential witnesses, and confidential informants.

Dated: February 25, 2011.

Mary Ellen Callahan,

Chief Privacy Officer, Department of Homeland Security.

[FR Doc. 2011–5094 Filed 3–7–11; 8:45 am]

BILLING CODE 9110–9A–P

DEPARTMENT OF THE TREASURY

Office of Thrift Supervision

12 CFR Part 567

[Docket No. OTS–2011–0002]

RIN 1550–AC41

Risk-Based Capital Standards: Advanced Capital Adequacy Framework—Basel II; Establishment of a Risk-Based Capital Floor

AGENCY: Office of Thrift Supervision, Treasury.

ACTION: Notice of proposed rulemaking.

SUMMARY: The Office of Thrift Supervision (OTS) proposes to: Amend its advanced risk-based capital adequacy standards (advanced approaches rules) [1] to be consistent with certain provisions of the Dodd-Frank Wall Street Reform and Consumer Protection Act (the Act) [2] and amend the general risk-based capital rules [3] to provide limited flexibility consistent with section 171(b) of the Act for recognizing the relative risk of certain assets generally not held by depository institutions.

DATES: Comments on this notice of proposed rulemaking must be received by May 9, 2011.

ADDRESSES: Comments should be directed to:

OTS: You may submit comments, identified by OTS–2011–0002 by any of the following methods:

Federal eRulemaking Portal: "Regulations.gov": Go to *http://www.regulations.gov* and follow the instructions for submitting comments.

- *Mail:* Regulation Comments, Chief Counsel's Office, Office of Thrift Supervision, 1700 G Street, NW., Washington, DC 20552, Attention: OTS–2011–0002.
- *Fax:* (202) 906–6518.
- *Hand Delivery/Courier:* Guard's Desk, East Lobby Entrance, 1700 G Street, NW., from 9 a.m. to 4 p.m. on business days, Attention: Regulation Comments, Chief Counsel's Office, *Attention:* OTS–2011–0002.
- *Instructions:* All submissions received must include the agency name and docket number for this rulemaking. All comments received will be posted without change, including any personal information provided. Comments received, including attachments and other supporting materials, are part of the public record and subject to public disclosure. Do not enclose any information in your comment or supporting materials that you consider confidential or inappropriate for public disclosure.
- *Viewing Comments Electronically:* Go to *http://www.regulations.gov* and follow the instructions for reading comments.
- *Viewing Comments On-Site:* You may inspect comments at the Public Reading Room, 1700 G Street, NW., by appointment. To make an appointment for access, call (202) 906–5922, send an e-mail to *public.info@ots.treas.gov,* or send a facsimile transmission to (202) 906–6518. (Prior notice identifying the materials you will be requesting will assist us in serving you.) We schedule appointments on business days between 10 a.m. and 4 p.m. In most cases, appointments will be available the next business day following the date we receive a request.

FOR FURTHER INFORMATION CONTACT: Sonja White, Director, Capital Policy, (202) 906–7857, Teresa A. Scott, Senior Policy Analyst, Capital Policy, (202) 906–6478, or Marvin Shaw, Senior Attorney, Regulations and Legislation Division, (202) 906–6639, Office of Thrift Supervision, 1700 G Street, NW., Washington, DC 20552.

SUPPLEMENTARY INFORMATION:

I. Background

A. The Dodd-Frank Wall Street Reform and Consumer Protection Act

Section 171(b)(2) of the Dodd-Frank Wall Street Reform and Consumer Protection Act (the Act) [4] states that the Federal banking agencies [5] shall establish minimum risk-based capital requirements [6] applicable to insured depository institutions, depository institution holding companies, and nonbank financial companies supervised by the Federal Reserve (covered institutions). In particular, and as described in more detail below, sections 171(b)(1) and (2) specify that the minimum leverage and risk-based capital requirements established under section 171 shall not be less than "generally applicable" capital requirements, which shall serve as a floor for any capital requirements the agencies may require. Moreover, sections 171(b)(1) and (2) specify that the Federal banking agencies may not establish leverage or risk-based capital requirements for covered institutions that are quantitatively lower than the generally applicable leverage or risk-based capital requirements in effect for insured depository institutions as of the date of enactment of the Act.

[1] 12 CFR part 567, Appendix C.

[2] Public Law 111–203, § 171, 124 Stat. 1376, 1435–38 (2010).

[3] 12 CFR part 567.

[4] Public Law 111–203, § 171, 124 Stat. 1376, 1435–38 (2010).

[5] The Office of Thrift Supervision (OTS), the Office of Comptroller of the Currency (OCC), the Board of Governors of the Federal Reserve System (Board), and the Federal Deposit Insurance Corporation (FDIC) are considered Federal banking agencies. Section 312 of the Act provides for the transfer of OTS functions to the FDIC, OCC, and Board, on the transfer date, which is July 21, 2011 (unless the Secretary of the Treasury designates a later date, but not later than January 21, 2012). More specifically, the Act transfers authority over Federal savings associations to the OCC, authority over State savings associations to the FDIC, and authority over savings and loan holding companies to the Board. OTS rulemaking authority relating to savings associations and savings and loan holding companies will be transferred to the OCC and Board, respectively. 12 U.S.C. 5412.

[6] OTS's capital regulations applicable to savings associations are set forth at 12 CFR part 567. Section 303 of the Riegle Community Development and Regulatory Improvement Act of 1994 (12 U.S.C. 4803) directs the agencies to work jointly to make uniform all regulations and guidelines implementing common statutory or supervisory policies. Accordingly, the banking agencies generally issue capital standards whose substance is as similar as possible, thereby minimizing interagency differences. Due to timing considerations, the OCC, Board, and FDIC published a notice of proposed rulemaking (Joint NPR) in the **Federal Register** which addressed section 171 of the Dodd-Frank Act (75 FR 82317, December 30, 2010). OTS is issuing today's NPR which essentially parallels the substance of the joint proposal.

B. Advanced Approaches Rules

On December 7, 2007, the Federal banking agencies implemented the advanced approaches rules, which are mandatory for U.S. depository institutions and bank holding companies (collectively, banking organizations) meeting certain thresholds for total consolidated assets or foreign exposure.[7] The advanced approaches rules incorporate a series of proposals released by the Basel Committee on Banking Supervision (Basel Committee or BCBS), including the Basel Committee's comprehensive June 2006 release entitled "International Convergence of Capital Measurement and Capital Standards: A Revised Framework" (New Accord).[8]

The advanced approaches rules establish a series of transitional floors to provide a smooth transition to the advanced approaches rules and to limit temporarily the amount by which a banking organization's risk-based capital requirements could decline relative to the general risk-based capital rules over a period of at least three years following completion of a satisfactory parallel run. The advanced approaches rules place limits on the amount by which a banking organization's risk-based capital requirements may decline. Under the advanced approaches rules, the banking organization must take the risk-based capital ratios equal to the lesser of (i) the organization's ratios calculated under the advanced approaches rules and (ii) the organization's ratios calculated under the general risk-based capital rules,[9] with risk-weighted assets multiplied by 95 percent, 90 percent, and 85 percent during the first, second, and third transitional floor periods, respectively, and compare these ratios to its minimum risk-based capital ratio requirements under section 3 of the advanced approaches rules.[10] Under this approach, banking organizations that use the advanced approaches rule could operate with lower minimum risk-based capital requirements during a transitional floor period, and potentially thereafter, than would be required under the general risk-based capital rules. At this time, no savings association or other banking organization has entered a transitional floor period and all organizations are required to compute their risk-based capital requirements using the general risk-based capital rules.

C. Requirements of Section 171 of the Act

Section 171(a)(2) of the Act defines the term "generally applicable risk-based capital requirements" to mean: "(A) the risk-based capital requirements, as established by the appropriate Federal banking agencies to apply to insured depository institutions under the prompt corrective action regulations implementing section 38 of the Federal Deposit Insurance Act, regardless of total consolidated asset size or foreign financial exposure; and (B) includes the regulatory capital components in the numerator of those capital requirements, the risk-weighted assets in the denominator of those capital requirements, and the required ratio of the numerator to the denominator." Section 171(b)(2) of the Act further provides that "[t]he appropriate Federal banking agencies shall establish minimum risk-based capital requirements on a consolidated basis for insured depository institutions, depository institution holding companies, and nonbank financial companies supervised by the Board of Governors. The minimum risk-based capital requirements established under this paragraph shall not be less than the generally applicable risk-based capital requirements, which shall serve as a floor for any capital requirements that the agency may require, nor quantitatively lower than the generally applicable risk-based capital requirements that were in effect for insured depository institutions as of the date of enactment of this Act."

In accordance with section 38 of the Federal Deposit Insurance Act,[11] the Federal banking agencies established minimum leverage and risk-based capital requirements for insured depository institutions for prompt corrective action (PCA rules).[12] All insured institutions, regardless of their total consolidated assets or foreign exposure, must compute their minimum risk-based capital requirements for PCA purposes using the general risk-based capital rules, which currently are the "generally applicable risk-based capital requirements" defined by Section 171(a)(2) of the Act.

D. Effect of Section 171 of the Act on Certain Institutions and Their Assets

As explained in the Joint NPR, certain covered institutions may not previously have been subject to consolidated risk-based capital requirements. Some of these companies are likely to be similar in nature to most depository institutions and bank holding companies subject to the general risk-based capital rules. Other covered institutions may be different with exposure types and risks that were not contemplated when the general risk-based capital rules were developed. The Financial Stability Oversight Council has not yet designated any nonbank financial companies to be supervised by the Board; over time it is conceivable that it will designate one or more companies whose activities are quite different than those addressed in the general risk-based capital rules. As noted in the Joint NPR, the Board will be supervising these institutions for the first time and expects that there will be cases when it needs to evaluate the risk-based capital treatment of specific exposures not typically held by depository institutions, and that do not have a specific risk weight under the generally applicable risk-based capital requirements.

Under the general risk-based capital rules, exposures are generally assigned to five risk weight categories, that is, 0 percent, 20 percent, 50 percent, 100 percent, and 200 percent, according to their relative riskiness. Assets not explicitly included in a lower risk weight category are assigned to the 100 percent risk weight category. Going forward, there may be situations where exposures of a depository institution holding company or a nonbank financial company supervised by the Board not only do not wholly fit within the terms of a risk weight category, but also impose risks that are not commensurate with the risk weight otherwise specified in the generally applicable risk-based capital requirements.

For example, there are some material exposures of insurance companies that, while not riskless, would be assigned to a 100 percent risk weight category

[7] 72 FR 69288 (December 7, 2007). Subject to prior supervisory approval, other banking organizations can opt to use the advanced approaches rules. *See* 72 FR 69397 (December 7, 2007).

[8] The BCBS is a committee of banking supervisory authorities established by the central bank governors of the G–10 countries in 1975. The BCBS issued the New Accord to modernize its first capital Accord, which was endorsed by the BCBS members in 1988 and implemented by the agencies in 1989. The New Accord, the 1988 Accord, and other documents issued by the BCBS are available through the Bank for International Settlements' Web site at *http://www.bis.org*.

[9] 12 CFR part 567, Appendix C. *See also,* 12 CFR part 3, Appendix A (OCC); 12 CFR parts 208 and 225, Appendix A (Board); 12 CFR part 325, appendix A (FDIC).

[10] Under the advanced approaches rules, the minimum tier 1 risk-based capital requirement is 4 percent and the total risk-based capital requirement is 8 percent. *See* 12 CFR, part 567, Appendix C (OTS), *See also,* 12 CFR part 3, Appendix C (OCC); 12 CFR part 208, Appendix F and 12 CFR part 225, Appendix G (Board); and 12 CFR part 325 Appendix D (FDIC).

[11] *See* Public Law 102–242; 105 Stat. 2242 (1991).

[12] 12 CFR part 565 (OTS).

because they are not explicitly assigned to a lower risk weight category. An automatic assignment to the 100 percent risk weight category without consideration of an exposure's economic substance could overstate the risk of the exposure and produce uneconomic capital requirements for a covered institution.

II. Proposed Rule

A. Generally Applicable Risk-Based Capital Requirement Floor

Consistent with the Joint NPR, the OTS is proposing to modify its advanced approaches rule consistent with section 171(b)(2). In particular, like the other agencies, OTS is proposing to revise its advanced approaches rule by replacing the transitional floors in section 21(e) of the advanced approaches rule with a permanent floor equal to the tier 1 and total risk-based capital requirements under the current generally applicable risk-based capital rules. Thus, OTS is proposing to require each banking organization subject to the advanced approaches rule to maintain the systems and records necessary to calculate its required minimum risk-based capital requirements under both the general risk-based capital rules and the advanced approaches rules. Each quarter, each banking organization subject to the advanced approaches rules must calculate and compare its minimum tier 1 and total risk-based capital ratios as calculated under the general risk-based capital rules and the advanced approaches risk-based capital rules. The banking organization would then compare the lower of the two tier 1 risk-based capital ratios and the lower of the two total risk-based capital ratios to the minimum tier 1 ratio requirement of 4 percent and total risk-based capital ratio requirement of 8 percent in section 3 of the advanced approaches rules [13] to determine if it met its minimum capital requirements.

OTS is also proposing to eliminate the paragraphs of its advanced approaches rule dealing with the transitional floor periods, and the interagency study. These parts of the advanced approaches rules no longer serve a purpose.

Question 1: OTS seeks comment generally on the impact of a permanent floor on the minimum risk-based capital requirements for banking organizations subject to the advanced approaches rules, and on the manner in which OTS and the other Federal banking agencies are proposing to implement the provisions of section 171(b) of the Act.

B. Change to Generally Applicable Risk-Based Capital Requirements

The proposed floor, consistent with the requirements of section 171(b)(2), is based on the generally applicable risk-based capital requirements for depository institutions. To address the appropriate capital requirement for low risk assets that non-depository institutions may hold and for which there is no explicit capital treatment in the general risk-based capital rules, consistent with the other banking agencies, OTS is proposing that such exposures receive the capital treatment applicable under the capital guidelines for bank holding companies under limited circumstances. The circumstances are intended to allow for an appropriate capital requirement for low risk nonbanking exposures without creating unintended new opportunities for depository institutions to engage in capital arbitrage. OTS therefore proposes to limit this treatment to cases in which a depository institution is not authorized to hold the asset under applicable law other than under debt previously contracted or similar authority, and the risks associated with the asset are substantially similar to the risks of assets that receive a lower risk weight. Accordingly, OTS is proposing a change to the general risk-based capital rules for depository institutions to permit this limited flexibility to appropriately address exposures of depository institution holding companies and nonbank financial companies supervised by the Board. OTS requests comment on this change to the general risk-based capital rules.

Question 2: For what specific types of exposures do commenters believe this treatment is appropriate? Does the proposal provide sufficient flexibility to address the exposures of depository institution holding companies and nonbank financial companies supervised by the Federal Reserve? If not, how should the proposal be changed to recognize the considerations outlined in this section?

Consistent with the joint efforts of the Federal banking agencies and the Basel Committee to enhance the regulatory capital rules, OTS anticipates that the generally applicable risk-based capital requirements and advanced approaches rule will be amended from time to time. These amendments would reflect advances in risk sensitivity and other potentially substantive changes to fundamental aspects of the New Accord such as the definition of capital, treatment of counterparty credit risk, and new regulatory capital elements such as an international leverage ratio and prudential capital buffers.

OTS will consider each proposed change to the risk-based capital rules and determine whether it is appropriate to implement the change by rulemaking based on the implications of each proposal for the capital adequacy of banking organizations, the implementation costs of such proposals, and the nature of any unintended consequences or competitive issues. The generally applicable risk-based capital requirements and generally applicable leverage capital requirements that OTS and the other agencies may establish in the future would, as required under the Act, become the minimum leverage and risk-based capital requirements for all banking organizations. Furthermore, as provided under the Act, any future amendments to the leverage requirements or risk-based capital requirements established by the Federal banking agencies may not result in capital requirements that are "quantitatively lower" than the generally applicable leverage requirements or risk-based capital requirements in effect as of the date of enactment of the Act.

To comply with this provision of the Act, OTS along with the other Federal banking agencies anticipate performing a quantitative analysis of the likely effect on capital requirements as part of developing future amendments to the capital rules to ensure that any new capital framework is not quantitatively lower than the requirements in effect as of the date of enactment of the Act. In the Joint NPR, the OCC, FDIC, and Board stated that they would not anticipate proposing to require banking organizations to compute two sets of generally applicable capital requirements from current and historic frameworks as the generally applicable requirements are amended over time. Those agencies further stated that they have not yet determined the quantitative method for measuring the equivalence of current, historic, and proposed future capital frameworks.

Question 3: OTS requests comment on the most appropriate method of conducting the aforementioned analysis. What are potential quantitative methods for comparing future capital requirements to ensure that any new capital framework is not quantitatively lower than the requirements in effect as of the date of the enactment of the Act?

The Federal banking agencies anticipate addressing aspects of Section 171 not addressed in this proposed rule in a subsequent rulemaking.

[13] 12 CFR part 567 (OTS). *See also,* 12 CFR part 3, Appendix C, § 3 (OCC); 12 CFR part 208, Appendix F, § 3 and 12 CFR part 225, Appendix G, § 3 (Board); and 12 CFR part 325, § 3 Appendix D (FDIC).

Question 4: OTS seeks comment on all other aspects of this proposed rule, including the costs and benefits. What, if any, changes should OTS and the other agencies make to the proposed rule or the risk-based capital framework to better balance costs and benefits?

III. Regulatory Analyses

A. Executive Orders 13563 and 12866

Executive Order 13563 "Improving Regulations and Regulatory Review" affirms and supplements Executive Order 12866, "Regulatory Planning and Review, which requires Federal agencies to prepare a regulatory impact analysis for agency actions that are found to be "significant regulatory actions." Significant regulatory actions include, among other things, rulemakings that "have an annual effect on the economy of $100 million or more or adversely affect in a material way the economy, a sector of the economy, productivity, competition, jobs, the environment, public health or safety, or State, local, or Tribal governments or communities." Pursuant to Executive Order 12866, OMB's Office of Information and Regulatory Affairs (OIRA) has designated the proposed rule to be significant.

Based on initial assessment of the costs and benefits likely to be incurred to comply with this proposed rulemaking, OTS anticipates that the effect on the economy of the final rule would not exceed the $100 million annual threshold.

B. OTS Regulatory Impact Assessment

1. Requirements of Proposed Regulation

a. Permanent Floor

As noted below, the OCC, the Board, and the FDIC published a notice of proposed rulemaking (Joint NPR) that addressed section 171 of the Dodd-Frank Act, (75 FR 82317)(the Act), on December 30, 2010. Consistent with the Joint NPR, OTS is proposing to modify its advanced approaches rule consistent with section 171(b)(2) of the Act. In particular, like the other agencies, OTS is proposing to revise its advanced approaches rule by replacing the transitional floors in section 21(e) of the advanced approaches rule with a permanent floor equal to the tier 1 and total risk-based capital requirements under the current generally applicable risk-based capital rules. The Federal banking agencies implemented the advanced approaches rules on December 7, 2007 that are mandatory for U.S. depository institutions and bank holding companies (collectively, banking organizations) that have $250 billion or more in total consolidated assets or more than $10 billion in foreign exposure.

Thus, OTS is proposing to require each savings association subject to the advanced approaches rule to maintain the systems and records necessary to calculate its required minimum risk-based capital requirements under both the general risk-based capital rules and the advanced approaches rules. Each quarter, each savings association subject to the advanced approaches rules must calculate and compare its minimum tier 1 and total risk-based capital ratios as calculated under the general risk-based capital rules and the advanced approaches risk-based capital rules. The savings association would then compare the lower of the two tier 1 risk-based capital ratios and the lower of the two total risk-based capital ratios to the minimum tier 1 ratio requirement of 4 percent and total risk-based capital ratio requirement of 8 percent in section 3 of the advanced approaches rules to determine if it met its minimum capital requirements.

OTS reviewed the holdings and corporate structure of 941 savings associations subject to OTS regulation. As of this analysis, only two savings associations ($1.5 billion in total assets; and $15 billion in total assets, respectively), due to their corporate ownership structure by larger banking organizations, are subject to the advanced approaches rule. Both have begun the parallel run portion of preparation for the advanced approach, and they are unlikely to enter the first transitional floor within the next six months. One other savings association may be eligible for the advance approach because its foreign exposure exceeds $10 billion. However, it has not yet submitted an implementation plan, which must be approved before the institution begins the parallel run portion of its preparation; it is not likely to do so in the next six months. Section 312 of the Act provides for the transfer of OTS functions to the FDIC, OCC, and Board, on the transfer date, which is July 21, 2011 (unless the Secretary of the Treasury designates a later date, but not later than January 21, 2012). More specifically, the Act transfers authority over Federal savings associations to the OCC, authority over State savings associations to the FDIC, and authority over savings and loan holding companies to the Board. OTS rulemaking authority relating to savings associations and savings and loan holding companies will be transferred to the OCC and Board, respectively.

b. Implementation Costs

In estimating the implementation costs to the covered institutions, OTS assumed that costs would generally fall in two areas:

- Quarterly calculation costs to determine minimum risk-based capital requirements.
- The costs of maintaining higher capital levels, if required.

Given that OTS currently has, at most, three smaller savings associations that may be subject to the rule, the annual costs of calculating alternative minimum capital requirements are likely to be small. Two of the savings associations are subsidiaries of larger banking organizations that are required to calculate their overall risk-based capital requirements under a rule promulgated by the other banking agencies, and thus the marginal costs for the two savings association are likely to be minimal. Whether these particular institutions would be required to hold additional capital is very difficult to determine at this time. Any costs associated with holding additional capital would be offset, to some degree, by the reduced costs of borrowing, as the institution would then be better capitalized and its borrowing costs reduced because of its lowered risk. The sum of the identified costs is likely, given these three institutions, to fall well below the $100 million annual cost benchmark.

2. Risk Weights for Holding Company Assets

While none of three savings associations currently hold such assets, to address the appropriate capital requirement for low risk assets that non-depository institutions may hold and for which there is no explicit capital treatment in the general risk-based capital rules, consistent with the other banking agencies and consistent with the Joint NPR, OTS is proposing that such exposures receive the capital treatment applicable under the capital guidelines for bank holding companies under limited circumstances. The circumstances are intended to allow for an appropriate capital requirement for low risk nonbanking exposures without creating unintended new opportunities for depository institutions to engage in capital arbitrage. OTS therefore proposes to limit this treatment to cases in which a depository institution is not authorized to hold the asset under applicable law other than under debt previously contracted or similar authority, and the risks associated with the asset are substantially similar to the risks of assets that receive a lower risk

weight. Accordingly, consistent with the other banking agencies, OTS is proposing a change to the general risk-based capital rules to permit this limited flexibility to appropriately address certain exposures of depository institution holding companies and nonbank financial companies supervised by the Board.

3. Implementation Costs

It is difficult to assess the benefit that this rule making would convey, as (1) it applies to certain nonbank-like exposures of depository holding companies and nonbank financial companies supervised by the Board, and (2) it is very narrow in scope but is being proposed to address unforeseen circumstances in which the absence of an existing risk weight designation would require substantially more capital than a comparability test would suggest is appropriate.

4. Conclusion

Because of the limited number of institutions and the amount of assets involved, OTS concludes that the impact of this proposed rulemaking would not exceed $100 million in annual costs.

C. Regulatory Flexibility Act Analysis

Pursuant to section 605(b) of the Regulatory Flexibility Act,[14] (RFA), the regulatory flexibility analysis otherwise required under section 604 of the RFA is not required if an agency certifies that the rule will not have a significant economic impact on a substantial number of small entities (defined for purposes of the RFA to include banks with assets less than or equal to $175 million) and publishes its certification and a short, explanatory statement in the **Federal Register** along with its rule.

The rule would affect savings associations that use the advanced approaches rules to calculate risk-based capital requirements according to certain internal ratings-based and internal model approaches. A savings association must use the advanced approaches rules only if: (i) It has consolidated total assets (as reported on its most recent year-end regulatory report) equal to $250 billion or more; (ii) it has consolidated total on-balance sheet foreign exposures at the most recent year-end equal to $10 billion or more; or (iii) it is a subsidiary of a bank holding company or bank that would be required to use the advanced approaches rules to calculate its risk-based capital requirements.

With respect to the proposed changes to the general risk-based capital rules, the proposal has the potential to affect the risk weights applicable only to assets that generally are impermissible for savings associations to hold. These proposed changes are accordingly unlikely to have a significant impact on savings associations. OTS also notes that the changes to the general risk-based capital rules would not impose any additional obligations, restrictions, burdens, or reporting, recordkeeping or compliance requirements on savings associations including small banking organizations, nor do they duplicate, overlap or conflict with other Federal rules.

OTS estimates that no small savings associations are required to use the advanced approaches rules.[15] Therefore, OTS believes that the proposed rule will not result in a significant economic impact on a substantial number of small entities.

D. OTS Unfunded Mandates Reform Act of 1995 Determinations

Section 202 of the Unfunded Mandates Reform Act of 1995, Public Law 104–4 (UMRA) requires that an agency prepare a budgetary impact statement before promulgating a rule that includes a Federal mandate that may result in the expenditure by State, local, and Tribal governments, in the aggregate, or by the private sector of $100 million or more (adjusted annually for inflation) in any one year. If a budgetary impact statement is required, section 205 of the UMRA also requires an agency to identify and consider a reasonable number of regulatory alternatives before promulgating a rule. The OTS has determined that its proposed rule will not result in expenditures by State, local, and Tribal governments, or by the private sector, of $100 million or more. Accordingly, OTS has not prepared a budgetary impact statement or specifically addressed the regulatory alternatives considered.

E. Paperwork Reduction Act

In accordance with the requirements of the Paperwork Reduction Act of 1995,[16] OTS may not conduct or sponsor, and the respondent is not required to respond to, an information collection unless it displays a currently valid OMB control number. OTS has an established information collection for the paperwork burden imposed by the advanced approaches rule.[17] This notice of proposed rulemaking would replace the transitional floors in section 21(e) of the advanced approaches rule with a permanent floor equal to the tier 1 and total risk-based capital requirements under the current generally applicable risk-based capital rules. The proposed change to transitional floors would change the basis for calculating a data element that must be reported to OTS under an existing requirement. However, it would have no impact on the frequency or response time for the reporting requirement and, therefore, does not constitute a substantive or material change subject to OMB review.

F. Plain Language

Section 722 of the Gramm-Leach-Bliley Act requires the agencies to use plain language in all proposed and final rules published after January 1, 2000. In light of this requirement, OTS has sought to present the proposed rule in a simple and straightforward manner. OTS invites comment on whether it could take additional steps to make the proposed rule easier to understand.

List of Subjects in 12 CFR Part 567

Capital, Reporting and recordkeeping requirements, Risk, Savings associations.

Authority and Issuance

For the reasons stated in the preamble, the Office of Thrift Supervision proposes to amend part 567 of chapter V of Title 12, Code of Federal Regulations as follows:

PART 567—CAPITAL

1. The authority citation for part 3 continues to read as follows:

Authority: 12 U.S.C. 1462, 1462a, 1463, 1464, 1467a, and 1828 (note).

2. In § 567.6, add new paragraph (a)(1)(v) as follows:

§ 567.6 Risk-based capital credit risk-weight categories.

* * * * *

(a) * * *

(1) * * *

(v) Subject to the requirements in paragraphs (a)(1)(v)(A) and (B) of this section, a savings association may assign an asset not included in the categories above to the risk weight category applicable under the capital guidelines for bank holding companies (12 CFR part 225, appendix A), provided that all of the following conditions apply:

(A) The savings association is not authorized to hold the asset under

[14] 5 U.S.C. 605(b).

[15] All totals are as of September 30, 2010.

[16] 44 U.S.C. 3501–3521.

[17] *See* Risk-Based Capital Reporting for Institutions Subject to the Advanced Capital Adequacy Framework, FFIEC 101, OTS OMB Number 1550–0115.

applicable law other than debt previously contracted or similar authority; and

(B) The risks associated with the asset are substantially similar to the risks of assets that are otherwise assigned to a risk weight category less than 100 percent under this section.

* * * * *

3. In Appendix C to part 567:

a. Revise Part I, section 3 to read as set forth below; and

b. Remove section 21(e).

Appendix C to Part 567—Risk-Based Capital Requirements—Internal Ratings-Based and Advanced Measurement Approaches

Part I. General Provisions

* * * * *

Section 3. Minimum Risk-Based Capital Requirements

(a)(1) Except as modified by paragraph (c) of this section or by section 23 of this appendix, each savings association must meet a minimum:

(i) Total risk-based capital ratio of 8.0 percent; and

(ii) Tier 1 risk-based capital ratio of 4.0 percent.

(2) A savings association's total risk-based capital ratio is the lower of:

(i) Its total qualifying capital to total risk-weighted assets; and

(ii) Its total risk-based capital ratio as calculated under part 567.

(3) A savings association's tier 1 risk-based capital ratio is the lower of:

(i) Its tier 1 capital to total risk-weighted assets; and

(ii) Its tier 1 risk-based capital ratio as calculated under part 567.

(b) Each savings association must hold capital commensurate with the level and nature of all risks to which the savings association is exposed.

(c) When a savings association subject to any applicable market risk rule calculates its risk-based capital requirements under this appendix, the savings association must also refer to any applicable market risk rule for supplemental rules to calculate risk-based capital requirements adjusted for market risk.

* * * * *

Dated: January 31, 2011.

By the Office of Thrift Supervision.

John E. Bowman,

Acting Director.

[FR Doc. 2011–5011 Filed 3–7–11; 8:45 am]

BILLING CODE P

DEPARTMENT OF COMMERCE

Economic Development Administration

13 CFR Chapter III

[Docket No.: 110119042–1174–02]

RIN 0610–XA04

Request for Comments: Review and Improvement of EDA's Regulations

AGENCY: Economic Development Administration, Department of Commerce.

ACTION: Notice and request for comments; extending public comment deadline.

SUMMARY: On February 1, 2011, the Economic Development Administration (EDA) published a **Federal Register** notice requesting public input to improve the agency's regulations (76 FR 5501). Because of strong interest in the agency's efforts to streamline and update its regulations, EDA publishes this notice to extend the deadline for submitting regulatory comments.

DATES: Comments must be received no later than 5 p.m. Eastern Time on April 11, 2011.

ADDRESSES: Comments will continue to be accepted by the following methods:

- *Federal eRulemaking Portal: http://www.regulations.gov.* Follow the instructions for submitting comments.
- *Agency Web Site: http://www.eda.gov/.* EDA has created an online feature for submitting comments. Follow the instructions at *http://www.eda.gov/.*
- *E-mail: regulations@eda.doc.gov.* Include "Comments on EDA's regulations" and Docket No. 110119042–1041–01 in the subject line of the message.
- *Fax:* (202) 482–5671, Attention: Office of Chief Counsel. Please indicate "Comments on EDA's regulations" and Docket No. 110119042–1041–01 on the cover page.
- *Mail:* Economic Development Administration, Office of Chief Counsel, Suite D–100, U.S. Department of Commerce, 1401 Constitution Avenue, NW., Washington, DC 20230. Please indicate "Comments on EDA's regulations" and Docket No. 110119042–1041–01 on the envelope.

FOR FURTHER INFORMATION CONTACT: Jamie Lipsey, Attorney Advisor, U.S. Department of Commerce, Economic Development Administration, Office of Chief Counsel, 1401 Constitution Avenue, NW., Suite D–100, Washington, DC 20230; telephone: (202) 482–4687.

SUPPLEMENTARY INFORMATION: EDA's regulations, which are codified at 13 CFR chapter III, provide the framework through which the agency administers its economic development assistance programs. In a **Federal Register** notice published on February 1, 2011 (76 FR 5501), EDA requested public feedback on any obstacles created by EDA's current regulations and ways to improve them to help the agency better advance innovative economic development in the 21st century. Because of strong interest in this initiative and to ensure our stakeholders have ample time to comment, EDA is extending the deadline for the submission of comments from March 9, 2011, to April 11, 2011. Although EDA welcomes comments on all of its regulations, the agency requests particular input on those regulations that impact the creation and growth of Regional Innovation Clusters (RICs) and on the agency's property management regulations. Please see the notice and request for comments, 76 FR 5501 (February 1, 2011), and EDA's Web site at *http://www.eda.gov/* for more information. As part of the Administration's commitment to open government, EDA is interested in broad public and stakeholder participation in this effort and strives to create a simplified regulatory system that balances the agency's fiduciary and transparency responsibilities with good, commonsense customer service to our stakeholders and the American people.

Comments should be submitted to EDA as described in the **ADDRESSES** section of this notice. EDA strongly encourages the use of the online feature on the agency's Web site to share comments and suggestions, which is easily accessible at *http://www.eda.gov/* and offers participants an opportunity to view the comments of others. EDA will consider all comments submitted in response to this notice that are received by 5 p.m. Eastern Time on April 11, 2011, as referenced under **DATES** EDA will not accept public comments accompanied by a request that a part or all of the material be treated confidentially for any reason; EDA will not consider such comments and will return such comments and materials to the commenter. All public comments (including faxed or e-mailed comments) submitted in response to this notice must be in writing and will be a matter of public record. All comments submitted will be available for public inspection and copying at *http://www.regulations.gov.*

Dated: March 2, 2011.

Otto Barry Bird,

Chief Counsel.

[FR Doc. 2011–5128 Filed 3–7–11; 8:45 am]

BILLING CODE 3510–WH–P

DEPARTMENT OF TRANSPORTATION

Federal Aviation Administration

14 CFR Part 39

[Docket No. FAA–2011–0153; Directorate Identifier 2010–NM–022–AD]

RIN 2120–AA64

Airworthiness Directives; The Boeing Company Model 777–200 and –300 Series Airplanes

AGENCY: Federal Aviation Administration (FAA), DOT.

ACTION: Notice of proposed rulemaking (NPRM).

SUMMARY: We propose to adopt a new airworthiness directive (AD) for certain Model 777–200 and –300 series airplanes. This proposed AD would require removing the electrical system control panel, changing the wiring, installing a new electrical power control panel, and installing new operational software for the electrical load management system and configuration database. This proposed AD results from an in-flight entertainment (IFE) systems review. We are proposing this AD to ensure that the flightcrew is able to turn off electrical power to the IFE system and other non-essential electrical systems through a switch in the flight compartment in the event of smoke or flames. In the event of smoke or flames in the airplane flight deck or passenger cabin, the flightcrew's inability to turn off electrical power to the IFE system and other non-essential electrical systems could result in the inability to control smoke or flames in the airplane flight deck or passenger cabin during a non-normal or emergency situation.

DATES: We must receive comments on this proposed AD by April 22, 2011.

ADDRESSES: You may send comments by any of the following methods:

- *Federal eRulemaking Portal:* Go to *http://www.regulations.gov.* Follow the instructions for submitting comments.
- *Fax:* 202–493–2251.
- *Mail:* U.S. Department of Transportation, Docket Operations, M–30, West Building Ground Floor, Room W12–140, 1200 New Jersey Avenue, SE., Washington, DC 20590.
- *Hand Delivery:* U.S. Department of Transportation, Docket Operations, M–30, West Building Ground Floor, Room W12–140, 1200 New Jersey Avenue, SE., Washington, DC 20590, between 9 a.m. and 5 p.m., Monday through Friday, except Federal holidays.

For service information identified in this proposed AD, contact Boeing Commercial Airplanes, Attention: Data & Services Management, P.O. Box 3707, MC 2H–65, Seattle, Washington 98124–2207; telephone 206–544–5000, extension 1; fax 206–766–5680; e-mail *me.boecom@boeing.com;* Internet *https://www.myboeingfleet.com.* You may review copies of the referenced service information at the FAA, Transport Airplane Directorate, 1601 Lind Avenue, SW., Renton, Washington. For information on the availability of this material at the FAA, call 425–227–1221.

Examining the AD Docket

You may examine the AD docket on the Internet at *http://www.regulations.gov;* or in person at the Docket Management Facility between 9 a.m. and 5 p.m., Monday through Friday, except Federal holidays. The AD docket contains this proposed AD, the regulatory evaluation, any comments received, and other information. The street address for the Docket Office (telephone 800–647–5527) is in the **ADDRESSES** section. Comments will be available in the AD docket shortly after receipt.

FOR FURTHER INFORMATION CONTACT: Joe Salameh, Aerospace Engineer, Systems and Equipment Branch, ANM–130S, FAA, Seattle Aircraft Certification Office, 1601 Lind Avenue, SW., Renton, Washington 98057–3356; telephone (425) 917–6454; fax (425) 917–6590.

SUPPLEMENTARY INFORMATION:

Comments Invited

We invite you to send any written relevant data, views, or arguments about this proposed AD. Send your comments to an address listed under the **ADDRESSES** section. Include "Docket No. FAA–2011–0153; Directorate Identifier 2010–NM–022–AD" at the beginning of your comments. We specifically invite comments on the overall regulatory, economic, environmental, and energy aspects of this proposed AD. We will consider all comments received by the closing date and may amend this proposed AD because of those comments.

We will post all comments we receive, without change, to *http://www.regulations.gov,* including any personal information you provide. We will also post a report summarizing each substantive verbal contact we receive about this proposed AD.

Discussion

In response to numerous reports of smoke or flames in the passenger cabin of various models of transport category airplanes, we conducted a comprehensive in-flight entertainment (IFE) systems review. Earlier investigation of the reports had revealed that the source of the smoke and flames was from cabin IFE system components, including electronic seat boxes mounted under passenger seats, IFE wirings, IFE monitors, cabin lighting, wall outlets, and other non-essential cabin electrical systems.

The systems review disclosed that in order to minimize the risk of smoke or flames in the passenger cabin, a switch is needed in the flight compartment to enable the flightcrew to turn off electrical power to the IFE system and other non-essential electrical systems. In the event of smoke or flames in the airplane flight deck or passenger cabin, the flightcrew's inability to turn off power to the IFE system and other non-essential electrical systems, if not corrected, could result in the inability to control smoke or flames in the airplane flight deck or passenger cabin during a non-normal or emergency situation.

Relevant Service Information

We have reviewed Boeing Service Bulletin 777–24–0074, Revision 1, dated October 5, 2006. This service bulletin describes procedures for removing the electrical power control panel, changing the wiring, and installing a new electrical power control panel having the two new cabin power control switches.

Boeing Service Bulletin 777–24–0074, Revision 1, dated October 5, 2006, also specifies prior or concurrent accomplishment of Boeing Service Bulletin 777–24–0070, dated April 4, 2002, which describes procedures for installing new operational software (OPS) for the electrical load management system and new configuration database software.

Boeing Service Bulletin 777–24–0074, Revision 1, dated October 5, 2006, refers to Boeing Component Service Bulletin 233W3202–24–04, Revision 1, dated September 25, 2003, as an additional source of guidance for installing the passenger compartment electrical power isolation switches.

FAA's Determination and Requirements of This Proposed AD

We are proposing this AD because we evaluated all relevant information and determined the unsafe condition described previously is likely to exist or develop in other products of these same

type designs. This proposed AD would require accomplishing the actions specified in the service information described previously.

Costs of Compliance

We estimate that this proposed AD would affect 42 airplanes of U.S. registry. The following table provides the estimated costs for U.S. operators to comply with this proposed AD.

TABLE—ESTIMATED COSTS

Action	Work hours	Average labor rate per hour	Parts	Cost per product	Number of U.S.-registered airplanes	Fleet cost
Modification	4	$85	$751	$1,091	42	$45,822
Concurrent modification (Boeing Service Bulletin 777–24–0070)	2	85	0	170	42	7,140

Authority for This Rulemaking

Title 49 of the United States Code specifies the FAA's authority to issue rules on aviation safety. Subtitle I, section 106, describes the authority of the FAA Administrator. "Subtitle VII: Aviation Programs" describes in more detail the scope of the Agency's authority.

We are issuing this rulemaking under the authority described in "Subtitle VII, Part A, Subpart III, Section 44701: General requirements." Under that section, Congress charges the FAA with promoting safe flight of civil aircraft in air commerce by prescribing regulations for practices, methods, and procedures the Administrator finds necessary for safety in air commerce. This regulation is within the scope of that authority because it addresses an unsafe condition that is likely to exist or develop on products identified in this rulemaking action.

Regulatory Findings

We determined that this proposed AD would not have federalism implications under Executive Order 13132. This proposed AD would not have a substantial direct effect on the States, on the relationship between the national Government and the States, or on the distribution of power and responsibilities among the various levels of government.

For the reasons discussed above, I certify this proposed regulation:

1. Is not a "significant regulatory action" under Executive Order 12866,

2. Is not a "significant rule" under the DOT Regulatory Policies and Procedures (44 FR 11034, February 26, 1979), and

3. Will not have a significant economic impact, positive or negative, on a substantial number of small entities under the criteria of the Regulatory Flexibility Act.

You can find our regulatory evaluation and the estimated costs of compliance in the AD Docket.

List of Subjects in 14 CFR Part 39

Air transportation, Aircraft, Aviation safety, Incorporation by reference, Safety.

The Proposed Amendment

Accordingly, under the authority delegated to me by the Administrator, the FAA proposes to amend 14 CFR part 39 as follows:

PART 39—AIRWORTHINESS DIRECTIVES

1. The authority citation for part 39 continues to read as follows:

Authority: 49 U.S.C. 106(g), 40113, 44701.

§ 39.13 [Amended]

2. The FAA amends § 39.13 by adding the following new AD:

The Boeing Company: Docket No. FAA–2011–0153; Directorate Identifier 2010–NM–022–AD.

Comments Due Date

(a) We must receive comments by April 22, 2011.

Affected ADs

(b) None.

Applicability

(c) This AD applies to The Boeing Company Model 777–200 and –300 series airplanes, certificated in any category, as identified in Boeing Service Bulletin 777–24–0074, Revision 1, dated October 5, 2006.

Subject

(d) Air Transport Association (ATA) of America Code 24: Electrical power.

Unsafe Condition

(e) This AD results from an in-flight entertainment (IFE) systems review. We are issuing this AD to ensure that the flightcrew is able to turn off electrical power to the IFE system and other non-essential electrical systems through a switch in the flight compartment in the event of smoke or flames. In the event of smoke or flames in the airplane flight deck or passenger cabin, the flightcrew's inability to turn off electrical power to the IFE system and other non-essential electrical systems could result in the inability to control smoke or flames in the airplane flight deck or passenger cabin during a non-normal or emergency situation.

Compliance

(f) You are responsible for having the actions required by this AD performed within the compliance times specified, unless the actions have already been done.

Modification

(g) Within 60 months after the effective date of this AD, remove the electrical power control panel, change the wiring, and install a new electrical power control panel, in accordance with Boeing Service Bulletin 777–24–0074, Revision 1, dated October 5, 2006.

Note 1: Boeing Service Bulletin 777–24–0074, Revision 1, dated October 5, 2006, refers to Boeing Component Service Bulletin 233W3202–24–04, Revision 1, dated September 25, 2003, as an additional source of guidance for installing the passenger compartment electrical power isolation switches.

Concurrent Requirements

(h) Prior to or concurrently with accomplishing the requirements of paragraph (g) of this AD, install the electrical load management system operational software and configuration database software, in accordance with the Accomplishment Instructions of Boeing Service Bulletin 777–24–0070, dated April 4, 2002.

Alternative Methods of Compliance (AMOCs)

(i)(1) The Manager, Seattle Aircraft Certification Office (ACO), FAA, has the authority to approve AMOCs for this AD, if requested using the procedures found in 14 CFR 39.19. Send information to ATTN: Joe Salameh, Aerospace Engineer, Systems and Equipment Branch, ANM–130S, FAA, Seattle Aircraft Certification Office, 1601 Lind Avenue, SW., Renton, Washington 98057–3356; telephone (425) 917–6454; fax (425) 917–6590. Information may be e-mailed to: *9-ANM-Seattle-ACO-AMOC-Requests@faa.gov.*

(2) To request a different method of compliance or a different compliance time for this AD, follow the procedures in 14 CFR 39.19. Before using any approved AMOC, notify your appropriate principal inspector, or lacking a principal inspector, the manager of the local flight standards district office/certificate holding district office. The AMOC approval letter must specifically reference this AD.

Issued in Renton, Washington on February 22, 2011.

Kalene C. Yanamura,

Acting Manager, Transport Airplane Directorate, Aircraft Certification Service.

[FR Doc. 2011–5158 Filed 3–7–11; 8:45 am]

BILLING CODE 4910–13–P

DEPARTMENT OF TRANSPORTATION

Federal Aviation Administration

14 CFR Part 39

[Docket No. FAA–2011–0155; Directorate Identifier 2009–NM–141–AD]

RIN 2120–AA64

Airworthiness Directives; The Boeing Company 737–200, –200C, –300, –400, and –500 Series Airplanes

AGENCY: Federal Aviation Administration (FAA), Department of Transportation (DOT).

ACTION: Notice of proposed rulemaking (NPRM).

SUMMARY: The FAA proposes to supersede an existing airworthiness directive (AD) that applies to certain Boeing Model 737–200, –200C, –300, –400, and –500 series airplanes. The existing AD currently requires repetitive inspections to find fatigue cracking of certain upper and lower skin panels of the fuselage, and follow-on and corrective actions if necessary. The existing AD also includes a terminating action for the repetitive inspections of certain modified or repaired areas only. This proposed AD would add new inspections for cracking of the fuselage skin along certain chem-milled lines, and corrective actions if necessary. This proposed AD would also reduce certain thresholds and intervals required by the existing AD. This proposed AD results from reports of new findings of vertical cracks in the fuselage skin along the chem-milled steps adjacent to the butt joints. We are proposing this AD to detect and correct fatigue cracking of the skin panels, which could result in sudden fracture and failure of the skin panels of the fuselage, and consequent rapid decompression of the airplane.

DATES: We must receive comments on this proposed AD by April 22, 2011.

ADDRESSES: You may send comments by any of the following methods:

- *Federal eRulemaking Portal:* Go to *http://www.regulations.gov.* Follow the instructions for submitting comments.
- *Fax:* 202–493–2251.
- *Mail:* U.S. Department of Transportation, Docket Operations, M–30, West Building Ground Floor, Room W12–140, 1200 New Jersey Avenue, SE., Washington, DC 20590.
- *Hand Delivery:* U.S. Department of Transportation, Docket Operations, M–30, West Building Ground Floor, Room W12–140, 1200 New Jersey Avenue, SE., Washington, DC 20590, between 9 a.m. and 5 p.m., Monday through Friday, except Federal holidays.

For service information identified in this proposed AD, contact Boeing Commercial Airplanes, Attention: Data & Services Management, P.O. Box 3707, MC 2H–65, Seattle, Washington 98124–2207; telephone 206–544–5000, extension 1; fax 206–766–5680; e-mail *me.boecom@boeing.com;* Internet *https://www.myboeingfleet.com.* You may review copies of the referenced service information at the FAA, Transport Airplane Directorate, 1601 Lind Avenue, SW., Renton, Washington. For information on the availability of this material at the FAA, call 425–227–1221.

Examining the AD Docket

You may examine the AD docket on the Internet at *http://www.regulations.gov;* or in person at the Docket Management Facility between 9 a.m. and 5 p.m., Monday through Friday, except Federal holidays. The AD docket contains this proposed AD, the regulatory evaluation, any comments received, and other information. The street address for the Docket Office (telephone 800–647–5527) is in the **ADDRESSES** section. Comments will be available in the AD docket shortly after receipt.

FOR FURTHER INFORMATION CONTACT: Wayne Lockett, Aerospace Engineer, Airframe Branch, ANM–120S, FAA, Seattle Aircraft Certification Office, 1601 Lind Avenue, SW., Renton, Washington 98057–3356; telephone (425) 917–6447; fax (425) 917–6590; e-mail: *wayne.lockett@faa.gov.*

SUPPLEMENTARY INFORMATION:

Comments Invited

We invite you to send any written relevant data, views, or arguments about this proposed AD. Send your comments to an address listed under the **ADDRESSES** section. Include "Docket No. FAA–2011–0155; Directorate Identifier 2009–NM–141–AD" at the beginning of your comments. We specifically invite comments on the overall regulatory, economic, environmental, and energy aspects of this proposed AD. We will consider all comments received by the closing date and may amend this proposed AD because of those comments.

We will post all comments we receive, without change, to *http://www.regulations.gov,* including any personal information you provide. We will also post a report summarizing each substantive verbal contact we receive about this proposed AD.

Discussion

On August 26, 2004, we issued AD 2004–18–06, Amendment 39–13784 (69 FR 54206, September 8, 2004), for certain Model 737–200, –200C, –300, –400, and –500 series airplanes. That AD requires repetitive inspections to find fatigue cracking of certain upper and lower skin panels of the fuselage, and follow-on and corrective actions if necessary. That AD also includes a terminating action for the repetitive inspections of certain modified or repaired areas only. That AD resulted from reports indicating new findings of cracks were found along the edges of the chem-milled pockets in the upper skin at certain stringers. We issued that AD to find and fix fatigue cracking of the skin panels, which could result in sudden fracture and failure of the skin panels of the fuselage, and consequent rapid decompression of the airplane.

Actions Since Existing AD Was Issued

Since we issued AD 2004–18–06, we have received reports of new findings of vertical cracks in the fuselage skin along the chem-milled steps adjacent to the butt joints and at certain body stations on airplanes with between 45,100 flight cycles (65,200 flight hours) and 67,400 flight cycles (70,800 flight hours).

A decompression event connected to chem-milled steps occurred in July 2009 (after issuance of Boeing Alert Service Bulletin 737–53A1210, Revision 3, dated July 16, 2009) and resulted in re-evaluation of the inspection thresholds and repetitive intervals. The new data and analysis require the repetitive intervals be reduced from those currently specified in Boeing Alert Service Bulletin 737–53A1210, Revision 3, dated July 16, 2009. These new repetitive intervals are defined in the differences section of the NPRM.

Explanation of Relevant Service Information

We have reviewed Boeing Alert Service Bulletin 737–53A1210, Revision 2, dated March 3, 2009; and Boeing Alert Service Bulletin 737–53A1210, Revision 3, dated July 16, 2009. Boeing Alert Service Bulletin 737–53A1210, Revision 1, dated October 25, 2001, was referred to as the appropriate source of service information for accomplishing the actions in the existing AD.

Boeing Alert Service Bulletin 737–53A1210, Revision 2, describes procedures for, among other things,

repetitive external detailed and eddy current inspections for cracking of the fuselage skin along certain chem-milled lines, and corrective actions if necessary. The corrective actions include doing a time-limited repair or a permanent repair, as applicable. After installation of a time-limited repair, an external detailed inspection is done of the repaired area for cracks and loose or missing fasteners. For airplanes on which cracks are found, this service bulletin recommends contacting Boeing for repair instructions and repairing; and, for airplanes on which loose or damaged fasteners are found this service bulletin specifies replacing any damaged or loose fasteners. This service bulletin adds an optional preventive modification for Groups 3, 5, 6, and 8 at body station (BS) 500D through BS 520 on Model 737–300 airplanes, and BS 482B through BS 520, stringer 12, on Model 737–500 airplanes. This service bulletin also reduces the effectivity specified in Revision 1, and contains editorial changes.

Boeing Alert Service Bulletin 737–53A1210, Revision 3, clarifies certain work instructions. This service bulletin also specifies that more work is necessary for airplanes on which the actions in Boeing Alert Service Bulletin 737–53A1210, dated December 14, 2000; or Revision 1, dated October 25, 2001; were done. In addition, Revision 3 of this service bulletin adds the airplanes that were incorrectly removed from the effectivity in Revision 2 of this service bulletin, which were not identified until after Revision 2 of this service bulletin was issued. Therefore, the effectivity in Revision 3 of this service bulletin is the same as the effectivity in Revision 1 of this service bulletin.

Boeing Alert Service Bulletin 737–53A1210, Revision 3, specifies that the repetitive inspection interval is 4,500 flight cycles.

FAA's Determination and Requirements of the Proposed AD

We have evaluated all pertinent information and identified an unsafe condition that is likely to develop on other airplanes of the same type design. For this reason, we are proposing this AD, which would supersede AD 2004–18–06 and would retain certain requirements of the existing AD. This proposed AD would also require accomplishing the actions specified in the service information described previously, except as discussed under "Differences Between the Proposed AD and Service Information." This proposed AD also reduces the compliance time of 40,000 total flight cycles for doing certain actions in AD 2004–18–06; this proposed AD specifies a compliance time of 35,000 total flight cycles in paragraph (s) of this AD.

Differences Between the Proposed AD and Service Information

Boeing Alert Service Bulletin 737–53A1210, Revision 3, dated July 16, 2009, specifies to contact the manufacturer for disposition of certain repair conditions, but this proposed AD would require repairing those conditions in one of the following ways:

- In accordance with a method that we approve; or
- Using data that meet the certification basis of the airplane, and that have been approved by the Boeing Commercial Airplanes Organization Designation Authorization (ODA) that we have authorized to make those findings.

Boeing Alert Service Bulletin 737–53A1210, Revision 2, dated March 3, 2009, specifies that no airplanes were added or removed from the effectivity; however, the manufacturer has informed us that there were airplanes incorrectly removed in the "Identification by Customer, Customer Code, Group and Variable Number" section in Paragraph 1.A.1 of Revision 2 of this service bulletin. In light of the fact that Revision 3 of this service bulletin includes those airplanes in its effectivity, and includes all the actions specified in Revision 2 of this service bulletin, this proposed AD would require that the new actions be done in accordance with Revision 3 of this service bulletin.

Paragraph 1.E of Boeing Alert Service Bulletin 737–53A1210, Revision 3, specifies a repetitive inspection interval of 4,500 flight cycles; that interval is expected to be reduced when this service bulletin is revised. The manufacturer has informed us that it has re-evaluated the inspection interval because it would not address the identified unsafe condition soon enough to ensure an acceptable level of safety for the affected fleet. In light of this fact, we find that a repetitive inspection interval of 1,800 flight cycles, for the actions specified in Tables 1 through 5, represents an appropriate interval of time for affected airplanes to continue to operate without compromising safety.

Part 8 of the Accomplishment Instructions of Boeing Alert Service Bulletin 737–53A1210, Revision 3, specifies a post-repair inspection of the skin chem-milled crack repair at stringer 12; that inspection is not required by this proposed AD. The damage tolerance inspections specified in Table 7 of Boeing Alert Service Bulletin 737–53A1210, Revision 3, dated July 16, 2009, may be used in support of compliance with section 121.1109(c)(2) or 129.109(c)(2) of the Federal Aviation Regulations (14 CFR 121.1109(c)(2) or 14 CFR 129.109(c)(2)).

Explanation of Change to This Proposed AD

Boeing Commercial Airplanes has received an Organization Delegation Authority (ODA), which replaces their previous designation as a Designated Engineering Representative (DER). We have revised paragraphs (j) and (l)(2) of this proposed AD to delegate the authority to approve an alternative method of compliance for any repair required by this AD to the Boeing Commercial Airplanes ODA.

Change to Existing AD

This proposed AD would retain certain requirements of AD 2004–18–06. Since AD 2004–18–06 was issued, the AD format has been revised, and certain paragraphs have been rearranged. As a result, the corresponding paragraph identifiers have changed in this proposed AD, as listed in the following table:

REVISED PARAGRAPH IDENTIFIERS

Requirement in AD 2004–18–06	Corresponding requirement in this proposed AD
paragraph (a)	paragraph (g)
paragraph (b)	paragraph (h)
paragraph (c)	paragraph (i)
paragraph (d)	paragraph (j)
paragraph (e)	paragraph (k)
paragraph (f)	paragraph (l)
paragraph (g)	paragraph (m)
paragraph (h)	paragraph (n)
paragraph (i)	paragraph (o)

We have revised paragraph (m) of this proposed AD to specify that doing paragraph (b) or (c), as applicable, of AD 2003–14–06, Amendment 39–13225, after the effective date of this proposed AD does not terminate any of the actions required by paragraph (g) of this proposed AD. Recent reports of cracking have shown that a detailed inspection alone is not sufficient to find cracks in the fuselage skin. The cracking begins on the internal surface of the skin and grows outward, not becoming visible on the external surface until the crack is at least three inches in length. Actions accomplished before the effective date of this AD in accordance with AD 2003–14–06, which terminate certain requirements of paragraph (g) of this proposed AD, are reinstated with the new requirements specified in paragraph (p) of this proposed AD.

Costs of Compliance

There are about 903 airplanes of U.S. registry affected by AD 2004–18–06.

The inspections of the crown area that are required by AD 2004–18–06 take about 94 work hours per airplane to accomplish, at an average labor rate of $85 per work hour. Based on these figures, the estimated cost of the currently required inspections is $7,990 per airplane, per inspection cycle.

The inspections of the lower lobe area that are required by AD 2004–18–06 take about 96 work hours per airplane to accomplish, at an average labor rate of $85 per work hour. Based on these figures, the estimated cost of the currently required inspections is $8,160 per airplane, per inspection cycle.

Should an operator elect to install the preventive modification specified in AD 2004–18–06 it will take about 108 work hours per airplane to accomplish, at an average labor rate of $85 per work hour. Based on these figures, the estimated cost of the modification is $9,180 per airplane.

The new proposed inspections would affect about 701 airplanes of U.S. registry.

The new proposed inspections would take about 27 work hours per airplane, at an average labor rate of $85 per work hour. Based on these figures, the estimated cost of the new actions specified in this proposed AD for U.S. operators is $1,608,795, or $2,295 per airplane, per inspection cycle.

Authority for This Rulemaking

Title 49 of the United States Code specifies the FAA's authority to issue rules on aviation safety. Subtitle I, section 106, describes the authority of the FAA Administrator. Subtitle VII, Aviation Programs, describes in more detail the scope of the Agency's authority.

We are issuing this rulemaking under the authority described in subtitle VII, part A, subpart III, section 44701, "General requirements." Under that section, Congress charges the FAA with promoting safe flight of civil aircraft in air commerce by prescribing regulations for practices, methods, and procedures the Administrator finds necessary for safety in air commerce. This regulation is within the scope of that authority because it addresses an unsafe condition that is likely to exist or develop on products identified in this rulemaking action.

Regulatory Findings

We have determined that this proposed AD would not have federalism implications under Executive Order 13132. This proposed AD would not have a substantial direct effect on the States, on the relationship between the national Government and the States, or on the distribution of power and responsibilities among the various levels of government.

For the reasons discussed above, I certify that the proposed regulation:

(1) Is not a "significant regulatory action" under Executive Order 12866,

(2) Is not a "significant rule" under the DOT Regulatory Policies and Procedures (44 FR 11034, February 26, 1979),

(3) Will not affect intrastate aviation in Alaska, and

(4) Will not have a significant economic impact, positive or negative, on a substantial number of small entities under the criteria of the Regulatory Flexibility Act.

List of Subjects in 14 CFR Part 39

Air transportation, Aircraft, Aviation safety, Incorporation by reference, Safety.

The Proposed Amendment

Accordingly, under the authority delegated to me by the Administrator, the FAA proposes to amend 14 CFR part 39 as follows:

PART 39—AIRWORTHINESS DIRECTIVES

1. The authority citation for part 39 continues to read as follows:

Authority: 49 U.S.C. 106(g), 40113, 44701.

§ 39.13 [Amended]

2. The FAA amends § 39.13 by removing amendment 39–13784 (69 FR 54206, September 8, 2004) and adding the following new AD:

The Boeing Company: Docket No. FAA–2011–0155; Directorate Identifier 2009–NM–141–AD.

Comments Due Date

(a) The FAA must receive comments on this AD action by April 22, 2011.

Affected ADs

(b) This AD supersedes AD 2004–18–06, Amendment 39–13784. AD 2002–07–08, Amendment 39–12702; and AD 2003–14–06, Amendment 39–13225; affect this AD.

Applicability

(c) This AD applies to The Boeing Company Model 737–200, –200C, –300, –400, and –500 series airplanes, certificated in any category, as listed in Boeing Alert Service Bulletin 737–53A1210, Revision 3, dated July 16, 2009.

Subject

(d) Air Transport Association (ATA) of America Code 53: Fuselage.

Unsafe Condition

(e) This AD results from new findings of vertical cracks along chem-milled steps adjacent to the butt joints. The Federal Aviation Administration is issuing this AD to detect and correct fatigue cracking of the skin panels, which could result in sudden fracture and failure of the skin panels of the fuselage, and consequent rapid decompression of the airplane.

Compliance

(f) You are responsible for having the actions required by this AD performed within the compliance times specified, unless the actions have already been done.

Restatement of Certain Requirements of AD 2004–18–06, Amendment 39–13784

External Detailed and Eddy Current Inspections

(g) For Groups 1 through 5 airplanes identified in Boeing Alert Service Bulletin 737–53A1210, Revision 1, dated October 25, 2001: Before the accumulation of 35,000 total flight cycles, or within 4,500 flight cycles after October 13, 2004 (the effective date of AD 2004–18–06), whichever is later, do external detailed and eddy current inspections of the crown area and other known areas of fuselage skin cracking, per Part 1 and Figure 1 of the Work Instructions of Boeing Alert Service Bulletin 737–53A1210, Revision 1, dated October 25, 2001; or in accordance with Part 1 of the Accomplishment Instructions of Boeing Alert Service Bulletin 737–53A1210, Revision 3, dated July 16, 2009. As of the effective date of this AD, use only Boeing Alert Service Bulletin 737–53A1210, Revision 3, dated July 16, 2009. Repeat the external detailed and eddy current inspections at intervals not to exceed 4,500 flight cycles until paragraph (i), (j)(1)(ii), (k), (l), or (m) of this AD has been done, as applicable. Although paragraph 1.D. of Boeing Alert Service Bulletin 737–53A1210, Revision 1, dated October 25, 2001, references a reporting requirement, such reporting is not required by this AD. Accomplishing the actions required by paragraph (p) or (q) of this AD ends the repetitive requirements in this paragraph.

Note 1: For the purposes of this AD, a detailed inspection is defined as: "An intensive visual examination of a specific structural area, system, installation, or assembly to detect damage, failure, or irregularity. Available lighting is normally supplemented with a direct source of good lighting at intensity deemed appropriate by the inspector. Inspection aids such as mirror, magnifying lenses, *etc.,* may be used. Surface cleaning and elaborate access procedures may be required."

(h) For all airplanes identified in Boeing Alert Service Bulletin 737–53A1210, Revision 1, dated October 25, 2001, do an external detailed inspection of the lower lobe area and section 41 of the fuselage for cracking, per Part 2 and Figure 2 of the Work Instructions of Boeing Alert Service Bulletin 737–53A1210, Revision 1, dated October 25, 2001; or in accordance with Part 4 of the Accomplishment Instructions of Boeing Alert Service Bulletin 737–53A1210, Revision 3,

dated July 16, 2009. As of the effective date of this AD, use only Boeing Alert Service Bulletin 737–53A1210, Revision 3, dated July 16, 2009. At the earlier of the times specified in paragraphs (h)(1) and (h)(2) of this AD, do the inspection specified in this paragraph and repeat the inspection thereafter at intervals not to exceed 4,500 flight cycles until paragraph (j)(2) or (k) of this AD has been done, as applicable. Accomplishing the actions required by paragraph (s) of this AD ends the requirements in this paragraph.

(1) Within 9,000 flight cycles after doing the most recent internal detailed inspection.

(2) Within 4,500 flight cycles after October 13, 2004, or before the accumulation of 40,000 total flight cycles, whichever occurs later.

Preventive Modification

(i) For Groups 3 and 5 airplanes identified in Boeing Alert Service Bulletin 737–53A1210, Revision 1, dated October 25, 2001: If no cracking is found during any inspection required by paragraph (g) of this AD, doing the preventive modification of the chem-milled pockets in the upper skin as specified in Part 5 of the Work Instructions of Boeing Alert Service Bulletin 737–53A1210, Revision 1, dated October 25, 2001; or as specified in Part 7 of the Work Instructions of Boeing Alert Service Bulletin 737–53A1210, Revision 3, dated July 16, 2009, except as required by paragraph (x) of this AD; ends the repetitive external detailed and eddy current inspections required by paragraph (g) of this AD for the modified area only. As of the effective date of this AD, use only Boeing Alert Service Bulletin 737–53A1210, Revision 3, dated July 16, 2009.

Corrective Actions

(j) If any cracking is found during any inspection required by paragraph (g), (h), (p), (q), or (s) of this AD, before further flight, do the actions specified in paragraphs (j)(1) and (j)(2) of this AD, as applicable, in accordance with the Work Instructions of Boeing Alert Service Bulletin 737–53A1210, Revision 1, dated October 25, 2001; or Revision 3, dated July 16, 2009. As of the effective date of this AD, use only Boeing Alert Service Bulletin 737–53A1210, Revision 3, dated July 16, 2009. Where Boeing Alert Service Bulletin 737–53A1210, Revision 1, dated October 25, 2001; or Revision 3, dated July 16, 2009; specify to contact Boeing for repair instructions, before further flight, repair per a method approved by the Manager, Seattle Aircraft Certification Office (ACO), FAA; or per data meeting the type certification basis of the airplane if it is approved by the Boeing Commercial Airplanes Organization Designation Authorization (ODA) or any other person authorized by the Manager, Seattle ACO to make those findings. For a repair method to be approved the repair must meet the certification basis of the airplane and the approval must specifically refer to this AD.

(1) Except as provided by paragraph (k) of this AD, for cracking of the crown area, do the repair specified in either paragraph (j)(1)(i) or (j)(1)(ii) of this AD.

(i) Do a time-limited repair per Part 4 of the Work Instructions of Boeing Alert Service Bulletin 737–53A1210, Revision 1, dated October 25, 2001; or in accordance with Part 6 of the Work Instructions of Boeing Alert Service Bulletin 737–53A1210, Revision 3, dated July 16, 2009, except as required by paragraph (x) of this AD, then do the actions required by paragraph (l) of this AD at the times specified in that paragraph.

(ii) Do a permanent repair per Part 3 of the Work Instructions of Boeing Alert Service Bulletin 737–53A1210, Revision 1, dated October 25, 2001; or in accordance with Part 5 of the Work Instructions of Boeing Alert Service Bulletin 737–53A1210, Revision 3, dated July 16, 2009. Installation of a permanent repair ends the repetitive inspections required by paragraph (g) of this AD for the repaired area only. Installation of the lap joint repair specified in paragraph (g) of AD 2002–07–08, Amendment 39–12702, is considered acceptable for compliance with the corresponding permanent repair specified in this paragraph for the repaired areas only.

(2) Except as provided by paragraph (k) of this AD, for cracking of the lower lobe area and Section 41, repair per Part 2 of the Work Instructions of Boeing Alert Service Bulletin 737–53A1210, Revision 1, dated October 25, 2001; or in accordance with paragraph (j)(2)(i) or (j)(2)(ii) of this AD. Accomplishment of this repair ends the repetitive inspections required by paragraph (h) of this AD for the repaired area only. As of the effective date of this, do the repair specified in paragraph (j)(2)(i) or (j)(2)(ii) of this AD.

(i) Do a time-limited repair in accordance with Part 6 of the Work Instructions of Boeing Alert Service Bulletin 737–53A1210, Revision 3, dated July 16, 2009, except as required by paragraph (x) of this AD, then do the actions required by paragraph (l) of this AD at the times specified in that paragraph.

(ii) Do a permanent repair in accordance with Part 5 of the Accomplishment Instructions of Boeing Alert Service Bulletin 737–53A1210, Revision 3, dated July 16, 2009.

Optional Repair Method

(k) For cracking in any area specified in paragraphs (j)(1) and (j)(2) of this AD within the limitations of the applicable structural repair manual (SRM) specified in table 1 of this AD, repair any cracks per the applicable SRM specified in table 1 of this AD. Accomplishment of the applicable repair terminates the repetitive inspections required by paragraphs (g) and (h) of this AD for the repaired area only.

TABLE 1—SRM REFERENCES

Model	Subject/figure	Revision	Date	SRM
737–100, –200 series airplanes	53–30–3, Figure 48	102	September 10, 2010	Boeing 737–100/–200 SRM, D6–15565.
737–300 series airplanes	53–00–01, Figure 229	92	November 10, 2010	Boeing 737–300 SRM D6–37635.
737–400 series airplanes	53–00–01, Figure 231	75	November 10, 2010	Boeing 737–400 SRM, D6–38246.
737–500 series airplanes	53–00–01, Figure 229	70	November 10, 2010	Boeing 737–500 SRM, D6–38441.

Follow-on and Corrective Actions

(l) If a time-limited repair is done, as specified in paragraph (j)(1)(i) or (j)(2)(i) of this AD: Do the actions specified in paragraphs (l)(1), (l)(2), and (l)(3) of this AD, at the times specified in paragraphs (l)(1), (l)(2), and (l)(3) of this AD, per the Work Instructions of Boeing Alert Service Bulletin 737–53A1210, Revision 1, dated October 25, 2001; or Boeing Alert Service Bulletin 737–53A1210, Revision 3, dated July 16, 2009.

(1) Within 3,000 flight cycles after doing the repair: Do the actions specified in paragraph (l)(1)(i) or (l)(1)(ii) of this AD. Then repeat the applicable inspection specified in paragraph (l)(1)(i) or (l)(1)(ii) of this AD at intervals not to exceed 3,000 flight cycles until permanent rivets are installed in the repaired area, which ends the repetitive inspections for this paragraph. As of the effective date of this AD, do only the inspections specified in paragraph (l)(1)(ii) of this AD.

(i) For repairs done before the effective date of this AD: Do a detailed inspection of the repaired area for loose fasteners per Part 4 of the Work Instructions of Boeing Alert Service Bulletin 737–53A1210, Revision 1, dated October 25, 2001, or do the actions specified in paragraph (l)(1)(ii) of this AD. If any loose fastener is found, before further flight, replace with a new fastener per Boeing Alert Service Bulletin 737–53A1210, Revision 1, dated October 25, 2001.

(ii) For repairs done after the effective date of this AD: Do a detailed inspection of the repaired area for loose, damaged, and missing fasteners in accordance with Part 6 of the Accomplishment Instructions of Boeing Alert Service Bulletin 737–53A1210, Revision 3, dated July 16, 2009. If any loose, missing, or damaged fastener is found, before further flight, replace with a new fastener in accordance with Boeing Alert Service Bulletin 737–53A1210, Revision 3, dated July 16, 2009.

(2) At the applicable time specified in paragraph (l)(2)(i) and (l)(2)(ii) of this AD: Do inspections of the repaired area for cracking per Part 4 of the Work Instructions of Boeing Alert Service Bulletin 737–53A1210, Revision 1, dated October 25, 2001; or in

accordance with Part 6 of the Work Instructions of Boeing Alert Service Bulletin 737–53A1210, Revision 3, dated July 16, 2009. If any cracking is found, before further flight, repair per a method approved by the Manager, Seattle ACO, or per data meeting the type certification basis of the airplane if it is approved by the Boeing Commercial Airplanes ODA or any other person authorized by the Manager, Seattle ACO to make those findings. For a repair method to be approved the repair must meet the certification basis of the airplane and the approval must specifically refer to this AD.

(i) For repairs done before the effective date of this AD: Within 4,000 flight cycles after doing the repair, do the inspections.

(ii) For repairs done on or after the effective date of this AD: Within 3,000 flight cycles after doing the repair, do the inspections.

(3) At the earlier of the times specified in paragraphs (l)(3)(i) and (l)(3)(ii) of this AD: Make the repair permanent per Part 4 and Figure 20 of the Work Instructions of Boeing Alert Service Bulletin 737–53A1210, Revision 1, dated October 25, 2001, or do the permanent repair in accordance with Part 5 of the Work Instructions of Boeing Alert Service Bulletin 737–53A1210, Revision 3, dated July 16, 2009, which ends the repetitive inspections for the repaired area only. As of the effective date of this AD, make the repair permanent in accordance with Boeing Alert Service Bulletin 737–53A1210, Revision 3, dated July 16, 2009.

(i) Within 10,000 flight cycles after doing the repair in accordance with Boeing Alert Service Bulletin 737–53A1210, Revision 1, dated October 25, 2001.

(ii) At the later of the times specified in paragraphs (l)(3)(ii)(A) and (l)(3)(ii)(B) of this AD.

(A) Within 6,000 flight cycles after doing the repair.

(B) Within 1,000 flight cycles after the effective date of this AD.

Optional Terminating Action for Repetitive Eddy Current Inspections if Done Before the Effective Date of This AD

(m) Accomplishment of paragraph (b) or (c), as applicable, of AD 2003–14–06, Amendment 39–13225, before the effective date of this AD ends the repetitive eddy current inspections required by paragraph (g) of this AD for that skin panel only; however, the repetitive external detailed inspections required by paragraph (g) of this AD are still required for all areas. As of the effective date of this AD, accomplishing paragraph (b) or (c), as applicable, of AD 2003–14–06, Amendment 39–13225, does not end the repetitive eddy current inspections required by paragraph (g) of this AD.

Credit for Actions Done per Previous Service Bulletin

(n) Inspections, repairs, and preventive modifications done before October 13, 2004, in accordance with Boeing Alert Service Bulletin 737–53A1210, dated December 14, 2000, are acceptable for compliance with the corresponding actions required by paragraphs (g), (h), (i), (j), (k), and (l) of this AD.

Exception to Service Bulletin Procedures

(o) For airplanes subject to the requirements of paragraphs (g), (h), (p), and (q) of this AD: Inspections are not required in areas that are spanned by an FAA-approved repair that has a minimum of 3 rows of fasteners above and below the chem-milled step. If an external doubler covers the chem-milled step, but does not span it by a minimum of 3 rows of fasteners above and below, in lieu of requesting approval for an alternative method of compliance (AMOC), one option to comply with the inspection requirement of paragraphs (g) and (h) of this AD is to inspect all chem-milled steps covered by the repair using internal nondestructive test (NDT) methods in accordance with Part 6 of the Boeing 737 Non-Destructive Test NDT Manual. As of the effective date of this AD, inspect in accordance with Boeing Alert Service Bulletin 737–53A1210, Revision 3, dated July 16, 2009.

New Requirements of This AD

Repetitive Inspections and Corrective Actions if Necessary

(p) For Groups 1 through 5 and 9 through 21 airplanes identified in Boeing Alert Service Bulletin 737–53A1210, Revision 3, dated July 16, 2009, on which the inspections required by paragraph (g) of this AD have been done before the effective date of this AD: At the applicable time specified in paragraph (p)(1) or (p)(2) of this AD, do external detailed and eddy current inspections of the crown area and other known areas of fuselage skin cracking in accordance with Part 1 of the Accomplishment Instructions of Boeing Alert Service Bulletin 737–53A1210, Revision 3, dated July 16, 2009; except as provided by paragraph (o) of this AD. Repeat the external detailed and eddy current inspections thereafter at intervals not to exceed 1,800 flight cycles. Accomplishing the inspections required by this paragraph ends the repetitive inspections required by paragraph (g) of this AD. Before further flight, do all applicable corrective actions as specified in paragraph (j) of this AD.

(1) For airplanes on which any action specified in paragraph (i), (j)(1)(ii), (k), (l), or (m) of this AD has been done: Within 1,800 flight cycles after the effective date of this AD.

(2) For airplanes on which actions specified in paragraphs (i), (j)(1)(ii), (k), (l), and (m) of this AD have not been done: Within 4,500 flight cycles after doing the most recent inspection required by paragraph (g) of this AD, or within 1,800 flight cycles after the effective date of this AD, whichever is later.

(q) For Groups 1 through 5 and 9 through 21 airplanes identified in Boeing Alert Service Bulletin 737–53A1210, Revision 3, dated July 16, 2009; on which the inspections required by paragraph (g) of this AD have not been done before the effective date of this AD: Before the accumulation of 35,000 total flight cycles, or within 1,800 flight cycles after the effective date of this AD, whichever is later, do external detailed and eddy current inspections of the crown area and other known areas of fuselage skin cracking in accordance with Part 1 of the Accomplishment Instructions of Boeing Alert Service Bulletin 737–53A1210, Revision 3, dated July 16, 2009. Repeat the external detailed and eddy current inspections thereafter at intervals not to exceed 1,800 flight cycles. Before further flight, do all applicable corrective actions as specified in paragraph (j) of this AD.

(r) For Group 1 through 5 and 9 through 21 airplanes identified in Boeing Alert Service Bulletin 737–53A1210, Revision 3, dated July 16, 2009: At the later of the times specified in paragraphs (r)(1) and (r)(2) of this AD, do external detailed and eddy current inspections for vertical cracks in the fuselage skin along the chem-milled steps of the butt joints, in accordance with Part 3 of the Accomplishment Instructions of Boeing Alert Service Bulletin 737–53A1210, Revision 3, dated July 16, 2009. Repeat the inspections thereafter at intervals not to exceed 1,800 flight cycles or 1,800 flight hours, whichever occurs first. If any cracking is found, before further flight, repair in accordance with Part 5 of the Accomplishment Instructions of Boeing Alert Service Bulletin 737–53A1210, Revision 3, dated July 16, 2009. Doing the repair terminates the repetitive inspections specified in this paragraph for the repaired area only.

(1) Before the accumulation of 55,000 total flight cycles or 55,000 total flight hours, whichever occurs first.

(2) Within 1,800 flight cycles or 1,800 flight hours after the effective date of this AD, whichever occurs first.

(s) For Groups 1 through 21 airplanes identified in Boeing Alert Service Bulletin 737–53A1210, Revision 3, dated July 16, 2009: Before the accumulation of 35,000 total flight cycles or within 4,500 flight cycles after the effective date of this AD, whichever is later, do external detailed and eddy current inspections for horizontal cracks along the chem-milled lines of the fuselage skin of the lower lobe area and section 41, in accordance with Part 4 of the Accomplishment Instructions of Boeing Alert Service Bulletin 737–53A1210, Revision 3, dated July 16, 2009; except as required by paragraph (u) of this AD. Repeat the inspections thereafter at intervals not to exceed 4,500 flight cycles. Accomplishing the inspections required by this paragraph ends the repetitive inspections required by paragraph (h) of this AD. Before further flight, do all applicable corrective actions as specified in paragraph (j) of this AD.

(t) For Groups 4, 11, and 16 airplanes identified in Boeing Alert Service Bulletin 737–53A1210, Revision 3, dated July 16, 2009: Before the accumulation of 25,000 total flight cycles or within 4,500 flight cycles after the effective date of this AD, whichever is later, do external detailed and eddy current inspections for horizontal cracks along the chem-milled lines of the fuselage skin of the fuselage window belt area in accordance with Part 2 of the Accomplishment Instructions of Boeing Alert Service Bulletin 737–53A1210, Revision 3, dated July 16, 2009. Repeat the inspections thereafter at intervals not to exceed 4,500 flight cycles. If any cracking is found, before further flight, repair using a

method approved in accordance with paragraph (y) of this AD.

(u) For Groups 3, 5, 9, 10, 12, 14, 15, 17, 18, 19, 20, and 21 airplanes identified in Boeing Alert Service Bulletin 737–53A1210, Revision 3, dated July 16, 2009: Do the actions specified in paragraph (u)(1) or (u)(2) of this AD, as applicable.

(1) For airplanes on which the inspections required by paragraph (g) of this AD have been done before the effective date of this AD: Within 4,500 flight cycles after doing the most recent inspection required by paragraph (g) of this AD, do external detailed and eddy current inspections for horizontal cracks along the chem-milled lines of the fuselage skin of the fuselage window belt area in accordance with Part 2 of the Accomplishment Instructions of Boeing Alert Service Bulletin 737–53A1210, Revision 3, dated July 16, 2009. Repeat the inspections thereafter at intervals not to exceed 4,500 flight cycles. If any cracking is found, before further flight, repair in accordance with Part 8 of Boeing Alert Service Bulletin 737–53A1210, Revision 3, dated July 16, 2009, except as required by paragraph (x) of this AD.

(2) For airplanes on which the inspections required by paragraph (g) of this AD have not been done before the effective date of this AD: Before the accumulation of 25,000 total flight cycles or within 4,500 flight cycles after the effective date of this AD, whichever is later, do external detailed and eddy current inspections for horizontal cracks along the chem-milled lines of the fuselage skin of the fuselage window belt area in accordance with Part 2 of the Accomplishment Instructions of Boeing Alert Service Bulletin 737–53A1210, Revision 3, dated July 16, 2009. Repeat the inspections thereafter at intervals not to exceed 4,500 flight cycles. If any cracking is found, before further flight, repair in accordance with Part 8 of Boeing Alert Service Bulletin 737–53A1210, Revision 3, dated July 16, 2009, except as required by paragraph (x) of this AD.

Repair and Preventive Modification

(v) For airplanes on which cracking is found during any inspection required by paragraph (p), (q), (r), or (s) of this AD, as applicable, doing the repair of the chem-milled area in the skin, as specified in Part 5 or Part 6 of the Accomplishment Instructions of Boeing Alert Service Bulletin 737–53A1210, Revision 3, dated July 16, 2009, ends the repetitive external detailed and eddy current inspections required by paragraph (p), (q), (r), or (s) of this AD, as applicable, for the repaired area only.

Note 2: Part 8 of the Accomplishment Instructions of Boeing Alert Service Bulletin 737–53A1210, Revision 3, dated July 16, 2009, specifies a post-repair inspection of the skin chem-milled crack repair at stringer 12; that inspection is not required by this AD. The damage tolerance inspections specified in Table 7 of Boeing Alert Service Bulletin 737–53A1210, Revision 3, dated July 16, 2009, may be used in support of compliance with section 121.1109(c)(2) or 129.109(c)(2) of the Code of Federal Regulations (14 CFR 121.1109(c)(2) or 14 CFR 129.109(c)(2)).

(w) For airplanes on which no cracking is found during any inspection required by paragraph (p) or (q) of this AD, as applicable, doing the preventive modification of the chem-milled areas in the skin at stringer S–12, as specified in Part 7 of the Accomplishment Instructions of Boeing Alert Service Bulletin 737–53A1210, Revision 3, dated July 16, 2009, except as required by paragraph (x) of this AD, ends the repetitive external detailed and eddy current inspections required by paragraph (p) or (q) of this AD, as applicable, for the modified area only.

Exception to Boeing Alert Service Bulletin 737–53A1210, Revision 3

(x) Where Boeing Alert Service Bulletin 737–53A1210, Revision 3, dated July 16, 2009, specifies to contact Boeing for repair instructions, before further flight, repair using a method approved in accordance with paragraph (y) of this AD.

Alternative Methods of Compliance (AMOCs)

(y)(1) The Manager, Seattle Aircraft Certification Office (ACO), FAA, has the authority to approve AMOCs for this AD, if requested using the procedures found in 14 CFR 39.19. In accordance with 14 CFR 39.19, send your request to your principal inspector or local Flight Standards District Office, as appropriate. If sending information directly to the manager of the ACO, send it to the attention of the person identified in the Related Information section of this AD. Information may be e-mailed to: *9-ANM-Seattle-ACO-AMOC-Requests@faa.gov.*

(2) Before using any approved AMOC, notify your appropriate principal inspector, or lacking a principal inspector, the manager of the local flight standards district office/certificate holding district office.

(3) An AMOC that provides an acceptable level of safety may be used for any repair required by this AD if it is approved by the Boeing Commercial Airplanes ODA that has been authorized by the Manager, Seattle ACO to make those findings. For a repair method to be approved, the repair must meet the certification basis of the airplane, and the approval must specifically refer to this AD.

(4) AMOCs approved previously in accordance with AD 2004–18–06, Amendment 39–13784, are approved as AMOCs for the corresponding provisions of this AD.

Related Information

(z) For more information about this AD, contact Wayne Lockett, Aerospace Engineer, Airframe Branch, ANM–120S, FAA, Seattle Aircraft Certification Office, 1601 Lind Avenue, SW., Renton, Washington 98057–3356; telephone (425) 917–6447; fax (425) 917–6590; e-mail: *wayne.lockett@faa.gov.*

Issued in Renton, Washington on February 22, 2011.

Kalene C. Yanamura,

Acting Manager, Transport Airplane Directorate, Aircraft Certification Service.

[FR Doc. 2011–5159 Filed 3–7–11; 8:45 am]

BILLING CODE 4910–13–P

DEPARTMENT OF TRANSPORTATION

Federal Aviation Administration

14 CFR Part 39

[Docket No. FAA–2011–0152; Directorate Identifier 2010–NM–079–AD]

RIN 2120–AA64

Airworthiness Directives; Dassault-Aviation Model FALCON 7X Airplanes

AGENCY: Federal Aviation Administration (FAA), DOT.

ACTION: Notice of proposed rulemaking (NPRM).

SUMMARY: We propose to adopt a new airworthiness directive (AD) for the products listed above. This proposed AD results from mandatory continuing airworthiness information (MCAI) originated by an aviation authority of another country to identify and correct an unsafe condition on an aviation product. The MCAI describes the unsafe condition as:

On some Falcon 7X aeroplanes, it has been determined potential low clearance between electrical wiring or hydraulic pipe and nearby structure. Although no in service incident has been reported, there is no certainty that the minimum clearances would be maintained over time. In the worst case, interference or contact with structure might occur and lead to electrical short circuits or fluid leakage, potentially resulting in loss of several functions essential for safe flight.

* * * * *

The proposed AD would require actions that are intended to address the unsafe condition described in the MCAI.

DATES: We must receive comments on this proposed AD by April 22, 2011.

ADDRESSES: You may send comments by any of the following methods:

- *Federal eRulemaking Portal:* Go to http://www.regulations.gov. Follow the instructions for submitting comments.
- *Fax:* (202) 493–2251.
- *Mail:* U.S. Department of Transportation, Docket Operations, M–30, West Building Ground Floor, Room W12–140, 1200 New Jersey Avenue SE., Washington, DC 20590.
- *Hand Delivery:* U.S. Department of Transportation, Docket Operations, M–30, West Building Ground Floor, Room W12–40, 1200 New Jersey Avenue SE., Washington, DC, between 9 a.m. and 5 p.m., Monday through Friday, except Federal holidays.

For service information identified in this proposed AD, contact Dassault Falcon Jet, P.O. Box 2000, South Hackensack, New Jersey 07606; telephone 201–440–6700; Internet *http://www.dassaultfalcon.com.* You

may review copies of the referenced service information at the FAA, Transport Airplane Directorate, 1601 Lind Avenue, SW., Renton, Washington. For information on the availability of this material at the FAA, call 425–227–1221.

Examining the AD Docket

You may examine the AD docket on the Internet at *http://www.regulations.gov;* or in person at the Docket Operations office between 9 a.m. and 5 p.m., Monday through Friday, except Federal holidays. The AD docket contains this proposed AD, the regulatory evaluation, any comments received, and other information. The street address for the Docket Operations office (telephone (800) 647–5527) is in the **ADDRESSES** section. Comments will be available in the AD docket shortly after receipt.

FOR FURTHER INFORMATION CONTACT: Tom Rodriguez, Aerospace Engineer, International Branch, ANM–116, Transport Airplane Directorate, FAA, 1601 Lind Avenue, SW., Renton, Washington 98057–3356; telephone (425) 227–1137; fax (425) 227–1149.

SUPPLEMENTARY INFORMATION:

Comments Invited

We invite you to send any written relevant data, views, or arguments about this proposed AD. Send your comments to an address listed under the **ADDRESSES** section. Include "Docket No. FAA–2011–0152; Directorate Identifier 2010–NM–079–AD" at the beginning of your comments. We specifically invite comments on the overall regulatory, economic, environmental, and energy aspects of this proposed AD. We will consider all comments received by the closing date and may amend this proposed AD based on those comments.

We will post all comments we receive, without change, to *http://www.regulations.gov*, including any personal information you provide. We will also post a report summarizing each substantive verbal contact we receive about this proposed AD.

Discussion

The European Aviation Safety Agency (EASA), which is the Technical Agent for the Member States of the European Community, has issued EASA Airworthiness Directive 2010–0029R1, dated November 25, 2010 (referred to after this as "the MCAI"), to correct an unsafe condition for the specified products. The MCAI states:

> On some Falcon 7X aeroplanes, it has been determined potential low clearance between electrical wiring or hydraulic pipe and nearby structure.
>
> Although no in service incident has been reported, there is no certainty that the minimum clearances would be maintained over time. In the worst case, interference or contact with structure might occur and lead to electrical short circuits or fluid leakage, potentially resulting in loss of several functions essential for safe flight.
>
> Dassault Aviation has developed two Service Bulletins (SB) that provide corrective actions to ensure the minimum required clearance, as well as adequate protection between hydraulic pipe (SB n° 0 92) and electrical wiring (SB n° 006) and the aeroplane structure.
>
> This AD requires the implementation of both SBs on the affected aeroplanes.
>
> Since issuance of EASA AD 2010–0029, Dassault Aviation has developed modifications M1036 and M1037. M1036 is equivalent to M1007 while M1037 is equivalent to M1020. These modifications are embodied during production on new aeroplanes.
>
> This [EASA] AD has been revised to exclude from the AD applicability the aeroplanes on which those modifications are embodied.

Required actions include general visual inspections for damage of wiring bundles and feeders. Damage includes, but is not limited to: signs of overheat, discoloration, or damaged and cut strands on the cables and insulating sleeves. Corrective actions for damage of wiring bundles and feeders include repairing damage. Other required actions include modifying the applicable wiring and layout, a general visual inspection for absence of marks of the rear tank wall at the contact area, installing a protective plate on the rear tank wall, and installing a hydraulic pipe if necessary. If contact marks are found, required actions include an eddy current inspection or a penetrant inspection for cracks, and repair if necessary. You may obtain further information by examining the MCAI in the AD docket.

Relevant Service Information

Dassault has issued Mandatory Service Bulletin 7X–006, Revision 1, dated March 3, 2010; and Mandatory Service Bulletin 7X–092, Revision 1, dated January 4, 2010. The actions described in this service information are intended to correct the unsafe condition identified in the MCAI.

FAA's Determination and Requirements of This Proposed AD

This product has been approved by the aviation authority of another country, and is approved for operation in the United States. Pursuant to our bilateral agreement with the State of Design Authority, we have been notified of the unsafe condition described in the MCAI and service information referenced above. We are proposing this AD because we evaluated all pertinent information and determined an unsafe condition exists and is likely to exist or develop on other products of the same type design.

Differences Between This AD and the MCAI or Service Information

We have reviewed the MCAI and related service information and, in general, agree with their substance. But we might have found it necessary to use different words from those in the MCAI to ensure the AD is clear for U.S. operators and is enforceable. In making these changes, we do not intend to differ substantively from the information provided in the MCAI and related service information.

We might also have proposed different actions in this AD from those in the MCAI in order to follow FAA policies. Any such differences are highlighted in a Note within the proposed AD.

Costs of Compliance

Based on the service information, we estimate that this proposed AD would affect about 21 products of U.S. registry. We also estimate that it would take about 65 work-hours per product to comply with the basic requirements of this proposed AD. The average labor rate is $85 per work-hour. Required parts would cost about $0 per product. Where the service information lists required parts costs that are covered under warranty, we have assumed that there will be no charge for these costs. As we do not control warranty coverage for affected parties, some parties may incur costs higher than estimated here. Based on these figures, we estimate the cost of the proposed AD on U.S. operators to be $116,025, or $5,525 per product.

Authority for This Rulemaking

Title 49 of the United States Code specifies the FAA's authority to issue rules on aviation safety. Subtitle I, section 106, describes the authority of the FAA Administrator. "Subtitle VII: Aviation Programs," describes in more detail the scope of the Agency's authority.

We are issuing this rulemaking under the authority described in "Subtitle VII, Part A, Subpart III, Section 44701: General requirements." Under that section, Congress charges the FAA with promoting safe flight of civil aircraft in air commerce by prescribing regulations for practices, methods, and procedures the Administrator finds necessary for safety in air commerce. This regulation is within the scope of that authority

because it addresses an unsafe condition that is likely to exist or develop on products identified in this rulemaking action.

Regulatory Findings

We determined that this proposed AD would not have federalism implications under Executive Order 13132. This proposed AD would not have a substantial direct effect on the States, on the relationship between the national Government and the States, or on the distribution of power and responsibilities among the various levels of government.

For the reasons discussed above, I certify this proposed regulation:

1. Is not a "significant regulatory action" under Executive Order 12866;

2. Is not a "significant rule" under the DOT Regulatory Policies and Procedures (44 FR 11034, February 26, 1979); and

3. Will not have a significant economic impact, positive or negative, on a substantial number of small entities under the criteria of the Regulatory Flexibility Act.

We prepared a regulatory evaluation of the estimated costs to comply with this proposed AD and placed it in the AD docket.

List of Subjects in 14 CFR Part 39

Air transportation, Aircraft, Aviation safety, Incorporation by reference, Safety.

The Proposed Amendment

Accordingly, under the authority delegated to me by the Administrator, the FAA proposes to amend 14 CFR part 39 as follows:

PART 39—AIRWORTHINESS DIRECTIVES

1. The authority citation for part 39 continues to read as follows:

Authority: 49 U.S.C. 106(g), 40113, 44701.

§ 39.13 [Amended]

2. The FAA amends § 39.13 by adding the following new AD:

Dassault-Aviation: Docket No. FAA–2011–0152; Directorate Identifier 2010–NM–079–AD.

Comments Due Date

(a) We must receive comments by April 22, 2011.

Affected ADs

(b) None.

Applicability

(c) This AD applies to Dassault-Aviation Model FALCON 7X airplanes, certificated in any category; having serial numbers 2 through 22 inclusive, 24 through 26 inclusive, 29, 30, 32 and subsequent; except those on which modifications M964, M937, M976, M1007 or M1036, M1020 or M1037, and M1022 have all been implemented.

Subject

(d) Air Transport Association (ATA) of America Code 20: Air Frame Wiring; and ATA Code 29: Hydraulic Power.

Reason

(e) The mandatory continuing airworthiness information (MCAI) states:

On some Falcon 7X aeroplanes, it has been determined potential low clearance between electrical wiring or hydraulic pipe and nearby structure.

Although no in service incident has been reported, there is no certainty that the minimum clearances would be maintained over time. In the worst case, interference or contact with structure might occur and lead to electrical short circuits or fluid leakage, potentially resulting in loss of several functions essential for safe flight.

* * * * *

Compliance

(f) You are responsible for having the actions required by this AD performed within the compliance times specified, unless the actions have already been done.

Inspections and Modification of Wiring and Rear Fuel Tank Panel

(g) Within 10 months or 650 flight hours after the effective date of this AD, whichever occurs first, do the actions specified in paragraphs (g)(1), (g)(2), and (g)(3) of this AD.

(1) Do a general visual inspection for damage of wiring bundles and feeders, in accordance with the Accomplishment Instructions of Dassault Mandatory Service Bulletin 7X–006, Revision 1, dated March 3, 2010. If any damage is found, before further flight, repair, in accordance with Dassault Mandatory Service Bulletin 7X–006, Revision 1, dated March 3, 2010.

(2) Modify the applicable wiring and layout, in accordance with the Accomplishment Instructions of Dassault Mandatory Service Bulletin 7X–006, Revision 1, dated March 3, 2010.

(3) Do a general visual inspection for absence of marks on the rear tank wall at the contact area, in accordance with the Accomplishment Instructions of Dassault Mandatory Service Bulletin 7X–092, Revision 1, dated January 4, 2010.

(i) If no contact marks are found during the inspection required by paragraph (g)(3) of this AD, before further flight, modify the protective plate, and install a hydraulic pipe as applicable, in accordance with the Accomplishment Instructions of Dassault Mandatory Service Bulletin 7X–092, Revision 1, dated January 4, 2010.

(ii) If any contact marks are found during the inspection required by paragraph (g)(3) of this AD, before further flight, do either an eddy current inspection for cracks or a penetrant inspection for cracks, in accordance with the Accomplishment Instructions of Dassault Mandatory Service Bulletin 7X–092, Revision 1, dated January 4, 2010.

(A) If no crack is detected during any inspection required by paragraph (g)(3)(ii) of this AD, before further flight, do paragraph (g)(3)(i) of this AD.

(B) If any crack is detected during any inspection required in paragraph (g)(3)(ii) of this AD, before further flight, repair the crack using a method approved by either the Manager, International Branch, ANM–116, Transport Airplane Directorate, FAA; or the European Aviation Safety Agency (EASA) (or its delegated agent); and modify the protective plate, and install a hydraulic pipe as applicable, in accordance with the Accomplishment Instructions of Dassault Mandatory Service Bulletin 7X–092, Revision 1, dated January 4, 2010.

Credit for Actions Accomplished in Accordance With Previous Service Information

(h) Doing a general visual inspection for damage, repairing wiring bundles and feeders, and modifying the applicable wiring and layout, in accordance with Dassault Mandatory Service Bulletin 7X–006, dated December 18, 2009; and doing a general visual inspection for absence of marks on the rear tank wall at the contact area, modifying the protective plate, installing a hydraulic pipe as applicable, and doing either an eddy current inspection for cracks or a penetrant inspection for cracks, in accordance with Dassault Mandatory Service Bulletin 7X–092, dated July 17, 2009; before the effective date of this AD is acceptable for compliance with the corresponding actions required by paragraphs (g)(1), (g)(2), and (g)(3) of this AD.

FAA AD Differences

Note 1: This AD differs from the MCAI and/or service information as follows: No differences.

Other FAA AD Provisions

(i) The following provisions also apply to this AD:

(1) *Alternative Methods of Compliance (AMOCs):* The Manager, International Branch, ANM–116, Transport Airplane Directorate, FAA, has the authority to approve AMOCs for this AD, if requested using the procedures found in 14 CFR 39.19. Send information to ATTN: Tom Rodriguez, Aerospace Engineer, International Branch, ANM–116, Transport Airplane Directorate, FAA, 1601 Lind Avenue, SW., Renton, Washington 98057–3356; telephone (425) 227–1137; fax (425) 227–1149. Before using any approved AMOC, notify your appropriate principal inspector, or lacking a principal inspector, the manager of the local flight standards district office/certificate holding district office. The AMOC approval letter must specifically reference this AD.

(2) *Airworthy Product:* For any requirement in this AD to obtain corrective actions from a manufacturer or other source, use these actions if they are FAA-approved. Corrective actions are considered FAA-approved if they are approved by the State of Design Authority (or their delegated agent). You are required to assure the product is airworthy before it is returned to service.

Related Information

(j) Refer to MCAI EASA Airworthiness Directive 2010–0029R1, dated November 25,

2010; Dassault Mandatory Service Bulletin 7X–006, Revision 1, dated March 3, 2010; and Dassault Mandatory Service Bulletin 7X–092, Revision 1, dated January 4, 2010; for related information.

Issued in Renton, Washington, on February 22, 2011.

Kalene C. Yanamura,

Acting Manager, Transport Airplane Directorate, Aircraft Certification Service.

[FR Doc. 2011–5165 Filed 3–7–11; 8:45 am]

BILLING CODE 4910–13–P

DEPARTMENT OF TRANSPORTATION

Federal Aviation Administration

14 CFR Part 39

[Docket No. FAA–2011–0185; Directorate Identifier 2011–CE–002–AD]

RIN 2120–AA64

Airworthiness Directives; Diamond Aircraft Industries GmbH Models DA 42, DA 42 NG, and DA 42 M–NG Airplanes

AGENCY: Federal Aviation Administration (FAA), Department of Transportation (DOT).

ACTION: Notice of proposed rulemaking (NPRM).

SUMMARY: We propose to adopt a new airworthiness directive (AD) for the products listed above. This proposed AD results from mandatory continuing airworthiness information (MCAI) originated by an aviation authority of another country to identify and correct an unsafe condition on an aviation product. The MCAI describes the unsafe condition as:

Since 2004, more than 30 reports have been received of in-flight loss of a rear passenger door on Diamond aeroplanes, the majority of which were DA 40. In additional, at least 18 doors have been replaced because of damage found on the hinge.

Diamond Aircraft Industries conducted analyses and structural tests to determine the root cause of the door opening in flight. The conclusions were that the primary locking mechanism provided adequate strength to react to the loads in flight. It was also determined that the root cause was the crew not properly securing the rear passenger door by the main locking mechanism, prior to flight. Damage to the hinges has been caused primarily by external loads (wind gust conditions) while the aeroplane was parked.

All DA 40 and DA 42 aeroplanes have a system installed that provides a warning if the main door latch is not fully closed and a secondary safety latch (with retaining bracket) design feature. The initial intended design function of the latch was to hold the rear passenger door in the "near closed" position while on the ground, protecting the door from wind gusts. However, the original retaining bracket Part Number (P/N) DA4–5200–00–69 might not hold the door in this "near closed" position while in flight * * *.

This condition, if not corrected, could result in the rear passenger door opening and departing the aeroplane in flight.

The proposed AD would require actions that are intended to address the unsafe condition described in the MCAI.

DATES: We must receive comments on this proposed AD by April 22, 2011.

ADDRESSES: You may send comments by any of the following methods:

- *Federal eRulemaking Portal:* Go to *http://www.regulations.gov.* Follow the instructions for submitting comments.
- *Fax:* (202) 493–2251.
- *Mail:* U.S. Department of Transportation, Docket Operations, M–30, West Building Ground Floor, Room W12–140, 1200 New Jersey Avenue, SE., Washington, DC 20590.
- *Hand Delivery:* U.S. Department of Transportation, Docket Operations, M–30, West Building Ground Floor, Room W12–140, 1200 New Jersey Avenue, SE., Washington, DC 20590, between 9 a.m. and 5 p.m., Monday through Friday, except Federal holidays.

For service information identified in this proposed AD, contact Diamond Aircraft Industries GmbH, N.A. Otto-Straße 5, A–2700 Wiener Neustadt, Austria, telephone: +43 2622 26700; fax: +43 2622 26780; e-mail: *office@diamond-air.at;* Internet: *http://www.diamond-air.at.* You may review copies of the referenced service information at the FAA, Small Airplane Directorate, 901 Locust, Kansas City, Missouri 64106. For information on the availability of this material at the FAA, call 816–329–4148.

Examining the AD Docket

You may examine the AD docket on the Internet at *http://www.regulations.gov;* or in person at the Docket Management Facility between 9 a.m. and 5 p.m., Monday through Friday, except Federal holidays. The AD docket contains this proposed AD, the regulatory evaluation, any comments received, and other information. The street address for the Docket Office (telephone (800) 647–5527) is in the **ADDRESSES** section. Comments will be available in the AD docket shortly after receipt.

FOR FURTHER INFORMATION CONTACT: Mike Kiesov, Aerospace Engineer, FAA, Small Airplane Directorate, 901 Locust, Room 301, Kansas City, Missouri 64106; telephone: (816) 329–4144; fax: (816) 329–4090; e-mail: *mike.kiesov@faa.gov.*

SUPPLEMENTARY INFORMATION:

Comments Invited

We invite you to send any written relevant data, views, or arguments about this proposed AD. Send your comments to an address listed under the **ADDRESSES** section. Include "Docket No. FAA–2011–0185; Directorate Identifier 2011–CE–002–AD" at the beginning of your comments. We specifically invite comments on the overall regulatory, economic, environmental, and energy aspects of this proposed AD. We will consider all comments received by the closing date and may amend this proposed AD because of those comments.

We will post all comments we receive, without change, to *http://www.regulations.gov,* including any personal information you provide. We will also post a report summarizing each substantive verbal contact we receive about this proposed AD.

Discussion

The European Aviation Safety Agency (EASA), which is the Technical Agent for the Member States of the European Community, has issued AD No. 2010–0235, dated November 10, 2010 (referred to after this as "the MCAI"), to correct an unsafe condition for the specified products. The MCAI states:

Since 2004, more than 30 reports have been received of in-flight loss of a rear passenger door on Diamond aeroplanes, the majority of which were DA 40. In additional, at least 18 doors have been replaced because of damage found on the hinge.

Diamond Aircraft Industries conducted analyses and structural tests to determine the root cause of the door opening in flight. The conclusions were that the primary locking mechanism provided adequate strength to react to the loads in flight. It was also determined that the root cause was the crew not properly securing the rear passenger door by the main locking mechanism, prior to flight. Damage to the hinges has been caused primarily by external loads (wind gust conditions) while the aeroplane was parked.

All DA 40 and DA 42 aeroplanes have a system installed that provides a warning if the main door latch is not fully closed and a secondary safety latch (with retaining bracket) design feature. The initial intended design function of the latch was to hold the rear passenger door in the "near closed" position while on the ground, protecting the door from wind gusts. However, the original retaining bracket Part Number (P/N) DA4–5200–00–69 might not hold the door in this "near closed" position while in flight. To address this problem, DAI have designed an improved retaining bracket, P/N DA4–5200–00–69–SB, which has been satisfactory tested to hold the door closed in flight. In addition, DAI have revised the Airplane Flight Manual (AFM) emergency door unlocked/open procedure.

This condition, if not corrected, could result in the rear passenger door opening and departing the aeroplane in flight.

For the reasons described above, this AD requires implementation of amendment of the AFM procedures for flight with the door unlocked/open, and replacement of the passenger door retaining bracket with an improved part.

You may obtain further information by examining the MCAI in the AD docket.

The MCAI covers Diamond Aircraft Industries GmbH Models DA 40 and DA 40F, DA 42, DA 42 NG, and DA 42 M–NG airplanes. Before the FAA received the MCAI, on November 23, 2010, we issued AD 2010–25–01, Amendment 39–16534 (75 FR 75868, December 7, 2010), as a unilateral action to address this unsafe condition on Models DA 40 and DA 40F airplanes. Since AD 2010–25–01 already addresses this unsafe condition on Models DA 40 and DA 40F airplanes, we are not including those models in this proposed AD.

Before we issued AD 2010–25–01, we received a comment on the notice of proposed rulemaking (NPRM) requesting that, due to common operating practice of leaving the front canopy open during taxi operations, the front canopy latch sensor be disconnected from the 'door open' annunciation. This would allow illumination only when the rear door was not properly latched to alert the pilot to the unsafe condition. In that NPRM, the FAA stated that further analysis was being done.

At this time, we believe the actions required in AD 2010–25–01 adequately address the unsafe condition on Models DA 40 and DA 40F airplanes and the similar actions in this proposed AD addresses the unsafe condition on Models DA 42, DA 42–NG, and DA 42 M–NG airplanes.

Relevant Service Information

Diamond Aircraft Industries GmbH has issued Mandatory Service Bulletin No. MSB 42–083/No. MSB 42NG–014, dated July 13, 2010, and Working Instruction WI–MSB–42–083/WI–MSB–42NG–014, dated July 13, 2010. The actions described in this service information are intended to correct the unsafe condition identified in the MCAI.

FAA's Determination and Requirements of the Proposed AD

This product has been approved by the aviation authority of another country, and is approved for operation in the United States. Pursuant to our bilateral agreement with this State of Design Authority, they have notified us of the unsafe condition described in the MCAI and service information referenced above. We are proposing this AD because we evaluated all information and determined the unsafe condition exists and is likely to exist or develop on other products of the same type design.

Differences Between This Proposed AD and the MCAI or Service Information

We have reviewed the MCAI and related service information and, in general, agree with their substance. But we might have found it necessary to use different words from those in the MCAI to ensure the AD is clear for U.S. operators and is enforceable. In making these changes, we do not intend to differ substantively from the information provided in the MCAI and related service information.

We might also have proposed different actions in this AD from those in the MCAI in order to follow FAA policies. Any such differences are highlighted in a Note within the proposed AD.

Costs of Compliance

We estimate that this proposed AD will affect 162 products of U.S. registry. We also estimate that it would take about 2 work-hours per product to comply with the basic requirements of this proposed AD. The average labor rate is $85 per work-hour. Required parts would cost about $71 per product.

Based on these figures, we estimate the cost of the proposed AD on U.S. operators to be $39,042 or $241 per product.

Authority for This Rulemaking

Title 49 of the United States Code specifies the FAA's authority to issue rules on aviation safety. Subtitle I, section 106, describes the authority of the FAA Administrator. "Subtitle VII: Aviation Programs," describes in more detail the scope of the Agency's authority.

We are issuing this rulemaking under the authority described in "Subtitle VII, Part A, Subpart III, section 44701: General requirements." Under that section, Congress charges the FAA with promoting safe flight of civil aircraft in air commerce by prescribing regulations for practices, methods, and procedures the Administrator finds necessary for safety in air commerce. This regulation is within the scope of that authority because it addresses an unsafe condition that is likely to exist or develop on products identified in this rulemaking action.

Regulatory Findings

We determined that this proposed AD would not have federalism implications under Executive Order 13132. This proposed AD would not have a substantial direct effect on the States, on the relationship between the national Government and the States, or on the distribution of power and responsibilities among the various levels of government.

For the reasons discussed above, I certify this proposed regulation:

1. Is not a "significant regulatory action" under Executive Order 12866;

2. Is not a "significant rule" under the DOT Regulatory Policies and Procedures (44 FR 11034, February 26, 1979); and

3. Will not have a significant economic impact, positive or negative, on a substantial number of small entities under the criteria of the Regulatory Flexibility Act.

We prepared a regulatory evaluation of the estimated costs to comply with this proposed AD and placed it in the AD docket.

List of Subjects in 14 CFR Part 39

Air transportation, Aircraft, Aviation safety, Incorporation by reference, Safety.

The Proposed Amendment

Accordingly, under the authority delegated to me by the Administrator, the FAA proposes to amend 14 CFR part 39 as follows:

PART 39—AIRWORTHINESS DIRECTIVES

1. The authority citation for part 39 continues to read as follows:

Authority: 49 U.S.C. 106(g), 40113, 44701.

§ 39.13 [Amended]

2. The FAA amends § 39.13 by adding the following new AD:

Diamond Aircraft Industries GmbH: Docket No. FAA–2011–0185; Directorate Identifier 2011–CE–002–AD.

Comments Due Date

(a) We must receive comments by April 22, 2011.

Affected ADs

(b) AD 2010–25–01 addresses this same condition on Diamond Aircraft Industries GmbH Models DA 40 and DA 40F airplanes.

Applicability

(c) This AD applies to Diamond Aircraft Industries GmbH Models DA 42, DA 42–NG, and DA 42 M–NG airplanes, all serial numbers, certificated in any category.

Subject

(d) Air Transport Association of America (ATA) Code 52: Doors.

Reason

(e) The mandatory continuing airworthiness information (MCAI) states:

Since 2004, more than 30 reports have been received of in-flight loss of a rear passenger door on Diamond aeroplanes, the majority of which were DA 40. In additional, at least 18 doors have been replaced because of damage found on the hinge.

Diamond Aircraft Industries conducted analyses and structural tests to determine the root cause of the door opening in flight. The conclusions were that the primary locking mechanism provided adequate strength to react to the loads in flight. It was also determined that the root cause was the crew not properly securing the rear passenger door by the main locking mechanism, prior to flight. Damage to the hinges has been caused primarily by external loads (wind gust conditions) while the aeroplane was parked.

All DA 40 and DA 42 aeroplanes have a system installed that provides a warning if the main door latch is not fully closed and a secondary safety latch (with retaining bracket) design feature. The initial intended design function of the latch was to hold the rear passenger door in the "near closed" position while on the ground, protecting the door from wind gusts. However, the original retaining bracket Part Number (P/N) DA4–5200–00–69 might not hold the door in this "near closed" position while in flight. To address this problem, DAI have designed an improved retaining bracket, P/N DA4–5200–00–69–SB, which has been satisfactory tested to hold the door closed in flight. In addition, DAI have revised the Airplane Flight Manual (AFM) emergency door unlocked/open procedure.

This condition, if not corrected, could result in the rear passenger door opening and departing the aeroplane in flight.

For the reasons described above, this AD requires implementation of amendment of the AFM procedures for flight with the door unlocked/open, and replacement of the passenger door retaining bracket with an improved part.

Actions and Compliance

(f) Unless already done, do the following actions:

(1) Within 6 months after the effective date of this AD, incorporate Diamond Aircraft Temporary Revision TR–MÄM 42–443, pages 3–55a and 3–55b, dated June 17, 2010, into the FAA-approved airplane flight manual following Diamond Aircraft Temporary Revision TR–MÄM 42–443, Cover Page, dated June 17, 2010.

(2) Within 6 months after the effective date of this AD, replace the rear passenger door retaining bracket with an improved design retaining bracket following Diamond Aircraft Industries GmbH Mandatory Service Bulletin No. MSB 42–083/No. MSB 42NG–014, dated July 13, 2010; and Diamond Aircraft Industries GmbH Work Instruction WI–MSB 42–083/WI–MSB 42NG–014, dated July 13, 2010.

(3) As of 6 months after the effective date of this AD, do not install a part number DA4–5200–00–69 rear passenger door retaining bracket.

FAA AD Differences

Note: This AD differs from the MCAI and/or service information as follows: On November 23, 2010, we issued AD 2010–25–01 as a unilateral action to address this unsafe condition on Diamond Aircraft Industries GmbH Models DA 40 and DA 40F airplanes. Subsequently, the European Aviation Safety Agency (EASA) issued AD 2010–0235 to address the same unsafe condition on both DA 40 and DA 42 series airplanes. Since AD 2010–25–01 already addresses this unsafe condition on Models DA 40 and DA 40F airplanes, we are not including those models in this AD.

Other FAA AD Provisions

(g) The following provisions also apply to this AD:

(1) *Alternative Methods of Compliance (AMOCs):* The Manager, Standards Office, FAA, has the authority to approve AMOCs for this AD, if requested using the procedures found in 14 CFR 39.19. Send information to ATTN: Mike Kiesov, Aerospace Engineer, FAA, Small Airplane Directorate, 901 Locust, Room 301, Kansas City, Missouri 64106; telephone: (816) 329–4144; fax: (816) 329–4090. Before using any approved AMOC on any airplane to which the AMOC applies, notify your appropriate principal inspector (PI) in the FAA Flight Standards District Office (FSDO), or lacking a PI, your local FSDO.

(2) *Airworthy Product:* For any requirement in this AD to obtain corrective actions from a manufacturer or other source, use these actions if they are FAA-approved. Corrective actions are considered FAA-approved if they are approved by the State of Design Authority (or their delegated agent). You are required to assure the product is airworthy before it is returned to service.

(3) *Reporting Requirements:* For any reporting requirement in this AD, a Federal agency may not conduct or sponsor, and a person is not required to respond to, nor shall a person be subject to a penalty for failure to comply with a collection of information subject to the requirements of the Paperwork Reduction Act unless that collection of information displays a current valid OMB Control Number. The OMB Control Number for this information collection is 2120–0056. Public reporting for this collection of information is estimated to be approximately 5 minutes per response, including the time for reviewing instructions, completing and reviewing the collection of information. All responses to this collection of information are mandatory. Comments concerning the accuracy of this burden and suggestions for reducing the burden should be directed to the FAA at: 800 Independence Ave., SW., Washington, DC 20591, Attn: Information Collection Clearance Officer, AES–200.

Related Information

(h) Refer to MCAI EASA AD 2010–0235, dated November 10, 2010; Diamond Aircraft Industries GmbH Mandatory Service Bulletin No. MSB 42–083/No. MSB 42NG–014, dated July 13, 2010; Diamond Aircraft Industries GmbH Work Instruction WI–MSB 42–083/WI–MSB 42NG–014, dated July 13, 2010; and Diamond Aircraft Temporary Revision TR–MÄM 42–443, pages 3–55a and 3–55b, dated June 17, 2010, for related information. For service information related to this AD, contact Diamond Aircraft Industries GmbH, N.A. Otto-Straße 5, A–2700 Wiener Neustadt, Austria, telephone: +43 2622 26700; fax: +43 2622 26780; e-mail: *office@diamond-air.at;* Internet: *http://www.diamond-air.at.* You may review copies of the referenced service information at the FAA, Small Airplane Directorate, 901 Locust, Kansas City, Missouri 64106. For information on the availability of this material at the FAA, call 816–329–4148.

Issued in Kansas City, Missouri, on March 2, 2011.

John R. Colomy,

Acting Manager, Small Airplane Directorate, Aircraft Certification Service.

[FR Doc. 2011–5176 Filed 3–7–11; 8:45 am]

BILLING CODE 4910–13–P

DEPARTMENT OF TRANSPORTATION

Federal Aviation Administration

14 CFR Part 39

[Docket No. FAA–2011–0151; Directorate Identifier 2009–NM–205–AD]

RIN 2120–AA64

Airworthiness Directives; Bombardier, Inc. Model DHC–8–400 Series Airplanes

AGENCY: Federal Aviation Administration (FAA), DOT.

ACTION: Notice of proposed rulemaking (NPRM).

SUMMARY: We propose to adopt a new airworthiness directive (AD) for the products listed above that would supersede an existing AD. This proposed AD results from mandatory continuing airworthiness information (MCAI) originated by an aviation authority of another country to identify and correct an unsafe condition on an aviation product. The MCAI describes the unsafe condition as:

Two cases of main landing gear collapse had been reported. Main landing gear collapse may result in unsafe landing of the aircraft.

* * * * *

The proposed AD would require actions that are intended to address the unsafe condition described in the MCAI.

DATES: We must receive comments on this proposed AD by April 22, 2011.

ADDRESSES: You may send comments by any of the following methods:

- *Federal eRulemaking Portal:* Go to *http://www.regulations.gov.* Follow the instructions for submitting comments.
- *Fax:* (202) 493–2251.
- *Mail:* U.S. Department of Transportation, Docket Operations,

M–30, West Building Ground Floor, Room W12–140, 1200 New Jersey Avenue, SE., Washington, DC 20590.

• *Hand Delivery:* U.S. Department of Transportation, Docket Operations, M–30, West Building Ground Floor, Room W12–40, 1200 New Jersey Avenue, SE., Washington, DC, between 9 a.m. and 5 p.m., Monday through Friday, except Federal holidays.

For service information identified in this proposed AD, contact Bombardier, Inc., Q-Series Technical Help Desk, 123 Garratt Boulevard, Toronto, Ontario M3K 1Y5, Canada; telephone 416–375–4000; fax 416–375–4539; e-mail *thd.qseries@aero.bombardier.com;* Internet *http://www.bombardier.com.* You may review copies of the referenced service information at the FAA, Transport Airplane Directorate, 1601 Lind Avenue SW., Renton, Washington. For information on the availability of this material at the FAA, call 425–227–1221.

Examining the AD Docket

You may examine the AD docket on the Internet at *http://www.regulations.gov;* or in person at the Docket Operations office between 9 a.m. and 5 p.m., Monday through Friday, except Federal holidays. The AD docket contains this proposed AD, the regulatory evaluation, any comments received, and other information. The street address for the Docket Operations office (telephone (800) 647–5527) is in the **ADDRESSES** section. Comments will be available in the AD docket shortly after receipt.

FOR FURTHER INFORMATION CONTACT: Craig Yates, Aerospace Engineer, Airframe and Mechanical Systems Branch, ANE–171, FAA, New York Aircraft Certification Office (ACO), 1600 Stewart Avenue, Suite 410, Westbury, New York 11590; telephone (516) 228–7355; fax (516) 794–5531.

SUPPLEMENTARY INFORMATION:

Comments Invited

We invite you to send any written relevant data, views, or arguments about this proposed AD. Send your comments to an address listed under the **ADDRESSES** section. Include "Docket No. FAA–2011–0151; Directorate Identifier 2009–NM–205–AD" at the beginning of your comments. We specifically invite comments on the overall regulatory, economic, environmental, and energy aspects of this proposed AD. We will consider all comments received by the closing date and may amend this proposed AD based on those comments.

We will post all comments we receive, without change, to *http://www.regulations.gov,* including any personal information you provide. We will also post a report summarizing each substantive verbal contact we receive about this proposed AD.

Discussion

On October 19, 2007, we issued AD 2007–22–09, Amendment 39–15245 (72 FR 61288, October 30, 2007). That AD required actions intended to address an unsafe condition on the products listed above.

Since we issued AD 2007–22–09, Transport Canada Civil Aviation (TCCA), which is the aviation authority for Canada, has issued Canadian Airworthiness Directive CF–2007–20R2, dated February 6, 2009 (referred to after this as "the MCAI"), to correct an unsafe condition for the specified products. The MCAI states:

> Two cases of main landing gear collapse had been reported. Main landing gear collapse may result in unsafe landing of the aircraft.
>
> Revision 1 of this directive amended the time compliance in paragraph C.2 (3 months in addition to 500 hours air time), to add new paragraph C.3 to cater for retract actuator which has accumulated less than 4,000 landings or 2 years since new and to add new paragraphs B.2 and C.4 to require that the respective inspections be repetitively performed until terminating action becomes available.
>
> Revision 2 of this directive amends the detailed visual inspection requirement in paragraph C.3 to include the main landing gear retract actuator, part number 46550–11, and to add new paragraph F to mandate the incorporation of main landing gear retract actuator part number, 46550–13 as the terminating action and to add new paragraph G for the maintenance requirement.

You may obtain further information by examining the MCAI in the AD docket.

Relevant Service Information

Bombardier has issued Service Bulletin 84–32–55, Revision A, dated March 10, 2008; and Repair Drawing 8/4–32–059, Issue 7, dated June 26, 2008. Bombardier has also issued Temporary Revision (TR) MRB–35, dated November 18, 2008, to Section 1–32 of Part 1 of the Bombardier Q400 Dash 8 Maintenance Requirements Manual (PSM 1–84–7). The actions described in this service information are intended to correct the unsafe condition identified in the MCAI.

FAA's Determination and Requirements of This Proposed AD

This product has been approved by the aviation authority of another country, and is approved for operation in the United States. Pursuant to our bilateral agreement with the State of Design Authority, we have been notified of the unsafe condition described in the MCAI and service information referenced above. We are proposing this AD because we evaluated all pertinent information and determined an unsafe condition exists and is likely to exist or develop on other products of the same type design.

Changes to AD 2007–22–09

This proposed AD would retain certain requirements of AD 2007–22–09. Since AD 2007–22–09 was issued, the AD format has been revised, and certain paragraphs have been rearranged. As a result, the corresponding paragraph identifiers have changed in this proposed AD, as listed in the following table:

REVISED PARAGRAPH IDENTIFIERS

Requirement in AD 2007–22–09	Corresponding requirement in this proposed AD
paragraph (f)	paragraph (g).
paragraph (g)	paragraph (h).
paragraph (h)	paragraph (i).
paragraph (i)	paragraph (j).
paragraph (j)	paragraph (k).
paragraph (l)	paragraph (v)(3).

We have revised paragraph (f) of AD 2007–22–09 to remove reference to Tasks Z700–03E and Z700–04E specified in Part 1 (Maintenance Review Board Report) of the Bombardier DHC–8 Series 400 Maintenance Requirements Manual (PSM 1–84–7). Instead, we have added Note 3 to this AD to specify that guidance on doing a general visual inspection to detect discrepancies of the left- and right-hand main landing gear system can be found in Tasks Z700–03E and Z700–04E of Part 1 (Maintenance Review Board Report) of the Bombardier DHC–8 Series 400 Maintenance Requirements Manual (PSM 1–84–7).

Change to Applicability of AD 2007–22–09

AD 2007–22–09 applies to airplanes having serial numbers (S/Ns) 003 and subsequent, which now corresponds to S/Ns 4003 and subsequent. This proposed AD applies to S/Ns 4003, 4004, 4006, and 4008 through 4208 inclusive, and also adds S/N 4001. The airplanes having serial numbers other than those specified in the Applicability of this proposed AD are not affected by the identified unsafe condition.

Differences Between This AD and the MCAI or Service Information

We have reviewed the MCAI and related service information and, in

general, agree with their substance. But we might have found it necessary to use different words from those in the MCAI to ensure the AD is clear for U.S. operators and is enforceable. In making these changes, we do not intend to differ substantively from the information provided in the MCAI and related service information.

We might also have proposed different actions in this AD from those in the MCAI in order to follow FAA policies. Any such differences are highlighted in a Note within the proposed AD.

Costs of Compliance

Based on the service information, we estimate that this proposed AD would affect about 55 products of U.S. registry.

The actions that are required by AD 2007–22–09 and retained in this proposed AD take about 5 work-hours per product, at an average labor rate of $85 per work hour. Based on these figures, the estimated cost of the currently required actions is $425 per product.

We estimate that it would take about 8 work-hours per product to comply with the new basic requirements of this proposed AD. The average labor rate is $85 per work-hour. Required parts would cost about $27,511 per product. Where the service information lists required parts costs that are covered under warranty, we have assumed that there will be no charge for these costs. As we do not control warranty coverage for affected parties, some parties may incur costs higher than estimated here. Based on these figures, we estimate the cost of the proposed AD on U.S. operators to be $1,550,505, or $28,191 per product.

Authority for This Rulemaking

Title 49 of the United States Code specifies the FAA's authority to issue rules on aviation safety. Subtitle I, section 106, describes the authority of the FAA Administrator. "Subtitle VII: Aviation Programs," describes in more detail the scope of the Agency's authority.

We are issuing this rulemaking under the authority described in "Subtitle VII, Part A, Subpart III, Section 44701: General requirements." Under that section, Congress charges the FAA with promoting safe flight of civil aircraft in air commerce by prescribing regulations for practices, methods, and procedures the Administrator finds necessary for safety in air commerce. This regulation is within the scope of that authority because it addresses an unsafe condition that is likely to exist or develop on products identified in this rulemaking action.

Regulatory Findings

We determined that this proposed AD would not have federalism implications under Executive Order 13132. This proposed AD would not have a substantial direct effect on the States, on the relationship between the national Government and the States, or on the distribution of power and responsibilities among the various levels of government.

For the reasons discussed above, I certify this proposed regulation:

1. Is not a "significant regulatory action" under Executive Order 12866;
2. Is not a "significant rule" under the DOT Regulatory Policies and Procedures (44 FR 11034, February 26, 1979); and
3. Will not have a significant economic impact, positive or negative, on a substantial number of small entities under the criteria of the Regulatory Flexibility Act.

We prepared a regulatory evaluation of the estimated costs to comply with this proposed AD and placed it in the AD docket.

List of Subjects in 14 CFR Part 39

Air transportation, Aircraft, Aviation safety, Incorporation by reference, Safety.

The Proposed Amendment

Accordingly, under the authority delegated to me by the Administrator, the FAA proposes to amend 14 CFR part 39 as follows:

PART 39—AIRWORTHINESS DIRECTIVES

1. The authority citation for part 39 continues to read as follows:

Authority: 49 U.S.C. 106(g), 40113, 44701.

§ 39.13 [Amended]

2. The FAA amends § 39.13 by removing Amendment 39–15245 (72 FR 61288, October 30, 2007) and adding the following new AD:

Bombardier, Inc.: Docket No. FAA–2011–0151; Directorate Identifier 2009–NM–205–AD.

Comments Due Date

(a) We must receive comments by April 22, 2011.

Affected ADs

(b) The AD supersedes AD 2007–22–09, Amendment 39–15245.

Applicability

(c) This AD applies to Bombardier, Inc. Model DHC–8–400, –401, and –402 airplanes, certificated in any category, having serial numbers (S/Ns) 4001, 4003, 4004, 4006, and 4008 through 4208 inclusive.

Subject

(d) Air Transport Association (ATA) of America Code 32: Landing Gear.

Reason

(e) The mandatory continuing airworthiness information (MCAI) states:

Two cases of main landing gear collapse had been reported. Main landing gear collapse may result in unsafe landing of the aircraft.

* * * * *

Compliance

(f) You are responsible for having the actions required by this AD performed within the compliance times specified, unless the actions have already been done.

Restatement of AD 2007–22–09, With Updated Service Information, Limited Affected Airplanes, and Revised Compliance Times

General Visual Inspection of Main Landing Gear (MLG) System, and Corrective Actions

(g) For airplanes having S/Ns 003, 004, 006, and 008 through 182 inclusive (now referred to as S/Ns 4003, 4004, 4006, and 4008 through 4182 inclusive), before further flight, do a general visual inspection to detect discrepancies of the left- and right-hand MLG system and do all applicable corrective actions, in accordance with a method approved by the Manager, New York Aircraft Certification Office (ACO), FAA; or Transport Canada Civil Aviation (TCCA) (or its delegated agent).

Note 1: For the purposes of this AD, a general visual inspection is: "A visual examination of an interior or exterior area, installation, or assembly to detect obvious damage, failure, or irregularity. This level of inspection is made from within touching distance unless otherwise specified. A mirror may be necessary to ensure visual access to all surfaces in the inspection area. This level of inspection is made under normally available lighting conditions such as daylight, hangar lighting, flashlight, or droplight and may require removal or opening of access panels or doors. Stands, ladders, or platforms may be required to gain proximity to the area being checked."

Note 2: Guidance on doing a general visual inspection to detect discrepancies of the left- and right-hand MLG system can be found in Tasks Z700–03E and Z700–04E of Part 1 (Maintenance Review Board Report) of the Bombardier DHC–8 Series 400 Maintenance Requirements Manual (PSM 1–84–7).

General Visual Inspection of the Jam Nut of the Retract Actuator of the MLG and Corrective Actions

(h) For all airplanes except for the airplane having serial number 4001: Before further flight, do a general visual inspection of the jam nut of the retract actuator of the left- and right-hand MLG to ensure the wire lock is in place and the nut is secured. If the wire lock is not in place or if the jam nut is not secured, before further flight, adjust the retracted length of the rod end, torque the jam nut, install a wire lock, and lubricate the piston, as applicable, in accordance with

Bombardier Repair Drawing (RD) 8/4–32–059, Issue 4, dated September 14, 2007; or Issue 7, dated June 26, 2008. As of the effective date of this AD, use only Bombardier RD 8/4–32–059, Issue 7, dated June 26, 2008. Doing the revision required by paragraph (r) of this AD terminates the inspection required by this paragraph.

Note 3: Bombardier RD 8/4–32–059, Issue 4, dated September 14, 2007, refers to Goodrich Service Concession Request SCR 086–07, Revision C, dated September 14, 2007 (specifically item 14); and Bombardier RD 8/4–32–059, Issue 7, dated June 26, 2008, refers to Goodrich Service Concession Request SCR 086–07, Revision F, dated June 13, 2008 (specifically item 14); as an additional source of service information for adjusting the retracted length of the rod end, torquing the jam nut, installing a wire lock, and lubricating the piston if necessary, as required by paragraph (h) of this AD.

Detailed Inspection of the Retract Actuator of the MLG, With Extended Compliance Time for Paragraph (j) of This AD

(i) For airplanes having S/Ns 003, 004, 006, and 008 through 182 inclusive (now referred to as S/Ns 4003, 4004, 4006, and 4008 through 4182 inclusive) on which the retract actuator of the MLG, P/N 46550–7 or 46550–9, has accumulated 8,000 or more total landings or has been in-service 4 or more years since new, as of November 14, 2007 (the effective date of 2007–22–09): Before further flight, do a detailed inspection of affected parts for any signs of corrosion or wear, and applicable related investigative and corrective actions, in accordance with Bombardier RD 8/4–32–059, Issue 4, dated September 14, 2007; or Issue 7, dated June 26, 2008. As of the effective date of this AD, use only Bombardier RD 8/4–32–059, Issue 7, dated June 26, 2008.

Note 4: For the purposes of this AD, a detailed inspection is: "An intensive examination of a specific item, installation, or assembly to detect damage, failure, or irregularity. Available lighting is normally supplemented with a direct source of good lighting at an intensity deemed appropriate. Inspection aids such as mirror, magnifying lenses, *etc.,* may be necessary. Surface cleaning and elaborate procedures may be required."

(j) For airplanes having S/Ns 003, 004, 006, and 008 through 182 inclusive (now referred to as S/Ns 4003, 4004, 4006, and 4008 through 4182 inclusive) with a retract actuator of the MLG, P/N 46550–7 or 46550–9, other than those identified in paragraph (i) of this AD: Do a detailed inspection of affected parts for any signs of corrosion or wear, and applicable related investigative and corrective actions, in accordance with Bombardier RD 8/4–32–059, Issue 4, dated September 14, 2007; or Issue 7, dated June 26, 2008; at the later of the times specified in paragraphs (j)(1) and (j)(2) of this AD. As of the effective date of this AD, use only Bombardier RD 8/4–32–059, Issue 7, dated June 26, 2008.

(1) Before the accumulation of 4,500 total landings or 27 months since new, whichever occurs first.

(2) Within 500 flight hours after November 14, 2007, or within 3 months after the effective date of this AD, whichever occurs first.

Note 5: Bombardier RD 8/4–32–059, Issue 7, dated June 26, 2008, refers to Goodrich Service Concession Request SCR 086–07, Revision F, dated June 13, 2008, as an additional source of service information for accomplishing the applicable related investigative and corrective actions required by paragraphs (i) and (j) of this AD.

Actions Done in Accordance With Previous Issues of Service Information

(k) Actions done before November 14, 2007, in accordance with repair drawings specified in Table 1 of this AD, are acceptable for compliance with the corresponding actions specified in paragraphs (h) through (j) of this AD.

TABLE 1—PREVIOUS REPAIR DRAWINGS

Document	Issue	Date
Bombardier Repair Drawing 8/4–32–059	1	September 12, 2007.
Bombardier Repair Drawing 8/4–32–059	2	September 13, 2007.
Bombardier Repair Drawing 8/4–32–059	3	September 13, 2007.

New Requirements of this AD

General Visual Inspection of the Jam Nut of the Retract Actuator of the MLG, and Corrective Actions

(l) For all airplanes: At the later of the times specified in paragraphs (l)(1) and (l)(2) of this AD, do a general visual inspection of the left- and right-hand MLG retract actuator jam nut to ensure that the wire lock is in place and that the nut is secure, in accordance with a method approved by the Manager, New York Aircraft Certification Office (ACO), FAA; or Transport Canada Civil Aviation (TCCA) (or its delegated agent). If the wire lock is not in place or the jam nut is not secured, before further flight, re-torque the jam nut and safety lockwire, in accordance with Bombardier RD 8/4–32–059, Issue 7, dated June 26, 2008. Repeat the inspection thereafter at intervals not to exceed 250 flight cycles or 30 days, whichever occurs first. Doing the revision required by paragraph (r) of this AD terminates the inspections required by this paragraph.

(1) Within 250 flight cycles or 30 days after accomplishing the inspection required by paragraph (h) of this AD, whichever occurs first.

(2) Within 7 days after the effective date of this AD.

Note 6: Guidance for doing a general visual inspection to detect discrepancies of the left- and right-hand MLG system can be found in Tasks Z700–03E and Z700–04E of Part 1 (Maintenance Review Board Report) of the Bombardier DHC–8 Series 400 Maintenance Requirements Manual (PSM 1–84–7).

Detailed Inspection of the Retract Actuator of the MLG, and Related Investigative and Corrective Actions

(m) For airplanes equipped with a MLG retract actuator having P/N 46550–7 or 46550–9: At the later of the times specified in paragraphs (m)(1) and (m)(2) of this AD, do a detailed inspection of affected parts for any signs of corrosion or wear, and do applicable related investigative and corrective actions, in accordance with Bombardier RD 8/4–32–059, Issue 7, dated June 26, 2008. Do all applicable related investigative and corrective actions before further flight. Repeat the inspection thereafter at intervals not to exceed 2,000 flight cycles or 12 months, whichever occurs first.

(1) Within 2,000 flight cycles or within 12 months after accomplishing the inspection required by paragraph (i) or (j) of this AD, whichever occurs first.

(2) Within 30 days after the effective date of this AD.

(n) For airplanes having serial numbers 4001, 4003, 4004, 4006, and 4008 through 4182 inclusive equipped with a MLG retract actuator having P/N 46550–11: At the later of the times specified in paragraphs (n)(1) and (n)(2) of this AD, do a detailed inspection of affected parts for any signs of corrosion or wear, and applicable related investigative and corrective actions, in accordance with Bombardier RD 8/4–32–059, Issue 7, dated June 26, 2008. Do all applicable related investigative and corrective actions before further flight. Repeat the inspection thereafter at intervals not to exceed 2,000 flight cycles or 12 months, whichever occurs first.

(1) Before the accumulation of 4,500 total landings or 27 months since new, whichever occurs first.

(2) Within 500 flight hours or 3 months after the effective date of this AD, whichever occurs first.

(o) For airplanes having serial numbers 4001, 4003, 4004, 4006, and 4008 through 4182 inclusive equipped with a MLG retract actuator having P/N 46550–7, P/N 46550–9, or P/N 46550–11, and that have accumulated 7,500 total flight cycles or more as of the effective date of this AD, or that have more than 48 months since new: Within 500 flight cycles or 3 months after the effective date of this AD, whichever occurs first, replace the affected retract actuator with a new design

retract actuator having P/N 46550–13, in accordance with Bombardier Service Bulletin 84–32–55, Revision A, dated March 10, 2008 (Bombardier Modsum 4–901603). Doing the replacement specified in this paragraph terminates the requirements of paragraphs (i), (j), (m), and (n) of this AD.

(p) For airplanes having serial numbers 4001, 4003, 4004, 4006, and 4008 through 4182 inclusive equipped with MLG retract actuators having P/N 46550–7, P/N 46550–9, or P/N 46550–11, that have accumulated less than 7,500 total flight cycles as of the effective date of this AD and that have 48 months or less since new: Prior to the accumulation of 8,000 total flight cycles, or within 51 months since new, whichever occurs first, replace the affected retract actuator with a new design retract actuator having P/N 46550–13, in accordance with Bombardier Service Bulletin 84–32–55, Revision A, dated March 10, 2008 (Bombardier Modsum 4–901603). Doing the replacement specified in this paragraph terminates the requirements of paragraphs (i), (j), (m), and (n) of this AD.

(q) Replacing the affected retract actuator with a new design retract actuator having P/N 46550–15, in accordance with the Accomplishment Instructions of Bombardier Service Bulletin 84–32–60, Revision A, dated September 29, 2008 (Bombardier Modsum 4–901610), is also acceptable for compliance with the requirements of paragraphs (o) and (p) of this AD.

Revision of the Maintenance Program

(r) For all airplanes: Within 30 days after the effective date of this AD, revise the maintenance program by incorporating Task 320100–211 (repetitive detailed inspections of the retraction actuator rod end jam nut, gland nut, and actuator attachment pins for condition, the security of installation, and corrosion) and Task 320100–212 (repetitive restorations of the retraction actuator for complete overhaul), as specified in Bombardier Temporary Revision (TR) MRB–35, dated November 18, 2008, to the Bombardier Q400 Dash 8 Maintenance Requirements Manual (PSM 1–84–7). Doing this revision terminates the requirements of paragraphs (h) and (l) of this AD. The initial compliance times for doing Task 320100–211 and Task 320100–212 are specified in paragraphs (r)(1) and (r)(2) of this AD. After doing this revision, no alternative inspections, restorations, or intervals may be used, unless the inspections, restorations, or intervals are approved as an alternative method of compliance (AMOC) in accordance with the procedures specified in paragraph (v)(1) of this AD.

(1) For Task 320100–211 in Bombardier TR MRB–35, dated November 18, 2008, to the Bombardier Q400 Dash 8 Maintenance Requirements Manual (PSM 1–84–7): The compliance time for the initial inspection is within 600 flight hours after the effective date of this AD.

(2) For Task 320100–212 in Bombardier TR MRB–35, dated November 18, 2008, to the Bombardier Q400 Dash 8 Maintenance Requirements Manual (PSM 1–84–7): The compliance time for the initial restoration is the later of the times of paragraphs (r)(2)(i) and (r)(2)(ii) of this AD.

(i) Prior to the accumulation of 25,000 total flight cycles, or within 12 years since the date of issuance of the original airworthiness certificate or the date of issuance of the original export certificate of airworthiness, whichever occurs first.

(ii) Within 500 flight cycles after the effective date of this AD.

Note 7: The actions required by paragraph (r) of this AD may be done by inserting copies of Bombardier TR MRB–35, dated November 18, 2008, into the Bombardier Q400 Dash 8 Maintenance Requirements Manual (PSM 1–84–7). When this TR has been included in general revisions of the PSM, the general revisions may be inserted in the PSM, provided the relevant information in the general revision is identical to that in Bombardier TR MRB–35, dated November 18, 2008.

Credit for Actions Accomplished in Accordance With Previous Service Information

(s) Doing a general visual inspection of the jam nut of the retract actuator of the left- and right-hand MLG; and doing a detailed inspection of affected parts for any signs of corrosion or wear, and applicable related investigative and corrective actions; is also acceptable for compliance with the corresponding requirements of paragraphs (h), (i), (j), (l), (m), and (n) of this AD, if done before the effective date of this AD in accordance with Bombardier Repair Drawing 8/4–32–059, Issue 5, dated September 20, 2007; or Bombardier Repair Drawing 8/4–32–059, Issue 6, dated January 31, 2008.

(t) Replacing the affected retract actuator with a new design retract actuator having P/N 46550–13 is also acceptable for compliance with the requirements of paragraphs (o) and (p) of this AD, if done before the effective date of this AD in accordance with Bombardier Service Bulletin 84–32–55, dated January 14, 2008 (Modsum 4–901603).

No Reporting

(u) While Canadian Airworthiness Directive CF–2007–20R2, dated February 6, 2009, has a reporting action, this AD does not require reporting.

FAA AD Differences

Note 8: This AD differs from the MCAI and/or service information as follows: Although the MCAI or service information tells you to submit information to the manufacturer, paragraph (u) of this AD specifies that such submittal is not required.

Other FAA AD Provisions

(v) The following provisions also apply to this AD:

(1) *Alternative Methods of Compliance (AMOCs):* The Manager, New York Aircraft Certification Office (ACO), ANE–170, FAA, has the authority to approve AMOCs for this AD, if requested using the procedures found in 14 CFR 39.19. Send information to ATTN: Program Manager, Continuing Operational Safety, FAA, New York ACO, 1600 Stewart Avenue, Suite 410, Westbury, New York, 11590; telephone 516–228–7300; fax 516–794–5531. Before using any approved AMOC on any airplane to which the AMOC applies, notify your principal maintenance inspector (PMI) or principal avionics inspector (PAI), as appropriate, or lacking a principal inspector, your local Flight Standards District Office. The AMOC approval letter must specifically reference this AD. AMOCs approved previously in accordance with AD 2007–22–09, Amendment 39–15245, are approved as AMOCs for the corresponding provisions of paragraph (i) and (j) of this AD.

(2) *Airworthy Product:* For any requirement in this AD to obtain corrective actions from a manufacturer or other source, use these actions if they are FAA-approved. Corrective actions are considered FAA-approved if they are approved by the State of Design Authority (or their delegated agent). You are required to assure the product is airworthy before it is returned to service.

(3) *Special Flight Permits:* Special flight permits may be issued in accordance with sections 21.197 and 21.199 of the Federal Aviation Regulations (14 CFR 21.197 and 21.199) to operate the airplane to a location where the airplane can be inspected (if the operator elects to do so), provided that the procedures and limitations in paragraphs (v)(3)(i) and (v)(3)(ii) of this AD are adhered to.

(i) Flight Crew Limitations and Procedures:

(A) Ferry flight with gear extended and pinned;

(B) Landing to be conducted at a minimum descent rate;

(C) Minimize braking on landing;

(D) Flight to be conducted in accordance with Section 4.8 of the Aircraft Operating Manual (AOM);

(E) Only essential crew on board; and

(F) Flight in known or forecast icing condition is prohibited.

(ii) Maintenance Procedures:

(A) Do the general visual inspection required by paragraph (h) of this AD;

(B) Do the general visual inspections of the stabilizer stay and the hinge points of the MLG for general condition and security, in accordance with Bombardier Q400 All Operator Message 236A, dated September 11, 2007;

(C) If no discrepancy is detected during the inspections required by paragraph (v)(3)(ii)(A) and (v)(3)(ii)(B) of this AD, before further flight, insert the ground lock pins and a wire lock of the MLG in place.

(D) Ensure the nose landing gear ground lock is engaged.

Related Information

(w) Refer to MCAI Canadian Airworthiness Directive CF–2007–20R2, dated February 6, 2009; Bombardier Service Bulletin 84–32–55, Revision A, dated March 10, 2008; Bombardier Service Bulletin 84–32–60, Revision A, dated September 29, 2008; Bombardier Repair Drawing 8/4–32–059, Issue 7, dated June 26, 2008; and Bombardier Temporary Revision MRB–35, dated November 18, 2008, to the Bombardier Q400 Dash 8 Maintenance Requirements Manual (PSM 1–84–7); for related information.

Issued in Renton, Washington, on February 22, 2011.

Kalene C. Yanamura,

Acting Manager, Transport Airplane Directorate, Aircraft Certification Service.

[FR Doc. 2011–5161 Filed 3–7–11; 8:45 am]

BILLING CODE 4910–13–P

DEPARTMENT OF TRANSPORTATION

Federal Aviation Administration

14 CFR Part 39

[Docket No. FAA–2007–28661; Directorate Identifier 2007–NM–013–AD]

RIN 2120–AA64

Airworthiness Directives; The Boeing Company Model 737–600, –700, –700C, –800, and –900 Series Airplanes

AGENCY: Federal Aviation Administration (FAA), DOT.

ACTION: Supplemental notice of proposed rulemaking (NPRM); reopening of comment period.

SUMMARY: We are revising an earlier proposed airworthiness directive (AD) for the products listed above. That NPRM proposed to require installation of an automatic shutoff system for the center tank fuel boost pumps, installation of a placard in the airplane flight deck if necessary, and concurrent modification of the P5–2 fuel control module assembly. That NPRM also proposed to require revisions to the Limitations and Normal Procedures sections of the airplane flight manual to advise the flightcrew of certain operating restrictions for airplanes equipped with an automated center tank fuel pump shutoff control. Additionally, that NPRM proposed to require a revision to the Airworthiness Limitations (AWL) section of the Instructions for Continued Airworthiness (ICA) to incorporate AWL No. 28–AWL–19 and No. 28–AWL–23. That NPRM further proposed to require installation of a secondary control relay for the electrical control circuit of each of the two center tank fuel boost pumps. That NPRM was prompted by fuel system reviews conducted by the manufacturer. This action revises that NPRM by adding airplanes, adding additional operational testing of the automatic shutoff system for certain airplanes, removing the requirement for incorporating AWL No. 28–AWL–19 into the AWL section of the ICA, and adding an option of installation and maintenance of universal fault interrupters using a certain supplemental type certificate. We are proposing this supplemental NPRM to prevent center tank fuel pump operation with continuous low pressure, which could lead to friction sparks or overheating in the fuel pump inlet that could create a potential ignition source inside the center fuel tank. These conditions, in combination with flammable fuel vapors, could result in a center fuel tank explosion and consequent loss of the airplane. Since these actions impose an additional burden over those proposed in the NPRM, we are reopening the comment period to allow the public the chance to comment on these proposed changes.

DATES: We must receive comments on this supplemental NPRM by April 4, 2011.

ADDRESSES: You may send comments by any of the following methods:

- *Federal eRulemaking Portal:* Go to *http://www.regulations.gov.* Follow the instructions for submitting comments.
- *Fax:* 202–493–2251.
- *Mail:* U.S. Department of Transportation, Docket Operations, M–30, West Building Ground Floor, Room W12–140, 1200 New Jersey Avenue, SE., Washington, DC 20590.
- *Hand Delivery:* U.S. Department of Transportation, Docket Operations, M–30, West Building Ground Floor, Room W12–140, 1200 New Jersey Avenue, SE., Washington, DC 20590, between 9 a.m. and 5 p.m., Monday through Friday, except Federal holidays.

For service information identified in this AD, contact Boeing Commercial Airplanes, Attention: Data & Services Management, P.O. Box 3707, MC 2H–65, Seattle, Washington 98124–2207; telephone 206–544–5000, extension 1; fax 206–766–5680; e-mail *me.boecom@boeing.com;* Internet *https://www.myboeingfleet.com.* You may review copies of the referenced service information at the FAA, Transport Airplane Directorate, 1601 Lind Avenue, SW., Renton, Washington. For information on the availability of this material at the FAA, call 425–227–1221.

Examining the AD Docket

You may examine the AD docket on the Internet at *http://www.regulations.gov;* or in person at the Docket Management Facility between 9 a.m. and 5 p.m., Monday through Friday, except Federal holidays. The AD docket contains this proposed AD, the regulatory evaluation, any comments received, and other information. The street address for the Docket Office (phone: 800–647–5527) is in the **ADDRESSES** section. Comments will be available in the AD docket shortly after receipt.

FOR FURTHER INFORMATION CONTACT: Tak Kobayashi, Aerospace Engineer, Propulsion Branch, ANM–140S, FAA, Seattle Aircraft Certification Office, 1601 Lind Avenue, SW., Renton, Washington 98057–3356; *phone:* (425) 917–6499; *fax:* (425) 917–6590; *e-mail: Takahisa.Kobayashi@faa.gov.*

SUPPLEMENTARY INFORMATION:

Comments Invited

We invite you to send any written relevant data, views, or arguments about this proposed AD. Send your comments to an address listed under the **ADDRESSES** section. Include "Docket No. FAA–2007–28661; Directorate Identifier 2007–NM–013–AD;" at the beginning of your comments. We specifically invite comments on the overall regulatory, economic, environmental, and energy aspects of this proposed AD. We will consider all comments received by the closing date and may amend this proposed AD because of those comments.

We will post all comments we receive, without change, to *http://www.regulations.gov,* including any personal information you provide. We will also post a report summarizing each substantive verbal contact we receive about this proposed AD.

Discussion

We issued an NPRM to amend 14 CFR part 39 to include an airworthiness directive (AD) that would apply to certain Model 737–600, –700, –700C, –800, and –900 series airplanes. That NPRM published in the **Federal Register** on July 10, 2007 (72 FR 37479). That NPRM proposed to require installation of an automatic shutoff system for the center tank fuel boost pumps, installation of a placard in the airplane flight deck if necessary, and concurrent modification of the P5–2 fuel control module assembly. That NPRM proposed to require revisions to the Limitations and Normal Procedures sections of the airplane flight manual to advise the flightcrew of certain operating restrictions for airplanes equipped with an automated center tank fuel pump shutoff control. Additionally, that NPRM proposed to require a revision to the Airworthiness Limitations (AWL) section of the Instructions for Continued Airworthiness (ICA) to incorporate AWL No. 28–AWL–19 and No. 28–AWL–23. That NPRM also proposed to require installation of a secondary control relay for the electrical control circuit of each of the two center tank fuel boost pumps.

Actions Since Previous NPRM Was Issued

Since we issued the previous NPRM, we received a report of failure of the left-hand fuel pump of the center wing tank (CWT) to shut off after being selected "OFF" by the flightcrew during flight on a Model 737–700 airplane. Subsequent to that report, the failure was found on two additional airplanes. Information indicated that the autoshutoff system appeared to function normally; however, when the flightcrew manually turned off the CWT pump switches, that action turned off the right-hand pump, but re-energized the left-hand pump due to incorrect wiring. The low-pressure lights turned off, incorrectly indicating to the flightcrew that power to both pumps had been removed. The failure condition results in continual running of the left-hand fuel pump without indication to the flightcrew, which could lead to localized overheating of parts inside the fuel pump, and which could produce an ignition source inside the fuel tank.

Investigation revealed that incorrect wiring could occur on airplanes on which an autoshutoff system was installed in accordance with Boeing Alert Service Bulletin 737–28A1206, dated January 11, 2006; or Revision 1, dated January 30, 2008. Functional tests conducted in accordance with Boeing Alert Service Bulletin 737–28A1206, dated January 11, 2006; or Revision 1, dated January 30, 2008; alone are not adequate to detect the incorrect wiring condition.

As a result, on November 18, 2008, we issued emergency AD 2008–24–51, 39–15781, for Model 737–600, –700, –700C, –800, and –900 series airplanes to prevent extended dry-running of the fuel pump. (That AD published in the **Federal Register** on February 24, 2009 (74 FR 8155)). That AD requires accomplishing a wiring test of the autoshutoff system to verify continuity and a visual verification that the wiring is correctly installed; doing corrective actions, if necessary; and doing a functional test of the autoshutoff system, and applicable maintenance actions.

The preamble to AD 2008–24–51 explains that we consider the requirements of that AD "interim action." We did not require the corrective actions provided in AD 2008–24–51 to be accomplished on airplanes for which the power-failed "ON" (*i.e.,* uncommanded pump "ON") protection system was installed in accordance with Boeing Alert Service Bulletin 737–28A1248, dated December 21, 2006, or Revision 1, dated January 9, 2008; however, we were considering further rulemaking that might require additional testing for those airplanes. We now have determined that additional testing, which has been incorporated into Boeing Alert Service Bulletin 737–28–1206, Revision 2, dated May 21, 2009 (described in the Relevant Service Information section of this supplemental NPRM), must be accomplished. This supplemental NPRM follows from that determination.

In addition, AD 2008–24–51 provides an optional installation of the power failed 'ON' protection system for the center tank fuel boost pump in accordance with Boeing Alert Service Bulletin 737–28A1248, dated December 21, 2006; or Revision 1, dated January 9, 2008. That AD states that the optional installation terminates the automatic shutoff system wiring test required by paragraphs (f) and (g) of AD 2008–24–51.

Since we issued that AD, we have determined that installation of that protection system does not correct potential incorrect wiring that could exist on airplanes on which an autoshutoff system was installed in accordance with Boeing Alert Service Bulletin 737–28A1206, dated January 11, 2006; or Revision 1, dated January 30, 2008. Therefore, we have revised the proposed actions specified in this supplemental NPRM to require accomplishment of Boeing Alert Service Bulletin 737–28A1206, Revision 2, dated May 21, 2009.

However, we have also added new paragraph (r) to this supplemental NPRM to allow accomplishment of Boeing Alert Service Bulletin 737–28A1206, dated January 11, 2006; or Revision 1, dated January 30, 2008; as acceptable for compliance with the corresponding actions specified in paragraph (g) of this supplemental NPRM, provided one of the following actions has been accomplished: (1) The procedures specified in paragraph (f) of AD 2008–24–51, or (2) the actions specified in Part 3 of the Accomplishment Instructions of Boeing Alert Service Bulletin 737–28A1206, Revision 2, dated May 21, 2009.

Relevant Service Information

Since we issued the original NPRM, Boeing has issued Alert Service Bulletin 737–28A1206, Revision 2, dated May 21, 2009; and Alert Service Bulletin 737–28A1248, Revision 2, dated August 28, 2009. In the original NPRM, we referred to Boeing Alert Service Bulletin 737–28A1206, dated January 11, 2006, as the appropriate source of service information for installing the automatic shutoff system, and to Boeing Alert Service Bulletin 737–28A1248, dated December 21, 2006, as the appropriate source of service information for installing the secondary pump control relays.

Boeing Alert Service Bulletin 737–28A1206, Revision 2, among other changes, introduces new operational tests in Part 3 of the Work Instructions for airplanes that have incorporated Boeing Alert Service Bulletin 737–28A1206, dated January 11, 2006; or Revision 1, dated January 30, 2008; but have not accomplished paragraph (f) of AD 2008–24–51. Boeing Alert Service Bulletin 737–28A1206, Revision 2, also clarifies instructions and incorporates additional operational tests to ensure the system is installed properly for new installations.

The actions specified in Boeing Alert Service Bulletin 737–28A1248, Revision 2, are essentially the same as the actions specified in Boeing Alert Service Bulletin 737–28A1248, dated December 21, 2006 (referred to in the original NPRM), although certain illustrations showing the location of certain connectors have been corrected.

We have revised this supplemental NPRM to refer to Boeing Alert Service Bulletin 737–28A1206, Revision 2; and Boeing Alert Service Bulletin 737–28A1248, Revision 2.

We have also added a new paragraph (q) to this supplemental NPRM specifying that accomplishing the actions in accordance with Boeing Alert Service Bulletin 737–28A1248, dated December 21, 2006; or Boeing Alert Service Bulletin 737–28A1248, Revision 1, dated January 9, 2008; before the effective date of the AD is acceptable for compliance with the proposed requirements of paragraph (j) (specified as paragraph (l) of the original NPRM) of this supplemental NPRM.

Boeing Alert Service Bulletin 737–28A1206, Revision 2, dated May 21, 2009, refers to Boeing Component Service Bulletin 233A3202–28–03, dated January 12, 2006, as an additional source of guidance for replacing the left and right center boost pump switches, and changing the wiring, of the P5–2 fuel control module assembly.

Boeing has issued Service Bulletin Information Notice 737–28A1206 IN 05, dated October 7, 2010, to inform operators of the following items:

- Sheet 2 of 4 of Figure 11 of Boeing Alert Service Bulletin 737–28A1206, Revision 2, dated May 21, 2009, was inadvertently replaced with Sheet 2 of 4 of Figure 11 from Boeing Alert Service Bulletin 737–28A1206, dated January 11, 2006. That figure was corrected in Boeing Alert Service Bulletin 737–28A1206, Revision 1, dated January 30,

2008, and did not need to be changed in Boeing Alert Service Bulletin 737–28A1206, Revision 2, dated May 21, 2009. We have added Figure 1 in this supplemental NPRM to provide the correct Sheet 2 of 4 of Figure 11.

- A typographical error appears in the name of the part in the first row of the "Parts Modified and Reidentified" table in paragraph 2.C.3. of Boeing Alert Service Bulletin 737–28A1206, Revision 2, dated May 21, 2009.

Boeing intends to correct these errors in the next revision of Boeing Alert Service Bulletin 737–28A1206.

Other Relevant Rulemaking

On April 29, 2008, we issued AD 2008–10–10, Amendment 39–15516 (73 FR 25986, May 8, 2008), applicable to certain Model 737–600, –700, –700C, –800, and –900 series airplanes. On December 23, 2009, that AD was revised and reissued as AD 2008–10–10 R1, Amendment 39–16164 (75 FR 1529, January 12, 2010). AD 2008–10–10 R1 requires revising the maintenance program by incorporating new limitations for fuel tank systems to satisfy Special Federal Aviation Regulation (SFAR) No. 88 requirements. That AD also requires an initial inspection to phase in certain repetitive AWL inspections, and repair if necessary. That AD resulted from a design review of the fuel tank systems. We issued that AD to prevent the potential for ignition sources inside fuel tanks caused by latent failures, alterations, repairs, or maintenance actions, which, in combination with flammable fuel vapors, could result in a fuel tank explosion and consequent loss of the airplane.

We have added a new paragraph (o) to this supplemental NPRM specifying that incorporating AWL No. 28–AWL–23 into the maintenance program in accordance with paragraph (g)(3) of AD 2008–10–10 R1 terminates the corresponding action specified in paragraph (k) (specified as paragraph (m) of the original NPRM) of this supplemental NPRM.

Comments

We gave the public the opportunity to comment on the previous NPRM. The following presents the comments received on the NPRM and the FAA's response to each comment.

Support for the NPRM

AirTran Airways supported the NPRM.

Request To Clarify the Scope of the Original NPRM

Boeing requested that we add a statement to the Summary section of the original NPRM specifying that the original NPRM will not be extended to the main wing tanks, as discussed in meetings between Boeing and the Seattle Aircraft Certification Office (ACO), FAA. Boeing stated that the original emergency AD was based on discrepancies in the manufacturing process, and that the original emergency AD was later expanded because inspection of in-service units showed that the units could possibly overheat in service or during manufacture. Boeing further stated that there is no service history of incidents or accidents for the main wing tanks on Model 737–600, –700, –700C, –800, and –900 series airplanes to support the proposed AD action for main tanks as well as center tanks.

We infer that Boeing is referring to certain fuel pump operating restrictions mandated by AD 2002–19–52, Amendment 39–12900 (67 FR 61253, September 30, 2002), that were later mandated by AD 2002–24–51, Amendment 39–12992 (68 FR 10, January 2, 2003), to address an unsafe condition pertaining to fuel pump overheating. (AD 2002–19–52 provided optional terminating action, which, if accomplished, removed certain operating restrictions; AD 2002–24–51 reinstated those operating restrictions because the terminating action provided in AD 2002–19–52 was not effective in eliminating the unsafe condition addressed in AD 2002–24–51—overheating of parts in the priming and vapor section of the fuel pump.) We agree that the requirements of this supplemental NPRM will not be expanded to address the main wing tanks because the fuel pumps for those tanks should never run dry. Since the Summary section of this supplemental NPRM discusses only the center fuel tanks, it is not necessary to revise it. Therefore, we have not changed the supplemental NPRM in this regard.

Request To Issue Separate ADs

KLM Royal Dutch Airlines (KLM) requested that we issue separate ADs for installation of the automatic shutoff system for the center tank fuel boost pumps in accordance with Boeing Alert Service Bulletin 737–28A1206, and installation of the secondary pump control relays in accordance with Boeing Alert Service Bulletin 737–28A1248. KLM stated that combining these modifications makes compliance with the original NPRM very complex for industry.

We disagree with issuing separate ADs. Boeing Alert Service Bulletin 737–28A1206 and Boeing Alert Service Bulletin 737–28A1248 address separate parts of the same unsafe condition (the extended dry running of the pumps) on the same airplanes. We have not changed the supplemental NPRM in this regard.

Request To Clarify Unsafe Condition

Goodrich Corporation (Goodrich) requested that we provide a clear definition of the proposed requirements of the original NPRM regarding the pump/airplane operating limitations. Goodrich pointed out that the stated purpose of the original NPRM is to "prevent" fuel pump operation with "continuous" low pressure, and that the word "prevent" implies that the fuel pumps should never be operated with the inlets uncovered (low pressure). Goodrich stated that it is also unclear as to what "continuous low pressures" means, and that the terms "prevent" and "continuous" seem to conflict. Goodrich also stated that the intent of AD 2002–19–52 and AD 2002–24–51 is to require a predetermined fuel mass in the center tank to ensure that the pumps will never run dry during operation of an airplane, and that the unsafe condition described in the original NPRM seems to conflict with the unsafe condition identified in these ADs. Goodrich asked if the pumps can run dry for 15 seconds, or if they must be shut off as soon as the pump inlets are no longer covered. Goodrich also asked if a momentary uncovering of the inlets is acceptable, due to sudden maneuvers or fuel slosh.

We agree to provide clarification. This supplemental NPRM is intended to prevent the fuel pumps from continuing to run after the tank is empty. The possible ignition source is not dry running by itself, but overheating or sparking that could occur when the pump components are no longer bathed in fuel. Boeing and Hydro-Aire conducted testing that showed the pumps can run at a low pressure condition for significantly longer than 15 continuous seconds without leading to overheating or sparking. Momentary uncovering of the pumps for less than 15 continuous seconds is safe and allowing 15 seconds of continuous pump low-pressure conditions prevents pumps from automatically shutting off during maneuvering or sloshing, which would create unnecessary pilot workload. No change to the supplemental NPRM is necessary in this regard.

Request To Revise the Unsafe Condition

Boeing requested that we clarify the unsafe condition specified in the Summary section and in paragraph (d) of the original NPRM (specified as paragraph (e) of this supplemental NPRM). Boeing stated that the unsafe condition is indicated continuous low pressure when the pump is operated with no fuel available to its inlet, not pump operation with the inlet covered with fuel. Boeing suggested using the following statement:

> We are proposing this AD to prevent center tank fuel pump operation with continuous low pressure (with no fuel passing through the pump), which could lead to friction sparks or overheating in the fuel pump inlet that could create a potential ignition source inside the center fuel tank. These conditions, in combination with flammable fuel vapors, could result in a center fuel tank explosion and consequent loss of the airplane.

We agree that the unsafe condition is present only when there is no fuel available to cover the pump inlet. However, the continuous low pressure condition indicates that the fuel pump inlet may be uncovered, which could result in extended dry running of the fuel pump and possible overheating or sparking. The automatic shutoff system is designed to prevent fuel pump operation with continuous low pressure, and it is not dependent on whether fuel is still passing through the pump. Therefore, we have not added the phrase "with no fuel passing through the pump" to this supplemental NPRM. We have, however, reworded the summary section and paragraph (e) of this supplemental NPRM slightly to specify "* * * overheating in the fuel pump inlet that could create a potential ignition source. * * *"

Request to Revise Estimated Costs

The Air Transport Association (ATA), on behalf of its member Delta Air Lines (DAL), stated that it disagrees with the cost estimates proposed in the original NPRM because the costs do not include the time required to accomplish the initial and repetitive AWL inspections.

We infer that the commenters request we revise the Estimated Costs table in this supplemental NPRM to reflect the cost of accomplishing the initial and repetitive AWL inspections. We disagree, since the initial and repetitive AWL inspections are not directly required by this supplemental NPRM. The cost information provided in this supplemental NPRM describes only the direct costs of the specific actions proposed by this supplemental NPRM. This supplemental NPRM requires only revising the maintenance program to incorporate the AWL inspections, and provides a compliance time to phase in the initial actions. Section 91.403(c) of the Federal Aviation Regulations (14 CFR 91.403(c)) requires the inspections once the maintenance program is changed. Therefore, we have not changed this supplemental NPRM in this regard.

Request To Add Terminating Action

TDG Aerospace, Inc. (TDG) stated that it is currently certifying its universal fault interrupter (UFI) technology for use on Model 737–600, –700, –700C, –800, and –900 series airplanes. TDG, therefore, requested that we revise the original NPRM to allow the installation of its UFI as a means of compliance with the proposed requirements of the original NPRM, if the UFI is approved prior to issuance of the final rule. TDG also stated that the same UFI hardware has already been approved under Supplemental Type Certificate (STC) ST01950LA for Model 757–200 and –300 series airplanes. TDG noted that AD 2008–11–07, Amendment 39–15529 (73 FR 30755, May 29, 2008), presently incorporates TDG's UFI under STC ST01950LA as an approved alternative method of compliance with certain requirements of that AD.

We agree. Since the issuance of the original NPRM, we have evaluated STC ST02076LA and have determined that installing and maintaining TDG Aerospace UFIs in accordance with that STC would also address the unsafe condition addressed in this supplemental NPRM for Model 737–600, –700, –700C, –800, and –900 series airplanes. Therefore, we have added paragraph (s) to this supplemental NPRM to allow installation of STC ST02076LA as a terminating action for paragraphs (g) through (k) of this supplemental NPRM.

Request To Clarify the Applicability of the Original NPRM

Boeing requested that we clarify that the original NPRM would not apply to Model 737–100, –200, –200C, –300, –400, and –500 series airplanes (Model 737 classics). Boeing stated that the "FAA's Determination and Requirements of the Proposed AD" section of the original NPRM discusses the installation of a placard for mixed fleet operations. (In the original NPRM, we stated that placards are necessary only for "mixed fleet operation," which means that some airplanes in an operator's fleet are equipped with automatic shutoff systems while other airplanes are not.) Boeing pointed out that, for many operators, this includes operation of 737 Classic models that are not affected by this supplemental NPRM. Boeing stated that we need to clarify that the placard would be required only on Model 737–600, –700, –700C, –800, and –900 series airplanes (Model 737 Next Generation airplanes).

We agree that placard installation is required only for mixed fleet operation of Model 737 Next Generation airplanes. Paragraph (c) of this supplemental NPRM clearly states that this supplemental NPRM applies to Model 737–600, –700, –700C, –800, and –900 series airplanes. Therefore, we have not changed the supplemental NPRM in this regard.

Request To Incorporate Latest Service Information

Boeing requested that we revise paragraphs (f)(1) and (f)(3) of the original NPRM to account for the information notices against the service bulletins referred to in the original NPRM. Boeing, AirTran Airways, and the ATA, on behalf of its member DAL, noted that both Boeing Alert Service Bulletin 737–28A1206, dated January 11, 2006; and Boeing Alert Service Bulletin 737–28A1248, dated December 21, 2006; have had information notices issued against them since the original NPRM was issued. DAL notes that the information notices specify that they are not FAA-approved and are not intended to be used as the basis for deviation from the approved service bulletins. However, in the absence of revisions to the service bulletins, DAL believed that the AD should include the information in these information notices.

We do not agree to include information notices in this supplemental NPRM. As DAL notes, information notices are not FAA-approved. Therefore, it is inappropriate to refer to an information notice in an AD action. However, we removed the "Service Information References" paragraph from this supplemental NPRM. That paragraph was identified as paragraph (f) in the original NPRM. Instead, we have provided the full service document citations throughout this supplemental NPRM. We have reidentified subsequent paragraphs accordingly.

Request To Extend Compliance Time

KLM and the ATA, on behalf of its member American Airlines, requested that we extend the compliance time specified in paragraph (g) of the original NPRM from 36 months to 72 months to align with their heavy maintenance programs. KLM estimated that the proposed modification will take between 250 and 300 work hours. The commenters stated that the modification will also require extensive "power off

A/C time," and that the only scheduled maintenance that can accommodate this modification is a heavy maintenance check (4C-check), which is scheduled every 72 months by most operators. KLM stated that the proposed 36-month compliance time will force operators to accomplish the modification in an extended light C-check, adding 2–3 days of ground time. The commenters also stated that the proposed compliance time will have a substantial impact on operators, requiring special scheduling and out-of-service time. KLM is convinced that the compliance time can be extended safely, while operating under the condition of AD 2002–24–51 (*i.e.,* maintaining the wet shutoff of the fuel pumps).

We disagree with extending the compliance time proposed in the original NPRM. In developing an appropriate compliance time for this action, we considered the urgency associated with the subject unsafe condition and the practical aspect of accomplishing the required modification within a period of time that corresponds to the normal scheduled maintenance for most affected operators. In consideration of these items, in addition to the unsafe condition being suspected as the cause of fuel tank explosions in 1991 and 2001, we have determined that a 36-month compliance time is necessary to ensure an acceptable level of safety. However, according to the provisions of paragraph (t) of this supplemental NPRM, we may approve requests to adjust the compliance time if the requests include data substantiating that the new compliance time would provide an acceptable level of safety. We have not changed the supplemental NPRM in this regard.

Request To Allow Use of Existing Alternative Methods of Compliance (AMOC)

Boeing requested that we revise the original NPRM to specify that operators may continue using the procedures specified in AD 2002–19–52 and AD 2002–24–51, or the procedures approved as an AMOC for paragraph (b) of AD 2002–24–51 by FAA Approval Letter 140S–03–189, dated June 30, 2003, until an operator has inspected all center tank fuel pumps and modified all airplanes in its fleet. As justification, Boeing stated that the AMOC has already been accepted as a valid means of fulfilling the intent of the original NPRM pending hardware installation.

We agree that the procedures specified in AD 2002–24–51, or the procedures approved by FAA Approval Letter 140S–03–189 as an AMOC to AD 2002–24–51, continue to be acceptable until all airplanes in an operator's fleet are in compliance with all the proposed requirements of this supplemental NPRM.

It should be noted that, although AD 2002–24–51 and AD 2002–19–52 require identical airplane flight manual (AFM) procedures, the unsafe conditions addressed by those ADs are not the same. This supplemental NPRM does not address the unsafe condition addressed by AD 2002–19–52; therefore, it is inappropriate to include alternative procedures for that AD in this supplemental NPRM. We have made no change to the supplemental NPRM in this regard.

Request To Revise the AFM Instructions

Boeing requested that we revise the original NPRM as follows, in order to match the current AFM instructions: (1) Add the title "Center Tank Fuel Pumps" to the limitation in paragraph (j)(1) of the original NPRM (specified as paragraph (i)(3) of this supplemental NPRM), and (2) change "900 kilograms" to "907 kilograms" in the fifth paragraph under the heading "*Defueling and Fuel Transfer*" in paragraph (j)(2) of the original NPRM (specified as paragraph (i)(4) of this supplemental NPRM). Boeing also requested that we replace the words "main tanks" with "center tank" in the third paragraph under the heading "*Defueling and Fuel Transfer*" in paragraph (j)(2) of the original NPRM, in order to correct a typographical error.

For accuracy, we agree with the wording changes provided by Boeing. We have revised paragraphs (i)(3) and (i)(4) of this supplemental NPRM accordingly.

Request To Clarify Requirement for Installing Secondary Control Relays

Boeing requested that we revise the original NPRM to clarify that only one additional secondary control relay must be added to each center tank boost pump control system. Boeing stated that the wording in Boeing Alert Service Bulletin 737–28A1248, dated December 21, 2006, which we referred to in the original NPRM, is incorrect. Boeing also stated that the word "override" should not be used—in order to maintain consistency with Boeing Alert Service Bulletin 737–28A1206 and the nomenclature on the cockpit P5–2 fuel control panel. Boeing also stated that the clarification will be included when Boeing Alert Service Bulletin 737–28A1248 is revised. Boeing requested that the clarification be included in the "Summary," "Relevant Service Information," and "FAA's Determination and Requirements of the Proposed AD," sections and paragraphs (l) and (m) of the original NPRM (paragraphs (j) and (k) of this supplemental NPRM).

We agree to revise the Summary section and paragraphs (j) and (k) of this supplemental NPRM (paragraphs (l) and (m) of the original NPRM) accordingly, for the stated reasons. We have not revised certain other sections of the original NPRM that Boeing referred to because, although those sections do appear in this supplemental NPRM, the text of those sections has been revised to reflect information new or specific to the supplemental NPRM, and no longer contains the text referred to by Boeing.

Request To Delete AWL Revision Requirements From the Original NPRM

KLM and the ATA, on behalf of its member DAL, requested that we remove the proposed requirements from the original NPRM to incorporate AWL No. 28–AWL–19 and No. 28–AWL–23 into the AWL of the ICA. The commenters noted that we issued an NPRM (Docket No. FAA–2007–28384, Directorate Identifier 2006–NM–165–AD) that proposed to require revising the AWL section of the ICA to incorporate the AWL in Subsection F of the Boeing 737–600/700/700C/700IGW/800/900 Maintenance Planning Data (MPD) Document, D626A001–CMR, Revision March 2006. (As explained previously, on April 29, 2008, we issued AD 2008–10–10 mandating that NPRM.) The commenters stated that the original NPRM appears to duplicate the requirements to incorporate AWLs No. 28–AWL–19 and No. 28–AWL–23 into the AWL of the ICA provided in AD 2008–10–10 R1, and that it is more appropriate to require those AWLs in AD 2008–10–10 R1 rather than the newly proposed action.

From the commenters' request and statements, we infer that the commenters requested we delete paragraphs (k) and (m) of the original NPRM (paragraph (k) of this supplemental NPRM). We partially agree.

We agree to delete paragraph (k) of the original NPRM from this supplemental NPRM because the incorporation of AWL No. 28–AWL–19 is currently required by AD 2008–10–10 R1, as pointed out by the commenters. We do not agree to remove paragraph (m) of the original NPRM (paragraph (k) of this supplemental NPRM), because the incorporation of AWL No. 28–AWL–23 is optional in AD 2008–10–10 R1, and therefore that AWL may not have been incorporated into operators' maintenance programs.

We also have added a new paragraph (o) to this supplemental NPRM specifying that incorporating AWL No. 28–AWL–23 into the maintenance program in accordance with paragraph (g)(3) of AD 2008–10–10 R1 terminates the corresponding actions required by paragraph (k) of this supplemental NPRM. No further change to the supplemental NPRM is necessary in this regard.

Explanation of Additional Changes Made to This Supplemental NPRM

We have revised this supplemental NPRM in the following ways:

- We have revised this supplemental NPRM to identify the legal name of the manufacturer as published in the most recent type certificate data sheet for the affected airplane models.
- We revised Note 1 of this supplemental NPRM to clarify that requests for approval of an AMOC with the proposed requirements of this supplemental NPRM should include a description of changes to the required inspections that will ensure the continued operational safety of the airplane.
- We added a new paragraph (d) to this supplemental NPRM to provide the Air Transport Association (ATA) of America subject code 28, Fuel. This code is added to make this supplemental NPRM parallel with other new AD actions. We have reidentified subsequent paragraphs accordingly.
- We added a new Note 2 in this supplemental NPRM to explain that Boeing Alert Service Bulletin 747–28A1206, Revision 2, dated May 21, 2009, refers to Boeing Component Service Bulletin 233A3202–28–03, dated January 12, 2006, as an additional source of guidance for replacing the left and right center boost pump switches with new switches and changing the wiring of the P5–2 fuel control module assembly.
- We revised paragraph (h) in this supplemental NPRM to remove the statement indicating that installing a placard in accordance with paragraph (c) of AD 2002–19–52 is acceptable for the compliance with the requirements of paragraph (h) of this supplemental NPRM. This change was made to eliminate confusion between the requirements of this supplemental NPRM and AD 2002–19–52.
- We added a new Note 3 in this supplemental NPRM to clarify that the AFM limitations required by AD 2002–19–52 continue to be required until the optional terminating actions specified in paragraph (g) of that AD are accomplished.
- We removed paragraph (i) of the original NPRM from this supplemental NPRM. That paragraph would have required operators to modify the P5–2 fuel control module assembly in accordance with Boeing Component Service Bulletin 233A3202–28–03, dated January 12, 2006. However, operators have the option to obtain modified P5–2 assemblies from the supplier, instead of making modifications by themselves. The action we intend to require is the replacement of the P5–2 fuel control module assembly having certain part numbers with the modified P5–2 assembly having new part numbers. Because that action is already provided in the Accomplishment Instructions of Boeing Alert Service Bulletin 737–28A1206, Revision 2, dated May 21, 2009, we have determined that paragraph (i) of the original NPRM is not necessary. We have also removed the corresponding cost for the concurrent requirement proposed in paragraph (i) of the original NPRM from the Costs of Compliance section of this supplemental NPRM.
- We removed all references to the use of "later revisions" of the applicable service information from this AD to be consistent with FAA and Office of the Federal Register policies. We may consider approving the use of later revisions of the service information as an AMOC with this AD, as provided by paragraph (t) of this AD.
- We removed Note 3 of the original NPRM from this supplemental NPRM; that note was redundant to Note 2 of the original NPRM. Instead, Note 4 of this supplemental NPRM addresses all AFM revisions required by this supplemental NPRM.
- We have revised paragraph (k) in this supplemental NPRM (paragraph (m) of the original NPRM) to require revising the maintenance program to include AWL No. 28–AWL–23, instead of revising the Airworthiness Limitations section of the Instructions for Continued Airworthiness. We have also included an initial compliance time of 1 year for doing the actions specified in AWL No. 28–AWL–23.
- We added a new paragraph (l) in this supplemental NPRM to specify that no alternative inspections or inspection intervals may be used unless they are approved as an AMOC. Inclusion of this paragraph in the supplemental NPRM is intended to ensure that the AD-mandated airworthiness limitations changes are treated the same as the airworthiness limitations issued with the original type certificate.
- We added a new paragraph (p) in this supplemental NPRM to specify that accomplishing the actions required by paragraph (g) of this supplemental NPRM terminates the requirements of paragraph (f) of AD 2008–24–51.

FAA's Determination

We are proposing this supplemental NPRM because we evaluated all the relevant information and determined the unsafe condition described previously is likely to exist or develop in other products of these same type designs. Certain changes described above expand the scope of the original NPRM. As a result, we have determined that it is necessary to reopen the comment period to provide additional opportunity for the public to comment on this supplemental NPRM.

Proposed Requirements of the Supplemental NPRM

This supplemental NPRM would require accomplishing the actions specified in the service information described previously.

Explanation of Change to Costs of Compliance

Since issuance of the original NPRM, we have increased the labor rate used in the Costs of Compliance from $80 per work-hour to $85 per work-hour. The Costs of Compliance information, below, reflects this increase in the specified hourly labor rate.

Costs of Compliance

We estimate that this proposed AD affects 685 airplanes of U.S. registry.

We estimate the following costs to comply with this proposed AD:

ESTIMATED COSTS

Action	Labor cost	Parts cost	Cost per product	Number of U.S.-registered airplanes	Cost on U.S. operators
Installation of the automatic shut-off system (Boeing Alert Service Bulletin 737–28A1206).	Between 94 and 117 (depending on airplane configuration) work-hours × $85 per hour = Between $7,990 and $9,945.	Between $22,994 and $30,197 (depending on airplane configuration).	Between $30,984 and $40,142.	538	Between $16,669,392 and $21,596,396.
Placard installation, if necessary	1 work-hour × $85 per hour = $85.	$10	$95	685	$65,075.
AFM revision	1 work-hour × $85 per hour = $85.	None	$85	538	$45,730.
Installation of secondary pump control relays (Boeing Alert Service Bulletin 737–28A1248).	68 work-hours × $85 per hour = $5,780.	$3,274	$9,054	685	$6,201,990.
AWL revision to add 28–AWL–23	1 work-hour × $85 per hour = $85.	None	$85	685	$58,225.

Authority for This Rulemaking

Title 49 of the United States Code specifies the FAA's authority to issue rules on aviation safety. Subtitle I, section 106, describes the authority of the FAA Administrator. "Subtitle VII: Aviation Programs" describes in more detail the scope of the Agency's authority.

We are issuing this rulemaking under the authority described in Subtitle VII, Part A, Subpart III, Section 44701: "General requirements." Under that section, Congress charges the FAA with promoting safe flight of civil aircraft in air commerce by prescribing regulations for practices, methods, and procedures the Administrator finds necessary for safety in air commerce. This regulation is within the scope of that authority because it addresses an unsafe condition that is likely to exist or develop on products identified in this rulemaking action.

Regulatory Findings

We determined that this proposed AD would not have federalism implications under Executive Order 13132. This proposed AD would not have a substantial direct effect on the States, on the relationship between the national Government and the States, or on the distribution of power and responsibilities among the various levels of government.

For the reasons discussed above, I certify this proposed regulation:

(1) Is not a "significant regulatory action" under Executive Order 12866,

(2) Is not a "significant rule" under the DOT Regulatory Policies and Procedures (44 FR 11034, February 26, 1979),

(3) Will not affect intrastate aviation in Alaska, and

(4) Will not have a significant economic impact, positive or negative, on a substantial number of small entities under the criteria of the Regulatory Flexibility Act.

List of Subjects in 14 CFR Part 39

Air transportation, Aircraft, Aviation safety, Incorporation by reference, Safety.

The Proposed Amendment

Accordingly, under the authority delegated to me by the Administrator, the FAA proposes to amend 14 CFR part 39 as follows:

PART 39—AIRWORTHINESS DIRECTIVES

1. The authority citation for part 39 continues to read as follows:

Authority: 49 U.S.C. 106(g), 40113, 44701.

§ 39.13 [Amended]

2. The FAA amends § 39.13 by adding the following new airworthiness directive (AD):

The Boeing Company: Docket No. FAA–2007–28661; Directorate Identifier 2007–NM–013–AD.

Comments Due Date

(a) We must receive comments by April 4, 2011.

Affected ADs

(b) Accomplishing certain requirements of this AD terminates certain requirements of 2001–08–24, Amendment 39–12201; AD 2002–24–51, Amendment 39–12992; and AD 2008–24–51, Amendment 39–15781. AD 2002–19–52, Amendment 39–12900, is affected by this AD.

Applicability

(c) This AD applies to the airplanes identified in paragraphs (c)(1) and (c)(2) of this AD, certificated in any category.

(1) The Boeing Company Model 737–600, –700, –700C, –800, and –900 series airplanes identified in Boeing Alert Service Bulletin 737–28A1206, Revision 2, dated May 21, 2009.

(2) The Boeing Company Model 737–600, –700, –700C, –800, and –900 series airplanes identified in Boeing Alert Service Bulletin 737–28A1248, Revision 2, dated August 28, 2009.

Note 1: This AD requires revisions to certain operator maintenance documents to include new inspections. Compliance with these inspections is required by 14 CFR 91.403(c). For airplanes that have been previously modified, altered, or repaired in the areas addressed by these inspections, the operator may not be able to accomplish the inspections described in the revisions. In this situation, to comply with 14 CFR 91.403(c), the operator must request approval for an alternative method of compliance (AMOC) according to paragraph (t) of this AD. The request should include a description of changes to the required inspections that will ensure the continued operational safety of the airplane.

Subject

(d) Joint Aircraft System Component (JASC)/Air Transport Association (ATA) of America Code 28, Fuel.

Unsafe Condition

(e) This AD was prompted by fuel system reviews conducted by the manufacturer. We are issuing this AD to prevent center tank fuel pump operation with continuous low pressure, which could lead to friction sparks or overheating in the fuel pump inlet that could create a potential ignition source inside the center fuel tank. These conditions, in combination with flammable fuel vapors, could result in a center fuel tank explosion and consequent loss of the airplane.

Compliance

(f) Comply with this AD within the compliance times specified, unless already done.

Installation of Automatic Shutoff System for the Center Tank Fuel Boost Pumps

(g) For airplanes identified in paragraph 1.A.1. of Boeing Alert Service Bulletin 737–28A1206, Revision 2, dated May 21, 2009:

Within 36 months after the effective date of this AD, install an automatic shutoff system for the center tank fuel boost pumps, by accomplishing all of the actions specified in Part 1 and Part 2 of the Accomplishment Instructions of Boeing Alert Service Bulletin 737–28A1206, Revision 2, dated May 21, 2009, except that Figure 1 of this AD must be used in lieu of Sheet 2 of Figure 11 of Boeing Alert Service Bulletin 737–28A1206, Revision 2, dated May 21, 2009. If a placard has been previously installed on the airplane in accordance with paragraph (h) of this AD, the placard may be removed from the flight deck of only that airplane after the automatic shutoff system has been installed. Installing automatic shutoff systems on all airplanes in an operator's fleet, in accordance with this paragraph, terminates the placard installation required by paragraph (h) of this AD for all airplanes in an operator's fleet.

Note 2: Boeing Alert Service Bulletin 737–28A1206, Revision 2, dated May 21, 2009, refers to Boeing Component Service Bulletin 233A3202–28–03, dated January 12, 2006, as an additional source of guidance for replacing the left and right center boost pump switches of the P5–2 fuel control module assembly with new switches and changing the wiring of the P5–2 fuel control module assembly.

BILLING CODE 4910–13–P

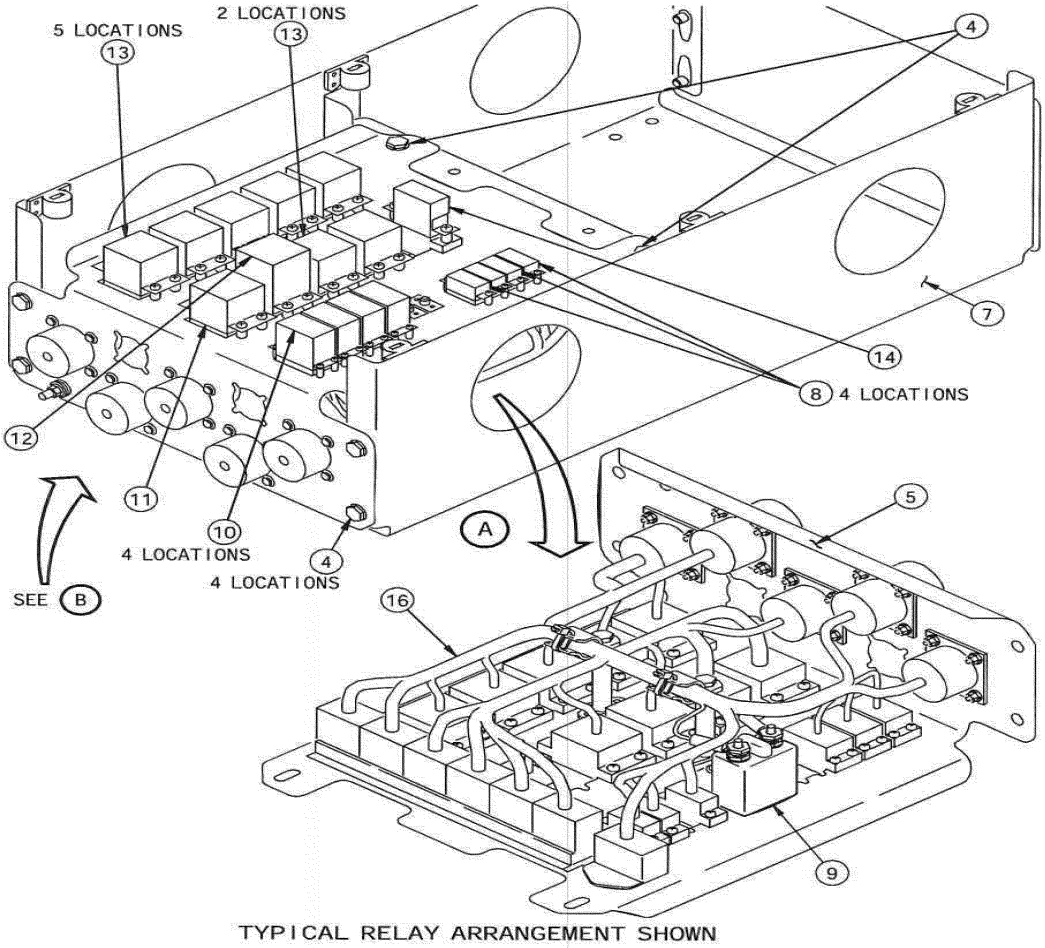

Figure 1

BILLING CODE 4910–13–C

Placard Installation for Mixed Fleet Operation

(h) Prior to or concurrently with installing an automatic shutoff system on any airplane in an operator's fleet, as required by paragraph (g) of this AD, install a placard adjacent to the pilot's primary flight display on all airplanes in the operator's fleet that are not equipped with an automatic shutoff system for the center tank fuel boost pumps. The placard must read as follows (unless alternative placard wording is approved by an appropriate FAA Principal Operations Inspector):

"AD 2002–24–51 fuel usage restrictions required."

Installing an automatic shutoff system, in accordance with paragraph (g) of this AD, terminates the placard installation required by this paragraph for only that airplane. Installing automatic shutoff systems on all airplanes in an operator's fleet, in accordance with paragraph (g) of this AD, terminates the placard installation required by this paragraph for all airplanes in an operator's fleet. If automatic shutoff systems are installed concurrently on all airplanes in an operator's fleet in accordance with paragraph (g) of this AD, or if operation according to the fuel usage restrictions of AD 2002–24–51 is maintained until automatic shutoff systems are installed on all airplanes in an operator's fleet, the placard installation specified in this paragraph is not required.

Airplane Flight Manual (AFM) Revision

(i) For airplanes on which Boeing Alert Service Bulletin 737–28A1206, Revision 2, dated May 21, 2009, has been accomplished: At the applicable time specified in paragraph (i)(1) or (i)(2) of this AD, do the actions specified in paragraphs (i)(3) and (i)(4) of this AD.

(1) For airplanes on which the terminating action specified in paragraph (g) of AD 2002–19–52 has been done: Concurrently with accomplishing the actions required by paragraph (g) of this AD.

(2) For airplanes on which the terminating action specified in paragraph (g) of AD 2002–19–52 has not been done: Concurrently with accomplishing the terminating action specified in paragraph (g) of AD 2002–19–52.

(3) Revise Section 1 of the Limitations section of the Boeing 737–600/–700/–700C/–800/–900 AFM to include the following statement. This may be done by inserting a copy of this AD into the AFM.

"Center Tank Fuel Pumps

Intentional dry running of a center tank fuel pump (low pressure light illuminated) is prohibited."

Note 3: For clarification purposes, the AFM limitations required by AD 2002–19–52 continue to be required until the optional terminating actions specified in paragraph (g) of AD 2002–19–52 have been done.

(4) Revise Section 3 of the Normal Procedures section of the Boeing 737–600/-700/-700C/-800/-900 AFM to include the following statements. This may be done by inserting a copy of this AD into the AFM. Alternative statements that meet the intent of the following requirements may be used if approved by an appropriate FAA Principal Operations Inspector.

"CENTER TANK FUEL PUMPS

Alternative Method of Compliance (AMOC) to AD 2001–08–24 and AD 2002–24–51 for Aircraft with the Automated Center Tank Fuel Pump Shutoff

Center tank fuel pumps must not be "ON" unless personnel are available in the flight deck to monitor low pressure lights.

For ground operation, center tank fuel pump switches must not be positioned "ON" unless the center tank fuel quantity exceeds 1000 pounds (453 kilograms), except when defueling or transferring fuel. Upon positioning the center tank fuel pump switches "ON" verify momentary illumination of each center tank fuel pump low pressure light.

For ground and flight operations, the corresponding center tank fuel pump switch must be positioned "OFF" when a center tank fuel pump low pressure light illuminates [1]. Both center tank fuel pump switches must be positioned "OFF" when the first center tank fuel pump low pressure light illuminates if the center tank is empty.

[1] When established in a level flight attitude, both center tank pump switches should be positioned "ON" again if the center tank contains usable fuel.

Defueling and Fuel Transfer

When transferring fuel or defueling center or main tanks, the fuel pump low pressure lights must be monitored and the fuel pumps positioned to "OFF" at the first indication of the fuel pump low pressure [1].

Defueling the main tanks with passengers on board is prohibited if the main tank fuel pumps are powered [2].

Defueling the center tank with passengers on board is prohibited if the center tank fuel pumps are powered and the auto-shutoff system is inhibited [2].

[1] Prior to transferring fuel or defueling, conduct a lamp test of the respective fuel pump low pressure lights.

[2] Fuel may be transferred from tank to tank or the aircraft may be defueled with passengers on board, provided fuel quantity in the tank from which fuel is being taken is maintained at or above 2000 pounds (907 kilograms)."

Note 4: When statements identical to those in paragraphs (i)(3) and (i)(4) of this AD have been included in the general revisions of the AFM, the general revisions may be inserted into the AFM, and the copy of this AD may be removed from the AFM.

Installation of Secondary Pump Control Relays

(j) For airplanes identified in paragraph 1.A.1. of Boeing Alert Service Bulletin 737–28A1248, Revision 2, dated August 28, 2009: Within 60 months after the effective date of this AD, install one secondary control relay for the electrical control circuit of each of the two center tank fuel boost pumps, in accordance with the Accomplishment Instructions of Boeing Alert Service Bulletin 737–28A1248, Revision 2, dated August 28, 2009.

Airworthiness Limitations (AWL) Revision for AWL No. 28–AWL–23

(k) For airplanes identified in paragraph 1.A.1. of Boeing Alert Service Bulletin 737–28A1248, Revision 2, dated August 28, 2009: Concurrently with accomplishing the actions required by paragraph (j) of this AD, or within 30 days after the effective date of this AD, whichever occurs later, revise the maintenance program by incorporating AWL No. 28–AWL–23 of Subsection G of Section 9 of the Boeing 737–600/700/800/900 MPD Document, D626A001–CMR, Revision July 2010. The initial compliance time for the actions specified in AWL No. 28–AWL–23 is within 1 year after accomplishing the installation required by paragraph (j) of this AD, or within 1 year after the effective date of this AD, whichever occurs later.

No Alternative Inspections or Inspection Intervals

(l) After accomplishing the applicable actions specified in paragraph (k) of this AD, no alternative inspections or inspection intervals may be used unless the inspections or inspection intervals are approved as an AMOC in accordance with the procedures specified in paragraph (t) of this AD.

Terminating Action for AD 2001–08–24, Amendment 39–12201

(m) Accomplishing the actions required by paragraphs (g), (h), and (i) of this AD terminates the requirements of paragraph (a) of AD 2001–08–24, for Model 737–600, –700, –700C, –800, and –900 series airplanes that have the automatic shutoff system installed. After accomplishing the actions required by paragraphs (g), (h), and (i) of this AD, the AFM limitation required by paragraph (a) of AD 2001–08–24 may be removed from the AFM for those airplanes.

Terminating Action for AD 2002–24–51, Amendment 39–12992

(n) Accomplishing the actions required by paragraphs (g), (h), and (i) of this AD terminates the requirements of paragraph (b) of AD 2002–24–51 for Model 737–600, –700, –700C, –800, and –900 series airplanes that have the automatic shutoff system installed. After accomplishing the actions required by paragraphs (g), (h), and (i) of this AD, the AFM limitations required by paragraph (b) of AD 2002–24–51 may be removed from the AFM for those airplanes.

Terminating Action for AWL Revision

(o) Incorporating AWL No. 28–AWL–23 into the maintenance program in accordance with paragraph (g)(3) of AD 2008–10–10 R1, Amendment 39–16164, terminates the corresponding action required by paragraph (k) of this AD.

Terminating Action for AD 2008–24–51

(p) Accomplishing the actions required by paragraph (g) of this AD terminates the requirements of paragraph (f) of AD 2008–24–51.

Credit for Actions Accomplished in Accordance With Previous Service Information

(q) Actions accomplished before the effective date of this AD in accordance with

Boeing Alert Service Bulletin 737–28A1248, dated December 21, 2006; or Boeing Alert Service Bulletin 737–28A1248, Revision 1, dated January 9, 2008; are considered acceptable for compliance with the corresponding actions specified in paragraph (j) of this AD.

(r) Actions accomplished before the effective date of this AD in accordance with Boeing Alert Service Bulletin 737–28A1206, dated January 11, 2006; or Revision 1, dated January 30, 2008; are considered acceptable for compliance with the corresponding actions specified in paragraph (g) of this AD, provided one of the actions specified in paragraph (r)(1) or (r)(2) of this AD have been done.

(1) The procedures specified in paragraph (f) of AD 2008–24–51 have been accomplished.

(2) The actions specified in Part 3 of the Accomplishment Instructions of Boeing Alert Service Bulletin 737–28A1206, Revision 2, dated May 21, 2009, have been accomplished.

Optional Terminating Action

(s) Installing and maintaining TDG Aerospace, Inc., universal fault interrupter (UFI), in accordance with Supplemental Type Certificate (STC) ST02076LA, issued October 26, 2007, terminates the actions required by paragraphs (g) through (k) of this AD; provided that, concurrently with installing a UFI on any airplane in an operator's fleet, a placard is installed adjacent to the pilot's primary flight display on all airplanes in the operator's fleet not equipped with a UFI or an automatic shutoff system. The placard reads as follows, except as provided by paragraph (t) of this AD:

"AD 2002–24–51 fuel usage restrictions required."

Installation of a placard in accordance with paragraph (h) of this AD is acceptable for compliance with the placard installation required by this paragraph. Installing a UFI in accordance with STC ST02076LA on an airplane terminates the placard installation required by this paragraph for only that airplane. Installing UFIs in accordance with STC ST02076LA, or automatic shutoff systems in accordance with paragraph (g) of this AD, on all airplanes in an operator's fleet terminates the placard installation required by this paragraph for all airplanes in an operator's fleet. If operation according to the fuel usage restrictions of AD 2002–24–51 and AD 2001–08–24 is maintained until UFIs or automatic shutoff systems are installed on all airplanes in an operator's fleet, the placard installation specified in this paragraph is not required.

Alternative Methods of Compliance (AMOCs)

(t)(1) The Manager, Seattle Aircraft Certification Office (ACO), FAA, has the authority to approve AMOCs for this AD, if requested using the procedures found in 14 CFR 39.19. In accordance with 14 CFR 39.19, send your request to your principal inspector or local Flight Standards District Office, as appropriate. If sending information directly to the manager of the ACO, send it to the attention of the person identified in the Related Information section of this AD. Information may be e-mailed to: *9-ANM-Seattle-ACO-AMOC-Requests@faa.gov*.

(2) Before using any approved AMOC, notify your appropriate principal inspector, or lacking a principal inspector, the manager of the local flight standards district office/certificate holding district office.

Related Information

(u) For more information about this AD, contact Tak Kobayashi, Aerospace Engineer, Propulsion Branch, ANM–140S, FAA, Seattle Aircraft Certification Office, 1601 Lind Ave., SW., Renton, Washington 98057–3356; *phone:* (425) 917–6499; *fax:* (425) 917–6590; *e-mail: Takahisa.Kobayashi@faa.gov*.

(v) For service information identified in this AD, contact Boeing Commercial Airplanes, *Attention:* Data & Services Management, P.O. Box 3707, MC 2H–65, Seattle, Washington 98124–2207; telephone 206–544–5000, extension 1; fax 206–766–5680; e-mail *me.boecom@boeing.com;* Internet *https://www.myboeingfleet.com*. You may review copies of the referenced service information at the FAA, Transport Airplane Directorate, 1601 Lind Avenue, SW., Renton, Washington. For information on the availability of this material at the FAA, call 425–227–1221.

Issued in Renton, Washington, on February 25, 2011.

Ali Bahrami,

Manager, Transport Airplane Directorate, Aircraft Certification Service.

[FR Doc. 2011–5156 Filed 3–7–11; 8:45 am]

BILLING CODE 4910–13–P

DEPARTMENT OF TRANSPORTATION

Federal Aviation Administration

14 CFR Part 71

[Docket No. FAA–2011–0078; Airspace Docket No. 10–AEA–20]

RIN 2120–AA66

Proposed Establishment of Helicopter Area Navigation (RNAV) Routes; Northeast United States

AGENCY: Federal Aviation Administration (FAA), DOT.

ACTION: Notice of proposed rulemaking (NPRM).

SUMMARY: This action proposes to introduce low altitude helicopter RNAV routes into the United States domestic Air Traffic Service (ATS) route structure to be used by suitably equipped helicopters having IFR-approved Global Positioning System (GPS)/Global Navigation Satellite System (GNSS) equipment. Additionally, the FAA is proposing to establish two such routes in the northeast corridor between the Washington, DC and New York City metropolitan areas. The FAA is proposing this action to enhance safety and to improve the efficient use of the navigable airspace for en route IFR helicopter operations.

DATES: Comments must be received on or before April 22, 2011.

ADDRESSES: Send comments on this proposal to the U.S. Department of Transportation, Docket Operations, M–30, 1200 New Jersey Avenue, SE., West Building Ground Floor, Room W12–140, Washington, DC 20590–0001; telephone: (202) 366–9826. You must identify FAA Docket No. FAA–2011–0078 and Airspace Docket No. 10–AEA–20 at the beginning of your comments. You may also submit comments through the Internet at *http://www.regulations.gov*.

FOR FURTHER INFORMATION CONTACT: Paul Gallant, Airspace, Regulations & ATC Procedures Group, Office of Airspace Services, Federal Aviation Administration, 800 Independence Avenue, SW., Washington, DC 20591; telephone: (202) 267–8783.

SUPPLEMENTARY INFORMATION:

Comments Invited

Interested parties are invited to participate in this proposed rulemaking by submitting such written data, views, or arguments, as they may desire. Comments that provide the factual basis supporting the views and suggestions presented are particularly helpful in developing reasoned regulatory decisions on the proposal. Comments are specifically invited on the overall regulatory, aeronautical, economic, environmental, and energy-related aspects of the proposal.

Communications should identify both docket numbers (FAA Docket No. FAA–2011–0078 and Airspace Docket No. 10–AEA–20) and be submitted in triplicate to the Docket Management System (*see* **ADDRESSES** section for address and phone number). You may also submit comments through the Internet at *http://www.regulations.gov*.

Commenters wishing the FAA to acknowledge receipt of their comments on this action must submit with those comments a self-addressed, stamped postcard on which the following statement is made: "Comments to FAA Docket No. FAA–2011–0078 and Airspace Docket No. 10–AEA–20." The postcard will be date/time stamped and returned to the commenter.

All communications received on or before the specified closing date for comments will be considered before taking action on the proposed rule. The proposal contained in this action may be changed in light of comments received. All comments submitted will

be available for examination in the public docket both before and after the closing date for comments. A report summarizing each substantive public contact with FAA personnel concerned with this rulemaking will be filed in the docket.

Availability of NPRMs

An electronic copy of this document may be downloaded through the Internet at *http://www.regulations.gov*. Recently published rulemaking documents can also be accessed through the FAA's Web page at *http://www.faa.gov/airports_airtraffic/air_traffic/publications/airspace_amendments.*

You may review the public docket containing the proposal, any comments received and any final disposition in person in the Dockets Office (*see* **ADDRESSES** section for address and phone number) between 9 a.m. and 5 p.m., Monday through Friday, except Federal holidays. An informal docket may also be examined during normal business hours at the office of the Eastern Service Center, Operations Support Group, Federal Aviation Administration, Room 210, 1701 Columbia Ave., College Park, GA 30337.

Persons interested in being placed on a mailing list for future NPRMs should contact the FAA's Office of Rulemaking, (202) 267–9677, for a copy of Advisory Circular No. 11–2A, Notice of Proposed Rulemaking Distribution System, which describes the application procedure.

Background

Currently, there are no published, public-use, helicopter-specific IFR RNAV routes in the U.S. National Airspace System (NAS). Helicopter operator representatives have asked the FAA to develop such routes since helicopter flight performance characteristics differ significantly from high performance turboprop and turbojet aircraft. Additionally, published helicopter RNAV routes would increase the safety and efficiency of helicopter operations by affording pilots greater situational awareness and enabling more direct IFR routing. The proposed routes would also make available lower IFR altitudes, which could potentially help helicopters avoid icing conditions during winter operations. Further, TK routes would expand opportunities for helicopter operators to take advantage of developments in Performance Based Navigation technology. TK routes would be designated only within U.S. domestic airspace.

Helicopter RNAV Route Identification and Charting

The proposed helicopter RNAV routes would be identified by the prefix "TK" followed by a three digit number. The "T" prefix is one of several International Civil Aviation Organization (ICAO) designators used to identify domestic RNAV routes. "K" is an ICAO designator used to indicate routes primarily for use by helicopters. The FAA has been allocated the number block 501 through 650 for use in identifying U.S. TK routes.

As with the existing T routes, TK routes would be depicted in blue on the appropriate IFR en route low altitude chart(s). Each route depiction would include the route number along with a Global Navigation Satellite System (GNSS) Minimum Enroute Altitude (MEA) to ensure obstacle clearance and communications reception.

The Proposal

The FAA is proposing an amendment to Title 14, Code of Federal Regulations (14 CFR) part 71 that would establish the first two low altitude IFR helicopter RNAV Routes. The proposed routes would provide more direct routing for IFR helicopters in the northeast corridor between the New York City and Washington, DC, metropolitan areas. The routes would serve New York City, Philadelphia, Baltimore and Washington, DC area airports/heliports. The proposed routes would begin and end at points air traffic control uses for routing helicopters. The new helicopter RNAV routes, as described below, would be designated TK–502 and TK–504, and would be depicted on the appropriate IFR Enroute Low Altitude charts. Only RNAV-equipped helicopters capable of filing flight plan equipment suffix "G" could file for the TK routes. The TK routes are being proposed to enhance safety and to facilitate the more flexible and efficient use of the navigable airspace for en route IFR helicopter operations.

The FAA has determined that this proposed regulation only involves an established body of technical regulations for which frequent and routine amendments are necessary to keep them operationally current. Therefore, this proposed regulation: (1) Is not a "significant regulatory action" under Executive Order 12866; (2) is not a "significant rule" under Department of Transportation (DOT) Regulatory Policies and Procedures (44 FR 11034; February 26, 1979); and (3) does not warrant preparation of a regulatory evaluation as the anticipated impact is so minimal. Since this is a routine matter that will only affect air traffic procedures and air navigation, it is certified that this proposed rule, when promulgated, will not have a significant economic impact on a substantial number of small entities under the criteria of the Regulatory Flexibility Act.

The FAA's authority to issue rules regarding aviation safety is found in Title 49 of the United States Code. Subtitle I, Section 106 describes the authority of the FAA Administrator. Subtitle VII, Aviation Programs, describes in more detail the scope of the agency's authority. This rulemaking is promulgated under the authority described in Subtitle VII, Part A, Subpart I, Section 40103. Under that section, the FAA is charged with prescribing regulations to assign the use of the airspace necessary to ensure the safety of aircraft and the efficient use of airspace. This regulation is within the scope of that authority as it modifies the route structure as required to preserve the safe and efficient flow of air traffic.

Environmental Review

The FAA has determined that this action qualifies for categorical exclusion under the National Environmental Policy Act in accordance with FAA Order 1050.1E, Environmental Impacts: Policies and Procedures, paragraph 311a. This airspace action is not expected to cause any potentially significant environmental impacts, and no extraordinary circumstances exist that warrant preparation of an environmental assessment.

List of Subjects in 14 CFR Part 71

Airspace, Incorporation by reference, Navigation (air).

The Proposed Amendment

In consideration of the foregoing, the Federal Aviation Administration proposes to amend 14 CFR part 71 as follows:

PART 71—DESIGNATION OF CLASS A, B, C, D, AND E AIRSPACE AREAS; AIR TRAFFIC SERVICE ROUTES; AND REPORTING POINTS

1. The authority citation for part 71 continues to read as follows:

Authority: 49 U.S.C. 106(g), 40103, 40113, 40120; E.O. 10854, 24 FR 9565, 3 CFR, 1959–1963 Comp., p. 389.

§ 71.1 [Amended]

2. The incorporation by reference in 14 CFR 71.1 of FAA Order 7400.9T, Airspace Designations and Reporting Points, dated August 18, 2010 and effective September 15, 2010, is amended as follows:

Paragraph 6012 Helicopter area navigation routes [new].

* * * * *

TK–502 Westminster (EMI), MD to DECKR, PA [New]

Westminster (EMI), MD VORTAC
(Lat. 39°29′42″ N., long. 76°58′43″ W.)
TAYLO, MD WP
(Lat. 39°39′48″ N., long. 76°27′43″ W.)
WINGO, PA WP
(Lat. 39°45′59″ N., long. 76°06′56″ W.)
SINON, PA WP
(Lat. 40°02′14″ N., long. 75°34′46″ W.)
GRIBL, PA WP
(Lat. 40°14′30″ N., long. 74°53′31″ W.)
TOLAN, NJ WP
(Lat. 40°21′58″ N., long. 74°25′23″ W.)
BALDE, NJ WP
(Lat. 40°28′42″ N., long. 74°11′33″ W.)
SPATE, NY WP
(Lat. 40°31′22″ N., long. 74°07′30″ W.)
DECKR, NY WP
(Lat. 40°39′07″ N., long. 74°02′42″ W.)

* * * * *

TK–504 RUSEY, MD to BANKA, NJ [New]

RUSEY, MD WP
(Lat. 39°16′07″ N., long. 76°11′19″ W.)
CIDOB, MD WP
(Lat. 39°25′47″ N., long. 75°58′43″ W.)
HAMOR, PA WP
(Lat. 39°51′21″ N., long. 75°47′17″ W.)
ARCUM, PA WP
(Lat. 40°01′26″ N., long. 75°20′54″ W.)
TULLY, PA WP
(Lat. 40°10′38″ N., long. 74°51′48″ W.)
BORKE, NJ WP
(Lat. 40°10′12″ N., long. 74°22′32″ W.)
BANKA, NJ WP
(Lat. 40°22′53″ N., long. 74°03′04″ W.)

Issued in Washington, DC, on March 2, 2011.

Rodger A. Dean,

Acting Manager, Airspace, Regulations and ATC Procedures Group.

[FR Doc. 2011–5251 Filed 3–7–11; 8:45 am]

BILLING CODE 4910–13–P

DEPARTMENT OF TRANSPORTATION

Federal Aviation Administration

14 CFR Part 71

[Docket No. FAA–2010–0813; Airspace Docket No. 09–AEA–12]

RIN 2120–AA66

Proposed Revocation of VOR Federal Airway V–284; New Jersey

AGENCY: Federal Aviation Administration (FAA), DOT.

ACTION: Notice of proposed rulemaking (NPRM); withdrawal.

SUMMARY: The FAA is withdrawing the Notice of proposed rulemaking published in the **Federal Register** on September 3, 2010, to remove VHF omnidirectional range (VOR) Federal airway V–284, which extends between Sea Isle, NJ and Cedar Lake, NJ. Upon further consideration, the FAA has determined that an operational requirement for the airway still exists; therefore, withdrawal of the proposed rule is warranted.

DATES: Effective date 0901 UTC, March 8, 2011. The Director of the Federal Register approves this incorporation by reference action under 1 CFR part 51, subject to the annual revision of FAA Order 7400.9 and publication of conforming amendments.

FOR FURTHER INFORMATION CONTACT: Paul Gallant, Airspace, Regulations and ATC Procedures Group, Office of Airspace Services, Federal Aviation Administration, 800 Independence Avenue, SW., Washington, DC 20591; telephone: (202) 267–8783.

SUPPLEMENTARY INFORMATION:

History

On September 3, 2010, the FAA published in the **Federal Register** an NPRM proposing to amend Title 14, Code of Federal Regulations (14 CFR) part 71 by removing VOR Federal Airway V–284 (75 FR 54058), Docket No. FAA–2010–0813. Interested parties were invited to participate in this rulemaking effort by submitting written comments on the proposal. Four comments were received.

Discussion of Comments

The Aircraft Owners and Pilots Association and three individuals submitted comments on the proposal. All commenters opposed the removal of V–284. The commenters stated that revocation of V–284 would reduce efficiency of operations for non-Global Positioning System equipped aircraft transiting the Delaware-New Jersey-New York City-Philadelphia areas. For such aircraft, the VOR Federal airway system remains the primary means of navigation for Instrument Flight Rules operations. The commenters also indicated that the elimination of this convenient and viable route could require pilots to deviate from their desired course, adding flight time and expense to their operations.

FAA's Conclusions

Upon further consideration, we have determined that the removal of V–284 is not warranted at this time. Therefore, the NPRM is withdrawn.

List of Subjects in 14 CFR Part 71

Airspace, Incorporation by reference, Navigation (air).

The Withdrawal

Accordingly, pursuant to the authority delegated to me, the FAA withdraws the NPRM published in the **Federal Register** on September 3, 2010 (75 FR 54058) [FR Doc. 2010–22007].

Authority: 49 U.S.C. 106(g), 40103, 40113, 40120; E.O. 10854; 24 FR 9565, 3 CFR, 1959–1963 Comp., p. 389.

Issued in Washington, DC, on March 2, 2011.

Rodger A. Dean,

Acting Manager, Airspace, Regulations and ATC Procedures Group.

[FR Doc. 2011–5244 Filed 3–7–11; 8:45 am]

BILLING CODE 4910–13–P

SECURITIES AND EXCHANGE COMMISSION

17 CFR Part 242

[Release No. 34–64018; File No. S7–27–10]

RIN 3235–AK74

Ownership Limitations and Governance Requirements for Security-Based Swap Clearing Agencies, Security-Based Swap Execution Facilities, and National Securities Exchanges With Respect to Security-Based Swaps Under Regulation MC

AGENCY: Securities and Exchange Commission.

ACTION: Proposed rule; reopening of comment period.

SUMMARY: The Securities and Exchange Commission ("Commission") is reopening the period for public comment on proposed Regulation MC under the Securities Exchange Act of 1934 ("Exchange Act"), which is designed to mitigate potential conflicts of interest at clearing agencies that clear security-based swaps ("security-based swap clearing agencies"), security-based swap execution facilities ("SB SEFs"), and national securities exchanges that post or make available for trading security-based swaps ("SBS exchanges"). The proposal was originally published in Securities Exchange Act Release No. 63107 (October 14, 2010), 75 FR 65882 (October 26, 2010) ("Regulation MC Proposing Release"). The Commission is reopening the period for public comment to solicit further comment on Regulation MC in light of other more recent proposed rulemakings that concern conflicts of interest at security-based swap clearing agencies and SB SEFs.

DATES: Comments should be received on or before April 29, 2011.

ADDRESSES: Comments may be submitted by any of the following methods:

Electronic Comments

- Use the Commission's Internet comment form (*http://www.sec.gov/rules/proposed.shtml*); or
- Send an e-mail to *rule-comments@sec.gov*. Please include File No. S7–27–10 on the subject line; or
- Use the Federal eRulemaking Portal (*http://www.regulations.gov*). Follow the instructions for submitting comments.

Paper Comments

- Send paper comments in triplicate to Elizabeth M. Murphy, Secretary, Securities and Exchange Commission, 100 F Street, NE., Washington, DC 20549–1090.

All submissions should refer to File No. S7–27–10. This file number should be included on the subject line if e-mail is used. To help us process and review your comments more efficiently, please use only one method. The Commission will post all comments on the Commission's Internet Web site (*http://www.sec.gov/rules/proposed.shtml*). Comments are also available for Web site viewing and printing in the Commission's Public Reference Room, 100 F Street, NE., Washington, DC 20549, on official business days between the hours of 10 a.m. and 3 p.m. All comments received will be posted without change; we do not edit personal identifying information from submissions. You should submit only information that you wish to make available publicly.

FOR FURTHER INFORMATION CONTACT: *Proposals relating to security-based swap clearing agencies:* Catherine Moore, Senior Special Counsel, at (202) 551–5710; and Joseph P. Kamnik, Special Counsel, at (202) 551–5710, Office of Clearance and Settlement, Division of Trading and Markets, Securities and Exchange Commission, 100 F Street, NE., Washington, DC 20549–7010; *proposals relating to SB SEFs and SBS exchanges:* Nancy J. Burke-Sanow, Assistant Director, at (202) 551–5620; Susie Cho, Special Counsel, at (202) 551–5639; Sarah Schandler, Special Counsel, at (202) 551–7145; Iliana Lundblad, Attorney-Advisor, at (202) 551–5871; and Jasmin Sethi, Attorney-Advisor, at (202) 551–5781, Office of Market Supervision, Division of Trading and Markets, Securities and Exchange Commission, 100 F Street, NE., Washington, DC 20549–7010.

SUPPLEMENTARY INFORMATION:

I. Introduction

The Commission proposed Regulation MC pursuant to Section 765 of the Dodd Frank Wall Street Reform and Consumer Protection Act ("Dodd-Frank Act") to mitigate conflicts of interest with respect to security-based swap clearing agencies, SB SEFs, and SBS exchanges.[1] Section 765(a) of the Dodd-Frank Act provides that the Commission shall adopt rules, which may include numerical limits on the control of, or the voting rights with respect to, any security-based swap clearing agency, or on the control of any SB SEF or SBS exchange, by certain specified entities.[2] Under Section 765(b) of the Dodd-Frank Act, the Commission shall adopt such rules if it determines that they are necessary or appropriate to improve the governance of, or to mitigate systemic risk, promote competition or mitigate conflicts of interest in connection with a security-based swap dealer's or major security-based swap participant's conduct of business with, a security-based swap clearing agency, SB SEF, or SBS exchange and in which such security-based swap dealer or major security-based swap participant has a material debt or equity investment.[3]

In the Regulation MC Proposing Release, the Commission identified conflicts of interest that may arise when a small number of participants, including participants that are Specified Entities, exercise undue control or influence over a security-based swap clearing agency, SB SEF or SBS exchange.[4] To address these potential conflicts of interest, and pursuant to Section 765 of the Dodd-Frank Act, the Commission proposed certain restrictions in Regulation MC with respect to the ownership and voting interests in and the governance of security-based swap clearing agencies, SB SEFs and SBS exchanges. Specifically, the Commission proposed two alternative rules for security-based swap clearing agencies that would impose different degrees of voting and governance restrictions on such entities[5] and one set of rules that would impose ownership and governance limitations on SB SEFs and SBS exchanges.[6]

In the Regulation MC Proposing Release, the Commission sought commenters' views with respect to the identified conflicts of interest and its

[1] The President signed the Dodd-Frank Act (Pub. L. 111–203, H.R. 4173) into law on July 21, 2010.

[2] *See* Public Law 111–203, Section 765(a). The entities specified in Section 765(a) (collectively, "Specified Entities") include a bank holding company with total consolidated assets of $50 billion or more, a nonbank financial company supervised by the Board of Governors of the Federal Reserve System, an affiliate of such bank holding company or nonbank financial company, a security-based swap dealer, a major security-based swap participant, or a person associated with a security-based swap dealer or a major security-based swap participant.

[3] *See* Public Law 111–203, Section 765(b).

[4] Specifically, the Commission noted that these participants, for competitive or commercial reasons, may have an incentive to limit access by other participants to security-based swap clearing agencies, SB SEFs and SBS exchanges; to limit the scope of products cleared through security-based swap clearing agencies or traded on SB SEFs and SBS exchanges; to lower the risk management controls at security-based swap clearing agencies; and to put the commercial interests of the SB SEF or SBS exchange or the SB SEF's or SBS exchange's owners ahead of the SB SEF's or SBS exchange's market oversight responsibilities. *See* Regulation MC Proposing Release, 75 FR at 65884–65893.

[5] Proposed Rule 701(a) of Regulation MC sets forth the "Voting Interest Focus Alternative," which would create a limitation on ownership and voting of voting interests for participants of a security-based swap clearing agency to no more than 20% on an individual basis and, in the aggregate, no more than 40% ("aggregate cap"). Proposed Rule 701(a) would also limit members' participation in the governance of the security-based swap clearing agency by requiring that at least 35% of the security-based swap clearing agency's board of directors ('board") and committees authorized to act on behalf of such board, including the risk committee, be composed of independent directors. The nominating committee of the security-based swap clearing agency's board would be required to be composed of a majority of independent directors. *See* Regulation MC Proposing Release, 75 FR at 65894–65899.

Proposed Rule 701(b) of Regulation MC sets forth the "Governance Focus Alternative," which would create a limitation on ownership of voting interests for participants of a security-based swap clearing agency to no more than 5% on an individual basis but would impose no aggregate cap. Proposed Rule 701(b) would also limit members' participation in the governance of the security-based swap clearing agency by requiring that at least a majority of the security-based swap clearing agency's board and committees authorized to act for such board, including the risk committee, be composed of independent directors. The nominating committee of the security-based swap clearing agency's board would be required to be composed solely of independent directors. *See* Regulation MC Proposing Release, 75 FR at 65899–65903.

[6] Proposed Rule 702(b) of Regulation MC would impose a 20% limitation on ownership and voting of voting interests in a SB SEF or an SBS exchange by each participant of a SB SEF or member of an SBS exchange. Proposed Rules 702(d) and (g) would require that the board of a SB SEF or SBS exchange, any executive committee of such board, and any board committee with the authority to act on behalf of the board, be composed of a majority of independent directors, and proposed Rule 702(f) would require the nominating committee of the board of the SB SEF or SBS exchange to be composed solely of independent directors. Proposed Rule 702(e) would require the board of the SB SEF or SBS exchange to establish a regulatory oversight committee consisting solely of independent directors to oversee the SB SEF's or SBS exchange's regulatory program. Any recommendation of the regulatory oversight committee not adopted by the board of the SB SEF or SBS exchange would be required to be reported promptly to the Commission. Further, proposed Rule 702(h) would require the disciplinary processes of the SB SEF or SBS exchange to provide for compositional balance and to include at least one independent director. *See* Regulation MC Proposing Release, 75 FR at 65904–65912.

proposed rules that are designed to mitigate those conflicts. The public comment period for proposed Regulation MC closed on November 26, 2010. As of March 1, 2011, the Commission has received 100 comment letters relating to proposed Regulation MC.[7] The Commission also received 6 comment letters relating to Section 765 of the Dodd-Frank Act that were received in response to the Commission's general solicitation of comments regarding implementation of the Dodd-Frank Act.[8] These letters were submitted by a broad spectrum of interested parties and reflect a wide array of views regarding the proposed limitations on ownership and voting interests and governance arrangements in proposed Regulation MC.[9] A number of commenters generally supported the Commission's efforts to address conflicts of interest at security-based swap clearing agencies, SB SEFs and SBS exchanges, and many of these commenters favored imposing more restrictive ownership and voting, or governance, requirements than were proposed in Regulation MC.[10] A number of other commenters opposed some or all of the proposed restrictions and questioned whether it is necessary or appropriate for the Commission to adopt rules to mitigate conflicts of interest under Section 765 or whether the Commission should adopt rules without conducting a further review.[11]

On February 2, 2011, the Commission proposed an interpretation of the definition of "security-based swap execution facility," as well as rules relating to the registration and regulation of SB SEFs.[12] The SB SEF Proposing Release includes proposals that are designed, in part, to address conflicts of interest affecting SB SEFs.[13] The SB SEF Proposing Release seeks commenters' views regarding the interaction of proposed Regulation SB SEF with proposed Regulation MC. Specifically, the SB SEF Proposing Release asks commenters, taking into account both proposals, to address whether the proposals contained in proposed Regulation SB SEF would appropriately address conflicts of interest concerns for SB SEFs or whether they should be revised either as unnecessary or insufficient to address such conflicts of interest. The SB SEF Proposing Release also asks commenters to provide their views on whether there any redundancies or gaps for mitigating conflicts of interest for SB SEFs that should be addressed.[14] The public comment period for proposed Regulation SB SEF expires on April 4, 2011.

On March 2, 2011, the Commission proposed rules regarding registration of clearing agencies and standards for the operation and governance of clearing agencies[15] in accordance with Sections 763 and 805 of the Dodd-Frank Act[16] and Section 17A of the Exchange Act.[17] Some of those proposed rules are designed, in part, to address conflicts of interest affecting clearing agencies, including security-based swap clearing agencies.[18] In particular, the Clearing Agency Proposing Release includes proposed rules that would require all clearing agencies to have policies and procedures to identify and address existing or potential conflicts of interest and to establish minimum governance standards for board or board committee members.[19] In addition, the Clearing Agency Proposing Release includes proposed rules that would require clearing agencies to provide opportunity for membership access to persons that are not dealers or security-based swap dealers and persons that have net capital of at least $50 million, while also prohibiting the use of minimum portfolio size and minimum volume transaction thresholds as a condition for membership, in order to decrease the potential for formal membership requirements to be applied anti-competitively.[20] The Clearing Agency Proposing Release seeks commenters' views regarding the interaction between proposed Regulation MC and the mitigation of conflicts provisions reflected in the Clearing Agency Proposing Release. The public comment period for the Clearing Agency Proposing Release closes on April 29, 2011.

When the Commission issued the SB SEF Proposing Release and Clearing

[7] Copies of comments received in response to the Regulation MC Proposing Release are available on the Commission's Internet Web site, located at *http://www.sec.gov/comments/s7-27-10/s72710.shtml*.

[8] Comments were solicited by the Commission at *http://www.sec.gov/spotkight/dodd-frank/clearing-settlement.shtml*. Comments in response to the Commission's general solicitation are available at *http://www.sec.gov/comments/df-title-vii/mandatory-clearing/mandatory-clearing.shtml*. There is no expiration to the comment period for the Commission's general solicitation.

[9] The commenters included individual investors, end-users, members of Congress, the U.S. Department of Justice, State legislators, labor organizations, potential security-based swap dealers and clearing agencies, and potential SBS exchanges or SB SEFs. *See supra* notes 7 and 8.

[10] *See, e.g.,* Letter from U.S. Congressman Stephen F. Lynch, 9th District, Massachusetts (October 18, 2010); Letter from Americans for Financial Reform (November 16, 2010); Letter from Karrie McMillan, General Counsel, Investment Company Institute (November 17, 2010); Letter from Mike Hisler, Co-Founder, The Swaps & Derivatives Market Association (November 26, 2010); and Letter from Christine A. Varney, Assistant Attorney General, U.S. Department of Justice, Antitrust Division (December 28, 2010).

[11] *See, e.g.,* Letters from Roger Liddell, Chief Executive, LCH.Clearnet Group Limited (September 24, 2010 and November 5, 2010); Letter from R. Glenn Hubbard, Co-Chair, John L. Thornton, Co-Chair, and Hal S. Scott, Director, Committee on Capital Markets Regulation (November 15, 2010); Letter from James Hill, Managing Director, Morgan Stanley (November 17, 2010); Letters from Kathleen M. Cronin, Managing Director, General Counsel and Corporate Secretary, CME Group Inc. (November 17, 2010 and November 24, 2010); and Letter from Robert Pickel, Executive Vice Chairman, International Swaps and Derivatives Association, Inc. (November 23, 2010).

[12] Securities Exchange Act Release No. 63825 (February 2, 2011), 76 FR 10948 (February 28, 2011) ("SB SEF Proposing Release").

[13] Specifically, proposed Rule 809 of proposed Regulation SB SEF would require a SB SEF to permit any security-based swap dealer, major security-based swap participant or broker to become a participant of the SB SEF as long as specified objective criteria are met; proposed Rule 811(b) would require a SB SEF to establish fair, objective, and not unreasonably discriminatory standards for granting impartial access to trading on the facility, and would specify that a SB SEF may not unreasonably prohibit or limit any person with respect to access to the services offered by the SB SEF by applying those standards in an unfair or unreasonably discriminatory manner; proposed Rule 811(b) also would require information on any grants, denials or limitations of access by the SB SEF to be reported on Form SB SEF (the proposed registration form for SB SEFs) and in the required annual report of the SB SEF's Chief Compliance Officer; proposed Rule 811(c) would require a SB SEF to establish a compositionally balanced swap review committee to determine the security-based swaps that would trade on the SB SEF, as well as the security-based swaps that should no longer trade on the SB SEF; with respect to the determination regarding whether a particular security-based swap is "made available to trade," that determination would be made pursuant to objective standards to be established by the Commission; and proposed Rule 820 would require that no less than 20% of the total number of directors on the SB SEF's board be representative of SB SEF participants, and that at least one director on the SB SEF's board be representative of investors. *See* SB SEF Proposing Release, *supra* note 12.

[14] *See* SB SEF Proposing Release, *supra* note 12, 76 FR at 10986.

[15] Securities Exchange Act Release No. 64017 (March 2, 2011) ("Clearing Agency Proposing Release").

[16] Public Law 111–203, Sections 763 and 805.

[17] 15 U.S.C. 78q–1.

[18] Specifically, proposed Rule 17Ad–25 under the Exchange Act would require that clearing agencies have policies and procedures to identify and address existing or potential conflicts of interest and to establish minimum governance standards for board or board committee members. Proposed Rules 17Ad–22(c)(5) and (c)(7) under the Exchange Act would require clearing agencies to provide an opportunity for membership access to persons who are not dealers or security-based swap dealers and persons who have net capital of at least $50 million. In addition, Proposed Rule 17Ad–22(c)(6) under the Exchange Act would prohibit the use of minimum portfolio size and minimum volume transaction thresholds as a condition for membership. *See* Clearing Agency Proposing Release, *supra* note 15.

[19] *See* Clearing Agency Proposing Release, *supra* note 15.

[20] *See* Clearing Agency Proposing Release, *supra* note 15.

Agency Proposing Release, it was mindful of its prior proposals under Regulation MC.[21] However, the Commission recognizes that commenters who provided their views and suggestions on proposed Regulation MC did not have the benefit of considering the proposals in the SB SEF Proposing Release and the Clearing Agency Proposing Release, which also seek to address some potential conflicts of interest affecting these entities, when they submitted their comments.

The Commission therefore is reopening the comment period to invite further comment on proposed Regulation MC, particularly in light of the additional proposals relating to mitigation of conflicts for security-based swap clearing agencies and SB SEFs that are contained in the Clearing Agency Proposing Release and SB SEF Proposing Release, respectively.

II. Request for Comment

Commenters are asked to consider the provisions designed to address conflicts of interest in the Regulation MC Proposing Release and in the Clearing Agency Proposing Release and the SB SEF Proposing Release, in the aggregate, when providing further comment on how the Commission should address potential conflicts of interest at security-based swap clearing agencies and SB SEFS, respectively. Are some or all of the proposed requirements in the SB SEF Proposing Release and the Clearing Agency Proposing Release and the requirements in the Regulation MC Proposing Release mutually supportive? Why or why not? Should any of the proposed requirements discussed in the SB SEF Proposing Release, the Clearing Agency Proposing Release, or the Regulation MC Proposing Release relating to conflicts of interest be revised in light of the proposed requirements relating to conflicts of interests in the other releases? If so, which requirements should be revised and how? Are the proposed requirements discussed in the SB SEF Proposing Release, the Clearing Agency Proposing Release, or the Regulation MC Proposing Release relating to conflicts of interest, when considered together, sufficient to mitigate conflicts of interest for SB SEFs, SBS exchanges or security-based swap clearing agencies, or should the Commission consider additional, or alternative, measures? Are any of the proposed requirements discussed in the SB SEF Proposing Release, the Clearing Agency Proposing Release, or the Regulation MC Proposing Release relating to conflicts of interest unnecessary in light of proposed requirements relating to conflicts of interest in the other releases? Why or why not?

Comments may provide the Commission with further insights regarding what mechanisms, if any, may be necessary or appropriate to mitigate conflicts of interest and how the proposed requirements in the three proposals should be evaluated. Commenters should provide specific reasons and information to support their views and recommendations, including an analysis of why a recommendation would satisfy the statutory mandate contained in Section 765 of the Dodd-Frank Act regarding mitigation of conflicts of interest. The Commission asks that commenters, when possible, provide the Commission with empirical data to support their views.

By the Commission.

Dated: March 3, 2011.

Elizabeth M. Murphy,

Secretary.

[FR Doc. 2011–5183 Filed 3–7–11; 8:45 am]

BILLING CODE 8011–01–P

[21] *See* SB SEF Proposing Release, *supra* note 12, at notes 82, 97, 127, 128, 134, 139, 141, 147, 172, 208, 269 and 570 and accompanying text, and 76 FR at 10979 and 10983–10986. *See also* Clearing Agency Proposing Release, *supra* note 15, at notes 45 and 107 and accompanying text.

DEPARTMENT OF LABOR

Mine Safety and Health Administration

30 CFR Parts 70, 71, 72, 75, and 90

RIN 1219–AB64

Lowering Miners' Exposure to Respirable Coal Mine Dust, Including Continuous Personal Dust Monitors

AGENCY: Mine Safety and Health Administration, Labor.

ACTION: Proposed rule; request for comment.

SUMMARY: The Mine Safety and Health Administration (MSHA) is requesting comments on the proposed rule published in the **Federal Register** on October 19, 2010, addressing Lowering Miners' Exposure to Respirable Coal Mine Dust, Including Continuous Personal Dust Monitors. The proposed rule would improve health protections for coal miners by reducing their occupational exposure to respirable coal mine dust and lowering the risk that they will suffer material impairment of health or functional capacity over their working lives.

DATES: All comments must be received or postmarked by midnight Eastern Daylight Saving Time on May 2, 2011.

ADDRESSES: Comments must be identified with "RIN 1219–AB64" and may be sent by any of the following methods:

(1) *Federal e-Rulemaking Portal: http://www.regulations.gov.* Follow the instructions for submitting comments.

(2) *Electronic mail: zzMSHA-comments@dol.gov.* Include "RIN 1219–AB64" in the subject line of the message.

(3) *Facsimile:* 202–693–9441. Include "RIN 1219–AB64" in the subject line of the message.

(4) *Regular Mail:* MSHA, Office of Standards, Regulations, and Variances, 1100 Wilson Boulevard, Room 2350, Arlington, Virginia 22209–3939.

(5) *Hand Delivery or Courier:* MSHA, Office of Standards, Regulations, and Variances, 1100 Wilson Boulevard, Room 2350, Arlington, Virginia. Sign in at the receptionist's desk on the 21st floor.

MSHA will post all comments on the Internet without change, including any personal information provided. Comments can be accessed electronically at *http://www.msha.gov* under the "Rules & Regs" link. Comments may also be reviewed in person at the Office of Standards, Regulations, and Variances, 1100 Wilson Boulevard, Room 2350, Arlington, Virginia. Sign in at the receptionist's desk on the 21st floor.

MSHA will accept written comments and other appropriate information for the record from any interested party. All comments must be received or postmarked by midnight Eastern Daylight Saving Time on May 2, 2011.

MSHA maintains a list that enables subscribers to receive e-mail notification when the Agency publishes rulemaking documents in the **Federal Register**. To subscribe, go to *http://www.msha.gov/subscriptions/subscribe.aspx.*

FOR FURTHER INFORMATION CONTACT: April E. Nelson, Acting Director, Office of Standards, Regulations, and Variances, MSHA, at *nelson.april@dol.gov* (e-mail); 202–693–9440 (voice); or 202–693–9441 (facsimile).

SUPPLEMENTARY INFORMATION:

I. Public Hearings

On October 19, 2010 (75 FR 64412), MSHA published a proposed rule, Lowering Miners' Exposure to Respirable Coal Mine Dust, Including Continuous Personal Dust Monitors. On February 15, 2011, MSHA concluded the last of seven public hearings on the proposed rule. Hearings were held on December 7, 2010, January 11, 13, and 25, 2011, and February 8, 10, and 15, 2011, in Beckley, West Virginia;

Evansville, Indiana; Birmingham, Alabama; Salt Lake City, Utah; Washington, PA; Prestonsburg, Kentucky; and Arlington, VA. Verbatim transcripts of the hearings will be part of the rulemaking record. Transcripts will be available to the public on MSHA's Web site at *http://www.msha.gov* under the "Rules & Regs" link.

II. Request for Comments

The key provisions of the proposed rule would lower the existing concentration limits for respirable coal mine dust, provide for full-shift sampling, redefine the term "normal production shift," provide for use of single shift compliance sampling under the mine operator and MSHA's inspector sampling programs, establish sampling requirements for use of the Continuous Personal Dust Monitor (CPDM), and expand requirements for medical surveillance. The proposed rule is available on MSHA's Web site at *http://www.msha.gov/REGS/FEDREG/PROPOSED/2010Prop/2010-25249.pdf*.

In developing the proposed rule, MSHA relied on the NIOSH Criteria Document (Criteria for a Recommended Standard: Occupational Exposure to Respirable Coal Mine Dust (September 1995)), the Secretary of Labor's Advisory Committee (Report of the Secretary of Labor's Advisory Committee on the Elimination of Pneumoconiosis Among Coal Mine Workers (October 1996)), MSHA'S Quantitative Risk Assessment (QRA), studies in the Health Effects section of the proposed rule, and information and data included in the Preliminary Regulatory Economic Analysis (PREA) in support of the proposal.

MSHA solicits comments on all aspects of the proposed rule and encourages the mining community to review the proposal, including the preamble to the proposed rule, the QRA, and the PREA. The QRA and the PREA are available on MSHA's Web site at *http://www.msha.gov/regsqra.asp* and *http://www.msha.gov/rea.htm*, respectively.

As MSHA has stated throughout the rulemaking, the Agency is interested in information on (1) requests for comments and information that were included in the preamble to the proposed rule, and (2) issues that developed from the proposed rule which were raised during the public hearings. The Agency requests that comments and any alternatives suggested be as specific as possible, and include any technological and economic feasibility data, detailed rationale and supporting documentation, and health benefits to coal miners. Specific and complete information submitted by commenters will enable MSHA to better evaluate the provisions of the proposed rule and produce a final rule that responds to the needs and concerns of the mining community.

1. The proposed rule presents an integrated comprehensive approach for lowering miners' exposure to respirable coal mine dust. The Agency is interested in alternatives to the proposal which would be effective in reducing miners' respirable dust exposure and invites comments on any alternatives.

2. MSHA solicits comments on the proposed respirable dust concentration limits. Please provide alternatives to the proposed limits to be considered in developing the final rule, including specific suggested limits and your rationale.

3. The proposed rule bases the proposed respirable dust standards on an 8-hour work shift and a 40-hour workweek. In its 1995 *Criteria Document on Occupational Exposure to Respirable Coal Mine Dust,* the National Institute for Occupational Safety and Health (NIOSH) recommended lowering exposure to 1.0 mg/m^3 for each miner for up to a 10-hour work shift during a 40-hour workweek. MSHA solicits comments on the NIOSH recommendation.

4. MSHA included the proposed phase-in periods for the proposed lower respirable dust standards to provide sufficient time for mine operators to implement or upgrade engineering or environmental controls. MSHA solicits comments on alternative timeframes and factors that the Agency should consider. Please include any information and detailed rationale.

5. In the proposal, MSHA also plans to phase in the use of Continuous Personal Dust Monitors (CPDMs) to sample production areas of underground mines and Part 90 miners. MSHA solicits comments on the proposed phasing in of CPDMs, including time periods and any information with respect to their availability. If shorter or longer timeframes are recommended, please provide the rationale.

6. MSHA has received a number of comments about the use of the CPDM. For operators who have used this device, MSHA is interested in receiving information related to its use. For example, MSHA is interested in information related to the durability of the unit, whether and how often the unit had to be repaired, type of repair, cost of repair, whether the repair was covered under warranty, how long the unit was unavailable, and any additional relevant information.

7. MSHA understands that some work shifts are longer than 12 hours, and that dust sampling devices generally last for approximately 12 hours. MSHA solicits comments on appropriate timeframes to switch out sampling devices, Coal Mine Dust Personal Sampler Units (CMDPSUs, *i.e.,* gravimetric samplers) or CPDMs, to ensure continued operation and uninterrupted protection for miners for the entire shift.

8. The proposed single sample provision is based on improvements in sampling technology, MSHA experience, updated data, and comments and testimony from earlier notices and proposals that addressed the accuracy of single sample measurements. The Agency is particularly interested in comments on new information added to the record since October 2003 concerning MSHA's Quantitative Risk Assessment, technological and economic feasibility, compliance costs, and benefits.

9. MSHA is interested in commenters' views on what actions should be taken by MSHA and the mine operator when a single shift respirable dust sample meets or exceeds the Excessive Concentration Value (ECV). In this situation, if operators use a CPDM, what alternative actions to those contained in the proposed rule would you suggest that MSHA and the operator take? MSHA is particularly interested in alternatives to those in the proposal and how such alternatives would be protective of miners.

10. A commenter at a public hearing requested clarification on whether there would be more than one violation of the respirable dust limit if a single, full-shift sample exceeded the ECV during the same week that the weekly permissible accumulated exposure (WPAE) limit were exceeded. Under the proposed rule, it would be a violation for each occurrence that the ECV or WPAE is exceeded. MSHA is interested in comments and alternatives to the proposed rule. Comments should be specific, and include a detailed rationale and how any recommendations and alternatives would protect miners.

11. The proposal includes a revised definition of normal production shift so that sampling is taken during shifts that reasonably represent typical production and normal mining conditions on the MMU. The Agency requests comments on whether the average of the most recent 30 production shifts specified in the proposed definition would be representative of dust levels to which miners are typically exposed.

12. The proposed sampling provisions address interim use of supplementary controls when all feasible engineering or environmental controls have been used but the mine operator is unable to maintain compliance with the dust standard. With MSHA approval, operators could use supplementary controls, such as rotation of miners, or alteration of mining or of production schedules, in conjunction with CPDMs to monitor miners' exposures. MSHA solicits comments on this proposed approach and any suggested alternatives, as well as the types of supplementary controls that would be appropriate to use on a short-term basis.

13. The proposed rule addresses (1) which occupations must be sampled using CPDMs, and (2) which work positions and areas could be sampled using either CPDMs or CMDPSUs. MSHA solicits comments on the proposed sampling occupations and locations. For example, please comment on whether there are other positions or areas where it may be appropriate to require the use of CPDMs. Also, comment on whether the proposed CPDM sampling of ODOs on the MMU is sufficient to address different mining techniques, potential overexposures, and ineffective use of approved dust controls.

14. Some commenters have suggested that, for compliance purposes, respirable dust samples should be taken only on individual miners in underground coal mines. Under the existing rule, MSHA enforces an environmental standard, that is, the Agency samples the average concentration of respirable dust in the mine atmosphere. The proposed rule would continue the existing practice that samples be collected from designated high-risk occupations associated with respirable dust exposure and from designated areas associated with dust generation sources in underground mines. MSHA solicits comments on the sampling strategy in the proposed rule, any specific alternatives, supporting rationale, and how such alternatives would protect miners' health.

15. The proposed rule addresses the frequency of respirable dust sampling when using a CPDM. MSHA solicits comments on the proposed sampling frequencies and any suggested alternatives. For example, if sampling of DOs were less frequent than proposed, what alternative sampling frequency would be appropriate? Please address a sampling strategy in case of noncompliance with the respirable dust standard and provide rationale. Also, should CPDM sampling of ODOs be more or less frequent than 14 calendar days each quarter? Please be specific in suggesting alternatives and include supporting rationale.

16. The proposal would require that persons certified in dust sampling or maintenance and calibration retake the applicable MSHA examination every 3 years to maintain certification. Under the proposal, these certified persons would not have to retake the proposed MSHA course of instruction. MSHA solicits comments on this approach to certification; please include specific rationale for any suggested alternatives.

17. In the proposal, MSHA would require that the CPDM daily sample and error data file information be submitted electronically to the Agency on a weekly basis. MSHA solicits comments on suggested alternative timeframes, particularly in light of the CPDM's limited memory capacity of about 20 shifts.

18. The proposal contains requirements for posting information on sampling results and miners' exposures on the mine bulletin board. MSHA solicits comments on the lengths of time proposed for posting data. If a standard format for reporting and posting data were developed, what should it include?

19. The periodic medical surveillance provisions in the proposed rule would require operators to provide an initial examination to each miner who begins work at a coal mine for the first time and then at least one follow-up examination after the initial examination. MSHA solicits comments on the proposed requirements and time periods specified for these examinations.

20. The proposed respirator training requirements are performance-based and the time required for respirator training would be in addition to that required under part 48. Under the proposal, mine operators could, however, integrate respirator training into their part 48 training schedules. The proposal would require that operators keep records of training for 2 years. Please comment on the Agency's proposed approach.

21. The proposed rule specifies procedures and information to be included in CPDM plans to ensure miners are not exposed to respirable dust concentrations that exceed proposed standards. For example, the proposed plan would include pre-operational examination, testing and set-up procedures to verify the operational readiness of the CPDM before each shift. It would also include procedures for scheduled maintenance, downloading and transmission of sampling information, and posting of reported results. Please comment on the proposed plan provisions and include supporting rationale.

22. MSHA has received comments that some aspects of the proposed rule may not be feasible for particular mining applications. MSHA is interested in receiving comments on the specific mining methods that may be impacted and alternative technologies and controls that would protect miners.

23. MSHA has received comments on proposed section 75.332(a)(1) concerning the use of "fishtail" ventilation to provide intake air to multiple MMUs. Commenters were concerned that, under the proposed rule, the practice of using fishtail ventilation with temporary ventilation controls would not be allowed. MSHA solicits comments on any specific impact of the proposed rule on current mining operations, any suggested alternatives, and how the alternatives would be protective of miners.

24. The Agency has prepared a PREA, which contains supporting cost and benefit data for the proposed rule. MSHA has included a discussion of the costs and benefits in the preamble. MSHA requests comments on all estimates of costs and benefits presented in the preamble and the PREA, including compliance costs, net benefits, and approaches used and assumptions made in the PREA. The PREA is available on MSHA's Web site at *http://www.msha.gov/rea.htm.*

25. Commenters have discussed epidemiological studies and data on coal mine dust exposure presented in the preamble to the proposed rule. MSHA solicits comments regarding studies and data, and requests that commenters be as specific as possible. Please identify the studies and data commented upon, provide detailed rationales for the comments, and include any relevant information and data that will help MSHA evaluate the comments.

26. MSHA has received comments that the proposed rule should not require mine operators to record corrective actions or excessive dust concentrations as section 75.363 hazardous conditions. MSHA would like to clarify that the proposal would require that operators record both excessive dust concentrations and corrective actions in the same manner as conditions are recorded under section 75.363. However, MSHA would not consider excessive dust concentrations or corrective actions to be hazardous conditions, since the proposed requirement is not a section 75.363 required record.

27. A commenter at the first public hearing suggested that the timeframe for miners' review of the CPDM Performance Plan be expanded. For clarification, in developing the proposed rule, MSHA relied on the timeframe and process in the existing requirements for mine ventilation plans. In the proposal, MSHA did not intend to change the existing timeframe and process and stated that the proposed rule is consistent with ventilation plan requirements and would allow miners' representatives the opportunity to meaningfully participate in the process.

Dated: March 2, 2011.

Joseph A. Main,

Assistant Secretary of Labor for Mine Safety and Health.

[FR Doc. 2011–5127 Filed 3–7–11; 8:45 am]

BILLING CODE 4510–43–P

ENVIRONMENTAL PROTECTION AGENCY

40 CFR Part 52

[EPA–R10–OAR–2011–0035, FRL–9276–6]

Approval and Promulgation of Implementation Plans; State of Oregon; Regional Haze State Implementation Plan

AGENCY: Environmental Protection Agency (EPA).

ACTION: Proposed rule.

SUMMARY: EPA is proposing to approve a State Implementation Plan (SIP) revision, submitted by the State of Oregon on December 20, 2010, with supplemental information submitted February 1, 2011, as meeting the requirements of Clean Air Act (CAA) section 110(a)(2)(D)(i)(II) as it applies to visibility for the 1997 8-hour ozone and 1997 particulate matter ($PM_{2.5}$) National Ambient Air Quality Standards (NAAQS). EPA is also proposing to approve a portion of the SIP submittal, as meeting certain requirements of the regional haze program, including the Federal regulations for best available retrofit technology (BART).

DATES: Written comments must be received at the address below on or before April 7, 2011.

ADDRESSES: Submit your comments, identified by Docket ID No. EPA–R10–OAR–2011–0035, by one of the following methods:

- *http://www.regulations.gov:* Follow the on-line instructions for submitting comments.
- *E-mail:* Keith Rose at *R10-Public_Comments@epa.gov.*
- *Mail:* Keith Rose, EPA Region 10, Office of Air, Waste and Toxics, AWT–107, 1200 Sixth Avenue, Suite 900, Seattle, WA 98101.
- *Hand Delivery/Courier:* EPA Region 10, 1200 Sixth Avenue, Suite 900, Seattle, WA 98101. *Attention:* Keith Rose, Office of Air, Waste and Toxics, AWT–107. Such deliveries are only accepted during normal hours of operation, and special arrangements should be made for deliveries of boxed information.

Instructions: Direct your comments to Docket ID No. EPA–R10–OAR–2011–0035. EPA's policy is that all comments received will be included in the public docket without change and may be made available online at *http://www.regulations.gov,* including any personal information provided, unless the comment includes information claimed to be Confidential Business Information (CBI) or other information whose disclosure is restricted by statute. Do not submit information that you consider to be CBI or otherwise protected through *http://www.regulations.gov* or e-mail. The *http://www.regulations.gov* Web site is an "anonymous access" system, which means EPA will not know your identity or contact information unless you provide it in the body of your comment. If you send an e-mail comment directly to EPA, without going through *http://www.regulations.gov,* your e-mail address will be automatically captured and included as part of the comment that is placed in the public docket and made available on the Internet. If you submit an electronic comment, EPA recommends that you include your name and other contact information in the body of your comment and with any disk or CD–ROM you submit. If EPA cannot read your comment due to technical difficulties and cannot contact you for clarification, EPA may not be able to consider your comment. Electronic files should avoid the use of special characters, any form of encryption, and be free of any defects or viruses. For additional information about EPA's public docket visit the EPA Docket Center homepage at *http://www.epa.gov/epahome/dockets.htm.*

Docket: All documents in the docket are listed in the *http://www.regulations.gov* index. Although listed in the index, some information is not publicly available (*e.g.,* CBI or other information whose disclosure is restricted by statute). Certain other material, such as copyrighted material, will be publicly available only in hard copy form. Publicly available docket materials are available either electronically at *http://www.regulations.gov* or in hard copy at the Office of Air, Waste and Toxics, EPA Region 10, 1200 Sixth Avenue, Seattle, WA 98101. EPA requests that if at all possible, you contact the individual listed below to view the hard copy of the docket.

FOR FURTHER INFORMATION CONTACT: Mr. Keith Rose at telephone number (206) 553–1949, *rose.keith@epa.gov* or the above EPA, Region 10 address.

SUPPLEMENTARY INFORMATION: Throughout this document whenever "we," "us," or "our" is used, we mean the EPA. Information is organized as follows:

Table of Contents

I. Background for EPA's Proposed Action
A. Definition of Regional Haze
B. Regional Haze Rules and Regulations
C. Roles of Agencies in Addressing Regional Haze
D. Interstate Transport for Visibility
II. Requirements for Regional Haze SIPs
A. The CAA and the Regional Haze Rule
B. Determination of Baseline, Natural, and Current Visibility Conditions
C. Consultation With States and Federal Land Managers
D. Best Available Retrofit Technology
III. EPA's Analysis of Oregon's Regional Haze SIP
A. Affected Class I Areas
B. Baseline and Natural Conditions and Uniform Rate of Progress
C. Oregon Emissions Inventories
D. Sources of Visibility Impairment in Oregon Class I Areas
E. Best Available Retrofit Technology (BART)
IV. EPA's Analysis of Oregon's Regional Haze Rules
V. EPA's Analysis of Whether the Oregon Regional Haze SIP Submittal Meets Interstate Transport Requirements
VI. What action is EPA proposing?
VII. Oregon Notice Provision
VIII. Statutory and Executive Order Reviews

I. Background for EPA's Proposed Action

In the CAA Amendments of 1977, Congress established a program to protect and improve visibility in the national parks and wilderness areas. *See* CAA section 169(A). Congress amended the visibility provisions in the CAA in 1990 to focus attention on the problem of regional haze. *See* CAA section 169(B). EPA promulgated regulations in 1999 to implement sections 169A and 169B of the Act. These regulations require States to develop and implement plans to ensure reasonable progress toward improving visibility in mandatory Class I Federal areas [1] (Class

[1] Areas designated as mandatory Class I Federal areas consist of national parks exceeding 6000 acres, wilderness areas and national memorial parks

Continued

I areas). 64 FR 35714 (July 1, 1999); *see also* 70 FR 39104 (July 6, 2005) and 71 FR 60612 (October 13, 2006).

In this action, EPA is proposing to approve certain provisions of Oregon's Regional Haze SIP submission addressing the requirements for best available retrofit technology (BART), the calculation of baseline and natural visibility conditions, and the statewide inventory of visibility-impairing pollutants. EPA is also proposing to approve the provisions of Oregon's SIP submittal addressing BART as meeting Oregon's obligations under section 110(a)(2)(D)(i)(II) of the CAA for visibility. EPA is not taking action today on those provisions of the Regional Haze SIP submittal related to reasonable progress goals and the long term strategy.

A. Definition of Regional Haze

Regional haze is impairment of visual range or colorization caused by emission of air pollution produced by numerous sources and activities, located across a broad regional area. The sources include but are not limited to, major and minor stationary sources, mobile sources, and area sources including non-anthropogenic sources. Visibility impairment is primarily caused by fine particulate matter ($PM_{2.5}$) or secondary aerosol formed in the atmosphere from precursor gasses (*e.g.,* sulfur dioxide, nitrogen oxides, and in some cases, ammonia and volatile organic compounds). Atmospheric fine particulate reduces clarity, color, and visual range of visual scenes. Visibility-reducing fine particulates are primarily composed of sulfate, nitrate, organic carbon compounds, elemental carbon, and soil dust, and impair visibility by scattering and absorbing light. Fine particulate can also cause serious health effects and mortality in humans, and contributes to environmental effects such as acid deposition and eutrophication.[2]

Data from the existing visibility monitoring network, the "Interagency Monitoring of Protected Visual Environments" (IMPROVE) monitoring network, show that visibility impairment caused by air pollution occurs virtually all the time at most national parks and wilderness areas. Average visual range in many Class I areas in the Western United States is 100–150 kilometers, or about one-half to two-thirds the visual range that would exist without anthropogenic air pollution.[3] Visibility impairment also varies day-to-day and by season depending on variation in meteorology and emission rates.

B. Regional Haze Rules and Regulations

In section 169A of the 1977 CAA Amendments, Congress created a program for protecting visibility in the nation's national parks and wilderness areas. This section of the CAA establishes as a national goal the "prevention of any future, and the remedying of any existing, impairment of visibility in Class I areas which impairment results from manmade air pollution." CAA section 169A(a)(1). On December 2, 1980, EPA promulgated regulations to address visibility impairment in Class I areas that is "reasonably attributable" to a single source or small group of sources, *i.e.,* "reasonably attributable visibility impairment". *See* 45 FR 80084. These regulations represented the first phase in addressing visibility impairment. EPA deferred action on regional haze that emanates from a variety of sources until monitoring, modeling, and scientific knowledge about the relationships between pollutants and visibility impairment were improved.

Congress added section 169B to the CAA in 1990 to address regional haze issues. EPA promulgated a rule to address regional haze on July 1, 1999 (64 FR 35713) (the RHR). The RHR revised the existing visibility regulations to integrate into the regulation provisions addressing regional haze impairment and established a comprehensive visibility protection program for Class I areas. The requirements for regional haze, found at 40 CFR 51.308 and 51.309, are included in EPA's visibility protection regulations at 40 CFR 51.300–309. Some of the main elements of the regional haze requirements are summarized in section III of this rulemaking. The requirement to submit a regional haze SIP applies to all 50 States, the District of Columbia and the Virgin Islands.[4] 40 CFR 51.308(b) requires States to submit the first implementation plan addressing regional haze visibility impairment no later than December 17, 2007.

C. Roles of Agencies in Addressing Regional Haze

Successful implementation of the Regional Haze Program will require long-term regional coordination among States, Tribal governments, and various Federal agencies. As noted above, pollution affecting the air quality in Class I areas can be transported over long distances, even hundreds of kilometers. Therefore, to effectively address the problem of visibility impairment in Class I areas, States need to develop strategies in coordination with one another, taking into account the effect of emissions from one jurisdiction on the air quality in another.

Because the pollutants that lead to regional haze impairment can originate from across State lines, EPA has encouraged the States and Tribes to address visibility impairment from a regional perspective. *Five regional planning organizations*[5] (RPOs) were created nationally to address regional haze and related issues. One of the main objectives of the RPOs is to develop and analyze data and conduct pollutant transport modeling to assist the States or Tribes in developing their regional haze plans.

The Western Regional Air Partnership (WRAP),[6] one of the five RPOs nationally, is a voluntary partnership of State, Tribal, Federal, and local air agencies dealing with air quality in the West. WRAP member States include: Alaska, Arizona, California, Colorado, Idaho, Montana, New Mexico, North Dakota, Oregon, South Dakota, Utah, Washington, and Wyoming. WRAP Tribal members include Campo Band of Kumeyaay Indians, Confederated Salish and Kootenai Tribes, Cortina Indian Rancheria, Hopi Tribe, Hualapai Nation of the Grand Canyon, Native Village of Shungnak, Nez Perce Tribe, Northern Cheyenne Tribe, Pueblo of Acoma, Pueblo of San Felipe, and Shoshone-Bannock Tribes of Fort Hall.

exceeding 5000 acres, and all international parks that were in existence on August 7, 1977. 42 U.S.C. 7472(a). In accordance with section 169A of the CAA, EPA, in consultation with the Department of Interior, promulgated a list of 156 areas where visibility is identified as an important value. 44 FR 69122 (November 30, 1979). The extent of a mandatory Class I area includes subsequent changes in boundaries, such as park expansions. 42 U.S.C. 7472(a). Although States and Tribes may designate as Class I additional areas which they consider to have visibility as an important value, the requirements of the visibility program set forth in section 169A of the CAA apply only to "mandatory Class I Federal areas." Each mandatory Class I Federal area is the responsibility of a "Federal Land Manager." 42 U.S.C. 7602(i). When we use the term "Class I area" in this action, we mean a "mandatory Class I Federal area."

[2] *See* 64 FR at 35715.

[3] *Id.*

[4] Albuquerque/Bernalillo County in New Mexico must also submit a regional haze SIP to completely satisfy the requirements of section 110(a)(2)(D) of the CAA for the entire State of New Mexico under the New Mexico Air Quality Control Act (section 74–2–4).

[5] *See http://www.epa.gov/air/visibility/regional.html* for description of the regional planning organizations.

[6] The WRAP Web site can be found at *http://www.wrapair.org.*

D. Interstate Transport for Visibility

On July 18, 1997, EPA promulgated new NAAQS for 8-hour ozone and for $PM_{2.5}$. 62 FR 38652. Section 110(a)(1) of the CAA requires States to submit a plan to address certain requirements for a new or revised NAAQS within three years after promulgation of such standards, or within such shorter time as EPA may prescribe. Section 110(a)(2) of the CAA lists the elements that such new plan submissions must address, as applicable, including section 110(a)(2)(D)(i), which pertains to the interstate transport of certain emissions.

On April 25, 2005, EPA published a "Finding of Failure to Submit SIPs for Interstate Transport for the 8-hour Ozone and $PM_{2.5}$ NAAQS." 70 FR 21147. This included a finding that Oregon and other States had failed to submit SIPs to address interstate transport of emissions affecting visibility and started a 2-year clock for the promulgation of Federal Implementation Plans (FIPs) by EPA, unless the States made submissions to meet the requirements of section 110(a)(2)(D)(i) and EPA approves such submissions. *Id.*

On August 15, 2006, EPA issued guidance on this topic entitled "Guidance for State Implementation Plan (SIP) Submissions to Meet Current Outstanding Obligations Under section 110(a)(2)(D)(i) for the 8-Hour Ozone and $PM_{2.5}$ National Ambient Air Quality Standards" (2006 Guidance). We developed the 2006 Guidance to make recommendations to States for making submissions to meet the requirements of section 110(a)(2)(D)(i) for the 1997 8-hour ozone standards and the 1997 $PM_{2.5}$ standards.

As identified in the 2006 Guidance, the "good neighbor" provisions in section 110(a)(2)(D)(i) of the CAA require each State to have a SIP that prohibits emissions that adversely affect other States in ways contemplated in the statute. Section 110(a)(2)(D)(i) contains four distinct requirements related to the impacts of interstate transport. The SIP must prevent sources in the State from emitting pollutants in amounts which will: (1) Contribute significantly to nonattainment of the NAAQS in other States; (2) interfere with maintenance of the NAAQS in other States; (3) interfere with provisions to prevent significant deterioration of air quality in other States; or (4) interfere with efforts to protect visibility in other States.

With respect to establishing that emissions from sources in the State would not interfere with measures in other States to protect visibility, the 2006 Guidance recommended that States make a submission indicating that it was premature, at that time, to determine whether there would be any interference with measures in the applicable SIP for another State designed to "protect visibility" until the submission and approval of regional haze SIPs. Regional haze SIPs were required to be submitted by December 17, 2007. *See* 74 FR 2392. At this later point in time, however, EPA believes it is now necessary to evaluate such 110(a)(2)(D)(i) submissions from a State to ensure that the existing SIP, or the SIP as modified by the submission, contains adequate provisions to prevent interference with the visibility programs of other States, such as for consistency with the assumptions for controls relied upon by other States in establishing reasonable progress goals to address regional haze.

The Regional Haze Program, as reflected in the RHR, recognizes the importance of addressing the long-range transport of pollutants for visibility and encourages States to work together to develop plans to address haze. The regulations explicitly require each State to address its "share" of the emission reductions needed to meet the reasonable progress goals for neighboring Class I areas. States, working together through a regional planning process, are required to address an agreed-upon share of their contribution to visibility impairment in the Class I areas of their neighbors. 40 CFR 51.308(d)(3)(ii). Given these requirements, we anticipate that regional haze SIPs will contain measures that will achieve these emissions reductions, and that these measures will meet the requirements of section 110(a)(2)(D)(i).

As a result of the regional planning efforts in the West, all States in the WRAP region contributed information to a Technical Support System (TSS) which provides an analysis of the causes of haze, and the levels of contribution from all sources within each State to the visibility degradation of each Class I area. The WRAP States consulted in the development of reasonable progress goals, using the products of this technical consultation process to co-develop their reasonable progress goals for the Western Class I areas. The modeling done by the WRAP relied on assumptions regarding emissions over the relevant planning period and embedded in these assumptions were anticipated emissions reductions in each of the States in the WRAP, including reductions from BART and other measures to be adopted as part of the State's long term strategy for addressing regional haze. The reasonable progress goals in the draft and final regional haze SIPs that have now been prepared by States in the West accordingly are based, in part, on the emissions reductions from nearby States that were agreed on through the WRAP process.

Oregon submitted a Regional Haze SIP on July 16, 2009 to address the requirements of the RHR. On September 11, 2009, EPA determined that this SIP submission was complete. Oregon submitted a revised Regional Haze SIP on December 20, 2010, replacing the July 2009 submission. On February 1, 2011, Oregon provided EPA additional information to address the requirements of the RHR and the good neighbor provisions of section 110(a)(2)(D)(i)(II)) of the Act, regarding visibility for the 1997 8-hour ozone NAAQS and the 1997 $PM_{2.5}$ NAAQS. EPA has reviewed the submittal and concluded at this time to propose to take action on only certain elements of Oregon's Regional Haze SIP. EPA is required to take final action either to approve Oregon's SIP submittal, or otherwise to take action to meet the requirements of section 110(a)(2)(D)(i)(II) regarding visibility on or before June 21, 2011.[7] EPA is proposing to find that certain elements of Oregon's Regional Haze SIP submittal meet these requirements. In particular, as explained in section V of this action, EPA is proposing to find that the BART measures in Oregon's Regional Haze SIP submittal, which EPA is proposing to approve in this action, will also mean that the Oregon SIP meets the requirements of section 110(a)(2)(D)(i)(II) regarding visibility for the 1997 8-hour ozone and 1997 $PM_{2.5}$ NAAQS.

II. Requirements for Regional Haze SIPs

A. The CAA and the Regional Haze Rule

Regional haze SIPs must assure reasonable progress towards the national goal of achieving natural visibility conditions in Class I areas. Section 169A of the CAA and EPA's implementing regulations require States to establish long-term strategies for making reasonable progress toward meeting this goal. Implementation plans must also give specific attention to certain stationary sources that were in existence on August 7, 1977, but were not in operation before August 7, 1962, and require these sources, where appropriate, to install BART controls for

[7] *Wildearth Guardians* v. *Jackson,* Case No. 4:09–CV–02453–CW (N.D. Calif) (as modified by Jan 14, 2011 Order Granting Motion to Modify Consent Decree).

the purpose of eliminating or reducing visibility impairment. The specific regional haze SIP requirements are discussed in further detail below.

B. Determination of Baseline, Natural, and Current Visibility Conditions

The RHR establishes the deciview (dv) as the principal metric for measuring visibility. This visibility metric expresses uniform changes in haziness in terms of common increments across the entire range of visibility conditions, from pristine to extremely hazy conditions. Visibility is determined by measuring the visual range (or deciview), which is the greatest distance, in kilometers or miles, at which a dark object can be viewed against the sky. The deciview is a useful measure for tracking progress in improving visibility, because each deciview change is an equal incremental change in visibility perceived by the human eye. Most people can detect a change in visibility at one deciview.[8]

The deciview is used in expressing reasonable progress goals (which are interim visibility goals towards meeting the national visibility goal), defining baseline, current, and natural conditions, and tracking changes in visibility. The regional haze SIPs must contain measures that ensure "reasonable progress" toward the national goal of preventing and remedying visibility impairment in Class I areas caused by manmade air pollution by reducing anthropogenic emissions that cause regional haze. The national goal is a return to natural conditions, *i.e.,* anthropogenic sources of air pollution would no longer impair visibility in Class I areas.

To track changes in visibility over time at each of the 156 Class I areas covered by the visibility program (40 CFR 81.401–437), and as part of the process for determining reasonable progress, States must calculate the degree of existing visibility impairment at each Class I area at the time of each regional haze SIP submittal and periodically review progress every five years midway through each 10-year implementation period. To do this, the RHR requires States to determine the degree of impairment (in deciviews) for the average of the 20% least impaired ("best") and 20% most impaired ("worst") visibility days over a specified time period at each of their Class I areas. In addition, States must also develop an estimate of natural visibility conditions for the purpose of comparing progress toward the national goal. Natural visibility is determined by estimating the natural concentrations of pollutants that cause visibility impairment, and then calculating total light extinction based on those estimates. EPA has provided guidance to States regarding how to calculate baseline, natural and current visibility conditions in documents titled, EPA's *Guidance for Estimating Natural Visibility Conditions Under the Regional Haze Rule,* September 2003, (EPA–454/B–03–005 located at *http://www.epa.gov/ttncaaa1/t1/memoranda/rh_envcurhr_gd.pdf*), (hereinafter referred to as "EPA's 2003 Natural Visibility Guidance"), and *Guidance for Tracking Progress Under the Regional Haze Rule* (EPA–454/B–03–004 September 2003 located at *http://www.epa.gov/ttncaaa1/t1/memoranda/rh_tpurhr_gd.pdf*), (hereinafter referred to as "EPA's 2003 Tracking Progress Guidance").

For the first regional haze SIPs that were due by December 17, 2007, "baseline visibility conditions" were the starting points for assessing "current" visibility impairment. Baseline visibility conditions represent the degree of visibility impairment for the 20% least impaired days and 20% most impaired days for each calendar year from 2000 to 2004. Using monitoring data for 2000 through 2004, States are required to calculate the average degree of visibility impairment for each Class I area, based on the average of annual values over the five-year period. The comparison of initial baseline visibility conditions to natural visibility conditions indicates the amount of improvement necessary to attain natural visibility, while the future comparison of baseline conditions to the then-current conditions will indicate the amount of progress made. In general, the 2000–2004 baseline time period is considered the time from which improvement in visibility is measured.

C. Consultation With States and Federal Land Managers

The RHR requires that States consult with Federal Land Managers (FLMs) before adopting and submitting their SIPs. *See* 40 CFR 51.308(i). States must provide FLMs an opportunity for consultation, in person and at least 60 days prior to holding any public hearing on the SIP. This consultation must include the opportunity for the FLMs to discuss their assessment of visibility impairment in any Class I area and to offer recommendations on the development of the reasonable progress goals and on the development and implementation of strategies to address visibility impairment. Further, a State must include in its SIP a description of how it addressed any comments provided by the FLMs. Finally, a SIP must provide procedures for continuing consultation between the State and FLMs regarding the State's visibility protection program, including development and review of SIP revisions, five-year progress reports, and the implementation of other programs having the potential to contribute to impairment of visibility in Class I areas.

D. Best Available Retrofit Technology

Section 169A of the CAA directs States to evaluate the use of retrofit controls at certain larger, often uncontrolled, older stationary sources in order to address visibility impacts from these sources. Specifically, section 169A(b)(2)(A) of the CAA requires States to revise their SIPs to contain such measures as may be necessary to make reasonable progress towards the natural visibility goal, including a requirement that certain categories of existing major stationary sources[9] built between 1962 and 1977 procure, install, and operate the "Best Available Retrofit Technology" as determined by the State. States are directed to conduct BART determinations for such sources that may be anticipated to cause or contribute to any visibility impairment in a Class I area. Rather than requiring source-specific BART controls, States also have the flexibility to adopt an emissions trading program or other alternative program as long as the alternative provides greater reasonable progress towards improving visibility than BART.

On July 6, 2005, EPA published the *Guidelines for BART Determinations Under the Regional Haze Rule* at appendix Y to 40 CFR Part 51 (hereinafter referred to as the "BART Guidelines") to assist States in determining which of their sources should be subject to the BART requirements and in determining appropriate emission limits for each applicable source. In making a BART applicability determination for a fossil fuel-fired electric generating plant with a total generating capacity in excess of 750 megawatts, a State must use the approach set forth in the BART Guidelines. A State is encouraged, but not required, to follow the BART Guidelines in making BART determinations for other types of sources.

States must address all visibility-impairing pollutants emitted by a source

[8] The preamble to the RHR provides additional details about the deciview. 64 FR 35714, 35725 (July 1,1999).

[9] The set of "major stationary sources" potentially subject to BART is listed in CAA section 169A(g)(7).

in the BART determination process. The most significant visibility-impairing pollutants are sulfur dioxide, nitrogen oxides, and fine particulate matter. EPA has indicated that States should use their best judgment in determining whether volatile organic compounds or ammonia compounds impair visibility in Class I areas.

Under the BART Guidelines, States may select an exemption threshold value for their BART modeling, below which a BART-eligible source would not be expected to cause or contribute to visibility impairment in any Class I area. The State must document this exemption threshold value in the SIP and must state the basis for its selection of that value. Any source with emissions that model above the threshold value would be subject to a BART determination review. The BART Guidelines acknowledge varying circumstances affecting different Class I areas. States should consider the number of emission sources affecting the Class I areas at issue and the magnitude of the individual sources' impacts. Generally, an exemption threshold set by the State should not be higher than 0.5 deciview.

In their SIPs, States must identify potential BART sources, described as "BART-eligible sources" in the RHR, and document their BART control determination analyses. The term "BART-eligible source" used in the BART Guidelines means the collection of individual emission units at a facility that together comprises the BART-eligible source. In making BART determinations, section 169A(g)(2) of the CAA requires that States consider the following factors: (1) The costs of compliance, (2) the energy and non-air quality environmental impacts of compliance, (3) any existing pollution control technology in use at the source, (4) the remaining useful life of the source, and (5) the degree of improvement in visibility which may reasonably be anticipated to result from the use of such technology. States are free to determine the weight and significance to be assigned to each factor.

A regional haze SIP must include source-specific BART emission limits and compliance schedules for each source subject to BART. Once a State has made its BART determination, the BART controls must be installed and in operation as expeditiously as practicable, but no later than five years after the date EPA approves the regional haze SIP. CAA section 169(g)(4). 40 CFR 51.308(e)(1)(iv). In addition to what is required by the RHR, general SIP requirements mandate that the SIP must also include all regulatory requirements related to monitoring, recordkeeping, and reporting for the BART controls on the source. States have the flexibility to choose the type of control measures they will use to meet the requirements of BART.

III. EPA's Analysis of Oregon's Regional Haze SIP

A. Affected Class I Areas

There are 12 mandatory Class I areas, or portions of such areas within Oregon: Mt. Hood Wilderness Area, Mt. Jefferson Wilderness Area, Mt Washington Wilderness Area, Kalmiopsis Wilderness Area, Mountain Lakes Wilderness Area, Gearhart Mountain Wilderness Area, Crater Lake National Park, Diamond Peak Wilderness Area, Three Sisters Wilderness Area, Strawberry Mountain Wilderness Area, Eagle Cap Wilderness Area, and Hells Canyon Wilderness Area. Hells Canyon Wilderness Area is shared with the State of Idaho. *See* 40 CFR 81.425. Oregon is responsible for developing reasonable progress goals (RPGs) for these 12 Class I areas. Oregon Department of Environmental Quality (ODEQ) consulted with the appropriate State air quality agency in Washington, Idaho, California, and Nevada to determine Oregon's contribution to haze in neighboring States' Class I areas. *See* chapter 13, section 13.2 of the Oregon Regional Haze SIP submittal. *See* also the WRAP Technical Support Document, February 28, 2011 (WRAP TSD) supporting this action.[10]

B. Baseline and Natural Conditions and Uniform Rate of Progress

Oregon, using data from the IMPROVE monitoring network and analyzed by WRAP, established baseline and natural visibility conditions as well as the uniform rate of progress (URP) to achieve natural visibility conditions by 2064 for all Oregon Class I areas within its borders.

Baseline visibility for the most-impaired (20% worst) days and the least-impaired (20% best) days was calculated from monitoring data collected by IMPROVE monitors. Not every Class I area has an IMPROVE monitor, rather a monitor in a Class I area may represent the air quality and visibility conditions for more than a single Class I area. The Class I areas that are represented by a monitor in a near-by Class I area were determined by the States and the IMPROVE Steering Committee. This decision was based on the Class I areas in a group having the same general visibility conditions. IMPROVE monitors are located in six Oregon Class I areas and represent all 12 Oregon Class I areas. Specifically, the Oregon Class I areas are segregated into six groups. These groups and Class I areas are:

- *North Cascades:* Mt. Hood Wilderness Area.
- *Central Cascades:* Mt. Jefferson, Mt. Washington, and Three Sisters Wilderness Areas.
- *Southern Cascades:* Crater Lake National Park, Diamond Peak, Mountain Lakes, and Gearhart Wilderness Areas.
- *Coast Range:* Kalmiopsis Wilderness Area.
- *Eastern Oregon:* Strawberry Mountain and Eagle Cap Wilderness Areas.
- *Eastern Oregon/Western Idaho:* Hells Canyon Wilderness Area.

In general, WRAP based their estimates of natural conditions on EPA guidance, *Guidance for Estimating Natural Visibility Conditions Under the Regional Haze Program (EPA–45/B–03–0005 September 2003)* but incorporated refinements which EPA believes provides results more appropriate for western States than the general EPA default approach. *See* section 2.D and 2.E of the WRAP TSD, supporting this action.

Visibility on 20% worst days during the 2000–04 baseline period for each group of Oregon Class I areas is:

- North Cascades—14.9 dv
- Central Cascades—15.3 dv
- Southern Cascades—13.7 dv
- Coast Range—15.5 dv
- Eastern Oregon—18.6 dv
- Eastern Oregon/Western Idaho—18.6 dv

Visibility on 20% best days during the 2000–04 baseline period for each group of Oregon Class I areas is:

- North Cascades—2.2 dv
- Central Cascades—3.0 dv
- Southern Cascades—1.7 dv
- Coast Range—6.3 dv
- Eastern Oregon—4.5 dv
- Eastern Oregon/Western Idaho—5.5 dv

Natural visibility conditions on the 20% worst days for each group of Class I areas are:

- Northern Cascades—8.4 dv
- Central Cascades—8.8 dv
- Southern Cascades—7.6 dv
- Coast Range—9.4 dv
- Eastern Oregon—8.9 dv
- Eastern Oregon/Western Idaho –8.3 dv

The 2018 Uniform Rate of Progress (URP) goal for the 20% worst days in each group of Class I areas is:

[10] EPA evaluated the technical work products of the WRAP used by Oregon in support of this Regional Haze SIP submittal. The results of that evaluation are included in the WRAP Technical Support Document.

- North Cascades—13.4 dv
- Central Cascades—13.8 dv
- Southern Cascades—12.3 dv
- Coast Range—14.1 dv
- Eastern Oregon –16.3 dv
- Eastern Oregon/Western Idaho—16.2 dv

Baseline visibility conditions, 2064 natural conditions, and reductions needed to achieve the 2018 URP for the 20% worst days for each group of Oregon Class I areas are identified in table 6–1 of chapter 6 of the Oregon Regional Haze Plan.

Based on our evaluation of the State's baseline and natural conditions analysis, EPA is proposing to find that Oregon has appropriately determined baseline visibility for the average 20% worst and 20% best days, and natural visibility conditions for the average 20% worst days in each Oregon Class I area. *See* sections 2.D and 2.E of the WRAP TSD supporting this action.

C. Oregon Emissions Inventories

There are three main categories of air pollution emission sources: point sources, area sources, and mobile sources. Point sources are larger stationary sources that emit air pollutants. Area sources are large numbers of small sources that are widely distributed across an area, such as residential heating units, re-entrained dust from unpaved roads or windblown dust from agricultural fields. Mobile sources are sources such as motor vehicles, locomotives and aircraft.

EPA's Regional Haze Rule requires a statewide emission inventory of pollutants that are reasonably anticipated to cause or contribute to visibility impairment in any mandatory Class I area. 40 CFR 51.308(d)(4)(v). The WRAP, with data supplied by the States, compiled emission inventories for all major source categories in Oregon and estimated the 2002 baseline year (based on an average of 2000–2004). Oregon also compiled an emission inventory for 2018. Emission estimates for 2018 were generated from anticipated population growth, growth in industrial activity, and emission reductions from implementation of control measures, *e.g.,* implementation of BART limitations and motor vehicle tailpipe emissions.

Chapter 8 of the Oregon Regional Haze SIP submittal discusses how emission estimates were determined for statewide emission inventories by pollutant and source category. Appendix A of the Oregon Regional Haze Plan identifies the Oregon emission inventory by county. Detailed estimates of the emissions used in the modeling conducted by the WRAP for Oregon can be found at the WRAP Web site: *http://vista.cira.colostate.edu/TSS/Results/Emissions.aspx.*

The Oregon Regional Haze SIP submittal identifies total emissions for all visibility-impairing pollutants including sulfur dioxide (SO_2), nitrogen oxides (NO_X), volatile organic compounds (VOC), organic carbon (OC), elemental carbon (EC), other fine particulate ($PM_{2.5}$), coarse particulate matter (PM coarse), and ammonia (NH_3). These emission estimates were partitioned into nine emission source categories: Point source, area source, on-road mobile, off-road mobile, anthropogenic fire (prescribed fire and agricultural field burning), natural fire, road dust, and fugitive dust. *See* chapter 8.1 of the Oregon Regional Haze SIP submittal for additional detail on how the statewide emission inventory was developed, and for tables showing the emissions inventory for each pollutant by source category. The methods that WRAP used to develop these emission inventories are described in more detail in the WRAP TSD. As explained in the WRAP TSD, emissions were calculated using best available data and approved EPA methods. *See* WRAP TSD section 3.

Point sources in Oregon account for 39% (18,493 tons/year) of total State-wide SO_2 emissions. The most significant point sources are coal-fired electrical generation units. Area sources (such as Pacific offshore shipping, wood combustion, and natural gas combustion) contribute about 21% (9,932 tons/year) to Oregon statewide SO_2 emissions. On-road mobile and off-road mobile sources contribute a combined total of 21% (9,981 tons/year) of the Oregon SO_2 emissions. In the Oregon Regional Haze SIP submittal, the State projected SO_2 reductions of 57% in point sources, 15% in area sources, 94% combined reduction in on-road and off-road mobile source emissions, and 17% in anthropogenic fire emissions by 2018 (*see* Chapter 8 of the Oregon Regional Haze Plan).

Upon further review, EPA determined that the 57% reduction in point source emissions was partially based on WRAP's assumption of an SO_2 emission rate of 0.15 lb/mmBtu (presumptive limit for utility boilers identified in the BART Guidelines, *see* Section IV. E.4.) from the PGE Boardman coal fired power plant by 2018. The remaining SO_2 point emission reductions in Oregon would be achieved through ongoing and new industrial control requirements, and projected source retirements and shutdowns. However, the BART determination for PGE Boardman based on a 2020 plant lifetime, which EPA proposes to approve in this rulemaking (*see* section III. E.4 below), achieves an SO_2 emission limit of 0.30 lb/mmBtu by 2018, or about 4,000 ton/year less SO_2 reductions than assumed by WRAP. Thus, statewide point source emission reductions of SO_2 are estimated by EPA to be 35% by 2018. However, if PGE Boardman ceases to burn coal by 2020, as it would under the proposed approved BART determination, there will be an estimated 76% reduction is SO_2 from point sources by 2020 which will provide a substantial improvement at that time in visibility in all 14 Class I areas currently impacted by PGE Boardman.

On-road mobile sources account for 43% (111,646 tons/year) of the total NO_X statewide emissions in Oregon. Off-road mobile sources account for 21% (53,896 tons/year), natural fire accounts for 11% (27,397 tons/year), and point sources account for 10% (26,160 tons/year) of the statewide NO_X emissions. The State expects on-road and off-road mobile source emissions to decline by 62% and 40%, respectively, by 2018, due to Federally mandated emission standards for mobile sources. The State also projects NO_X emissions from point sources will decrease by 5% (or 1,213 tons/year). After evaluating the assumptions on which this 5% reduction was based, it appears that the 5% reduction does not include presumptive NO_X emission reductions from the PGE Boardman facility by 2018. The presumptive NO_X emission limit for utility boilers, like PGE Boardman boiler, is 0.23 lb/mmBtu. EPA BART Guidelines (Section IV (E)(5)). The current NO_X emission limit for the PGE Boardman is 0.43 lb/mmBtu, which results in emissions of about 10,300 tons/year (based on 2007 actual emissions). The BART determination for PGE Boardman based on it ceasing to burn coal by 2020, which EPA proposes to approve in this rulemaking (*see* section III. E.4 below), achieves a NO_X emission limit of 0.23 lb/mmBtu, or annual emissions of about 5,500 tons/year (a 47% reduction) by 2013. Thus, in EPA's estimation, there will be about a 23% reduction in NO_X emissions from all Oregon point sources by 2018. The State expects emissions from natural fire to remain unchanged by 2018. The net effect of these projected emissions results in a 37% overall reduction in NO_X emissions in Oregon by 2018.

Most of the organic carbon emissions in Oregon are from natural fire, which fluctuate greatly from year to year. For 2002, about 68% of statewide organic carbon emissions in Oregon were due to natural fire. Anthropogenic fire

(prescribed fire, agricultural field burning, and outdoor residential burning) accounts for 9% of the statewide organic carbon emissions. A variety of other area sources contribute a total of 19% of the statewide organic carbon, with residential wood combustion being a significant component. The State expects area source emissions to increase slightly (7%) by 2018, due mostly to population increases. The State projects the most significant reductions in organic carbon by 2018 will be from point sources (80%) due to anticipated emission controls, off-road mobile (36%) due to implementation of the Federal mobile source regulations, and anthropogenic fire (28%) due to stricter Oregon rules controlling prescribed burning, agricultural burning, and residential burning. However, because natural fire emissions are expected to remain unchanged, total organic carbon emissions are estimated to decline by only 3% by 2018.

Elemental carbon is associated with incomplete combustion. Like organic carbon, the primary source of elemental carbon in Oregon is natural fire (61%), area sources (such as wood combustion) (15%), and off-road mobile sources (12%). The State projects an increase of elemental carbon area source emissions by 6% due to population growth. Oregon estimates a decrease of combined on-road and off-road mobile source elemental carbon by about 65% by 2018. This reduction in mobile source emissions results from new Federal mobile source emission regulations. However, because elemental carbon emissions are dominated by natural fire, which are expected to remain unchanged, the State projects only an 11% reduction in State wide elemental carbon emissions by 2018.

Other fine particulates, particles with an aerodynamic diameter of less than 2.5 micrometers ($PM_{2.5}$), are emitted directly from a variety of area sources. Area sources are responsible for 34% of all directly-emitted $PM_{2.5}$ emissions in Oregon. Wind-blown dust from agriculture, mining, construction, and roads contribute about 25% to the total statewide $PM_{2.5}$ emissions. The State projects a 12% increase in area source emissions due to population and economic growth, and wind-blown dust emissions to remain unchanged by 2018, resulting in a statewide 2% reduction in total $PM_{2.5}$ by 2018.

Coarse particulate matter (PM coarse) is particulate matter within the size range of 2.5–10 micrometers. PM coarse emission sources include windblown dust, rock crushing and processing, material transfer, and open pit mining. Windblown dust is the dominant source of PM coarse emissions in Oregon at 104,274 tons/year (60%). Statewide PM coarse emissions are estimated to increase by 17% in 2018, primarily because emissions from fugitive dust sources (construction, paved roads, and unpaved roads) are expected to increase 106% due to population growth, and windblown dust will remain unchanged.

Volatile organic compound (VOC) emissions are dominated by biogenic emissions from forests and vegetation, which account for about 70% of statewide Oregon VOC emissions. In Oregon, agricultural crops and urban vegetation are also significant sources. Other sources of VOCs are mobile sources at 8%, and area sources (industrial and commercial facilities, and residential solvent use) at 15%. Oregon projects that statewide area source emissions will increase by 36% by 2018, primarily due to population growth. As a result, the State estimates that total Oregon VOC emissions will increase by 2% by 2018.

Ammonia (NH_3) does not directly impair visibility but can be a precursor to the formation of particulate in the atmosphere through chemical reaction with SO_2 and NO_X to form "secondary aerosol" sulfate and nitrate. About 80% of the NH_3 emissions in Oregon come from agricultural-related activities, primarily livestock operations and farm fertilizer applications. Since the NH_3 emissions from these agricultural sources are expected to remain unchanged by 2018, and mobile source emissions of NH_3 are projected to increase by 45% (1,463 tons/year) by 2018, Oregon projects that there will be a total 2% increase of NH_3 emissions by 2018.

D. Sources of Visibility Impairment in Oregon Class I Areas

Each pollutant species has its own visibility impairing property; 1 $\mu g/m^3$ of sulfate at high humidity, for example, is more effective in scattering light than 1 $\mu g/m^3$ of organic carbon and therefore impairs visibility more than organic carbon. Following the approach recommended by the WRAP, and as explained more fully below, Oregon used a two step process to identify the contribution of each source or source category to existing visibility impairment. First, ambient pollutant concentration by species (such as sulfate, nitrate, organic carbon, and elemental carbon) was determined from the IMPROVE data collected for each group of Class I areas. These concentrations were then converted into deciview values to distribute existing impairment among the measured pollutant species. The deciview value for each pollutant species was calculated by using the "revised IMPROVE equation" (*See* Section 2.C of the WRAP TSD) to calculate extinction from each pollutant species concentration. Extinction, in inverse megameters, was then converted to deciview using the equation defining deciview. Second, the Comprehensive Air Quality Model with Extensions (CAMx) and PM Source Apportionment Technology (PSAT) models were used to determine which sources and source categories contributed to the ambient concentration of each pollutant species. Thus, impairment was distributed by source and source category.

After considering the available models, the WRAP and Western States selected two source apportionment analysis tools. The first source apportionment tool was the Comprehensive Air Quality Model with Extensions (CAMx) in conjunction with PM Source Apportionment Technology (PSAT). This model uses emission source characterization, meteorology and atmospheric chemistry for aerosol formation to predict pollutant concentrations in the Class I area. The predicted results are compared to measured concentrations to assess accuracy of model output. CAMx PSAT modeling was used to determine source contribution to ambient sulfate and nitrate concentrations. The WRAP used state-of-the-science source apportionment tools within a widely used photochemical model. EPA has reviewed the PSAT analysis and considers the modeling, methodology, and analysis acceptable. *See* section 6.A of the WRAP TSD.

The second tool was the Weighted Emissions Potential (WEP) model, used primarily as a screening tool to decide which geographic source regions have the potential to contribute to haze at specific Class I areas. WEP does not account for atmospheric chemistry (secondary aerosol formation) or removal processes, and thus is used for estimating inert particulate concentrations. The model uses back trajectory wind flow calculations and resident time of an air parcel to determine source and source category and location for ambient organic carbon, elemental carbon, $PM_{2.5}$, and coarse PM concentrations. These modeling tools were the state-of-the-science and EPA has determined that these tools were appropriately used by WRAP for regional haze planning. Description of these tools and our evaluation of them

are described in more detail in section 6 of the WRAP TSD.

Section 9.2.1 of the Oregon SIP submittal explains that sources in areas outside of the modeling domain (*i.e.,* portions of northern Canada, southern Mexico, Pacific offshore, and global sources) contribute between 40% to 60% of the sulfate that impairs visibility in all of Oregon's Class I areas on the 20% worst days. SO_2 sources within the WRAP region contribute about 33% of sulfate that impairs visibility in Oregon Class I areas. Of the SO_2 contribution from WRAP States, about 50% of the SO_2 comes from point, area, and mobile sources in Oregon.

The PSAT results also show that between 15 to 33% of the nitrate impairing visibility in all of Oregon's Class I areas comes from sources outside of the modeling domain, with the remainder from sources within the WRAP region.

North and Central Cascades Class I Areas

The PSAT results for sulfate show that for the 20% worst days during 2000–2004 the North and Central Cascades Class I areas are mostly impacted by sulfate from a combination of SO_2 point, area and mobile sources in Washington, Oregon, and marine shipping in the Pacific offshore region (*see* Oregon Regional Haze SIP submittal Figures 9.2.1–1 through Figures 9.2.1–6). The mobile source contribution to sulfate pollution is expected to decline significantly by 2018 due to the implementation of the Federal low sulfur diesel fuel rule, which went into effect in 2006 for on-road mobile sources, and took effect for non-road mobile sources in 2010.

The PSAT results for nitrate show that a majority of the nitrate impacting the North and Central Cascades Class I areas is from mobile sources in Oregon and Washington (*see* Oregon Regional Haze SIP submittal Figures 9.2.2–1 through Figures 9.2.2–6). PSAT results predict about a 50% reduction in nitrate concentrations in these area by 2018 due to a 50% reduction in NO_X emissions from Oregon and Washington mobile sources.

Based on the WEP model results, the organic carbon in the North Cascades on the 20% worst visibility days comes mostly from area sources and natural fires in Oregon, with a small contribution from areas sources in Washington. On the 20% worst visibility days at North Cascades, most of the primary $PM_{2.5}$ contributions come from area and fugitive dust sources in Oregon, and to a lesser extent area and point sources in Washington.

For the 20% worst visibility days in the Central Cascades, most of the organic carbon comes from a combination of area source emissions and natural and anthropogenic fire in Oregon. For the 20% worst visibility days in the Central Cascades, the OC comes primarily from Oregon area sources. For the 20% worst visibility days in the Central Cascades, most of the $PM_{2.5}$ comes from area sources in Oregon.

Southern Cascades Class I Areas

For the 20% worst days in the three Class I areas in the Southern Cascades, overall visibility impairment due to sulfate are lower compared to the Northern and Central Cascade Class I areas. Most of the sulfate impacting these Southern Cascade Class I areas is from point sources in Oregon, Washington, California, and Canada. Pacific offshore shipping is also a substantial contributor of sulfate to this area.

For the 20% worst days in Southern Cascades, the most significant sources of nitrate are mobile sources in Oregon and Washington. The impact from these sources is expected to decrease by about 50% by 2018 due to Federal mobile source emission control measures.

For the 20% worst visibility days in the Southern Cascades, approximately 90% of the organic carbon contribution came from natural fires in 2002. Emissions from natural fires are expected to be unchanged by 2018.

Coast Range Class I Area

The only Class I area in the Coast Range group is the Kalmiopsis Wilderness Area. The most significant sources of sulfate to the Kalmiopsis Wilderness Area are natural fires in Oregon, and marine shipping in the Pacific Ocean. Both of these sources are expected to be unchanged by 2018.

A majority of the nitrate impacting the Kalmiopsis Wilderness Area is from mobile sources in Oregon and from marine shipping in the Pacific Ocean. Smaller contributions come from Washington and California mobile sources. Mobile source contributions to this area are expected to decrease by about 50% by 2018.

For the 20% worst visibility days in the Kalmiopsis Wilderness, almost all of organic carbon for the 2002 base year came from natural fire. For the 20% worst visibility days in the Kalmiopsis, the $PM_{2.5}$ contributions were mostly from natural fire in Oregon.

For the 20% worst days in the Kalmiopsis Wilderness Area, the contribution from point sources is relatively small. For the 20% of worst days in the Kalmiopsis Wilderness Area, the vast majority of nitrate comes from Oregon mobile sources, with smaller contributions from Washington and California mobile sources. There is also a substantial nitrate contribution from Pacific offshore shipping, due primarily to the close proximity of the Kalmiopsis Wilderness Area to the Pacific Ocean.

Eastern Oregon Class I Areas

For the 20% worst days in Strawberry Mountain Wilderness and Eagle Cap Wilderness Areas, the contribution of sulfates from each geographical area is relatively low (less than 0.12 micrograms per cubic meter), with the largest contribution being from point sources from Canada, Washington, and Oregon. However, the visibility on the 20% worst days in this area is significantly impacted (greater than 0.20 micrograms per cubic meter) by a combination of point, area, and mobile NO_X sources in Oregon, Washington, and Idaho.

For the 20% worst visibility days in the Strawberry Mountain Wilderness and Eagle Cap Wilderness Areas, about 80% of the organic carbon contribution came from a combination of natural fires and anthropogenic sources in Oregon. For the 20% worst visibility days there is also a dominant $PM_{2.5}$ contribution from windblown dust, and some fugitive and road dust area and fire sources in Oregon. The contribution of this mixture of source from Washington is about half of the Oregon level.

Eastern Oregon/Western Idaho Class I Area

For the 20% worst days in the Hells Canyon Wilderness Area, the contribution of sulfates from each geographical area is relatively low (less than 0.06 micrograms per cubic meter), with the largest contribution being from point sources from Canada, Idaho, and Oregon. However, the visibility on the 20% worst days in this area is significantly impacted (greater than 0.35 micrograms per cubic meter) by a combination of mobile and area NO_X sources in Idaho, and to a lesser degree, point and mobile sources in Oregon.

For the 20% worst visibility days in the Hells Canyon Wilderness Area, the majority of the organic carbon contribution comes from a combination of Oregon natural and anthropogenic fire sources and to a lesser extent from anthropogenic and natural fire sources in Oregon. For the 20% worst visibility days in the Hells Canyon Wilderness Area, most of the contribution of $PM_{2.5}$ comes from a combination of windblown, fugitive and road dust

sources in Idaho and to a lesser degree, the same mix of sources in Oregon.

EPA is proposing to find that Oregon has appropriately identified the primary pollutants impacting its Class I areas. EPA is also proposing to find that the SIP contains an appropriate analysis of the impact of these pollutants in nearby Class I areas.

E. Best Available Retrofit Technology (BART)

1. BART-Eligible Sources in Oregon

The first step of a BART evaluation is to identify all the BART-eligible sources within the State's boundaries. Table 10.2–1 in the Oregon Regional Haze SIP submittal presents the list of ten BART-eligible sources located in Oregon. These sources are: Amalgamated Sugar (Nyssa), Portland Gas and Electric (PGE) power plant (Boardman), Boise Paper Solutions (St. Helens), Georgia Pacific Wauna pulp mill (Clatskanie), PGE Beaver power plant (Clatskanie), Georgia Pacific pulp mill (Toledo), Pope and Talbot pulp mills (Halsey), SP Newsprint (Newberg), International Paper pulp mill (Springfield), and Kingsford charcoal production (Springfield).

2. BART-Subject Sources in Oregon

The second step of a BART evaluation is to identify those BART-eligible sources that may reasonably be anticipated to cause or contribute to any impairment of visibility at any Class I area and are, therefore, subject to BART. As explained above, EPA has issued guidelines that provide States with guidance for addressing the BART requirements. 40 CFR Part 51 Appendix Y—Guidelines for BART determinations under the regional Haze Rule (BART Guidelines); *see also* 70 FR 39104 (July 6, 2005). The BART Guidelines describe how States may consider exempting some BART-eligible sources from further BART review based on dispersion modeling showing that the source contributes to impairment below a certain threshold amount. Oregon conducted dispersion modeling for the BART-eligible sources to determine the visibility impacts of these sources on Class I areas.

The BART Guidelines require States to set a contribution threshold to assess whether the impact of a single source is sufficient to cause or contribute to visibility impairment at a Class I area. Generally, States may not establish a contribution threshold that exceeds 0.5 dv impact. 70 FR at 39161. Oregon established a contribution threshold of 0.5 dv through negotiated rulemaking with industry, FLMs, and the public. In its SIP submittal, Oregon notes that the 0.5 dv threshold is also consistent with the threshold used by all other States in the WRAP. Any source with an impact of greater than 0.5 dv in any Class I area, including Class I areas in other States, would be subject to a BART analysis and BART emission limitations.

Oregon established a contribution threshold of 0.5 dv based on the following reasons; (1) it equates to the 5% extinction threshold for new sources under the PSD New Source Review rules, (2) it is consistent with the threshold selected by other States in the West, (3) it represents the limit of perceptible change, and (4) there was no clear rationale or justification for selecting a lower level. EPA finds that these reasons alone do not provide sufficient basis for concluding that such a threshold is appropriate for Oregon. Nevertheless, based on the additional information described below, EPA proposes to approve the list of subject-to-BART sources in this SIP submittal.

In the BART Guidelines, EPA recommended that States "consider the number of BART sources affecting the Class I areas at issue and the magnitude of the individual sources' impacts. In general, a larger number of BART sources causing impacts in a Class I area may warrant a lower contribution threshold." 70 FR 39104, 39161 July 6, 2005. In developing its regional haze SIP, Oregon modeled the individual impacts of ten BART-eligible sources on Class I areas within a 300 km radius. (*See* Table 10–3.2–1 of the SIP submittal.) EPA's review of modeled impacts of the BART-eligible sources in Oregon finds there is only one group of Oregon BART-eligible sources, that collectively impact visibility at the same Class I area (Mt. Hood Wilderness Area), with a total impact greater that 1.0 dv (level defined as 'causing' visibility impairment). This group of sources consists of the Georgia Pacific Wauna pulp mill and PGE Beaver power plant in Clatskanie and Boise Paper Solutions in St. Helens. Two of these facilities, Georgia Pacific Wauna and PGE Beaver, have taken Federally Enforceable Permit Limits to limit their visibility impacts to 0.344 dv and to 0.357 dv, respectively at the Mt. Hood Wilderness Area. The remaining facility, Boise Paper Solutions, has a maximum of 0.367 dv impact at the Mt. Hood Wilderness Area. Since the combined contribution of these three sources will now be 1.068 dv, which is only slightly above the threshold of 'causing' visibility impairment, EPA is proposing to approve the 0.5 dv contribution threshold adopted by Oregon in its Regional Haze Plan.

To determine those sources subject-to-BART, Oregon used the CALPUFF dispersion model. The dispersion modeling was conducted in accord with the *BART Modeling Protocol7.* This Protocol was jointly developed by the States of Idaho, Washington, Oregon and EPA and has undergone public review. The Protocol was used by all three States in determining which BART-eligible sources are subject to BART. *See* appendix D.4 of the SIP submission for details of the modeling protocol, its application and results.

The following BART-eligible sources, based on CALPUFF modeling of 2003–2005 emissions, demonstrate impacts greater than 0.5 dv in one or more Class I areas, and were identified as subject to BART:

1. PGE Beaver Power Plant, Clatskanie
2. Georgia Pacific, Wauna Facility, Clatskanie
3. International Paper (formally Weyerhaeuser), Springfield
4. Amalgamated Sugar, Nyssa
5. PGE Boardman Power Plant, Boardman

3. Federally Enforceable Permit Limits on Oregon Sources Otherwise Subject-to-BART

The following sources elected to be regulated by a Federally enforceable permit limit to reduce visibility impacts below the 0.5 dv impact threshold and thus are not subject-to-BART:

a. PGE Beaver Power Plant

PGE Beaver Power Plant is a 558 megawatt fossil fuel-fired, electrical-generating plant located in Clatskanie, Oregon. Visibility modeling for this facility shows an impact on three Class I areas over the 0.5 dv, with the highest impact of 0.68 dv at Olympic National Park in Washington. Condition 340–224–0070 of the Title V permit (#05–2520) for this facility, modified by the Oregon Department of Environmental Quality (ODEQ) on January 21, 2009, and included in the SIP submittal, establishes emission limits and the control technology to achieve these limits, so that the impact of emissions from this facility remain below a 0.5 dv at Olympic National Park and all other Class I areas.

To achieve the emission limits established in the Title V permit, the facility must use ultra-low sulfur diesel (ULSD) fuel (with no more than 0.0015% sulfur) in its oil-fired BART eligible units. The source must use only "pipe line quality" natural gas in the gas-fueled PWEU1 unit.

Compliance with emission limits will be determined by a combination of continuous emission monitors and other

record keeping and reporting requirements. Based on the fuel use restrictions established in the permit, the predicted maximum impact for this facility, based on visibility modeling, will be 0.414 dv at Mt. Rainier National Park (the most impacted Class I area) (*See* section 10.3.2, table 10.3.2–1, and Oregon's supplemental submittal, February 1, 2011). EPA proposes to find that in light of the Federally enforceable permit limit, this source is not subject-to-BART.

b. Georgia Pacific Wauna Mill

The Georgia Pacific Wauna Mill is a pulp and paper manufacturing plant located in Clatskanie, Oregon. Modeling conducted for this facility shows an impact at Olympic National Park of 0.57 dv. This facility elected to be regulated by an FEPL to limit its emission so that visibility impacts in any Class I area remain below 0.5 dv. The section titled "Emission Unit Specific Limits—Regional Haze Requirements" of Title V permit (#208850) for this facility, modified by ODEQ on December 2, 2010, and included in the SIP submittal, identifies emission limits and the methods for achieving these limits, so that emissions from this facility will not cause impairment above 0.5 dv.

To achieve the emission limits established by the permit, the mill has reduced its SO_2 emissions by (1) permanently reducing use of fuel oil in the Power Boiler, (2) discontinuing the use of fuel oil in the Lime Kiln until the Non-Condensable Gas Incinerator (NCGI) unit is shut down, and (3) limiting pulp production rate to 1,030 tons per day until the NCGI unit is shut down, at which time production rate will be limited to 1,350 tons per day. Compliance with emission limits will be determined by visible emission monitoring and source testing.

The maximum predicted impact for this facility will be 0.45 dv at Olympic National Park (*See* section 10.3.2, table 10.3.2–1, and Oregon's supplemental submittal, February 1, 2011). EPA proposes to find that in light of the FEPL, this source is not subject-to-BART.

c. International Paper

International Paper is a containerboard plant located in Springfield, Oregon. Modeling conducted for this facility shows an impact in nine Class I areas over the 0.5 dv. The highest impact of 1.45 dv occurs at the Three Sisters Wilderness Area. Condition 210 of Title V permit (#208850) for this facility, modified by Lane Regional Air Protection Agency on April 7, 2009, and included in the SIP submittal, identifies emission limits and the methods for achieving these limits, so that the impact of emissions from this facility remain below a 0.5 dv impact.

To achieve the emission limits established by the permit, the plant has reduced its emissions of SO_2, NO_X, and PM by accepting limits on fuel usage and operation, and meeting a combined SO_2 and NO_X daily emission limit based on a plant fuel use specific formula. The permit requires this facility to include the package boiler (EU–150B) emissions when demonstrating compliance with condition 210 of the permit until the source submits a notice of completion of No. 4 recovery boiler mud and steam drum replacement. Compliance with emission limits will be determined by testing the sulfur concentrations in the natural gas and fuel oil used by this facility at specified frequencies, and using the appropriate emission factors for these fuels to calculate estimate daily SO_2 and NO_X emissions. With the Federally enforceable permit limit, the maximum predicted impact for this facility will be 0.44 dv at Three Sisters Wilderness Area (*See* section 10.3.2, table 10.3.2–1, and Oregon's supplemental submittal, February 1, 2011).

EPA proposes to find that in light of the Federally enforceable permit limit this source is not subject-to-BART.

d. Amalgamated Sugar Plant

Amalgamated Sugar Plant is a sugar beet processing plant located in Nyssa, in eastern Oregon, near the Idaho border. This plant is currently shutdown and has no identified date to resume operations. However, since its air quality permit is still valid, BART modeling was conducted for the plant and an impact of 0.514 dv was identified at the Eagle Cap Wilderness Area. In the event this source resumes operation in the future, Oregon Department of Environmental Quality (ODEQ) will require that this facility be subject to a Federally enforceable permit limit in its Title V permit, or conduct a BART analysis and install BART prior to resuming operation. The Federally enforceable permit limit will consist of an emission limit on the Foster-Wheeler boiler at this facility, which will ensure visibility impact remains under the 0.5 dv threshold. *See* OAR 340–223–0040. EPA proposes to find that in light of these provisions, this source is not currently subject- to-BART.

4. BART for PGE Boardman

The PGE power plant near Boardman, Oregon, (PGE Boardman) is a 584 MW coal-fired electric utility and is BART-eligible because it is was constructed between 1962 and 1977, is a fossil-fuel fired steam electric generating plant of more than 250 million British thermal units (mm/Btu) per hour heat input, and has potential emissions greater than 250 tons per year of sulfur dioxide (SO_2), nitrogen oxides (NO_X), and particulate matter (PM). PGE Boardman commenced construction in 1975 and began operation in 1980. The PGE Boardman boiler is a Foster Wheeler dry bottom, opposing-wall fired design, controlled with first generation low NO_X burners and overfire air. An electrostatic participator currently controls PM emissions.

In July 2009, ODEQ conducted a BART analysis and determined that BART for PGE Boardman, was a combination of new low-NO_X burners/modified overfire air (NLNB/MOFA) for NO_X and Semi-Dry Flue Gas Desulfurization (SDFGD) for SO_2, with a pulse jet fabric filter for PM. ODEQ also determined that Selective Catalytic Reduction (SCR) would increase control efficiency for NO_X emissions and was reasonable to assure further reasonable progress. Based on the assumption that the facility would operate for at least 30 years (until 2040), this BART analysis determined these controls would be cost effective. Oregon included this BART determination in the Regional Haze Plan it submitted to EPA in July 2009. *See* Oregon Regional Haze Plan dated July 16, 2009, and OAR 340–223–0010 through OAR 340–223–0050, dated June 30, 2009. On September 11, 2009, EPA informed ODEQ that this SIP submission was complete,

In a letter from PGE to ODEQ dated October 22, 2010, PGE requested that ODEQ reopen the Regional Haze BART rulemaking to consider an alternative BART approach for PGE Boardman. This alternative approach would allow PGE Boardman to commit to cease burning coal by December 31, 2020, and in the interim operate with less expensive control technology. This alternative shortens the expected useful life of the coal-burning Foster Wheeler boiler by 20 years compared to the life expectancy relied on in the original BART determination. This alternative would also allow the boiler to be restarted using an alternative fuel at a future date. (A re-start of the boiler with an alternate fuel source would then require PGE to comply with all relevant requirements, including as applicable the requirement to apply for a Prevention of Significant Deterioration (PSD) construction permit which will require an analysis and permitted emission limits that represent Best Available Control Technology (BACT) before construction could commence.)

Based on PGE's request, ODEQ performed an additional BART analysis for PGE Boardman assuming a shorter life expectancy. ODEQ evaluated visibility improvements in Class I areas of all technically feasible emission control technologies and determined the cost effectiveness of each technology assuming operation until 2020. *See* BART Guidelines Section IV. D. 4.(k) (explaining how to take into account the project's remaining useful life when calculating control costs).

ODEQ's BART analysis for all technically feasible control technologies for the Foster-Wheeler boiler is described in Appendices D–6 and D–7 of the revised Oregon Regional Haze SIP submitted December 2010. ODEQ determined that the technically feasible controls for NO_X were the following: new low-NO_X burners with modified overfire air (NLNB/MOFA); selective non-catalytic reduction (SNCR) with NLNB/MOFA; and selective catalytic reduction (SCR). ODEQ determined that the technically feasible controls for SO_2 for were the following: reduced-sulfur coal restriction (RSCR); Direct Sorbent Injection (DSI); semi-dry flue gas desulfurization (SDFGD); and wet flue gas desulfurization (WFGD). The technically feasible controls evaluated for PM emission control were the following: pulsed jet fabric filter (PJFF) and electrostatic precipitation (ESP). An ESP is already installed and operating at PGE Boardman.

After identifying all technically feasible technologies to control the various pollutants ODEQ determined the emission limits achievable by each technology. The following results (for NO_X, SO_2 and PM) are shown in the Control Effectiveness table in Appendix D–7 of the SIP submittal. The emission limits for NO_X would be:

- NLNB/MOFA—0.23 lb/mmBtu
- SNCR—0.19 lb/mmBtu
- SCR—0.07 lb/mmBtu

The emission limits for SO_2 would be:

- RSCR—0.6 lb/mmBtu
- DSI—0.4 lb/mmBtu
- SDFGD—0.12 lb/mmBtu
- WFGD—0.09 lb/mmBtu

The emission limits for PM would be:

- PJFF—0.012 lb/mmBtu
- ESP—0.017 lb/mmBtu

ODEQ next evaluated the cost effectiveness, the energy impacts, and non-air quality environmental impacts of each technically feasible control. The cost effectiveness of NO_X control alternatives were:

- NLNB/MOFA—$1,263/ton
- NLNB/MOFA/SNCR—$1,816/ton
- NLNB/MOFA/SCR—$8,337/ton

The cost effectiveness of SO_2 control alternatives were:

- DSI–1 (referred to as the initial phase of DSI operation)—$2,458/ton
- SDFGD—$5,535/ton (including the cost of installing a PJFF)
- WFGD—$7,631/ton

Included in the cost effectiveness values presented above are the direct energy and non-air costs. The direct energy impacts for each control technology were based on the auxiliary power consumption of the control technology and the additional draft system power consumption necessary to overcome the control technology resistance in the flue gas flow path. Indirect energy impacts, such as the energy to produce raw materials used for the control technology were not included in the cost estimates.

ODEQ identified and considered the following potential non-air quality concerns for each technology: NLNB/MOFA—increased carbon monoxide air emissions and boiler tube slagging; SNCR—ammonia option has potential safety issues, urea option produces CO_2, ammonia slip, and ammonia bisulfate formation (air preheater fouling); SCR—ammonia handling safety, SO_2 to SO_3 conversion and air preheater corrosion, ammonium bisulfate formation (air preheater fouling), soot blowing to manage ash deposition in the catalyst, reliability of catalyst in high temperature application, and ammonia slip; DSI—potential interference with mercury control system, creation of hazardous waste, requirement for increased maintenance of the ducts and ESP, and increase in particulate emissions; SDFGD—fugitive emissions from raw material and byproduct handling; WFGD—fugitive emissions from raw material and byproduct handling, persistent water plume from stack, material corrosion, dewatering, and addition of PJFF for mercury control. ODEQ concluded that in spite of the potential concerns identified, each of these control technologies are proven in use at other coal-fired boilers and that these concerns could be adequately addressed with a well-designed system. The only exception is SNCR in combination with DSI, which may result in additional PM emissions due to ammonia slip. ODEQ then determined the visibility improvements that could be achieved over current conditions with each combination of technically feasible emission control technologies in the Mt. Hood Wilderness Area, the Class I area most impacted by PGE Boardman. (*See* the Control Effectiveness table in Appendix D–7 of the SIP submittal.) The visibility improvements were:

- NLNB/MOFA—1.44 dv
- NLNB/MOFA/SNCR—1.62 dv
- NLNB/MOFA/SCR—2.17 dv
- RSCR—0.43 dv
- DSI–1—0.84 dv
- SDFGD—1.24 dv
- WFGD—1.19 dv
- PJFF—<0.1 dv

As explained in the 2010 revised BART analysis, and after full public notice and comment, ODEQ determined BART emission limits appropriate for the PGE Boardman facility based on it ceasing to burn coal by December 31, 2020. The specific emission limits and associated control technologies are explained below.

Specifically ODEQ determined that BART for NO_X is 0.23 lbs/mmBtu based on NLNB/MOFA. ODEQ found that the technology is cost effective and provides significant visibility improvement (≤1.0 dv in Mt. Hood wilderness area), as well as significant improvement in 11 other Class I areas. Although the technology option of NLNB/MOFA plus selective non-catalytic reduction (SNCR) was cost effective ($1,816/ton), ODEQ rejected this technology option because adding SNCR only provided an additional 0.18 dv of visibility improvement over NLNB/MOFA at the Mt. Hood Wilderness Area, and because of concerns about excess ammonia emissions (commonly referred to as ammonia slip) which may result in increased rates of secondary particulate matter in the form of ammonium sulfate. As shown in the Control Effectiveness table in Appendix D–7, the NO_X emission reduction attributed to SNCR was only 17% better than that achieved with NLNB/MOFA alone.

ODEQ determined BART for SO_2 is 0.40 lbs/mmBtu based on initial operational efficiency of DSI (DSI–1). This determination was made because DSI–1 is cost effective at $3,370/ton, will provide significant visibility improvement (> 0.5dv) in the Mt. Hood Wilderness Area, and provide significant improvement in 11 other Class I areas. The cost effectiveness value that ODEQ calculated for SDFGD was $5,535/ton. The incremental cost effectiveness of SDFGD compared to DSI–1 is about $7,200/ton. ODEQ stated that SDFGD is not considered to be BART because it is not cost effective when considering a useful life expectancy of 2020.

ODEQ determined BART for PM is 0.40 lb/mmBtu, which is the current PM emission limit for PGE Boardman with the existing ESP system. ODEQ's analysis concluded that the alternative PM control technology, PJFF, would only reduce PM emissions by 122 ton/year compared to 2007 actual PM emissions, and would not be cost effective at $186,102/ton (*see*

Addendum to DEQ BART Report for the Boardman Power Plant, dated November 11, 2010).

ODEQ also determined that further operational refinements to the DSI system or the use of improved sorbent (called DSI–2) could be achieved by 2018, resulting in further reductions in SO_2 emissions at that time. Therefore, ODEQ identified a goal of 0.30 lbs/mmBtu for SO_2 emissions to achieve further reasonable progress by July 1, 2018. This goal would be achieved with operational refinements to the DSI system or the use of an improved sorbent that may be available in the future.

EPA reviewed the BART determination for PGE Boardman and found that ODEQ appropriately followed the required steps for determining BART as described in the BART Guidelines Section IV. D. These steps are: (1) Identify all available retrofit control technologies; (2) eliminate technically infeasible options; (3) evaluate control effectiveness of remaining control technologies; (4) evaluate impacts and document results; and (5) evaluate visibility impacts. EPA proposes to find that the methods used by ODEQ for determining cost, cost effectiveness, energy and non air quality impacts, and visibility improvement of BART controls for the Foster Wheeler boiler at the PGE Boardman facility for a 2020 plant lifetime are consistent with the RHR and EPA guidance. ODEQ has also used an acceptable methodology for determining the impacts of remaining useful facility life on the cost and cost effectiveness of BART controls for the 2020 plant lifetime. The emission limits, and schedules for meeting them, are identified in the Oregon Regional Haze Rules, OAR 340–223–0030. (State effective December 9, 2010). Therefore, EPA proposes to approve Oregon's BART determination for PGE Boardman.

IV. EPA's Analysis of Oregon's Regional Haze Rules

Oregon included in its Regional Haze SIP submittal revisions to the Oregon Regional Haze Rules (OAR 340–223–0010 through 340–223–0080), adopted by the State on December 9, 2010. These rules, among other things, establish emission limits on certain sources that significantly contribute to visibility impairment in Oregon Class I areas. Additionally, these rules establish the BART emission limits analyzed and described in section II.D.4. above for the PGE Boardman facility. As explained in more detail below, the rules related to PGE Boardman establish a scenario whereby PGE would cease burning coal in the Boardman Foster Wheeler boiler no later than 2020 and perhaps as early as 2014. Additionally, pursuant to OAR 340–223–0050, upon EPA's approval of the rules, the provisions containing alternative BART emission limits based on the facility continuing to burn coal until at least 2040 would be repealed as a matter of law. *See* Oregon Regional Haze SIP Submittal Attachment 1.1 pgs 5–6. *http://www.deq.state.or.us/aq/pge.htm* (ODEQ Web page describing the new regulations for PGE Boardman).

OAR 340–223–0010

This rule explains that the purpose of OAR 340–223–0020 through 340 223–0080 is to establish requirements for certain sources emitting air pollutants that reduce visibility and contribute to regional haze in Class I areas for the purpose of implementing Best Available Retrofit Technology requirements and other requirements associated with the Federal Regional Haze Rules in 40 CFR 51.308.

OAR 340–223–0020

This rule includes the following definitions, "BART-eligible source", "Beat Available Retrofit Technology (BART)", "Deciview", and "Subject to BART". These definitions are consistent with their definitions in the Federal RHR. Two additional definitions, "Dry sorbent injection pollution control system" and "Ultra-low sulfur coal" are consistent with industry practices.

OAR 340–223–0030

This rule identifies BART emission limits, and other requirements pursuant to the Federal regional haze rule, and the schedule for meeting these limits for the Foster Wheeler boiler at the PGE Boardman facility. This rule also includes the requirement that the Foster Wheeler boiler facility permanently cease burning coal by no later than December 31, 2020. OAR 340–223–0030(1)(e). In this rule, the specific emission limits and schedule for these limits are:

1. NO_X—Between July 1, 2011 and December 31, 2020, NO_X emissions must not exceed 0.23 lbs/mmBtu (pounds per million British thermal units) on a 30-day rolling average. However, if PGE demonstrates to ODEQ by December 31, 2011, that the 0.23 lbs/mmBtu cannot be achieved with combustion controls, ODEQ may, by order, grant an extension to July 1, 2013.

2. SO_2—Between July 1, 2014 and June 30, 2018, SO_2 emissions must not exceed 0.4 lbs/mmBtu and between July 1, 2018 and December 31, 2020, SO_2 emissions must not exceed 0.30 lb/mmBtu. However, if PGE cannot achieve 0.4 lbs/mmBtu by July 1, 2014, based on the reduction of SO_2 emissions to the maximum extent feasible through the use of dry sorbent injection, the limits would be the lowest achievable with DSI, but no higher than 0.55 lbs/mmBtu by July 1, 2014. The SO_2 emission limit is lowered to 0.30 lb/mmBtu by July 1, 2018. This limit is more stringent than the 0.40 lb/mmBtu BART limit and was adopted to achieve further reasonable progress in Class I areas. ODEQ believes that this limit could be met by further refinements to the DSI system (called "DSI–2"), or DSI refinements in combination with ultra-low sulfur coal.

3. PM—Between July 1, 2014 and December 31, 2020, PM emissions must not exceed 0.040lb/mmBtu heat input.

OAR 340–223–0030 also explains that notwithstanding the definition of netting basis in OAR 340–200–0020, and the process for reducing plant site emission limits in OAR 340–222–0043, the netting basis and the plant site emission limitations (PSELs) for the Foster Wheeler boiler are reduced to zero upon the date on which the boiler permanently ceases burning coal. Prior to that date the netting basis and PSELs for the boiler apply only to physical changes or changes in the method of operation of the source for the purposes of complying with the emission limits applicable to the boiler.

OAR 340–223–0040

This rule explains that a BART-eligible source, which would be subject-to-BART based on visibility modeling, may accept a Federally enforceable permit limit to reduce the source's emissions and prevent the source from being subject-to-BART. It also explains that any source that accepts a Federal enforceable permit limit and subsequently proposes to terminate this limit, such that an increase in emissions would make the source subject-to-BART, must submit a BART analysis to ODEQ and install BART as determined by ODEQ prior to terminating the Federally enforceable permit limits. This rule also explains that the Foster Wheeler boiler at the Amalgamated Sugar Company in Nyssa, Oregon, is currently not operating, and that prior to resuming operation the owner or operator must either (1) submit a BART analysis and install BART as determined by ODEQ, or (2) obtain and comply with a Federally enforceable permit limit to ensure that the source's emissions will not cause the source to be subject-to-BART.

OAR 340–223–0050

OAR 340–223–0050(1) provides that the owner and operator of the Foster Wheeler boiler at the PGE Boardman

facility may elect to comply with OAR 340–223–0060 and OAR 340–223–0070, or with OAR 340–223–0080, in lieu of OAR 340–223–0030. OAR 340–223–0060 and 0070 provide emission limits based on coal operation until 2040, and OAR 340–223–0080 provides emission limits based on PGE Boardman permanently ceasing to burn coal within five years of EPA's approval of OAR chapter 340, division 223. Any of these alternatives are available only if the owner or operator provides written notification to the ODEQ Director by July 1, 2014 of which alternative it has chosen to comply with. Additionally, as provided in OAR 340–223–0050(4), if EPA approves a SIP revision incorporating OAR 340–223–0030 (discussed above concerning BART requirements based on PGE permanently ceasing to burn coal in the Foster Wheeler boiler by December 31, 2020) compliance with OAR 340–223–0060 and 0070 is no longer an alternative. Accordingly, EPA's approval of OAR 340–223–0030, as proposed in this action, would eliminate the alternative BART requirements allowed under OAR 340–223–0060 and 340–223–0070.

OAR 340–223–0060 and OAR 340–223–0070

OAR 340–223–0060 identifies the SO_2, NO_X, and PM BART emission limits and the schedules for meeting these limits based upon coal operation of the Foster Wheeler boiler at the PGE Boardman facility until 2040. OAR 340–223–0070 identifies additional NO_X emission limits that must be met by July 1, 2017 to achieve further reasonable progress for the PGE Boardman facility based on operation of the Foster Wheeler boiler until 2040. In this action, EPA is proposing to approve a SIP revision incorporating OAR 340–223–0030. Thus, if or when this proposal is finalized, as provided in OAR 340–223–0050 and explained above, OAR 340–223–0060 and –0070 would be repealed as a matter of law and compliance with them would no longer be an alternative.

OAR 340–0080

This rule, which is an alternative to OAR 340–223–0030, sets NO_X emission limits and schedules for meeting these limits for the Foster Wheeler boiler at the PGE Boardman facility. As explained above, pursuant to OAR 340–223–0050(2), this alternative is based on the boiler permanently ceasing to burn coal no later than five years after EPA's approval of the Oregon Regional Haze Plan that incorporates OAR chapter 340, division 223. As in described above for OAR–340–223–0030, this provision also describes the process for establishing the netting basis if this alternative is chosen.

In summary, EPA is proposing to find that Oregon's use of Federal enforceable permit limits to reduce emissions of four sources below the 0.5 dv visibility impact contribution threshold, is an acceptable means of exempting a source from being subject-to-BART. Additionally, based on the analysis described in section III.E. 4. above, EPA proposes to find that the rules relating to PGE Boardman are approvable. EPA proposes to approve OAR 340–223–0010 through 340–223–0080.

V. EPA's Analysis of Whether the Oregon Regional Haze SIP Submittal Meets Interstate Transport Requirements

Section 110(a)(2)(D)(i)(II) of the Act requires SIP revisions to "contain "adequate provisions * * * prohibiting * * * any source or other types of emission activity within the State from emitting any air pollutant in amounts which will * * * interfere with measures required to be included in the applicable implementation plan for any other State * * * to protect visibility." EPA is proposing to find that the Oregon SIP submittal of December 2010, and the supplemental SIP submittal dated February 1, 2011, to address regional haze contain adequate provisions to meet these "good neighbor" provisions of section 110(a)(2)(D)(i)(II) with respect to visibility.

As an initial matter, EPA notes that section 110(a)(2)(D)(i)(II) does not explicitly specify how EPA should ascertain whether a State's SIP contains adequate provisions to prevent emissions from sources in that State from interfering with measures required in another State to protect visibility. Thus, the statute is ambiguous on its face, and EPA must interpret that provision.

Our 2006 Guidance recommended that a State could meet the visibility prong of the transport requirements for section 110(a)(2)(D)(i)(II) by submission of the regional haze SIP, due in December 2007. EPA's reasoning was that the development of the regional haze SIPs was intended to occur in a collaborative environment among the States, and that through this process States would coordinate on emissions controls to protect visibility on an interstate basis. In fact, in developing their respective reasonable progress goals, WRAP States consulted with each other through the WRAP's work groups. As a result of this process, the common understanding was that each State would take action to achieve the emissions reductions relied upon by other States in their reasonable progress demonstrations under the RHR. This interpretation is consistent with the requirement in the regional haze rule that a State participating in a regional planning process must include "all measures needed to achieve its apportionment of emission reduction obligations agreed upon through that process." 40 CFR 51.308(d)(3)(ii).

We believe that with approval of the portions of the Oregon SIP that we are proposing to take action on today, Oregon's SIP will also contain adequate provisions to prevent interstate transport that would interfere with the measures required in other States to protect visibility. Chapter 13 of the Oregon SIP submittal explains the consultation process followed by Oregon and its neighboring States to meet the requirements in the regional haze rule to address the interstate transport of visibility impairing pollutants, and the outcome of that process. Section 13.2.3 indicates that Oregon and neighboring States agreed that "no major contributions were identified that supported developing new interstate strategies, mitigation measures, or emissions reductions obligations," and that each State could achieve its share of emission reductions through the implementation of BART and other existing measures in State regional haze plans. Additionally, when ODEQ subsequently revised its BART determination for PGE Boardman in 2010, it specifically consulted with Idaho and Washington, the two States with Class I areas identified as impacted by the PGE Boardman plant. These States confirmed that they support the revisions and indicated that they did not anticipate the difference in emissions between the 2009 BART determination for Boardman and the 2010 BART determination to have any material adverse effect on the State's reasonable progress goals for 2018. *See* Oregon Supplemental SIP Submittal. Oregon also agreed that future consultation would address any new strategies or measures needed. The measures addressing BART in the Oregon SIP submittal accordingly would appear to be adequate to prevent emissions from sources in Oregon from interfering with the measures required to be in the regional haze SIPs of its neighbors.

This conclusion is consistent with the analysis conducted by the WRAP, an analysis that provides an appropriate means for further evaluating whether emissions from sources in a State are interfering with the visibility programs of other States, as contemplated in

section 110(a)(2)(D)(i)(II). As described below, EPA's evaluation shows that the BART measures of the Regional Haze SIP submittal, that we are proposing to approve today, are generally consistent with the emissions reductions assumptions of the WRAP modeling from Oregon sources. Accordingly, EPA is proposing to approve Oregon's SIP as ensuring that emissions from Oregon do not interfere with the reasonable progress goals of other States.

In developing their visibility projections using photochemical grid modeling, the WRAP States assumed a certain level of emissions from sources within Oregon. The visibility projection modeling was in turn used by the States to establish their own reasonable progress goals. We have reviewed the WRAP photochemical modeling emissions projections used in the demonstration of reasonable progress towards natural visibility conditions and compared them to the emissions limits that will result from the imposition of BART on sources in Oregon. We have concluded that with the emissions reductions achieved by these measures, the emissions from Oregon sources in the projected inventory for 2018 (which included both reductions and increases) will be approximately equal to that assumed in the WRAP analysis.

As a result of the foregoing determination, EPA is proposing to find that the Oregon Regional Haze SIP submission contains the emission reductions needed to achieve Oregon's share of emission reductions agreed upon through the regional planning process. As reflected in its Regional Haze SIP submittal, Oregon committed to achieve these emission reductions to address impacts on visibility on Class I areas in surrounding States. The portions of the Oregon Regional Haze SIP that we are proposing to approve ensure that emissions from Oregon will not interfere with the reasonable progress goals for neighboring States' Class I areas. EPA is accordingly proposing to find that these emission reductions also meet the requirements of section 110(a)(2)(D)(i)(II) of the Act with respect to the visibility prong for the 1997 8-hour ozone and 1997 $PM_{2.5}$ NAAQS.

VI. What action is EPA proposing?

EPA is proposing to approve portions of the Oregon Regional Haze plan, submitted on December 20, 2010, and as supplemented on February 1, 2011, as meeting the requirements set forth in section 169A of the Act and in 40 CFR 51.308(e) regarding BART. EPA is also proposing to approve the Oregon submittal as meeting the requirements of 51.308(d)(2) and (4)(v) regarding the calculation of baseline and natural conditions for all 12 Class I areas in Oregon, and the statewide inventory of emissions of pollutants that are reasonably anticipated to cause or contribute to visibility impairment in any mandatory Class I Federal Area. In addition, EPA is proposing to find that the BART measures in the Oregon Regional Haze plan meet the requirements of section 110(a)(D)(ii)(II) of the CAA with respect to the 1997 8-hour ozone and 1997 $PM_{2.5}$ NAAQS. Finally, EPA is proposing to approve OAR 340–223–0010 through 340–223–0080 [Regional Haze Rules].

VII. Oregon Notice Provision

Oregon Revised Statute 468.126, prohibits ODEQ from imposing a penalty for violation of an air, water, or solid waste permit unless the source has been provided five days' advanced written notice of the violation and has not come into compliance or submitted a compliance schedule within that five-day period. By its terms, the statute does not apply to Oregon's Title V program or to any program if application of the notice provision would disqualify the program from Federal delegation. Oregon has previously confirmed that, because application of the notice provision would preclude EPA approval of the Oregon SIP, no advance notice is required for violation of SIP requirements.

EPA is taking no action on chapter 340, division 200, section 0040, State of Oregon Clean Air Act Implementation Plan, because this section simply describes the State's procedures for adopting its SIP and incorporates by reference all of the revisions adopted by the Environmental Quality Council for approval into the Oregon SIP (as a matter of State law).

VIII. Statutory and Executive Order Reviews

Under the Clean Air Act, the Administrator is required to approve a SIP submission that complies with the provisions of the Act and applicable Federal regulations. 42 U.S.C. 7410(k); 40 CFR 52.02(a). Thus, in reviewing SIP submissions, EPA's role is to approve State choices, provided that they meet the criteria of the Clean Air Act. Accordingly, this proposed action merely approves State law as meeting Federal requirements and does not impose additional requirements beyond those imposed by State law. For that reason, this proposed action:

- Is not a "significant regulatory action" subject to review by the Office of Management and Budget under Executive Order 12866 (58 FR 51735, October 4, 1993);
- Does not impose an information collection burden under the provisions of the Paperwork Reduction Act (44 U.S.C. 3501 *et seq.*);
- Is certified as not having a significant economic impact on a substantial number of small entities under the Regulatory Flexibility Act (5 U.S.C. 601 *et seq.*);
- Does not contain any unfunded mandate or significantly or uniquely affect small governments, as described in the Unfunded Mandates Reform Act of 1995 (Pub. L. 104–4);
- Does not have Federalism implications as specified in Executive Order 13132 (64 FR 43255, August 10, 1999);
- Is not an economically significant regulatory action based on health or safety risks subject to Executive Order 13045 (62 FR 19885, April 23, 1997);
- Is not a significant regulatory action subject to Executive Order 13211 (66 FR 28355, May 22, 2001);
- Is not subject to requirements of Section 12(d) of the National Technology Transfer and Advancement Act of 1995 (15 U.S.C. 272 note) because application of those requirements would be inconsistent with the Clean Air Act; and
- Does not provide EPA with the discretionary authority to address, as appropriate, disproportionate human health or environmental effects, using practicable and legally permissible methods, under Executive Order 12898 (59 FR 7629, February 16, 1994).

In addition, this rule does not have Tribal implications as specified by Executive Order 13175 (65 FR 67249, November 9, 2000), because the SIP is not approved to apply in Indian country located in the State, and EPA notes that it will not impose substantial direct costs on Tribal governments or preempt Tribal law.

List of Subjects in 40 CFR Part 52

Environmental protection, Air pollution control, Intergovernmental relations, Nitrogen dioxide, Particulate matter, Reporting and recordkeeping requirements, Sulfur oxides, Visibility, and Volatile organic compounds.

Dated: February 28, 2011.

Dennis McLerran,

Regional Administrator, Region 10.

[FR Doc. 2011–5198 Filed 3–7–11; 8:45 am]

BILLING CODE 6560–50–P

DEPARTMENT OF HOMELAND SECURITY

Federal Emergency Management Agency

44 CFR Part 67

[Docket ID FEMA–2008–0020; Internal Agency Docket No. FEMA–B–1069]

Proposed Flood Elevation Determinations

AGENCY: Federal Emergency Management Agency, DHS.

ACTION: Proposed rule; correction.

SUMMARY: On September 15, 2009, FEMA published in the **Federal Register** a proposed rule that contained an erroneous table. This notice provides corrections to that table, to be used in lieu of the information published at 74 FR 47169. The table provided here represents the flooding sources, location of referenced elevations, effective and modified elevations, and communities affected for Lawrence County, South Dakota, and Incorporated Areas. Specifically, it addresses the following flooding sources: Hungry Hollow Gulch, Ice House Creek, Ice House Creek Tributary A, Riggs Gulch, Spearfish Creek, and Unnamed Tributary to Higgins Gulch.

DATES: Comments are to be submitted on or before June 6, 2011.

ADDRESSES: You may submit comments, identified by Docket No. FEMA–B–1069, to Luis Rodriguez, Chief, Engineering Management Branch, Federal Insurance and Mitigation Administration, Federal Emergency Management Agency, 500 C Street, SW., Washington, DC 20472, (202) 646–4064 or (e-mail) *luis.rodriguez1@dhs.gov.*

FOR FURTHER INFORMATION CONTACT: Luis Rodriguez, Chief, Engineering Management Branch, Federal Insurance and Mitigation Administration, Federal Emergency Management Agency, 500 C Street SW., Washington, DC 20472, (202) 646–4064 or (e-mail) *rodriguez1@dhs.gov.*

SUPPLEMENTARY INFORMATION: The Federal Emergency Management Agency (FEMA) publishes proposed determinations of Base (1% annual-chance) Flood Elevations (BFEs) and modified BFEs for communities participating in the National Flood Insurance Program (NFIP), in accordance with section 110 of the Flood Disaster Protection Act of 1973, 42 U.S.C. 4104, and 44 CFR 67.4(a).

These proposed BFEs and modified BFEs, together with the floodplain management criteria required by 44 CFR 60.3, are minimum requirements. They should not be construed to mean that the community must change any existing ordinances that are more stringent in their floodplain management requirements. The community may at any time enact stricter requirements of its own or pursuant to policies established by other Federal, State, or regional entities. These proposed elevations are used to meet the floodplain management requirements of the NFIP and also are used to calculate the appropriate flood insurance premium rates for new buildings built after these elevations are made final, and for the contents in those buildings.

Corrections

In the proposed rule published at 74 FR 47169, in the September 15, 2009, issue of the **Federal Register**, FEMA published a table under the authority of 44 CFR 67.4. The table, entitled "Lawrence County, South Dakota, and Incorporated Areas" addressed the following flooding sources: Hungry Hollow Gulch, Ice House Creek, Ice House Creek Tributary A, Riggs Gulch, Spearfish Creek, and Unnamed Tributary to Higgins Gulch. That table contained inaccurate information as to the location of referenced elevation, effective and modified elevation in feet, or communities affected for these flooding sources. It also incorrectly listed the City of Deadwood as an affected community for Ice House Creek Tributary A; the affected community should have been listed as the City of Spearfish. In this notice, FEMA is publishing a table containing the accurate information, to address these prior errors. The information provided below should be used in lieu of that previously published.

Flooding source(s)	Location of referenced elevation **	* Elevation in feet (NGVD) + Elevation in feet (NAVD) # Depth in feet above ground ∧ Elevation in meters (MSL)		Communities affected
		Effective	Modified	
Lawrence County, South Dakota, and Incorporated Areas				
Hungry Hollow Gulch	Approximately 350 feet downstream of Ames Avenue	+3,634	+3,632	City of Spearfish.
	Approximately 645 feet upstream of St. Joe Street	+3,697	+3,699	
Ice House Creek	Approximately 25 feet upstream of Grant Street	None	+3,658	City of Spearfish.
	Approximately 50 feet upstream of State Street	None	+3,686	
Ice House Creek Tributary A	Approximately 73 feet downstream of 8th Street	None	+3,663	City of Spearfish.
	Approximately 150 feet downstream of State Street	None	+3,671	
Riggs Gulch	Approximately 200 feet downstream of U.S. Route 14A.	None	+3,764	City of Spearfish.
	Approximately 920 feet upstream of Colorado Boulevard.	None	+3,843	
Spearfish Creek	Just downstream of Utah Boulevard	+3,569	+3,570	City of Spearfish, Unincorporated Areas of Lawrence County.
	Approximately 1,300 feet upstream of Winterville Drive.	+3,725	+3,726	
Unnamed Tributary to Higgins Gulch.	Approximately 4,430 feet downstream of the I–90 West ramp.	None	+3,440	City of Spearfish.
	Approximately 1,500 feet downstream of the I–90 West ramp.	None	+3,491	

* National Geodetic Vertical Datum.

Flooding source(s)	Location of referenced elevation **	* Elevation in feet (NGVD) + Elevation in feet (NAVD) # Depth in feet above ground ∧ Elevation in meters (MSL)		Communities affected
		Effective	Modified	

+ North American Vertical Datum.
# Depth in feet above ground.
∧ Mean Sea Level, rounded to the nearest 0.1 meter.
** BFEs to be changed include the listed downstream and upstream BFEs, and include BFEs located on the stream reach between the referenced locations above. Please refer to the revised Flood Insurance Rate Map located at the community map repository (see below) for exact locations of all BFEs to be changed.

Send comments to Luis Rodriguez, Chief, Engineering Management Branch, Federal Insurance and Mitigation Administration, Federal Emergency Management Agency, 500 C Street, SW., Washington, DC 20472.

ADDRESSES

City of Spearfish

Maps are available for inspection at the 625 5th Street, Spearfish, SD 57783.

Unincorporated Areas of Lawrence County

Maps are available for inspection at 90 Sherman Street, Deadwood, SD 57732.

(Catalog of Federal Domestic Assistance No. 97.022, "Flood Insurance.")

Dated: February 7, 2011.

Sandra K. Knight,

Deputy Federal Insurance and Mitigation Administrator, Mitigation, Department of Homeland Security, Federal Emergency Management Agency.

[FR Doc. 2011–5223 Filed 3–7–11; 8:45 am]

BILLING CODE 9110–12–P

DEPARTMENT OF DEFENSE

Defense Acquisition Regulations System

48 CFR Parts 211, 212, and 252

[DFARS Case 2009–D043]

RIN 0750–AG83

Defense Federal Acquisition Regulation Supplement; Reporting of Government-Furnished Property

AGENCY: Defense Acquisition Regulations System; Department of Defense (DoD).

ACTION: Notice of public meeting on proposed rule—correction.

SUMMARY: DoD is proposing to amend the Defense Federal Acquisition Regulation Supplement (DFARS) to revise and expand reporting requirements for Government-furnished property to include items uniquely and non-uniquely identified, and to clarify policy for contractor access to Government supply sources.

DATES: *Public Meeting:* DoD is hosting a public meeting to discuss the proposed rule on March 18, 2011, from 1 p.m. to 4 p.m. DST. DoD published a notice of the public meeting on March 1, 2011 (76 FR 11190). This notice contains the correct Web address to register for the meeting and provides additional information about the process for admittance to the meeting.

Attendees should register for the public meeting at least one week in advance to ensure adequate room accommodations and to facilitate admittance into the meeting. Registrants will be given priority if room constraints require limits on attendance. To register, go to—*http://www.acq.osd.mil/dpap/dars/government_furnished_property.html* and submit the following information:

(1) Company or organization name;

(2) Full names of persons attending;

(3) Identity if desiring to speak; limit to a 10-minute presentation per company or organization;

(4) Last four digits of social security number for each person attending (non-Federal employees only).

Send questions about registration or the submission of comments to the e-mail address identified at—*http://www.acq.osd.mil/dpap/dars/government_furnished_property.html.* Please cite "Public Meeting, DFARS Case 2009–D043" in the subject line of the e-mail.

ADDRESSES:

Public Meeting: The public meeting will be held in the General Services Administration (GSA) multipurpose room, 2nd floor, One Constitution Square (OCS), 1275 First Street, NE., Washington, DC 20417. Interested parties are encouraged to arrive at least 30 minutes early.

Federal employees: Upon arrival at OCS, attendees may enter through the main entrance and show their badge to the security officer behind the front desk prior to gaining admittance.

Non-Federal employees: Upon arrival at OCS, attendees must have a valid picture ID and enter through the visitor entrance. From there, they will be escorted to and from the meeting room by a designated GSA employee. If an attendee's name is not on the list provided to security in advance of the meeting, the attendee will still be allowed into the meeting, but admittance may be delayed.

If you wish to make a presentation, please contact and submit a copy of your presentation by March 11, 2011, to Ms. Clare Zebrowski, OUSD (AT&L) DPAP (DARS), 3060 Defense Pentagon, Room 3B855, Washington, DC 20302–3060; facsimile 703–602–0350. Please cite "Public Meeting, DFARS Case 2009–D043" in all correspondence related to this public meeting. The submitted presentations will be the only record of the public meeting. If you intend to have your presentation considered as a public comment to be considered in the formation of a final rule, the presentation must be submitted separately as a written comment as instructed below.

Special Accommodations: The public meeting is physically accessible to people with disabilities.

FOR FURTHER INFORMATION CONTACT: Ms. Clare Zebrowski, Telephone 703–602–0289; facsimile 703–602–0350. Please cite DFARS Case 2009–D043.

SUPPLEMENTARY INFORMATION:

A. Background

DoD published a proposed rule in the **Federal Register** on December 22, 2010 (75 FR 80427). DoD published an extension of the public comment period on February 18, 2011 (75 FR 9527). The

public comment period ends on April 8, 2011.

Ynette R. Shelkin,

Editor, Defense Acquisition Regulations System.

[FR Doc. 2011–5218 Filed 3–7–11; 8:45 am]

BILLING CODE 5001–08–P

DEPARTMENT OF THE INTERIOR

Fish and Wildlife Service

50 CFR Part 17

[Docket No. FWS–R8–ES–2010–0028; MO 92210–0–0008]

Endangered and Threatened Wildlife and Plants; 12-Month Finding on a Petition To List the Mt. Charleston Blue Butterfly as Endangered or Threatened

AGENCY: Fish and Wildlife Service, Interior.

ACTION: Notice of 12-month petition finding.

SUMMARY: We, the Fish and Wildlife Service (Service), announce a 12-month finding on a petition to list the Mt. Charleston blue butterfly (*Plebejus shasta charlestonensis*) (formerly in genus *Icaricia*) as endangered or threatened under the Endangered Species Act of 1973, as amended. After review of all available scientific and commercial information, we find that listing the Mt. Charleston blue butterfly is warranted. Currently, however, listing of the Mt. Charleston blue is precluded by higher priority actions to amend the Lists of Endangered and Threatened Wildlife and Plants. Upon publication of this 12-month petition finding, we will add the Mt. Charleston blue butterfly to our candidate species list. If an emergency situation develops with this subspecies that warrants an emergency listing, we will act immediately to provide additional protection. We will develop a proposed rule to list this subspecies as our priorities allow. We will make any determination on critical habitat during development of the proposed listing rule.

DATES: The finding announced in the document was made on March 8, 2011.

ADDRESSES: This finding is available on the Internet at *http://www.regulations.gov* at Docket Number FWS–R8–ES–2010–0028 and at *http://www.fws.gov/nevada.* Supporting documentation we used in preparing this finding is available for public inspection, by appointment, during normal business hours at the U.S. Fish and Wildlife Service, Nevada Fish and Wildlife Office, 4701 North Torrey Pines Drive, Las Vegas, NV 89130. Please submit any new information, materials, comments, or questions concerning this finding to the above street address.

FOR FURTHER INFORMATION CONTACT: Jill Ralston, Deputy Field Supervisor, Nevada Fish and Wildlife Office (*see* **ADDRESSES**); by telephone at (702) 515–5230; or by facsimile at (702) 515–5231. Persons who use a telecommunications device for the deaf (TDD) may call the Federal Information Relay Service (FIRS) at (800) 877–8339.

SUPPLEMENTARY INFORMATION:

Background

Section 4(b)(3)(B) of the Endangered Species Act of 1973, as amended (Act) (16 U.S.C. 1531 *et seq.*), requires that, for any petition containing substantial scientific or commercial information indicating that listing the species may be warranted, we make a finding within 12 months of the date of the receipt of the petition. In this finding, we determine that the petitioned action is: (a) Not warranted, (b) warranted, or (c) warranted, but the immediate proposal of a regulation implementing the petitioned action is precluded by other pending proposals to determine whether species are endangered or threatened, and expeditious progress is being made to add or remove qualified species from the Federal Lists of Endangered and Threatened Wildlife and Plants. Section 4(b)(3)(C) of the Act requires that we treat a petition for which the requested action is found to be warranted but precluded as though resubmitted on the date of such finding, that is, requiring a subsequent finding to be made within 12 months. We must publish these 12-month findings in the **Federal Register**.

Previous Federal Actions

On October 20, 2005, we received a petition dated October 20, 2005, from The Urban Wildlands Group, Inc., requesting that we emergency list the Mt. Charleston blue butterfly (Mt. Charleston blue) (*Plebejus shasta charlestonensis*) (formerly in genus *Icaricia*) as an endangered or threatened species. In a letter dated April 20, 2006, we responded to the petitioner that our initial review did not indicate that an emergency situation existed, but that if conditions changed an emergency rule could be developed. On May 30, 2007, we published a 90-day petition finding (72 FR 29933) in which we concluded that the petition provided substantial information indicating that listing of the Mt. Charleston blue may be warranted, and we initiated a status review. On February 17, 2010, the Center for Biological Diversity filed a complaint in United States District Court, Eastern District of California, indicating that the Service failed to take required actions on seven separate petitions for listed species found throughout the western United States including the Mt. Charleston blue. *On April 26, 2010, CBD amended its complaint in Center for Biological Diversity* v. *Salazar, U.S. Fish and Wildlife Service, Case No.: 1:10–cv–230–PLF (D.D.C.), adding an allegation that the Service failed to issue its 12-month petition finding on the Mount Charleston blue butterfly within the mandatory statutory timeframe.* This notice constitutes the 12-month finding on the October 20, 2005, petition to list the Mt. Charleston blue as endangered or threatened.

Species Information

Taxonomy

The Mt. Charleston blue is a distinctive subspecies of the wider ranging Shasta blue butterfly (*Plebejus shasta*), which is a member of the Lycaenidae family. Pelham (2008, pp. 25–26) recognized seven subspecies of Shasta blue: *P. s. shasta, P. s. calchas, P. s. pallidissima, P. s. minnehaha, P. s. charlestonensis, P. s. pitkinensis,* and *P. s. platazul.* The Mt. Charleston blue is known only from the high elevations of the Spring Mountains, located approximately 25 miles (mi) (40 kilometers (km)) west of Las Vegas in Clark County, Nevada (Austin 1980, p. 20; Scott 1986, p. 410). The first mention of the Mt. Charleston blue as a unique taxon was in 1928 by Garth, who recognized it as distinct from the species Shasta blue (Austin 1980, p. 20). Howe, in 1975 (as cited in Austin 1980, p. 20), described specimens from the Spring Mountains as *P. s. shasta* form *comstocki.* However, in 1976, Ferris (as cited in Austin 1980, p. 20) placed the Mt. Charleston blue with the wider ranging Minnehaha blue subspecies. Finally, Austin asserted that Ferris had not included populations from the Sierra Nevada in his study, and that in light of the geographic isolation and distinctiveness of the Shasta blue population in the Spring Mountains and the presence of at least three other well-defined races of butterflies endemic to the area, it was appropriate to name this population as the individual subspecies Mt. Charleston blue (*P. s. charlestonensis*) (Austin 1980, p. 20). Our use of the genus name *Plebejus,* rather than the synonym *Icaricia,* reflects recent treatments of butterfly taxonomy (Opler and Warren 2003, p. 30; Pelham 2008, p. 265).

The wingspan of Shasta blue species is 0.75 to 1 inch (in) (19 to 26 millimeters (mm)) (Opler 1999, p. 251). Males and females of Shasta blue are dimorphic. The upperside of males is dark to dull iridescent blue, and females are brown with a blue overlay. The species has a discal black spot on the forewing and a row of submarginal black spots on the hindwing. The underside is gray, with a pattern of black spots, brown blotches, and pale wing veins to give it a mottled appearance. The underside of the hindwing has an inconspicuous band of submarginal metallic spots (Opler 1999, p. 251). Based on morphology, the Mt. Charleston blue appears to be most closely related to the Great Basin populations of Minnehaha blue (Austin 1980, p. 23) and can be distinguished from other Shasta blue subspecies by the presence of sharper and blacker post medial spots on the underside of the hindwing (Scott 1986, p. 410).

Biology

The Mt. Charleston blue is generally thought to diapause (a period of suspended growth or development similar to hibernation) at the base of its larval host plant, Torrey's milkvetch (*Astragalus calycosus var. calycosus*), or in the surrounding substrate. The pupae of some butterfly species are known to persist in diapause up to 5 to 7 years (Scott 1986, p. 28). The number of years the Mt. Charleston blue can remain in diapause is unknown. Local experts have speculated that the Mt. Charleston blue may only be able to diapause for one season. However, in response to unfavorable environmental conditions, it is hypothesized that a prolonged diapause period may be possible (Scott 1986, pp. 26–30; Murphy 2006, p. 1; Datasmiths 2007, p. 6; Boyd and Murphy 2008, p. 22).

The typical flight and breeding period for the butterfly is early July to mid-August with a peak in late July, although the subspecies has been observed as early as mid-June and as late as mid-September (Austin 1980, p. 22; Boyd and Austin 1999, p. 17; Forest Service 2006a, p. 9). As with most butterflies, the Mt. Charleston blue typically flies during sunny conditions, which are particularly important for this subspecies given the cooler air temperatures at high elevations (Weiss *et al.* 1997, p. 31). Excessive winds also deter flight of most butterflies, although Weiss *et al.* (1997, p. 31) speculate this may not be a significant factor for the Mt. Charleston blue given its low-to-the-ground flight pattern.

Like all butterfly species, both the phenology (timing) and number of Mt. Charleston blue individuals that emerge and fly to reproduce during a particular year are reliant on the combination of many environmental factors that may constitute a successful ("favorable") or unsuccessful ("poor") year for the subspecies. Other than observations by surveyors, little information is known regarding these aspects of the subspecies' biology, since the key determinants for the interactions among the butterfly's flight and breeding period, larval host plant, and environmental conditions have not been specifically studied. Observations indicate that above or below average precipitation, coupled with above or below average temperatures, influence the phenology of this subspecies (Weiss *et al.* 1997, pp. 2–3 and 32; Boyd and Austin 1999, p. 8) and are likely responsible for the fluctuation in population numbers from year to year (Weiss *et al.* 1997, pp. 2–3 and 31–32).

Most butterfly populations exist as regional metapopulations (groups of spatially separated populations that may function as single populations due to occasional interbreeding) (Murphy *et al.* 1990, p. 44). Boyd and Austin (1999, pp. 17 and 53) indicate this is true of the Mt. Charleston blue. Small habitat patches tend to support smaller butterfly populations that are frequently extirpated by events that are part of normal variation (Murphy *et al.* 1990, p. 44). Boyd and Austin (1999, p. 17) suggest smaller colonies of the Mt. Charleston blue may be ephemeral in the long term, with the larger colonies of the subspecies more likely than smaller populations to persist in "poor" years, when environmental conditions do not support the emergence, flight, and reproduction of individuals. The ability of the Mt. Charleston blue to move between habitat patches has not been studied; however, field observations suggest the subspecies has low vagility (capacity or tendency of a species to move about or disperse in a given environment), on the order of 10 to 100 meters (m) (33 to 330 feet (ft)) (Weiss *et al.* 1995, p. 9), and nearly sedentary behavior (Datasmiths 2007, p. 21; Boyd and Murphy 2008, pp. 3 and 9). Furthermore, dispersal of lycaenid butterflies, in general, is limited and on the order of hundreds of meters (Cushman and Murphy 1993, p. 40). Based on this information, the likelihood of long-distance dispersal is low for the Mt. Charleston blue.

Habitat

Weiss *et al.* (1997, pp. 10–11) describe the natural habitat for the Mt. Charleston blue butterfly as relatively flat ridgelines above 2,500 m (8,200 ft), but isolated individuals have been observed as low as 2,000 m (6,600 ft). Boyd and Murphy (2008, p. 19) indicate that areas occupied by the subspecies feature exposed substrates with limited or no canopy cover or shading, and are on flats or mild slopes with moderate aspects. Like most butterfly species, the Mt. Charleston blue is dependent on plants both during larval development (larval host plants) and the adult butterfly flight period (nectar plants). The Mt. Charleston blue requires areas that support Torrey's milkvetch, the only known larval host plant for the subspecies (Weiss *et al.* 1994, p. 3; Weiss *et al.* 1997, p. 10; Datasmiths 2007, p. 21), as well as primary nectar plants. Torrey's milkvetch and Clokey fleabane (*Erigeron clokeyi*) are the primary nectar plants for the subspecies; however, butterflies have also been observed nectaring on Lemmon's bitterweed (*Hymenoxys lemmonii*) and *Aster* sp. (Weiss *et al.* 1994, p. 3; Boyd 2005, p. 1; Boyd and Murphy 2008, p. 9).

The best available habitat information relates mostly to the Mt. Charleston blue's larval host plant, with little to no information available characterizing the butterfly's interactions with its known nectar plants or other elements of its habitat; thus, the habitat information discussed in this document centers on Torrey's milkvetch. Studies are currently underway to better understand the habitat requirements and preferences of the Mt. Charleston blue (Thompson and Garrett 2010, p. 2; Pinyon 2010a, p. 1). Torrey's milkvetch is a small, low-growing, perennial herb that grows in open areas between 5,000 to 10,800 ft (1,520 to 3,290 m) in subalpine, bristlecone, and mixed-conifer vegetation communities of the Spring Mountains. Within the alpine and subalpine range of the Mt. Charleston blue, Weiss *et al.* (1997, p. 10) observed the highest densities of Torrey's milkvetch in exposed areas and within canopy openings and lower densities in forested areas.

Weiss *et al.* (1997, p. 31) describe favorable habitat for the Mt. Charleston blue as having high densities (more than 10 plants per square meter) of Torrey's milkvetch. Weiss *et al.* (1995, p. 5) and Datasmiths (2007, p. 21) suggest that in some areas butterfly habitat may be dependent on old or infrequent disturbances that create open areas. Vegetation cover within disturbed patches naturally becomes higher over time through natural succession, gradually becoming less favorable to the butterfly. Therefore, we conclude that open areas with relatively little grass cover and visible mineral soil and high

densities of host plants support the highest densities of butterflies (Boyd 2005, p. 1; Service 2006a, p. 1). During 1995, an especially high population year, Mt. Charleston blue were observed in small habitat patches and in open forested areas where Torrey's milkvetch was present in low densities, on the order of 1 to 5 plants per square meter (Weiss *et al.* 1997, p. 10; Newfields 2006, pp. 10 and C5). Therefore, areas with lower densities of the host plant may also be important to the subspecies, as these areas may be intermittently occupied or may be important for dispersal.

Fire suppression and other management practices have likely limited the formation of new habitat for the Mt. Charleston blue. The U.S. Forest Service (USFS) began suppressing fires on the Spring Mountains in 1910 (Entrix 2007, p. 111). Throughout the Spring Mountains, fire suppression has resulted in higher densities of trees and shrubs (Amell 2006, pp. 2–3) and a transition to a closed-canopy forest with shade-tolerant understory species (Entrix 2007, p. 112) that is generally less suitable for the Mt. Charleston blue. Boyd and Murphy (2008, pp. 23 and 25) hypothesized that the loss of presettlement vegetation structure over time has caused the Mt. Charleston blue's metapopulation dynamics to collapse in Upper Lee Canyon. Similar losses of suitable butterfly habitat in woodlands and their negative effect on butterfly populations have been documented (Thomas 1984, pp. 337–338). Natural landscape processes have been modified in the Spring Mountains. Now, the disturbed landscape at the Las Vegas Ski and Snowboard Resort (LVSSR) provides important habitat for the Mt. Charleston blue (The Urban Wildlands Group, Inc. 2005, p. 2). Periodic maintenance (removal of trees and shrubs) of the ski runs has effectively arrested forest succession on the ski slopes and serves to maintain conditions favorable to the Mt. Charleston blue, and to its host and nectar plants. However, the ski runs are not specifically managed to benefit habitat for this subspecies and operation activities regularly modify Mt. Charleston blue habitat or prevent host plants from reestablishing in disturbed areas.

Range and Current Distribution

Based on current and historical occurrences or locations documented in the petition or identified in the State of Nevada Natural Heritage Program database (The Urban Wildlands Group, Inc. 2005, pp. 1–3; Service 2006b, pp. 2–4), the geographic range of the Mt. Charleston blue is primarily on the east side of the Spring Mountains, centered on lands managed by the USFS in the Spring Mountains National Recreation Area of the Humboldt-Toiyabe National Forest within Upper Kyle and Lee Canyons, Clark County, Nevada. The majority of the occurrences or locations are in the Upper Lee Canyon area, while a few are in Upper Kyle Canyon. Table 1 lists the various locations of the Mt. Charleston blue that constitute the subspecies' current and historical range.

TABLE 1—LOCATIONS OR OCCURRENCES OF THE MT. CHARLESTON BLUE BUTTERFLY SINCE 1928 AND THE STATUS OF THE BUTTERFLY AT THE LOCATIONS

Location name	First/last time observed	Most recent survey year(s)	Status	Primary references
1. South Loop Trail, Upper Kyle Canyon.	1995/2010	2007, 2008, 2010	Known occupied, adults consistently observed.	NNHP 2007; Weiss *et al.* 1997; Kingsley 2007; Boyd 2006; Datasmiths 2007; SWCA 2008, Pinyon 2010a, Thompson and Garrett 2010.
2. LVSSR, Upper Lee Canyon	1963/2010	2007, 2008, 2010	Known occupied, adults consistently observed.	NNHP 2007; Weiss *et al.* 1994; Weiss *et al.* 1997; Boyd and Austin 2002; Boyd 2006; Newfields 2006; Datasmiths 2007; Boyd and Murphy 2008, Thompson and Garrett 2010.
3. Foxtail Upper Lee Canyon ...	1995/1998	2006, 2007	Presumed occupied, adults intermittently observed.	NNHP 2007; Boyd and Austin 1999; Boyd 2006; Datasmiths 2007.
4. Youth Camp, Upper Lee Canyon.	1995/1995	2006, 2007	Presumed occupied, adults intermittently observed.	Weiss *et al.* 1997; Boyd 2006; Datasmiths 2007.
5. Gary Abbott, Upper Lee Canyon.	1995/1995	2006, 2007	Presumed occupied, adults intermittently observed.	NNHP 2007; Weiss *et al.* 1997; Boyd 2006; Datasmiths 2007.
6. Lower LVSSR Parking, Upper Lee Canyon.	1995/2002	2007, 2008	Presumed occupied, adults intermittently observed.	Urban Wildlands Group, Inc. 2005; Weiss *et al.* 1997; Boyd 2006; Datasmiths 2007; Boyd and Murphy 2008.
7. Mummy Spring, Upper Kyle Canyon [1].	1995/1995	2006	Presumed occupied, adults intermittently observed.	NNHP 2007; Weiss *et al.* 1997; Boyd 2006.
8. Lee Meadows, Upper Lee Canyon.	1965/1995	2006, 2007	Presumed occupied, adults intermittently observed.	NNHP 2007; Weiss *et al.* 1997; Boyd 2006; Datasmiths 2007.
9. Bonanza Trail	1995/1995	2006, 2007	Presumed occupied	Weiss *et al.* 1997; Boyd 2006; Kingsley 2007.
10. Upper Lee Canyon holotype [1].	1963/1976	2006, 2007	Presumed extirpated	NNHP 2007; Weiss *et al.* 1997; Boyd 2006; Datasmiths 2007.
11. Cathedral Rock, Kyle Canyon.	1972/1972	2007	Presumed extirpated	NNHP 2007; Weiss *et al.* 1997; Datasmiths 2007.
12. Upper Kyle Canyon Ski Area [1].	1965/1972	1995	Presumed extirpated	NNHP 2007; Weiss *et al.* 1997.
13. Old Town, Kyle Canyon [2] ...	1970s	1995	Presumed extirpated	The Urban Wildlands Group, Inc. 2005.
14. Deer Creek, Kyle Canyon ..	1950	unknown	Presumed extirpated	NNHP 2007.
15. Willow Creek	1928	unknown	Presumed extirpated	NNHP 2007; Weiss *et al.* 1997, Thompson and Garrett 2010.

[1] Location is not mentioned in the petition.
[2] Location is not identified in the Nevada Natural Heritage Program database.

We presume that the Mt. Charleston blue is extirpated from a location when it has not been recorded at that location through formal surveys or informal observation for more than 20 years. We selected a 20-year time period because it would likely allow for local extirpation and recolonization events (metapopulation dynamics) to occur and would be enough time for succession or other vegetation shifts to render the habitat unsuitable (*see* discussion in "Biology" and "Habitat" sections above). Using this criterion, the Mt. Charleston blue is considered to be "presumed extirpated" from 6 of the 14 known locations (Locations 9–14 in Table 1) (The Urban Wildlands Group, Inc. 2005, pp. 1–3; Service 2006b, pp. 8–9). Of the remaining eight locations, six locations or occurrences are "presumed occupied" by the subspecies (Locations 3–8 in Table 1) (The Urban Wildlands Group, Inc. 2005, pp. 1–3; Service 2006b, pp. 7–8).

This category is defined as a location within the current known range of the subspecies where adults have been intermittently observed and there is a potential for diapausing larvae to be present. The butterfly likely exhibits metapopulation dynamics at these locations, where the subspecies is subject to local extirpation, with new individuals emigrating from nearby "known occupied" habitat, typically during years when environmental conditions are more favorable to emergence from diapause and the successful reproduction of individuals (*see* discussion in "Habitat" section above). At some of these presumed occupied locations (Locations 4, 5, 7, 8 and 9 in Table 1), the Mt. Charleston blue has not been recorded through formal surveys or informal observation since 1995 by Weiss *et al.* (1997, pp. 1–87). Currently, we consider the occurrence at Mummy Spring as presumed occupied; however, this location is not near known occupied habitat and may be extirpated.

We consider the remaining two Mt. Charleston blue locations or occurrences to be "known occupied" (Locations 1 and 2 in Table 1). The South Loop Trail location in Upper Kyle Canyon (Location 1 in Table 1) is considered known occupied because: (1) The butterfly was observed on the site in 1995, 2002, 2007, and 2010 (Service 2007, pp. 1–2; Kingsley 2007, p. 5; Pinyon 2010, pp. 1–2; Thompson and Garrett 2010, p. 5); and (2) the high quality of the habitat is in accordance with host plant densities of 10 plants per square meter as described in Weiss *et al.* (1997, p. 31; Kingsley 2007, pp. 5 and 10), and is in an area of relatively large size (18.7 acres (ac) (7.6 hectares (ha)) (SWCA 2008, pp. 2 and 5). The South Loop Trail area appears to be the most important remaining population area for the Mt. Charleston blue (Boyd and Murphy 2008, p. 21). The South Loop Trail runs along the ridgeline between Griffith Peak and Charleston Peak and is located within the Mt. Charleston Wilderness. This area was field mapped using a global positioning system unit and included the larval host plant, Torrey's milkvetch, as well as occurrences of two known nectar plants, Lemmon's bitterweed and Clokey fleabane (SWCA 2008, pp. 2 and 5). Adjacent to this "known occupied" habitat of 18.7 ac (7.6 ha) occurs approximately 40 ac (17 ha) of additional habitat containing Lemmon's bitterweed and Clokey fleabane, as well as a smaller patch of Torrey's milkvetch (1.6 ac) (0.65 ha) (SWCA 2008, pp. 2 and 5).

We consider LVSSR in Upper Lee Canyon (Location 2 in Table 1) to be "known occupied" because: (1) The butterfly was first recorded at LVSSR in 1963 (Austin 1980, p. 22) and has been consistently observed at LVSSR every year between 1995 and 2006 (with the exception of 1997 when no surveys were performed, and in recent years when the species was not observed) (Service 2007, pp. 1–2) and in 2010 (Thompson and Garrett 2010, p. 5); and (2) the ski runs contain two areas of high-quality butterfly habitat in accordance with host plant densities of 10 plants per square meter as described in Weiss *et al.* (1997, p. 31). These areas are LVSSR #1(2.4 ac (0.97 ha)) and LVSSR #2 (1.3 ac (0.53 ha)), which have been mapped using a global positioning system unit and field verified. Thus, across its current range, the Mt. Charleston blue is known to persistently occupy less than 22.4 ac (9.1 ha) of habitat.

Status and Trends

The Mt. Charleston blue has been characterized as particularly rare, but common in some years (Boyd and Austin 1999, p. 17; The Urban Wildlands Group, Inc. 2005, p. 2). The 1995 season was the last year the butterfly was present in high numbers. Variations in precipitation and temperature that affect both the Mt. Charleston blue and its larval host plant are likely responsible for the fluctuation in population numbers from year to year (Weiss *et al.* 1997, pp. 2–3 and 31–32). The total population of the Mt. Charleston blue is unknown. We do not have population estimates for the butterfly or specific information showing a change in numbers; however, it appears the population has declined since the last high-population year in 1995 (Murphy 2006, pp. 1–2).

Recent survey information indicates the Mt. Charleston blue population appears to be extremely low. In 2006, surveys within presumed occupied habitat at LVSSR located one individual butterfly adjacent to a pond that holds water for snowmaking (Newfields 2006, pp. 10, 13, and C5). In a later report, the accuracy of this observation was questioned and considered inaccurate (Newfields 2008, p. 27). In 2006, Boyd (2006, pp. 1–2) conducted focused surveys for the subspecies at nearly all previously known locations and within potential habitat along Griffith Peak, North Loop Trail, Bristlecone Trail, and South Bonanza Trail but did not observe the butterfly at any of these locations. In 2007, surveys were again conducted in previously known locations in Upper Lee Canyon and LVSSR, but no butterflies were recorded (Datasmiths 2007, p. 1; Newfields 2008, pp. 21–24). In 2007, two Mt. Charleston blue butterflies were sighted on different dates at the same location on the South Loop Trail in Upper Kyle Canyon (Kingsley 2007, p. 5). In 2008, butterflies were not observed during focused surveys of Upper Lee Canyon and the South Loop Trail (Boyd and Murphy 2008, pp. 1–3; Boyd 2008, p. 1; SWCA 2008, p. 6), although it is possible adult butterflies may have been missed on South Loop Trail because the surveys were performed very late in the season. No formal surveys were conducted in 2009; however, no individuals were seen during the few informal attempts made to observe the species.

Adults of the Mt. Charleston blue were most recently observed in 2010 in the South Loop Trail area and LVSSR. From reports of several adult surveys in July and August at the South Loop area (Thompson and Garrett 2010; Pinyon 2010a, pp. 1–2; Pinyon 2010b), the highest total counted among the days this area was surveyed was 17 on July 28 (Pinyon 2010b). One adult was observed in Lee Canyon at LVSSR on July 23, 2010, but no other adults were detected at LVSSR on surveys conducted August 2, 9, and 18, 2010 (Thompson and Garrett 2010, pp. 4–5). Final reports have not been completed for these projects and the results are considered preliminary.

The availability of known larval and nectar plants does not appear to be correlated to the recent low population numbers of the butterfly as the host plants continue to persist at previously occupied locations and throughout the Spring Mountains. The low number of butterflies observed during the 2006,

2007, 2008, and 2010 seasons could be partially attributed to extreme weather (*e.g.,* heavy precipitation events and drought). Prior to 2005, there were numerous years of drought, followed by a record snow in the winter of 2004–2005. In 2006 and 2007, the area experienced dry winters and springs and severe thunderstorms during the summers and flight periods. Based on the available survey information, the low number of sightings in recent years is likely the result of an already small population size, exacerbated by unfavorable weather conditions. Historical and recent survey information for this subspecies is very limited or unavailable in regard to population data. Thus, we focused our threats analysis on assessed threats at known occupied and presumed occupied locations (summarized in Table 1).

Summary of Information Pertaining to the Five Threat Factors

Section 4 of the Act (16 U.S.C. 1533) and implementing regulations (50 CFR part 424) set forth procedures for adding species to the Federal Lists of Endangered and Threatened Wildlife and Plants. Under section 4(a)(1) of the Act, a species may be determined to be endangered or threatened based on any of the following five factors:

(A) The present or threatened destruction, modification, or curtailment of its habitat or range;

(B) Overutilization for commercial, recreational, scientific, or educational purposes;

(C) Disease or predation;

(D) The inadequacy of existing regulatory mechanisms; or

(E) Other natural or manmade factors affecting its continued existence.

We summarize below information regarding the status of and threats to this subspecies in relation to the five factors in section 4(a)(1) of the Act. In making our 12-month finding, we considered and evaluated all scientific and commercial information in our files, including information received in response to our request for information in the notice of 90-day petition finding and initiation of status review (72 FR 29933), and additional scientific information from ongoing species surveys as they became available. In response to the information request, we received two letters from private organizations that provided information and comments on the Mt. Charleston blue.

Factor A: The Present or Threatened Destruction, Modification, or Curtailment of the Species' Habitat or Range

Fire Suppression, Succession, and Nonnative Species

Butterflies have extremely specialized habitat requirements (Thomas 1984, p. 337). Changes in vegetation structure and composition as a result of natural processes are a serious threat to butterfly populations because these changes can disrupt specific habitat requirements (Thomas 1984, pp. 337–341; Thomas *et al.* 2001, pp. 1791–1796). Cushman and Murphy (1993, p. 4) determined 28 at-risk lycaenid butterfly species, including the Mt. Charleston blue, to be dependent on one or two closely related host plants. Many of these host plants are dependent on early successional environments. Butterflies that specialize on such plants must track an ephemeral resource base that itself depends on unpredictable and perhaps infrequent ecosystem disturbances. For such butterfly species, local extinction events are both frequent and inevitable (Cushman and Murphy 1993, p. 4). The Mt. Charleston blue may, in part, depend on disturbances that open up the subalpine canopy and create conditions more favorable to its host plant, Torrey's milkvetch, and nectar resources (Weiss *et al.* 1995, p. 5; Boyd and Murphy 2008, pp. 22–28) (*see* Habitat section, above).

Fire suppression in the Spring Mountains has resulted in long-term successional changes including increased forest area and forest structure (higher canopy cover, more young trees, and more trees intolerant of fire) (Nachlinger and Reese 1996, p. 37; Amell 2006, pp. 6–9; Boyd and Murphy 2008, pp. 22–28; Denton *et al.* 2008, p. 21). Frequent low-severity fires would have maintained an open forest structure characterized by uneven-aged stands of fire-resistant ponderosa pine trees (Amell 2006, p. 5) in lower elevations. The lower-elevation habitats of the Mt. Charleston blue has likely been the most affected by fire suppression as indicated by Provencher's 2008 Fire Regime Condition Class analysis of the Spring Mountains (p. 18) in which higher-elevation biophysical settings departed less from the natural range of variability than those at middle elevations.

Large-diameter ponderosa pine trees with multiple fire scars in upper Lee and Kyle Canyons indicate that low-severity fires historically burned through mixed-conifer forests within the range of the Mt. Charleston blue (Amell 2006, p. 3). Open mixed-conifer forests in the Spring Mountains were likely characterized by more abundant and diverse understory plant communities compared to current conditions (Entrix 2007, pp. 73–78). These successional changes have been hypothesized to have contributed to the decline of the Mt. Charleston blue because of reduced densities of larval and nectar plants, decreased solar radiation, and inhibited butterfly movements that subsequently determine colonization or recolonization processes (Weiss *et al.* 1997, p. 26; Boyd and Murphy 2008, pp. 22–28). Boyd and Murphy (2008, p. 23) noted that important habitat characteristics required by Mt. Charleston blue—Torrey's milkvetch and preferred nectar plants occurring together in open sites not shaded by tree canopies—would have occurred more frequently across a more open, forested landscape compared to the current denser forested landscape. Not only would the changes in forest structure and understory plant communities result in habitat loss and degradation for the Mt. Charleston blue across a broad spatial scale, a habitat matrix dominated by denser forest also may be impacting key metapopulation processes by reducing probability of recolonization following local population extirpations in remaining patches of suitable habitat (Boyd and Murphy 2008, p. 25).

The introduction of forbs, shrubs, and nonnative grasses can be a threat to butterfly populations because these species can compete with, and decrease, the quality and abundance of larval host plant and adult nectar sources. This has been observed for many butterfly species including the Quino checkerspot butterfly (*Euphydryas editha quino*) (62 FR 2313; January 16, 1997) and Fender's blue butterfly (*Icaricia icarioides fenderi*) (65 FR 3875; January 25, 2000). Datasmiths (2007, p. 21) also suggest suitable habitat patches of Torrey's milkvetch are often, but not exclusively, associated with older or infrequent disturbance. Weiss *et al.* (1995, p. 5) note that a colony once existed on the Upper Kyle Canyon Ski Area (Location 11 in Table 1), but since the ski run was abandoned no butterflies have been collected there since 1965. Boyd and Austin (2002, p. 13) observe that the butterfly was common at Lee Meadows (Location 8 in Table 1) in the 1960s, but became uncommon at the site because of succession and a potential lack of disturbance. Using an analysis of host plant density, Weiss *et al.* (1995 p. 5) concluded that Lee Meadows does not have enough host plants to support a population over the long term.

Succession, coupled with the introduction of nonnative species, is also believed to be the reason the Mt. Charleston blue is no longer present at the old town site in Kyle Canyon (Location 12 in Table 1) and at the holotype site in Upper Lee Canyon (Location 9 in Table 1) (Urban Wildlands Group, Inc. 2005, p. 3; Boyd and Austin 1999, p. 17).

Management of nonnative species within butterfly habitat is a threat to the butterfly. As mentioned previously (*see* Habitat section), periodic maintenance (removal of trees and shrubs) of the ski runs has effectively arrested succession on the ski slopes and maintains conditions that can be favorable to the Mt. Charleston blue. However, the ski runs are not specifically managed to benefit habitat for this subspecies, and operation activities (including seeding of nonnative species) regularly modify butterfly habitat or prevent host plants from reestablishing in disturbed areas. Weiss *et al.* (1995, pp. 5–6) suggest that the planting of annual grasses and *Melilotus* for erosion control at LVSSR is a threat to Mt. Charleston blue habitat. Titus and Landau (2003, p. 1) observed that vegetation on highly and moderately disturbed areas of the LVSSR ski runs are floristically very different from natural clearings in the adjacent forest that support the butterfly. Seeding nonnative species for erosion control was discontinued in 2005; however, because of erosion problems during 2006 and 2007, and the lack of native seed, LVSSR resumed using a nonnative seed mix, particularly in the lower portions of the ski runs (not adjacent to Mt. Charleston blue habitat) where erosion problems persist.

Based on available information, it appears that in at least four of the six locations where the butterfly historically occurred, suitable habitat is no longer present due to vegetation changes attributable to succession, the introduction of nonnative species, or a combination of the two.

Recreation Development Projects

As previously detailed in the "Range and Current Distribution" section of this finding, the Mt. Charleston blue is a narrow endemic subspecies that is currently known to occupy two locations and presumed to occupy six others. This distribution is on lands managed by the USFS (including LVSSR, which is operated under a USFS special use permit) in the Spring Mountains National Recreation Area within the Humboldt-Toiyabe National Forest. We analyzed USFS' recreation development projects from 2000 to 2007 to determine if habitat impacts resulting from completed and pending projects are a threat to the subspecies at these locations, as cited in the petition and referenced in the 90-day petition finding. In addition to a fuels reduction project, we identified seven projects that have removed or impacted butterfly habitat in Upper Lee Canyon, where the butterfly is known or presumed to be present. We determined that an eighth impact identified in the petition and 90-day petition finding, an unsanctioned trail that bisects habitat on the South Loop Trail in Upper Kyle Canyon, is not a threat to the butterfly (Kingsley 2007, p. 17).

In general, it is difficult to know the full extent of impacts to the Mt. Charleston blue as a result of these projects because butterfly habitat was not mapped for the majority of them nor were some project areas surveyed prior to implementation. The majority of impacts associated with these projects have not been mitigated, and some of the impacted areas have not recovered. Given the slow natural rate of recovery, the pace of restoration efforts (*see* Factor D), and the potential for recurrent disturbance at many of these sites, we do not expect these impacted areas to provide butterfly habitat for many years to come, unless noted below. The following is a summary of the recreation development projects that have removed or impacted Mt. Charleston blue habitat from 2000 to 2010.

(1) During 2000 or 2001, a series of earthen berms were constructed at the top of a ski run at LVSSR. These berms were created by scraping topsoil from the ski run in an area known to support high densities of Torrey's milkvetch. This activity caused loss and degradation of an unknown area of presumed occupied butterfly habitat at LVSSR, Upper Lee Canyon (Location 2 in Table 1) (The Urban Wildlands Group, Inc. 2005, p. 3; Service 2006a, pp. 1–5). We assume, based on the level of soil disturbance, this activity would have also killed any larvae, pupae, or eggs present. Based on the best available information, Torrey's milkvetch has not recolonized the area (Service 2006a, pp. 1–5).

(2) In 2003, the Lee Canyon water system was repaired and expanded, which included construction of new and replacement waterlines through presumed occupied butterfly habitat on Foxtail Ridge adjacent to the Lee Canyon Youth Camp and the lower LVSSR parking lot (Location 3 in Table 1) (Forest Service 2003a, pp. 1–6). Resource surveys did not include butterfly host plants, and the extent of impacts was not calculated (Forest Service 2003b, pp. 21–22). Based on the most recent survey, Torrey's milkvetch still occurs on Foxtail Ridge (Datasmiths 2007, pp. 26–27), and it appears that the Lee Canyon water system project area has been recolonized by Torrey's milkvetch (Kingsley 2007, p. 17); however, the Mt. Charleston blue has not been observed at this location since 1998.

(3) In 2004, the lower LVSSR parking lot was converted into a temporary water storage basin (Forest Service 2004a, p. 1). This activity included excavation of the parking lot and the construction of temporary berms to hold water. Surveys for butterfly host plants were not performed, but butterfly host plants were noted in the project area as part of a rare plant survey (Hiatt 2004, p. 4). Any larvae, pupae, and eggs, along with all vegetation and soil seed bank, would likely have been killed while the basin was filled with water. Approximately 2 ac (0.81 ha) of presumed occupied butterfly habitat were impacted as a result of the project (Location 6 in Table 1) (The Urban Wildlands Group, Inc. 2005, p. 3). The parking lot continues to be used for overflow parking. Recent resource surveys of the area for the proposed expansion of the parking lot (*see* future projects discussion below) indicate host plants have not returned to the parking area and remain along the perimeter (Datasmiths 2007, pp. 26–27).

(4) In 2004, the Entrance Walkway Grade Improvement Project permanently removed (by paving) 0.186 ac (0.075 ha) of Mt. Charleston blue presumed occupied habitat near the main LVSSR parking site for the construction of a walkway (Forest Service 2004b, pp. 21–22; Forest Service 2004c, pp. 1–3).

(5) In 2004 and 2005, the LVSSR Snowmaking Line Replacement Project impacted approximately 7 ac (2.8 ha) of presumed occupied butterfly habitat on the ski runs (Forest Service 2006b, p. 1) and approximately 0.2 ac (0.08 ha) of known occupied habitat at LVSSR, Upper Lee Canyon (Location 2 in Table 1) (The Urban Wildlands Group, Inc. 2005, p. 3; Service 2006a, pp. 1–5; Forest Service 2004c, pp. 1–3; Forest Service 2004d, p. 9; Forest Service 2006b, pp. 1–9). Given the type of disturbance, we presume any butterfly larvae, pupae, and eggs would have been buried or crushed as a result of trenching and equipment access. Revegetation of butterfly habitat impacted from this construction was required (Forest Service 2004c, pp. 1–2; 2004d, p. 9–10), but there are no records available in our files that indicate it has been completed (*see* Factor D).

(6) In 2005, the chairlift #1 at LVSSR was replaced. All vegetation was removed within equipment travel corridors, laydown areas, and construction areas in approximately 4.5 ac (1.8 ha) of presumed occupied butterfly habitat (Location 2 in Table 1) (Forest Service 2006b, p. 2). Given the level of disturbance, we presume any butterfly larvae, pupae, and eggs would have been buried or crushed as a result of trenching and equipment access. Revegetation of butterfly habitat impacted from this construction was required (Forest Service 2005c, p. 2; Forest Service 2005d, pp. 12–14; Forest Service 2005e, pp. 11–12), but there are no records available in our files that indicate it has been completed (*see* Factor D).

(7) Expansion of the snowmaking pond at LVSSR was first proposed in June 2005 and would have permanently impacted 0.48 ac (0.18 ha) of presumed occupied butterfly habitat (Forest Service 2005a, pp. 1–25). The project was revised to reduce impacts in December 2007 (Forest Service 2007b, pp. 1–31) and again in June 2009. Plans for implementation included measures to minimize the amount of area impacted and mitigate for the loss of any butterfly habitat (Forest Service 2009a, p. 18). Construction of the snowmaking pond expansion was initiated and completed in 2010. The construction footprint was adjacent to one patch of Torrey's milkvetch, and overlapped another patch (Forest Service 2010b, Figure 1). A total area of 0.055 ac (0.022 ha) of Torrey's milkvetch habitat patches was impacted by pond expansion construction (Forest Service 2010b, Table 1). Recommendations to mitigate for impacted habitat have been prepared (Forest Service 2010b, pp. 1–5) but not yet implemented. An additional patch of previously undocumented Torrey's milkvetch was observed within the construction zone in May 2010 (Forest Service 2010a, p. 2), and is not included as an area for which mitigation is to be performed (Forest Service 2010b, pp. 1–5).

Future projects are also a threat to the Mt. Charleston blue and its habitat. Four recently approved or future projects could impact Mt. Charleston blue habitat in Upper Lee Canyon, and are summarized below.

(1) Expansion of the lower parking lot at LVSSR was proposed in June 2005 (Forest Service 2005a, pp. 1–25) and, after revisions to reduce impacts to the subspecies' habitat, was reproposed in December 2007 (Forest Service 2007b, pp. 1–31). Expansion of the lower LVSSR parking lot would result in the permanent loss of 2.4 ac (0.97 ha) of previously disturbed butterfly habitat and 0.81 ac (0.33 ha) of undisturbed presumed occupied butterfly habitat (Location 6 in Table 1) (Forest Service 2007b, p. 12). Planning and environmental documents are completed for the project; however, final authorization by the USFS has not occurred and is currently on hold due to concerns about impacts to Mt. Charleston blue (Forest Service 2009a, p. 1).

(2) The snowmaking system improvements project (new snowmaking lines) at LVSSR was proposed in June 2005 (Forest Service 2005a, pp. 1–2). As proposed, the snowmaking lines expansion project would have permanently impacted at that time approximately 8.9 ac (3.6 ha) of known occupied butterfly habitat along the two primary ski runs where known occupied habitat has been delineated for the Mt. Charleston blue (Location 2 in Table 1). The USFS stopped planning efforts for this project in 2007 based on the potential impacts to the Mt. Charleston blue (Forest Service 2007b, pp. 2).

(3) A January 2008 draft Master Development Plan for LVSSR proposes to improve, upgrade, and expand the existing facilities to provide year-round recreational activities. The plan proposes to add winter activities such as tubing, MiniZ, snowshoeing, Nordic skiing, climbing wall, and Euro-bungee, by widening existing runs to create "gladed" areas that would provide larger sliding areas (Ecosign 2008, pp. I–3–I–4). The plan proposes to add summer activities and facilities, including mountain biking and bike park, alpine slides, concerts, hiking, mountain boards, ziptreks, and stargazing (Ecosign 2008, pp. I–3–I–4). Summer activities would impact the butterfly and its known occupied and presumed occupied habitat (Location 2 in Table 1) by attracting visitors in higher numbers during the time of year when larvae and host plants are especially vulnerable to trampling. The Master Development Plan is in draft form and has not yet been approved by the USFS; therefore, no estimate of the potential area of impact is available.

(4) Currently the USFS is planning to restore eroded stream channels in Lee Meadows. Repairs to the channels are expected to impact presumed occupied butterfly habitat mapped at 1.2 ac (0.50 ha) (Location 8 in Table 1) (Forest Service 2009b, p. 10; Datasmiths 2007, p. 27). Project implementation began in 2010 and is expected to be completed in 2011, and includes measures to minimize impacts to, and compensate for the loss of, butterfly habitat (Forest Service 2009b, p. 10).

Fuels Reduction Projects

In December 2007, the USFS approved the Spring Mountains National Recreation Area Hazardous Fuels Reduction Project (Forest Service 2007a, pp. 1–127). This project will result in tree removals and vegetation thinning in three presumed occupied butterfly locations in Upper Lee Canyon, including Foxtail Ridge, Lee Canyon Youth Camp, and Lee Meadows, and result in impacts to approximately 32 ac (13 ha) of presumed occupied habitat that has been mapped in Upper Lee Canyon (Locations 3, 4 and 8 in Table 1) (Forest Service 2007a, Appendix A–Map 2; Datasmiths 2007, p. 26). Manual and mechanical clearing of shrubs and trees will be repeated on a 5- to 10-year rotating basis and will result in direct impacts to the butterfly and its habitat, including crushing or removal of host plants and diapausing larvae (if present). Implementation of this project began in the spring of 2008 throughout the Spring Mountains National Recreation Area, including Lee Canyon.

Although Boyd and Murphy (2008, p. 26) recommended increased forest thinning to improve habitat quality for the Mt. Charleston blue, this project was designed to reduce wildfire risk to life and property in the Spring Mountains National Recreation Area wildland urban interface (Forest Service 2007a, p. 6), not to improve Mt. Charleston blue habitat. Mt. Charleston blues require larval host plants in exposed areas not shaded by forest canopy cover because canopy cover reduces solar exposure during critical larval feeding periods (Boyd and Murphy 2008, p. 23). Shaded fuel breaks created for this project may not be open enough to create or significantly improve Mt. Charleston blue habitat. Also, shaded fuel breaks for this project are concentrated along access roads, property boundaries, campgrounds, picnic areas, administrative sites, and communications sites, and are not of sufficient spatial scale to reduce the threat identified above resulting from fire suppression and succession.

Although this project may result in increased understory herbaceous plant productivity and diversity, there are short-term risks to the butterfly associated with project implementation. In recommending increased forest thinning to improve Mt. Charleston blue habitat, Boyd and Murphy (2008, p. 26) cautioned that thinning treatments would need to be implemented carefully to minimize short-term disturbance

impacts to the butterfly and its habitat. Individual butterflies (larvae, pupae, and adults), and larval host plants and nectar plants, may be crushed during project implementation. In areas where thinned trees are chipped (mastication), layers of wood chips may become too deep and impact survival of butterfly larvae and pupae, as well as larval host plants and nectar plants. Soil and vegetation disturbance during project implementation also could result in increases in weeds and disturbance-adapted species, such as *Chrysothamnus* spp. (rabbitbrush), and these plants could compete with Mt. Charleston blue larval host and nectar plants.

Conservation Agreements and Plans

A conservation agreement was developed in 1998 to facilitate voluntary cooperation among the USFS, the Service, and the State of Nevada Department of Conservation and Natural Resources in providing long-term protection for the rare and sensitive flora and fauna of the Spring Mountains, including the Mt. Charleston blue (Forest Service 1998, pp. 1–50). Many of the conservation actions described in the conservation agreement have been implemented; however, several important conservation actions that would have directly benefited the Mt. Charleston blue have not been implemented. Regardless, many of the conservation actions in the conservation agreement (*e.g.,* inventory and monitoring) would not directly reduce threats to the Mt. Charleston blue. In 2004, the Service and USFS signed a memorandum of agreement that provides a process for review of activities that involve species covered under the 1998 Conservation Agreement (Forest Service and Service 2004, pp. 1–9). Formal coordination through this memorandum of agreement was established to (1) Jointly develop projects that avoid or minimize impacts to listed, candidate and proposed species, and species under the 1998 conservation agreement; and (2) to ensure consistency with commitments and direction provided for in recovery planning efforts and in conservation agreement efforts. More than half of the past projects that impacted Mt. Charleston blue habitat were reviewed by the Service and USFS under this review process, but several were not. Some efforts under this memorandum of agreement have been successful in reducing or avoiding project impacts to the butterfly, while other efforts have not.

The loss or modification of known occupied and presumed occupied butterfly habitat in Upper Lee Canyon, as discussed above, has occurred in the past. However, more recently the USFS has suspended decision on certain projects that would potentially impact Mt. Charleston blue habitat (*see* discussion of lower parking lot expansion and new snowmaking lines projects under Recreation Development Projects, above). In addition, the USFS has recently reaffirmed its commitment to collaborate with the Service in order to avoid implementation of projects or actions that would impact the viability of (Forest Service 2010c). This commitment includes: (1) Developing a mutually agreeable process to review future proposed projects to ensure that implementation of these actions will not lead to loss of viability of the species; (2) reviewing proposed projects that may pose a threat to the continued viability of the species; and (3) jointly developing a conservation agreement (strategy) that identifies actions that will be taken to ensure the conservation of the species (Forest Service 2010c).

The Mt. Charleston blue butterfly is a covered species in the 2000 Clark County Multiple Species Habitat Conservation Plan (MSHCP). The Clark County MSHCP identifies two goals for the Mt. Charleston blue: (a) "Maintain stable or increasing population numbers and host and larval plant species"; and (b) "No net unmitigated loss of larval host plant or nectar plant species habitat" (RECON 2000a, Table 2.5, pp. 2–154; RECON 2000b, pp. B158–B161). The USFS is one of several signatories to the Implementing Agreement for the Clark County MSHCP, because many of the activities from the 1998 Conservation Agreement were incorporated into the MSHCP. Primarily, activities undertaken by USFS focused on conducting surveying and monitoring for butterflies. Although some surveying and monitoring occurred through contracts by the USFS, Clark County and the Service, a butterfly monitoring plan was not fully implemented.

Recently, the USFS has been implementing the LVSSR Adaptive Vegetation Management Plan (Forest Service 2005b, pp. 1–24) to provide mitigation for approximately 11 ac (4.45 ha) of impacts to presumed occupied butterfly habitat (and other sensitive wildlife and plant species habitat) resulting from projects it implemented in 2005 and 2006. Under the plan, LVSSR will revegetate impacted areas using native plant species, including Torrey's milkvetch. However, this program is experimental and has experienced difficulties due to the challenges of native seed availability and propagation. Under the plan, Torrey's milkvetch is being brought into horticultural propagation, and, if successful, plants will begin to be planted in 2011–2013. However, these efforts are not likely to provide replacement habitat to the Mt. Charleston blue for another 5 years (2016–2018), because of the short alpine growing season.

Summary of Factor A

The Mt. Charleston blue is currently known to occur in two locations: The South Loop Trail area in upper Kyle Canyon and LVSSR in upper Lee Canyon. Habitat loss and modification as a result of fire suppression and long-term successional changes in forest structure, implementation of recreational development projects and fuels reduction projects, and nonnative species are continuing threats to the butterfly in Upper Lee Canyon. Since 2000, seven projects have negatively impacted presumed occupied habitat for the Mt. Charleston blue. Approved and future projects could negatively impact additional presumed occupied occurrences of the Mt. Charleston blue in Lee Canyon (identified in Table 1). In addition, if proposed future activities under a draft Master Development Plan are approved, they could threaten the butterfly, as well as its known occupied and presumed occupied habitat at LVSSR.

Because of its small population size, projects that impact even relatively small areas of occupied habitat could threaten the long-term population viability of Mt. Charleston blue. The continued loss or modification of presumed occupied habitat could further impair the long-term population viability of the Mt. Charleston blue in upper Lee Canyon by removing diapausing larvae (if present) and by reducing the ability of the butterfly to disperse during favorable years. The successional advance of trees, shrubs, and grasses and the spread of nonnative species are continuing threats to the butterfly in upper Lee Canyon. The butterfly is presumed extirpated from at least three of the six historical locations, likely due to successional changes and the introduction of nonnative plants. Nonnative forbs and grasses are a threat to the subspecies at LVSSR.

Although there are agreements and plans that are intended to conserve the Mt. Charleston blue and its habitat, to date, some actions under these agreements and plans have not been fully implemented. Future actions could be implemented in accordance with the terms of various agreements and plans; however, this would be voluntary, and

other factors may preclude the USFS from doing so. Therefore, based on the current distribution and recent, existing, and likely future trends in habitat loss, we find the Mt. Charleston blue is threatened by the present and future destruction, modification, and curtailment of its habitat and range.

Factor B: Overutilization for Commercial, Recreational, Scientific, or Educational Purposes

Rare butterflies can be highly prized by insect collectors, and collection is a known threat to some butterfly species, such as the Fender's blue butterfly (65 FR 3882; January 25, 2000). In particular, small colonies and populations are at the highest risk. Overcollection or repeated handling and marking of females in years of low abundance can seriously damage populations through loss of reproductive individuals and genetic variability (65 FR 3882; January 25, 2000). Given its diminutive size and similarity to closely related subspecies, the Mt. Charleston blue is not likely to be of considerable aesthetic interest to collectors or the general public.

We are not aware of any information that indicates the butterflies are being sought by collectors or collected for other purposes. Therefore, we do not find that overutilization for commercial, recreational, scientific, or educational purposes threatens the Mt. Charleston blue.

Factor C: Disease or Predation

We are not aware of any information regarding any impacts from either disease or predation on the Mt. Charleston blue. Therefore, we do not find that disease or predation threatens the Mt. Charleston blue.

Factor D: The Inadequacy of Existing Regulatory Mechanisms

Existing regulatory mechanisms or other agreements that could provide some protection for the Mt. Charleston blue include: (1) Local land use laws, processes, and ordinances; (2) State laws and regulations; and (3) Federal laws and regulations. Actions adopted by local groups, States, or Federal entities that are discretionary, including conservation strategies and guidance, are not regulatory mechanisms; however, we will discuss and evaluate them below. The Mt. Charleston blue primarily occurs on Federal land under the jurisdiction of the USFS; therefore, the discussion below primarily focuses on Federal laws.

Local Laws and Ordinances

We are not aware of any local land use laws or ordinances that have been issued by Clark County or other local government entities for protection of the Mt. Charleston blue.

State Law

Nevada Revised Statutes sections 503 and 527 offer protective measures to wildlife and plants, but do not include invertebrate species such as the Mt. Charleston blue. Therefore, no regulatory protection is offered under Nevada State law.

Federal Law

Mt. Charleston blues have been detected in only two general areas in recent years—the South Loop Trail area where adult butterflies were recently detected during the summer of 2010 and LVSSR. The South Loop Trail area is located along the ridgeline between Griffith Peak and Charleston Peak within the Mt. Charleston Wilderness. The U.S. Forest Service manages lands designated as wilderness under the Wilderness Act of 1964 (16 U.S.C. 1131–1136). Within these areas, the Wilderness Act states the following: (1) New or temporary roads cannot be built; (2) there can be no use of motor vehicles, motorized equipment, or motorboats; (3) there can be no landing of aircraft; (4) there can be no other form of mechanical transport; and (5) no structure or installation may be built. As such, Mt. Charleston blue habitat in the South Loop Trail area is protected from direct loss or degradation by the prohibitions of the Wilderness Act. Mt. Charleston blue habitat at LVSSR and elsewhere in Lee Canyon and Kyle Canyon is located outside of the Mt. Charleston Wilderness, and thus is not subject to protections afforded by the Wilderness Act.

The National Environmental Policy Act (NEPA) of 1969, as amended (42 U.S.C. 4321 *et seq.*), requires Federal agencies, such as the USFS, to describe proposed agency actions, consider alternatives, identify and disclose potential environmental impacts of each alternative, and involve the public in the decision making process. Federal agencies are not required to select the NEPA alternative having the least significant environmental impacts. A Federal agency may select an action that will adversely affect sensitive species provided that these effects are identified in a NEPA document. The NEPA itself is a disclosure law, and does not require subsequent minimization or mitigation of actions taken by Federal agencies. Although Federal agencies may include conservation measures for the Mt. Charleston blue as a result of the NEPA process, such measures are not required by the statute. The USFS is required to analyze its projects, listed under Factor A, above, in accordance with the NEPA.

The Spring Mountains National Recreation Area is one of 10 districts of the Humboldt-Toiyabe National Forest. Public Law 103–63, dated August 4, 1993 (the Spring Mountains National Recreation Area Act, 16 U.S.C. 460hhh *et seq.*), established the Spring Mountains National Recreation Area to include approximately 316,000 ac (128,000 ha) of Federal lands managed by the USFS in Clark and Nye counties, Nevada, for the following purposes:

(1) To preserve the scenic, scientific, historic, cultural, natural, wilderness, watershed, riparian, wildlife, threatened and endangered species, and other values contributing to public enjoyment and biological diversity in the Spring Mountains of Nevada;

(2) To ensure appropriate conservation and management of natural and recreation resources in the Spring Mountains; and

(3) To provide for the development of public recreation opportunities in the Spring Mountains for the enjoyment of present and future generations.

The National Forest Management Act (NFMA) of 1976, as amended (16 U.S.C. 1600 *et seq.*), provides the principal guidance for the management of activities on lands under USFS jurisdiction, through associated land and resource management plans for each forest unit. Under NFMA and other Federal laws, the USFS has authority to regulate recreation, vehicle travel and other human disturbance, livestock grazing, fire management, energy development, and mining on lands within its jurisdiction. Current guidance for the management of USFS lands in the Spring Mountains National Recreation Area is under the Toiyabe National Forest Land and Resource Management Plan and the Spring Mountains National Recreation Area General Management Plan. In June 2006, the USFS added the Mt. Charleston blue, and three other endemic butterflies, to the Regional Forester's Sensitive Species List in accordance with Forest Service Manual 2670. The objectives of the USFS to manage sensitive species are to prevent listing of species under the Act, maintain viable populations of native species, and develop and implement management objectives for populations and habitat of sensitive species. All of the projects listed in Factor A, above, have been guided by these USFS plans, policies, and guidance. These plans, policies, and

guidance notwithstanding, removal or degradation of known occupied and presumed occupied butterfly habitat has occurred as a result of projects approved by the USFS in upper Lee Canyon. Additionally, this guidance has not been effective in reducing other threats to the Mt. Charleston blue (*e.g.,* nonnative plant species).

Summary of Factor D

Existing regulatory mechanisms are not sufficient to provide for conservation of the Mt. Charleston blue. Nevada Revised Statutes sections 503 and 527 do offer protective measures to wildlife and plants, but do not specifically include protections for invertebrate species, such as the Mt. Charleston blue. Since applicable State regulatory mechanisms that could potentially protect the Mt. Charleston blue are not inclusive of invertebrates, they are not effective in relieving the threats faced by the Mt. Charleston blue butterfly. Although Mt. Charleston blue habitat at the South Loop Trail area is protected by prohibitions of the Wilderness Act from many types of habitat-disturbing actions, habitat where Mt. Charleston blues have occurred in the past within Lee Canyon and Kyle Canyon are outside of designated wilderness and thus not protected by prohibitions of the Wilderness Act. Because of the Mt. Charleston blue's extremely small population size and limited distribution, it is potentially vulnerable to projects or actions that impact even relatively small areas of occupied or suitable habitat. Because existing law, regulation, and policy have not prevented implementation of projects or actions that have resulted in loss or degradation of butterfly habitat (*see* Factor A), we conclude that existing regulatory mechanisms are inadequate to protect the Mt. Charleston blue from threats discussed in this finding.

Factor E: Other Natural or Manmade Factors Affecting the Continued Existence of the Species

The Mt. Charleston blue population appears to have declined since the last high-population year in 1995. This subspecies has a limited distribution, and population numbers are small. Small butterfly populations have a higher risk of extinction due to random environmental events (Shaffer 1981, p. 131; Shaffer 1987, pp. 69–75; Gilpin and Soule 1986, pp. 24–28). Weather extremes can cause severe butterfly population reductions or extinctions (Murphy *et al.* 1990, p. 43; Weiss *et al.* 1987, pp. 164–167; Thomas *et al.* 1996, pp. 964–969). Given the limited distribution and likely low population numbers of the Mt. Charleston blue, late-season snowstorms, severe summer monsoon thunderstorms, and drought have the potential to adversely impact the subspecies.

Late-season snowstorms have caused alpine butterfly extirpations (Ehrlich *et al.* 1972, pp. 101–105), and false spring conditions followed by normal winter snowstorms have caused adult and pre-diapause larvae mortality (Parmesan 2005, pp. 56–60). In addition, high rainfall years have been associated with butterfly population declines (Dobkin *et al.* 1987, pp. 161–176). Extended periods of rainy weather can also slow larval development and reduce overwintering survival (Weiss *et al.* 1993, pp. 261–270). Weiss *et al.* (1997, p. 32) suggested that heavy summer monsoon thunderstorms adversely impacted Mt. Charleston blue butterflies during the 1996 flight season. During the 2006 and 2007 flight season, severe summer thunderstorms may have affected the flight season at LVSSR and the South Loop Trail (Newfields 2006, pp. 11 and 14; Kingsley 2007, p. 8). Additionally, drought has been shown to lower butterfly populations (Ehrlich *et al.* 1980, pp. 101–105; Thomas 1984, p. 344). Drought can cause butterfly host plants to mature early and reduce larval food availability (Ehrlich *et al.* 1980, pp. 101–105; Weiss 1987, p. 165). This has likely affected the Mt. Charleston blue. Murphy (2006, p. 3) and Boyd (2006, p. 1) both assert a series of drought years, followed by a season of above-average snowfall and then more drought, could be a reason for the lack of butterfly sightings in 2006. Continuing drought could be responsible for the lack of sightings in 2007 and 2008 (Datasmiths 2007, p. 1; Boyd 2008, p. 2).

High-elevation species like the Mt. Charleston blue may be particularly susceptible to some level of habitat loss due to global climate change exacerbating threats already facing the subspecies (Peters and Darling 1985, p. 714; Hill *et al.* 2002, p. 2170). The Intergovernmental Panel on Climate Change (IPCC) has high confidence in predictions that extreme weather events, warmer temperatures, and regional drought are very likely to increase in the northern hemisphere as a result of climate change (IPCC 2007, pp. 15–16). Climate models show the southwestern United States has transitioned into a more arid climate of drought that is predicted to continue into the next century (Seager *et al.* 2007, p. 1181). In the past 60 years, the frequency of storms with extreme precipitation has increased in Nevada by 29 percent (Madsen and Figdor 2007, p. 37). Changes in local southern Nevada climatic patterns cannot be definitively tied to global climate change; however, they are consistent with IPCC-predicted patterns of extreme precipitation, warmer than average temperatures, and drought (Redmond 2007, p. 1). Therefore, we think it likely that climate change will impact the Mt. Charleston blue and its high-elevation habitat through predicted increases in extreme precipitation and drought. Alternating extreme precipitation and drought may exacerbate threats already facing the subspecies as a result of its small population size and threats to its habitat.

Summary of Factor E

Small butterfly populations have a higher risk of extinction due to random environmental events (Shaffer 1981, p. 131; Gilpin and Soule 1986, pp. 24–28; Shaffer 1987, pp. 69–75). Because of its small population and restricted range, the Mt. Charleston blue is vulnerable to random environmental events; in particular, the butterfly is threatened by extreme precipitation events and drought. In the past 60 years, the frequency of storms with extreme precipitation has increased in Nevada by 29 percent (Madsen and Figdor 2007, p. 37), and it is predicted that altered regional patterns of temperature and precipitation as a result of global climate change will continue (IPCC 2007, pp. 15–16). Throughout the entire range of the Mt. Charleston blue, altered climate patterns could increase the potential for extreme precipitation events and drought, and may exacerbate the threats the subspecies already faces given its small population size and the threats to the alpine environment where it occurs. Based on this information, we find that other natural or manmade factors are affecting the Mt. Charleston blue such that these factors threaten the subspecies' continued existence.

Summary of Threats Analysis

The Mt. Charleston blue butterfly is sensitive to environmental variability with the butterfly population rising and falling in response to environmental conditions (*see* "Status and Trends" section). The best available information suggests the Mt. Charleston blue population appears to have been in decline since 1995, the last year the subspecies was observed in high numbers, and that the population is now extremely small (*see* "Status and Trends" section). To some extent the Mt. Charleston blue, like most butterflies, has evolved to survive unfavorable environmental conditions as diapausing larvae or pupae (Scott 1986, pp. 26–30). The pupae of some butterfly species are

known to persist in diapause up to 5 to 7 years (Scott 1986, p. 28). The number of years the Mt. Charleston blue can remain in diapause is unknown. Local experts have speculated that the Mt. Charleston blue may only be able to diapause for one season. However, in response to unfavorable environmental conditions, it is hypothesized that a prolonged diapause period may be possible (Murphy 2006, p. 1; Datasmiths 2007, p. 6; Boyd and Murphy 2008, p. 22). The best available information suggests environmental conditions from 2006 to 2009 have not been favorable to the butterfly (*see* "Status and Trends" section).

Surveys are planned for 2011 to further determine the status and provide more knowledge about the ecology of the Mt. Charleston blue. Threats facing the Mt. Charleston blue, discussed above under listing Factors A, D, and E, will only increase risks to persistence of the butterfly, given its low population size. The loss and degradation of habitat due to fire suppression and succession; implementation of recreation development projects and fuels reduction projects; and increases in nonnative plants (*see* Factor A), along with the lack of adequate regulatory mechanisms to prevent these impacts (*see* Factor D), will increase the inherent risk of extinction of the remaining small population of Mt. Charleston blue. These threats are likely to be exacerbated by the impact of climate change, which is anticipated to increase drought and extreme precipitation events (*see* Factor E).

Finding

As required by the Act, we considered the five factors in assessing whether the Mt. Charleston blue butterfly is endangered or threatened throughout all or a significant portion of its range. We have carefully examined the best scientific and commercial information available regarding the past, present, and future threats faced by the Mt. Charleston blue. We reviewed the petition, information available in our files, other available published and unpublished information, information obtained from consultations with recognized Mt. Charleston blue butterfly experts, and information submitted to us by the public following publication of our notice of 90-day petition finding and initiation of status review (72 FR 29933; May 30, 2007). On the basis of the best scientific and commercial information available, we find that the listing of the Mt. Charleston blue butterfly is warranted, due to the threats associated with habitat destruction or modification (Factor A), the inadequacy of existing regulatory mechanisms (Factor D), and other natural and manmade factors (Factor E). We will make a determination on the status of the species as endangered or threatened when we prepare a proposed listing rule. However, as explained in more detail below, an immediate proposal of a regulation implementing this action is precluded by higher priority listing actions, and progress is being made to add or remove qualified species from the Lists of Endangered and Threatened Wildlife and Plants.

In making this finding, we recognize that there have been declines in the distribution and abundance of the Mt. Charleston blue as a result of natural and human-caused factors. Butterflies that occur in upper Lee Canyon are threatened by fire suppression and succession, implementation of recreation development projects and fuels reduction projects, and increases in nonnative plant species. These threats, if left unchecked, could continue to impair the long-term population viability of the Mt. Charleston blue (Factor A). In addition, the existing voluntary agreements and plans (Factor A), and regulatory mechanisms (Factor D) are inadequate to sufficiently reduce the threats to the subspecies from habitat loss and degradation and nonnative species to a level that does not pose a significant threat to the subspecies. The amount of known habitat persistently occupied at the South Loop Trail and LVSSR is small (less than 23 ac (9 ha)). The threats to the viability of the Mt. Charleston blue because of its limited distribution, extremely low population numbers, and degradation of its habitat will be exacerbated by threats from extreme precipitation events and drought that are predicted to become more frequent under global climate change (Factor E). Due to the threats described above, we find that the Mt. Charleston blue butterfly is warranted for listing throughout its range; however, the promulgation of a listing rule at this time is precluded by higher priority listing actions. We will review whether to list the Mt. Charleston blue butterfly as endangered or threatened when we begin the process to propose listing of this subspecies, as our priorities allow. We will make any determination on critical habitat during development of the proposed listing rule.

We have reviewed the available information to determine if the existing and foreseeable threats render the species at risk of extinction now such that issuing an emergency regulation temporarily listing the species under section 4(b)(7) of the Act is appropriate. During this status review, we considered whether emergency listing of the subspecies was necessary, given the vulnerability of the Mt. Charleston blue to extinction due to its small population size and limited distribution. We have determined that, at this time, issuing an emergency regulation temporarily putting the protections of the Act in place for the subspecies is not appropriate for the following reasons. Nearly the entire range of the Mt. Charleston blue is located on public lands managed by the Humboldt-Toiyabe National Forest, so habitats on these lands are not subject to large-scale development pressures that may occur on private lands. The area where the most persistent population of Mt. Charleston blue currently occurs is the South Loop Trail area, which is located within the Mt. Charleston Wilderness, and thus receives protection afforded by the the Wilderness Act (*see* Factor D discussion). In addition, decisions on proposed projects that would have impacted Mt. Charleston blue habitat at the LVSSR have been suspended or modified recently (*see* Recreation Development Projects under Factor A), and the USFS has recently reaffirmed its commitment to ensure that implementation of projects and actions on Forest Service lands will not cause a loss of viability of the Mt. Charleston blue (*see* Conservation Agreements and Plans under Factor A). However, if the current situation changes and we become aware of projects or actions that pose an immediate threat to the continued existence of the Mt. Charleston blue, we may act immediately to provide the butterfly emergency protections under the Act.

Listing Priority Number

The Service adopted guidelines on September 21, 1983 (48 FR 43098) to establish a rational system for utilizing available resources for the highest priority species when adding species to the Lists of Endangered or Threatened Wildlife and Plants or reclassifying species listed as threatened to endangered status. These guidelines, titled "Endangered and Threatened Species Listing and Recovery Priority Guidelines" (LPN Guidance) address the immediacy and magnitude of threats, and the level of taxonomic distinctiveness by assigning priority in descending order to monotypic genera (genus with one species), full species, and subspecies (or equivalently, distinct population segments of vertebrates). We assigned the Mt. Charleston blue butterfly a Listing Priority Number (LPN) of 3 based on our finding that the

species faces threats that are of high magnitude and are imminent. Because the Mt. Charleston blue butterfly is a subspecies, the highest Listing Priority Number (LPN) we can assign it is an LPN of 3, which is the highest priority that can be provided to a subspecies under our LPN Guidance. Our rationale for assigning the Mt. Charleston blue butterfly an LPN of 3 is outlined below.

Under the Service's LPN Guidance, the magnitude of threat is the first criterion we look at when establishing a listing priority. The guidance indicates that species with the highest magnitude of threat are those species facing the greatest threats to their continued existence. These species receive the highest listing priority. Mt. Charleston blue is highly vulnerable to threats because of its extremely small population size and limited distribution. The magnitude of threats to the Mt. Charleston blue is high due to a combination of existing threats. These threats include habitat loss and degradation due to fire suppression and succession, implementation of fuels reduction projects and habitat-disturbing projects or actions, and spread of nonnative plants (Factor A). In addition, because of its extremely limited range, drought and extreme precipitation events, which are predicted to become more frequent under climate change, potentially impact Mt. Charleston blue across its entire range (Factor E). These threats act synergistically and constitute a significant risk to the continued existence of the Mt. Charleston blue. Given the decline in the population of the Mt. Charleston blue butterfly over the last 15 years, active and sustained conservation of the butterfly and its habitat is required.

Under our LPN Guidance, the second criterion we consider in assigning a listing priority is the immediacy of threats. This criterion is intended to ensure that the species that face actual, identifiable threats are given priority over those for which threats are only potential or species that are intrinsically vulnerable but are not known to be presently facing such threats. The threats described above in this finding are imminent because they are ongoing. The combination of ongoing threats place the continued existence of the Mt. Charleston blue at risk because of its high vulnerability due to extremely small population size and limited distribution.

The third criterion in our LPN guidance is intended to ensure resources are devoted to those species representing highly distinctive or isolated gene pools as reflected by taxonomy. The Mt. Charleston blue butterfly is a valid taxon at the subspecies level, and therefore receives a lower priority than a full species or a species in a monotypic genus. The Mt. Charleston blue butterfly faces high-magnitude, imminent threats, and is a valid taxon at the subspecies level. Thus, in accordance with our LPN guidance, we have assigned the Mt. Charleston blue butterfly an LPN of 3.

We will continue to monitor the threats to the Mt. Charleston blue butterfly, and the subspecies' status on an annual basis, and should the magnitude or the imminence of the threats change, we will revisit our assessment of the LPN.

Work on a proposed listing determination for the Mt. Charleston blue butterfly is precluded by work on higher priority listing actions with absolute statutory, court-ordered, or court-approved deadlines and final listing determinations for those species that were proposed for listing with funds from Fiscal Year 2011. This work includes all the actions listed in the tables below under expeditious progress.

Preclusion and Expeditious Progress

Preclusion is a function of the listing priority of a species in relation to the resources that are available and the cost and relative priority of competing demands for those resources. Thus, in any given fiscal year (FY), multiple factors dictate whether it will be possible to undertake work on a listing proposal regulation or whether promulgation of such a proposal is precluded by higher-priority listing actions.

The resources available for listing actions are determined through the annual Congressional appropriations process. The appropriation for the Listing Program is available to support work involving the following listing actions: Proposed and final listing rules; 90-day and 12-month findings on petitions to add species to the Lists of Endangered and Threatened Wildlife and Plants (Lists) or to change the status of a species from threatened to endangered; annual "resubmitted" petition findings on prior warranted-but-precluded petition findings as required under section 4(b)(3)(C)(i) of the Act; critical habitat petition findings; proposed and final rules designating critical habitat; and litigation-related, administrative, and program-management functions (including preparing and allocating budgets, responding to Congressional and public inquiries, and conducting public outreach regarding listing and critical habitat). The work involved in preparing various listing documents can be extensive and may include, but is not limited to: Gathering and assessing the best scientific and commercial data available and conducting analyses used as the basis for our decisions; writing and publishing documents; and obtaining, reviewing, and evaluating public comments and peer review comments on proposed rules and incorporating relevant information into final rules. The number of listing actions that we can undertake in a given year also is influenced by the complexity of those listing actions; that is, more complex actions generally are more costly. The median cost for preparing and publishing a 90-day finding is $39,276; for a 12-month finding, $100,690; for a proposed rule with critical habitat, $345,000; and for a final listing rule with critical habitat, the median cost is $305,000.

We cannot spend more than is appropriated for the Listing Program without violating the Anti-Deficiency Act (*see* 31 U.S.C. 1341(a)(1)(A)). In addition, in FY 1998 and for each fiscal year since then, Congress has placed a statutory cap on funds which may be expended for the Listing Program, equal to the amount expressly appropriated for that purpose in that fiscal year. This cap was designed to prevent funds appropriated for other functions under the Act (for example, recovery funds for removing species from the Lists), or for other Service programs, from being used for Listing Program actions (*see* House Report 105–163, 105th Congress, 1st Session, July 1, 1997).

Since FY 2002, the Service's budget has included a critical habitat subcap to ensure that some funds are available for other work in the Listing Program ("The critical habitat designation subcap will ensure that some funding is available to address other listing activities" (House Report No. 107–103, 107th Congress, 1st Session, June 19, 2001)). In FY 2002 and each year until FY 2006, the Service has had to use virtually the entire critical habitat subcap to address court-mandated designations of critical habitat, and consequently none of the critical habitat subcap funds have been available for other listing activities. In some FYs since 2006, we have been able to use some of the critical habitat subcap funds to fund proposed listing determinations for high-priority candidate species. In other FYs, while we were unable to use any of the critical habitat subcap funds to fund proposed listing determinations, we did use some of this money to fund the critical habitat portion of some proposed listing determinations so that the proposed

listing determination and proposed critical habitat designation could be combined into one rule, thereby being more efficient in our work. At this time, for FY 2011, we do not know if we will be able to use some of the critical habitat subcap funds to fund proposed listing determinations.

We make our determinations of preclusion on a nationwide basis to ensure that the species most in need of listing will be addressed first and also because we allocate our listing budget on a nationwide basis. Through the listing cap, the critical habitat subcap, and the amount of funds needed to address court-mandated critical habitat designations, Congress and the courts have in effect determined the amount of money available for other listing activities nationwide. Therefore, the funds in the listing cap, other than those needed to address court-mandated critical habitat for already listed species, set the limits on our determinations of preclusion and expeditious progress.

Congress identified the availability of resources as the only basis for deferring the initiation of a rulemaking that is warranted. The Conference Report accompanying Public Law 97–304 (Endangered Species Act Amendments of 1982), which established the current statutory deadlines and the warranted-but-precluded finding, states that the amendments were "not intended to allow the Secretary to delay commencing the rulemaking process for any reason other than that the existence of pending or imminent proposals to list species subject to a greater degree of threat would make allocation of resources to such a petition [that is, for a lower-ranking species] unwise." Although that statement appeared to refer specifically to the "to the maximum extent practicable" limitation on the 90-day deadline for making a "substantial information" finding, that finding is made at the point when the Service is deciding whether or not to commence a status review that will determine the degree of threats facing the species, and therefore the analysis underlying the statement is more relevant to the use of the warranted-but-precluded finding, which is made when the Service has already determined the degree of threats facing the species and is deciding whether or not to commence a rulemaking.

In FY 2011, on December 22, 2010, Congress passed a continuing resolution which provides funding at the FY 2010 enacted level through March 4, 2011. Until Congress appropriates funds for FY 2011 at a different level, we will fund listing work based on the FY 2010 amount. Thus, at this time in FY 2011, the Service anticipates an appropriation of $22,103,000 based on FY 2010 appropriations. Of that, the Service anticipates needing to dedicate $11,632,000 for determinations of critical habitat for already listed species. Also $500,000 is appropriated for foreign species listings under the Act. The Service thus has $9,971,000 available to fund work in the following categories: Compliance with court orders and court-approved settlement agreements requiring that petition findings or listing determinations be completed by a specific date; section 4 (of the Act) listing actions with absolute statutory deadlines; essential litigation-related, administrative, and listing program-management functions; and high-priority listing actions for some of our candidate species. In FY 2010 the Service received many new petitions and a single petition to list 404 species. The receipt of petitions for a large number of species is consuming the Service's listing funding that is not dedicated to meeting court-ordered commitments. Absent some ability to balance effort among listing duties under existing funding levels, it is unlikely that the Service will be able to initiate any new listing determination for candidate species in FY 2011.

In 2009, the responsibility for listing foreign species under the Act was transferred from the Division of Scientific Authority, International Affairs Program, to the Endangered Species Program. Therefore, starting in FY 2010, we used a portion of our funding to work on the actions described above for listing actions related to foreign species. In FY 2011, we anticipate using $1,500,000 for work on listing actions for foreign species which reduces funding available for domestic listing actions, however, currently only $500,000 has been allocated. Although there are currently no foreign species issues included in our high-priority listing actions at this time, many actions have statutory or court-approved settlement deadlines, thus increasing their priority. The budget allocations for each specific listing action are identified in the Service's FY 2011 Allocation Table (part of our record).

For the above reasons, funding a proposed listing determination for the Mt. Charleston blue is precluded by court-ordered and court-approved settlement agreements, listing actions with absolute statutory deadlines, and work on proposed listing determinations for those candidate species with a higher listing priority (*i.e.,* candidate species with LPNs of 1–2.

Based on our September 21, 1983, guidance for assigning an LPN for each candidate species (48 FR 43098), we have a significant number of species with an LPN of 2. Using this guidance, we assign each candidate an LPN of 1 to 12, depending on the magnitude of threats (high or moderate to low), immediacy of threats (imminent or nonimminent), and taxonomic status of the species (in order of priority: Monotypic genus (a species that is the sole member of a genus); species; or part of a species (subspecies, distinct population segment, or significant portion of the range)). The lower the listing priority number, the higher the listing priority (that is, a species with an LPN of 1 would have the highest listing priority).

Because of the large number of high-priority species, we have further ranked the candidate species with an LPN of 2 by using the following extinction-risk type criteria: International Union for the Conservation of Nature and Natural Resources (IUCN) Red list status/rank, Heritage rank (provided by NatureServe), Heritage threat rank (provided by NatureServe), and species currently with fewer than 50 individuals, or 4 or fewer populations. Those species with the highest IUCN rank (critically endangered), the highest Heritage rank (G1), the highest Heritage threat rank (substantial, imminent threats), and currently with fewer than 50 individuals, or fewer than 4 populations, originally comprised a group of approximately 40 candidate species ("Top 40"). These 40 candidate species have had the highest priority to receive funding to work on a proposed listing determination. As we work on proposed and final listing rules for those 40 candidates, we apply the ranking criteria to the next group of candidates with an LPN of 2 and 3 to determine the next set of highest priority candidate species. Finally, proposed rules for reclassification of threatened species to endangered are lower priority, since as listed species, they are already afforded the protection of the Act and implementing regulations. However, for efficiency reasons, we may choose to work on a proposed rule to reclassify a species to endangered if we can combine this with work that is subject to a court-determined deadline.

With our workload so much bigger than the amount of funds we have to accomplish it, it is important that we be as efficient as possible in our listing process. Therefore, as we work on proposed rules for the highest priority species in the next several years, we are preparing multi-species proposals when appropriate, and these may include

species with lower priority if they overlap geographically or have the same threats as a species with an LPN of 2. In addition, we take into consideration the availability of staff resources when we determine which high-priority species will receive funding to minimize the amount of time and resources required to complete each listing action.

As explained above, a determination that listing is warranted but precluded must also demonstrate that expeditious progress is being made to add and remove qualified species to and from the Lists of Endangered and Threatened Wildlife and Plants. As with our "precluded" finding, the evaluation of whether progress in adding qualified species to the Lists has been expeditious is a function of the resources available for listing and the competing demands for those funds. (Although we do not discuss it in detail here, we are also making expeditious progress in removing species from the list under the Recovery program in light of the resource available for delisting, which is funded by a separate line item in the budget of the Endangered Species Program. So far during FY 2011, we have completed one delisting rule.) Given the limited resources available for listing, we find that we are making expeditious progress in FY 2011 in the Listing. This progress included preparing and publishing the following determinations:

FY 2011 COMPLETED LISTING ACTIONS

Publication date	Title	Actions	FR pages
10/6/2010	Endangered Status for the Altamaha Spinymussel and Designation of Critical Habitat.	Proposed Listing Endangered	75 FR 61664–61690
10/7/2010	12-Month Finding on a Petition to list the Sacramento Splittail as Endangered or Threatened.	Notice of 12-month petition finding, Not warranted.	75 FR 62070–62095
10/28/2010	Endangered Status and Designation of Critical Habitat for Spikedace and Loach Minnow.	Proposed Listing Endangered (uplisting)	75 FR 66481–66552
11/2/2010	90-Day Finding on a Petition to List the Bay Springs Salamander as Endangered.	Notice of 90-day Petition Finding, Not substantial.	75 FR 67341–67343
11/2/2010	Determination of Endangered Status for the Georgia Pigtoe Mussel, Interrupted Rocksnail, and Rough Hornsnail and Designation of Critical Habitat.	Final Listing Endangered	75 FR 67511–67550
11/2/2010	Listing the Rayed Bean and Snuffbox as Endangered.	Proposed Listing Endangered	75 FR 67551–67583
11/4/2010	12-Month Finding on a Petition to List Cirsium wrightii (Wright's Marsh Thistle) as Endangered or Threatened.	Notice of 12-month petition finding, Warranted but precluded.	75 FR 67925–67944
12/14/2010	Endangered Status for Dunes Sagebrush Lizard.	Proposed Listing Endangered	75 FR 77801–77817
12/14/2010	12-Month Finding on a Petition to List the North American Wolverine as Endangered or Threatened.	Notice of 12-month petition finding, Warranted but precluded.	75 FR 78029–78061
12/14/2010	12-Month Finding on a Petition to List the Sonoran Population of the Desert Tortoise as Endangered or Threatened.	Notice of 12-month petition finding, Warranted but precluded.	75 FR 78093–78146
12/15/2010	12-Month Finding on a Petition to List *Astragalus microcymbus* and *Astragalus schmolliae* as Endangered or Threatened.	Notice of 12-month petition finding, Warranted but precluded.	75 FR 78513–78556
12/28/2010	Listing Seven Brazilian Bird Species as Endangered Throughout Their Range.	Final Listing Endangered	75 FR 81793–81815
1/4/2011	90-Day Finding on a Petition to List the Red Knot subspecies *Calidris canutus roselaari* as Endangered.	Notice of 90-day Petition Finding, Not substantial.	76 FR 304–311
1/19/2011	Endangered Status for the Sheepnose and Spectaclecase Mussels.	Proposed Listing Endangered	76 FR 3392–3420
2/10/2011	12-Month Finding on a Petition to List the Pacific Walrus as Endangered or Threatened.	Notice of 12-month petition finding, Warranted but precluded.	76 FR 7634

Our expeditious progress also includes work on listing actions that we funded in FY 2010 and FY 2011 but have not yet been completed to date. These actions are listed below. Actions in the top section of the table are being conducted under a deadline set by a court. Actions in the middle section of the table are being conducted to meet statutory timelines, that is, timelines required under the Act. Actions in the bottom section of the table are high-priority listing actions. These actions include work primarily on species with an LPN of 2, and, as discussed above, selection of these species is partially based on available staff resources, and when appropriate, include species with a lower priority if they overlap geographically or have the same threats as the species with the high priority. Including these species together in the same proposed rule results in considerable savings in time and funding, as compared to preparing separate proposed rules for each of them in the future.

ACTIONS FUNDED IN FY 2010 AND FY 2011 BUT NOT YET COMPLETED

Species	Action
Actions Subject to Court Order/Settlement Agreement	
Flat-tailed horned lizard	Final listing determination.
Mountain plover [4]	Final listing determination.
Solanum conocarpum	12-month petition finding.
Thorne's Hairstreak butterfly [3]	12-month petition finding.
Hermes copper butterfly [3]	12-month petition finding.
4 parrot species (military macaw, yellow-billed parrot, red-crowned parrot, scarlet macaw) [5]	12-month petition finding.
4 parrot species (blue-headed macaw, great green macaw, grey-cheeked parakeet, hyacinth macaw) [5].	12-month petition finding.
4 parrots species (crimson shining parrot, white cockatoo, Philippine cockatoo, yellow-crested cockatoo) [5].	12-month petition finding.
Utah prairie dog (uplisting)	90-day petition finding.
Actions with Statutory Deadlines	
Casey's june beetle	Final listing determination.
Southern rockhopper penguin—Campbell Plateau population	Final listing determination.
6 Birds from Eurasia	Final listing determination.
5 Bird species from Colombia and Ecuador	Final listing determination.
Queen Charlotte goshawk	Final listing determination.
5 species southeast fish (Cumberland darter, rush darter, yellowcheek darter, chucky madtom, and laurel dace) [4].	Final listing determination.
Ozark hellbender [4]	Final listing determination.
Altamaha spinymussel [3]	Final listing determination.
3 Colorado plants (*Ipomopsis polyantha* (Pagosa Skyrocket), *Penstemon debilis* (Parachute Beardtongue), and *Phacelia submutica* (DeBeque Phacelia)) [4].	Final listing determination.
Salmon crested cockatoo	Final listing determination.
6 Birds from Peru and Bolivia	Final listing determination.
Loggerhead sea turtle (assist National Marine Fisheries Service) [5]	Final listing determination.
2 mussels (rayed bean (LPN = 2), snuffbox No LPN) [5]	Final listing determination.
Mt Charleston blue [5]	Proposed listing determination.
CA golden trout [4]	12-month petition finding.
Black-footed albatross	12-month petition finding.
Mount Charleston blue butterfly	12-month petition finding.
Mojave fringe-toed lizard [1]	12-month petition finding.
Kokanee—Lake Sammamish population [1]	12-month petition finding.
Cactus ferruginous pygmy-owl [1]	12-month petition finding.
Northern leopard frog	12-month petition finding.
Tehachapi slender salamander	12-month petition finding.
Coqui Llanero	12-month petition finding/Proposed listing.
Dusky tree vole	12-month petition finding.
3 MT invertebrates (mist forestfly (*Lednia tumana*), *Oreohelix* sp.3, *Oreohelix* sp. 31) from 206 species petition.	12-month petition finding.
5 UT plants (*Astragalus hamiltonii, Eriogonum soredium, Lepidium ostleri, Penstemon flowersii, Trifolium friscanum*) from 206 species petition.	12-month petition finding.
5 WY plants (*Abronia ammophila, Agrostis rossiae, Astragalus proimanthus, Boechere (Arabis) pusilla, Penstemon gibbensii*) from 206 species petition.	12-month petition finding.
Leatherside chub (from 206 species petition)	12-month petition finding.
Frigid ambersnail (from 206 species petition) [3]	12-month petition finding.
Platte River caddisfly (from 206 species petition) [5]	12-month petition finding.
Gopher tortoise—eastern population	12-month petition finding.
Grand Canyon scorpion (from 475 species petition)	12-month petition finding.
Anacroneuria wipukupa (a stonefly from 475 species petition) [4]	12-month petition finding.
Rattlesnake-master borer moth (from 475 species petition) [3]	12-month petition finding.
3 Texas moths (*Ursia furtiva, Sphingicampa blanchardi, Agapema galbina*) (from 475 species petition).	12-month petition finding.
2 Texas shiners (*Cyprinella* sp., *Cyprinella lepida*) (from 475 species petition)	12-month petition finding.
3 South Arizona plants (*Erigeron piscaticus, Astragalus hypoxylus, Amoreuxia gonzalezii*) (from 475 species petition).	12-month petition finding.
5 Central Texas mussel species (3 from 475 species petition)	12-month petition finding.
14 parrots (foreign species)	12-month petition finding.
Berry Cave salamander [1]	12-month petition finding.
Striped Newt [1]	12-month petition finding.
Fisher—Northern Rocky Mountain Range [1]	12-month petition finding.
Mohave Ground Squirrel [1]	12-month petition finding.
Puerto Rico Harlequin Butterfly [3]	12-month petition finding.
Western gull-billed tern	12-month petition finding.
Ozark chinquapin (*Castanea pumila* var. *ozarkensis*) [4]	12-month petition finding.
HI yellow-faced bees	12-month petition finding.
Giant Palouse earthworm	12-month petition finding.
Whitebark pine	12-month petition finding.

ACTIONS FUNDED IN FY 2010 AND FY 2011 BUT NOT YET COMPLETED—Continued

Species	Action
OK grass pink (*Calopogon oklahomensis*) [1]	12-month petition finding.
Ashy storm-petrel [5]	12-month petition finding.
Honduran emerald	12-month petition finding.
Southeastern pop snowy plover and wintering pop. of piping plover [1]	90-day petition finding.
Eagle Lake trout [1]	90-day petition finding.
Smooth-billed ani [1]	90-day petition finding.
32 Pacific Northwest mollusks species (snails and slugs) [1]	90-day petition finding.
42 snail species (Nevada and Utah)	90-day petition finding.
Peary caribou	90-day petition finding.
Plains bison	90-day petition finding.
Spring Mountains checkerspot butterfly	90-day petition finding.
Spring pygmy sunfish	90-day petition finding.
Bay skipper	90-day petition finding.
Unsilvered fritillary	90-day petition finding.
Texas kangaroo rat	90-day petition finding.
Spot-tailed earless lizard	90-day petition finding.
Eastern small-footed bat	90-day petition finding.
Northern long-eared bat	90-day petition finding.
Prairie chub	90-day petition finding.
10 species of Great Basin butterfly	90-day petition finding.
6 sand dune (scarab) beetles	90-day petition finding.
Golden-winged warbler [4]	90-day petition finding.
Sand-verbena moth	90-day petition finding.
404 Southeast species	90-day petition finding.
Franklin's bumble bee [4]	90-day petition finding.
2 Idaho snowflies (straight snowfly and Idaho snowfly) [4]	90-day petition finding.
American eel [4]	90-day petition finding.
Gila monster (Utah population) [4]	90-day petition finding.
Arapahoe snowfly [4]	90-day petition finding.
Leona's little blue [4]	90-day petition finding.
Aztec gilia [5]	90-day petition finding.
White-tailed ptarmigan [5]	90-day petition finding.
San Bernardino flying squirrel [5]	90-day petition finding.
Bicknell's thrush [5]	90-day petition finding.
Chimpanzee	90-day petition finding.
Sonoran talussnail [5]	90-day petition finding.
2 AZ Sky Island plants (*Graptopetalum bartrami and Pectis imberbis*) [5]	90-day petition finding.
I'iwi [5]	90-day petition finding.
High-Priority Listing Actions	
19 Oahu candidate species [2] (16 plants, 3 damselflies) (15 with LPN = 2, 3 with LPN = 3, 1 with LPN = 9).	Proposed listing.
19 Maui-Nui candidate species [2] (16 plants, 3 tree snails) (14 with LPN = 2, 2 with LPN = 3, 3 with LPN = 8).	Proposed listing.
2 Arizona springsnails [2] (*Pyrgulopsis bernadina* (LPN = 2), *Pyrgulopsis trivialis* (LPN = 2))	Proposed listing.
Chupadera springsnail [2] (*Pyrgulopsis chupaderae* (LPN = 2))	Proposed listing.
8 Gulf Coast mussels (southern kidneyshell (LPN = 2), round ebonyshell (LPN = 2), Alabama pearlshell (LPN = 2), southern sandshell (LPN = 5), fuzzy pigtoe (LPN = 5), Choctaw bean (LPN = 5), narrow pigtoe (LPN = 5), and tapered pigtoe (LPN = 11)) [4].	Proposed listing.
Umtanum buckwheat (LPN = 2) and white bluffs bladderpod (LPN = 9) [4]	Proposed listing.
Grotto sculpin (LPN = 2) [4]	Proposed listing.
2 Arkansas mussels (Neosho mucket (LPN = 2) and Rabbitsfoot (LPN = 9)) [4]	Proposed listing.
Diamond darter (LPN = 2) [4]	Proposed listing.
Gunnison sage-grouse (LPN = 2) [4]	Proposed listing.
Miami blue (LPN = 3) [3]	Proposed listing.
4 Texas salamanders (Austin blind salamander (LPN = 2), Salado salamander (LPN = 2), Georgetown salamander (LPN = 8), Jollyville Plateau (LPN = 8)) [3].	Proposed listing.
5 SW aquatics (Gonzales Spring Snail (LPN = 2), Diamond Y springsnail (LPN = 2), Phantom springsnail (LPN = 2), Phantom Cave snail (LPN = 2), Diminutive amphipod (LPN = 2)) [3].	Proposed listing.
2 Texas plants (Texas golden gladecress (*Leavenworthia texana*) (LPN = 2), Neches River rose-mallow (*Hibiscus dasycalyx*) (LPN = 2)) [3].	Proposed listing.
FL bonneted bat (LPN = 2) [3]	Proposed listing.
21 Big Island (HI) species [5] (includes 8 candidate species—5 plants and 3 animals; 4 with LPN = 2, 1 with LPN = 3, 1 with LPN = 4, 2 with LPN = 8).	Proposed listing.
12 Puget Sound prairie species (9 subspecies of pocket gopher (*Thomomys mazama* ssp.) (LPN = 3), streaked horned lark (LPN = 3), Taylor's checkerspot (LPN = 3), Mardon skipper (LPN = 8)) [3].	Proposed listing.
2 TN River mussels (fluted kidneyshell (LPN = 2), slabside pearlymussel (LPN = 2)) [5]	Proposed listing.
Jemez Mountain salamander (LPN = 2) [5]	Proposed listing.

[1] Funds for listing actions for these species were provided in previous FYs.

[2] Although funds for these high-priority listing actions were provided in FY 2008 or 2009, due to the complexity of these actions and competing priorities, these actions are still being developed.

[3] Partially funded with FY 2010 funds and FY 2011 funds.
[4] Funded with FY 2010 funds.
[5] Funded with FY 2011 funds.

We have endeavored to make our listing actions as efficient and timely as possible, given the requirements of the relevant law and regulations, and constraints relating to workload and personnel. We are continually considering ways to streamline processes or achieve economies of scale, such as by batching related actions together. Given our limited budget for implementing section 4 of the Act, these actions described above collectively constitute expeditious progress.

The Mt. Charleston blue butterfly will be added to the list of candidate species upon publication of this 12-month finding. We will continue to monitor the status of this species as new information becomes available. This review will determine if a change in status is warranted, including the need to make prompt use of emergency listing procedures.

We intend that any proposed listing action for the Mt. Charleston blue butterfly will be as accurate as possible. Therefore, we will continue to accept additional information and comments from all concerned governmental agencies, the scientific community, industry, or any other interested party concerning this finding.

References Cited

A complete list of all references cited is available on request from the Nevada Fish and Wildlife Office (*see* **ADDRESSES**).

Authors

The primary authors of this document are the staff members of the U.S. Fish and Wildlife Service, Nevada Fish and Wildlife Office (*see* **ADDRESSES**).

Authority

The authority for this action is section 4 of the Endangered Species Act of 1973, as amended (16 U.S.C. 1531 *et seq.*).

Dated: February 11, 2011.

Rowan W. Gould,

Acting Director, U.S. Fish and Wildlife Service.

[FR Doc. 2011–4884 Filed 3–7–11; 8:45 am]

BILLING CODE 4310–55–P

DEPARTMENT OF THE INTERIOR

Fish and Wildlife Service

50 CFR Part 17

[Docket No. FWS–R2–ES–2011–0011; MO 92210–0–0008]

Endangered and Threatened Wildlife and Plants; 90-Day Finding on a Petition To List the Texas Kangaroo Rat as Endangered or Threatened

AGENCY: Fish and Wildlife Service, Interior.

ACTION: Notice of petition finding and initiation of status review.

SUMMARY: We, the U.S. Fish and Wildlife Service (Service), announce a 90-day finding on a petition to list the Texas kangaroo rat, *Dipodomys elator,* as endangered or threatened and to designate critical habitat under the Endangered Species Act of 1973, as amended. Based on our review, we find that the petition presents substantial scientific or commercial information indicating that listing the Texas kangaroo rat may be warranted. Therefore, with the publication of this notice, we are initiating a status review to determine if listing the Texas kangaroo rat is warranted. To ensure the status review is comprehensive, we are requesting scientific and commercial data and other information regarding this species. Based on the status review, we will issue a 12-month finding on the petition, which will address whether the petitioned action is warranted, as provided in section 4(b)(3)(B) of the Act.

DATES: To allow us adequate time to conduct this review, we request that we receive information on or before May 9, 2011. Please note that if you are using the Federal eRulemaking Portal (*see* **ADDRESSES** section, below), the deadline for submitting an electronic comment is 11:59 p.m. Eastern Time on this date. After May 9, 2011, you must submit information directly to the Arlington Ecological Services Field Office (*see* **FOR FURTHER INFORMATION CONTACT** section below). Please note that we might not be able to address or incorporate information that we receive after the above requested date.

ADDRESSES: You may submit information by one of the following methods:

- *Federal eRulemaking Portal: http://www.regulations.gov.* In the box that reads "Enter Keyword or ID," enter the Docket number for this finding, which is FWS–R2–ES–2011–0011. Check the box that reads "Open for Comment/Submission," and then click the Search button. You should then see an icon that reads "Submit a Comment." Please ensure that you have found the correct rulemaking before submitting your comment.
- *U.S. mail or hand-delivery:* Public Comments Processing, Attn: FWS–R2–ES–2011–0011; Division of Policy and Directives Management; U.S. Fish and Wildlife Service; 4401 N. Fairfax Drive, Suite 222; Arlington, VA 22203.

We will post all information received on *http://www.regulations.gov.* This generally means that we will post any personal information you provide us (*see* the Request for Information section below for more details).

FOR FURTHER INFORMATION CONTACT: Thomas J. Cloud, Jr., Field Supervisor, Arlington Ecological Services Field Office, 711 Stadium Drive, Suite 252, Arlington, TX 76011; by telephone (817) 277–1100; or by facsimile (817) 277–1129. If you use a telecommunications device for the deaf (TDD), please call the Federal Information Relay Service (FIRS) at 800–877–8339.

SUPPLEMENTARY INFORMATION:

Request for Information

When we make a finding that a petition presents substantial information indicating that listing a species may be warranted, we are required to promptly review the status of the species (status review). For the status review to be complete and based on the best available scientific and commercial information, we request information on the Texas kangaroo rat from governmental agencies, Native American Tribes, the scientific community, industry, and any other interested parties. We seek information on:

(1) The species' biology, range, and population trends, including:

(a) Habitat requirements for feeding, breeding, and sheltering;

(b) Genetics and taxonomy;

(c) Historical and current range, including distribution patterns;

(d) Historical and current population levels, and current and projected trends; and

(e) Past and ongoing conservation measures for the species, its habitat, or both.

(2) The factors that are the basis for making a listing determination for a

species under section 4(a) of the Endangered Species Act of 1973, as amended (Act) (16 U.S.C. 1531 *et seq.*), which are:

(a) The present or threatened destruction, modification, or curtailment of its habitat or range;

(b) Overutilization for commercial, recreational, scientific, or educational purposes;

(c) Disease or predation;

(d) The inadequacy of existing regulatory mechanisms; or

(e) Other natural or manmade factors affecting its continued existence.

(3) Current land use or recent trends in north-central Texas as they pertain to both cultivated crop and cattle ranching.

If, after the status review, we determine that listing the Texas kangaroo rat is warranted, we will propose critical habitat (*see* definition in section 3(5)(A) of the Act) under section 4 of the Act, to the maximum extent prudent and determinable at the time we propose to list the species. Therefore, within the geographical range currently occupied by the Texas kangaroo rat, we request data and information on:

(1) What may constitute "physical or biological features essential to the conservation of the species;"

(2) Where such physical or biological features are currently found; and

(3) Whether any of these features may require special management considerations or protection.

In addition, we request data and information on "specific areas outside the geographical area occupied by the species" that are "essential to the conservation of the species." Please provide specific comments and information as to what, if any, critical habitat you think we should propose for designation if the species is proposed for listing, and explain why such habitat meets the requirements of section 4 of the Act.

Please include sufficient information with your submission (such as scientific journal articles or other publications) to allow us to verify any scientific or commercial information you include.

Submissions merely stating support for or opposition to the action under consideration without providing supporting information, although noted, will not be considered in making a determination. Section 4(b)(1)(A) of the Act directs that determinations as to whether any species is an endangered or threatened species must be made "solely on the basis of the best scientific and commercial data available."

You may submit your information concerning this status review by one of the methods listed in the **ADDRESSES** section. If you submit information via *http://www.regulations.gov,* your entire submission—including any personal identifying information—will be posted on the Web site. If you submit a hardcopy that includes personal identifying information, you may request at the top of your document that we withhold this personal identifying information from public review. However, we cannot guarantee that we will be able to do so. We will post all hardcopy submissions on *http://www.regulations.gov.*

Information and supporting documentation that we received and used in preparing this finding will be available for you to review at *http://www.regulations.gov,* or you may make an appointment during normal business hours at the U.S. Fish and Wildlife Service, Arlington Ecological Services Field Office (*see* **FOR FURTHER INFORMATION CONTACT**).

Background

Section 4(b)(3)(A) of the Act (16 U.S.C. 1533(b)(3)(A)) requires that we make a finding on whether a petition to list, delist, or reclassify a species presents substantial scientific or commercial information indicating that the petitioned action may be warranted. We are to base this finding on information submitted with the petition, supporting information submitted with the petition, and information otherwise available in our files at the time we make the finding. The following five documents represent information contained within our files and are cited in this document: Jones and Bogan (1986), Martin (2002), Shaw (1990), Stangl and Schafer (1990), and Wahl (1987). All other cited references were supplied as part of the petition. To the maximum extent practicable, we are to make this finding within 90 days of our receipt of the petition and publish our notice of the finding promptly in the **Federal Register**.

Our standard for substantial scientific or commercial information within the Code of Federal Regulations (CFR) with regard to a 90-day finding is "that amount of information that would lead a reasonable person to believe that the measure proposed in the petition may be warranted" (50 CFR 424.14(b)). If we find that substantial scientific or commercial information was presented, we are required to promptly conduct a species status review, which is subsequently summarized in our 12-month finding.

Petition History

On January 15, 2010, we received a petition dated January 11, 2010, from WildEarth Guardians of Denver, Colorado, requesting the Texas kangaroo rat be listed as endangered or threatened and that critical habitat be designated under the Act. The petition clearly identified itself as such and included the requisite identification information for the petitioner, as required by 50 CFR 424.14(a). In a July 19, 2010, letter to the petitioner, we responded that we reviewed the information presented in the petition and determined that issuing an emergency regulation temporarily listing the species under section 4(b)(7) of the Act was not warranted. We also stated that due to court orders and judicially approved settlement agreements for other listing and critical habitat determinations under the Act that required nearly all of our listing and critical habitat funding for fiscal year 2010, we would not be able to further address the petition at that time but would complete the action when workload and funding allowed. This finding addresses the petition.

Previous Federal Actions

The Texas kangaroo rat was previously listed as a category 2 candidate species under the Act on December 30, 1982 (47 FR 58454). Category 2 candidates were taxa for which information in our possession indicated that proposing to list was possibly appropriate, but for which substantial data on biological vulnerability and threats were not available to support a proposed listing rule. On December 5, 1996, we published a notice of decision that discontinued the practice of maintaining a category 2 candidate list (61 FR 64481).

Species Information

The Texas kangaroo rat (*Dipodomys elator*), also referred to as Loring's kangaroo rat (Davis 1942, pp. 328–329), was first described by Merriam in 1894 (pp. 109–110). Merriam (1894, pp. 109–110) originally stated *D. elator* was similar to the banner-tailed kangaroo rat (*D. spectabilis*) based on general external morphology (body structure) and Phillip's kangaroo rat (*D. phillipsii*) based on its cranial arch (curve of the skull). Dalquest and Collier (1964, p. 148) suggested *D. elator* most resembles *D. ornatus* (no common name) with regard to its habits, appearance, and skull. Best and Schnell (1974, p. 266) also indicated the Texas kangaroo rat most resembled *D. ornatus* based on bacular (penis bone) measurements. Measurements taken from the baculum, a bone found in the penis of some mammals, varies in shape and size by species and its characteristics are

sometimes used to differentiate between similar species. More recent studies have suggested the Texas kangaroo rat is closely associated with Phillip's kangaroo rat, although these studies did not include *D. ornatus* in their methodology (Hamilton *et al.* 1987, p. 777; Mantooth *et al.* 2000, p. 888). Even though the phylogenetic relationship (genetic relationship of a group of organisms) between *Dipodomys* species is not currently resolved, we accept the characterization of the Texas kangaroo rat as a species because this status is generally accepted in the scientific community (Mantooth *et al.* 2000, p. 885).

The Texas kangaroo rat has an average total length of approximately 290 millimeters (mm) (11.4 inches (in)) (Merriam 1894, p. 109), and has large hind feet as is typical of members of this genus. It has a brownish-yellow dorsum (upper surface) and is whitish along its ventral (belly) surface. The Texas kangaroo rat also has a white-tipped tail and four toes on its hind feet, distinguishing it from Ord's kangaroo rat (*D. ordii*), which has five toes on its hind feet and whose range overlaps that of the Texas kangaroo rat (Caire *et al.* 1989, p. 204).

Generally, Texas kangaroo rats inhabit arid areas that are not prone to flooding (Martin 2002, p. 34); are characterized by short, sparse grasses (Dalquest and Collier 1964, p. 147; Goetze *et al.* 2007, p. 18; Nelson *et al.* 2009, p. 126); and contain little woody canopy cover (Goetze *et al.* 2007, p. 18). Texas kangaroo rats prefer areas where the soil contains a sufficient clay component to support their burrows (Bailey 1905, p. 149; Dalquest and Collier 1964, p. 148; Roberts and Packard 1973, p. 958; Martin and Matocha 1991, p. 355; Goetze *et al.* 2007, p. 17), although it is not exclusively restricted to such soils (Martin and Matocha 1991, p. 355). Their burrows are often associated with *Prosopis* spp. (mesquite trees) (Dalquest and Collier 1964, p. 147; Martin and Matocha 1972, p. 875), although subsequent research has suggested this association may be circumstantial (Stangl *et al.* 1992b, p. 31; Goetze *et al.* 2007, p. 20; Nelson *et al.* 2009, p. 128). For dust bathing, Texas kangaroo rats require areas of bare ground that may not be available in patches of dense vegetation (Goetze *et al.* 2008, pp. 312–313; Nelson *et al.* 2009, p. 127). As such, the Texas kangaroo rat appears to opportunistically burrow in minimally disturbed areas (Stangl *et al.* 1992b, pp. 25–35; Goetze *et al.* 2007, p. 19; Nelson *et al.* 2009, pp. 128–129).

Texas kangaroo rats primarily feed on grass seeds (Chapman 1972, pp. 878–879). However, the seeds, leaves, fruits, and flowers of annual forbs may also be a significant portion of their diet (Chapman 1972, pp. 878–879). Although they do not tend to construct their burrows in croplands (Martin and Matocha 1972, p. 874), Texas kangaroo rats may occasionally enter agricultural fields to gather seeds (Chapman 1972, p. 879). Similar to other kangaroo rats, the Texas kangaroo rat stores food items in burrow caches (Chapman 1972, p. 879).

Little is known about this species' reproductive behavior or physiology (a branch of biology that deals with the functions and activities of life or of living matter, *i.e.,* organs, tissues, or cells), although it is known that the species does not hibernate and evidence suggests it may be capable of breeding throughout the year (Carter *et al.* 1985, p. 1).

The first recorded instance of the Texas kangaroo rat was a specimen collected in 1894 from Clay County, Texas (Merriam 1894, p. 109). In 1905, this species was reported from the Chattanooga vicinity, Comanche County, Oklahoma (Bailey 1905, pp. 148–149). Since these early records, additional Texas kangaroo rat sightings have been recorded from the following counties: Archer, Baylor, Childress, Clay, Cottle, Foard, Hardeman, Montague, Motley, Wichita, and Wilbarger Counties, Texas; and Comanche and Cotton Counties, Oklahoma (Dalquest and Collier 1964, pp. 146–147; Packard and Judd 1968, p. 536; Martin and Matocha 1972, pp. 873–876; Cokendolpher *et al.* 1979, p. 376; Baumgardner 1987, pp. 285–286; Martin and Matocha 1991, p. 354; Martin 2002, p. 10). A single, disjunct record was reported from an unverified sighting in Coryell County, Texas; however, subsequent attempts to confirm its presence in this region have failed, suggesting the original sighting was probably false (Martin and Matocha 1972, pp. 874–875; Martin 2002, p. 10).

The present extent of the Texas kangaroo rat's distribution is largely unknown, but evidence indicates that the species may inhabit only half of its former range. Of the 11 Texas counties that once contained Texas kangaroo rats, it has been suggested that only 5 were known to support them in 2002: Archer, Childress, Hardeman, Motley, and Wichita (Martin 2002, p. 10). The petition cites surveys published in peer-reviewed scientific journals that we deem as reliable information, and indicates that the species may be extirpated from Oklahoma, having last been sighted there in 1969 (Baumgardner 1987, pp. 285–286; Moss and Mehlhop-Cifelli 1990, p. 357; Stangl *et al.* 1992a, p. 19). However, more surveys are needed to determine the species' current distribution.

Evaluation of Information for This Finding

Section 4 of the Act (16 U.S.C. 1533) and its implementing regulations at 50 CFR part 424 set forth the procedures for adding a species to, or removing a species from, the Federal Lists of Endangered and Threatened Wildlife and Plants. A species may be determined to be an endangered or threatened species due to one or more of the five factors described in section 4(a)(1) of the Act:

(A) The present or threatened destruction, modification, or curtailment of its habitat or range;

(B) Overutilization for commercial, recreational, scientific, or educational purposes;

(C) Disease or predation;

(D) The inadequacy of existing regulatory mechanisms; or

(E) Other natural or manmade factors affecting its continued existence.

In considering what factors might constitute threats, we must look beyond the exposure of the species to a particular factor to evaluate whether the species may respond to that factor in a way that causes actual impacts to the species. If there is exposure to a factor and the species responds negatively, the factor may be a threat and we attempt to determine how significant a threat it is. The threat may be significant if it drives, or contributes to, the risk of extinction of the species such that the species may warrant listing as endangered or threatened as those terms are defined by the Act. The identification of factors that could impact a species negatively may not be sufficient to compel a finding that substantial information has been presented suggesting that listing may be warranted. The information should contain evidence or the reasonable extrapolation that any factor(s) may be an operative threat that acts on the species to the point that the species may meet the definition of endangered or threatened under the Act.

In making this 90-day finding, we evaluated whether information regarding threats to the Texas kangaroo rat, as presented in the petition and other information available in our files, is substantial, thereby indicating that the petitioned action may be warranted. Our evaluation of this information is presented below.

A. Present or Threatened Destruction, Modification, or Curtailment of Its Habitat or Range

Information Provided in the Petition

The petition asserts that present or threatened destruction, modification, or curtailment of the habitat or range of the Texas kangaroo rat threatens this species such that listing may be warranted. It identifies five key components affecting the destruction, modification, or curtailment of this species' habitat and range:

(1) Conversion of native habitat to cropland;

(2) Loss of historical ecological processes;

(3) Domestic livestock grazing;

(4) Brush control; and

(5) Development and roads.

The petition suggests that crop fields and cultivated land are uninhabitable by Texas kangaroo rats (WildEarth Guardians 2010, p. 11). It estimates that greater than 15 percent of the range of the Texas kangaroo rat is encroached upon by agriculture, with areas in southwestern Oklahoma being the most impacted (WildEarth Guardians 2010, pp. 11–12); however, the petition did not provide information regarding current land use trends within this species' range. The petition also states that human activities have altered the natural ecological processes within the range of the Texas kangaroo rat and specifically identifies the extirpation of bison and prairie dogs and suppression of naturally occurring fires (WildEarth Guardians 2010, pp. 13–16). It claims that these natural factors were historically responsible for creating and maintaining Texas kangaroo rat habitat, and that their alteration has negatively impacted the species (WildEarth Guardians 2010, p. 13). The petition suggests that domestic livestock grazing has historically been a threat to the Texas kangaroo rat by promoting the encroachment of weeds and woody shrubs, although it also suggests alterations in rangeland management techniques may benefit the species by promoting shortened vegetation and areas of bare ground (WildEarth Guardians 2010, p. 16). In addition, the petition suggests that development and roads have encroached on Texas kangaroo rat habitat (WildEarth Guardians 2010, pp. 16–19), thereby increasing the risks of predation and direct mortality from vehicle collisions (WildEarth Guardians 2010, p. 25). However, it did not explicitly indicate how the encroachment of other urban developments may affect this species. Lastly, the petition suggests that brush control, particularly through the use of chemicals, may be responsible for the degradation of Texas kangaroo rat habitat (WildEarth Guardians 2010, p. 20).

Evaluation of Information Provided in the Petition and Available in Service Files

The sources cited within the petition provide reliable and accurate information regarding the potential impacts that the conversion of native habitat to cropland, the loss of historical ecological processes, domestic livestock grazing, development and roads, and brush control may have on the Texas kangaroo rat. However, upon further examination of the cited materials, we note that the portrayal of this information within the petition may be misleading, and the information requires further examination, as it does not adequately address the potential positive impacts that some of these factors may have on the Texas kangaroo rat or its habitat. An examination of the materials cited in the petition and of those contained within our files is presented below.

One of the primary factors that may be negatively impacting the Texas kangaroo rat is conversion of native habitat to cropland. The conversion of native habitat to cropland results in a loss of habitat because the Texas kangaroo rat does not construct burrows in agricultural crops (Martin and Matocha 1972, p. 874; Martin 2002, pp. 33–34; Goetze *et al.* 2007, p. 18; Goetze *et al.* 2008, p. 313; Nelson *et al.* 2009, pp. 119–120). Additionally, in regions with substantial agricultural development, Texas kangaroo rats can often be found burrowing along the disturbed shoulder of roads, suggesting the practice of cultivating crop land to the margins of roads may further preclude this species from utilizing these areas (Wahl 1987, p. 2; Martin 2002, pp. 35–36). Further, given their relatively small home ranges and movement patterns (Roberts and Packard 1973, pp. 958–961; Stangl and Schafer 1990, p. 6), the fragmentation of suitable habitat by agricultural cultivation of land may isolate Texas kangaroo rats from other nearby populations, thereby reducing genetic exchange (Wahl 1987, p. 2). Over time, reduced genetic exchange may cause isolated populations to die out from the deleterious effects of inbreeding (Keller and Waller 2002, pp. 230–241). Thus, there appears to be substantial information indicating that loss of habitat due to conversion of native rangeland into cropland may be negatively impacting the species. Based on the above evaluation, we find that the information provided in the petition, as well as other information readily available in our files, presents substantial scientific or commercial information indicating that the loss of burrowing habitat due to the conversion of rangeland to cropland may pose a threat to the Texas kangaroo rat such that the petitioned action may be warranted.

The petition also asserts that, in addition to loss of burrowing habitat, the conversion of native rangeland to cropland results in a loss of foraging habitat, which has been presumed to be a key factor in the disappearance of the Texas kangaroo rat from Oklahoma (Moss and Melhop-Cifelli 1990, p. 357). However, the use of cropland for foraging is not completely understood. Goetze *et al.* (2008, p. 313) did not record any Texas kangaroo rats foraging in, or otherwise utilizing, adjacent wheat fields, either before or after harvesting. In contrast, through an analysis of cheek pouch contents, Chapman (1972, pp. 878–879) indicated Texas kangaroo rats foraged in adjacent oat fields following harvest. Bailey (1905, p. 149) found a single specimen whose pouches contained grain from a nearby corn field. Therefore, based on information in our files, there is evidence that Texas kangaroo rats will forage in croplands. Thus, the conversion of rangeland to cropland does not seem to result in a loss of foraging habitat. Based on the above evaluation, we find that the information provided in the petition, as well as other information readily available in our files, does not present substantial scientific or commercial information indicating that the loss of foraging habitat due to the conversion of rangeland to cropland may pose a threat to the Texas kangaroo rat such that the petitioned action may be warranted.

Free-ranging bison, prairie dog colonies, and naturally occurring fires contributed to creation and maintenance of prairies containing short vegetation and areas of bare ground, the preferred habitat of the Texas kangaroo rat (Stangl *et al.* 1992b, pp. 33–34; Nelson *et al.* 2009, p. 128). The propensity of the Texas kangaroo rat to inhabit disturbed areas may be indicative of the species having evolved in the presence of these three factors. The petition asserts that removal of bison, prairie dogs, and naturally occurring fires from the historical range of the Texas kangaroo had a negative impact on this species. However, information in our files indicates that Texas kangaroo rats occur in habitats without bison, prairie dogs colonies, or natural fires (Dalquest and Collier 1964, pp. 146–147; Packard and

Judd 1968, p. 536; Martin and Matocha 1972, pp. 873–876; Cokendolpher *et al.* 1979, p. 376; Baumgardner 1987, pp. 285–286; Martin and Matocha 1991, p. 354; Martin 2002, p. 10). In addition, given the persistence of Texas kangaroo rats in areas without bison, prairie dog colonies, or natural fires, it appears that, while each may help create and maintain suitable habitat, they are not essential for its survival. In the absence of these historical processes, heavy cattle grazing and anthropomorphic disturbances may create suitable Texas kangaroo rat habitat (Stangl *et al.* 1992b, p. 34; Martin 2002, p. 35; Goetze *et al.* 2007, p. 19; Nelson *et al.* 2009, pp. 120–129). Therefore, information provided by the petitioner and in our files does not indicate that the lack of free-ranging bison, prairie dog colonies, and naturally occurring fires has contributed to loss of habitat for the Texas kangaroo rat. Based on the above evaluation, we find that the information provided in the petition, as well as other information readily available in our files, fails to meet our standard for substantial scientific or commercial information indicating that the lack of free-ranging bison, prairie dog colonies, and naturally occurring fires may pose a threat to the Texas kangaroo rat such that the petitioned action may be warranted.

Domestic livestock grazing was noted by the petition as a factor negatively impacting the Texas kangaroo rat by promoting the encroachment of weeds and woody shrubs. The petitioner cites Hafner (1998, p. 16) in suggesting that the Texas kangaroo rat is vulnerable to grazing pressures because grazing presumably degrades grasslands. We believe this claim lacks substantiation because grazing that produces areas of short vegetation interspersed with bare ground is conducive to Texas kangaroo rat inhabitation (Stangl *et al.* 1992b, p. 32; Martin 2002, p. 34; Nelson *et al.* 2009, p. 120). On the other hand, ranch management practices that are designed to maintain dense grass stands lacking areas of bare ground are not suitable for maintaining Texas kangaroo rat habitat (Goetze 2001, pp. 1–3; Martin 2002, p. 34; Nelson *et al.* 2009, p. 120). Under light to moderate grazing pressure, localized areas of heavy grazing and soil disturbance can be achieved through the strategic placement of supplemental feeders and stock tanks (Stangl *et al.* 1992b, pp. 32–34).

The petition also claims that cattle grazing can lead to rangeland encroachment by weeds, woody shrubs, and invasive plants that can be detrimental to the Texas kangaroo rat (WildEarth Guardians 2010, p. 16). According to information we reviewed, the mere presence of woody shrubs, weedy species, and nonnative plants does not preclude the presence of Texas kangaroo rats. In fact, a study of cheek pouch contents indicated that a wide variety of plants, including several nonnative species, serve as possible food sources for the Texas kangaroo rat (Dalquest and Collier 1964, pp. 147–148; Chapman 1972, pp. 878–879; Carter *et al.* 1985, p. 1), and that woody forbs may collect wind-blown soil in which this species constructs its burrows (Nelson *et al.* 2009, p. 120).

We believe that, besides heavy grazing regimes, burrowing and forage habitat for Texas kangaroo rats is not negatively impacted by livestock grazing. Based on the above evaluation, we find that the information provided in the petition, as well as other information readily available in our files, fails to meet our standard for substantial scientific or commercial information indicating that domestic livestock grazing may pose a threat to the Texas kangaroo rat such that the petitioned action may be warranted.

The petition suggests that brush control, particularly through the use of chemicals, is responsible for the degradation of Texas kangaroo rat habitat (WildEarth Guardians 2010, p. 20). Although not scientifically assessed, Chapman (1972, p. 879) found that chemically treated brush control sites showed little evidence of Texas kangaroo rat inhabitation, and indicated additional studies should be conducted to quantify the effects of range and agricultural practices on this species. In contrast, Stangl *et al.* (1992b, p. 31) found that chemical brush control actually enhanced Texas kangaroo rat habitat by providing more bare ground and grassy areas that the species prefers (Goetze *et al.* 2007, p. 18). Further, Texas kangaroo rats have also been shown to preferentially construct burrows on elevated soil mounds, including those that formed around old brush piles (Nelson *et al.* 2009, pp. 124, 128). Thus, we find no evidence that brush control, even through the use of chemicals, is having a detrimental effect on Texas kangaroo rat habitat. Based on the above evaluation, we find that the information provided in the petition, as well as other information readily available in our files, fails to meet our standard for substantial scientific or commercial information indicating that brush control may pose a threat to the Texas kangaroo rat such that the petitioned action may be warranted.

The petition suggests that development and roads have encroached on Texas kangaroo rat habitat (WildEarth Guardians 2010, pp. 16–19), thereby increasing the risks of predation and direct mortality from vehicle collisions (WildEarth Guardians 2010, p. 25). While development and road construction have increased throughout the historic range of the Texas kangaroo rat since its description by Merriam in 1894, the impact of urban expansion on the species' status is unclear. Brock and Kelt (2004, pp. 638–639) suggest that roads increase the likelihood of predation of Texas kangaroo rats and facilitate invasion by exotic plants. Martin (2002, p. 35) found that Texas kangaroo rats extensively utilize suitable, previously disturbed areas along the edges of roadsides, including roadside habitats within agricultural areas, where they may otherwise be precluded. Others have noted that Texas kangaroo rats (Roberts and Packard 1973, p. 960; Stangl and Schafer 1990, p. 11; Stangl *et al.* 1992b, p. 34), and other similar species (Brock and Kelt 2004, pp. 633–639), may preferentially use dirt roads as migration corridors. Also, it is well established that nighttime road surveys are an easy and effective way to determine the presence of the Texas kangaroo rat, suggesting they do not entirely avoid these areas. Although there are reports of specimens killed by vehicular traffic (Dalquest and Collier 1964, p. 146; Jones *et al.* 1988, p. 249), information we reviewed suggests that this is not having a negative impact on the overall species' status.

Additionally, Texas kangaroo rats are nocturnal and remarkably tolerant of human presence (Stangl *et al.* 2005, p. 140; Goetze *et al.* 2008, p. 310), suggesting that urban development around otherwise suitable habitat may not preclude their inhabitance. There is some indication that Texas kangaroo rats are less active on brightly moonlit nights and more active during the darkest times of the night (Jones *et al.* 1988, p. 253; Stangl and Schafer 1990, p. 4; Martin 2002, p. 31), suggesting light may negatively affect this species. In contrast, others have noted this species is tolerant of higher light levels (Bailey 1905, p. 149; Goetze *et al.* 2008, p. 314). Based on the above evaluation, we find that the information provided in the petition, as well as other information readily available in our files, fails to meet our standard for substantial scientific or commercial information indicating that development and roads may pose a threat to the Texas kangaroo rat such that the petitioned action may be warranted.

In conclusion, the fragmentation of the native landscape by conversion of

land to cropland has likely impacted the Texas kangaroo rat by reducing burrowing habitat. This threat, in conjunction with the species' limited long-distance mobility, may be impairing the species' ability to maintain viable populations by genetically isolating them from one another (Wahl 1987, p. 1). However, the effects of cattle grazing, encroachment of roads and development, and brush control methods on Texas kangaroo rat habitat are less certain, and may be beneficial under certain circumstances. Similarly, it appears that loss of historical disturbance by bison, prairie dogs, and fire may be offset by heavy grazing of domestic cattle. We will further analyze potential threats under Factor A during our status review for this species.

Therefore, we find that the information presented in the petition, as well as other information readily available in our files, presents substantial scientific or commercial information to indicate that the Texas kangaroo rat may warrant listing due to present or threatened destruction, modification, or curtailment of the species' habitat or range, primarily due to conversion of native rangeland to agricultural cropland.

B. Overutilization for Commercial, Recreational, Scientific or Educational Purposes

Information Provided in the Petition

The petition claims that early scientific overutilization involving the collection and preservation of Texas kangaroo rat specimens may have had an impact on its range contraction (WildEarth Guardians 2010, p. 20). As indicated in the petition, many early scientific studies of Texas kangaroo rats resulted in preservation of specimens as museum vouchers (Dalquest and Collier 1964, p. 146; Packard and Judd 1968, pp. 535–536; Martin and Matocha 1972, p. 876; Cokendolpher *et al.* 1979, p. 376; Hamilton *et al.* 1987, p. 776).

Evaluation of Information Provided in the Petition and Available in Service Files

We acknowledge that the historical collection and preservation of Texas kangaroo rat specimens were lethal means of collection; however, we have no evidence that collections occurred at a level that impacted the status of the species. Further, current collection methods have resulted in fewer deaths. More recent studies have used live-trapping techniques, although Texas kangaroo rats left overnight in traps are susceptible to cold nightly temperatures and may die following release (Stangl and Schafer 1990, p. 9). In conclusion, we acknowledge that scientific studies have resulted in the death of Texas kangaroo rats, but neither the petition nor information within our files presents substantial scientific or commercial information indicating that collection was, or is, occurring at a level that impacts the overall status of the species. Therefore, we find the petition does not present substantial scientific or commercial information to indicate that overutilization for commercial, recreational, scientific, or educational purposes may present a threat to the Texas kangaroo rat such that the petitioned action may be warranted.

C. Disease or Predation

Information Provided in the Petition

The petition did not identify disease or predation as factors impacting Texas kangaroo rats. In fact, the petition suggests that there are no records of natural predation acting as a threat to Texas kangaroo rats. However, the petition identifies several Texas kangaroo rat parasites, but indicates that disease is not currently known to be a major mortality factor. The petition also recommends further investigation of the potential for sylvatic plague to affect the Texas kangaroo rat (WildEarth Guardians 2010, pp. 20–21).

Evaluation of Information Provided in the Petition and Available in Service Files

After reviewing the original source material cited with the petition, we find that the information within the petition is reliable and accurate regarding Texas kangaroo rat disease and predation. Information in our files suggests that the potential for infection from sylvatic plague does exist, but the disease rarely causes mortality in Texas kangaroo rats (Martin 2002, p. 30). A number of external parasites (Thomas *et al.* 1990, pp. 111–114) and an internal parasite (Pfaffenberger and Best 1989, pp. 76–80) are known to use the Texas kangaroo rat as a host, but their effects on the survival and proliferation of this species are not known. Even though the Texas kangaroo rat is exposed to disease, there is no evidence to indicate that the species is responding to the factor in a way that causes actual impacts to the species.

Similarly, there is no evidence indicating predation is having an impact on the species. Stangl *et al.* (2005, p. 139) found that the Texas kangaroo rat was underrepresented in the diet of barn owls, and attributed this partly to the auditory and locomotion abilities of the rat, which allowed it to escape predation. Remnants of a similar species, the Ord's kangaroo rat (*Dipodomys ordii*), were found in only 4.3 percent of coyote scats in south Texas, suggesting coyotes may not depend heavily on kangaroo rats as a part of their diet (Martin 2002, p. 29). In addition, domesticated cats have been found to prey on the Texas kangaroo rats, but only to a limited extent (Martin 2002, p. 29). Although available information in the petition and our files suggests that Texas kangaroo rats are susceptible to predation, the information we reviewed does not suggest that predation occurs at levels that act as a significant limiting factor to the species throughout its range.

We reviewed information in our files and the information provided by the petitioners, and did not find substantial information to indicate that disease or predation may be outside the natural range of variation such that either could be considered a threat to the Texas kangaroo rat. Therefore, we find the petition does not present substantial scientific or commercial information to indicate that disease or predation may present a threat to the Texas kangaroo rat such that the petitioned action may be warranted.

D. Inadequacy of Existing Regulatory Mechanisms

Information Provided in the Petition

The petition claims there are insufficient existing regulatory mechanisms protecting the Texas kangaroo rat. While this species is listed as threatened under Texas Parks and Wildlife Code, Chapter 68, this status does not prevent the destruction or degradation of Texas kangaroo rat habitat (WildEarth Guardians 2010, p. 21).

Evaluation of Information Provided in the Petition and Available in Service Files

We find that the information within the petition, although limited, is reliable and accurate regarding the inadequacies of existing regulatory mechanisms in protecting the Texas kangaroo rat. As discussed above under Factor A, Texas kangaroo rats do not inhabit cultivated cropland; thus, the expansion of cultivated cropland may fragment existing populations until they are no longer viable (Wahl 1987, p. 1). The "threatened" status of the Texas kangaroo rat under Texas Parks and Wildlife Code does not preclude further land conversion in areas occupied by the species. Therefore, we find that the information provided in petition, as

well as other information readily available in our files, presents substantial scientific or commercial information indicating the petitioned action may be warranted due to the inadequacy of existing regulatory mechanisms.

E. Other Natural or Manmade Factors Affecting the Species' Continued Existence

Information Provided in the Petition

The petition claims that road construction, extermination programs, and climate change are, or may become, threats to the continued existence of the Texas kangaroo rat (WildEarth Guardians 2010, pp. 21–26). The effects of road construction on this species are evaluated above under Factor A. The petition suggests that kangaroo rat extermination programs in the 1920s and 1930s were initiated because these species were implicated in the ongoing desertification of rangeland. The petition also provides evidence of climate change trends (WildEarth Guardians 2010, pp. 21–24) and suggests that the ensuing ecological changes would make this species' current range more unsuitable for its inhabitation.

Evaluation of Information Provided in the Petition and Available in Service Files

After reviewing the original source material cited in the petition, we find that these sources are reliable and accurate. However, we believe that the portrayal of this information within the petition requires further examination as described below.

The petitioner claims that extermination programs may be threatening the continued existence of the Texas kangaroo rat. Sjoberg *et al.* (1984, p. 13) suggested that kangaroo rats, particularly the banner-tailed kangaroo rat (*Dipodomys spectabilis*), whose mound system is extensive, were treated by various methods to remove them from rangelands. However, the Texas kangaroo rat does not make extensive mounds, and its exceptionally small burrow entrances occupy very little of the landscape (Bailey 1905, p. 149; Carter *et al.* 1985, p. 1; Martin 2002, p. 3). This species also has minimal economic impact on agriculture (Martin 2002, p. 3). Therefore, it is unlikely the Texas kangaroo rat was historically subjected to extensive eradication efforts, and there is no evidence presented by the petitioner or readily available in our files indicating that the Texas kangaroo rat was impacted by eradication efforts aimed at other species. In addition, the Texas kangaroo rat is currently protected as a nongame species under Texas Parks and Wildlife Code, Chapter 68, making such eradication efforts illegal. Therefore, we found no evidence that extermination programs are negatively impacting the Texas kangaroo rat.

Also, the petition asserts that climate change trends will make the current range more unsuitable for the Texas kangaroo rat to inhabit (WildEarth Guardians 2010, pp. 21–24). The petitioner presents information that plant and animal communities are expected to shift toward the poles or increase in altitude with increasing global temperatures and drought conditions (Parmesan *et al.* 2000, p. 443; Cameron and Scheel 2001, p. 676; Root and Schneider 2002, pp. 22–23; Karl *et al.* 2009, pp. 72, 132). However, the petition does not provide substantial information indicating how pole-ward shifts in plant and animal communities would negatively impact the Texas kangaroo rat. We believe that increasing global temperatures and drought conditions will likely have little impact on kangaroo rats because they are physiologically and behaviorally well adapted to warm, arid landscapes (Sjoberg *et al.* 1984, p. 12). In addition, Texas kangaroo rats do not appear to be particularly dependent on any single type of vegetation for survival, and are capable of adapting to changing vegetation as is evident from their behavior of gathering nonnative plant seeds (Dalquest and Collier 1964, pp. 147–148; Chapman 1972, pp. 878–879). As such, the information we reviewed does not indicate that climate change-induced, pole-ward shifts in plant and animal communities would result in the Texas kangaroo rat's current range becoming unsuitable for the species to inhabit.

The petition further claims that climate change models show a loss of Texas kangaroo rat habitat. Cameron and Scheel (2001, p. 664) predicted that between 48 and 80 percent of suitable Texas kangaroo rat habitat would be lost under two different climate change models. These losses were estimated from a 2001 baseline of approximately 103,400 square kilometers (km^2) (39,923 square miles (mi^2)) of suitable Texas kangaroo rat habitat, and following correction for vegetation preferences (Cameron and Scheel 2001, p. 664). However, the combined acreage of the 11 Texas counties from which the Texas kangaroo rat has been recorded is approximately 24,500 km^2 (9,460 mi^2), a value much closer to their pre-corrected habitat estimate of 21,200 km^2 (Cameron and Scheel 2001, p. 655). This suggests that the model may have overestimated current suitable habitat. In addition, the study found vegetation preference significantly affected habitat suitability for this species while soil preferences were not significant (Cameron and Scheel 2001, p. 655). In contrast, Shaw (1990, p. 16) found Texas kangaroo rat distributions to vary significantly with soil type. Furthermore, Cameron and Scheel (2001, p. 659) did not assess habitat outside of Texas. If animals are generally predicted to move pole-ward as a result of climate change, the Texas kangaroo rat may partially relocate to Oklahoma, which was not included as part of the Cameron and Scheel (2001) study. Even though Cameron and Scheel (2001, p. 664) predicted theoretically severe implications for climate change on the Texas kangaroo rat based on their models, we could find no evidence to substantiate their claims. Additional analysis is needed to determine the effect of these impacts on the Texas kangaroo rat. We will further analyze the potential impacts of climate change on the species during our status review.

Therefore, we find the petition does not present substantial scientific or commercial information indicating that other natural or manmade factors may affect the continued existence of the Texas kangaroo rat such that the petitioned action may by warranted.

Finding

On the basis of our determination under section 4(b)(3)(A) of the Act, we find that the petition presents substantial scientific or commercial information indicating that listing the Texas kangaroo rat throughout its entire range may be warranted. This finding is based on potential threats posed under Factor A, The Present or Threatened Destruction, Modification, or Curtailment of Its Habitat or Range, and Factor D, The Inadequacy of Existing Regulatory Mechanisms. Specifically, we find that the loss of burrowing habitat and genetic isolation of populations due to the conversion of native rangeland to agricultural cropland, and the inadequacy of existing regulatory mechanisms to protect against such land conversion, may pose a threat to the Texas kangaroo rat throughout all or a significant portion of its range, such that the petitioned action may be warranted. The information provided under Factors B, C, and E was not substantial.

Because we have found that the petition presents substantial information indicating that listing the Texas kangaroo rat may be warranted,

we are initiating a status review to determine whether listing the Texas kangaroo rat under the Act is warranted.

The "substantial information" standard for a 90-day finding differs from the Act's "best scientific and commercial data" standard that applies to a status review to determine whether a petitioned action is warranted. A 90-day finding does not constitute a status review under the Act. In a 12-month finding, we will determine whether a petitioned action is warranted after we have completed a thorough status review of the species, which is conducted following a substantial 90-day finding. Because the Act's standards for 90-day and 12-month findings are different, as described above, a substantial 90-day finding does not mean that the 12-month finding will result in a warranted finding.

References Cited

A complete list of references cited is available on the Internet at *http://www.regulations.gov* and upon request from the Arlington Ecological Services Field Office (*see* **FOR FURTHER INFORMATION CONTACT**).

Author

The primary author of this notice is a staff member of the Arlington Ecological Services Field Office (*see* **FOR FURTHER INFORMATION CONTACT**).

Authority

The authority for this action is the Endangered Species Act of 1973, as amended (16 U.S.C. 1531 *et seq.*).

Dated: February 16, 2011.

Rowan W. Gould,

Acting Director, U.S. Fish and Wildlife Service.

[FR Doc. 2011–5177 Filed 3–7–11; 8:45 am]

BILLING CODE 4310–55–P

Notices

Federal Register
Vol. 76, No. 45
Tuesday, March 8, 2011

This section of the FEDERAL REGISTER contains documents other than rules or proposed rules that are applicable to the public. Notices of hearings and investigations, committee meetings, agency decisions and rulings, delegations of authority, filing of petitions and applications and agency statements of organization and functions are examples of documents appearing in this section.

DEPARTMENT OF AGRICULTURE

Forest Service

Notice of Southwest Idaho Resource Advisory Committee Meeting

AGENCY: Forest Service, USDA.

ACTION: Notice of meeting.

SUMMARY: Pursuant to the authorities in the Federal Advisory Committee Act (Pub. L. 92–463) and under the Secure Rural Schools and Community Self-Determination Act of 2000, as amended, (Pub. L. 110–343), the Boise, Payette, Salmon-Challis, and Sawtooth National Forests' Southwest Idaho Resource Advisory Committee will conduct a business meeting. The meeting is open to the public.

DATES: Thursday, March 17, 2011, beginning at 9 a.m.

ADDRESSES: Idaho Counties Risk Management Program Building, 3100 South Vista Avenue, Boise, Idaho.

SUPPLEMENTARY INFORMATION: Agenda topics will include review and approval of project proposals, and is an open public forum.

FOR FURTHER INFORMATION CONTACT: Kim Pierson, Designated Federal Official, at (208) 347–0301 or e-mail *kpierson@;fs.fed.us*.

Dated: March 2, 2011.

Suzanne C. Rainville,

Forest Supervisor, Payette National Forest.

[FR Doc. 2011–5155 Filed 3–7–11; 8:45 am]

BILLING CODE 3410–11–P

DEPARTMENT OF AGRICULTURE

Forest Service

Ravalli County Resource Advisory Committee

AGENCY: Forest Service, USDA.

ACTION: Notice of meeting.

SUMMARY: The Ravalli County Resource Advisory Committee will meet in Hamilton, Montana. The purpose of the meeting is to discuss upcoming projects.

DATES: The meeting will be held March 22, 2011 at 6:30 p.m.

ADDRESSES: The meeting will be held at 1801 N. First Street. Written comments should be sent to Stevensville RD, 88 Main Street, Stevensville, MT 59870. Comments may also be sent via e-mail to *dritter@fs.fed.us* or via facsimile to 406–777–5461.

All comments, including names and addresses when provided, are placed in the record and are available for public inspection and copying. The public may inspect comments received at 88 Main Street, Stevensville, MT. Visitors are encouraged to call ahead to 406–777–5461 to facilitate entry into the building.

FOR FURTHER INFORMATION CONTACT: Daniel G Ritter, District Ranger, Nancy Trotter, Coordinator.

Individuals who use telecommunication devices for the deaf (TDD) may call the Federal Information Relay Service (FIRS) at 1–800–877–8339 between 8 a.m. and 8 p.m., Eastern Standard Time, Monday through Friday.

SUPPLEMENTARY INFORMATION: The meeting is open to the public. Council discussion is limited to Forest Service staff and Council members. However, persons who wish to bring pertinent matters to the attention of the Council may file written statements with the Council staff before or after the meeting. Public input sessions will be provided and individuals who made written requests by March 21, 2011 will have the opportunity to address the Council at those sessions.

Dated: March 2, 2011.

Julie K. King,

Forest Supervisor.

[FR Doc. 2011–5164 Filed 3–7–11; 8:45 am]

BILLING CODE P

DEPARTMENT OF AGRICULTURE

Forest Service

Modoc County Resource Advisory Committee

AGENCY: Forest Service, USDA.

ACTION: Notice of meeting.

SUMMARY: The Modoc County Resource Advisory Committee will meet in Alturas, CA. The committee is meeting as authorized under the Secure Rural Schools and Community Self-Determination Act (Pub. L. 110–343) and in compliance with the Federal Advisory Committee Act. The purpose of the meeting is to review Resource Advisory Committee Project Applications.

DATES: The meeting will be held March 14, 2011, 4 p.m.

ADDRESSES: The meeting will be held at Modoc National Forest Office, Conference Room, 800 West 12th St., Alturas.

FOR FURTHER INFORMATION CONTACT: Kimberly Anderson, Forest Supervisor and Designated Federal Officer, at (530) 233–8700; or Resource Advisory Coordinator, Stephen Riley at (530) 233–8706.

SUPPLEMENTARY INFORMATION: The business meeting on March 14, 2011 will begin at 4 p.m., at the Modoc National Forest Office, Conference Room, 800 West 12th St., Alturas, California 96101. Agenda topics will include voting and discussion of project proposals that meet the intent of Public Law 110–343. Time will also be set aside for public comments at the beginning of the meeting.

Dated: March 1, 2011.

Mario Longoria,

Civil Rights Specialist.

[FR Doc. 2011–5167 Filed 3–7–11; 8:45 am]

BILLING CODE 3410–11–P

DEPARTMENT OF AGRICULTURE

Forest Service

Yakutat Resource Advisory Committee

AGENCY: Forest Service, USDA.

ACTION: Notice of meeting.

SUMMARY: The Yakutat Resource Advisory Committee will meet in Yakutat, Alaska. The purpose of the meeting is to continue business of the Yakutat Resource Advisory Committee. The committee was formed to carry out the requirements of the Secure Rural Schools and Community Self-Determination Act (Pub. L. 110–343) and in compliance with the Federal Advisory Committee Act. The agenda for this meeting is to review submitted project proposals and consider recommending projects for funding.

Project proposals were due by December 31, 2011 to be considered at this meeting.

DATES: The meeting will be held March 29, 2011 from 6–9 p.m.

ADDRESSES: The meeting will be held at the Kwaan Conference Room, 712 Ocean Cape Road, Yakutat, Alaska. Send written comments to Lee A. Benson, c/o Forest Service, USDA, P.O. Box 327, Yakutat, AK 99689, electronically to *labenson@fs.fed.us,* or via facsimile to 907–784–3457.

All comments, including names and addresses when provided, are placed in the record and are available for public inspection and copying. The public may inspect comments received at Yakutat Ranger District, 712 Ocean Cape Road, Yakutat, AK 99689.

FOR FURTHER INFORMATION CONTACT: Lee A. Benson, District Ranger and Designated Federal Official, Yakutat Ranger District, (907) 784–3359.

SUPPLEMENTARY INFORMATION: The meeting is open to the public. The following business will be conducted: (1) Review status of past projects. (2) Review and recommend future projects; and (3) Public Comment. Persons who wish to bring related matters to the attention of the Committee may file written statements with the Committee staff before or after the meeting.

Dated: February 25, 2011.

Lee A. Benson,

Designated Federal Officer, Yakutat Ranger District, Tongass National Forest.

[FR Doc. 2011–5219 Filed 3–7–11; 8:45 am]

BILLING CODE 3410–11–P

DEPARTMENT OF AGRICULTURE

Forest Service

San Juan National Forest Resource Advisory Committee

AGENCY: Forest Service, USDA.

ACTION: Notice of meeting.

SUMMARY: The San Juan National Forest Resource Advisory Council (RAC) will meet in Durango, Colorado. The committee is meeting as authorized under the Secure Rural Schools and Community Self-Determination Act (Pub. L. 110–343) and in compliance with the Federal Advisory Committee Act. The purpose of the meeting is to gather the newly appointed Committee members together to elect a Chair, determine operating principles and organize to review project proposals and recommend allocations of Title II funds within Archuleta, Dolores, La Plata, and Montezuma counties, Colorado.

DATES: The meeting will be held Friday, March 18, 2011, 9 a.m.—12:30 p.m.

ADDRESSES: The meeting will be held at the San Juan Public Lands Center, 15 Burnett Court, Durango, Colorado in the Sonoran Meeting Rooms. Written comments should be sent to Attn: San Juan National Forest RAC, 15 Burnett Court, Durango, CO 81301. Comments may also be sent via e-mail to *abond@fs.fed.us* or via facsimile to *Attn:* Ann Bond, RAC Coordinator at 970.385.1219.

All comments, including names and addresses when provided, are placed in the record and are available for public inspection and copying. The public may inspect comments received at *http://www.fs.fed.us/r2/sanjuan.*

FOR FURTHER INFORMATION CONTACT: Ann Bond, San Juan National Forest RAC Coordinator, 970.385.1219 or e-mail: *abond@fs.fed.us.*

Individuals who use telecommunication devices for the deaf (TDD) may call the Federal Information Relay Service (FIRS) at 1–800–877–8339 between 8 a.m. and 8 p.m., Eastern Standard Time, Monday through Friday.

SUPPLEMENTARY INFORMATION: The meeting is open to the public, with legal notices published in local papers of records for the involved counties, along with public announcements. The following business will be conducted: The newly appointed Committee members will gather together and meet for the first time, address questions about the roles of members, support of the committee and other pertinent information, elect a chairperson, determine operating principles for the RAC and organize to review project proposals and recommend allocation of Title II funds within Archuleta, Dolores, La Plata and Montezuma counties, Colorado.

Persons who wish to bring related matters to the attention of the Committee may file written statements with the Committee staff before or after the meeting. A public comment period will be provided at 10:30 a.m.

Dated: March 2, 2011.

Mark B. Lambert,

Acting Deputy Forest Supervisor/San Juan Public Lands, San Juan National Forest RAC DFO.

[FR Doc. 2011–5173 Filed 3–7–11; 8:45 am]

BILLING CODE 3410–11–P

BROADCASTING BOARD OF GOVERNORS

Sunshine Act Meeting Notice

DATE AND TIME: Friday, March 11, 2011; 11 a.m.

PLACE: Office of Cuba Broadcasting Headquarters, 4201 NW. 77th Ave., Miami, FL 33166.

SUBJECT: Notice of Meeting of the Broadcasting Board of Governors.

SUMMARY: The Broadcasting Board of Governors (BBG) will be meeting at the time and location listed above. In its meeting, the BBG anticipates it will: Affirm its 2011 policy statements on sexual harassment and equal employment opportunity; consider, among other things, resolutions recognizing anniversaries of various broadcasting services; receive a budget update, an East Asia trip report, and a report from the Director of the International Broadcasting Bureau; receive and consider a report from the BBG Strategy and Budget Committee on the status of the current regional reviews, including Africa and Latin America; and receive and consider a report from the BBG Governance Committee on matters pertaining to committee administrative matters, board operations and responsibilities, grantee oversight, entity authority, and interaction with non-USIB entities. The meeting is open to public observation via streamed webcast, both live and on-demand, on the BBG's public Web site at *http://www.bbg.gov.*

CONTACT PERSON FOR MORE INFORMATION: Persons interested in obtaining more information should contact Paul Kollmer-Dorsey at (202) 203–4545.

Paul Kollmer-Dorsey,

Deputy General Counsel.

[FR Doc. 2011–5426 Filed 3–4–11; 4:15 pm]

BILLING CODE 8610–01–P

DEPARTMENT OF COMMERCE

Submission for OMB Review; Comment Request

The Department of Commerce will submit to the Office of Management and Budget (OMB) for clearance the following proposal for collection of information under the provisions of the Paperwork Reduction Act (44 U.S.C. Chapter 35).

Agency: National Oceanic and Atmospheric Administration (NOAA).

Title: User Engagement Survey for Water Resources Forecasts and Climate Information.

OMB Control Number: None.

Form Number(s): NA.

Type of Request: Regular submission (request for approval of a new information collection).

Number of Respondents: 90.

Average Hours per Response: 30 minutes.

Burden Hours: 45.

Needs and Uses: This request is for approval of a new information collection. The National Weather Service plans to conduct a survey to engage with and assess the science and forecasting needs of stakeholders in the water resources sector. The water resources sector includes agencies and companies operating reservoirs, and private and public interests in regulating rivers. The survey is designed to (1) assess the accessibility and utility of water and climate information and data, (2) assess participants' perceptions and knowledge about water and climate, and (3) evaluate user needs and the gaps in existing water and climate information. Participation in the survey will be entirely voluntary and will usually be in conjunction with workshops related to water resources and/or climate.

Affected Public: State, local and Tribal government; individuals or households; not-for-profit organizations.

Frequency: Annually.

Respondent's Obligation: Voluntary.

OMB Desk Officer: *OIRA_Submission@omb.eop.gov.*

Copies of the above information collection proposal can be obtained by calling or writing Diana Hynek, Departmental Paperwork Clearance Officer, (202) 482–0266, Department of Commerce, Room 6616, 14th and Constitution Avenue, NW., Washington, DC 20230 (or via the Internet at *dHynek@doc.gov*).

Written comments and recommendations for the proposed information collection should be sent within 30 days of publication of this notice to *OIRA_Submission@omb.eop.gov.*

Dated: March 2, 2011.

Gwellnar Banks,

Management Analyst, Office of the Chief Information Officer.

[FR Doc. 2011–5122 Filed 3–7–11; 8:45 am]

BILLING CODE 3510–KE–P

DEPARTMENT OF COMMERCE

Submission for OMB Review; Comment Request

The Department of Commerce will submit to the Office of Management and Budget (OMB) for clearance the following proposal for collection of information under the provisions of the Paperwork Reduction Act (44 U.S.C. chapter 35).

Agency: U.S. Census Bureau.

Title: Survey of Construction—Questionnaire for Building Permit Official.

OMB Control Number: 0607–0125.

Form Number(s): SOC–QBPO.

Type of Request: Extension of a currently approved collection.

Burden Hours: 225.

Number of Respondents: 900.

Average Hours per Response: 15 minutes.

Needs and Uses: The information collected on the SOC–QBPO is necessary to carry out the sampling for the Survey of Housing Starts, Sales and Completions (OMB number 0607–0110), also known as the Survey of Construction (SOC). Government agencies and private companies use statistics from SOC to monitor and evaluate the large and dynamic housing construction industry.

The SOC–QBPO is an electronic questionnaire. Census Bureau field representatives (FRs) use Computer Assisted Personal Interviewing (CAPI) to collect the data. The FRs use the SOC–QBPO to obtain information on the operating procedures of a permit office. This enables them to locate, classify, list, and sample building permits for residential construction. These permits are used as the basis for the sample selected for SOC. The Census Bureau also uses the information to verify and update the geographic coverage of permit offices.

Failure to collect this information would make it difficult, if not impossible, to classify accurately and sample building permits for the SOC. The SOC produces data for two principal economic indicators: New Residential Construction (housing starts and housing completions) and New Residential Sales. Information from the SOC is also used in the estimation of the value of new residential construction put in place for the Census Bureau's data on construction spending.

Affected Public: State, local or Tribal Government.

Frequency: Annually.

Respondent's Obligation: Voluntary.

Legal Authority: Title 13 U.S.C., Section 182.

OMB Desk Officer: Brian Harris-Kojetin, (202) 395–7314.

Copies of the above information collection proposal can be obtained by calling or writing Diana Hynek, Departmental Paperwork Clearance Officer, (202) 482–0266, Department of Commerce, Room 6616, 14th and Constitution Avenue, NW., Washington, DC 20230 (or via the Internet at *dhynek@doc.gov*).

Written comments and recommendations for the proposed information collection should be sent within 30 days of publication of this notice to Brian Harris-Kojetin, OMB Desk Officer either by fax (202–395–7245) or e-mail (*bharrisk@omb.eop.gov*).

Dated: March 3, 2011.

Gwellnar Banks,

Management Analyst, Office of the Chief Information Officer.

[FR Doc. 2011–5143 Filed 3–7–11; 8:45 am]

BILLING CODE 3510–07–P

DEPARTMENT OF COMMERCE

Office of the Secretary

Notice of an Opportunity To Serve on the Innovation Advisory Board Advising the Department of Commerce in the Development of a Study on the Economic Competitiveness and Innovative Capacity of the United States

AGENCY: Office of the Secretary, U.S. Department of Commerce.

ACTION: Notice.

SUMMARY: The Department of Commerce is inviting expressions of interest to service on the Innovation Advisory Board from individuals with interest in advising the Department of Commerce as it develops a study on the economic competitiveness and innovative capacity of the United States. The Department is particularly interested in businesses leaders, economic or innovation policy experts, and State and local government officials active in technology-based economic development.

DATES: All information must be received by the Office of the Secretary at the e-mail or postal address below by close of business (EDT) on March 22, 2011.

ADDRESSES: Please submit relevant information via e-mail to *InnovationAB@doc.gov* or by mail to John Connor, Office of the Secretary, U.S. Department of Commerce, Room 5835, 1401 Constitution Avenue, NW., Washington, DC 20230.

SUPPLEMENTARY INFORMATION:

Background

The America COMPETES Reauthorization Act of 2010 (COMPETES) was signed into law on January 4, 2011. Section 604 of that Act requires that the Secretary of Commerce complete a comprehensive study of the economic competitiveness and

innovative capacity of the United States by January 4, 2012. This study is to be conducted in consultation with the National Economic Council, Federal agencies as the Secretary considers appropriate, and an Innovation Advisory Board.

COMPETES directs that the study shall include the following:

(A) An analysis of the United States economy and innovation infrastructure.

(B) An assessment of the following:

(i) The current competitive and innovation performance of the United States economy relative to other countries that compete economically with the United States.

(ii) Economic competitiveness and domestic innovation in the current business climate, including tax and Federal regulatory policy.

(iii) The business climate of the United States and those of other countries that compete economically with the United States.

(iv) Regional issues that influence the economic competitiveness and innovation capacity of the United States, including—

(I) the roles of State and local governments and institutions of higher education; and

(II) regional factors that contribute positively to innovation.

(v) The effectiveness of the Federal Government in supporting and promoting economic competitiveness and innovation, including any duplicative efforts of, or gaps in coverage between, Federal agencies and departments.

(vi) Barriers to competitiveness in newly emerging business or technology sectors, factors influencing underperforming economic sectors, unique issues facing small and medium enterprises, and barriers to the development and evolution of start-ups, firms, and industries.

(vii) The effects of domestic and international trade policy on the competitiveness of the United States and the United States economy.

(viii) United States export promotion and export finance programs relative to export promotion and export finance programs of other countries that compete economically with the United States, including Canada, France, Germany, Italy, Japan, Korea, and the United Kingdom, with noting of export promotion and export finance programs carried out by such countries that are not analogous to any programs carried out by the United States.

(ix) The effectiveness of current policies and programs affecting exports, including an assessment of Federal trade restrictions and State and Federal export promotion activities.

(x) The effectiveness of the Federal Government and Federally funded research and development centers in supporting and promoting technology commercialization and technology transfer.

(xi) Domestic and international intellectual property policies and practices.

(xii) Manufacturing capacity, logistics, and supply chain dynamics of major export sectors, including access to a skilled workforce, physical infrastructure, and broadband network infrastructure.

(xiii) Federal and State policies relating to science, technology, and education and other relevant Federal and State policies designed to promote commercial innovation, including immigration policies.

Selection Criteria

COMPETES directs the Secretary of Commerce to appoint a 15 member Innovation Advisory Board representing all major industry sectors for purposes of obtaining advice with respect to the conduct of the study described above. The majority of Board members must be comprised of representatives from private industry, including large and small firms, representing both advanced technology sectors and more traditional sectors that use technology. The Board may include economic or innovation policy experts, State and local government officials active in technology-based economic development, and representatives from higher education.

Board members will serve until the completion of the study, which, under the Act must be completed by January 4, 2012.

Members are required to meet to provide input to the study at two critical development points: Development of the extended outline and review of draft. In addition, members may be called upon to participate in events around the country designed to solicit additional information regarding specific issues related to the economic competitiveness and innovative capacity of the United States.

Board members are not considered Federal government employees by virtue of their service as a member of the Board and will receive no compensation from the Federal government for their participation in Board activities. Members participating in Board meetings and events will be not be compensated for travel or other expenses.

To be considered for membership, please provide the following:

1. Name, title, and personal resume of the individual requesting consideration;

2. A brief statement of why the person should be considered for membership on the Board. This statement should address the individual's relevant expertise in factors impacting the economic competitiveness and innovative capacity of the United States; and

3. A brief biography.

Appointments of members to the Board will be made by the Secretary of Commerce.

Dated: March 2, 2011.

John Connor,

Office of the Secretary.

[FR Doc. 2011–5133 Filed 3–7–11; 8:45 am]

BILLING CODE 3510–EA–P

DEPARTMENT OF COMMERCE

Bureau of the Census

[Docket Number 110209126–1124–02]

The 2010 Census Count Question Resolution Program

AGENCY: Bureau of the Census, Commerce.

ACTION: Notice of Program.

SUMMARY: On May 26, 2010, the Bureau of the Census (Census Bureau) published in the **Federal Register** an initial notice relating to the 2010 Census Count Question Resolution (CQR) Program (75 FR 29508). This notice provides final information concerning the CQR Program. The CQR Program will address requests for corrections to the 2010 Census count of housing units and/or group quarters (GQs) and associated population, based on three types of challenges (1) boundary, (2) geocoding, and (3) coverage. The CQR Program is not a mechanism or process to challenge or revise the population counts sent to the President by December 31, 2010, which are used to apportion the U.S. House of Representatives. The Census Bureau will accept challenges between June 1, 2011, and June 1, 2013, and will review challenges in the order they are received.

DATES: *Effective Date:* This program will become effective on June 1, 2011, and will end on June 1, 2013.

FOR FURTHER INFORMATION CONTACT: Count Question Resolution Program, Decennial Management Division, U.S. Census Bureau, Washington, DC 20233. Telephone: 301–763–9329; Fax: 301–763–9321; E-mail: *dmd.cqr@census.gov:*

or visit the CQR Web site at: *http://2010census.gov/about/cqr*.

SUPPLEMENTARY INFORMATION:

Introduction

On May 26, 2010, the Census Bureau published in the **Federal Register** an initial notice relating to the 2010 Census Count Question Resolution (CQR) Program (75 FR 25908). The Census Bureau received one set of comments. The comments suggested additional clarifying text for key concepts presented in the document regarding the scope of and required documentation for the CQR Program. The Census Bureau incorporated text to clarify the description of the program concepts, and the revisions are included in this program announcement. Please *see* the Definitions of Key Terms section at the end of this notice for an explanation of various terms throughout this notice.

CQR Program procedures include researching challenges and, as appropriate, making corrections and issuing revised official population, and housing and group quarters counts, which the Census Bureau will also use for the Census Bureau's Population Estimates Program. The Census Bureau will not accept challenges to the overseas counts of persons in the military and Federal civilian personnel stationed overseas and their dependents living with them. The Census Bureau obtains overseas counts using administrative records and uses the records solely for apportioning seats in the U.S. House of Representatives. These records do not provide the sub-State geographic information required for the CQR Program.

The Census Bureau will only accept challenges from the highest elected official of State, local, and Tribal area governments or those representing them or acting on their behalf. All challenges must be sent to the Census Bureau's headquarters.

The Census Bureau will make all corrections on the basis of appropriate documentation provided by the challenging entities and through research of the official 2010 Census records by the Census Bureau. The Census Bureau will not collect additional data for the enumeration of living quarters through the CQR Program. The Census Bureau will respond to all challenges and will notify all affected governmental units of any corrections to their official counts as a result of a CQR Program decision.

Corrections made to the population, and housing and group quarters counts by this program will result in the issuance of new official 2010 Census counts to the officials of governmental units affected. These corrections may be used by the governmental units for future programs requiring official 2010 Census data. The Census Bureau will use these corrections to:

—Modify the decennial census file for use in annual postcensal estimates beginning in December 2012, and

—Create the errata information we will make available on the Census Bureau's *American FactFinder* Web site at *http://factfinder2.census.gov.*

The Census Bureau will NOT incorporate the CQR corrections into 2010 data summary files and tables prepared after the CQR process begins nor will the Census Bureau re-tabulate Summary File 1 or Demographic Profile tables.

Background

The Census Bureau has a comprehensive program to improve the quality of the housing unit and GQ counts. In 2002, the Census Bureau initiated the Master Address File/Topologically Integrated Geographic Encoding and Referencing (MAF/TIGER) Accuracy Improvement Project (MTAIP) as part of the MAF/TIGER Enhancements Program (MTEP). This project acquired Geographic Information System (GIS) files, aerial photography, and Global Positioning System (GPS) data from various sources nationwide to update the TIGER database. One of the primary goals of the project was to develop a highly accurate geographic database of the United States, Puerto Rico, and the Island Areas. The Census Bureau focused on improving the accuracy of street feature coordinates to provide base information suitable for use with GPS-equipped hand-held devices that would facilitate the gathering of accurate location and census information for all living quarters and workplaces.

The Census Bureau implemented a number of address list development programs in preparation for the 2010 Census, the earliest of which was the Local Update of Census Addresses (LUCA) Program that started in 2007. Participating State, local, and Tribal area governments were given the opportunity to review and update the Census Bureau's address list of living quarters before it was used for the actual census enumeration. In cases where the State, local, or Tribal area government and the Census Bureau could not agree on the address list, the governmental unit could use an appeal process administered by the LUCA Appeals Office, which was set up by the Office of Management and Budget (OMB) to provide an independent adjudication. The full LUCA operation included the review of materials by participants (described above) from November 2007 through March 2008; Census Bureau Address Canvassing field work from March through July 2009; LUCA Detailed Feedback to participants from October through November 2009; and the LUCA Appeals process which concluded at the end of March 2010. In addition to LUCA, governmental units with city-style address areas had another opportunity to update the 2010 Census address list by the New Construction program, which occurred from November 2009 through March 2010. The purpose of the New Construction program was to obtain city-style addresses for newly built housing units. Participants in this program were asked to submit addresses for any housing unit for which basic construction would have been completed between March 2009 (the start of the Address Canvassing operation) and before Census Day, (April 1, 2010). Addresses sent to the Census Bureau from New Construction program participants were added to the Mail Delivery for Late Adds operation or, if received after that program began, the addresses were included in the Vacant Delete Check operation. Between 2009 and 2010, the Census Bureau conducted the Boundary Validation Program. This program provided highest elected officials and Tribal chairpersons with maps that showed boundaries of their respective jurisdictions and instructed them on how to make boundary corrections.

From September through October 2009, the Census Bureau also conducted the Group Quarters Validation and Reinterview operations to verify or correct address records identified as GQs. From March through April 2010, the Census Bureau conducted the Enumeration at Transitory Locations operation that was designed to enumerate eligible populations living in transitory locations such as campgrounds and marinas. After the development of the 2010 Census mailing list, a number of situations occurred requiring the Census Bureau to implement an additional mail delivery. This was referred to as the Mail Delivery for Late Adds and included city-style addresses from the LUCA appeals, Census Bureau research of ungeocoded addresses in the Master Address File, and additional self-response from the spring 2010 Delivery Sequence File update from the United States Postal Service. The Mail Delivery for Late Adds operation reduced the number of addresses included in the Nonresponse

Follow-up (NRFU) Vacant Delete Check operation (described below).

Between April and August 2010, the Coverage Follow-up (CFU) operation improved the 2010 Census by calling households that were identified as having a potential error in their household count. From July through August 2010, the NRFU Vacant Delete Check operation verified the vacant and delete assessments of census workers. Vacant Delete Check also enumerated housing units that census workers inaccurately classified as vacant or nonexistent in an earlier census operation. This operation also enumerated added housing units discovered in an earlier census operation such as those added or reinstated through the 2010 LUCA appeals process; records added from the Housing Unit Address Review conducted as part of the Count Review operation; records added as a result of research into potentially missed addresses in Address Canvassing (as reported on internal documents known as INFO–COMMs); previously ungeocoded addresses which obtained geocodes from the Census Bureau research of ungeocoded addresses in the Master Address File; new addresses from periodic postal updates; records added by Update/Leave; and addresses provided in the New Construction operation by Tribal and local governments.

In August through early September 2010, the Census Bureau conducted the Field Verification operation. The Field Verification operation was a final check for certain address records from sources, such as Be Counted, Telephone Questionnaire Assistance (TQA), Group Quarters Enumeration, questionnaire fulfillment and TQA interview, as well as particular categories of housing-level cases identified through person matching for the CFU operation. Data collection for the 2010 Census ended in the Local Census Offices in September 2010. The Census Bureau strictly enforced the schedule to allow the time to produce the State-level apportionment counts by December 31, 2010, as required by law.

Relevant 2010 Census Data Releases

The Redistricting Data (pursuant to Pub. L. 94–171) are scheduled for release from February through March 2011. In May 2011, the Census Bureau will release the "Advance Release of Group Quarters Data from Summary File1"to the public through a file transfer protocol (ftp) site. The ftp site is a link to a location at a Census Bureau network server. Users go to the link and download data from electronic folders. Many data users have automatic programs to retrieve data at certain time intervals. This GQ file will include block-level GQ counts by GQ type. The Demographic Profile table, which contains selected population and housing characteristics, will also be released in May 2011. The release of Summary File 1 (SF1) on a flow basis to States will occur between June and August 2011. The SF1 will contain block-level housing unit and GQ counts. Collectively, these census data products will provide CQR Program participants with the appropriate tools for accessing the accuracy of their decennial census counts.

The highest elected official or chairperson from a State, local, or Tribal area government must contact the Census Bureau CQR Office in order to initiate the challenge process. The Census Bureau will also accept challenges on official jurisdictional letterhead from county clerks, city planners, local planning board representatives, and State legislative representatives with redistricting functions within each State and State equivalents who are acting on the behalf of a local or Tribal jurisdiction to submit a challenge.

Types of Challenges Considered for the 2010 Census CQR Program

The 2010 Census CQR Program may make corrections as a result of the following three types of challenges:

- *Boundary*—These challenges may address the inaccurate reporting or the inaccurate recording of boundaries legally in effect on January 1, 2010. The Census Bureau needs to ensure that the geographic assignment information provided by governmental units does not, in fact, reflect boundary changes made after January 1, 2010.
- *Geocoding*— These challenges identify suspected errors in the geographic location of living quarter addresses within the governmental unit boundaries and census tabulation blocks.
- *Coverage*—These challenges, if upheld by the Census Bureau, result in the addition or deletion of specific living quarters and persons associated with them identified during the census process, but which were erroneously included as duplicates or excluded due to processing errors.

Challenges That Result in Corrections

The Census Bureau will issue corrected CQR counts based on the housing unit and population counts as of April 1, 2010. The governmental units may use new official census counts for all programs requiring official 2010 Census data. The Census Bureau will not make corrections to the 2010 population counts for individual housing units or GQs, or corrections to the characteristics of the population and housing inventory. The Census Bureau will modify the decennial file with the CQR corrections for use in generating the 2012 postcensal estimates. The American FactFinder will provide the inventory of corrections as errata to the original data. The Census Bureau will not revise 2010 Census base files, 2010 Census apportionment counts, redistricting data, or 2010 Census data products. The Census Bureau will send a letter with a certification of the population, housing and group quarters counts for all jurisdictions affected by the results of a CQR challenge.

Challenges That Do Not Result in Corrections

When a State, local, or Tribal area government provides evidence that the Census Bureau missed housing units or GQs that existed on April 1, 2010, but the CQR research and 2010 Census records show that all of the Census Bureau's boundary information, geocoding, and coverage processing were correctly implemented, the Census Bureau will respond by sending a letter to the official or his/her representative stating that the Census Bureau will maintain the documentation for consideration in the context of address list updating activities in the future, but will not issue a revised count.

Internal Census Bureau Review

The primary internal review process for the 2010 Census counts is the Count Review Program. This program started in February 2010, with Census Bureau staff and members of the Federal-State Cooperative Program for Population Estimates (FSCPE) working together to review address lists and identify clusters of missing housing unit addresses. The Count Review Program also includes a Census Bureau staff review of housing unit and group quarters counts and associated population totals prior to the release of the data. In August 2010, the FSCPE representatives reviewed potential missing or misallocated 2010 Census GQs.

In addition to challenges received through the CQR Program, findings from the Count Review GQ internal review may result in cases for the CQR Program when there was insufficient time to make corrections before the end of the Count Review operation on August 17, 2010. The Count Review Program staff will create CQR internal referrals for unresolved GQ issues within the scope

of the CQR Program. The Census Bureau may make corrections as a result of this review. When the Census Bureau makes changes to the housing unit and/or GQ counts based on internal review, new official counts will be issued to all affected jurisdictions as changes are verified and recalculations are completed. The CQR corrections will be presented on the American FactFinder to represent total population, housing unit and group quarters count changes made to governmental units from the 2010 Census CQR Program.

Method of Collection

Criteria for Acceptable Documentation Necessary To Initiate the 2010 Census CQR Process

The Census Bureau requires documentation before committing resources to investigate concerns raised by State, local, or Tribal area officials or their representatives about boundary and geographic assignment errors or the accuracy of the census housing unit or GQ counts. The submitted challenges must specify whether the challenge disputes the location of a governmental unit boundary or the number of housing units and/or GQs in one or more census tabulation blocks, or both. The challenger must provide the following documentation based on the type of challenge:

• For boundary challenges, indicate on a map the location of the governmental unit boundary in dispute and show where the Census Bureau incorrectly depicts the boundary. Show the correct boundary legally effective January 1, 2010. Additionally, provide the Census Bureau with a list of addresses in challenged 2010 Census tabulation blocks, indicating their location in relationship to the boundary that the governmental unit wants the Census Bureau to correct. A governmental unit does not need to provide the Census Bureau with a list of addresses if their challenge is solely for a name or status change, or to add a new entity. (*See* the section "Types of Acceptable Maps".)

• For geocoding and coverage challenges, identify the specific contested 2010 Census tabulation block and a list of the addresses for all housing units or GQs in that block on April 1, 2010. A governmental unit does not need to provide the Census Bureau with a list of addresses if their challenge is solely for a name or status change, or to add a new entity. (*See* "Boundary Challenge Criteria.")

Boundary Challenge Criteria

State, local, or Tribal area governments must base challenges on boundaries legally in effect on January 1, 2010. The Census Bureau will compare the maps and appropriate supporting documentation submitted by the challenging governmental unit with the information used by the Census Bureau to depict the boundaries for the 2010 Census.

Maps submitted by State, local or Tribal area governments must show the correct location of the boundary and the portion of the boundary that the Census Bureau potentially depicted incorrectly, including the 2010 Census tabulation block numbers associated with the boundary. The State, local, or Tribal area government must also provide the Census Bureau with a list of addresses in challenged 2010 Census tabulation blocks, indicating their location in relationship to the boundary that the governmental unit wants the Census Bureau to correct.

For boundary challenges affected by legal actions not recorded by the Census Bureau, governmental units must submit the effective date and the ordinance number or law that effectuated the change in boundaries, provide evidence that the State certifying official has approved the boundary change if required by State law, and provide a statement that the boundary is not under litigation.

Types of Acceptable Maps

• 2010 Census Public Law 94–171 County Block Maps—The Census Bureau produces these maps as a reference for the Redistricting Data Files available for all States, the District of Columbia, and Puerto Rico.

• 2010 Census County Block Maps—The Census Bureau produces maps as a reference to the Summary File 1 data.

• The 2010 TIGER/Line File—The Census Bureau provides digital data in ESRI shapefile format. The governmental unit may generate maps based on information from the Census Bureau 2010 TIGER/Line shapefiles using a commercial geographic information system (GIS). These maps must identify the State, county, governmental unit, census tract, census tabulation block, and any other legal entity involved in a challenge. If a challenge involves an American Indian reservation or off-reservation trust lands, the maps must identify the American Indian area, the census tract (either county-based census tract or Tribal census tract) and the census tabulation block.

• Other Maps Showing Census Bureau 2010 Tabulation Block Numbers and Boundaries—These maps should show geographic boundaries as of January 1, 2010, that identify census tabulation blocks, census tracts, legal and statistical entities and State boundaries; maps depicting data collection blocks cannot be used. In general, maps should be comparable to 2010 Census maps.

Challenge Criteria

Housing Unit Count

The Public Law 94–171 Redistricting Data Summary File and the Summary File 1 can be used to obtain census tabulation block housing unit counts. Challenges must include a complete address list for all units that the challenger thinks the Census Bureau should include in each contested block. (Refer to the Section "Types of Address Lists.") State, local, or Tribal area officials must certify that the addresses on their lists existed and could be lived in on April 1, 2010. The supporting evidence must specifically show the validity of any address and reflect residential addresses that existed as viable living quarters on April 1, 2010. Challenges to housing unit counts must specify the 2010 Census tract and tabulation block(s) for which the counts are being challenged.

Group Quarters Count

The "Advance Release of Group Quarters Data from Summary File 1" provides the GQ counts for 2010 Census tabulation blocks. Summary File 1 itself may also be used to obtain census tabulation blocks and GQ counts. Challenges must include a complete address list for all GQ buildings that the challenger thinks the Census Bureau should include in each contested block. The State, local, or Tribal area official must certify that the addresses on their lists existed and could be lived in on April 1, 2010. The supporting evidence must specifically reflect the validity of any address list source, showing the population within a GQ, and must clearly identify the list as being the resident population no later than April 1, 2010. Challenges to GQ counts must specify the associated 2010 census tract and census tabulation block(s).

Types of Address Lists

• *City-Style Address Lists*—A city-style address must include house number, street name, city, State, ZIP Code, and county. The city-style address list must be organized by 2010 Census tabulation block within 2010 Census tract. Also, it must include any applicable housing unit identifiers in multi-unit buildings (such as apartment

numbers). The Census Bureau requests the challenger to use the address list templates provided on the CQR Web site and submit the challenge electronically. In addition, mark the exact location of each challenged address on a map containing 2010 census tract and tabulation block(s).

• *Non-City-Style Address Lists*—Non-city-style addresses include rural route addresses and any other addresses that do not contain a complete house number, street name, city, State, ZIP Code, and county. The non-city-style address list must be organized by 2010 Census tabulation block within census tract. If a household receives mail at a post office box address, provide the E–911 address if it exists. The State, local or Tribal area government must provide the exact location for each challenged address on a map containing 2010 census tract and tabulation block(s). Focus the list on the specific area where the challenged addresses exist. All addresses in the challenged block must contain a description of the housing units and locations.

• *Group Quarters Address Lists*—GQ addresses can include city-style or non-city-style addresses. Provide the name, number and street address, city, State, ZIP Code, and county of the GQ as of April 1, 2010. Also provide a current telephone number or e-mail address for the contact at the GQ. The GQ address list must be organized by 2010 Census tabulation block within census tract. The challenger must provide documentation that supports the number of persons residing at the GQ on April 1, 2010. In addition, the challenger must provide the 2010 Census tract and tabulation block number for the location of the GQ, including the exact location for each challenged address on a map containing 2010 Census tract and tabulation block(s).

Census Bureau Actions

The Census Bureau will investigate acceptable challenges to determine whether it can identify information about the existence of a housing unit or occupied GQ on April 1, 2010, that does not appear in the final census files due to an error in processing the information. The Census Bureau will neither collect new data nor make changes to apportionment counts, redistricting data, or any 2010 Census data products.

Definitions of Key Terms

American FactFinder—An interactive Web site used for accessing and disseminating the results of many Census Bureau programs. The system is available through the Internet, and the Census Bureau will use it to disseminate the results of the 2010 Census. The American FactFinder Web site can be found at: *http://factfinder2.census.gov*.

Census Tabulation Block—A geographic area bounded by visible features, such as streets, roads, streams, and railroad tracts, and by nonvisible boundaries, such as city, town, township, and county limits, and short line-of-sight extensions of streets and roads. Generally, census blocks are small in area; for example, a block in a city bounded on all sides by streets. Census blocks in suburban and rural areas may be large, irregular, and bounded by a variety of features. In remote areas, census blocks may encompass hundreds of square miles. Census blocks are the smallest geographic entities for which the Census Bureau tabulates decennial census information.

Census Tract—Small, relatively permanent statistical subdivisions of a county or equivalent entity updated by local participants prior to each decennial census as part of the Census Bureau's Participant Statistical Areas Program in accordance with Census Bureau guidelines. Census tracts generally have a population size between 1,200 and 8,000 people, and have an optimum size of 4,000 people.

County or Equivalent Entity—The primary legal subdivision of States and equivalent entities. In Louisiana, these divisions are known as parishes. In Alaska, which has no counties, the equivalent entities are boroughs, city and boroughs, municipalities, and census areas; the latter of which are delineated cooperatively for statistical purposes by the State of Alaska and the Census Bureau. In Puerto Rico, the primary divisions are municipios.

Demographic Profile—A table containing data that shows information on total population, sex, age, race, Hispanic or Latino origin, household relationship, GQ population, household type, housing occupancy, and housing tenure.

E–911 Address—An E–911 address is a site location address assigned by using a mileage measurement to a driveway on a named road. An E–911 address helps emergency services to locate residents and are required to be displayed on living quarters and visible from the road.

Group Quarters—A group quarters is defined as a place where people live or stay, in a group-living arrangement that is owned or managed by a governmental unit or organization providing housing and services for the residents. This is not a typical household-type living arrangement. These services may include custodial or medical care as well as other types of assistance, and residency is commonly restricted to those receiving these services. People living in GQs are usually not related to each other. The two general types of GQs are institutional and non-institutional. Institutional GQs include nursing homes, mental hospitals and psychiatric units in other hospitals, hospitals with patients who have no usual home elsewhere, inpatient hospice facilities, correctional facilities for adults and juveniles, and residential schools for people with disabilities. Non-institutional GQs include college or university dormitories and residence halls, military barracks, group homes, shelters, convents, migratory farm worker camps, military ship, and maritime/merchant vessels. GQs may have housing for staff as their usual residence at the GQ address.

Hawaiian Homelands—An area created and held in trust for the benefit of native Hawaiians by the State of Hawaii, pursuant to the Hawaiian Homes Commission Act of 1920, as amended. Hawaiian homelands were a new type of geographic entity for the 2000 Census.

Housing Unit—Living quarters in which the occupants live separately from any other individuals in the building and have direct access to their living quarters from outside the building or through a common hall. Housing units include such places as houses, apartments, mobile homes or trailers, groups of rooms, or a single room that is occupied as a separate living quarters, or if vacant, is intended for occupancy as a separate living quarters. A housing unit is defined as a living quarters that is closed to the elements and has all exterior windows and doors installed and final usable floors in place. For vacant units, the criteria of separateness and direct access are applied to the intended occupants, whenever possible. If the Census Bureau cannot obtain the information, the criteria are applied to the previous occupants.

Incorporated Place—A type of governmental unit, incorporated under State law as a city, city and borough, municipality, town (except in New England, New York, and Wisconsin), borough (except in Alaska and New York), or village, that has legally prescribed limits, powers, and functions. A few incorporated places do not have a legal description.

Minor Civil Division(MCD)—A type of governmental unit that is the primary governmental or administrative division of a county or statistically equivalent entity in 28 States, the District of

Columbia, Puerto Rico, and the Island Areas. MCDs are represented by several types of legal entities, such as townships, towns (in eight States), and districts.

Municipio—The primary legal subdivision of Puerto Rico (equivalent to county).

Overseas Counts—Counts of military and Federal civilian personnel stationed overseas with their dependents living with them.

Postcensal Estimates—Population estimates for the years following the last published decennial census. The Census Bureau uses existing data series, such as births, deaths, Federal tax returns, Medicare enrollment, immigration, and housing unit information, to update the decennial census counts during the estimating process. These estimates are used in Federal funding allocations, monitoring recent demographic trends, and benchmarking many Federally funded survey totals.

Public Law 94–171—The Federal law amending Section 141 of Title 13 that directs the Secretary of Commerce (who delegates that responsibility to the Director of the Census Bureau) to provide selected decennial census data tabulations to the States by April 1 of the year following the census. These tabulations are used by the States to redistrict areas used for elections such as congressional, legislative and school districts. In addition, the data are used for local redistricting such as the drawing of county council and city council districts.

State Designated Tribal Statistical Area (SDTSA)—A statistical entity delineated for an American Indian Tribe that does not have a land base (reservation) and is recognized as a Tribe by a State government, but not the Federal government. SDTSAs are identified and delineated for the Census Bureau by a liaison identified by a State's governor's office. SDTSAs generally encompasses a compact and contiguous area that contains a concentration of people who identify with a State recognized American Indian Tribe and in which there is structured or organized Tribal activity. SDTSAs may not be located in more than one State unless the Tribe is recognized by both State governments, and it may not include an area within an American Indian Reservation, off-reservation trust land, Oklahoma Tribal statistical area, Tribal designated statistical area, or Alaska Native village statistical area. SDTSAs were included with Tribal designated statistical areas for the 1990 Census; this designation was new for the 2000 Census.

State-Recognized American Indian Reservation—A type of legal geographic entity that is a recognized American Indian land area with a boundary established by final treaty, statute, executive order, and/or court order, and over which the Tribal government of a State-recognized American Indian Tribe has governmental authority. A governor appointed State liaison provides the name and boundary for each State recognized American Indian Reservation to the Census Bureau.

Summary File 1—A data file that presents decennial census counts and basic cross-tabulations of information collected from all people and housing units. This information includes age, sex, race, Hispanic or Latino origin, household relationship, and whether the residence is owned or rented. Data will be available at the block level, but limited to the 2010 Census tract level in cases where there are concerns with disclosure. The Census Bureau also will include summaries for other geographic areas, such as ZIP Code tabulation areas and Congressional Districts.

Exhibit—Additional Information

This section provides additional information about the 2010 Census CQR Program.

1. Where should a governmental unit submit a challenge for the 2010 Census CQR Program?

Governmental units challenging the completeness or accuracy of the 2010 Census counts need to submit their challenge in writing to: Count Question Resolution Program, Decennial Management Division, U.S. Census Bureau, Washington, DC 20233–0001. Governmental units can submit their challenge electronically to *dmd.cqr@census.gov*.

2. Will the Census Bureau make corrections to the census counts based on information submitted by governmental units?

The Census Bureau will make corrections if research indicates they are warranted. The Census Bureau will base its determination of whether a correction is necessary or not, on the quality and completeness of the information provided by State, local, or Tribal governmental unit representatives and the results of the Census Bureau's research of the census records. The Census Bureau will not incorporate the CQR corrections into 2010 data summary files and tables prepared after the CQR process begins nor will the Census Bureau retabulate Summary File 1 or Demographic Profile tables.

3. Which governmental units are eligible to submit CQR challenges and which entities are eligible to be challenged?

The Census Bureau will research and, if necessary, correct the counts for the following entities.

- States and statistically equivalent entities can submit challenges for their State or equivalent, plus any counties or equivalent entities, minor civil divisions, incorporated places (including consolidated cities), State designated Tribal statistical areas, State-recognized American Indian Reservations, Hawaiian homelands, and (in Hawaii and Puerto Rico only) for census designated places within their jurisdiction. Puerto Rico may also submit challenges for sub-minor civil divisions.
- Counties and statistically equivalent entities can submit challenges for their county or equivalent entity plus any minor civil divisions, incorporated places, and (in Hawaii and Puerto Rico only) Census Designated Places within their jurisdiction. Municipios in Puerto Rico may also submit challenges for subminor civil divisions.
- Actively functioning minor civil divisions can submit challenges for their minor civil division plus any incorporated place within their jurisdiction.
- Incorporated places (including consolidated cities) can submit challenges for their place.
- Federally-recognized American Indian Tribes can submit challenges for an American Indian Reservation or off-reservation trust lands, Tribal-designated statistical areas, and Oklahoma Tribal statistical areas plus any American Indian Tribal subdivisions within their jurisdiction.
- Alaska Native Regional Corporations can submit challenges for their regional corporation and for Alaska Native Village Statistical Areas (ANVSAs) within their jurisdiction.
- Alaska Native Village Statistical Areas can submit challenges for their ANVSA.

The Census Bureau will not accept challenges for any other types of statistical or legally defined areas.

4. Will the Census Bureau incorporate corrections from the CQR Program into the apportionment, redistricting data, or 2010 Census data products?

In accordance with the law, the apportionment counts are delivered to the President by December 31, 2010. The Census Bureau will not change the apportionment counts to reflect corrections resulting from the CQR Program.

The Census Bureau plans to begin delivery to the States on the counts

required for redistricting purposes in February 2011 and will complete this delivery by the statutory deadline of March 31, 2011. The Census Bureau will not change the data in these products to reflect the results of CQR challenges.

The Census Bureau will not incorporate CQR corrections into any 2010 Census data products. The planned CQR Program allows the Census Bureau to maintain consistency between data products while maintaining the schedule for timely release of the data. However, the Census Bureau will issue revised, certified population and housing unit counts for the affected governmental unit(s), maintain a list of CQR corrected geographic areas on the American Factfinder, and/or other Census Bureau URL locations, and will incorporate any corrections into its Postcensal Estimates Program beginning in December 2012.

Executive Orders

This notice has been determined to be not significant for purposes of Executive Order (E.O.) 12866. This program does not contain policies with federalism implications sufficient to warrant preparation of a federalism assessment under E.O. 13132.

Paperwork Reduction Act

Notwithstanding any other provision of law, no person is required to respond to, nor shall a person be subject to a penalty for failure to comply with, a collection of information subject to the requirements of the Paperwork Reduction Act (PRA), 44 U.S.C., Chapter 35, unless that collection of information displays a current valid OMB control number. In accordance with the PRA, OMB approved the CQR Program on February 22, 2011, under control number 0607–0879. The estimated burden hours are 7,800.

Dated: March 2, 2011.

Robert M. Groves,

Director, Bureau of the Census.

[FR Doc. 2011–5217 Filed 3–7–11; 8:45 am]

BILLING CODE 3510–07–P

DEPARTMENT OF COMMERCE

International Trade Administration

DEPARTMENT OF THE INTERIOR

Allocation of Duty-Exemptions for Calendar Year 2011 for Watch Producers Located in the United States Virgin Islands

AGENCY: Import Administration, International Trade Administration, Department of Commerce; Office of Insular Affairs, Department of the Interior.

ACTION: Notice.

SUMMARY: This action allocates calendar year 2011 duty exemptions for watch assembly producers ("program producers") located in the United States Virgin Islands ("USVI") pursuant to Public Law 97–446, as amended by Public Law 103–465, Public Law 106–36 and Public Law 108–429 ("the Act").

FOR FURTHER INFORMATION CONTACT: Supriya Kumar, Subsidies Enforcement Office; phone number: (202) 482–3530; fax number: (202) 501–7952; and e-mail address: *Supriya.Kumar@trade.gov.*

SUPPLEMENTARY INFORMATION: Pursuant to the Act, the Departments of the Interior and Commerce ("the Departments") share responsibility for the allocation of duty exemptions among program producers in the United States insular possessions and the Northern Mariana Islands. In accordance with Section 303.3(a) of the regulations (15 CFR 303.3(a)), the total quantity of duty-free insular watches and watch movements for calendar year 2011 is 1,866,000 units for the USVI. This amount was established in Changes in Watch, Watch Movement and Jewelry Program for the U.S. Insular Possessions, 65 FR 8048 (February 17, 2000). There are currently no program producers in Guam, American Samoa or the Northern Mariana Islands.

The criteria for the calculation of the calendar year 2011 duty-exemption allocations among program producers within a particular territory are set forth in Section 303.14 of the regulations (15 CFR 303.14). The Departments have verified and, where appropriate, adjusted the data submitted in application form ITA–334P by USVI program producers and have inspected these producers' operations in accordance with Section 303.5 of the regulations (15 CFR 303.5).

In calendar year 2010, USVI program producers shipped 63,990 watches and watch movements into the customs territory of the United States under the Act. The dollar amount of corporate income taxes paid by USVI program producers during calendar year 2010, and the creditable wages and benefits paid by these producers during calendar year 2010 to residents of the territory was a combined total of $1,214,003.

The calendar year 2011 USVI annual duty exemption allocations, based on the data verified by the Departments, are as follows:

Program producer	Annual allocation
Belair Quartz, Inc.	500,000

The balance of the units allocated to the USVI is available for new entrants into the program or existing program producers who request a supplement to their allocation.

Carole Showers,

Director, Office of Policy, Import Administration, International Trade Administration, Department of Commerce.

Dated: March 1, 2011.

Nikolao Pula,

Director of Office of Insular Affairs, Department of the Interior.

[FR Doc. 2011–5129 Filed 3–7–11; 8:45 am]

BILLING CODE 3510–DS–M; 4310–93–M

DEPARTMENT OF COMMERCE

International Trade Administration

[A–549–821]

Polyethylene Retail Carrier Bags From Thailand: Final Results of Antidumping Duty Administrative Review

AGENCY: Import Administration, International Trade Administration, Department of Commerce.

SUMMARY: On September 2, 2010, the Department of Commerce published the preliminary results of the 2008/2009 administrative review of the antidumping duty order on polyethylene retail carrier bags from Thailand. We gave interested parties an opportunity to comment on the preliminary results. Based on our analysis of the comments received and an examination of our calculations, we have made certain changes for the final results. The final weighted-average dumping margins for the respondents are listed below in the "Final Results of Review" section of this notice.

DATES: *Effective Date:* March 8, 2011.

FOR FURTHER INFORMATION CONTACT: Thomas Schauer or Richard Rimlinger, AD/CVD Operations, Office 5, Import Administration, International Trade Administration, U.S. Department of Commerce, 14th Street and Constitution Avenue, NW., Washington, DC 20230; telephone (202) 482–0410 or (202) 482–4477, respectively.

SUPPLEMENTARY INFORMATION:

Background

On September 2, 2010, the Department of Commerce (the Department) published *Polyethylene*

Retail Carrier Bags From Thailand: Preliminary Results of Antidumping Duty Administrative Review, 75 FR 53953 (September 2, 2010) (*Preliminary Results*), in the **Federal Register.** The administrative review covers C.P. Packaging Co., Ltd. (C.P. Packaging), Giant Pack Co., Ltd. (Giant), Sahachit Watana Plastics Ind. Co., Ltd. (Sahachit Watana), Thai Plastic Bags Industries Co., Ltd. (TPBI), and Thantawan Industry Public Co., Ltd. (Thantawan).[1] The Department has determined previously that TPBI, Apec Film Ltd., and Winner's Pack Co., Ltd., comprise the Thai Plastic Bags Group. See *Notice of Final Determination of Sales at Less Than Fair Value: Polyethylene Retail Carrier Bags From Thailand,* 69 FR 34122, 34123 (June 18, 2004). The period of review is August 1, 2008, through July 31, 2009.

We invited parties to comment on the *Preliminary Results.* On December 10, 2010, we received case briefs from the Polyethylene Retail Carrier Bag Committee and its individual members, Hilex Poly Co., LLC, and Superbag Corporation (collectively, the petitioners), and from TPBI. On December 15, 2010, we received rebuttal briefs from the petitioners and from TPBI. We did not hold a hearing as the only request for a hearing was withdrawn. See the petitioners' letter dated December 20, 2010.

We have conducted this review in accordance with section 751(a) of the Tariff Act of 1930, as amended (the Act).

Scope of the Order

The merchandise subject to the antidumping duty order is polyethylene retail carrier bags (PRCBs) which may be referred to as t-shirt sacks, merchandise bags, grocery bags, or checkout bags. The subject merchandise is defined as non-sealable sacks and bags with handles (including drawstrings), without zippers or integral extruded closures, with or without gussets, with or without printing, of polyethylene film having a thickness no greater than 0.035 inch (0.889 mm) and no less than 0.00035 inch (0.00889 mm), and with no length or width shorter than 6 inches (15.24 cm) or longer than 40 inches (101.6 cm). The depth of the bag may be shorter than 6 inches but not longer than 40 inches (101.6 cm).

PRCBs are typically provided without any consumer packaging and free of charge by retail establishments, *e.g.,* grocery, drug, convenience, department, specialty retail, discount stores, and restaurants, to their customers to package and carry their purchased products. The scope of the order excludes (1) polyethylene bags that are not printed with logos or store names and that are closeable with drawstrings made of polyethylene film and (2) polyethylene bags that are packed in consumer packaging with printing that refers to specific end-uses other than packaging and carrying merchandise from retail establishments, *e.g.,* garbage bags, lawn bags, trash-can liners.

Imports of the subject merchandise are currently classifiable under statistical category 3923.21.0085 of the Harmonized Tariff Schedule of the United States (HTSUS). Furthermore, although the HTSUS subheading is provided for convenience and customs purposes, the written description of the scope of the order is dispositive.

Analysis of Comments Received

All issues raised in the case briefs by parties to this review are addressed in the Issues and Decision Memorandum for the Antidumping Duty Administrative Review of Polyethylene Retail Carrier Bags From Thailand for the Period of Review August 31, 2008, through July 31, 2009 (Decision Memo), which is dated concurrently with this notice and hereby adopted by this notice. A list of the issues which parties have raised and to which we have responded is in the Decision Memo and attached to this notice as an Appendix. The Decision Memo, which is a public document, is on file in the Department's Central Records Unit (CRU) of the main Commerce building, Room 7046, and is accessible on the Web at *http://ia.ita.doc.gov/frn/index.html.* The paper copy and electronic version of the Decision Memo are identical in content.

Non-Selected Companies

As discussed in the *Preliminary Results,* 75 FR at 53954, we preliminarily determined to apply the weighted-average margin of TPBI, the sole remaining company as selected for individual examination, for the following companies: C.P. Packaging, Giant, Sahachit Watana, and Thantawan. We received no comments on the use of TPBI's rate. Therefore, for these final results of review, we have applied the rate we have calculated for TPBI to the companies named above which were not selected for individual examination.

Changes Since the Preliminary Results

We made the following changes to our calculation of TPBI's margin for the final results: (1) We revised our calculations of the cost of production and constructed value for TPBI to include exempted import duties, (2) we revised the general and administrative expenses of TPBI to include certain expenses, (3) we corrected a clerical error whereby we inadvertently used only 14 of the 15 physical characteristics in matching models across markets, and (4) we corrected a clerical error by using the correct quantity variable. See the memorandum to the file entitled "Polyethylene Retail Carrier Bags From Thailand—Thai Plastic Bags Industries Co., Ltd., Final Results Analysis Memorandum" dated concurrently with this notice for details regarding these changes.

Sales Below Cost in the Home Market

As explained in the *Preliminary Results,* 75 FR at 53954, in accordance with section 773(b) of the Act, the Department tested whether TPBI made sales at prices below the cost of production. For these final results of review and based on the statutory criteria concerning below-cost sales, the Department disregarded home-market sales by TPBI that failed the cost-of-production test.

Final Results of Review

As a result of our review, we determine that the following percentage weighted-average dumping margins exist for PRCBs from Thailand for the period August 1, 2008, through July 31, 2009:

Producer/Exporter	Percent margin
TPBI	20.15
C.P. Packaging Co., Ltd.	20.15
Giant Pack Co., Ltd.	20.15
Sahachit Watana Plastics Ind. Co., Ltd.	20.15
Thantawan Industry Public Co., Ltd.	20.15

Assessment Rates

The Department shall determine, and U.S. Customs and Border Protection (CBP) shall assess, antidumping duties on all appropriate entries.

We calculated importer/customer-specific duty-assessment amounts with respect to export-price sales by TPBI in the following manner. We divided the total dumping margins (calculated as the difference between normal value and the export price) for each importer or customer by the total number of kilograms TPBI sold to that importer or

[1] We had originally selected Landblue (Thailand) Co., Ltd. (Landblue), and TPBI for individual examination in this review (see Memorandum to Laurie Parkhill dated October 15, 2009), but subsequently we rescinded the review in part with respect to Landblue. See *Polyethylene Retail Carrier Bags From Thailand: Rescission of Antidumping Duty Administrative Review in Part,* 75 FR 34699 (June 18, 2010).

customer. We will direct CBP to assess the resulting per-kilogram dollar amount against each kilogram of merchandise on each of that importer's or customer's entries during the period of review. See 19 CFR 351.212(b)(1).

The Department clarified its "automatic assessment" regulation on May 6, 2003. This clarification will apply to entries of subject merchandise during the period of review produced by TPBI for which it did not know that the merchandise it sold to an intermediary (*e.g.,* a reseller, trading company, or exporter) was destined for the United States. In such instances, we will instruct CBP to liquidate unreviewed entries at the all-others rate if there is no rate for the intermediary(ies) involved in the transaction. *See Antidumping and Countervailing Duty Proceedings: Assessment of Antidumping Duties*, 68 FR 23954 (May 6, 2003).

For the companies which were not selected for individual examination, we will instruct CBP to apply the rates listed above to all entries of subject merchandise produced and/or exported by such firms.

We intend to issue liquidation instructions to CBP 15 days after publication of these final results of review.

Cash-Deposit Requirements

The following deposit requirements will be effective upon publication of this notice of final results of administrative review for all shipments of the subject merchandise entered, or withdrawn from warehouse, for consumption on or after the date of publication, consistent with section 751(a)(1) of the Act: (1) The cash-deposit rates for the reviewed companies will be the rates shown above; (2) for previously investigated or reviewed companies not listed above, the cash-deposit rate will continue to be the company-specific rate published for the most recent period; (3) if the exporter is not a firm covered in this or a previous review or the original less-than-fair-value (LTFV) investigation but the manufacturer is, the cash-deposit rate will be the rate established for the most recent period for the manufacturer of the merchandise; (4) the cash-deposit rate for all other manufacturers or exporters will be 4.69 percent, the all-others rate from the amended final determination of the LTFV investigation as revised as a result of the Section 129 determination published on August 12, 2010. See *Notice of Implementation of Determination Under Section 129 of the Uruguay Round Agreements Act and Partial Revocation of the Antidumping Duty Order on Polyethylene Retail Carrier Bags From Thailand,* 75 FR 48940 (August 12, 2010).

These deposit requirements shall remain in effect until further notice.

Notification Requirements

This notice serves as a reminder to importers of their responsibility under 19 CFR 351.402(f) to file a certificate regarding the reimbursement of antidumping duties prior to liquidation of the relevant entries during this review period. Failure to comply with this requirement could result in the Department's presumption that reimbursement of antidumping duties occurred and the subsequent assessment of doubled antidumping duties. See *Id.*

This notice also serves as a reminder to parties subject to administrative protective order (APO) of their responsibility concerning the disposition of proprietary information disclosed under APO in accordance with 19 CFR 351.305(a)(3). Timely notification of the destruction of APO materials or conversion to judicial protective order is hereby requested. Failure to comply with the regulations and the terms of an APO is a sanctionable violation.

We are issuing and publishing these results in accordance with sections 751(a)(1) and 777(i) of the Act and 19 CFR 351.221(b)(5).

Dated: March 1, 2011.

Ronald K. Lorentzen,

Deputy Assistant Secretary for Import Administration.

Appendix

1. Conversion-Cost Reallocation.
2. Affiliated-Party Inputs.
3. Blue Corner Rebates.
4. Zeroing.
5. Duties in Cost of Production and Constructed Value.
6. General and Administrative Expenses.
7. Ministerial Errors and Other Issues.

[FR Doc. 2011–5267 Filed 3–7–11; 8:45 am]

BILLING CODE 3510–DS–P

DEPARTMENT OF COMMERCE

International Trade Administration

[C–533–818; C–560–806; C–475–827; C–580–837]

Certain Cut-to-Length Carbon-Quality Steel Plate From India, Indonesia, Italy, and the Republic of Korea: Final Results of Expedited Sunset Review

AGENCY: Import Administration, International Trade Administration, Department of Commerce.

SUMMARY: On November 1, 2010, the Department of Commerce ("the Department") initiated the second sunset reviews of the countervailing duty ("CVD") orders on certain cut-to-length carbon-quality steel plate from India, Indonesia, Italy, and the Republic of Korea ("Korea") pursuant to section 751(c) of the Tariff Act of 1930, as amended ("the Act"). On the basis of notices of intent to participate and adequate substantive responses filed on behalf of the domestic interested parties and inadequate response from respondent interested parties (in these cases, no response), the Department conducted expedited sunset reviews of these CVD orders pursuant to section 751(c)(3)(B) of the Act and 19 CFR 351.218(e)(1)(ii)(B). As a result of these sunset reviews, the Department finds that revocation of the CVD orders would be likely to lead to continuation or recurrence of a countervailable subsidy at the level indicated in the "Final Results of Reviews" section of this notice.

DATES: *Effective Date:* March 8, 2011.

FOR FURTHER INFORMATION CONTACT: Eric Greynolds, AD/CVD Operations, Office 3, Import Administration, International Trade Administration, U.S. Department of Commerce, 14th Street and Constitution Avenue, NW., Washington, DC 20230; telephone: (202) 482–6071.

SUPPLEMENTARY INFORMATION:

Background

On November 1, 2010, the Department initiated a sunset review of the CVD orders on certain cut-to-length carbon-quality steel plate from India, Indonesia, Italy, and Korea pursuant to section 751(c) of the Act. *See Initiation of Five-Year ("Sunset") Review,* 75 FR 67082 (November 1, 2010). The Department received a notice of intent to participate in each of these reviews from the following domestic interested parties: Nucor Corporation, ArcelorMittal USA, Evraz NA Claymont, Evraz NA Oregon Steel Mills, and SSAB N.A.D. (collectively, "domestic interested parties") within the deadline specified in 19 CFR 351.218(d)(1)(i). The domestic interested parties claimed interested party status under section 771(9)(C) of the Act.

The Department received adequate substantive responses collectively from the domestic interested parties within the 30-day deadline specified in 19 CFR 351.218(d)(3)(i). However, the Department did not receive a substantive response from any government or respondent interested party to these proceedings. As a result, pursuant to section 751(c)(3)(B) of the Act and 19 CFR 351.218(e)(1)(ii)(C)(2),

the Department conducted expedited reviews of these CVD orders.

Scope of the Orders

The products covered by the countervailing duty orders are certain hot-rolled carbon-quality steel: (1) Universal mill plates (*i.e.,* flat-rolled products rolled on four faces or in a closed box pass, of a width exceeding 150 mm but not exceeding 1250 mm, and of a nominal or actual thickness of not less than 4 mm, which are cut-to-length (not in coils) and without patterns in relief), of iron or non-alloy-quality steel; and (2) flat-rolled products, hot-rolled, of a nominal or actual thickness of 4.75 mm or more and of a width which exceeds 150 mm and measures at least twice the thickness, and which are cut-to-length (not in coils).

Steel products to be included in the scope are of rectangular, square, circular or other shape and of rectangular or non-rectangular cross-section where such non-rectangular cross-section is achieved subsequent to the rolling process (*i.e.,* products which have been "worked after rolling")—for example, products which have been beveled or rounded at the edges. Steel products that meet the noted physical characteristics that are painted, varnished or coated with plastic or other non-metallic substances are included within the scope. Also, specifically included in the scope are high strength, low alloy ("HSLA") steels. HSLA steels are recognized as steels with micro-alloying levels of elements such as chromium, copper, niobium, titanium, vanadium, and molybdenum.

Steel products to be included in the scope, regardless of Harmonized Tariff Schedule of the United States ("HTSUS") definitions, are products in which: (1) Iron predominates, by weight, over each of the other contained elements, (2) the carbon content is two percent or less, by weight, and (3) none of the elements listed below is equal to or exceeds the quantity, by weight, respectively indicated: 1.80 percent of manganese, or 1.50 percent of silicon, or 1.00 percent of copper, or 0.50 percent of aluminum, or 1.25 percent of chromium, or 0.30 percent of cobalt, or 0.40 percent of lead, or 1.25 percent of nickel, or 0.30 percent of tungsten, or 0.10 percent of molybdenum, or 0.10 percent of niobium, or 0.41 percent of titanium, or 0.15 percent of vanadium, or 0.15 percent zirconium. All products that meet the written physical description, and in which the chemistry quantities do not equal or exceed any one of the levels listed above, are within the scope unless otherwise specifically excluded. The following products are specifically excluded from the orders: (1) Products clad, plated, or coated with metal, whether or not painted, varnished or coated with plastic or other non-metallic substances; (2) SAE grades (formerly AISI grades) of series 2300 and above; (3) products made to ASTM A710 and A736 or their proprietary equivalents; (4) abrasion-resistant steels (*i.e.,* USS AR 400, USS AR 500); (5) products made to ASTM A202, A225, A514 grade S, A517 grade S, or their proprietary equivalents; (6) ball bearing steels; (7) tool steels; and (8) silicon manganese steel or silicon electric steel. The merchandise subject to the orders is currently classifiable in the HTSUS under subheadings: 7208.40.3030, 7208.40.3060, 7208.51.0030, 7208.51.0045, 7208.51.0060, 7208.52.0000, 7208.53.0000, 7208.90.0000, 7210.70.3000, 7210.90.9000, 7211.13.0000, 7211.14.0030, 7211.14.0045, 7211.90.0000, 7212.40.1000, 7212.40.5000, 7212.50.0000, 7225.40.3050, 7225.40.7000, 7225.50.6000, 7225.99.0090, 7226.91.5000, 7226.91.7000, 7226.91.8000, 7226.99.0000.

Although the HTSUS subheadings are provided for convenience and customs purposes, the written description of the merchandise subject to the orders is dispositive.

Analysis of Comments Received

All issues raised in these reviews are addressed in the Issues and Decision Memorandum ("Decision Memorandum") from Gary Taverman, Acting Deputy Assistant Secretary for Antidumping and Countervailing Duty Operations, to Ronald K. Lorentzen, Deputy Assistant Secretary for Import Administration, dated concurrent with and hereby adopted by this notice. Parties can find a complete discussion of all issues raised in this review and the corresponding recommendation in this public memorandum which is on file in the Central Records Unit, room 7046 of the main Commerce building. In addition, a complete version of the Decision Memorandum can be accessed directly on the Web at *http://ia.ita.doc.gov/frn.* The paper copy and electronic version of the Decision Memorandum are identical in content.

Final Results of Reviews

The Department determines that revocation of the CVD orders would be likely to lead to continuation or recurrence of a countervailable subsidy at the rates listed below:

Producers/Exporters	Net counter vailable subsidy (percent)
India:	
Steel Authority of India ("SAIL")	12.82
All other producers/manufacturers/exporters	12.82
Indonesia:	
P.T. Krakatau Steel	47.71
All Others [1]	15.90
Italy:	
ILVA S.p.A.	2.38
All Others [2]	2.38
Korea:	
Dongkuk Steel Mill, Ltd.	1.38
All others [3]	1.38

[1] P.T. Gunawan Steel and P.T. Jaya Pari were excluded from the order on the basis of a *de minimis* net subsidy. *See Notice of Amended Final Determinations: Certain Cut-To-Length Carbon-Quality Steel Plate From India and the Republic of Korea; and Notice of Countervailing Duty Orders: Certain Cut-To-Length Carbon-Quality Steel Plate From France, India, Indonesia, Italy, and the Republic of Korea,* 65 FR 6587 (February 10, 2000) ("*CVD Order*").

[2] Palini & Bertol were excluded from the order on the basis of a *de minimis* net subsidy. *See CVD Order.*

[3] Pohang Iron & Steel Co., Ltd. was excluded from the order on the basis of a *de minimis* net subsidy. *See CVD Order.*

Notification Regarding Administrative Protective Order

This notice serves as the only reminder to parties subject to administrative protective order ("APO") of their responsibility concerning the return or destruction of proprietary information disclosed under APO in accordance with 19 CFR 351.305. Timely notification of return/destruction of APO materials or conversion to judicial protective order is hereby requested. Failure to comply with the regulations and the terms of an APO is a sanctionable violation.

We are issuing and publishing the results and notice in accordance with sections 751(c), 752, and 777(i)(1) of the Act.

Dated: March 1, 2011.

Ronald K. Lorentzen,

Deputy Assistant Secretary for Import Administration.

[FR Doc. 2011–5220 Filed 3–7–11; 8:45 am]

BILLING CODE 3510–DS–P

DEPARTMENT OF COMMERCE

International Trade Administration

[A–570–851]

Certain Preserved Mushrooms From the People's Republic of China: Preliminary Results of Antidumping Duty Administrative Review, Rescission in Part, and Intent To Rescind in Part

AGENCY: Import Administration, International Trade Administration, Department of Commerce.

DATES: *Effective Date:* March 8, 2011.

SUMMARY: The Department of Commerce (the Department) is currently conducting an administrative review of the antidumping duty order on certain preserved mushrooms from the People's Republic of China (PRC) covering the period February 1, 2009, through January 31, 2010. We preliminarily determine that sales made by Blue Field (Sichuan) Food Industrial Co., Ltd. (Blue Field), Guangxi Jisheng Foods, Inc. (Jisheng), and Xiamen International Trade & Industrial Co., Ltd. (XITIC) were made below normal value (NV). We invite interested parties to comment on these preliminary results. In addition, we are also rescinding this administrative review with respect to Zhangzhou Gangchang Canned Foods Co., Ltd. (Gangchang), Shandong Fengyu Edible Fungus Corporation Ltd. (Fengyu), and Zhangzhou Tongfa Foods Industry Co., Ltd. (Tongfa). Additionally, we are announcing that we intend to rescind this review with respect to five companies which we have preliminarily determined had no shipments during the period of review (POR).

FOR FURTHER INFORMATION CONTACT: Fred Baker, Scott Hoefke, or Robert James, AD/CVD Operations, Office 7, Import Administration, International Trade Administration, U.S. Department of Commerce, 14th Street and Constitution Avenue, NW., Washington, DC 20230; *telephone:* (202) 482–2924, (202) 482–4947 or (202) 482–0649, respectively.

SUPPLEMENTARY INFORMATION:

Background

On February 19, 1999, the Department published in the **Federal Register** the antidumping duty order on certain preserved mushrooms (mushrooms) from the PRC. *See Notice of Amendment of Final Determination of Sales at Less Than Fair Value and Antidumping Duty Order: Certain Preserved Mushrooms From the People's Republic of China,* 64 FR 8308 (February 19, 1999) (the Order). On February 1, 2010, the Department published in the **Federal Register** its notice of opportunity to request an administrative review of the antidumping duty order on mushrooms from the PRC. *See Antidumping or Countervailing Duty Order, Finding, or Suspended Investigation; Opportunity to Request Administrative Review,* 75 FR 5037 (February 1, 2010). On March 1, 2010, Monterrey Mushrooms (Petitioner) requested the Department conduct an administrative review of 26 PRC mushroom producers/exporters. On March 30, 2010, the Department published in the **Federal Register** a notice of initiation of the antidumping duty administrative review of mushrooms from the PRC for the period February 1, 2009, through January 31, 2010, with respect to the 26 companies. *See Initiation of Antidumping and Countervailing Duty Administrative Reviews and Request for Revocation in Part,* 75 FR 15679 (March 30, 2010) (*Initiation Notice*).

On April 9, 2010, we received a no-shipment certification from Dujianghyan Xingda Foodstuff Co., Ltd. (Xingda). On April 27, 2010, we received no-shipment certifications from Fujian Pinghe Baofeng Canned Foods, Longhai Guangfa Food Co., Ltd., Fujian Zishan Group Co., Ltd., and Xiamen Longhuai Import & Export Co., Ltd.

On April 26, 2010, we received separate rate certifications from Fujian Golden Banyan Foodstuffs Industrial Co., Ltd. (Golden Banyan) [1] and Blue Field. On April 28, 2010, we received separate rate certifications from Ayecue (Liaocheng) Foodstuff Co., Ltd. (Ayecue), and Shandong Jiufa Edible Fungus Corporation, Ltd. (Jiufa). On April 29, 2010, we received separate rate certifications from Zhejiang Iceman Group Co., Ltd. (Iceman), Gangchang, and XITIC.

On June 28, 2010 Petitioner withdrew its request for an administrative review of Gangchang.

Respondent Selection

Section 777A(c)(1) of the Tariff Act of 1930, as amended (the Act), directs the Department to calculate individual dumping margins for each known exporter or producer of the subject merchandise. However, section 777A(c)(2) of the Act gives the Department discretion to limit its examination to a reasonable number of exporters or producers if it is not practicable to examine all exporters or producers involved in the review.

On April 2, 2010, the Department released U.S. Customs and Border Protection (CBP) data for entries of the subject merchandise during the POR under administrative protective order (APO) to all interested parties having an APO, inviting comments regarding the CBP data and respondent selection. The Department received comments from Blue Field on April 12, 2010, and from Petitioner and XITIC on April 14, 2010.

Based on the large number of potential exporters or producers involved in this administrative review and, after considering our resources, we determined that it was not practicable to individually examine all twenty-six companies. Accordingly, on May 17, 2010, we issued our respondent selection memorandum indicating that, pursuant to section 777A(c)(2)(B) of the Act, we could reasonably examine only the three largest producers/exporters of subject merchandise by volume. Therefore, we selected Blue Field, Jisheng, and XITIC as mandatory respondents.[2] The following day we issued the standard antidumping questionnaire to those three respondents, and received the responses in June and July 2010. We issued supplemental questionnaires to Blue Field, Jisheng, and XITIC in the ensuing months, and received their responses in August, September, October, and November 2010, and January 2011.

Surrogate Country and Surrogate Value Data

On July 13, 2010, the Department sent interested parties a letter inviting comments on surrogate country selection and surrogate value data. We received a response from Jisheng on November 16, 2010, and from Petitioner and XITIC on November 22, 2010. Petitioner argued that India is the appropriate surrogate country for this review, and submitted information with which to value the factors of production (FOPs). Jisheng and XITIC made no comments regarding surrogate country

[1] In the initiation notice we initiated reviews of, *inter alia,* Fujian Golden Banyan Foodstuffs Co., Ltd., Golden Banyan Foodstuffs, Co., Ltd., and Zhangzhou Golden Banyan Foodstuffs Industrial Co., Ltd. *See Initiation Notice* 75 FR at 15681. However, Golden Banyan, in response to a questionnaire from the Department, placed on the record information regarding its name, its past name changes, and the addresses of its affiliates. Based on this information, we determine that these three entities are actually all the same. *See* petitioners' March 1, 2010 submission at Attachment, and Golden Banyan's January 20, 2011 submission.

[2] *See* Memorandum to Richard Weible, Director, AD/CVD Operations, Office 7, from Scott Hoefke and Fred Baker, Analysts, AD/CVD Operations, Office 7, Subject: "Administrative Review of the Antidumping Duty Order on Certain Preserved Mushrooms from the People's Republic of China: Respondent Selection Memorandum, " dated May 17, 2010.

selection, but they had obtained all of the potential surrogate value data they placed on the record from sources in India.

Partial Rescission

Section 351.213(d)(1) of the Department's regulations provide that the Department will rescind an administrative review if the party that requested the review withdraws its request for review within 90 days of the date of publication of the notice of initiation of the requested review, or withdraws it at a later date if the Department determines it is reasonable to extend the time limit for withdrawing the request. The Department initiated this administrative review on March 30, 2010. *See Initiation Notice.* As indicated above, Petitioner withdrew its request for review of Gangchang on June 28, 2010. Because the party that requested this review has timely withdrawn the request for review, we are rescinding this review with respect to Gangchang.

Furthermore, concurrent with this administrative review we are conducting new shipper reviews of Fengyu and Tongfa,[3] both of which are companies on whom we initiated an administrative review in this proceeding. *See Initiation Notice.* Therefore, since we are conducting new shipper reviews of these companies for the period covered by this administrative review, we are rescinding their administrative review pursuant to 19 CFR 351.214(j).

Intent To Rescind Review in Part

In April 2010 we received certifications of no shipments from five companies for whom we initiated a review in this proceeding. Those five companies were Dujianghyan Xingda Foodstuff Co., Fujian Pinghe Baofeng Canned Foods, Fujian Zishan Group Co., Ltd., Longhai Guangfa Food Co., and Xiamen Longhuai Import & Export Co. We made inquiries with CBP as to whether any shipments were entered with respect to these five companies during the POR. *See* CBP message numbers 0347302, 0347303, 0347304, 0347305, and 0347306, all dated December 13, 2010. We received no responses from CBP to those inquiries. We also examined CBP information used in the selection of the mandatory respondents to further confirm no shipments by these companies during the POR. *See* the attachment to "Letter from Robert James to All Interested Parties" dated April 2, 2010. Based on the above, we preliminarily find that these five companies had no shipments of subject merchandise during the POR, and we intend to rescind their reviews pursuant to 19 CFR 351.213(d)(3).

Interested parties may submit comments on the Department's intent to rescind with respect to these five companies no later than 30 days after the date of publication of these preliminary results of review. The Department will issue the final rescission (if appropriate), which will include the results of its analysis of issues raised in any comments received, in the final results of review.

Scope of the Order

The products covered by this order are certain preserved mushrooms, whether imported whole, sliced, diced, or as stems and pieces. The certain preserved mushrooms covered under this order are the species *Agaricus bisporus* and *Agaricus bitorquis.* "Certain Preserved Mushrooms" refers to mushrooms that have been prepared or preserved by cleaning, blanching, and sometimes slicing or cutting. These mushrooms are then packed and heated in containers including, but not limited to, cans or glass jars in a suitable liquid medium, including, but not limited to, water, brine, butter or butter sauce. Certain preserved mushrooms may be imported whole, sliced, diced, or as stems and pieces. Included within the scope of this order are "brined" mushrooms, which are presalted and packed in a heavy salt solution to provisionally preserve them for further processing.[4]

Excluded from the scope of this order are the following: (1) All other species of mushroom, including straw mushrooms; (2) all fresh and chilled mushrooms, including "refrigerated" or "quick blanched mushrooms;" (3) dried mushrooms; (4) frozen mushrooms; and (5) "marinated," "acidified," or "pickled" mushrooms, which are prepared or preserved by means of vinegar or acetic acid, but may contain oil or other additives.

The merchandise subject to this order is classifiable under subheadings: 2003.10.0127, 2003.10.0131, 2003.10.0137, 2003.10.0143, 2003.10.0147, 2003.10.0153, and 0711.51.0000 of the Harmonized Tariff Schedule of the United States (HTSUS). Although the HTSUS subheadings are provided for convenience and Customs purposes, the written description of the scope of this order is dispositive.

Non-Market Economy Country Status

In every case conducted by the Department involving the PRC, we have treated the PRC as a non-market economy (NME) country. *See, e.g., Pure Magnesium from the People's Republic of China: Final Results of Antidumping Duty Administrative Review,* 73 FR 76336 (December 16, 2008); and *Frontseating Service Valves from the People's Republic of China: Final Determination of Sales at Less Than Fair Value and Final Negative Determination of Critical Circumstances,* 74 FR 10886 (March 12, 2009). In accordance with section 771(18)(C)(i) of the Act, any determination that a foreign country is an NME country shall remain in effect until revoked by the Department. *See, e.g., Brake Rotors From the People's Republic of China: Final Results and Partial Rescission of the 2004/2005 Administrative Review and Notice of Rescission of 2004/2005 New Shipper Review,* 71 FR 66304 (November 14, 2006). None of the parties to this proceeding have contested such treatment, or provided record evidence to reconsider our continued treatment of the PRC as an NME. Accordingly, we calculated NV in accordance with section 773(c) of the Act, which applies to NME countries.

Separate Rates Determination

A designation of a country as an NME remains in effect until it is revoked by the Department. *See* section 771(18)(C) of the Act. Accordingly, the Department begins its separate rate analysis with a rebuttable presumption that all companies within the PRC are subject to government control, and thus should be assessed a single antidumping duty rate (*i.e.,* the PRC-wide rate).

It is the Department's policy to assign all exporters of the merchandise subject to review in NME countries a single rate unless an exporter can affirmatively demonstrate an absence of government control, both in law (*de jure*) and in fact (*de facto*), with respect to exports. To establish whether a company is sufficiently independent to be entitled to a separate, company-specific rate, the Department analyzes each exporting entity in an NME country under the test established in the *Final Determination of Sales at Less than Fair Value:*

[3] *See Certain Preserved Mushrooms From the People's Republic of China: Preliminary Results of Antidumping Duty New Shipper Reviews,* 75 FR 66729 (October 29, 2010).

[4] On June 19, 2000, the Department affirmed that "marinated," "acidified," or "pickled" mushrooms containing less than 0.5 percent acetic acid are within the scope of the antidumping duty order. *See* Recommendation Memorandum—Final Ruling of Request by Tak Fat, *et al.* for Exclusion of Certain Marinated, Acidified Mushrooms from the Scope of the Antidumping Duty Order on Certain Preserved Mushrooms from the People's Republic of China," dated June 19, 2000. On February 9, 2005, the United States Court of Appeals for the Federal Circuit upheld this decision. *See Tak Fat* v. *United States,* 396 F.3d 1378 (Fed. Cir. 2005).

Sparklers from the People's Republic of China, 56 FR 20588 (May 6, 1991), (*Sparklers*) as amplified by the *Notice of Final Determination of Sales at Less Than Fair Value: Silicon Carbide from the People's Republic of China,* 59 FR 22585 (May 2, 1994) (*Silicon Carbide*).

In the *Initiation Notice* the Department stated that all firms that wish to qualify for separate-rate status in the administrative reviews involving NME countries must complete, as appropriate, either a separate-rate application or certification. *See Initiation Notice,* 75 FR at 15680. To establish separate-rate eligibility, the Department requires entities for which a review was requested, that were assigned a separate rate in the most recent segment of the proceeding in which they participated, to certify that they continue to meet the criteria for obtaining a separate rate. In this administrative review, Ayecue, Gangchang, Golden Banyan, Iceman, and Jiufa (the separate-rate applicants) each submitted a separate-rate certification indicating they continued to meet the criteria for obtaining a separate rate. Although Jisheng did not submit a separate-rate certification, as a cooperating mandatory respondent it did answer all the separate-rate questions in our questionnaires. Additionally, Blue Field and XITIC both submitted a separate-rate certification and answered all the separate-rate questions in our questionnaires. As such, we have determined that Blue Field, Jisheng, XITIC, and the separate-rate applicants each provided company-specific information, and each stated that it met the criteria for the assignment of a separate rate.

The Department's separate-rate test to determine whether the exporter is independent from government control does not consider, in general, macroeconomic/border-type controls (*e.g.,* export licenses, quotas, and minimum export prices), particularly if these controls are imposed to prevent dumping. The test focuses, rather, on controls over the investment, pricing, and output decision-making process at the individual firm level. *See Notice of Final Determination of Sales at Less Than Fair Value: Certain Cut-to-Length Carbon Steel Plate From Ukraine,* 62 FR 61754, 61758 (November 19, 1997), and *Tapered Roller Bearings and Parts Thereof, finished and Unfinished, From the People's Republic of China; Final Results of Antidumping Administrative Review,* 62 FR 61276, 61279 (November 17, 1997).

Absence of De Jure Control

The Department considers the following *de jure* criteria in determining whether an individual company may be granted a separate rate: (1) An absence of restrictive stipulations associated with the individual exporter's business and export licenses; (2) any legislative enactments decentralizing control of companies; and (3) any other formal measures by the government decentralizing control of companies. *See Sparklers,* 56 FR at 20589.

In this administrative review, Blue Field, Jisheng, and XITIC demonstrated, and the separate-rate applicants certified that, consistent with the most recent segment of this proceeding in which it participated and was granted a separate rate, there is an absence of *de jure* government control of its exports.[5] Each of the separate-rate applicants certified to its separate-rate status. Additionally, Blue Field, Jisheng, XITIC, and the separate-rate applicants stated that their companies had no relationship with any level of the PRC government with respect to ownership, internal management, and business operations. In this segment we have no new information on the record that would cause us to reconsider our previous determinations of the absence of *de jure* government control with regard to these companies. Thus, we find that evidence on the record supports a preliminary finding of an absence of *de jure* government control with regard to the export activities of Blue Field, Jisheng, XITIC, and the separate-rate applicants.

Absence of De Facto Control

As stated in previous cases, there is some evidence that certain enactments of the PRC central government have not been implemented uniformly among different sectors and/or jurisdictions in the PRC. *See Silicon Carbide,* 59 FR at 22586–87 and *Notice of Final Determination of Sales at Less Than Fair Value: Certain Preserved Mushrooms from the People's Republic of China,* 63 FR 72255 (December 31, 1998). Therefore, the Department has determined that an analysis of *de facto* control is critical in determining whether the respondents are, in fact, subject to a degree of government control which would preclude the Department from assigning separate rates.

The Department typically considers the following four factors in evaluating whether a respondent is subject to *de facto* government control over its export functions: (1) Whether the export prices are set by, or subject to the approval of, a government agency; (2) whether the respondent retains the proceeds from its export sales and makes independent decisions regarding the disposition of profits or financing of losses; (3) whether the respondent has the authority to negotiate and sign contracts and other agreements; (4) whether the respondent has autonomy from the government regarding the selection of management. *See Silicon Carbide,* 59 FR at 22587; *Sparklers,* 56 FR at 20589; and *Final Determination of Sales at Less Than Fair Value: Furfuryl Alcohol From the People's Republic of China,* 60 FR 22544, 22545 (May 8, 1995).

The evidence provided by Blue Field, Jisheng, XITIC, and the separate-rate applicants supports a preliminary finding of absence of *de facto* government control based on the following: (1) The companies set their own export prices independent of the government and without the approval of a government authority; (2) there is no restriction on any of the companies' use of export revenue, nor the disposition of profits or financing of losses; (3) the companies have authority to negotiate and sign contracts and other agreements; (4) the companies have autonomy from the government in making decisions regarding the selection of management. *See, e.g.,* Blue Field's June 22, 2010, Section A response at A–1 through A–8; Jisheng's June 23, 2010, Section A response at A–1 through A–8; and XITIC's June 16,

[5] The most recently completed segment of this proceeding in which Golden Banyan participated and was granted separate rate status was *Certain Preserved Mushrooms from the People's Republic of China: Final Results of Antidumping Duty New Shipper Review,* 73 FR 75083 (December 10, 2008). The most recently completed segment of this proceeding in which Gangchang and Iceman participated and were granted separate rate status was *Certain Preserved Mushrooms from the People's Republic of China: Final Results of Antidumping Duty New Shipper Reviews,* 74 FR 28882 (June 18, 2009). The most recently completed segment of this proceeding in which Ayecue participated and was granted separate rate status was *Certain Preserved Mushrooms from the People's Republic of China: Final Results of Antidumping Duty New Shipper Review,* 73 FR 21904 (April 23, 2008). The most recently completed segment of this proceeding in which Blue Field participated and was granted separate rate status was *Certain Preserved Mushrooms from the People's Republic of China: Notice of Final Results of the Eighth New Shipper Review,* 70 FR 60789 (October 19, 2005). The most recently completed segment of this proceeding in which Jiufa and XITIC participated and were granted separate rate status was *Notice of Amended Final Results of Antidumping duty Administrative Review: Certain Preserved Mushrooms from the People's Republic of China,* 70 FR 60280 (October 17, 2005). The most recently completed segment of this proceeding in which Jisheng participated and was granted separate rate status was *Certain Preserved Mushrooms From the People's Republic of China: Final Results of the Tenth Antidumping Duty New Shipper Review,* 72 FR 68858 (December 6, 2007).

2010, Section A response at A–2 through A–9. Additionally, in this administrative review we have no new information on the record that would cause us to reconsider our previous determinations of the absence of *de facto* government control with regard to these companies. Therefore, the Department preliminarily finds that Blue Field, Jisheng, XITIC and the separate-rate applicants have established that they qualify for separate rates under the criteria established by *Silicon Carbide* and *Sparklers.*

The PRC-Wide Entity

In addition to the separate-rate applications discussed above, seven other companies for which we initiated a review in this proceeding already had separate rates.[6] However, they failed to recertify their separate rates using the separate rate certification provided at the Department's Web site at *http://ia.ita.doc.gov/nme/nme-sep-rate.html*, to demonstrate their continued eligibility for separate rate status. *See Initiation Notice,* at 15680. These seven companies also did not make a claim that they had not sold or shipped subject merchandise to the United States during the POR. In accordance with the Department's established NME methodology, a party's separate rate status must be established in each segment of the proceeding in which the party is involved.[7] Therefore, because these companies did not certify that they had no shipments or demonstrate that they were entitled to a separate rate, the Department preliminarily finds that each company should be considered part of the PRC-wide entity for this review.

Furthermore, there are two companies, Sun Wave Trading Co., Ltd. and Xiamen Greenland Import & Export Co., Ltd., for which we initiated a review in this proceeding and which did not previously have a separate rate. Because these companies did not file a Separate Rate Application, *see generally, Initiation Notice,* 75 FR at 15680, to demonstrate eligibility for a separate rate in this administrative review, or certify that they had no shipments, we preliminarily determine that these companies will remain part of the PRC-wide entity.

Surrogate Country

When the Department is investigating imports from an NME country, section 773(c)(1) of the Act directs it to base NV, in most circumstances, on the NME producer's FOPs, valued in a surrogate market economy country or countries considered to be appropriate by the Department. In accordance with section 773(c)(4) of the Act, in valuing the FOPs, the Department shall utilize, to the extent possible, the prices or costs of FOPs in one or more market economy countries that are: (1) At a level of economic development comparable to that of the NME country; and (2) significant producers of comparable merchandise.

The Department determined that India, the Philippines, Indonesia, Thailand, Ukraine, and Peru are countries comparable to the PRC in terms of economic development and that these six countries are significant producers of comparable merchandise.[8] Moreover, it is the Department's practice to select an appropriate surrogate country based on the availability and reliability of data from the countries. *See* Department Policy Bulletin No. 04.1: Non-Market Economy Surrogate Country Selection Process (March 1, 2004) (Surrogate Country Policy Bulletin). In the most recently completed proceeding involving the Order, we determined that India is comparable to the PRC in terms of economic development and has surrogate value data that are available and reliable. *See Certain Preserved Mushrooms From the People's Republic of China: Final Results of Antidumping Duty New Shipper Review,* 74 FR 65520, (December 10, 2009). In the current proceeding, all parties who submitted factor values were in agreement that India was the appropriate surrogate country. We find based on the record of this administrative review that India is an appropriate surrogate country. We have selected India as the primary surrogate market-economy country because it is at a level of economic development similar to the PRC, it is a significant producer of comparable merchandise, and we have reliable, publicly available data from India representing broad market averages. *See* 773(c)(4) of the Act; *see also* Memorandum to the File, from Fred Baker, Analyst, Subject: Antidumping Duty Administrative Review of Certain Preserved Mushrooms from the People's Republic of China: Selection of a Surrogate Country, dated February 28, 2011.

In accordance with 19 CFR 351.301(c)(3)(ii), for the final results of this administrative review, interested parties may submit publicly available information to value FOPs within 20 days after the date of publication of these preliminary results.

U.S. Price

In accordance with section 772(a) of the Act, we based Blue Field's, Jisheng's, and XITIC's U.S. prices on export prices (EP), because their first sales to unaffiliated purchasers were made before the date of importation and the use of constructed export price (CEP) was not otherwise warranted by the facts on the record.[9] As appropriate, we deducted foreign inland freight, foreign brokerage and handling, international freight, U.S. inland freight, U.S. duties, and U.S. brokerage and handling from the starting price (or gross unit price), in accordance with section 772(c)(2) of the Act. Where these services were provided by NME vendors we based the deduction on surrogate values.

The respondents collectively used three modes of transportation for foreign inland freight. Those modes were truck, train, and barge. As previously stated, where applicable we made deductions for these expenses from the U.S. price. We valued truck freight using a per-unit, POR-wide, average rate calculated from Indian data on the following Web site: *http://www.infobanc.com/logistics/logtruck.htm*. The logistics section of this Web site contains inland freight truck rates between many large Indian cities. *See* Memorandum to the File, "Surrogate Values for the Preliminary Results of Review of Certain Preserved Mushrooms from the People's Republic of China" (Surrogate Values Memorandum) dated February 28, 2011, at Exhibit 7.

For train freight, we used data published by the Indian Railway Conference Association. Specifically, we used "Goods Tariff No. 45 Pt. 1, (vol.

[6] Those seven companies are: China National Cereals, Oils & Foodstuffs Import & Export Corp., China Processed Food Import & Export Co., Fujian Yuxing Fruits & Vegetables Foodstuffs Development Co., Ltd., Guangxi Eastwing Trading Co., Ltd., Xiamen Gulong Import & Export Co., Ltd., Primera Harvest (Xiangfan) Co. Ltd., Xiamen Jiufa Edible Fungus Corp.

[7] *See, Sigma Corp.* v. *United States,* 117 F.3d 1401, 1405–06 (Fed. Cir. 1997) (affirming the Department's presumption of State control over exporters in non-market economy cases).

[8] *See* Memorandum from Carole Showers, Director, Office of Policy, to Richard Weible, Director, Office 7; Subject: Request for a List of Surrogate Countries for an Administrative Review of the Antidumping Duty Order on Certain Preserved Mushrooms from the People's Republic of China, dated June 25, 2010. The Department notes that these six countries are part of a non-exhaustive list of countries that are at a level of economic development comparable to the PRC.

[9] Jisheng did report a portion of its U.S. sales as CEP sales. However, we reclassified them as EP sales because given our date of sale methodology (explained below) we determined that they are more appropriately classified as EP sales. *See* Jisheng's September 13, 2010, submission at 6 and Jisheng's preliminary results analysis memorandum dated February 28, 2011.

II)." *See* Surrogate Values Memorandum at 14 for more information.

For barge freight, we used data published in the March 2007 issue of *The Hindu Business Line. See* the Surrogate Values Memorandum at 14 for more information.

We valued foreign brokerage and handling using the publicly summarized brokerage and handling expense reported in the U.S. sales listing of Indian mushroom producer, Agro Dutch Industries, Ltd. (Agro Dutch), in the 2004–2005 administrative review of Certain Preserved Mushrooms from India, which we then inflated to be contemporaneous with the POR. *See* Surrogate Values Memorandum at 13.

In their Section A questionnaire responses, Blue Field, Jisheng, and XITIC stated that they intended to use the invoice date as the date of sale. *See* Blue Field's June 22, 2010, submission at A–11, Jisheng's June 23, 2010, submission at A–10, and XITIC's June 16, 2010, submission at A–13. Subsequently, Blue Field and XITIC, in response to questions asked in supplemental questionnaires, substantiated that there were sometimes changes to the price or quantity of a sale following issuance of the purchase order but before issuance of the invoice. *See* Blue Field's August 19, 2010, submission at 2 and Exhibit 3 and XITIC's August 26, 2010, submission at S1–4. Therefore, because the record indicates that the material terms of Blue Field's and XITIC's U.S. sales were established on the date of invoice, pursuant to 19 CFR 351.401(i), we determine that invoice date is the appropriate date to use as the date of sale for these two respondents. However, Jisheng stated that during the POR there were no changes to either quantity or price between the purchase order date and the invoice date for any of its sales. *See* Jisheng's September 13, 2010, submission at 1. Therefore, for Jisheng, we have preliminarily determined that it is appropriate to use purchase order date, rather than invoice date, as the date of sale because it was on the purchase order date that the material terms of sale (*i.e.,* quantity and price) were set.

Normal Value

1. Methodology

Section 773(c)(1)(B) of the Act provides that the Department shall determine the NV using an FOP methodology if the merchandise under review is exported from an NME and the information does not permit the calculation of NV using home-market prices, third-country prices, or constructed value under section 773(a) of the Act. The Department bases NV on FOPs because the presence of government controls on various aspects of NMEs renders price comparisons and the calculation of production costs invalid under the Department's normal methodologies. *See, e.g., Tapered Roller Bearings and Parts Thereof, Finished or Unfinished, From the People's Republic of China: Preliminary Results of Antidumping Duty Administrative Review and Notice of Intent to Rescind in Part,* 70 FR 39744 (July 11, 2005), unchanged in *Tapered Roller Bearings and Parts Thereof, Finished and Unfinished, from the People's Republic of China: Final Results of 2003–2004 Administrative Review and Partial Rescission of Review,* 71 FR 2517 (January 17, 2006). Under section 773(c)(3) of the Act, FOPs include, but are not limited to: (1) Hours of labor required; (2) quantities of raw materials employed; (3) amounts of energy and other utilities consumed; and (4) representative capital costs, including depreciation. The Department based NV on FOPs reported by the respondents for materials, energy, labor, and packing.

Thus, in accordance with section 773(c) of the Act, we calculated NV by adding the values of the FOPs, overhead, selling, general and administrative (SG&A) expenses, profit, and packing costs.

2. Selection of Surrogate Values

In selecting the "best available information for surrogate values," *see* Section 773(c)(1) of the Act, consistent with the Department's preference, we considered whether the potential surrogate value data on the record were: Publicly available; product-specific; representative of broad market average prices; contemporaneous with the POR; and free of taxes and import duties. *See, e.g., Drill Pipe From the People's Republic of China: Preliminary Determination of Sales at Less Than Fair Value and Affirmative Determination of Critical Circumstances, and Postponement of Final Determination,* 75 FR 51004 (August 18, 2010), unchanged in *Drill Pipe From the People's Republic of China: Final Determination of Sales at Less Than Fair Value and Critical Circumstances,* 76 FR 196 (January 11, 2011). Where only surrogate values that were not contemporaneous with the POR were available on the record of this administrative review, we inflated the surrogate values using, where appropriate, the Indian WPI as published in *International Financial Statistics* by the International Monetary Fund. *See* Surrogate Values Memorandum at Exhibit 2.

In accordance with these guidelines, we calculated surrogate values, except as noted below, from import statistics of the primary selected surrogate country, India, from Global Trade Atlas (GTA), as published by Global Trade Information Services. Our use of GTA import data is in accordance with past practice and satisfies all of our criteria for surrogate values noted above.[10] However, in accordance with the legislative history of the Omnibus Trade and Competitiveness Act of 1988, *see* Conf. Report to Accompany H.R. 3, H.R. Rep. No. 576, 100th Cong., 2nd Sess. (1988) (OTCA 1988) at 590, the Department continued to apply its long-standing practice of disregarding surrogate values if it has a reason to believe or suspect the prices contained in the source data may be dumped or subsidized prices. In this regard, the Department has previously found that it is appropriate to disregard such surrogate value prices from Indonesia, South Korea and Thailand because we have determined that these countries maintain broadly available, non-industry specific export subsidies. Because there were generally available export subsidy programs in these countries during the POR, the Department finds that it is reasonable to infer that all exporters from Indonesia, South Korea and Thailand may have benefitted from these subsidies and to disregard prices from these countries.[11] Additionally, consistent with our practice, we disregarded prices from NME countries. Finally, imports that were labeled as originating from an "unspecified" country were excluded from the average value, because the Department could not be certain that they were not from either an NME country or a country with general export subsidies. *See, e.g., Certain Non-Frozen Apple Juice Concentrate from the*

[10] *See, e.g., Certain Preserved Mushrooms From the People's Republic of China: Preliminary Results of Antidumping Duty New Shipper Review,* 74 FR 50946, 50950 (October 2, 2009), unchanged in *Certain Preserved Mushrooms From the People's Republic of China: Final Results of Antidumping Duty New Shipper Review,* 74 FR 65520 (December 10, 2009).

[11] *See, e.g., Expedited Sunset Review of the Countervailing Duty Order on Certain Cut-to-Length Carbon Quality Steel Plate from Indonesia,* 70 FR 45692 (August 8, 2005), and accompanying Issues and Decision Memorandum at page 4; *Corrosion-Resistant Carbon Steel Flat Products from the Republic of Korea: Final Results of Countervailing Duty Administrative Review,* 74 FR 2512 (January 15, 2009), and accompanying Issues and Decision Memorandum at Comment 1, pages 17, 19–20; and *Certain Hot-Rolled Carbon Steel Flat Products from Thailand: Final Results of Countervailing Duty Determination,* 66 FR 50410 (October 3, 2001), and accompanying Issues and Decision Memorandum at Comment 1.

People's Republic of China: Notice of Preliminary Results of the New Shipper Review, 75 FR 47270 (August 5, 2010), unchanged in *Certain Non-Frozen Apple Juice Concentrate From the People's Republic of China: Final Results of the New Shipper Review,* 75 FR 81564 (December 28, 2010); and *Drill Pipe From the People's Republic of China: Preliminary Determination of Sales at Less Than Fair Value and Affirmative Determination of Critical Circumstances, and Postponement of Final Determination,* 75 FR 51004 (August 18, 2010), unchanged in *Drill Pipe From the People's Republic of China: Final Determination of Sales at Less Than Fair Value and Critical Circumstances,* 76 FR 1966 (January 11, 2011).

After identifying appropriate surrogate values, we calculated NV by multiplying the reported per-unit factor-consumption rates by the surrogate values. As appropriate we also added freight costs to the surrogate values that we calculated for the respondents' material inputs to make these prices delivered prices. We calculated these freight costs by multiplying surrogate freight rates by the shorter of the reported distance from the domestic supplier to the factory that produced the subject merchandise or the distance from the nearest seaport to the factory that produced the subject merchandise, as appropriate. Where there were multiple domestic suppliers of a material input, we calculated a weighted-average distance after limiting each supplier's distance to no more than the distance from the nearest seaport to the factory of each of the three respondents. This adjustment is in accordance with the decision by the Court of Appeals for the Federal Circuit in *Sigma Corp.* v. *United States,* 117 F.3d 1401, 1407–1408 (Fed. Cir. 1997). We increased the calculated costs of the FOPs for surrogate general expenses and profit. *See* Surrogate Values Memorandum at Exhibit 9.

Because Indian surrogate values were denominated in rupees, we converted these data to U.S. dollars (USD) using the applicable average exchange rate based on exchange rate data from the Department's Web site.

For further details regarding the specific surrogate values used for direct materials, energy inputs, and packing materials in these preliminary results, *see* the Surrogate Values Memorandum.

On May 14, 2010, the Court of Appeals for the Federal Circuit (Federal Circuit) in *Dorbest Ltd.* v. *United States,* 604 F.3d 1363 (Fed. Cir. 2010) (Dorbest IV), found that the regression-based method for calculating wage rates, as stipulated by 19 CFR 351.408(c)(3), uses data not permitted by the statutory requirements laid out in section 773(c)(4) of the Act. *See* Dorbest IV, 604 F.3d at 1372. The Department is continuing to evaluate options for determining labor values in light of the recent Federal Circuit decision. However, for these preliminary results, we have calculated an hourly wage rate to use in valuing respondents' reported labor input by averaging industry-specific earnings and/or wages in countries that are economically comparable to the PRC and that are significant producers of comparable merchandise.

For the preliminary results of this administrative review, the Department is valuing labor using a simple average industry-specific wage rate using earnings or wage data reported under Chapter 5B by the International Labor Organization (ILO). To achieve an industry-specific labor value, we relied on industry-specific labor data from the countries we determined to be both economically comparable to the PRC, and significant producers of comparable merchandise. A full description of the industry-specific wage rate calculation methodology is provided in the Surrogate Values Memorandum. The Department calculated a simple average industry-specific wage rate of $1.36 for these preliminary results. Specifically, for this review, the Department has calculated the wage rate using a simple average of the data provided to the ILO under Sub-Classification 15 of the ISIC–Revision 3 standard by countries determined to be both economically comparable to the PRC and significant producers of comparable merchandise. The Department finds this two-digit sub-classification under ISIC–Revision 3, described as "Manufacture of Food Products and Beverages" to be the best available labor wage rate surrogate value on the record because it is the most specific to mushrooms and is derived from industries that produce merchandise comparable to the subject merchandise. From the twenty countries that the Department determined were both economically comparable to the PRC and significant producers of comparable merchandise, the Department identified those with the necessary wage data. Of these twenty countries, the following eight reported industry-specific data under the ISIC-revision 3, Sub-Classification 15: Ecuador, Egypt, Indonesia, Jordan, Peru, Philippines, Thailand, and Ukraine.[12] Consequently, we calculated a simple average industry-specific wage rate from the data obtained for these eight countries. For further information on the calculation of the wage rate, *see* Surrogate Values Memorandum.

We offset the respondents' material costs for revenue generated from the sale of tin scrap. *See* Surrogate Values Memorandum at Exhibit 8.

Finally, to value overhead, selling, general, and administrative expenses (SG&A), and profit, we have preliminarily determined that the 2009–10 financial statements of the Indian mushroom producers Flex Foods Limited and Himalya International Limited, constitute the best information available. *See* Surrogate Values Memorandum at Exhibit 13 for our computations.

Adverse Facts Available

Sections 776(a)(1) and (2) of the Act provide that the Department shall apply "facts otherwise available" if, *inter alia,* necessary information is not on the record or an interested party or any other person: (A) Withholds information that has been requested by the Department; (B) fails to provide information within the deadlines established, or in the form and manner requested by the Department, subject to subsections (c)(1) and (e) of section 782 of the Act; (C) significantly impedes a proceeding; or (D) provides information that cannot be verified as provided by section 782(i) of the Act.

Where the Department determines that a response to a request for information does not comply with its request, section 782(d) of the Act provides that the Department will so inform the party submitting the response and will, to the extent practicable, provide that party the opportunity to remedy or explain the deficiency. If the party fails to remedy the deficiency or its response is not submitted within the applicable time limits, then the Department may, subject to section 782(e) of the Act, disregard all or part of the original and subsequent responses, as appropriate.

Section 776(b) of the Act further provides that the Department may use an adverse inference in applying the facts otherwise available when a party has failed to cooperate by not acting to the best of its ability to comply with a request for information. Section 776(b) of the Act also authorizes the Department to use as adverse facts available (AFA) information derived

[12] Because India (the primary surrogate country) did not report wage data in ISIC–Revision 3, which was relied upon for industry-specific wage rates in these preliminary results, it is not among the countries that the Department considered for inclusion in the average.

from the petition, the final determination, a previous administrative review, or any other information placed on the record.

For the reasons discussed below, we determine that, in accordance with sections 776(a)(2)(A) and (B) and 776(b) of the Act, the use of partial AFA is appropriate for the preliminary results with respect to Jisheng.

1. Products With No Factors of Production Reported

The original questionnaire states: "Unless otherwise instructed by the Department, you should ensure that your factors computer file contains a separate record for each unique product control number contained in your U.S. sales file." *See* May 18, 2010, questionnaire at D–6. However, in filing its questionnaire response, Jisheng included several products in the reported U.S. sales listing in its response to section C of the questionnaire for which it failed to provide any factors of production in its response to section D. *See* Jisheng's July 8, 2010, Sections C and D questionnaire response. In subsequent supplemental questionnaires the Department requested that Jisheng revise its FOP database so as to include a control number (CONNUM) for each CONNUM represented on its U.S. sales listing. *See* August 13, 2010, supplemental questionnaire at 6 (question 23a) and November 3, 2010, supplemental questionnaire at 4 (question 5a). However, Jisheng did not remedy or explain its deficient responses. *See* Jisheng's September 13, 2010, submission at Exhibits SC–1 and SD–1, November 18, 2010, submission at Exhibits SS1 and SS2, and January 21, 2011, submission at Exhibits SSS–1, SSS–2, SSS–3, and SSS–4. Consequently, we preliminarily determine that partial facts available is warranted because necessary information is not on the record and because Jisheng (1) withheld information requested by the Department; and (2) failed to provide the requested information by the applicable deadlines or in the form and manner requested. *See* section 776(a)(1), and (a)(2)(A) and (B) of the Act. Moreover, by never alleging that it was unable to provide the information, and by failing to provide usable information by the applicable deadlines, we find that the conditions of section 782(c)(1) and (e), to which section 776(a)(2)(B) is subject, have not been satisfied. In addition, we determine that Jisheng has not cooperated to the best of its ability by repeatedly failing to provide the requested FOP data, despite numerous opportunities to do so. Accordingly, an adverse inference in using facts available under section 776(b) of the Act is warranted for Jisheng with regard to this specific information. For the CONNUMs for which Jisheng has not provided factor information we have applied, as AFA, the highest NV for any CONNUM in Jisheng's database submitted on the record of this administrative review. For additional information concerning this calculation, *see* Jisheng's Preliminary Results Analysis Memorandum.

2. Products With Unreported Packing Usage Factors

For reasons not susceptible to public summary,[13] some of Jisheng's reported CONNUMs were missing certain factor values. *See* Jisheng's September 13, 2010, submission at Exhibit SD–1, and its November 18, 2010, submission at Exhibit SS–2. Therefore, the Department requested that Jisheng submit factor values for particular CONNUMs for the twelve months of the prior POR. *See* January 10, 2011, supplemental questionnaire at 4 (question 6). However, despite our requests, Jisheng's revised FOP database did not include packing usage factors for all CONNUMs. *See* Jisheng's January 21, 2011, submission at Exhibit SSS–2, SSS–3, and SSS–4. Therefore, we preliminarily determine that partial facts available is warranted because necessary information is not on the record and because Jisheng failed to provide requested information by the applicable deadlines or in the form and manner requested by the Department. *See* section 776(a)(1) and (a)(2)(B) of the Act. Moreover, by never explaining why it was unable to provide the requested information, and by failing to provide usable information by the applicable deadlines, we find that the conditions of section 782(c)(1) and (e), to which section 776(a)(2)(B) is subject, have not been satisfied. In addition, we determine that by failing to provide the requested FOP data, Jisheng has not cooperated to the best of its ability. Accordingly, we find that an adverse inference in using facts available under section 776(b) of the Act is warranted for Jisheng with regard to this specific information. Specifically, for the CONNUMs for which Jisheng has not provided packing usage factors, we have applied, as AFA, the highest usage factor for any CONNUM for which it did report packing usage factors on the record of this administrative review. For additional information concerning this calculation, *see* Jisheng's preliminary results analysis memorandum.

[13] *See* Jisheng's November 16, 2010 submission at 6 and 7.

Preliminary Results of the Review

The Department has determined that the following preliminary dumping margins exist for the period February 1, 2009, through January 31, 2010. Respondents other than mandatory respondents will receive the weighted-average of the margins calculated for those companies selected for individual review (*i.e.,* mandatory respondents), excluding de minimis margins or margins based entirely on adverse facts available.

CERTAIN PRESERVED MUSHROOMS FROM THE PRC

Exporter	Weighted-average margin (percent)
Blue Field (Sichuan) Food Industrial Co., Ltd.	30.10
Guangxi Jisheng Foods, Inc.	146.88
Xiamen International Trade & Industrial Co., Ltd.	1.01
Ayecue (Liaocheng) Foodstuff Co., Ltd.	53.69
Fujian Golden Banyan Foodstuffs Industrial Co., Ltd.	53.69
Shandong Jiufa Edible Fungus Corporation, Ltd.	53.69
Zheijiang Iceman Group Co., Ltd.	53.69
PRC-wide rate	198.63

Public Comment

The Department will disclose to parties to this proceeding the calculations performed in reaching the preliminary results within five days of the date of publication of these preliminary results. *See* 19 CFR 351.224(b). Interested parties may submit written comments (case briefs) within 30 days of publication of the preliminary results and rebuttal comments (rebuttal briefs) within five days after the time limit for filing case briefs. *See* 19 CFR 351.309(c)(1)(ii) and 351.309(d)(1). Pursuant to 19 CFR 351.309(d)(2), rebuttal briefs must be limited to issues raised in the case briefs. Parties who submit arguments are requested to submit with the argument: (1) A statement of the issue; (2) a brief summary of the argument; and (3) a table of authorities. Further, the Department requests that parties submitting written comments provide the Department with a diskette containing the public version of those comments.

Any interested party may request a hearing within 30 days of publication of this notice. *See* 19 CFR 351.310(c).

Interested parties who wish to request a hearing or to participate if one is requested, must submit a written request to the Assistant Secretary for Import Administration within 30 days of publication of this notice. Requests should contain: (1) The party's name, address, and telephone number; (2) the number of participants; and (3) a list of issues to be discussed. *See* 19 CFR 351.310(c). Issues raised in the hearing will be limited to those raised in the briefs.

Unless the deadline is extended pursuant to section 751(a)(2)(B)(iv) of the Act, the Department will issue the final results of this administrative review, including the results of our analysis of the issues raised by the parties in their comments, within 120 days after issuance of these preliminary results.

Deadline for Submission of Publicly Available Surrogate Value Information

In accordance with 19 CFR 351.301(c)(3), the deadline for submission of publicly available information to value factors of production under 19 CFR 351.408(c) is 20 days after the date of publication of the preliminary determination. In accordance with 19 CFR 351.301(c)(1), if an interested party submits factual information less than ten days before, on, or after (if the Department has extended the deadline), the applicable deadline for submission of such factual information, an interested party has ten days to submit factual information to rebut, clarify, or correct the factual information no later than ten days after such factual information is served on the interested party. However, the Department notes that 19 CFR 351.301(c)(1), permits new information only insofar as it rebuts, clarifies, or corrects information recently placed on the record. *See, e.g., Glycine from the People's Republic of China: Final Results of Antidumping Duty Administrative Review and Final Rescission, in Part,* 72 FR 58809 (October 17, 2007), and accompanying Issues and Decision Memorandum at Comment 2. Furthermore, the Department generally will not accept business proprietary information in either the surrogate value submissions or the rebuttals thereto, as the regulation regarding the submission of surrogate values allows only for the submission of publicly available information.

Assessment Rates

Upon issuance of the final results, the Department will determine, and CBP shall assess antidumping duties on all appropriate entries covered by this review. The Department intends to issue assessment instructions directly to CBP 15 days after the date of publication of the final results of this review. In accordance with 19 CFR 351.212(b)(1), we calculated exporter/importer (or customer)-specific assessment rates for the merchandise subject to this review. Where the respondent has reported reliable entered values, we calculated importer (or customer)-specific *ad valorem* rates by aggregating the dumping margins calculated for all U.S. sales to each importer (or customer), and dividing this amount by the total entered value of the sales to each importer (or customer). *See* 19 CFR 351.212(b)(1). Where an importer (or customer)-specific *ad valorem* rate is greater than *de minimis,* we will apply the assessment rate to the entered value of the importers'/customers' entries during the POR. *See* 19 CFR 351.212(b)(1).

Where we do not have entered values for all U.S. sales, we calculated a per-unit assessment rate by aggregating the antidumping duties due for all U.S. sales to each importer (or customer) and dividing this amount by the total quantity sold to that importer (or customer). *See* 19 CFR 351.212(b)(1). To determine whether the duty assessment rates are *de minimis,* in accordance with the requirement set forth in 19 CFR 351.106(c)(2), we calculated importer (or customer)-specific *ad valorem* ratios based on the estimated entered value. Where an importer (or customer)-specific *ad valorem* rate is zero or *de minimis,* we will instruct CBP to liquidate appropriate entries without regard to antidumping duties. *See* 19 CFR 351.106(c)(2).

For the companies that were not selected for individual review, we calculated an assessment rate based on the weighted-average of the cash deposit rates calculated for companies selected for individual review, where those rates were not *de minimis* or based on adverse facts available, in accordance with Department practice.

Cash Deposit Requirements

The following cash deposit requirements, when imposed, will be effective upon publication of the final results of this administrative review for all shipments of subject merchandise entered, or withdrawn from warehouse, for consumption on or after the publication date, as provided by section 751(a)(2)(C) of the Act: (1) For the exporters listed above, the cash-deposit rate will be that established in the final results of this review (except, if the rate is zero or *de minimis, i.e.,* less than 0.5 percent, no cash deposit will be required for that company); (2) for previously investigated or reviewed PRC and non-PRC exporters not listed above that have separate rates, the cash deposit rate will continue to be the exporter-specific rate published for the most recent period; (3) for all PRC exporters of subject merchandise that have not been found to be entitled to a separate rate, the cash deposit rate will be the PRC-wide rate of 198.63 percent; and (4) for all non-PRC exporters of subject merchandise that have not received their own rate, the cash deposit rate will be the rate applicable to the PRC exporters that supplied that non-PRC exporter. These cash deposit requirements, when imposed, shall remain in effect until further notice.

Notification to Importers

This notice serves as a preliminary reminder to importers of their responsibility under 19 CFR 351.402(f)(2) to file a certificate regarding the reimbursement of antidumping duties prior to liquidation of the relevant entries during this review period. Failure to comply with this requirement could result in the Secretary's presumption that reimbursement of antidumping duties occurred and the subsequent assessment of double antidumping duties.

This administrative review and notice are in accordance with sections 751(a)(1) and 777(i)(1) of the Act and 19 CFR 351.221(b)(4).

Dated: February 28, 2011.

Paul Piquado,

Acting Deputy Assistant Secretary for Import Administration.

[FR Doc. 2011–5262 Filed 3–7–11; 8:45 am]

BILLING CODE 3510–DS–P

DEPARTMENT OF COMMERCE

National Institute of Standards and Technology

Smart Grid Advisory Committee

AGENCY: National Institute of Standards and Technology, Department of Commerce.

ACTION: Notice of open meeting.

SUMMARY: The Smart Grid Advisory Committee (SGAC or Committee), will hold a meeting on Thursday, March 24, 2011 from 8:30 a.m. to 5 p.m. The primary purpose of this meeting is to review the early findings and observations of each Subcommittee, strategize the Table of Contents for the Committee report to NIST, agree on the page limit for each subcommittee, and look for any common overarching

themes. There will also be breakouts for each subcommittee to meet individually. The agenda may change to accommodate Committee business. The final agenda will be posted on the Smart Grid Web site at *http://www.nist.gov/smartgrid.*

DATES: The SGAC will hold a meeting on Thursday, March 24, 2011, from 8:30 a.m. until 5 p.m. The meeting will be open to the public.

ADDRESSES: The meeting will be held in the Lecture Room C, in the Administration Building at NIST in Gaithersburg, Maryland. Please note admittance instructions under the **SUPPLEMENTARY INFORMATION** section of this notice.

FOR FURTHER INFORMATION CONTACT: Dr. George W. Arnold, National Coordinator for Smart Grid Interoperability, National Institute of Standards and Technology, 100 Bureau Drive, Mail Stop 8100, Gaithersburg, MD 20899–8100; telephone 301–975–2232, fax 301–975–4091; or via e-mail at *nistsgfac@nist.gov.*

SUPPLEMENTARY INFORMATION: The Committee was established in accordance with the Federal Advisory Committee Act (5 U.S.C. App.).

Background information on the Committee is available at *http://www.nist.gov/smartgrid/committee.cfm.*

Pursuant to the Federal Advisory Committee Act, 5 U.S.C. App., notice is hereby given that the Smart Grid Advisory Committee (SGAC) will hold a meeting on Thursday, March 24, 2011, from 8:30 a.m. until 5 p.m. The meeting will be held in the Lecture Room C, in the Administration Building at NIST in Gaithersburg, Maryland. The primary purpose of this meeting is to review the early findings and observations of each Subcommittee, strategize the Table of Contents for the Committee report to NIST, agree on the page limit for each subcommittee, and look for any common overarching themes. There will also be breakouts for each subcommittee to meet individually. The agenda may change to accommodate Committee business. The final agenda will be posted on the Smart Grid Web site at *http://www.nist.gov/smartgrid.*

Individuals and representatives of organizations who would like to offer comments and suggestions related to the Committee's affairs are invited to request a place on the agenda by contacting Cuong Nguyen at *cuong.nguyen@nist.gov* or (301) 975–2254 no later than March 17, 2011. On March 24, 2011, approximately one-half hour will be reserved at the end of the meeting for public comments, and speaking times will be assigned on a first-come, first-serve basis. The amount of time per speaker will be determined by the number of requests received, but is likely to be about 3 minutes each. Questions from the public will not be considered during this period. Speakers who wish to expand upon their oral statements, those who had wished to speak but could not be accommodated on the agenda, and those who were unable to attend in person are invited to submit written statements to the Office of the National Coordinator for Smart Grid Interoperability, National Institute of Standards and Technology, 100 Bureau Drive, Mail Stop 8100, Gaithersburg, MD 20899–8100; fax 301–975–4091; or via e-mail at *nistsgfac@nist.gov.*

All visitors to the NIST site are required to pre-register to be admitted. Anyone wishing to attend this meeting must register by close of business Thursday, March 17, 2011, in order to attend. Please submit your name, time of arrival, e-mail address, and phone number to Cuong Nguyen. Non-U.S. citizens must also submit their country of citizenship, title, employer/sponsor, and address. Mr. Nguyen's e-mail address is *cuong.nguyen@nist.gov* and his phone number is (301) 975–2254.

Dated: March 2, 2011.

Charles H. Romine,

Acting Associate Director for Laboratory Programs.

[FR Doc. 2011–5250 Filed 3–7–11; 8:45 am]

BILLING CODE 3510–13–P

DEPARTMENT OF COMMERCE

National Institute of Standards and Technology

[Docket No. 110124059–1058–02]

Announcing Draft Federal Information Processing Standard (FIPS) 201–2, Personal Identity Verification of Federal Employees and Contractors Standard, Request for Comments, and Public Workshop on Draft FIPS 201–2

AGENCY: National Institute of Standards and Technology (NIST), Commerce.

ACTION: Notice and request for comments.

SUMMARY: The National Institute of Standards and Technology (NIST) publishes this notice to request comments on Draft Federal Information Processing Standard (FIPS) Publication 201–2, "Personal Identity Verification of Federal Employees and Contractors Standard." Draft FIPS 201–2 amends FIPS 201–1 and includes clarifications of existing text, removal of conflicting requirements, additional text to improve clarity, adaptation to changes in the environment since the publication of FIPS 201–1, and specific changes requested by Federal agencies and implementers. NIST has received numerous change requests, some of which, after analysis and coordination with the Office of Management and Budget (OMB) and United States Government (USG) stakeholders, are incorporated in the Draft FIPS 201–2. Before recommending FIPS 201–2 to the Secretary of Commerce for review and approval, NIST invites comments from the public concerning the proposed changes. NIST will hold a public workshop at NIST in Gaithersburg, MD to present the Draft FIPS 201–2. Please see admittance instructions in the **SUPPLEMENTARY INFORMATION** section below.

DATES: Comments must be received by June 6, 2011. The public workshop will be held on April 18–19, 2011. Pre-registration must be completed by close of business on April 11, 2011.

ADDRESSES: Written comments may be sent to: Chief, Computer Security Division, Information Technology Laboratory, ATTN: Comments on Revision Draft FIPS 201–1, National Institute of Standards and Technology, 100 Bureau Drive, Mail Stop 8930, Gaithersburg, MD 20899. Electronic comments may be sent to: *piv_comments@nist.gov.* Anyone wishing to attend the workshop in person, must pre-register at *http://www.nist.gov/allevents.cfm.* Additional workshop details and webcast will be available on the NIST Computer Security Resource Center Web site at *http://csrc.nist.gov.*

FOR FURTHER INFORMATION CONTACT: William MacGregor, (301) 975–8721, National Institute of Standards and Technology, 100 Bureau Drive, Mail Stop 8930, Gaithersburg, MD 20899–8930, e-mail: *william.macgregor@nist.gov,* or Hildegard Ferraiolo, (301) 975–6972, e-mail: *hildegard.ferraiolo@nist.gov,* or Ketan Mehta, (301) 975–8405, e-mail: *ketan.mehta@nist.gov.*

SUPPLEMENTARY INFORMATION: FIPS 201 was issued in February 2005, and in accordance with NIST policy was due for review in 2010. In consideration of changes in the environment over the last five years and specific requests for changes from USG stakeholders, NIST determined that a revision of FIPS 201–1 (version in effect) is warranted. NIST has received numerous change requests, some of which, after analysis and coordination with OMB and USG stakeholders, are incorporated in the Draft FIPS 201–2. Other change requests

incorporated in the Draft FIPS 201–2 result from the 2010 Business Requirements Meeting held at NIST. The meeting focused on business requirements of Federal departments and agencies. The following is a summary of changes reflected in the Draft FIPS 201–2. Please note that the proposed revision of the document has caused a renumbering of several sections of FIPS 201–1 (version in effect). The section references below are consistent with Draft FIPS 201–2. The changes in Draft FIPS 201–2 are:

• Changes to clarify requirements and editorial corrections are incorporated throughout the document. These changes are not intended to modify the substantive requirements in FIPS 201–1.

• Specific modifications that potentially change an existing requirement or add a new requirement are reflected in the following list.

—In Section 2.1, the second bullet is *replaced* with "A credential is issued only after the National Agency Check with Written Inquiries (NACI) or equivalent is initiated and the FBI National Criminal History Check (NCHC) is completed," to eliminate an inconsistency that was inadvertently introduced by the FIPS 201–1 revision.

—In Section 2.2, the text is *replaced* with a reference to the memorandum from Linda Springer, Director Office of Personnel Management (OPM), dated 31 July 2008, "Final Credentialing Standards for Issuing Personal Identity Verification Cards under HSPD–12." The purpose of this change is to update the identity credentialing requirements in accordance with OPM guidance issued after the FIPS 201–1 was published.

—Section 2.3 is *modified* to directly incorporate the content from the I–9 form that is relevant to FIPS 201. This change is made to eliminate confusion that has resulted from I–9 content that is not used by FIPS 201–1 processes; it also provides a more precise requirement statement for the two forms of identity source documents.

—Section 2.3 is *modified* to introduce the concept of a "chain-of-trust," maintained by a PIV Card Issuer, further described in Sections 2.4, 2.5 and 4.4.1. The "chain-of-trust" allows the holder of a PIV Card to obtain a replacement for a compromised, lost, stolen, or damaged PIV Card through biometric authentication. This capability is requested by Federal agencies because the alternative, complete re-enrollment, is time-consuming and expensive. The "chain-of-trust" method can only be used if the PIV Card Issuer has retained biometric data through which an individual can be authenticated.

—Section 2.4 is *added* to define a 1-to-1 biometric match. A 1-to-1 biometric match is necessary to associate a presenting individual with their 'chain-of-trust' record. The objective is to reduce replacement cost to agencies for lost, stolen, or damaged PIV Cards, to reduce the amount of data gathering, and minimize in-person visits without compromising the security objectives of HSPD–12.

—Section 2.4 is *modified* to increase the maximum life of PIV Card from 5 years to 6 years. This revision is made in response to agency requests to synchronize lifecycles of card, certificates, and biometric data.

—Section 2.4.1 is *added* to introduce a special rule for pseudonyms, clarifying the conditions under which pseudonyms may be approved by the sponsoring agency (*i.e.,* for the protection of the cardholder). FIPS 201–1 does not specify requirements for issuing PIV credentials under pseudonyms. This use-case requires a normative list of minimum requirements within the standard.

—Section 2.4.2 is *added* to introduce a grace period for the period between termination of an employee or contractor and re-employment by the USG or a Federal contractor. If re-employment occurs within the grace period, to obtain a new PIV Card, an NCHC is required and a complete NACI is not required. For example, an employee may be detailed to a special assignment for a brief time period and, upon completion of the assignment, return to the original agency. In another case, the PIV Cardholder may move from one Federal agency to another within a short period of time. In each of these situations, repeating the entire identity proofing and identity vetting process when all the necessary information about the individual was previously collected in accordance with FIPS 201–1 is inefficient. The grace period to allow reuse of the existing records held by an agency addresses this inefficiency.

—Section 2.5 is *modified* to restructure the PIV Card maintenance procedures slightly. "Renewal" of a PIV Card to re-collect biometric data, currently a facial image and two fingerprint templates, is required once every twelve years, to update files to account for normal aging. Subsequent to the issuance of FIPS 201–1 and based on comments received by NIST, it is apparent that terms such as "renewal", "reissuance", "replacement", "registration", etc., are used interchangeably and inaccurately and that FIPS 201–1 needs to clearly state the purpose and circumstances under which identity credential renewal is required. Draft FIPS 201–2 introduces normative text to address this ambiguity.

—Section 2.5.2.1 is *added* to recognize legal name changes. Name change is a very common occurrence, and it represents a major change in identity source documents. Specific requirements to manage and record legal name changes correctly and consistently across identity management systems were identified and are included.

—Sections 2.5.3 and 2.5.4 are *added* to provide requirements for post-issuance updates made to the PIV Card after it is issued to the cardholder. These requirements are added in response to agency requests.

—Section 2.5.5 is *added* to provide details on reset procedures for PIN, biometrics or other types of resettable data as per agency requests.

—Section 4.1.4 is *added* to provide visual card topography zones and color specifications from SP 800–104 "A Scheme for PIV Visual Card Topography." SP 800–104 was developed after FIPS 201–1 was published to enhance the uniformity of colors and additional zones needed by agencies.

—Section 4.1.4.1 is *modified* to allow longer names (70 characters) to be printed on the card in the existing zone. This change is made to enable printing of complete names for required accuracy.

—Section 4.1.4.3 is *added* to provide requirements for compliance with Section 508 of the Americans with Disabilities Act. The U.S. Access Board, an independent Federal agency devoted to accessibility for people with disabilities, requested improvements in FIPS 201 to facilitate the use of the PIV Card by people with impaired vision or manual dexterity. For example, an improvement could allow an unsighted person to quickly and positively orient the card by touch when presenting the PIV Card to a card reader.

—Section 4.1.6.1 is *modified* to revise the list of mandatory and optional PIV logical credentials. This section is modified based on the inputs received during the 2010 Business Requirements Meeting described above. The section adds a requirement to collect alternate iris images when

an agency cannot capture reliable fingerprints. This section also specifies a mandatory asymmetric card authentication key as part of PIV logical credentials and adds an optional On-card biometric comparison as a means of performing card activation and PIV authentication mechanism. The section includes hooks for additional keys if they are needed for secure messaging. In addition, NIST proposes that specific key references and their use will be defined in a future special publication.

—Section 4.1.7.1 is *modified* to allow a PIN or equivalent verification data (e.g., biometric data) to activate a PIV Card to perform privileged operations. The requirement that all PIV System cryptographic modules be tested and validated to FIPS 140–2 Security Level 2 (logical) or Security Level 3 (physical) is not changed.

—Section 4.3 is *modified* to make the NACI Indicator optional and to deprecate its use. The NACI Indicator originally was included in the PIV Authentication Certificate to inform relying systems that the background investigation had not been completed before issuing the PIV Card. Since the issuance of FIPS 201–1, timely completion of background investigations has improved, online status checking services are now available, OPM requirements for background investigations have been revised, and OMB reporting requirements are in place. These improvements provide sufficient controls to make the need for storing NACI Indicator on the PIV Card optional and to deprecate its use.

—Section 4.3 is *modified* to add an option to include country(ies) of citizenship of Foreign Nationals in the PIV Authentication Certificate. This change reflects the desirability of electronically reading the affiliation of Foreign Nationals.

—Section 4.5.3 is *added* to allow a possible future inclusion of an optional ISO/IEC 24727 profile that enables middleware a degree of independence from credential interfaces and vice versa and thus provides adaptability and resilience to PIV card evolution.

—Sections 6.2.2, 6.2.3.1, and 6.2.3.2 are *modified* to remove the qualifier "(Optional)" from the requirement for signature verification and certificate path validation in the CHUID, BIO, and BIO–A authentication mechanisms. These signature verification and path validation functions would be mandatory under FIPS 201–2 to achieve the authentication assurance confidence levels shown in Tables 6–2 and 6–3.

—Section 6.2.5 and 6.2.6 are *added* to provide authentication mechanisms based on optional PIV data elements. Specifically, an On-card biometric comparison authentication mechanism is added in Section 6.2.5 and a symmetric card authentication key authentication mechanism is added in Section 6.2.6.

—Appendix A is *removed.*

FIPS 201–1 and Draft FIPS 201–2 are available electronically from the NIST Web site at: *http://csrc.nist.gov/publications/fips/index/html.*

NIST will hold a public workshop on Draft FIPS 201–2 on Monday and Tuesday, April 18 and 19, 2011 at NIST in Gaithersburg, Maryland. The workshop may also be attended remotely via webcast. The agenda, webcast and related information for the public workshop will be available before the workshop on the NIST Computer Security Resource Center Web site at *http://csrc.nist.gov.* This workshop is not being held in anticipation of a procurement activity. Anyone wishing to attend the workshop in person, must pre-register at *http://www.nist.gov/allevents.cfm* by close of business Monday, April 11, 2011, in order to enter the NIST facility and attend the workshop. In accordance with the Information Technology Management Reform Act of 1996 (Pub. L. 104–106) and the Federal Information Security Management Act of 2002 (FISMA) (Pub. L. 107–347), the Secretary of Commerce is authorized to approve Federal Information Processing Standards (FIPS). Homeland Security Presidential Directive (HSPD) 12, entitled "Policy for a Common Identification Standard for Federal Employees and Contractors", dated August 27, 2004, directed the Secretary of Commerce to promulgate, by February 27, 2005, " * * * a Federal standard for secure and reliable forms of identification (the 'Standard') * * * ," and further directed that the Secretary of Commerce "shall periodically review the Standard and update the Standard as appropriate in consultation with the affected agencies."

E.O. 12866: This notice has been determined not to be significant for purposes of E.O. 12866.

Dated: February 17, 2011.

Charles H. Romine,

Acting Associate Director for Laboratory Programs.

[FR Doc. 2011–5259 Filed 3–7–11; 8:45 am]

BILLING CODE 3510–13–P

DEPARTMENT OF COMMERCE

National Oceanic and Atmospheric Administration

Proposed Information Collection; Comment Request; Marianas Trench Marine National Monument Knowledge and Attitudes Survey

AGENCY: National Oceanic and Atmospheric Administration (NOAA), Commerce.

ACTION: Notice.

SUMMARY: The Department of Commerce, as part of its continuing effort to reduce paperwork and respondent burden, invites the general public and other Federal agencies to take this opportunity to comment on proposed and/or continuing information collections, as required by the Paperwork Reduction Act of 1995.

DATES: Written comments must be submitted on or before May 9, 2011.

ADDRESSES: Direct all written comments to Diana Hynek, Departmental Paperwork Clearance Officer, Department of Commerce, Room 6616, 14th and Constitution Avenue, NW., Washington, DC 20230 (or via the Internet at *dHynek@doc.gov*).

FOR FURTHER INFORMATION CONTACT: Requests for additional information or copies of the information collection instrument and instructions should be directed to Dr. Stewart Allen, (808) 944–2186 or *Stewart.Allen@noaa.gov*.

SUPPLEMENTARY INFORMATION:

I. Abstract

President George W. Bush established the Marianas Trench Marine National Monument (Monument) on January 6, 2009, by Presidential Proclamation 8335. The monument includes approximately 95,216 square miles within three units in the Mariana Archipelago. The Mariana Trench Unit is almost 1,100 miles long and 44 miles wide and includes only the submerged lands. The Volcanic Unit consists of submerged lands around 21 undersea mud volcanoes and thermal vents along the Mariana Arc. The Islands Unit includes only the waters and submerged lands of the three northernmost Mariana Islands: Farallon de Pajaros or Uracas; Maug; and Asuncion, below the mean low water line. Within the Islands Unit of the monument, commercial fishing is prohibited but sustenance, recreational, and traditional indigenous fishing can be allowed on a sustainable basis.

The Secretary of the Interior has management responsibility for the monument, in consultation with the Secretary of Commerce who, through

the National Oceanic and Atmospheric Administration (NOAA), has primary responsibility for managing fishery-related activities. These agencies are required to consult with the Secretary of Defense, the United States (U.S.) Coast Guard, and the Government of the Commonwealth of the Northern Mariana Islands in managing the monument. A subsequent Secretary of the Interior action on January 16, 2009, delegated management responsibilities for the monument to the Fish and Wildlife Service through, and placed two of the units (the Mariana Trench and Volcanic Units) within, the National Wildlife Refuge System as the Mariana Trench and Mariana Arc of Fire National Wildlife Refuges.

Management activities are anticipated to include public education programs and public outreach regarding the coral reef ecosystem and related marine resources and species of the monument and efforts to conserve them; traditional access by indigenous persons, for culturally significant subsistence, cultural and religious uses within the monument; a program to assess and promote monument-related scientific exploration and research, tourism, and recreational and economic activities and opportunities in the Commonwealth of the Northern Mariana Islands (CNMI); a process to consider requests for recreational fishing permits in certain areas of the Islands Unit, based on an analysis of the likely effects of such fishing on the marine ecosystems of these areas, sound professional judgment that such fishing will not materially interfere with or detract from the fulfillment of the purposes of this proclamation, and the extent to which such recreational fishing shall be managed as a sustainable activity; programs for monitoring and enforcement necessary to ensure that scientific exploration and research, tourism, and recreational and commercial activities do not degrade the monument's coral reef ecosystem or related marine resources or species or diminish the monument's natural character.

The Human Dimensions Research Program at NOAA Fisheries Pacific Islands Fisheries Science Center is initiating a survey to support development of a management plan for the Monument. Designation of the Monument was accompanied by social debate over the merits of designation, the economic benefits, increased Federal management in the archipelago, the impacts to fishermen and fishing communities, and other effects. Now that the Monument has been established and management planning is beginning, there is a need for research to define CNMI and Guam residents' management preferences and perceptions of effects so this information is available to managers as they develop and begin to implement the plan. The survey contains questions on awareness, knowledge, and attitudes regarding the Monument, preferences for management and scientific research, and level of interest in becoming involved in Monument management and outreach activities. Additional questions include experiences with and attitudes toward existing uses of coastal and marine resources, to provide a context for interpreting responses regarding the Monument.

II. Method of Collection

Data will be collected through a telephone survey of a random sample of adult members of Guam and CNMI households.

III. Data

OMB Control Number: None.
Form Number: None.
Type of Review: Regular submission.
Affected Public: Individuals or households.
Estimated Number of Respondents: 800.
Estimated Time per Response: 20 minutes.
Estimated Total Annual Burden Hours: 267.
Estimated Total Annual Cost to Public: $0.

IV. Request for Comments

Comments are invited on: (a) Whether the proposed collection of information is necessary for the proper performance of the functions of the agency, including whether the information shall have practical utility; (b) the accuracy of the agency's estimate of the burden (including hours and cost) of the proposed collection of information; (c) ways to enhance the quality, utility, and clarity of the information to be collected; and (d) ways to minimize the burden of the collection of information on respondents, including through the use of automated collection techniques or other forms of information technology.

Comments submitted in response to this notice will be summarized and/or included in the request for OMB approval of this information collection; they also will become a matter of public record.

Dated: March 3, 2011.

Gwellnar Banks,

Management Analyst, Office of the Chief Information Officer.

[FR Doc. 2011–5150 Filed 3–7–11; 8:45 am]

BILLING CODE 3510–22–P

DEPARTMENT OF COMMERCE

National Oceanic and Atmospheric Administration

[0648–XA239]

Magnuson-Stevens Act Provisions; General Provisions for Domestic Fisheries; Application for Exempted Fishing Permit

AGENCY: National Marine Fisheries Service (NMFS), National Oceanic and Atmospheric Administration (NOAA), Commerce.

ACTION: Notice; request for comments.

SUMMARY: The Assistant Regional Administrator for Sustainable Fisheries, Northeast Region, NMFS, has made a preliminary determination that the subject exempted fishing permit (EFP) application contains all the required information and warrants further consideration. The subject EFP would allow commercial fishing vessels to conduct fishing operations that are otherwise restricted by the regulations governing the fisheries of the Northeastern United States. Regulations under the Magnuson-Stevens Fishery Conservation and Management Act require publication of this notification to provide interested parties the opportunity to comment on applications for proposed EFPs.

DATES: Comments must be received on or before March 23, 2011.

ADDRESSES: Comments may be submitted by e-mail to *NERO.EFP@noaa.gov.* Written comments should be sent to Patricia A. Kurkul, Regional Administrator, NMFS, Northeast Regional Office, 55 Great Republic Drive, Gloucester, MA 01930. Mark the outside of the envelope "Comments on the REDNET EFP." Comments may also be sent via facsimile (fax) to (978) 281–9135.

FOR FURTHER INFORMATION CONTACT: Travis Ford, Fishery Management Specialist, (978) 281–9233, fax (978) 281–9135.

SUPPLEMENTARY INFORMATION: The Maine Department of Marine Resources (DMR) has submitted an EFP application for five vessels participating in a study titled, "REDNET: A Network to Redevelop a Sustainable Redfish (*Sebastes fasciatus*) Trawl Fishery in the Gulf of Maine (GOM)". This project is funded by the Northeast Fisheries Science Center's (NEFSC) Cooperative Research Program. The primary objective of this study is to devise strategies and means to efficiently harvest the redfish resource in the Gulf of Maine (GOM) while avoiding non-

target catch. The proposed work is to meet the following objectives: Catch and bycatch assessment of a targeted redfish fishery; bottom trawl mesh size evaluation and optimization for targeted redfish catch retention and reduction of juvenile redfish and other bycatch; redfish processing and marketing evaluation and strategies; and outreach and implementation of the project results. The anticipated results of the project are defined gear type(s) and/or time/area combinations that maximize the long-term benefit from the redfish resource while minimizing negative impacts, thereby providing a means to achieve the Acceptable Catch Limit (ACL) for a rebuilt, but largely inaccessible, redfish resource.

The EFP would exempt the vessels from the following regulations implementing the Northeast (NE) Multispecies Fishery Management Plan (FMP): NE multispecies minimum fish size for redfish, specified at 50 CFR 648.83(a); and minimum mesh size of 6.5 inches (16.5 cm) for multispecies vessels fishing in the GOM specified at 50 CFR 648.80(a)(3)(i). In addition, vessels would be exempt from the following regulations for other groundfish species for sampling purposes only: Other minimum fish size restrictions; fish possession limits; species quota closures; prohibited fish species, not including species protected under the Endangered Species Act; and gear-specific fish possession restrictions. All non-compliant fish would be discarded as soon as practicable following data collection. These exemptions would allow investigators to evaluate the optimal mesh size to harvest legal-sized redfish (22.9 cm; 9 inches) while minimizing bycatch, and to selectively harvest redfish.

Baseline data would be collected by means of 10 days of experimental redfish fishing under this EFP using 10.16-cm (4-inch) mesh in the codend of a standard groundfish trawl. Based on initial sampling, investigators intend to refine sampling levels, times, and areas as the project progresses. Investigators will review potential sources of variability and evaluate them in terms of their potential effects on results. Sources of variability include: Area fished; seasonal availability; life stage; time of day; gear; and towing speed. Catches of all legal-sized species (target and non-target) will count against the appropriate groundfish sector allocation. No fish below the minimum fish size will be landed.

During the initial experimental fishing, fishermen will be asked to fish in a commercial manner using groundfish trawl nets equipped with a 10.16-cm (4-inch) mesh codend to maximize their legal-sized redfish catches and minimize discards. The fishermen will attempt to identify schools of redfish, set the net, catch the school, and haul back. This protocol will reduce the likelihood of towing between schools and thereby reduce bycatch based on historical experience.

Project investigators and/or technicians will be on board every experimental fishing trip and will document all catch and bycatch encountered following NE Fishery Observer Program protocols. Project personnel will estimate, when necessary, the total catch of legal and sublegal redfish per tow (separately), and then identify and weigh all other species. If there is a very large catch, the observers will follow NMFS sub-sampling protocols. Lengths of 100 individuals will be collected for redfish and other regulated species, with sub-sampling if necessary. Up to six tows will be made per trip. Tows will last between approximately 30 minutes and 1 hour, at a speed of between 3–3.5 knots, which conforms to normal fishing operations.

Bycatch and non-target species will be quantified using the "Standardized Bycatch Reporting Methodology" developed as part of the national bycatch initiative. Selectivity by size will be estimated using the ratios of cumulative size distributions from the baseline observer samples to the cumulative size distribution of redfish in NEFSC trawl surveys during the same period. Data will be entered into Excel and uploaded into the DMR biological database (MARVIN) and then transferred to NMFS and other project partners.

The initial experimental fishing activity is scheduled to start in March 2011. Ten experimental fishing days are planned over two trips of 5 days each. This initial phase will be completed by the end of April 2011. Based on the data gathered through this effort, the next 30 experimental fishing days would be allocated among the remaining three quarters of the year. It is possible that, after the initial 10 days, the project partners will decide 4-inch mesh is not ideal, and a larger mesh might be selected for the remaining trials. All experimental fishing activity is scheduled to be complete by April 2012.

If approved, the applicants may request minor modifications and extensions to the EFP throughout the course of research. EFP modifications and extensions may be granted without further public notice if they are deemed essential to facilitate completion of the proposed research and result in only a minimal change in the scope or impacts of the initially approved EFP request.

In accordance with NAO Administrative Order 216–6, a Categorical Exclusion or other appropriate National Environmental Policy Act document would be completed prior to the issuance of the EFP. Further review and consultation may be necessary before a final determination is made to issue the EFP. After publication of this document in the **Federal Register**, the EFP, if approved, may become effective following the public comment period.

Authority: 16 U.S.C. 1801 *et seq.*

Dated: March 3, 2011.

Emily H. Menashes,

Acting Director, Office of Sustainable Fisheries, National Marine Fisheries Service.

[FR Doc. 2011–5236 Filed 3–7–11; 8:45 am]

BILLING CODE 3510–22–P

DEPARTMENT OF DEFENSE

Department of the Navy

Meeting of the Board of Visitors of Marine Corps University

AGENCY: Department of the Navy, DoD.

ACTION: Notice of open meeting.

SUMMARY: The Board of Visitors of the Marine Corps University (BOV MCU) will meet to review, develop and provide recommendations on all aspects of the academic and administrative policies of the University; examine all aspects of professional military education operations; and provide such oversight and advice, as is necessary, to facilitate high educational standards and cost effective operations. The Board will be focusing primarily on the internal procedures of Marine Corps University. All sessions of the meeting will be open to the public.

DATES: The meeting will be held on Friday, April 8, 2011, from 8 a.m. to 5 p.m.

ADDRESSES: The meeting will be held at Marine Corps University President's Conference Room (Hooper Room). The address is: 2076 South Street, Quantico, Virginia 22134.

FOR FURTHER INFORMATION CONTACT: Joel Westa, Director of Academic Support, Marine Corps University Board of Visitors, 2076 South Street, Quantico, Virginia 22134, telephone number 703–784–4037.

Dated: March 1, 2011.

D. J. Werner,

Lieutenant Commander, Judge Advocate General's Corps, U.S. Navy, Federal Register Liaison Officer.

[FR Doc. 2011–5169 Filed 3–7–11; 8:45 am]

BILLING CODE 3810–FF–P

DEPARTMENT OF EDUCATION

Notice of Submission for OMB Review

AGENCY: Department of Education.

ACTION: Comment Request.

SUMMARY: The Director, Information Collection Clearance Division, Regulatory Information Management Services, Office of Management invites comments on the submission for OMB review as required by the Paperwork Reduction Act of 1995 (Pub. L. 104–13).

DATES: Interested persons are invited to submit comments on or before April 7, 2011.

ADDRESSES: Written comments should be addressed to the Office of Information and Regulatory Affairs, Attention: Education Desk Officer, Office of Management and Budget, 725 17th Street, NW., Room 10222, New Executive Office Building, Washington, DC 20503, be faxed to (202) 395–5806 or e-mailed to *oira_submission@omb.eop.gov* with a cc: to *ICDocketMgr@ed.gov.* Please note that written comments received in response to this notice will be considered public records.

SUPPLEMENTARY INFORMATION: Section 3506 of the Paperwork Reduction Act of 1995 (44 U.S.C. Chapter 35) requires that the Office of Management and Budget (OMB) provide interested Federal agencies and the public an early opportunity to comment on information collection requests. The OMB is particularly interested in comments which: (1) Evaluate whether the proposed collection of information is necessary for the proper performance of the functions of the agency, including whether the information will have practical utility; (2) Evaluate the accuracy of the agency's estimate of the burden of the proposed collection of information, including the validity of the methodology and assumptions used; (3) Enhance the quality, utility, and clarity of the information to be collected; and (4) Minimize the burden of the collection of information on those who are to respond, including through the use of appropriate automated, electronic, mechanical, or other technological collection techniques or other forms of information technology.

Dated: March 2, 2011.

Darrin A. King,

Director, Information Collection Clearance Division, Regulatory Information Management Services, Office of Management.

Institute of Education Sciences

Type of Review: Revision.

Title of Collection: Program for the International Assessment of Adult Competencies (PIAAC) 2011–2012 Main Study Data Collection.

OMB Control Number: 1850–0870.

Agency Form Number(s): N/A.

Frequency of Responses: Annually.

Affected Public: Individuals or households.

Total Estimated Number of Annual Responses: 17,277.

Total Estimated Annual Burden Hours: 5,263.

Abstract: The National Center for Education Statistics seeks Office of Management and Budget approval to survey adults (16–65 years old) for the 2011/12 administration of the Program for the International Assessment of Adult Competencies (PIAAC) main data collection. PIAAC is coordinated by the Organization for Economic Cooperation and Development (*http://www.oecd.org/*) and sponsored by the U.S. Departments of Education and Labor in the United States. PIAAC is the Organization for Economic Cooperation and Development's (OECD's) new international household study of adults' literacy, numeracy, and problem-solving in technology-rich environments. It will also survey respondents about their education and employment experience and about the skills they use at work. PIAAC builds on previous international literacy assessments: the 2002 Adult Literacy and Lifeskills Survey and the 1994–98 International Adult Literacy Survey. PIAAC is expected to be on a 10-year cycle. In 2011, 26 countries, including 23 OECD-member countries, plan to participate. The U.S. PIAAC main study will occur between September 2011 and March 2012.

Copies of the information collection submission for OMB review may be accessed from the RegInfo.gov Web site at *http://www.reginfo.gov/public/do/PRAMain* or from the Department's Web site at *http://edicsweb.ed.gov,* by selecting the "Browse Pending Collections" link and by clicking on link number 4531. When you access the information collection, click on "Download Attachments"to view. Written requests for information should be addressed to U.S. Department of Education, 400 Maryland Avenue, SW., LBJ, Washington, DC 20202–4537. Requests may also be electronically mailed to the Internet address *ICDocketMgr@ed.gov* or faxed to 202–401–0920. Please specify the complete title of the information collection and OMB Control Number when making your request.

Individuals who use a telecommunications device for the deaf (TDD) may call the Federal Information Relay Service (FIRS) at 1–800–877–8339.

[FR Doc. 2011–5215 Filed 3–7–11; 8:45 am]

BILLING CODE 4000–01–P

DEPARTMENT OF EDUCATION

Disability and Rehabilitation Research Projects and Centers Program; Field Initiated (FI) Projects; Office of Special Education and Rehabilitative Services; Overview Information; National Institute on Disability and Rehabilitation Research (NIDRR)—Disability and Rehabilitation Research Projects and Centers Program—Field Initiated (FI) Projects

AGENCY: Office of Special Education and Rehabilitative Services, Department of Education.

ACTION: Notice reopening the FI Projects fiscal year (FY) 2011 competition.

Catalog of Federal Domestic Assistance (CFDA) Numbers: 84.133G–1 (Research) and 84.133G–2 (Development).

SUMMARY: On December 6, 2010, we published in the **Federal Register** (75 FR 75666–75671) a notice inviting applications for new awards for the FI Projects FY 2011 competition. That notice established a February 4, 2011 deadline date for eligible applicants to apply for funding under this competition.

The Department of Education announces the reopening of the FI Projects FY 2011 competition. We are establishing a new deadline date for the transmittal of applications for the FY 2011 competition to ensure that potential applicants who were affected by severe winter storms around the time of the original deadline will have sufficient time to prepare and submit their applications. This reopening and extension of the competition is intended to help potential applicants who were affected by severe winter storms compete fairly with other applicants under this competition.

Eligibility: The new deadline date in this notice applies to all eligible applicants for the FI Projects FY 2011 competition (*i.e.,* States; public or private agencies, including for-profit agencies; public or private

organizations, including for-profit organizations; institutions of higher education (IHEs); and Indian Tribes and Tribal organizations), regardless of whether they were affected by severe winter storms. If you have already successfully submitted an application for the FI Projects FY 2011 competition, you may resubmit your application (either with or without revisions). However, if you successfully submitted an application by the original deadline date, you do not need to do so in order to be considered for a grant award under this competition. If you re-submit an application under this reopening notice, the Department will consider the application you submit last provided that it is submitted by the new deadline date.

Deadline for Transmittal of Applications: March 14, 2011.

Note: Applications for grants under this program must be submitted electronically using the Government-wide Grants.gov apply site at *http://www.Grants.gov.* For information (including dates and times) about how to submit your application electronically, or in paper format by mail or hand delivery if you qualify for an exception to the electronic submission requirement, please refer to section IV. 7.

Other Submission Requirements of the December 6, 2010 notice inviting applications for new awards for FI Projects for FY 2011 (75 FR 75666, 75668). We encourage applicants to submit their applications as soon as possible to avoid any problems with filing electronic applications on the last day.

FOR FURTHER INFORMATION CONTACT: Either Lynn Medley or Marlene Spencer as follows: Lynn Medley, U.S. Department of Education, 400 Maryland Avenue, SW., room 5140, PCP, Washington, DC 20202–2700. Telephone: (202) 245–7338 or by e-mail: *Lynn.Medley@ed.gov.* Marlene Spencer, U.S. Department of Education, 400 Maryland Avenue, SW., room 5133, PCP, Washington, DC 20202–2700. Telephone: (202) 245–7532 or by e-mail: *Marlene.Spencer@ed.gov.*

If you use a TDD, call the Federal Relay Service (FRS), toll free, at 1–800–877–8339.

Accessible Format: Individuals with disabilities can obtain this document and a copy of the application package in an accessible format (*e.g.,* braille, large print, audiotape, or computer diskette) by contacting the Grants and Contracts Services Team, U.S. Department of Education, 400 Maryland Avenue, SW., room 5075, PCP, Washington, DC 20202–2550. Telephone: (202) 245–7363. If you use a TDD, call the FRS, toll free, at 1–800–877–8339.

Electronic Access to This Document: You can view this document, as well as all other documents of this Department published in the **Federal Register**, in text or Adobe Portable Document Format (PDF) on the Internet at the following site: *http://www.ed.gov/news/fedregister.* To use PDF you must have Adobe Acrobat Reader, which is available free at this site.

Note: The official version of this document is the document published in the **Federal Register.** Free Internet access to the official edition of the **Federal Register** and the Code of Federal Regulations is available on GPO Access at: *http://www.gpoaccess.gov/nara/index.html.*

Dated: March 3, 2011.

Alexa Posny,

Assistant Secretary for Special Education and Rehabilitative Services.

[FR Doc. 2011–5245 Filed 3–7–11; 8:45 am]

BILLING CODE 4000–01–P

DEPARTMENT OF EDUCATION

National Board for Education Sciences Meeting

AGENCY: Institute of Education Sciences, Department of Education.

ACTION: Notice of an open meeting.

SUMMARY: This notice sets forth the schedule and proposed agenda of an upcoming meeting of the National Board for Education Sciences. The notice also describes the functions of the Board. Notice of this meeting is required by Section 10(a)(2) of the Federal Advisory Committee Act and is intended to notify the public of their opportunity to attend the meeting.

DATES: March 23, 2011.

Time: 8:30 a.m. to 5 p.m.

ADDRESSES: 80 F Street, NW., Room 100, Washington, DC 20208.

FOR FURTHER INFORMATION CONTACT: Mary Grace Lucier, Designated Federal Official, National Board for Education Sciences, 555 New Jersey Ave., NW., Room 602 I, Washington, DC 20208; phone: (202) 219–2253; fax: (202) 219–1466; e-mail: *Mary.Grace.Lucier@ed.gov.*

SUPPLEMENTARY INFORMATION: The National Board for Education Sciences is authorized by Section 116 of the Education Sciences Reform Act of 2002 (ESRA), 20 U.S.C. 9516. The Board advises the Director of the Institute of Education Sciences (IES) on, among other things, the establishment of activities to be supported by the Institute, and on the funding for applications for grants, contracts, and cooperative agreements for research after the completion of peer review, and reviews and evaluates the work of the Institute.

At this time, the Board consists of ten of fifteen appointed members due to the expirations of the terms of former members. The Board shall meet and can carry out official business because the ESRA states that a majority of the voting members serving at the time of a meeting constitutes a quorum.

On March 23, 2011, starting at 8:30 a.m. the Board will approve the agenda and hear remarks from the chair, followed by the swearing in of new members. John Easton, IES director, and the commissioners of the national centers will give an overview of recent developments at IES. A break will take place from 11 a.m. to 11:15 a.m. The Board will then consider the topic, "How Can IES Research/Evaluation Increase the Likelihood of Identifying Interventions that Produce Important Positive Effects? How Can the Policy/Research Community Make Better Use of Well-Designed Studies Showing No Effects or Adverse Effects?" Rebecca Maynard, Commissioner of the National Center for Education Evaluation and Regional Assistance, will give opening remarks, followed by a roundtable discussion by NBES members.

The meeting will break for lunch from 1–2 p.m., which will be followed by ethics training for the members by Marcia Sprague of the Office of the General Counsel at the Department of Education.

At 2 p.m. the Board will address the topic, "Increasing the Effectiveness of Federal Education Programs through Development/Use of Rigorous Evidence About "What Works." An afternoon break from 3:30 to 3:45 p.m. will precede a presentation of a new White House initiative, Advanced Research Projects Agency—Education (ARPA–Ed), designed to catalyze the development and deployment of new tools and technologies that could significantly improve student learning.

At 4:45 p.m. there will be closing remarks and a consideration of next steps from the IES Director and NBES Chair, with adjournment scheduled for 5 p.m.

A final agenda will be available from Mary Grace Lucier (*see* contact information above) on March 15 and will be posted on the Board Web site *http://ies.ed.gov/director/board/agendas/index.asp.*

Individuals who will need accommodations for a disability in order to attend the meeting (*e.g.,* interpreting services, assistance listening devices, or materials in alternative format) should notify Mary Grace Lucier no later than March 15. We will attempt to meet requests for accommodations after this date but cannot guarantee their

availability. The meeting site is accessible to individuals with disabilities.

Records are kept of all Board proceedings and are available for public inspection at 555 New Jersey Ave., NW., Room 602 K, Washington, DC 20208, from the hours of 9 a.m. to 5 p.m., Eastern Standard Time Monday through Friday.

Electronic Access to This Document: You may view this document, as well as all other documents of this Department published in the **Federal Register**, in text or Adobe Portable Document Format (PDF) on the Internet at the following site: *http://www.ed.gov/news/fed-register/index.html.*

To use PDF you must have Adobe Acrobat Reader, which is available free at this site. If you have questions about using PDF, call the U.S. Government Printing Office (GPO), toll free at 1–866–512–1800; or in the Washington, DC area at (202) 512–0000.

Note: The official version of this document is the document published in the **Federal Register**. Free Internet access to the official edition of the **Federal Register** and the Code of Federal Regulations is available on GPO Access at: *http://www.gpoaccess.gov/nara/index.html.*

John Q. Easton,

Director, Institute of Education Sciences.

[FR Doc. 2011–5239 Filed 3–7–11; 8:45 am]

BILLING CODE 4000–01–P

DEPARTMENT OF EDUCATION

Safe Schools/Healthy Students Program; Office of Safe and Drug-Free Schools; Safe Schools/Healthy Students Program; Catalog of Federal Domestic Assistance (CFDA) Numbers: 84.184J and 84.184L

ACTION: Correction; Notice of proposed priorities, requirements, and definitions.

SUMMARY: On February 18, 2011, we published in the **Federal Register** (76 FR 9562) a notice proposing priorities, requirements, and definitions under the Safe Schools/Healthy Students (SS/HS) program. Since publication, however, we have found an error in the notice. We are correcting that error in this notice. Specifically, on page 9569 in the first column under the *Background* section for *Proposed Full Application Requirement 8—Post-Award Requirements'* item number four, the parenthetical phrase "(as defined in this notice)" is deleted as the notice does not propose a definition for social marketing.

FOR FURTHER INFORMATION CONTACT: Karen Dorsey. Telephone: (202) 245–7858 or by e-mail: *Karen.dorsey@ed.gov.*

If you use a telecommunications device for the deaf (TDD), call the Federal Relay Service (FRS), toll free, at 1–800–877–8339.

Accessible Format: Individuals with disabilities can obtain this document in an accessible format (*e.g.,* braille, large print, audiotape, or computer diskette) on request to the program contact person listed under **FOR FURTHER INFORMATION CONTACT**.

Electronic Access to This Document: You can view this document, as well as all other documents of this Department published in the **Federal Register**, in text or Adobe Portable Document Format (PDF) on the Internet at the following site: *http://www.ed.gov/news/fedregister.* To use PDF you must have Adobe Acrobat Reader, which is available free at this site.

Note: The official version of this document is the document published in the **Federal Register**. Free Internet access to the official edition of the **Federal Register** and the Code of Federal Regulations is available on GPO Access at: *http://www.gpoaccess.gov/nara/index.html.*

Dated: March 3, 2011.

Kevin Jennings,

Assistant Deputy Secretary for Safe and Drug-Free Schools.

[FR Doc. 2011–5243 Filed 3–7–11; 8:45 am]

BILLING CODE 4000–01–P

DEPARTMENT OF ENERGY

Federal Energy Regulatory Commission

[Project No. 176–018]

City of Escondido, California, and Vista Irrigation District; Notice of Application Accepted for Filing, Ready for Environmental Analysis, and Soliciting Comments, Motions To Intervene, Protests, Recommendations, and Terms and Conditions

Take notice that the following hydroelectric application has been filed with the Commission and is available for public inspection:

a. *Application Type:* Conduit Exemption.

b. *Project No:* 176–018.

c. *Date Filed:* December 3, 2010.

d. *Applicant:* City of Escondido, California, (Escondido) and Vista Irrigation District (Vista).

e. *Name of Project:* Bear Valley Powerhouse Project.

f. *Location:* On the San Luis Rey River in San Diego County, near Escondido, California. The project occupies 290 acres of Federal lands under the jurisdiction of the U.S. Forest Service and the U.S. Bureau of Land Management. The project also occupies approximately 0.25 acre of Indian reservation lands owned by the La Jolla, San Pasqual, and Rincon Indian Tribes.

g. *Filed Pursuant to:* Federal Power Act 16 U.S.C. 791a–825r).

h. *Applicant Contact:* Donald R. Lincoln, Special Counsel for the City of Escondido, Endeman, Lincoln, Turek & Heater, LLP, 600 "B" Street, Suite 2400, San Diego, CA 92101–4582, (619) 544–0123; and Don A. Smith, Director of Water Resources, Vista Irrigation District, 1391 Engineer Street, Vista, CA 92081, (207) 945–5621.

i. *FERC Contact:* Carolyn Templeton, (202) 502–8785, or *carolyn.templeton@ferc.gov.*

j. This application has been accepted for filing and is now ready for environmental analysis.

k. Deadline for filing comments, motions to intervene, protests, recommendations, and terms and conditions: 60 days from the issuance date of this notice; reply comments are due 105 days from the issuance date of this notice.

All documents may be filed electronically via the Internet. *See* 18 CFR 385.2001(a)(1)(iii) and the instructions on the Commission's Web site *http://www.ferc.gov/docs-filing/efiling.asp.* Commenters can submit brief comments up to 6,000 characters, without prior registration, using the eComment system at *http://www.ferc.gov/docs-filing/ecomment.asp.* You must include your name and contact information at the end of your comments. For assistance, please contact FERC Online Support at *FERCOnlineSupport@ferc.gov* or toll free at 1–866–208–3676, or for TTY, (202) 502–8659. Although the Commission strongly encourages electronic filing, documents may also be paper-filed. To paper-file, mail an original and seven copies to: Kimberly D. Bose, Secretary, Federal Energy Regulatory Commission, 888 First Street, NE., Washington, DC 20426. Please include the project number (P–176–018) on any documents filed.

The Commission's Rules of Practice require all intervenors filing documents with the Commission to serve a copy of that document on each person on the official service list for the project. Further, if an intervenor files comments or documents with the Commission relating to the merits of an issue that may affect the responsibilities of a particular resource agency, they must

also serve a copy of the document on that resource agency.

l. *Description of Project:* Escondido and Vista are the joint current owners and operators of the currently licensed Escondido Hydroelectric Project facilities and hold the current Commission license for the Escondido Hydroelectric Project. The primary purpose of the project has historically been for water delivery for consumptive purposes, including agricultural and municipal-industrial uses.

The most upstream component of the Escondido Hydroelectric Project is the Escondido canal diversion dam, a concrete structure located on the San Luis Rey River within the La Jolla Indian Reservation approximately 10 miles downstream from Lake Henshaw. The dam diverts San Luis Rey River water into the 13.6-mile-long Escondido canal that extends from a diversion dam to Lake Wohlford. The canal traverses the La Jolla, Rincon, and San Pasqual Indian reservations, as well as other Federal and private lands. Historically, the canal has delivered 10 to 15 percent of the waters diverted into the Escondido canal to the Rincon Indian Reservation. Lake Wohlford stores the water obtained from the San Luis Rey River and Escondido Creek watersheds, which is then used consumptively by Escondido and Vista. Water is delivered from Lake Wohlford through a 4,022-foot-long penstock through the Bear Valley powerhouse or bypasses the powerhouse. The powerhouse location takes advantage of the 495 feet of elevation drop from Lake Wohlford to the water delivery point. From the Bear Valley powerhouse, water is delivered via underground conduits to Escondido's water treatment plant. From the treatment plant, water is distributed for consumptive uses on a prorated basis into the distribution systems of both Escondido and Vista.

The hydroelectric generation component of the water conveyance system consists of the existing Bear Valley powerhouse, which has a nameplate generation capacity of 1.5 megawatt. The powerhouse consists of two 1,010-horsepower impulse turbines and two 750 kilowatt (kW) generators which operate at a gross head of 495 feet. Two 16-inch submerged sleeve valves allow for water delivery from the Project when it is necessary to bypass the turbines due to maintenance or other operational constraints. The average annual production was 4,903,000 kilowatt-hours (kWh) per year for fiscal year 1987 through 2006. The capacity and energy is sold to San Diego Gas & Electric Company (at avoided cost rates).

In a concurrent filing, the applicants have filed an application for surrender of the remaining facilities of the Escondido Hydroelectric Project.

m. A copy of the application is available for review at the Commission in the Public Reference Room or may be viewed on the Commission's Web site at *http://www.ferc.gov* using the "eLibrary" link. Enter the docket number excluding the last three digits in the docket number field to access the document. For assistance, contact FERC Online Support. A copy is also available for inspection and reproduction at the address in item (h) above.

You may also register online at *http://www.ferc.gov/docs-filing/esubscription.asp* to be notified via e-mail of new filings and issuances related to this or other pending projects. For assistance, contact FERC Online Support.

p. Protests or Motions to Intervene—Anyone may submit a protest or a motion to intervene in accordance with the requirements of Rules of Practice and Procedure, 18 CFR 385.210, 385.211, and 385.214. In determining the appropriate action to take, the Commission will consider all protests filed, but only those who file a motion to intervene in accordance with the Commission's Rules may become a party to the proceeding. Any protests or motions to intervene must be received on or before the specified deadline date for the particular application.

q. All filings must (1) bear in all capital letters the title "PROTEST," "MOTION TO INTERVENE," "COMMENTS," "REPLY COMMENTS," "RECOMMENDATIONS," or "TERMS AND CONDITIONS;" (2) set forth in the heading the name of the applicant and the project number of the application to which the filing responds; (3) furnish the name, address, and telephone number of the person protesting or intervening; and (4) otherwise comply with the requirements of 18 CFR 385.2001 through 385.2005. All comments, recommendations, or terms and conditions must set forth their evidentiary basis and otherwise comply with the requirements of 18 CFR 4.34(b). Agencies may obtain copies of the application directly from the applicant. Any of these documents must be filed by providing the original and eight copies to: The Secretary, Federal Energy Regulatory Commission, 888 First Street, NE., Washington, DC 20426. An additional copy must be sent to Director, Division of Hydropower Administration and Compliance, Office of Energy Projects, Federal Energy Regulatory Commission, at the above address. A copy of any protest or motion to intervene must be served upon each representative of the applicant specified in the particular application. A copy of all other filings in reference to this application must be accompanied by proof of service on all persons listed in the service list prepared by the Commission in this proceeding, in accordance with 18 CFR 4.34(b) and 385.2010.

r. With this notice, we are initiating consultation with the California State Historic Preservation Officer, as required by section 106 of the National Historic Preservation Act, and the regulations of the Advisory Council on Historic Preservation, 36 CFR 800.4.

Dated: March 1, 2011.

Kimberly D. Bose,

Secretary.

[FR Doc. 2011–5210 Filed 3–7–11; 8:45 am]

BILLING CODE 6717–01–P

DEPARTMENT OF ENERGY

Federal Energy Regulatory Commission

[Project No. 176–035]

City of Escondido, CA, and Vista Irrigation District; Notice of Application Accepted for Filing, Ready for Environmental Analysis, and Soliciting Comments, Motions To Intervene, and Protests

Take notice that the following hydroelectric application has been filed with the Commission and is available for public inspection:

a. *Application Type:* Surrender of License.

b. *Project No:* 176–035.

c. *Date Filed:* December 3, 2010.

d. *Applicant:* City of Escondido, California (Escondido) and Vista Irrigation District (Vista).

e. *Name of Project:* Escondido Hydroelectric Project.

f. *Location:* On the San Luis Rey River in San Diego County, near Escondido, California. The project occupies 290 acres of Federal lands under the jurisdiction of the U.S. Forest Service and the U.S. Bureau of Land Management. The project also occupies 66 acres of Indian reservation lands owned by the La Jolla, San Pasqual, and Rincon Indian Tribes.

g. *Filed Pursuant to:* Federal Power Act, 16 U.S.C. 791a–825r (2006).

h. *Applicant Contact:* Donald R. Lincoln, Special Counsel for the City of Escondido, Endeman, Lincoln, Turek & Heater, LLP, 600 "B" Street, Suite 2400, San Diego, CA 92101–4582, (619) 544–0123; and Don A. Smith, Director of

Water Resources, Vista Irrigation District, 1391 Engineer Street, Vista, CA 92081, (207) 945–5621.

i. *FERC Contact:* Carolyn Templeton, (202) 502–8785, or *carolyn.templeton@ferc.gov.*

j. This application has been accepted for filing and is now ready for environmental analysis.

k. *Deadline for filing comments, motions to intervene, protests, recommendations, and terms and conditions:* 60 days from the issuance date of this notice; reply comments are due 105 days from the issuance date of this notice.

All documents may be filed electronically via the Internet. *See* 18 CFR 385.2001(a)(1)(iii) and the instructions on the Commission's Web site *http://www.ferc.gov/docs-filing/efiling.asp.* Commenters can submit brief comments up to 6,000 characters, without prior registration, using the eComment system at *http://www.ferc.gov/docs-filing/ecomment.asp.* You must include your name and contact information at the end of your comments. For assistance, please contact FERC Online Support at *FERCOnlineSupport@ferc.gov* or toll free at 1–866–208–3676, or for TTY, (202) 502–8659. Although the Commission strongly encourages electronic filing, documents may also be paper-filed. To paper-file, mail an original and seven copies to: Kimberly D. Bose, Secretary, Federal Energy Regulatory Commission, 888 First Street, NE., Washington, DC 20426. Please include the project number (P–176–035) on any comments, motions, or protests filed.

l. *Description of Surrender:* Escondido and Vista would surrender the following project facilities: (1) Two storage reservoirs (Lake Henshaw on San Luis Rey River and Lake Wohlford on Escondido Creek) with a combined storage capacity of approximately 58,000 acre-feet; (2) one diversion dam on the San Luis Rey River; (3) four primary water conduits (Upper Escondido Canal—5.93 miles; Rincon Penstock—0.4 mile; Lower Escondido Canal—7.72 miles; and Wohlford Penstock—0.76 mile); (4) the Rincon powerhouse; (5) public recreation facilities at Lake Henshaw and Lake Wohlford; and (6) appurtenant facilities and features. The Escondido Hydroelectric Project extends from Lake Henshaw at an elevation of about 2,700 feet to Bear Valley Powerhouse at an elevation of 750 feet. The Escondido canal currently consists of approximately 58,404 feet of gunite-lined canal; 3,567 feet of tunnel; 670 feet of metal flume; 2,156 feet of inverted siphon; and 6,118 feet of pipeline.

In a concurrent filing, Escondido and Vista have filed an application for a conduit exemption for the Bear Valley Powerhouse that is part of the Escondido Hydroelectric Project. The Bear Valley powerhouse is the only portion of the Escondido Hydroelectric Project that is a power generation facility.

m. A copy of the application is available for review at the Commission in the Public Reference Room or may be viewed on the Commission's Web site at *http://www.ferc.gov* using the "eLibrary" link. Enter the docket number excluding the last three digits in the docket number field to access the document. For assistance, contact FERC Online Support. A copy is also available for inspection and reproduction at the address in item (h) above.

You may also register online at *http://www.ferc.gov/docs-filing/esubscription.asp* to be notified via e-mail of new filings and issuances related to this or other pending projects. For assistance, contact FERC Online Support.

o. Protests or Motions to Intervene—Anyone may submit a protest or a motion to intervene in accordance with the requirements of Rules of Practice and Procedure, 18 CFR 385.210, 385.211, and 385.214. In determining the appropriate action to take, the Commission will consider all protests filed, but only those who file a motion to intervene in accordance with the Commission's Rules may become a party to the proceeding. Any protests or motions to intervene must be received on or before the specified deadline date for the particular application.

p. All filings must (1) bear in all capital letters the title "PROTEST," "MOTION TO INTERVENE," "COMMENTS," or "REPLY COMMENTS;" (2) set forth in the heading the name of the applicant and the project number of the application to which the filing responds; (3) furnish the name, address, and telephone number of the person protesting or intervening; and (4) otherwise comply with the requirements of 18 CFR 385.2001 through 385.2005. All comments, motions to intervene, or protests must set forth their evidentiary basis and otherwise comply with the requirements of 18 CFR 4.34(b). All comments, motions to intervene, or protests should relate to project works which are the subject of the license surrender. Agencies may obtain copies of the application directly from the applicant. Any of these documents must be filed by providing the original and eight copies to: The Secretary, Federal Energy Regulatory Commission, 888 First Street, NE., Washington, DC 20426. An additional copy must be sent to Director, Division of Hydropower Administration and Compliance, Office of Energy Projects, Federal Energy Regulatory Commission, at the above address. A copy of any protest or motion to intervene must be served upon each representative of the applicant specified in the particular application. A copy of all other filings in reference to this application must be accompanied by proof of service on all persons listed in the service list prepared by the Commission in this proceeding, in accordance with 18 CFR 4.34(b) and 385.2010.

q. With this notice, we are initiating consultation with the California State Historic Preservation Officer, as required by section 106 of the National Historic Preservation Act, and the regulations of the Advisory Council on Historic Preservation, 36 CFR 800.4.

Dated: March 1, 2011.

Kimberly D. Bose,

Secretary.

[FR Doc. 2011–5205 Filed 3–7–11; 8:45 am]

BILLING CODE 6717–01–P

DEPARTMENT OF ENERGY

Federal Energy Regulatory Commission

[Docket No. CP11–98–000]

Northern Natural Gas Company; Notice of Application

Take notice that on February 18, 2011, Northern Natural Gas Company (Northern), 1111 South 103 Street, Omaha, Nebraska 68124–1000, filed in Docket No. CP11–98–000, an application pursuant to section 7(b) of the Natural Gas Act (NGA) and Part 157 of the Commission's regulations, requesting authorization to abandon in place three horizontal compressor units at its Sunray Compressor Station and associated piping located in Moore County, Texas, all as more fully set forth in the application which is on file with the Commission and open to public inspection. This filing may also be viewed on the Commission's Web site at *http://www.ferc.gov* using the "eLibrary" link. Enter the docket number, excluding the last three digits, in the docket number field to access the document. For assistance, call (866) 208–3676 or TTY, (202) 502–8659.

Any questions regarding this application should be directed to Michael T. Loeffler, Senior Director,

Certificates and External Affairs, Northern Natural Gas Company, P.O. Box 3330, Omaha, Nebraska 68103–0330, or by calling (402) 398–7103 (telephone) or (402) 398–7592 (fax), *mike.loeffler@nngco.com*, or to Dari R. Dornan, Senior Counsel, Northern Natural Gas Company, P.O. Box 3330, Omaha, Nebraska 68103–0330, or by calling (402) 398–7077 (telephone) or (402) 398–7426 (fax), *dari.dornan@nngco.com.*

Pursuant to section 157.9 of the Commission's rules, 18 CFR 157.9, within 90 days of this Notice the Commission staff will either: complete its environmental assessment (EA) and place it into the Commission's public record (eLibrary) for this proceeding, or issue a Notice of Schedule for Environmental Review. If a Notice of Schedule for Environmental Review is issued, it will indicate, among other milestones, the anticipated date for the Commission staff's issuance of the final environmental impact statement (FEIS) or EA for this proposal. The filing of the EA in the Commission's public record for this proceeding or the issuance of a Notice of Schedule for Environmental Review will serve to notify Federal and State agencies of the timing for the completion of all necessary reviews, and the subsequent need to complete all Federal authorizations within 90 days of the date of issuance of the Commission staff's FEIS or EA.

There are two ways to become involved in the Commission's review of this project. First, any person wishing to obtain legal status by becoming a party to the proceedings for this project should, on or before the comment date stated below, file with the Federal Energy Regulatory Commission, 888 First Street, NE., Washington, DC 20426, a motion to intervene in accordance with the requirements of the Commission's Rules of Practice and Procedure (18 CFR 385.214 or 385.211) and the Regulations under the NGA (18 CFR 157.10). A person obtaining party status will be placed on the service list maintained by the Secretary of the Commission and will receive copies of all documents filed by the applicant and by all other parties. A party must submit 14 copies of filings made with the Commission and must mail a copy to the applicant and to every other party in the proceeding. Only parties to the proceeding can ask for court review of Commission orders in the proceeding.

However, a person does not have to intervene in order to have comments considered. The second way to participate is by filing with the Secretary of the Commission, as soon as possible, an original and two copies of comments in support of or in opposition to this project. The Commission will consider these comments in determining the appropriate action to be taken, but the filing of a comment alone will not serve to make the filer a party to the proceeding. The Commission's rules require that persons filing comments in opposition to the project provide copies of their protests only to the party or parties directly involved in the protest.

Persons who wish to comment only on the environmental review of this project should submit an original and two copies of their comments to the Secretary of the Commission. Environmental commenters will be placed on the Commission's environmental mailing list, will receive copies of the environmental documents, and will be notified of meetings associated with the Commission's environmental review process. Environmental commenters will not be required to serve copies of filed documents on all other parties. However, the non-party commenters will not receive copies of all documents filed by other parties or issued by the Commission (except for the mailing of environmental documents issued by the Commission) and will not have the right to seek court review of the Commission's final order.

Motions to intervene, protests and comments may be filed electronically via the Internet in lieu of paper; *see*, 18 CFR 385.2001(a)(1)(iii) and the instructions on the Commission's Web site under the "e-Filing" link. The Commission strongly encourages electronic filings.

Comment Date: March 22, 2011.

Dated: March 1, 2011.

Kimberly D. Bose,

Secretary.

[FR Doc. 2011–5206 Filed 3–7–11; 8:45 am]

BILLING CODE 6717–01–P

DEPARTMENT OF ENERGY

Federal Energy Regulatory Commission

[Project No. 2165–029]

Alabama Power Company; Notice of Availability of Environmental Assessment

In accordance with the National Environmental Policy Act of 1969 and the Federal Energy Regulatory Commission's regulations, 18 CFR part 380, the Office of Energy Projects has reviewed an application filed by Alabama Power Company on June 5, 2009, requesting Commission approval to permit Mr. Lynn Layton (permittee) to construct and operate three covered 10-slip boat docks and a concrete patio at Cushman's Marina, located on the Lewis Smith Development of the Warrior River Project (FERC No. 2165). The Lewis Smith Development is located on the headwaters of the Black Warrior River on the Sipsey Fork in Cullman, Walker, and Winston Counties, Alabama, and occupies 2,691.44 acres of Federal lands administered by the U.S. Forest Service. An environmental assessment (EA) has been prepared as a part of Commission staff's review. The EA evaluates the environmental impacts that would result from approving the licensee's proposal and alternatives, and finds that approval of the application would not constitute a major Federal action significantly affecting the quality of the human environment.

A copy of the EA is on file with the Commission and is available for public inspection. The EA may also be viewed on the Commission's Web site at *http://www.ferc.gov* using the "eLibrary" link. Enter the docket number (P–2165) excluding the last three digits in the docket number field to access the document. For assistance, contact FERC Online Support at *FERCOnlineSupport@ferc.gov* or toll-free at 1–866–208–3676, or for TTY, (202) 502–8659.

Any comments should be filed by March 31, 2011. Comments may be filed electronically via Internet in lieu of paper. The Commission strongly encourages electronic filings. *See* 18 CFR 385.2001(a)(1)(iii) and the instructions on the Commission's Web site under the "eFiling" link. To paper-file, comments should be addressed to Kimberly D. Bose, Secretary, Federal Energy Regulatory Commission, 888 First Street, NE., Room 1–A, Washington, DC 20426. Please reference the project name and project number (P–2165) on all comments.

For further information, contact Mark Carter at (678) 245–3083.

Dated: March 1, 2011.

Kimberly D. Bose,

Secretary.

[FR Doc. 2011–5204 Filed 3–7–11; 8:45 am]

BILLING CODE 6717–01–P

DEPARTMENT OF ENERGY

Federal Energy Regulatory Commission

Combined Notice of Filings #1

Take notice that the Commission received the following electric rate filings:

Docket Numbers: ER08–1281–008.
Applicants: New York Independent System Operator, Inc.
Description: Report of New York Independent System Operator, Inc., submits additional loop flow-related analysis and data supporting studies.
Filed Date: 02/28/2011.
Accession Number: 20110228–5274.
Comment Date: 5 p.m. Eastern Time on Monday, March 21, 2011.

Docket Numbers: ER11–2962–000.
Applicants: Tropicana Manufacturing Company Inc.
Description: Tropicana Manufacturing Company Inc. submits tariff filing per 35.12: Application for Market Based Rate Authority to be effective 2/28/2011.
Filed Date: 02/28/2011.
Accession Number: 20110228–5172.
Comment Date: 5 p.m. Eastern Time on Monday, March 21, 2011.

Docket Numbers: ER11–2963–000.
Applicants: Green Mountain Energy Company.
Description: Green Mountain Energy Company submits tariff filing per 35.15: Cancellation of MBR Tariff to be effective 3/1/2011.
Filed Date: 02/28/2011.
Accession Number: 20110228–5181.
Comment Date: 5 p.m. Eastern Time on Monday, March 21, 2011.

Docket Numbers: ER11–2964–000.
Applicants: Tampa Electric Company.
Description: Tampa Electric Company submits tariff filing per 35.13(a)(2)(iii): Rate Schedule No. 96 with Seminole Electric Cooperative Inc. to be effective 2/28/2011.
Filed Date: 02/28/2011.
Accession Number: 20110228–5188.
Comment Date: 5 p.m. Eastern Time on Monday, March 21, 2011.

Docket Numbers: ER11–2965–000.
Applicants: NAEA Energy Massachusetts LLC.
Description: NAEA Energy Massachusetts LLC submits tariff filing per 35.37: NAEA Energy Massachusetts, LLC to be effective 8/6/2010.
Filed Date: 02/28/2011.
Accession Number: 20110228–5198.
Comment Date: 5 p.m. Eastern Time on Monday, March 21, 2011.

Docket Numbers: ER11–2966–000.
Applicants: Pacific Gas and Electric Company.
Description: Pacific Gas and Electric Company submits tariff filing per 35.13(a)(2)(iii): CCSF IA—2011 Annual Adjustment to Traffic Light Costs to be effective 2/1/2011.
Filed Date: 02/28/2011.
Accession Number: 20110228–5208.
Comment Date: 5 p.m. Eastern Time on Monday, March 21, 2011.

Docket Numbers: ER11–2967–000.
Applicants: Lakewood Cogeneration Limited Partnership.
Description: Lakewood Cogeneration Limited Partnership submits tariff filing per 35.37: Lakewood Cogeneration Limited Partnership to be effective 8/11/2010.
Filed Date: 02/28/2011.
Accession Number: 20110228–5213.
Comment Date: 5 p.m. Eastern Time on Monday, March 21, 2011.

Docket Numbers: ER11–2968–000.
Applicants: NAEA Ocean Peaking Power, LLC.
Description: NAEA Ocean Peaking Power, LLC submits tariff filing per 35.37: NAEA Ocean Peaking Power, LLC to be effective 8/6/2010.
Filed Date: 02/28/2011.
Accession Number: 20110228–5216.
Comment Date: 5 p.m. Eastern Time on Monday, March 21, 2011.

Docket Numbers: ER11–2969–000.
Applicants: NAEA Rock Springs, LLC.
Description: NAEA Rock Springs, LLC submits tariff filing per 35.37: NAEA Rock Springs, LLC to be effective 8/6/2010.
Filed Date: 02/28/2011.
Accession Number: 20110228–5219.
Comment Date: 5 p.m. Eastern Time on Monday, March 21, 2011.

Docket Numbers: ER11–2970–000.
Applicants: Peetz Logan Interconnect, LLC.
Description: Peetz Logan Interconnect, LLC submits tariff filing per 35.1: Peetz Logan Interconnect, LLC OATT to be effective 3/1/2011.
Filed Date: 02/28/2011.
Accession Number: 20110228–5232.
Comment Date: 5 p.m. Eastern Time on Monday, March 21, 2011.

Docket Numbers: ER11–2971–000.
Applicants: Tampa Electric Company.
Description: Tampa Electric Company submits tariff filing per 35.13(a)(2)(iii): Rate Schedule No. 94 with Progress Energy Florida to be effective 2/28/2011.
Filed Date: 02/28/2011.
Accession Number: 20110228–5245.
Comment Date: 5 p.m. Eastern Time on Monday, March 21, 2011.

Docket Numbers: ER11–2972–000.
Applicants: New England Power Pool Participants Committee.
Description: New England Power Pool Participants Committee submits tariff filing per 35.13(a)(2)(iii): March 2011 Membership Filing to be effective 2/1/2011.
Filed Date: 02/28/2011.
Accession Number: 20110228–5249.
Comment Date: 5 p.m. Eastern Time on Monday, March 21, 2011.

Any person desiring to intervene or to protest in any of the above proceedings must file in accordance with Rules 211 and 214 of the Commission's Rules of Practice and Procedure (18 CFR 385.211 and 385.214) on or before 5 p.m. Eastern time on the specified comment date. It is not necessary to separately intervene again in a subdocket related to a compliance filing if you have previously intervened in the same docket. Protests will be considered by the Commission in determining the appropriate action to be taken, but will not serve to make protestants parties to the proceeding. Anyone filing a motion to intervene or protest must serve a copy of that document on the Applicant. In reference to filings initiating a new proceeding, interventions or protests submitted on or before the comment deadline need not be served on persons other than the Applicant.

As it relates to any qualifying facility filings, the notices of self-certification [or self-recertification] listed above, do not institute a proceeding regarding qualifying facility status. A notice of self-certification [or self-recertification] simply provides notification that the entity making the filing has determined the facility named in the notice meets the applicable criteria to be a qualifying facility. Intervention and/or protest do not lie in dockets that are qualifying facility self-certifications or self-recertifications. Any person seeking to challenge such qualifying facility status may do so by filing a motion pursuant to 18 CFR 292.207(d)(iii). Intervention and protests may be filed in response to notices of qualifying facility dockets other than self-certifications and self-recertifications.

The Commission encourages electronic submission of protests and interventions in lieu of paper, using the FERC Online links at *http://www.ferc.gov.* To facilitate electronic service, persons with Internet access who will eFile a document and/or be listed as a contact for an intervenor must create and validate an eRegistration account using the eRegistration link. Select the eFiling link to log on and submit the intervention or protests.

Persons unable to file electronically should submit an original and 14 copies of the intervention or protest to the Federal Energy Regulatory Commission,

888 First St. NE., Washington, DC 20426.

The filings in the above proceedings are accessible in the Commission's eLibrary system by clicking on the appropriate link in the above list. They are also available for review in the Commission's Public Reference Room in Washington, DC. There is an eSubscription link on the Web site that enables subscribers to receive e-mail notification when a document is added to a subscribed dockets(s). For assistance with any FERC Online service, please e-mail *FERCOnlineSupport@ferc.gov* or call (866) 208–3676 (toll free). For TTY, call (202) 502–8659.

Dated: March 1, 2011.

Nathaniel J. Davis, Sr.,

Deputy Secretary.

[FR Doc. 2011–5134 Filed 3–7–11; 8:45 am]

BILLING CODE 6717–01–P

DEPARTMENT OF ENERGY

Federal Energy Regulatory Commission

Combined Notice of Filings #1

Take notice that the Commission received the following electric rate filings:

Docket Numbers: ER11–2090–001, ER11–2091–001, ER11–2092–001, ER11–2094–001, ER11–2095–001

Applicants: Duke Energy Vermillion II, LLC, Duke Energy Hanging Rock II, LLC, Duke Energy Lee II, LLC, Duke Energy Fayette II, LLC, Duke Energy Washington II, LLC

Description: Request for Waiver of Duke Energy Hanging Rock II, LLC, *et al.*

Filed Date: 02/23/2011

Accession Number: 20110223–5194

Comment Date: 5 p.m. Eastern Time on Monday, March 7, 2011

Docket Numbers: ER11–2427–001

Applicants: ISO New England Inc.

Description: ISO New England Inc. submits tariff filing per 35: Conforming Tariff Record for PER Section 13.7 to be effective 12/22/2010.

Filed Date: 02/25/2011

Accession Number: 20110225–5073

Comment Date: 5 p.m. Eastern Time on Friday, March 18, 2011

Docket Numbers: ER11–2952–000

Applicants: Central Maine Power Company

Description: Central Maine Power Company submits tariff filing per 35.1: Central Maine Power Co.—Filing of Rocky Gorge Corp. Interconnection Agreement to be effective 2/25/2011.

Filed Date: 02/25/2011

Accession Number: 20110225–5141

Comment Date: 5 p.m. Eastern Time on Friday, March 18, 2011

Docket Numbers: ER11–2953–000

Applicants: New York Independent System Operator, Inc.

Description: New York Independent System Operator, Inc. submits tariff filing per 35.13(a)(2)(iii: LGIA Among NYISO, NYSEG and Howard Wind to be effective 2/11/2011.

Filed Date: 02/25/2011

Accession Number: 20110225–5142

Comment Date: 5 p.m. Eastern Time on Friday, March 18, 2011

Docket Numbers: ER11–2954–000

Applicants: DTE Calvert City, LLC

Description: DTE Calvert City, LLC submits tariff filing per 35.12: Market-Based Rate Initial Tariff Baseline to be effective 2/28/2011.

Filed Date: 02/25/2011

Accession Number: 20110225–5144

Comment Date: 5 p.m. Eastern Time on Friday, March 18, 2011

Docket Numbers: ER11–2955–000

Applicants: Louisville Gas and Electric Company

Description: Louisville Gas and Electric Company submits tariff filing per 35.13(a)(1): 02_25_11 Attach O ITO_RC to be effective 4/26/2011.

Filed Date: 02/25/2011

Accession Number: 20110225–5145

Comment Date: 5 p.m. Eastern Time on Friday, March 18, 2011

Docket Numbers: ER11–2956–000

Applicants: Central Maine Power Company

Description: Central Maine Power Company submits tariff filing per 35.13(a)(2)(iii: Central Maine Power Company—Filing of Gallop Power Interconnection Agreement to be effective 2/25/2011.

Filed Date: 02/25/2011

Accession Number: 20110225–5150

Comment Date: 5 p.m. Eastern Time on Friday, March 18, 2011

Docket Numbers: ER11–2957–000

Applicants: Southwest Power Pool, Inc.

Description: Southwest Power Pool, Inc.'s Submission of Notice of Cancellation of Large Generator Interconnection Agreement.

Filed Date: 02/25/2011

Accession Number: 20110225–5175

Comment Date: 5 p.m. Eastern Time on Friday, March 18, 2011

Docket Numbers: ER11–2958–000

Applicants: FirstEnergy Solutions Corp.

Description: FirstEnergy Solutions Corp. Transfer of Revenue Requirement for Reactive Power Service in connection with the integration of American Transmission Systems, Inc.'s transmission facilities into PJM.

Filed Date: 02/25/2011

Accession Number: 20110225–5177

Comment Date: 5 p.m. Eastern Time on Friday, March 18, 2011

Docket Numbers: ER11–2959–000

Applicants: February Futures, LLC

Description: February Futures, LLC submits tariff filing per 35.15: February Futures FERC Electric Tariff Cancellation to be effective 3/1/2011.

Filed Date: 02/28/2011

Accession Number: 20110228–5103

Comment Date: 5 p.m. Eastern Time on Monday, March 21, 2011

Docket Numbers: ER11–2960–000

Applicants: Pacific Gas and Electric Company

Description: Pacific Gas and Electric Company submits tariff filing per 35.13(a)(2)(iii: Corrections to PG&E's Wholesale Distribution Tariff to be effective 4/28/2010.

Filed Date: 02/28/2011

Accession Number: 20110228–5122

Comment Date: 5 p.m. Eastern Time on Monday, March 21, 2011

Docket Numbers: ER11–2961–000

Applicants: Florida Power Corporation

Description: Florida Power Corporation submits tariff filing per 35.13(a)(2)(iii: Rate Schedule No. 216 of Florida Power Corporation to be effective 2/28/2011.

Filed Date: 02/28/2011

Accession Number: 20110228–5123

Comment Date: 5 p.m. Eastern Time on Monday, March 21, 2011

Any person desiring to intervene or to protest in any of the above proceedings must file in accordance with Rules 211 and 214 of the Commission's Rules of Practice and Procedure (18 CFR 385.211 and 385.214) on or before 5 p.m. Eastern time on the specified comment date. It is not necessary to separately intervene again in a subdocket related to a compliance filing if you have previously intervened in the same docket. Protests will be considered by the Commission in determining the appropriate action to be taken, but will not serve to make protestants parties to the proceeding. Anyone filing a motion to intervene or protest must serve a copy of that document on the Applicant. In reference to filings initiating a new proceeding, interventions or protests submitted on or before the comment deadline need not be served on persons other than the Applicant.

As it relates to any qualifying facility filings, the notices of self-certification [or self-recertification] listed above, do not institute a proceeding regarding qualifying facility status. A notice of

self-certification [or self-recertification] simply provides notification that the entity making the filing has determined the facility named in the notice meets the applicable criteria to be a qualifying facility. Intervention and/or protest do not lie in dockets that are qualifying facility self-certifications or self-recertifications. Any person seeking to challenge such qualifying facility status may do so by filing a motion pursuant to 18 CFR 292.207(d)(iii). Intervention and protests may be filed in response to notices of qualifying facility dockets other than self-certifications and self-recertifications.

The Commission encourages electronic submission of protests and interventions in lieu of paper, using the FERC Online links at *http://www.ferc.gov.* To facilitate electronic service, persons with Internet access who will eFile a document and/or be listed as a contact for an intervenor must create and validate an eRegistration account using the eRegistration link. Select the eFiling link to log on and submit the intervention or protests.

Persons unable to file electronically should submit an original and 14 copies of the intervention or protest to the Federal Energy Regulatory Commission, 888 First St., NE., Washington, DC 20426.

The filings in the above proceedings are accessible in the Commission's eLibrary system by clicking on the appropriate link in the above list. They are also available for review in the Commission's Public Reference Room in Washington, DC. There is an eSubscription link on the Web site that enables subscribers to receive e-mail notification when a document is added to a subscribed docket(s). For assistance with any FERC Online service, please e-mail *FERCOnlineSupport@ferc.gov* or call (866) 208–3676 (toll free). For TTY, call (202) 502–8659.

Dated: February 28, 2011.

Nathaniel J. Davis, Sr.,

Deputy Secretary.

[FR Doc. 2011–5135 Filed 3–7–11; 8:45 am]

BILLING CODE 6717–01–P

DEPARTMENT OF ENERGY

Federal Energy Regulatory Commission

Combined Notice of Filings #2

Take notice that the Commission received the following electric rate filings:

Docket Numbers: ER10–3355–001
Applicants: Entergy Arkansas, Inc.
Description: Entergy Arkansas, Inc. submits tariff filing per 35.17(b): Amendment to Conway Revised Agreements to be effective 1/1/2011.
Filed Date: 03/01/2011.
Accession Number: 20110301–5132
Comment Date: 5 p.m. Eastern Time on Tuesday, March 22, 2011

Docket Numbers: ER10–3356–002
Applicants: Entergy Arkansas, Inc.
Description: Entergy Arkansas, Inc. submits tariff filing per 35.17(b): Amendment to West Memphis Agreements to be effective 1/1/2011.
Filed Date: 03/01/2011
Accession Number: 20110301–5163
Comment Date: 5 p.m. Eastern Time on Tuesday, March 22, 2011

Docket Numbers: ER11–2046–001
Applicants: MATEP LLC
Description: MATEP LLC submits tariff filing per 35: MATEP LLC Substitute First Revised MBR Tariff to be effective 3/2/2011.
Filed Date: 03/01/2011
Accession Number: 20110301–5090
Comment Date: 5 p.m. Eastern Time on Tuesday, March 22, 2011

Docket Numbers: ER11–2047–001
Applicants: MATEP Limited Partnership
Description: MATEP Limited Partnership submits tariff filing per 35: MATEP LP Substitute First Revised MBR Tariff to be effective 3/2/2011.
Filed Date: 03/01/2011
Accession Number: 20110301–5093
Comment Date: 5 p.m. Eastern Time on Tuesday, March 22, 2011

Docket Numbers: ER11–2382–001
Applicants: NorthWestern Corporation
Description: NorthWestern Corporation submits tariff filing per 35: Compliance Filing for Late-Filed Agreements to be effective 2/14/2011.
Filed Date: 02/28/2011
Accession Number: 20110228–5116
Comment Date: 5 p.m. Eastern Time on Monday, March 21, 2011

Docket Numbers: ER11–2753–001
Applicants: Cedar Point Wind, LLC
Description: Cedar Point Wind, LLC submits tariff filing per 35.17(b): Revised Application for MBR and MBR Tariffs to be effective 4/1/2011.
Filed Date: 02/28/2011
Accession Number: 20110228–5154
Comment Date: 5 p.m. Eastern Time on Monday, March 21, 2011

Docket Numbers: ER11–2973–000
Applicants: California Independent System Operator Corporation
Description: California Independent System Operator Corporation submits tariff filing per 35.13(a)(2)(iii): 2011–02–28 CAISO's Tariff Changes to Implement Offer of Settlement to be effective 12/31/9998.
Filed Date: 03/01/2011
Accession Number: 20110301–5000
Comment Date: 5 p.m. Eastern Time on Tuesday, March 22, 2011

Docket Numbers: ER11–2974–000
Applicants: Tampa Electric Company
Description: Tampa Electric Company submits tariff filing per 35.13(a)(2)(iii): Rate Schedule No. 95 with Progress Energy Florida to be effective 3/1/2011.
Filed Date: 03/01/2011
Accession Number: 20110301–5001
Comment Date: 5 p.m. Eastern Time on Tuesday, March 22, 2011

Docket Numbers: ER11–2975–000
Applicants: PacifiCorp
Description: PacifiCorp submits tariff filing per 35.13(a)(2)(iii): OATT Revised Section 19, Schedule 7, Schedule 11 to be effective 3/2/2011.
Filed Date: 03/01/2011
Accession Number: 20110301–5137
Comment Date: 5 p.m. Eastern Time on Tuesday, March 22, 2011

Docket Numbers: ER11–2976–000
Applicants: Electric Energy, Inc.
Description: Electric Energy, Inc. submits tariff filing per 35.13(a)(2)(iii): Baseline Tariff Revision to Remove BREC Restriction to be effective 5/1/2011.
Filed Date: 03/01/2011
Accession Number: 20110301–5139
Comment Date: 5 p.m. Eastern Time on Tuesday, March 22, 2011

Docket Numbers: ER11–2977–000
Applicants: Southern California Edison Company
Description: Southern California Edison Company submits tariff filing per 35.13(a)(2)(iii): WDAT Revise Generator Interconnection Procedures to be effective 3/2/2011.
Filed Date: 03/01/2011
Accession Number: 20110301–5198
Comment Date: 5 p.m. Eastern Time on Tuesday, March 22, 2011

Take notice that the Commission received the following electric securities filings:

Docket Numbers: ES11–20–000
Applicants: PJM Interconnection L.L.C., PJM Settlement, Inc.
Description: Application of PJM Interconnection L.L.C., and PJM Settlement, Inc. for Authorization to Issue Securities.
Filed Date: 03/01/2011
Accession Number: 20110301–5130
Comment Date: 5 p.m. Eastern Time on Tuesday, March 22, 2011

Any person desiring to intervene or to protest in any of the above proceedings must file in accordance with Rules 211 and 214 of the Commission's Rules of

Practice and Procedure (18 CFR 385.211 and 385.214) on or before 5 p.m. Eastern time on the specified comment date. It is not necessary to separately intervene again in a subdocket related to a compliance filing if you have previously intervened in the same docket. Protests will be considered by the Commission in determining the appropriate action to be taken, but will not serve to make protestants parties to the proceeding. Anyone filing a motion to intervene or protest must serve a copy of that document on the Applicant. In reference to filings initiating a new proceeding, interventions or protests submitted on or before the comment deadline need not be served on persons other than the Applicant.

As it relates to any qualifying facility filings, the notices of self-certification [or self-recertification] listed above, do not institute a proceeding regarding qualifying facility status. A notice of self-certification [or self-recertification] simply provides notification that the entity making the filing has determined the facility named in the notice meets the applicable criteria to be a qualifying facility. Intervention and/or protest do not lie in dockets that are qualifying facility self-certifications or self-recertifications. Any person seeking to challenge such qualifying facility status may do so by filing a motion pursuant to 18 CFR 292.207(d)(iii). Intervention and protests may be filed in response to notices of qualifying facility dockets other than self-certifications and self-recertifications.

The Commission encourages electronic submission of protests and interventions in lieu of paper, using the FERC Online links at *http://www.ferc.gov.* To facilitate electronic service, persons with Internet access who will eFile a document and/or be listed as a contact for an intervenor must create and validate an eRegistration account using the eRegistration link. Select the eFiling link to log on and submit the intervention or protests.

Persons unable to file electronically should submit an original and 14 copies of the intervention or protest to the Federal Energy Regulatory Commission, 888 First St., NE., Washington, DC 20426.

The filings in the above proceedings are accessible in the Commission's eLibrary system by clicking on the appropriate link in the above list. They are also available for review in the Commission's Public Reference Room in Washington, DC. There is an eSubscription link on the Web site that enables subscribers to receive e-mail notification when a document is added to a subscribed docket(s). For assistance with any FERC Online service, please e-mail *FERCOnlineSupport@ferc.gov* or call (866) 208–3676 (toll free). For TTY, call (202) 502–8659.

Dated: March 1, 2011.

Nathaniel J. Davis, Sr.,

Deputy Secretary.

[FR Doc. 2011–5136 Filed 3–7–11; 8:45 am]

BILLING CODE 6717–01–P

DEPARTMENT OF ENERGY

Federal Energy Regulatory Commission

[Docket No. ER11–2962–000]

Tropicana Manufacturing Company, Inc.; Supplemental Notice That Initial Market-Based Rate Filing Includes Request for Blanket Section 204 Authorization

This is a supplemental notice in the above-referenced proceeding of Tropicana Manufacturing Company, Inc.'s application for market-based rate authority, with an accompanying rate tariff, noting that such application includes a request for blanket authorization, under 18 CFR part 34, of future issuances of securities and assumptions of liability.

Any person desiring to intervene or to protest should file with the Federal Energy Regulatory Commission, 888 First Street, NE., Washington, DC 20426, in accordance with Rules 211 and 214 of the Commission's Rules of Practice and Procedure (18 CFR 385.211 and 385.214). Anyone filing a motion to intervene or protest must serve a copy of that document on the Applicant.

Notice is hereby given that the deadline for filing protests with regard to the applicant's request for blanket authorization, under 18 CFR part 34, of future issuances of securities and assumptions of liability, is March 21, 2011.

The Commission encourages electronic submission of protests and interventions in lieu of paper, using the FERC Online links at *http://www.ferc.gov.* To facilitate electronic service, persons with Internet access who will eFile a document and/or be listed as a contact for an intervenor must create and validate an eRegistration account using the eRegistration link. Select the eFiling link to log on and submit the intervention or protests.

Persons unable to file electronically should submit an original and 14 copies of the intervention or protest to the Federal Energy Regulatory Commission, 888 First Street, NE., Washington, DC 20426.

The filings in the above-referenced proceeding are accessible in the Commission's eLibrary system by clicking on the appropriate link in the above list. They are also available for review in the Commission's Public Reference Room in Washington, DC. There is an eSubscription link on the Web site that enables subscribers to receive e-mail notification when a document is added to a subscribed dockets(s). For assistance with any FERC Online service, please e-mail *FERCOnlineSupport@ferc.gov* or call (866) 208–3676 (toll free). For TTY, call (202) 502–8659.

Dated: March 1, 2011.

Kimberly D. Bose,

Secretary.

[FR Doc. 2011–5208 Filed 3–7–11; 8:45 am]

BILLING CODE 6717–01–P

DEPARTMENT OF ENERGY

Federal Energy Regulatory Commission

[Docket No. ER11–2954–000]

DTE Calvert City, LLC; Supplemental Notice that Initial Market-Based Rate Filing Includes Request for Blanket Section 204 Authorization

This is a supplemental notice in the above-referenced proceeding of DTE Calvert City, LLC's application for market-based rate authority, with an accompanying rate tariff, noting that such application includes a request for blanket authorization, under 18 CFR part 34, of future issuances of securities and assumptions of liability.

Any person desiring to intervene or to protest should file with the Federal Energy Regulatory Commission, 888 First Street, NE., Washington, DC 20426, in accordance with Rules 211 and 214 of the Commission's Rules of Practice and Procedure (18 CFR 385.211 and 385.214). Anyone filing a motion to intervene or protest must serve a copy of that document on the Applicant.

Notice is hereby given that the deadline for filing protests with regard to the applicant's request for blanket authorization, under 18 CFR part 34, of future issuances of securities and assumptions of liability, is March 21, 2011.

The Commission encourages electronic submission of protests and interventions in lieu of paper, using the FERC Online links at *http://www.ferc.gov.* To facilitate electronic service, persons with Internet access

who will eFile a document and/or be listed as a contact for an intervenor must create and validate an eRegistration account using the eRegistration link. Select the eFiling link to log on and submit the intervention or protests.

Persons unable to file electronically should submit an original and 14 copies of the intervention or protest to the Federal Energy Regulatory Commission, 888 First Street, NE., Washington, DC 20426.

The filings in the above-referenced proceeding are accessible in the Commission's eLibrary system by clicking on the appropriate link in the above list. They are also available for review in the Commission's Public Reference Room in Washington, DC. There is an eSubscription link on the Web site that enables subscribers to receive e-mail notification when a document is added to a subscribed dockets(s). For assistance with any FERC Online service, please e-mail *FERCOnlineSupport@ferc.gov* or call (866) 208–3676 (toll free). For TTY, call (202) 502–8659.

Dated: March 1, 2011.

Kimberly D. Bose,

Secretary.

[FR Doc. 2011–5207 Filed 3–7–11; 8:45 am]

BILLING CODE 6717–01–P

DEPARTMENT OF ENERGY

Federal Energy Regulatory Commission

[Project No. 14087–000]

Black Canyon Hydro, LLC; Notice of Preliminary Permit Application Accepted for Filing and Soliciting Comments, Motions To Intervene, and Competing Applications

On January 26, 2011, Black Canyon Hydro, LLC filed an application for a preliminary permit, pursuant to section 4(f) of the Federal Power Act (FPA), proposing to study the feasibility of the Black Canyon Pumped Storage Project (project) to be located at the U.S. Bureau of Reclamation's Kortes and Seminoe Dams, near Rawlins, Carbon County, Wyoming. The sole purpose of a preliminary permit, if issued, is to grant the permit holder priority to file a license application during the permit term. A preliminary permit does not authorize the permit holder to perform any land-disturbing activities or otherwise enter upon lands or waters owned by others without the owners' express permission.

The proposed project has four alternatives and would consist of the following:

East Reservoir–Kortes Alternative

(1) The existing Kortes Reservoir as the lower reservoir; (2) a new, 50-foot-high, 8.724-foot-long earthen or rockfill East Reservoir embankment; (3) a new artificial, lined East Reservoir with a storage capacity of 9,700-acre-foot; (4) a 3,800-foot-long, 18.7-foot-diameter concrete-lined pressure shaft; (5) a 200-foot-long, 22.4-foot-diameter concrete-lined tailrace; (6) a 280-foot-long, 70-foot-wide, 120-foot-high powerhouse; and (7) 0.75-mile-long, 230-kilovolt (kV) transmission line to an interconnection point to the Western Area Power Administration (WAPA) Miracle Mile-Cheyenne transmission line on the Seminoe Reservoir side of the project.

East Reservoir–Seminoe Alternative

(1) The existing Seminoe Reservoir as the lower reservoir; (2) a new, 50-foot-high, 8.724-foot-long earthen or rockfill East Reservoir embankment; (3) a new artificial, lined East Reservoir with a storage capacity of 9,700-acre-foot; (4) a 800-foot-long, 20.4-foot-diameter unlined or concrete-lined low-pressure tunnel; (5) a 5,800-foot-long, 20.4-foot-diameter concrete-lined pressure shaft; (6) a 200-foot-long, 24.5-foot-diameter concrete-lined tailrace; and (7) a 280-foot-long, 70-foot-wide, 120-foot-high powerhouse. The interconnection point to the WAPA Miracle Mile-Cheyenne line is adjacent to the powerhouse, therefore, a transmission line is not required.

North Reservoir–Kortes Alternative

(1) The existing Kortes Reservoir as the lower reservoir; (2) a new, 50-foot-high, 6,280-foot-long earthen or rockfill North Reservoir embankment; (3) a new artificial, lined North Reservoir with a storage capacity of 5,322-acre-foot; (4) a 1,400-foot-long, 16.7-foot-diameter unlined or concrete-lined low-pressure tunnel; (5) a 1,960-foot-long, 16.7-foot-diameter concrete-lined pressure tunnel; (6) a 560-foot-long, 20.1-foot-diameter concrete-lined tailrace; (7) an 250-foot-high, 60-foot-wide, 120-foot-high powerhouse; and (8) a 1-mile-long, 230-kV transmission line to an interconnection point of the WAPA Miracle Mile-Cheyenne transmission line on the Seminoe Reservoir side of the project.

North Reservoir–Seminoe Alternative

(1) The existing Seminoe Reservoir as the lower reservoir; (2) a new, 50-foot-high, 6,280-foot-long earthen or rockfill North Reservoir embankment; (3) a new artificial, lined North Reservoir with a storage capacity of 5,322-acre-foot; (4) a 1,400-foot-long, 18.2-foot-diameter unlined or concrete-lined low-pressure tunnel; (5) a 3,780-foot-long, 18.2-foot-diameter concrete-lined pressure tunnel; (6) a 1,307-foot-long, 21.9-foot-diameter concrete-lined tailrace; (7) a 250-foot-high, 60-foot-wide, 120-foot-high powerhouse; and (8) a 0.25-mile-long, 230-kV transmission line interconnecting with the WAPA Miracle Mile-Cheyenne line.

The generating equipment for the East Reservoir alternatives will consist of three 133-megawatt (MW) adjustable-speed reversible pump-turbines with a total generating capacity of 400 MW. The generating equipment for the North Reservoir alternatives will consist of three 100–MW adjustable-speed reversible pump-turbines with a total generating capacity of 300 MW.

The estimated annual generation of the project would be 2,146.2 gigawatt-hours.

Applicant Contact: Mr. Matthew Shapiro, Black Canyon Hydro, LLC, 1210 W. Franklin Street, Suite 2, Boise, Idaho 83702; phone: (208) 246–9925.

FERC Contact: Kelly Wolcott; phone: (202) 502–6480.

Deadline for filing comments, motions to intervene, competing applications (without notices of intent), or notices of intent to file competing applications: 60 days from the issuance of this notice. Competing applications and notices of intent must meet the requirements of 18 CFR 4.36. Comments, motions to intervene, notices of intent, and competing applications may be filed electronically via the Internet. *See* 18 CFR 385.2001(a)(1)(iii) and the instructions on the Commission's Web site *http://www.ferc.gov/docs-filing/efiling.asp.* Commenters can submit brief comments up to 6,000 characters, without prior registration, using the eComment system at *http://www.ferc.gov/docs-filing/ecomment.asp.* You must include your name and contact information at the end of your comments. For assistance, please contact FERC Online Support at *FERCOnlineSupport@ferc.gov* or toll free at 1–866–208–3676, or for TTY, (202) 502–8659. Although the Commission strongly encourages electronic filing, documents may also be paper-filed. To paper-file, mail an original and seven copies to: Kimberly D. Bose, Secretary, Federal Energy Regulatory Commission, 888 First Street, NE., Washington, DC 20426.

More information about this project, including a copy of the application, can be viewed or printed on the "eLibrary" link of Commission's Web site at

http://www.ferc.gov/docs-filing/elibrary.asp. Enter the docket number (P–14087–000) in the docket number field to access the document. For assistance, contact FERC Online Support.

Dated: March 1, 2011.

Kimberly D. Bose,

Secretary.

[FR Doc. 2011–5212 Filed 3–7–11; 8:45 am]

BILLING CODE 6717–01–P

DEPARTMENT OF ENERGY

Federal Energy Regulatory Commission

[Project No. 13059–001]

Pacific Gas and Electric Company; Notice of Preliminary Permit Application Accepted for Filing and Soliciting Comments, Motions To Intervene, and Competing Applications

On January 31, 2011, Pacific Gas and Electric Company (PG&E) filed an application for a successive preliminary permit, pursuant to section 4(f) of the Federal Power Act (FPA), proposing to study the feasibility of developing incremental capacity at PG&E's licensed Pit 3, 4, 5 project (No. 233), located on the Pit River in Shasta County, California. The sole purpose of a preliminary permit, if issued, is to grant the permit holder priority to file a license application during the permit term. A preliminary permit does not authorize the permit holder to perform any land-disturbing activities or otherwise enter upon lands or waters owned by others without the owners' express permission.

The proposed project would consist of the following: (1) A new single-unit powerhouse with a turbine and generator constructed downstream of the right abutment of the existing Pit 4 dam. The proposed project would have an expected capacity of 2.2 megawatts and an expected annual average energy production of 11.3 gigawatt-hours.

Applicant Contact: Mr. Randal S. Livingston, Vice President—Power Generation, Pacific Gas and Electric Company, 245 Market Street, MS N11E, P.O. Box 770000, San Francisco, CA 94177; phone: (415) 973–6950.

FERC Contact: Matt Buhyoff; phone: (202) 502–6824.

Deadline for filing comments, motions to intervene, and competing applications (without notices of intent), or notices of intent to file competing applications: 60 days from the issuance of this notice. Competing applications and notices of intent must meet the requirements of 18 CFR 4.36. Comments, motions to intervene, notices of intent, and competing applications may be filed electronically via the Internet. *See* 18 CFR 385.2001(a)(1)(iii) and the instructions on the Commission's Web site *http://www.ferc.gov/docs-filing/efiling.asp.* Commenters can submit brief comments up to 6,000 characters, without prior registration, using the eComment system at *http://www.ferc.gov/docs-filing/ecomment.asp.* You must include your name and contact information at the end of your comments. For assistance, please contact FERC Online Support at *FERCOnlineSupport@ferc.gov* or toll free at 1–866–208–3676, or for TTY, (202) 502–8659. Although the Commission strongly encourages electronic filing, documents may also be paper-filed. To paper-file, mail an original and seven copies to: Kimberly D. Bose, Secretary, Federal Energy Regulatory Commission, 888 First Street, NE., Washington, DC 20426.

More information about this project, including a copy of the application, can be viewed or printed on the "eLibrary" link of Commission's Web site at *http://www.ferc.gov/docs-filing/elibrary.asp.* Enter the docket number (P–13059–001) in the docket number field to access the document. For assistance, contact FERC Online Support.

Dated: March 1, 2011.

Kimberly D. Bose,

Secretary.

[FR Doc. 2011–5211 Filed 3–7–11; 8:45 am]

BILLING CODE 6717–01–P

ENVIRONMENTAL PROTECTION AGENCY

[FRL–9276–4]

Agency Information Collection Activities OMB Responses

AGENCY: Environmental Protection Agency (EPA).

ACTION: Notice.

SUMMARY: This document announces the Office of Management and Budget (OMB) responses to Agency Clearance requests, in compliance with the Paperwork Reduction Act (44 U.S.C. 3501 *et seq.*). An agency may not conduct or sponsor, and a person is not required to respond to, a collection of information unless it displays a currently valid OMB control number. The OMB control numbers for EPA regulations are listed in 40 CFR part 9 and 48 CFR chapter 15.

FOR FURTHER INFORMATION CONTACT: Rick Westlund (202) 566–1682, or e-mail at *westlund.rick@epa.gov* and please refer to the appropriate EPA Information Collection Request (ICR) Number.

SUPPLEMENTARY INFORMATION:

OMB Responses to Agency Clearance Requests

OMB Approvals

EPA ICR Number 2330.01; Pesticide Registration Fees Program; was approved on 02/01/2011; OMB Number 2070–0179; expires on 02/28/2014; Approved without change.

EPA ICR Number 2395.01; Aerospace Manufacturing And Rework Industry Information Collection; was approved on 02/03/2011; OMB Number 2060–0654; expires on 02/28/2014; Approved with change.

EPA ICR Number 1857.05; NOX Budget Trading Program to Reduce the Regional Transport of Ozone; 40 CFR 51.121 and 51.122, 40 CFR part 75, subpart H; was approved on 02/07/2011; OMB Number 2060–0445; expires on 02/28/2014; Approved without change.

EPA ICR Number 2398.02; Regulation of Fuels and Fuel Additives: 2011 Renewable Fuel Standards—Petition for International Aggregate Compliance Approach; 40 CFR part 80; was approved on 02/09/2011; OMB Number 2060–0655; expires on 02/28/2014; Approved without change.

EPA ICR Number 2234.03; 2011 Drinking Water Infrastructure Needs Survey and Assessment (Reinstatement); was approved on 02/10/2011; OMB Number 2040–0274; expires on 02/28/2014; Approved with change.

EPA ICR Number 2393.01; NSPS and NESHAP for Pulp and Paper Sector Residual Risk and Technology Review (RTR); was approved on 02/17/2011; OMB Number 2060–0656; expires on 02/28/2014; Approved with change.

Short Term Extension of Expiration Date

EPA ICR Number 2147.06; Pesticide Registration Fee Waivers; a short term extension of the expiration date was granted by OMB on 02/01/2011; OMB Number 2070–0167; expires on 02/28/2011.

Dated: March 2, 2011.

John Moses,

Director, Collections Strategies Division.

[FR Doc. 2011–5199 Filed 3–7–11; 8:45 am]

BILLING CODE 6560–50–P

ENVIRONMENTAL PROTECTION AGENCY

[EPA–HQ–OPP–2011–0038; FRL–8861–1]

Cambridge Environmental Inc; Transfer of Data

AGENCY: Environmental Protection Agency (EPA).

ACTION: Notice.

SUMMARY: This notice announces that pesticide related information submitted to EPA's Office of Pesticide Programs (OPP) pursuant to the Federal Insecticide, Fungicide, and Rodenticide Act (FIFRA) and the Federal Food, Drug, and Cosmetic Act (FFDCA), including information that may have been claimed as Confidential Business Information (CBI) by the submitter, will be transferred to Cambridge Environmental Inc. in accordance with 40 CFR 2.307(h)(3) and 2.308(i)(2). Cambridge Environmental Inc. has been awarded a contract to perform work for OPP, and access to this information will enable Cambridge Environmental Inc. to fulfill the obligations of the contract.

DATES: Cambridge Environmental Inc., will be given access to this information on or before March 7, 2011.

FOR FURTHER INFORMATION CONTACT: Mario Steadman, Information Technology and Resources Management Division (7502P), Office of Pesticide Programs, Environmental Protection Agency, 1200 Pennsylvania Ave., NW., Washington, DC 20460–0001; telephone number: (703) 305–8338 e-mail address: *steadman.mario@epa.gov.*

SUPPLEMENTARY INFORMATION:

I. General Information

A. Does this action apply to me?

This action applies to the public in general. As such, the Agency has not attempted to describe all the specific entities that may be affected by this action. If you have any questions regarding the applicability of this action to a particular entity, consult the person listed under **FOR FURTHER INFORMATION CONTACT**.

B. How can I get copies of this document and other related information?

EPA has established a docket for this action under docket identification (ID) number EPA–HQ–OPP–2011–0038. Publicly available docket materials are available either in the electronic docket at *http://www.regulations.gov,* or, if only available in hard copy, at the Office of Pesticide Programs (OPP) Regulatory Public Docket in Rm. S–4400, One Potomac Yard (South Bldg.), 2777 S. Crystal Dr., Arlington, VA. The hours of operation of this Docket Facility are from 8:30 a.m. to 4 p.m., Monday through Friday, excluding legal holidays. The Docket Facility telephone number is (703) 305–5805.

II. Contractor Requirements

Under contract number, [EP–W–11–020], Cambridge Environmental Inc., will review, evaluate a portion of a risk assessment, or investigate issues related to a submitted risk assessment to inform Agency scientists in evaluating assessments. This includes evaluating the applicability of the data and methods used in the assessment, and the soundness of the conclusions.

Develop and enhance risk assessment methods and tools which includes: Investigating and developing new assessment methods and tools, developing, evaluating and recommending improvements to existing tools and methods, or investigating issues related to the risk assessment process to include literature searches and preparation of options and other recommendations. This procurement will also provide additional support to EPA in investigating science policy issues related to probabilistic risk assessments and the development of science issues and problems associated with assessing pesticide data or risk. The contractor may develop policy options for evaluation and consideration by EPA.

Upon request, the contractor shall organize workshops to facilitate gathering scientific input and discussion on issues related to specific chemicals, groups of chemicals, or generic risk exposure and risk assessment issues. The contractor will organize and facilitate the meetings, organize materials in preparation for the meetings, take notes, gather the comments and presentations, organize and distribute notes and summaries from the meetings, and develop recommendations and options papers from the workshops.

In most instances, the project officer will make available to the contractor the data, studies, and information which are to be used. Occasionally the project officer will request that the contractor search open literature and collect and aggregate extant monitoring data or additional information to support an assessment. The material will be provided in printed form (originals or reprints of each study) and/or electronic form. Due dates for each data package and/or assessment and/or project shall be negotiated between the project officer and the contractor.

The contractor shall supply the necessary labor, materials, equipment, software, services and facilities required for the performance of each work assignment. The scientific quality of reviews, assessments, reports, model tools, and software and their timely preparation in accordance with negotiated schedules are of paramount importance in the performance of this contract.

This contract involves no subcontractors.

OPP has determined that the contract described in this document involves work that is being conducted in connection with FIFRA, in that pesticide chemicals will be the subject of certain evaluations to be made under this contract. These evaluations may be used in subsequent regulatory decisions under FIFRA.

Some of this information may be entitled to confidential treatment. The information has been submitted to EPA under sections 3, 4, 6, and 7 of FIFRA and under sections 408 and 409 of FFDCA.

In accordance with the requirements of 40 CFR 2.307(h)(3), the contract with Cambridge Environmental Inc. prohibits use of the information for any purpose not specified in this contract; prohibits disclosure of the information to a third party without prior written approval from the Agency; and requires that each official and employee of the contractor sign an agreement to protect the information from unauthorized release and to handle it in accordance with the FIFRA Information Security Manual. In addition, Cambridge Environmental Inc. is required to submit for EPA approval a security plan under which any CBI will be secured and protected against unauthorized release or compromise. No information will be provided to Cambridge Environmental Inc. until the requirements in this document have been fully satisfied. Records of information provided to Cambridge Environmental Inc. will be maintained by EPA Project Officers for this contract. All information supplied to Cambridge Environmental Inc. by EPA for use in connection with this contract will be returned to EPA when Cambridge Environmental Inc. has completed its work.

List of Subjects

Environmental protection, Business and industry, Government contracts, Government property, Security measures.

Dated: March 1, 2011.

Michael Hardy,

Acting Director, Information Technology and Resources Management Division, Office of Pesticide Programs.

[FR Doc. 2011–5343 Filed 3–4–11; 4:15 pm]

BILLING CODE 6560–50–P

ENVIRONMENTAL PROTECTION AGENCY

[Regional Docket Nos. V–2009–1, FRL–9276–7]

Clean Air Act Operating Permit Program; Objection to State Operating Permit for U.S. Steel–Granite City Works

AGENCY: Environmental Protection Agency (EPA).

ACTION: Notice of final order on petition to object to Clean Air Act operating permit.

SUMMARY: This document announces that the EPA Administrator partially granted and partially denied a petition from the Interdisciplinary Environmental Clinic at the Washington University School of Law submitted to EPA on behalf of the American Bottom Conservancy (Petitioner) to object to the operating permit issued by the Illinois Environmental Protection Agency to the U.S. Steel—Granite City Works (USS).

Sections 307(b) and 505(b)(2) of the Clean Air Act (Act) provide that a petitioner may ask for judicial review in the United States Court of Appeals for the appropriate circuit of those portions of the petition which EPA denies. Any petition for review shall be filed within 60 days from the date this notice appears in the **Federal Register**, pursuant to section 307 of the Act.

ADDRESSES: You may review copies of the final order, the petition, and other supporting information at the EPA Region 5 Office, 77 West Jackson Boulevard, Chicago, Illinois 60604. If you wish to examine these documents, you should make an appointment with Genevieve Damico at least 24 hours before visiting the Region 5 offices. Additionally, the final order for the USS petition is available electronically at: *http://www.epa.gov/region07/air/title5/petitiondb/petitions/uss_response2009.pdf.*

FOR FURTHER INFORMATION CONTACT: Genevieve Damico, Acting Chief, Air Permits Section, Air Programs Branch, Air and Radiation Division, EPA, Region 5, 77 West Jackson Boulevard, Chicago, Illinois 60604, (312)353–4761.

SUPPLEMENTARY INFORMATION: The Act affords EPA a 45-day period to review, and object, as appropriate, to Title V operating permits proposed by State permitting authorities. Section 505(b)(2) of the Act authorizes any person to petition the EPA Administrator within 60 days after the expiration of the EPA review period to object to a Title V operating permit if EPA has not done so. A petition must be based only on objections to the permit that were raised with reasonable specificity during the public comment period provided by the State, unless the petitioner demonstrates that it was impracticable to raise issues during the comment period, or the grounds for the issues arose after this period.

On October 1, 2009, the Petitioner submitted a petition requesting that EPA object to the USS Title V permit pursuant to section 505(b)(2) of the Act and 40 CFR 70.8(d). Petitioner alleged that (1) the permit fails to include all applicable permits and permit requirements; (2) the permit fails to provide periodic monitoring sufficient to assure compliance; (3) the permit lacks compliance schedules to remedy all current violations; (4) the permit unlawfully exempts emissions during startup, shutdown, and malfunctions; (5) the permit fails to include compliance assurance monitoring requirements; and (6) numerous permit provisions are not practically enforceable.

On January 28, 2011, the Administrator issued an order partially granting and partially denying the petition. The order explains the reasons behind EPA's conclusion.

Dated: February 28, 2011.

Susan Hedman,

Regional Administrator, Region 5.

[FR Doc. 2011–5189 Filed 3–7–11; 8:45 am]

BILLING CODE 6560–50–P

ENVIRONMENTAL PROTECTION AGENCY

[MN91; FRL–9276–5]

Notice of Issuance of Federal Operating Permit to Great Lakes Gas Transmission Limited Partnership

AGENCY: Environmental Protection Agency (EPA).

ACTION: Notice.

SUMMARY: This notice announces that, on January, 28, 2011, pursuant to Title V of the Clean Air Act, EPA issued a Title V Permit to Operate (Title V permit) to Great Lakes Gas Transmission Limited Partnership (Great Lakes Gas). This permit authorizes Great Lakes Gas to operate three natural gas-fired turbine/compressors and one natural gas-fired standby electrical generator at Compressor Station #5 (CS#5) in Cloquet, Minnesota. CS#5, which is located on privately-owned fee land within the exterior boundaries of the Fond du Lac Band of Lake Superior Chippewa Indian Reservation, adds pressure to natural gas in Great Lakes' pipeline, causing the natural gas to flow to the next compressor station.

DATES: EPA did not receive any comments during the public comment period, which ended December 15, 2010. The final permit became effective on February 27, 2011.

ADDRESSES: The final signed permit is available for public inspection online at *http://yosemite.epa.gov/r5/r5ard.nsf/Tribal+Permits!OpenView,* or during normal business hours at the following address: EPA, Region 5, 77 West Jackson Boulevard (AR–18J), Chicago, Illinois 60604.

FOR FURTHER INFORMATION CONTACT: Genevieve Damico, Environmental Engineer, EPA, Region 5, 77 West Jackson Boulevard (AR–18J), Chicago, Illinois 60604, (312)353–4761, or *damico.genevieve@epa.gov.*

SUPPLEMENTARY INFORMATION: This supplemental information is organized as follows:

A. What Is the Background Information?
B. What Is the Purpose of this Notice?

A. What is the background information?

Great Lakes Gas operates nearly 2,000 miles of large diameter underground pipeline, which transports natural gas for delivery to customers in the midwestern and northeastern United States and eastern Canada. The Great Lakes Gas pipeline system and other interstate natural gas transmission pipelines make up the long-distance link between natural gas production fields, local distribution companies, and end users. The pipeline's 14 compressor stations, located approximately 75 miles apart, operate to keep natural gas moving through the system. Compressors at these stations add pressure to natural gas in the pipeline, causing it to flow to the next compressor station. The pipeline normally operates continuously, but at varying load, 24 hours per day and 365 days per year. CS#5 currently consists of three stationary natural gas-fired turbines, which in turn drive two natural gas compressors. Additionally, one natural gas-fired standby electrical generator provides electrical power for critical operations during temporary electrical power outages and during peak loading.

CS#5 is located 17 miles west of Cloquet, Minnesota. The area is designated attainment for all criteria pollutants. CS#5 is owned and maintained by Great Lakes Gas on privately-owned fee land within the exterior boundaries of the Fond du Lac Band of Lake Superior Chippewa Indian Reservation. EPA is responsible for issuing and enforcing any air quality permits for the source until such time that the Fond du Lac Band of Lake Superior Chippewa Indian Tribe has EPA approval to do so.

CS#5 is subject to Title V because it has the potential to emit greater than 100 tons per year of nitrogen oxide and carbon monoxide. Great Lakes Gas submitted to EPA on November 23, 2009, a Title V permit application to renew its 2005 title V operating permit for CS#5. On November 15, 2010, EPA published a draft Title V permit to operate for public comment. The public comment period ended on December 15, 2010. EPA did not receive any comments on the draft title V permit, and the permit became effective on February 27, 2011.

EPA is not aware of any outstanding enforcement actions against Great Lakes Gas and believes the issuance of this permit is non-controversial.

B. What is the purpose of this notice?

EPA is notifying the public of the issuance of the Great Lakes Gas CS#5 Title V permit.

Dated: February 28, 2011.

Susan Hedman,

Regional Administrator, Region 5.

[FR Doc. 2011–5197 Filed 3–7–11; 8:45 am]

BILLING CODE 6560–50–P

ENVIRONMENTAL PROTECTION AGENCY

[FRL–9277–6]

Good Neighbor Environmental Board

AGENCY: Environmental Protection Agency (EPA).

ACTION: Notice of meeting.

SUMMARY: Under the Federal Advisory Committee Act, Public Law 92463, EPA gives notice of a meeting of the Good Neighbor Environmental Board (Board). The Board usually meets three times each calendar year, twice at different locations along the U.S. border with Mexico, and once in Washington, DC. It was created in 1992 by the Enterprise for the Americas Initiative Act, Public Law 102–532, 7 U.S.C. Section 5404. Implementing authority was delegated to the Administrator of EPA under Executive Order 12916. The Board is responsible for providing advice to the President and the Congress on environmental and infrastructure issues and needs within the States contiguous to Mexico in order to improve the quality of life of persons residing on the United States side of the border. The statute calls for the Board to have representatives from U.S. Government agencies; the States of Arizona, California, New Mexico and Texas; and Tribal and private organizations to provide advice on environmental and infrastructure issues along the U.S.-Mexico border.

The purpose of the meeting is to discuss the Board's 14th report, which will focus on the environmental and economic benefits of renewable energy in the border region. A copy of the meeting agenda will be posted at *http://www.epa.gov/ocem/gneb.*

DATES: The Good Neighbor Environmental Board will hold an open meeting on Thursday, March 24, from 8:30 a.m. (registration at 8 a.m.) to 5:30 p.m. The following day, March 25, the Board will meet from 8 a.m. until 2 p.m.

ADDRESSES: The meeting will be held at the Mandarin Oriental, 1330 Maryland Avenue, SW., Washington, DC 20024, phone number: 202–554–8588. The meeting is open to the public, with limited seating on a first-come, first-served basis.

FOR FURTHER INFORMATION CONTACT: Mark Joyce, Acting Designated Federal Officer, *joyce.mark@epa.gov,* 202–564–2130, U.S. EPA, Office of Federal Advisory Committee Management and Outreach (1601M), 1200 Pennsylvania Avenue, NW., Washington, DC 20460.

SUPPLEMENTARY INFORMATION: If you wish to make oral comments or submit written comments to the Board, please contact Mark Joyce at least five days prior to the meeting.

General Information: Additional information concerning the GNEB can be found on its Web site at *http://www.epa.gov/ocem/gneb.*

Meeting Access: For information on access or services for individuals with disabilities, please contact Mark Joyce at 202–564–2130 or by e-mail at *joyce.mark@epa.gov.* To request accommodation of a disability, please contact Mark Joyce at least 10 days prior to the meeting to give EPA as much time as possible to process your request.

Dated: February 28, 2011.

Mark Joyce,

Acting Designated Federal Officer.

[FR Doc. 2011–5209 Filed 3–7–11; 8:45 am]

BILLING CODE 6560–50–P

ENVIRONMENTAL PROTECTION AGENCY

[FRL–9276–9]

Proposed Consent Decree, Clean Air Act Citizen Suit

AGENCY: Environmental Protection Agency (EPA).

ACTION: Notice of Proposed Consent Decree; Request for Public Comment.

SUMMARY: In accordance with section 113(g) of the Clean Air Act, as amended ("CAA" or the "Act"), 42 U.S.C. 7413(g), notice is hereby given of a proposed consent decree to address a lawsuit filed by WildEarth Guardians in the United States District Court for the District of New Mexico: *WildEarth Guardians* v. *Jackson,* No. 6:10–;cv–;00877–MCA–RHS (D. NM). Plaintiff filed a deadline suit to compel the Administrator to respond to an administrative petition seeking EPA's objection to a CAA Title V operating permit issued by the New Mexico Environment Department, Air Quality Bureau to Williams Four Corners LLC for the Sims (also spelled as "Simms") Mesa Central Delivery Point facility. Under the terms of the proposed consent decree, EPA has agreed to respond to the petition by April 29, 2011, or within 30 days of the entry date of this Consent Decree, whichever is later.

DATES: Written comments on the proposed consent decree must be received by *April 7, 2011.*

ADDRESSES: Submit your comments, identified by Docket ID number EPA–HQ–OGC–2011–0212, online at *http://www.regulations.gov* (EPA's preferred method); by e-mail to *oei.docket@epa.gov;* by mail to EPA Docket Center, Environmental Protection Agency, Mailcode: 2822T, 1200 Pennsylvania Ave., NW., Washington, DC 20460–0001; or by hand delivery or courier to EPA Docket Center, EPA West, Room 3334, 1301 Constitution Ave., NW., Washington, DC, between 8:30 a.m. and 4:30 p.m. Monday through Friday, excluding legal holidays. Comments on a disk or CD–ROM should be formatted in Word or ASCII file, avoiding the use of special characters and any form of encryption, and may be mailed to the mailing address above.

FOR FURTHER INFORMATION CONTACT: Melina Williams, Air and Radiation Law Office (2344A), Office of General Counsel, U.S. Environmental Protection Agency, 1200 Pennsylvania Ave., NW., Washington, DC 20460; telephone: (202) 564–3406; fax number (202) 564–5603;

e-mail address: *williams.melina@epa.gov.*

SUPPLEMENTARY INFORMATION:

I. Additional Information About the Proposed Consent Decree

This proposed consent decree would resolve a lawsuit alleging that the Administrator failed to perform a nondiscretionary duty to grant or deny, within 60 days of submission, an administrative petition to object to a CAA Title V permit issued by the New Mexico Environment Department, Air Quality Bureau to Williams Four Corners LLC for the Sims Mesa Central Delivery Point facility. Under the terms of the proposed consent decree, EPA has agreed to respond to the petition by April 29, 2011, or within 30 days of the entry date of this Consent Decree, whichever is later. The proposed consent decree further states that EPA shall expeditiously deliver notice of such action on the permit to the Office of the Federal Register for publication. In addition, the proposed consent decree states that deadline for filing a motion for costs of litigation (including attorneys' fees) is extended until 60 days after the decree is entered by the court, that the parties shall seek to resolve informally any claim for such costs during those 60 days, and that if they cannot they will submit the issue to the court for resolution. The proposed consent decree also states that, after EPA fulfills its obligations under the decree and the plaintiff's claims for costs of litigation have been resolved as provided in the decree, the case shall be dismissed with prejudice.

For a period of thirty (30) days following the date of publication of this notice, the Agency will accept written comments relating to the proposed consent decree from persons who were not named as parties or intervenors to the litigation in question. EPA or the Department of Justice may withdraw or withhold consent to the proposed consent decree if the comments disclose facts or considerations that indicate that such consent is inappropriate, improper, inadequate, or inconsistent with the requirements of the Act. Unless EPA or the Department of Justice determines that consent to this consent decree should be withdrawn, the terms of the decree will be affirmed.

II. Additional Information About Commenting on the Proposed Consent Decree

A. How can I get a copy of the consent decree?

The official public docket for this action (identified by Docket ID No. EPA–HQ–OGC–2011–0212) contains a copy of the proposed consent decree. The official public docket is available for public viewing at the Office of Environmental Information (OEI) Docket in the EPA Docket Center, EPA West, Room 3334, 1301 Constitution Ave., NW., Washington, DC. The EPA Docket Center Public Reading Room is open from 8:30 a.m. to 4:30 p.m., Monday through Friday, excluding legal holidays. The telephone number for the Public Reading Room is (202) 566–1744, and the telephone number for the OEI Docket is (202) 566–1752.

An electronic version of the public docket is available through *http://www.regulations.gov.* You may use the *http://www.regulations.gov* to submit or view public comments, access the index listing of the contents of the official public docket, and to access those documents in the public docket that are available electronically. Once in the system, key in the appropriate docket identification number then select "search".

It is important to note that EPA's policy is that public comments, whether submitted electronically or in paper, will be made available for public viewing online at *http://www.regulations.gov* without change, unless the comment contains copyrighted material, CBI, or other information whose disclosure is restricted by statute. Information claimed as CBI and other information whose disclosure is restricted by statute is not included in the official public docket or in the electronic public docket. EPA's policy is that copyrighted material, including copyrighted material contained in a public comment, will not be placed in EPA's electronic public docket but will be available only in printed, paper form in the official public docket. Although not all docket materials may be available electronically, you may still access any of the publicly available docket materials through the EPA Docket Center.

B. How and to whom do I submit comments?

You may submit comments as provided in the **ADDRESSES** section. Please ensure that your comments are submitted within the specified comment period. Comments received after the close of the comment period will be marked "late." EPA is not required to consider these late comments.

If you submit an electronic comment, EPA recommends that you include your name, mailing address, and an e-mail address or other contact information in the body of your comment and with any disk or CD ROM you submit. This ensures that you can be identified as the submitter of the comment and allows EPA to contact you in case EPA cannot read your comment due to technical difficulties or needs further information on the substance of your comment. Any identifying or contact information provided in the body of a comment will be included as part of the comment that is placed in the official public docket, and made available in EPA's electronic public docket. If EPA cannot read your comment due to technical difficulties and cannot contact you for clarification, EPA may not be able to consider your comment.

Use of the *http://www.regulations.gov* Web site to submit comments to EPA electronically is EPA's preferred method for receiving comments. The electronic public docket system is an "anonymous access" system, which means EPA will not know your identity, e-mail address, or other contact information unless you provide it in the body of your comment. In contrast to EPA's electronic public docket, EPA's electronic mail (e-mail) system is not an "anonymous access" system. If you send an e-mail comment directly to the Docket without going through *http://www.regulations.gov,* your e-mail address is automatically captured and included as part of the comment that is placed in the official public docket, and made available in EPA's electronic public docket.

Dated: March 1, 2011.

Richard B. Ossias,

Associate General Counsel.

[FR Doc. 2011–5200 Filed 3–7–11; 8:45 am]

BILLING CODE 6560–50–P

ENVIRONMENTAL PROTECTION AGENCY

[FRL–9277–5]

Science Advisory Board Staff Office; Notification of a Public Teleconference of the Air Monitoring and Methods Subcommittee

AGENCY: Environmental Protection Agency (EPA).

ACTION: Notice.

SUMMARY: The Environmental Protection Agency (EPA or Agency) Science Advisory Board (SAB) Staff Office announces a public teleconference of the Clean Air Scientific Advisory Committee (CASAC) Air Monitoring and Methods Subcommittee (AMMS) to discuss the AMMS draft report on EPA's draft monitoring documents for Oxides of Nitrogen (NO_X) and Sulfur (SO_x).

DATES: A public teleconference will be held on Tuesday, March 29, 2011 from 1 p.m. to 3 p.m. (Eastern Time).

ADDRESSES: The public teleconference will be conducted by telephone only.

FOR FURTHER INFORMATION CONTACT: Any member of the public wishing further information regarding this Notice and public teleconference may contact

Mr. Edward Hanlon, Designated Federal Officer (DFO), SAB Staff Office, by telephone/voice mail at (202) 564–2134; by fax at (202) 565–2098 or via e-mail at *hanlon.edward@epa.gov.* General information concerning the EPA CASAC can be found at the EPA CASAC Web site at *http://www.epa.gov/casac.* Any inquiry regarding EPA's draft monitoring documents for NO_X and SO_X should be directed to Dr. Richard Scheffe, EPA Office of Air Quality Planning and Standards (OAQPS), at *scheffe.rich@epa.gov* or 919–541–4650.

SUPPLEMENTARY INFORMATION:

Background: The CASAC was established pursuant to the under the Clean Air Act (CAA) Amendments of 1977, codified at 42 U.S.C. 7409D(d)(2), to provide advice, information, and recommendations to the Administrator on the scientific and technical aspects of issues related to the criteria for air quality standards, research related to air quality, sources of air pollution, and the strategies to attain and maintain air quality standards and to prevent significant deterioration of air quality. The CASAC is a Federal Advisory Committee chartered under the Federal Advisory Committee Act (FACA), 5 U.S.C., App. 2. Pursuant to FACA and EPA policy, notice is hereby given that the CASAC AMMS CASAC AMMS will hold a public teleconference to discuss the Subcommittee's draft peer review report of the EPA's draft monitoring documents for NO_X and SO_X.

The AMMS met on February 16, 2011 to review EPA's draft monitoring documents for NO_X and SO_X and proposed methods for assessing levels of nitrogen and sulfur deposition. [**Federal Register** Notice dated January 25, 2011 (76 FR 4346)]. Materials from the February 2011 meeting are posted on the SAB Web site at *http://yosemite.epa.gov/sab/sabproduct.nsf/bf498bd32a1c7fdf8525724 2006dd6cb/eea38cc34cc1f86f8525781d005866e6!OpenDocument&Date=2011-02-16.* The purpose of the March 29, 2011 teleconference call is for the AMMS to discuss its draft peer review report.

Availability of Meeting Materials: The agenda and materials in support of this teleconference call will be placed on the EPA CASAC Web site at *http://www.epa.gov/casac* in advance of the teleconference call.

Procedures for Providing Public Input: Interested members of the public may submit relevant written or oral information on the topic of this advisory activity for the CASAC to consider during the advisory process. *Oral Statements:* In general, individuals or groups requesting an oral presentation at this public teleconference will be limited to three minutes per speaker. Interested parties should contact Mr. Edward Hanlon, DFO, in writing (preferably via e-mail), at the contact information noted above, by March 22, 2011 to be placed on the list of public speakers for the teleconference. *Written Statements:* Written statements should be received in the SAB Staff Office by March 22, 2011 so that the information may be made available to the CASAC AMMS for their consideration. Written statements should be supplied to the DFO in the following formats: one hard copy with original signature, and one electronic copy via e-mail (acceptable file format: Adobe Acrobat PDF, WordPerfect, MS Word, MS PowerPoint, or Rich Text files in IBM–PC/Windows 98/2000/XP format). Submitters are requested to provide two versions of each document submitted with and without signatures, because the SAB Staff Office does not publish documents with signatures on its Web sites.

Accessibility: For information on access or services for individuals with disabilities, please contact Mr. Edward Hanlon at the phone number or e-mail address noted above, preferably at least ten days prior to the meeting, to give EPA as much time as possible to process your request.

Dated: March 2, 2011.

Anthony F. Maciorowski,

Deputy Director, EPA Science Advisory Board Staff Office.

[FR Doc. 2011–5202 Filed 3–7–11; 8:45 am]

BILLING CODE 6560–50–P

EQUAL EMPLOYMENT OPPORTUNITY COMMISSION

Sunshine Act Notice

AGENCY HOLDING THE MEETING: Equal Employment Opportunity Commission.

DATE AND TIME: Tuesday, March 15, 2011, 1 p.m. Eastern Time.

PLACE: Commission Meeting Room on the First Floor of the EEOC Office Building, 131 "M" Street, NE., Washington, DC 20507.

STATUS: The meeting will be open to the public.

MATTERS TO BE CONSIDERED:

Open Session

1. Announcement of Notation Votes, and
2. Employment of People with Mental Disabilities.

Note: In accordance with the Sunshine Act, the meeting will be open to public observation of the Commission's deliberations and voting. Seating is limited and it is suggested that visitors arrive 30 minutes before the meeting in order to be processed through security and escorted to the meeting room. (In addition to publishing notices on EEOC Commission meetings in the **Federal Register**, the Commission also provides information about Commission meetings on its Web site, *http://www.eeoc.gov.,* and provides a recorded announcement a week in advance on future Commission sessions.)

Please telephone (202) 663–7100 (voice) and (202) 663–4074 (TTY) at any time for information on these meetings. The EEOC provides sign language interpretation and Communication Access Realtime Translation (CART) services at Commission meetings for individuals who are deaf or hard of hearing. Requests for other reasonable accommodations may be made by using the voice and TTY numbers listed above.

CONTACT PERSON FOR MORE INFORMATION: Stephen Llewellyn, Executive Officer on (202) 663–4070.

Dated: March 4, 2011.

Stephen Llewellyn,

Executive Officer, Executive Secretariat.

[FR Doc. 2011–5361 Filed 3–4–11; 4:15 pm]

BILLING CODE 6570–01–P

FEDERAL COMMUNICATIONS COMMISSION

[EB Docket No. 10–247; DA 11–246]

Shenzhen Tangreat Technology Co., Ltd., Grantee of Equipment Authorization FCC ID No. XRLTG–VIPJAMM

AGENCY: Federal Communications Commission.

ACTION: Notice.

SUMMARY: This document commences a hearing proceeding by directing Shenzhen Tangreat Technology Co., Ltd. ("Shenzhen"), Grantee of Equipment Authorization FCC ID No. XRLTG–VIPJAMM, to show cause why the equipment authorization FCC ID No. XRLTG–VIPJAMM should not be revoked and why a Forfeiture Order in an amount not to exceed one hundred and twelve thousand five hundred dollars ($112,500) should not be issued against Shenzhen for apparent false

statements or representations made in either its application for this equipment authorization or in materials or responses submitted therewith; the manufacture and marketing of equipment that does not conform to the pertinent technical requirements or representations made in its application for authorization; and/or changes made in such equipment that are not authorized by the Commission.

DATES: Petitions by parties desiring to participate as a party in the hearing, pursuant to 47 CFR 1.223, may be filed on or before April 7, 2011. *See* **SUPPLEMENTARY INFORMATION** section for dates when named parties should file appearances.

ADDRESSES: Please file documents with the Office of the Secretary, Federal Communications Commission, 445 12th Street, SW., Washington, DC 20554. Each document that is filed in this proceeding must display the document number of this hearing, EB Docket No. 10–247, on the front page.

FOR FURTHER INFORMATION CONTACT: Kevin Pittman, Spectrum Enforcement Division, Enforcement Bureau, Federal Communications Commission at (202) 418–1160.

SUPPLEMENTARY INFORMATION: This is the full text of the Order to Show Cause and Notice of Opportunity for Hearing ("Order to Show Cause"), DA 11–246, released February 9, 2011. The full text of the Order to Show Cause is also available for inspection and copying from 8 a.m. until 4:30 p.m., Monday through Thursday or from 8 a.m. until 11:30 a.m. on Friday at the FCC Reference Information Center, Portals II, Room CY–A257, 445 12th Street, SW., Washington, DC 20554. The complete text may be purchased from the Commission's copy contractor, Best Copy and Printing, Inc. (BCPI), Portals II, 445 12th Street, SW., Room CY–B402, Washington, DC 20554, telephone (800) 378–3160, facsimile (202) 488–5563, e-mail *FCC@BCPIWEB.com,* or you may contact BCPI via its Web site, *http://www.bcpiweb.com.* When ordering documents from BCPI, please provide the appropriate FCC document number, DA 11–246. The Order to Show Cause is also available on the Internet at the Commission's Web site through its Electronic Document Management System (EDOCS): *http://hraunfoss.fcc.gov/edocs_public/.* Alternative formats are available to persons with disabilities (Braille, large print, electronic files, audio format); to obtain, please send an e-mail to *fcc504@fcc.gov* or call the Consumer and Governmental Affairs Bureau at (202) 418–0530 (voice), (202) 418–0432 (TTY).

Order To Show Cause

I. Introduction

1. In this *Order to Show Cause,* we commence a hearing proceeding pursuant to sections 1.91 and 2.939 of the Commission's rules ("Rules") [1] regarding the device manufactured and marketed under FCC ID No. XRLTG–VIPJAMM with the brand name "TxTStopper™".[2] The TxTStopper™ device was marketed in the United States and apparently has the capability to block, jam, or otherwise interfere with the operation of authorized wireless communications, in violation of sections 302(b) and 333 of the Communications Act of 1934, as amended ("Act").[3] Moreover, based on the evidence, the TxTStopper™ device marketed under FCC ID No. XRLTG–VIPJAMM is not identical to the device authorized under that FCC ID, in violation of section 2.931 of the Rules.[4] We further note that jamming devices pose an unacceptable risk to public safety and emergency communications, including interfering with the ability to make 9–1–1 and other emergency calls and hindering law enforcement communications. We therefore direct Shenzhen Tangreat Technology Co., Ltd. ("Shenzhen") to show cause why the equipment authorization it holds under FCC ID No. XRLTG–VIPJAMM should not be revoked and why a Forfeiture Order in an amount not to exceed one hundred and twelve thousand five hundred dollars ($112,500) should not be issued against Shenzhen for willfully and/or repeatedly violating sections 302(b) and 333 of the Act and sections 2.803, 2.907(b), 2.931, 2.932, 2.936 and 2.946 of the Rules.[5]

II. Background

2. In response to complaints regarding the marketing of a radio frequency device called the TxTStopper™ that is advertised as preventing cell phone use in moving motor vehicles, the Spectrum Enforcement Division ("Division") of the FCC's Enforcement Bureau ("Bureau") launched an investigation. The Division staff observed that the txtstopper.com Web site describes the TxTStopper™ as a "state of the art, hard wired mobile electronic device that totally prevents cell phone use while the vehicle is in drive mode." [6] The Web site indicates that the TxTStopper™ works with any U.S.-based cell phone; that the TxTStopper™ prevents anyone in the vehicle from making or receiving cell phone calls and sending or receiving text messages or e-mails on their cell phones within the "TXTSafe Zone™"; and that once installed, the TxTStopper™ cannot be intentionally or accidentally disabled by the driver.[7] The Web site also includes testimonials from four individuals located in the United States who apparently purchased the TxTStopper™ and had the device installed in their motor vehicles.[8]

3. On July 20, 2010, the Division issued a letter of inquiry ("LOI") to Share Enterprises Unlimited, Inc. ("Share"), the company that operates the txtstopper.com Web site.[9] The LOI directed Share to respond to certain inquiries within 30 days and to ship a sample of the TxTStopper™ device to the FCC's Office of Engineering and Technology ("OET") Laboratory for testing within 14 days.[10] Share responded to the LOI on September 6, 2010.[11] In its LOI Response, Share stated that it began "market research" of the TxTStopper™ on July 1, 2010, in

[1] 47 CFR 1.91, 2.939.

[2] Consistent with the Commission's rules and procedures, the portion of the FCC ID describing the relevant product or device (in this case, "TG–VIPJAMM") is assigned by the grantee or applicant.

[3] 47 U.S.C. 302a(b), 333.

[4] 47 CFR 2.931.

[5] 47 U.S.C. 302a(b), 333; 47 CFR 2.803, 2.907(b), 2.931, 2.932, 2.936, 2.946. We are simultaneously issuing a citation to Share Enterprises, the company that marketed the TxTStopper™ device in the United States, for violations of sections 302(b) of the Act and sections 1.17 and 2.803 of the Rules. *See Share Enterprises Unlimited, Inc.,* Citation, DA 11–247, February 9, 2011.

[6] TxTStopper™ Web site, at *http://www.txtstopper.com/cms* (visited June 29, 2010 and October 18, 2010); *see also* TxTStopper on CNN at *http://www.youtube.com/watch?v=io8AtlGRjpQ.*

[7] *See id.* at *http://www.txtstopper.com/cms/content/faqs* (visited June 29, 2010 and October 18, 2010).

[8] *See id.* at *http://www.txtstopper.com/cms/* (Testimonials from Tina S., Atlanta, GA ("With TxTStopper™ I can rest easy knowing that [my daughter] won't be distracted by her cell phone while she's behind the wheel."); Tony W., Canton, GA ("TxTStopper™ is the only product in the market that totally restricts cell phone use in my son's car * * * and it works like a charm!"); Earnest M., Chicago, IL ("[W]ith the TxTStopper™ in place, I know [my daughter] is a safer driver."); Bebe C., Cincinnati, OH ("Thank you TxTStopper™. I just purchased a unit for my granddaughter's vehicle and it works great!")) (visited June 30, 2010 and September 8, 2010).

[9] *See* Letter from Kathryn S. Berthot, Chief, Spectrum Enforcement Division, Enforcement Bureau, Federal Communications Commission, to Terrence Williams, CFO, Share Enterprises Unlimited, Inc. (July 20, 2010).

[10] *See id.*

[11] *See* Letter from Terrence Williams, Principal, Share Enterprises Unlimited, Inc., to Samantha Peoples, Spectrum Enforcement Division, Enforcement Bureau, Federal Communications Commission (September 6, 2010) ("LOI Response"). On August 18, 2010, the Enforcement Bureau granted Share's request for an extension of time to respond to the LOI, setting a new response date of September 7, 2010.

response to a new Georgia law that bans texting while driving as well as to other global initiatives intended to eliminate cell phone use while operating a motor vehicle.[12] Share stated that the TxTStopper™ "by design and function (unidirectional signal) is to be a custom designed in-vehicle accident avoidance/occupant safety system designed to operate in a strictly limited area—ONLY inside an owner's personal vehicle and only when the vehicle is in drive mode."[13] According to Share, only phones inside the vehicle in which the TxTStopper™ is installed are affected and the TxTStopper™ creates no outside interference.[14] Share further asserted that the TxTStopper™ does not interfere with the user's ability to make 9–1–1 calls at any time.[15]

4. However, Share did not provide any technical explanation or other evidence to substantiate its claims that the TxTStopper™ device only affects phones inside the vehicle where the device is installed, that the device does not create interference beyond the vehicle, and that while blocking all cell phone communications, the device nevertheless allows users to make 9–1–1 calls. Instead, Share simply stated that it was not the manufacturer of the device and that it obtained the TxTStopper™ "beta test units" from a supplier located in China.[16] Share indicated that it had offered only three units of the TxTStopper™ during its market research efforts and that those three units were shipped directly from the overseas supplier to the end user.[17] Share also claimed that the TxTStopper™ was certified by the FCC under FCC ID No. XRLTG–VIPJAMM.[18] Finally, Share maintained that it was unable to provide the requested sample of the TxTStopper™ because research and development and beta testing of the device were ongoing by various manufacturer engineers and a prototype was pending.[19]

5. At the Bureau's request, OET subsequently reviewed the equipment certification granted under FCC ID No. XRLTG–VIPJAMM and the underlying application and supporting documents.[20] OET observed certain apparent discrepancies between the application, test report, and equipment certification as to the nature and purpose of the device. Specifically, the device approved under the certification, which was issued to Shenzhen[21] by a Telecommunications Certification Body ("TCB")[22] on October 20, 2009, was purportedly a Part 15, Class B computer peripheral.[23] The application for the device also listed the equipment class as "JBP—Part 15 Class B computing peripheral"[24] and included the following description of the product: "computer peripheral for preprocessing data."[25] Similarly, the test report[26] and other data submitted with the application for this device show that the device was tested when connected to a personal computer and the AC power line, and that there were no emissions other than those associated with a digital device.[27] Contrary to this evidence, however, the test report described the equipment being tested as an "RF Jammer", and apparently this description was erroneously reproduced in the "Notes" section of the equipment certification.[28]

6. On September 7, 2010, OET sent a letter to the TCB that issued the grant of certification under FCC ID No. XRLTG–VIPJAMM, seeking information as to whether the device was in fact an intentional radiator[29] and an illegal jammer and requesting an explanation for the conflicting information on the face of the certification.[30] In its response, the TCB indicated that the application for the device was marked as a JBP application, which indicates that the device is intended to be used as a Part 15 Class B computing device peripheral.[31] The TCB noted that after examining the block diagram and schematics originally submitted with the application, it determined that the device appeared to have an accompanying receiver. The TCB further stated that prior to certifying the device, it had sought clarification about this inconsistency and placed a hold on the application.[32] The applicant responded by resubmitting the application with revised exhibits that removed the receiver circuitry from the application. The TCB then continued its review of the application in reliance on the applicant's representations, concluding in good faith that the device was strictly a computer peripheral without any receiving or transmitting circuitry.[33] The TCB also stated that it considered the description of the device "RF Jammer" to be a misnomer and therefore proceeded with grant of the application.[34]

[12] *Id.* at 1.

[13] *Id.* at 2.

[14] *See id.*

[15] *See id.*

[16] *Id.* at 1. Share identified its supplier as Chinazrh International Co., Ltd. ("Chinazrh"). *See id.* It is unclear what relationship exists between Chinazrh and Shenzhen.

[17] *See id.* at 2.

[18] *See id.*

[19] *See id.*

[20] The equipment certification under FCC ID No. XRLTG–VIPJAMM was granted to Shenzhen on October 20, 2009. *See https://fjallfoss.fcc.gov/oetcf/eas/reports/GenericSearch.cfm.*

[21] As the grantee of the certification issued under FCC ID No. XRLTG–VIPJAMM, Shenzhen is the party responsible for ensuring that the device complies with all applicable regulations. *See* 47 CFR 2.909(a).

[22] A Telecommunications Certification Body ("TCB") is a private entity designated by the Commission to approve equipment subject to certification. TCBs, which are accredited by the National Institute of Standards and Technology, process equipment certification applications to determine whether the product meets the Commission's requirements and, if so, issue a written grant of equipment authorization. *See* 47 CFR 2.960, 2.962.

[23] A peripheral device is [a]n input/output unit of a system that feeds data into and/or receives data from the central processing unit of a digital device. Peripherals to a digital device include any device that is connected external to the digital device, any device internal to the digital device that connects the digital device to an external device by wire or cable, and any circuit board designed for interchangeable mounting, internally or externally, that increases the operating or processing speed of a digital device, *e.g.,* 'turbo' cards and 'enhancement' boards. Examples of peripheral devices include terminals, printers, external floppy disk drives and other data storage devices, video monitors, keyboards, interface boards, external memory expansion cards, and other input/output devices that may or may not contain digital circuitry.

47 CFR 15.3(r).

[24] "JBP" is the equipment class code assigned by the Commission to designate Part 15 Class B Computing Device Peripherals on FCC Form 731, Application for Equipment Authorization. *See https://fjallfoss.fcc.gov/oetcf/eas/index.cfm.*

[25] Shenzhen Tangreat Technology Co., Ltd., Application for Equipment Authorization FCC Form 731 TCB Version.

[26] Shenzhen BST Technology Co., Ltd., a test laboratory authorized to perform certification testing pursuant to section 2.948 of the Rules, 47 CFR 2.948, conducted the test and prepared the test report. *See https://fjallfoss.fcc.gov/oetcf/eas/reports/ViewExhibitReport.cfm?mode=Exhibits&RequestTimeout=500&calledFromFrame=N&application_id=754164&fcc_id='XRLTG-VIPJAMM'.*

[27] *See id.*

[28] *See* FCC ID No. XRL–TGVIPJAMM, at *https://fjallfoss.fcc.gov/oetcf/eas/reports/GenericSearch.cfm.* On September 30, 2010, OET conformed the certification issued under FCC ID No. XRLTG–VIPJAMM to reflect the actual device that was submitted for testing, substituting "Computer peripheral for preprocessing data" for "RF Jammer" under the "Notes" section of the certification.

[29] An intentional radiator is a "device that intentionally generates and emits radio frequency energy by radiation or induction." 47 CFR 15.3(o).

[30] *See* Letter from Raymond LaForge, Chief, Auditing and Compliance Branch, Office of Engineering and Technology Laboratory, Federal Communications Commission, to Timco Engineering, Inc. (September 7, 2010).

[31] *See* E-mail from Gretchen Greene, Timco Engineering, Inc., to Raymond LaForge, Chief, Auditing and Compliance Branch, Office of Engineering and Technology Laboratory, Federal Communications Commission (September 17, 2010).

[32] *See id.*

[33] *See id.*

[34] *See id.* In addition, the TCB noted that it requested a surveillance sample of the device from the test lab on July 6, 2010, but did not receive a sample in response to its request. Further, the TCB

Continued

7. On September 9, 2010, OET sent a letter to Shenzhen, the grantee of the certification at issue in this Order, requesting that it provide an explanation within 30 days as to why the application was submitted to the TCB as a JBP application for a Part 15 Class B computing peripheral device, when it appeared to be an intentional radiator that could transmit radio signals.[35] On September 16, 2010, OET sent another letter to Shenzhen directing it to submit a sample of the device certified under FCC ID No. XRLTG–VIPJAMM to the OET Laboratory for testing within 30 days.[36] To date, Shenzhen has not responded to the letters from OET or submitted the requested sample.

8. On November 2, 2010, agents from the Bureau's Atlanta, Georgia Field Office observed a unit of the TxTStopper™ that had been installed in a vehicle owned by Just Driver Training, a driver's education training school located in Canton, Georgia. Tests conducted by the agents indicated that the TxTStopper™ is in fact a cellular/PCS jammer and that when installed in a vehicle the TxTStopper™ is capable of blocking cellular communications initiated from both inside and outside of the vehicle,[37] apparently including 9–1–1 and other emergency calls.

III. Discussion

A. Applicable Legal Standard

9. The Commission follows the same procedures in revoking an equipment authorization as it does when revoking a radio station license.[38] Pursuant to section 312(c) of the Act, before revoking a radio station license, the Commission must serve the licensee with an order to show cause why an order of revocation should not be issued and must provide the licensee with an opportunity for hearing.[39]

10. Section 2.939(a)(1) of the Rules authorizes the Commission to revoke any equipment authorization for "false statements or representations made either in the application or in materials or response submitted in connection therewith."[40] Section 2.939(a)(2) of the Rules, moreover, provides that the Commission may revoke any equipment authorization "[i]f upon subsequent inspection or operation it is determined that the equipment does not conform to the pertinent technical requirements or to the representations made in the original application."[41] Section 2.939(a)(3) of the Rules also authorizes revocation "[i]f it is determined that changes have been made in the equipment other than those authorized by the rules or otherwise expressly authorized by the Commission."[42] Furthermore, section 2.939(a)(4) of the Rules provides that the Commission may revoke an equipment authorization upon discovery of conditions which would warrant its refusal to grant an original application.[43] This *Order to Show Cause* is predicated on Shenzhen's apparent willful and repeated violation of the Act and the Rules, including evidence that the original application for certification was tainted by misrepresentations and/or that unauthorized changes were made to the TxTStopper™ device post-certification.

11. Grant of an application for equipment certification is governed by section 2.915 of the Rules, which requires that the grant serve the public interest and that the device comply with the pertinent technical rules, in this case, sections 2.803(a), 2.931, and 15.201.[44] Section 333 of the Act, moreover, states that "[n]o person shall willfully or maliciously interfere with or cause interference to any radio communications of any station licensed or authorized by or under this Act or operated by the United States Government."[45] In addition, section 302(b) of the Act provides that "[n]o person shall manufacture, import, sell, offer for sale, or ship devices or home electronic equipment and systems, or use devices, which fail to comply with regulations promulgated pursuant to this section."[46] Section 2.803(a)(1) of the Commission's implementing regulations provides that:

> no person shall sell or lease, or offer for sale or lease (including advertising for sale or lease), or import, ship, or distribute for the purpose of selling or leasing or offering for sale or lease, any radio frequency device unless * * * [i]n the case of a device subject to certification, such device has been authorized by the Commission in accordance with the rules in this chapter and is properly identified and labeled as required by section 2.925 and other relevant sections in this chapter.[47]

Additionally, section 2.803(g) of the Rules provides in relevant part that:

> radio frequency devices that could not be authorized or legally operated under the current rules * * * shall not be operated, advertised, displayed, offered for sale or lease, sold or leased, or otherwise marketed absent a license issued under part 5 of this chapter or a special temporary authorization issued by the Commission.[48]

Pursuant to section 15.201(b) of the Rules,[49] before intentional radiators[50] can be marketed in the United States, they must be authorized in accordance with the Commission's certification procedures. Radio frequency jammers, however, are a type of intentional radiator that cannot be lawfully certified because the main purpose of a jammer is to block or interfere with radio communications in violation of section 333 of the Act.

12. Furthermore, under section 2.907(b) of the Rules, a certification attaches to all units subsequently marketed by the grantee which are identical to the sample tested except for permissive changes or other variations authorized by the Commission.[51] Section 2.931 of the Rules provides that "[i]n accepting a grant of equipment authorization, the grantee warrants that each unit of equipment marketed under such grant and bearing the identification specified in the grant will conform to the unit that was measured and that the data * * * filed with the application for certification continues to be representative of the equipment being produced under such grant * * *"[52] Accordingly, devices that are not identical to the sample tested as part of an application for certification are not covered by the grant of certification and

stated that upon receiving the letter from OET, it advised the test lab of OET's request for further information regarding the device and that the test lab subsequently informed the TCB that it tried to contact Shenzhen, but received no response. *See id.*

[35] *See* Letter from Raymond LaForge, Chief, Auditing and Compliance Branch, Office of Engineering and Technology Laboratory, Federal Communications Commission, to Junrong Jiang, General Manager, Shenzhen Tangreat Technology Co., Inc. (September 9, 2010). The letter was sent to the e-mail address listed in Shenzhen's equipment authorization application, *tangreat@tangreat.com*.

[36] *See* Letter from Raymond LaForge, Chief, Auditing and Compliance Branch, Office of Engineering and Technology Laboratory, to Shenzhen Tangreat Technology Co., Inc. (September 16, 2010). Under section 2.945 of the Rules, the Commission may require responsible parties to submit equipment samples in order to determine the extent to which subsequent production of such equipment continues to comply with the data filed by the applicant. 47 CFR 2.945.

[37] Field tests indicate that calls are blocked within a 150-foot radius of the vehicle.

[38] *See* 47 CFR 2.939(b) ("Revocation of an equipment authorization shall be made in the same manner as revocation of radio station licenses.").

[39] 47 U.S.C. 312(c).

[40] 47 CFR 2.939(a)(1).

[41] *Id.* sec. 2.939(a)(2).

[42] *Id.* sec. 2.939(a)(3).

[43] *Id.* sec. 2.939(a)(4).

[44] *Id.* sec. 2.803, 2.915, 2.931, 15.201.

[45] 47 U.S.C. 333.

[46] *Id.* sec. 302a(b).

[47] 47 CFR 2.803(a)(1).

[48] *Id.* sec. 2.803(g).

[49] *Id.* sec. 15.201(b).

[50] *See supra* note 29 defining "intentional radiator."

[51] 47 CFR 2.907(b).

[52] *Id.* sec. 2.931.

may not lawfully be marketed in the United States.

B. Analysis of Relevant Facts

13. First, revocation is apparently warranted under section 2.939(a)(4) of the Rules, based on facts that have come to light, which had they been known to the Commission would have precluded the original grant. As detailed above and based on the field tests conducted by Bureau staff, the TxTStopper™—the device apparently being marketed under FCC ID No. XRLTG–VIPJAMM—can prevent anyone in a vehicle in which it is installed from making or receiving cell phone calls or sending or receiving text messages or e-mails on a cell phone, and also can block calls made from outside the vehicle, apparently including 9–1–1 and other emergency calls.[53] Thus, this device is a radio frequency jammer, which interferes with or blocks authorized radio signals in violation of section 333 of the Act and cannot be authorized or marketed in the United States under section 302(b) of the Act and section 2.803 of the Rules.[54]

14. Second, revocation is apparently warranted under sections 2.939(a)(1)–(3) of the Rules, given the apparent misrepresentations in the application and related materials, the substantial differences between the device that was approved under FCC ID No. XRLTG–VIPJAMM and the device that has been marketed as the TxTStopper™ under this FCC ID, and the unauthorized changes that apparently were made to the device.[55] The evidence indicates that the device marketed under FCC ID No. XRLTG–VIPJAMM is an intentional radiator with a transmitter circuit designed to block, jam, or otherwise interfere with radio communications. In addition, the information submitted by the grantee in the application for the device certified under FCC ID No. XRLTG–VIPJAMM misled the certification body and caused them to conclude the opposite—that the device is an unintentional radiator, a Part 15 Class B computer peripheral.[56] Specifically, the Commission's review of the test report and other data submitted with the application indicates that the device approved under FCC ID No. XRLTG–VIPJAMM was tested when connected to a personal computer and the AC power line (rather than in a motor vehicle) and that it did not have any circuitry for receiving or transmitting radio signals. By contrast, the TxTStopper™ device that is being marketed by Share Enterprises under FCC ID No. XRLTG–VIPJAMM is clearly intended for use in a motor vehicle and is apparently powered by the car battery.[57] Accordingly, it appears that the device marketed under FCC ID No. XRLTG–VIPJAMM is not identical to the sample tested as part of the application for certification, nor does it conform to the representations made in the original applications. Therefore, it cannot legally be marketed under section 302(b) of the Act and sections 2.803, 2.907(b) and 2.931 of the Rules.[58]

15. Based on the foregoing, it appears (a) that the Commission would be warranted in refusing to grant an original application for equipment authorization for the device certified under FCC ID No. XRLTG–VIPJAMM;[59] (b) that false statements or representations may have been made either in the application or supporting materials for the device certified under FCC ID No. XRLTG–VIPJAMM;[60] (c) that the device marketed under FCC ID No. XRLTG–VIPJAMM does not conform to the pertinent technical requirements or to the representations made in the original application;[61] and/or (d) that changes have been made to the device other than those authorized by the rules or otherwise expressly authorized by the Commission.[62] In sum, a substantial and material question of fact exists as to whether the device in question should have been certified.

16. The Commission has repeatedly sought from the manufacturer additional information that would counter or explain the evidence. Shenzhen has not responded, as the Act and our Rules require,[63] to any of the Commission's requests. Shenzhen's failure to respond to the initial OET letter directing the company to provide information regarding the device constitutes an apparent violation of a Commission order.[64] Numerous Commission decisions have reaffirmed the Commission's authority to investigate potential misconduct and punish those that disregard FCC inquiries.[65] Likewise, Shenzhen's failure to comply with OET's directive to provide a sample of the device being marketed under FCC ID No. XRLTG–VIPJAMM apparently violates sections 2.936 and 2.946 of the Rules.[66] Pursuant to section 2.936 of the Rules, a responsible party must, upon reasonable request from the Commission, submit a sample unit of the equipment covered under an authorization.[67] Similarly, pursuant to

[53] *See supra* n.37 (noting that calls are blocked within a 150-foot radius of the vehicle). The importance of preserving public safety and emergency communications free of jamming signals cannot be overstated and is reflected in the Commission's investigations and enforcement actions in this area. *See, e.g., Phonejammer.com,* Notice of Apparent Liability for Forfeiture, 25 FCC Rcd 3827 (Enf. Bur. Apr. 20, 2010) (initiating a $25,000 forfeiture proceeding against the company for marketing jammers designed to interfere with cellular and "PCS" utilized by St. Lucie County, Florida Sheriff's Office); *Everybuying.com,* Citation, DA 10–2295 (Enf. Bur. Dec. 6, 2010) (citing the company for marketing both cell phone signal and Global Positioning System ("GPS") signal blocker devices, and noting that GPS signal blockers operate within restricted frequency bands listed in Section 15.205(a) of the Rules); *Jammerworld.com,* Citation, DA 10–2240, 2010 WL 4808497 (Enf. Bur. Nov. 26, 2010) (citing the company for marketing a device that jams signals in the Cell Phone Band (845–975 MHz), PCS Band (1800–1996 MHz), and GPS L1 frequency 1575.42 MHz); *Victor McCormack, phonejammer.com,* Citation, DA 10–1975 (Enf. Bur. Oct. 14, 2010) (citing the company for misrepresentations made during the course of an investigation of Phonejammer.com's sale of jammer devices); *Anoy Wray,* Notice of Unlicensed Operation, Document Number W201032380068 (Enf. Bur., May 18, 2010) (citing Mr. Wray for using radio transmitting device designed to jam GPS transmissions); *Gene Stinson d.b.a. D&G Food Mart,* Notice of Unauthorized Operation and Interference to Licensed Radio Stations, Document Number W200932500003 (Enf. Bur. Aug. 13, 2009) (citing the company for use of two radio transmitting devices designed to jam licensed radio communications transmission in the 850–894 MHz and other licensed frequency bands used by City of Oklahoma City Radio System).

[54] 47 U.S.C. 302a(b), 333; 47 CFR 2.803.

[55] 47 CFR 2.939(a)(1)–(3).

[56] *See id.* sec. 15.101–15.124.

[57] According to the txtstopper.com Web site, TxTStopper™ is "a simple 12v device and is easily installed in less than 1 hour by your local professional car stereo/auto alarm technician." *http://www.txtstopper.com/cms/content/faqs* (visited June 29, 2010 and October 18, 2010).

[58] 47 U.S.C. 302a(b); 47 CFR 2.803, 2.907(b), 2.931.

[59] *See* 47 CFR 2.939(a)(4).

[60] *See id.* sec. 2.939(a)(1).

[61] *See id.* sec. 2.939(a)(2).

[62] *See id.* sec. 2.939(a)(3).

[63] The Commission has broad investigatory authority under Sections 4(i), 4(j), and 403 of the Act, its rules, and relevant precedent. Section 4(i) authorizes the Commission to "issue such orders, not inconsistent with this Act, as may be necessary in the execution of its functions." 47 U.S.C. 154(i). Section 4(j) states that "the Commission may conduct its proceedings in such manner as will best conduce to the proper dispatch of business and to the ends of justice." *Id.* sec. 154(j). Section 403 grants the Commission "full authority and power at any time to institute an inquiry, on its own motion, in any case and as to any matter * * * relating to the enforcement of any of the provisions of this Act." *Id.* sec. 403.

[64] *See id.* sec. 503(b)(1)(B).

[65] *See, e.g., SBC Communications Inc.,* Forfeiture Order, 17 FCC Rcd 7589, 7599–7600 (2002) (ordering $100,000 forfeiture for egregious and intentional failure to certify the response to a Bureau inquiry); *Fox Television Stations,* Notice of Apparent Liability for Forfeiture, 25 FCC Rcd 7074 (Enf. Bur. 2010) (proposing a $25,000 forfeiture for failure to respond to a Bureau letter of inquiry); *BigZoo.Com Corporation,* Forfeiture Order, 20 FCC Rcd 3954 (Enf. Bur. 2005) (ordering $20,000 forfeiture for failure to respond to a letter of inquiry); *Digital Antenna, Inc.,* Notice of Apparent Liability for Forfeiture and Order, 23 FCC Rcd 7600, 7602 (Spec. Enf. Div., Enf. Bur. 2008) (proposing $11,000 forfeiture for failure to provide a complete response to a letter of inquiry).

[66] 47 CFR 2.936, 2.946.

[67] *Id.* sec. 2.936.

section 2.945 of the Rules, the Commission may request a responsible party such as Shenzhen to submit equipment "to determine the extent to which subsequent production of such equipment continues to comply with the data filed by the applicant."[68] Under section 2.946 of the Rules, "[a]ny responsible party * * * shall provide test sample(s) or data upon request by the Commission" and "[f]ailure to comply with such a request within 14 days may be cause for forfeiture."[69] Shenzhen's silence serves only to reinforce the substantial questions that have been raised regarding whether the TxTStopper™ device marketed under FCC ID No. XRLTG–VIPJAMM is identical to the device actually approved under that FCC ID.

17. Accordingly, we are designating this matter for hearing before an Administrative Law Judge to determine whether the equipment authorization held by Shenzhen under FCC ID No. XRLTG–VIPJAMM should be revoked on some or all of the bases outlined herein and whether a Forfeiture Order in an amount not to exceed one hundred and twelve thousand five hundred dollars ($112,500) should be issued.

IV. Ordering Clauses

18. Accordingly, *it is ordered* that, pursuant to sections 312(a) and (c) of the Act,[70] and authority delegated pursuant to sections 0.111, 0.311, 1.91(a) and 2.939(b) of the Rules,[71] Shenzhen Tangreat Technology Co., Ltd. is hereby *ordered to show cause* why its equipment authorization, FCC ID No. XRLTG–VIPJAMM, *should not be revoked.* Shenzhen *shall appear* before an Administrative Law Judge at a time and place to be specified in a subsequent order and give evidence upon the following issues:

(a) To determine whether the device marketed under FCC ID No. XRLTG–VIPJAMM is capable of interfering with or blocking authorized radio signals in violation of section 333 of the Act and therefore cannot legally be authorized or marketed under section 302(b) of the Act and section 2.803 of the Rules;

(b) To determine whether the device marketed under FCC ID No. XRLTG–VIPJAMM is not identical to the device authorized under FCC ID No. XRLTG–VIPJAMM and therefore cannot legally be marketed under section 302(b) of the Act and sections 2.803, 2.907(b), and 2.931 of the Rules;

(c) To determine whether the device marketed under FCC ID No. XRLTG–VIPJAMM does not conform to the pertinent technical requirements or to the representations made in the original application (*see* section 2.939(a)(2));

(d) To determine whether changes were made to the device certified under equipment authorization FCC ID No. XRLTG–VIPJAMM other than those authorized by the rules or otherwise expressly authorized by the Commission (*see* section 2.939(a)(3));

(e) To determine whether Shenzhen made false statements or representations either in the application or in materials submitted in connection therewith (*see* section 2.939(a)(1));

(f) To determine whether the Commission would be warranted in refusing to grant an original application for equipment authorization for the device certified under FCC ID No. XRLTG–VIPJAMM (*see* section 2.939(a)(4));

(g) To determine whether Shenzhen willfully violated sections 2.936 and 2.946 of the Rules by failing to provide a test sample of the device being marketed under FCC ID No. XRLTG–VIPJAMM upon request by the Commission, and otherwise willfully failed to respond to a Commission request for information regarding the device; and

(h) To determine, in light of the evidence adduced pursuant to the foregoing issues, whether the equipment authorization held by Shenzhen under FCC ID No. XRLTG–VIPJAMM should be revoked.

19. *It is further ordered* that, irrespective of the resolution of the foregoing issues, it shall be determined, pursuant to section 503(b)(3)(A) of the Act, 47 U.S.C. 503(b)(3)(A), and section 1.80 of the Rules, 47 CFR 1.80, whether a Forfeiture Order in an amount not to exceed one hundred and twelve thousand five hundred dollars ($112,500) shall be issued against Shenzhen Tangreat Technology Co., Ltd. for willfully and/or repeatedly violating sections 302(b) and 333 of the Act and sections 2.803, 2.907(b), 2.931, 2.932, 2.936 and 2.946 of the Rules.[72]

20. *It is further ordered* that, in connection with the possible forfeiture liability noted above, this document constitutes notice of an opportunity for hearing, pursuant to section 503(b)(3)(A) of the Act and section 1.80 of the Rules.

21. *It is further ordered* that, pursuant to section 312(c) of the Act and sections 1.91(c) and 2.939(b) of the Rules,[73] to avail itself of the opportunity to be heard and to present evidence at a hearing in this proceeding, Shenzhen, in person or by an attorney, *shall file* with the Commission, within thirty (30) days of the release of this Order to Show Cause, a written appearance stating that it will appear at the hearing and present evidence on the issues specified above.

22. *It is further ordered* that, pursuant to section 312(c) of the Act and sections 1.92(c) and 2.939(b) of the Rules,[74] if Shenzhen fails to file a timely notice of appearance within the thirty (30) day period, or has not filed a petition to accept, for good cause shown, a written appearance beyond the expiration of the thirty (30)-day period, its right to a hearing *shall be deemed to be waived.* In the event that Shenzhen waives its right to a hearing, the presiding Administrative Law Judge *shall,* at the earliest practicable date, *issue* an order reciting the events or circumstances constituting a waiver of hearing, terminating the hearing proceeding, and certifying the case to the Commission.

23. *It is further ordered* that the Chief, Enforcement Bureau, shall be made a party to this proceeding without the need to file a written appearance.[75]

24. *It is further ordered* that, pursuant to section 312(d) of the Act and sections 1.91(d) and 2.939(b) of the Rules,[76] the burden of proceeding with the introduction of evidence and the burden of proof with respect to the issues specified above shall be on the Chief, Enforcement Bureau.

25. *It is further ordered* that a copy of this Order to Show Cause shall be sent by first class mail, overnight mail, facsimile and e-mail, to Junrong Jiang, General Manager, Shenzhen Tangreat Technology Co., Ltd., 4th Floor, R&D Building, Dacheng Industry, Jihua Road, Bantian, Shenzhen, 518129, China, 86–755–82527821 (facsimile), tangreat@tangreat.com (e-mail).

26. *It is further ordered* that a copy of this Order to Show Cause, or a summary thereof, shall be published in the **Federal Register**.

Federal Communications Commission.

P. Michele Ellison,

Chief, Enforcement Bureau.

[FR Doc. 2011–5221 Filed 3–7–11; 8:45 am]

BILLING CODE 6712–01–P

[68] *Id.* sec. 2.945.

[69] *Id.* sec. 2.946.

[70] 47 U.S.C. 312(a), (c).

[71] 47 CFR 0.111, 0.311, 1.91(a), 2.939(b).

[72] 47 U.S.C. 302a(b), 333; 47 CFR 2.803, 2.907(b), 2.931, 2.932, 2.936, 2.946.

[73] 47 U.S.C. 312(c); 47 CFR 1.91(c), 2.939(b).

[74] 47 U.S.C. 312(c); 47 CFR 1.92(c), 2.939(b).

[75] *See* 47 CFR 0.111(b).

[76] *See* 47 U.S.C. 312(d); 47 CFR 1.91(d), 2.939(b).

FEDERAL RESERVE SYSTEM

Formations of, Acquisitions by, and Mergers of Bank Holding Companies

The companies listed in this notice have applied to the Board for approval, pursuant to the Bank Holding Company Act of 1956 (12 U.S.C. 1841 *et seq.*) (BHC Act), Regulation Y (12 CFR part 225), and all other applicable statutes and regulations to become a bank holding company and/or to acquire the assets or the ownership of, control of, or the power to vote shares of a bank or bank holding company and all of the banks and nonbanking companies owned by the bank holding company, including the companies listed below.

The applications listed below, as well as other related filings required by the Board, are available for immediate inspection at the Federal Reserve Bank indicated. The application also will be available for inspection at the offices of the Board of Governors. Interested persons may express their views in writing on the standards enumerated in the BHC Act (12 U.S.C. 1842(c)). If the proposal also involves the acquisition of a nonbanking company, the review also includes whether the acquisition of the nonbanking company complies with the standards in section 4 of the BHC Act (12 U.S.C. 1843). Unless otherwise noted, nonbanking activities will be conducted throughout the United States.

Unless otherwise noted, comments regarding each of these applications must be received at the Reserve Bank indicated or the offices of the Board of Governors not later than April 1, 2011.

A. Federal Reserve Bank of Dallas (E. Ann Worthy, Vice President) 2200 North Pearl Street, Dallas, Texas 75201–2272:

1. *Comerica, Inc.,* Dallas, Texas; to acquire 100 percent of the voting shares of Sterling Bancshares, Inc., Houston, Texas.

Board of Governors of the Federal Reserve System, March 3, 2011.

Robert deV. Frierson,

Deputy Secretary of the Board.

[FR Doc. 2011–5166 Filed 3–7–11; 8:45 am]

BILLING CODE 6210–01–P

DEPARTMENT OF HEALTH AND HUMAN SERVICES

Centers for Disease Control and Prevention

[60Day–11–0106]

Proposed Data Collections Submitted for Public Comment and Recommendations

In compliance with the requirement of Section 3506(c)(2)(A) of the Paperwork Reduction Act of 1995 for opportunity for public comment on proposed data collection projects, the Centers for Disease Control and Prevention (CDC) will publish periodic summaries of proposed projects. To request more information on the proposed projects or to obtain a copy of the data collection plans and instruments, call 404–639–5960 or send comments to Carol Walker, Acting Reports Clearance Officer, 1600 Clifton Road, MS–D74, Atlanta, GA 30333 or send an e-mail to *omb@cdc.gov.*

Comments are invited on: (a) Whether the proposed collection of information is necessary for the proper performance of the functions of the agency, including whether the information shall have practical utility; (b) the accuracy of the agency's estimate of the burden of the proposed collection of information; (c) ways to enhance the quality, utility, and clarity of the information to be collected; and (d) ways to minimize the burden of the collection of information on respondents, including through the use of automated collection techniques or other forms of information technology. Written comments should be received within 60 days of this notice.

Proposed Project

Preventive Health and Health Services Block Grant—Extension—National Center for Chronic Disease Prevention and Health Promotion (NCCDPHP), Centers for Disease Control and Prevention (CDC).

Background and Brief Description

The PHHS Block Grant program was established to provide awardees with a source of flexible funding for health promotion and disease prevention programs. Currently, 61 awardees (50 States, the District of Columbia, two American Indian Tribes, and eight U.S. territories) receive block grants to address locally-defined public health needs in innovative ways. Block Grants allow awardees to prioritize the use of funds and to fill funding gaps in programs that deal with the leading causes of death and disability. Block Grant funding also provides awardees with the ability to respond rapidly to emerging health issues, including outbreaks of diseases or pathogens. The PHHS Block Grant program is authorized by sections 1901–1907 of the Public Health Service Act.

As specified in the authorizing legislation, CDC currently collects information from Block Grant awardees to monitor their objectives and activities (Preventive Health and Health Services Block Grant, OMB No. 0920–0106, exp. 8/31/2011). Each awardee is required to submit an annual application for funding (Work Plan) that describes its objectives and the populations to be addressed, and an Annual Report that describes activities and progress. Information is submitted electronically through the Web-based Block Grant Information Management System (BGMIS). The BGMIS is designed to support Block Grant requirements specified in the program's authorizing legislation, such as adherence to the Healthy People (HP) framework. The current version of the BGMIS associates each awardee-defined activity with a specific HP National Objective, and identifies the location where funds are applied. Information items are broken down into discrete fields. Each objective is defined in SMART format (Specific, Measurable, Achievable, Realistic and Time-based), and includes a specified start date and end date.

CDC requests OMB approval to continue the information collection, without changes, for two years (through 8/31/2013). During this time, the CDC Block Grant program office will complete an internal planning process and replace the current Healthy People 2010 objectives with Healthy People 2020 objectives. CDC plans to submit a Revision request when decisions about the new awardee performance measures and updated BGMIS data elements are finalized.

During the period of this two-year Extension request, CDC will continue to use the BGMIS, without changes, to monitor awardee progress, identify activities and personnel supported with Block Grant funding, conduct compliance reviews of Block Grant awardees, and promote the use of evidence-based guidelines and interventions. There will be no changes to the number of respondents or the BGMIS data elements. However, since awardees can prepare upcoming submissions by modifying information already entered into the system, the estimated annual burden per respondent will decrease from 55 hours to 35 hours (a reduction of 5 hours per response for the Work Plan, and 15 hours per

response for the Annual Report). The total estimated annualized reduction in burden is 1,200 hours. There are no costs to respondents other than their time.

ESTIMATED ANNUALIZED BURDEN HOURS

Respondents	Form name	Number of respondents	Number of responses per respondent	Average burden per response (in hrs.)	Total burden (in hours)
Block Grant Awardees	Work Plan	61	1	20	1,220
	Annual Report	61	1	15	915
Total				122	2,135

Carol Walker,

Acting Reports Clearance Officer, Centers for Disease Control and Prevention.

[FR Doc. 2011–5170 Filed 3–7–11; 8:45 am]

BILLING CODE 4163–18–P

DEPARTMENT OF HEALTH AND HUMAN SERVICES

Centers for Disease Control and Prevention

[Docket Number NIOSH–227]

Request for Information on Conditions Relating to Cancer to Consider for the World Trade Center Health Program

AGENCY: National Institute for Occupational Safety and Health (NIOSH) of the Centers for Disease Control and Prevention (CDC), Department of Health and Human Services (HHS).

ACTION: Notice and request for public comments.

SUMMARY: The Director of the National Institute for Occupational Safety and Health (NIOSH) of the Centers for Disease Control and Prevention (CDC) serves as the World Trade Center (WTC) Program Administrator for certain functions related to the WTC Health Program established by the James Zadroga 9/11 Health and Compensation Act (Pub. L. 111–347). In accordance with Section 3312(a)(5)(A) of that Act, the WTC Program Administrator is conducting a review of all available scientific and medical evidence to determine if, based on the scientific evidence, cancer or a certain type of cancer should be added to the applicable list of health conditions covered by the World Trade Center Health Program.

The WTC Program Administrator is requesting information on the following: (1) Relevant reports, publications, and case information of scientific and medical findings where exposure to airborne toxins, any other hazard, or any other adverse condition resulting from the September 11, 2001 terrorist attacks, is substantially likely to be a significant factor in aggravating, contributing to, or causing cancer or a type of cancer; (2) clinical findings from the Clinical Centers of Excellence providing monitoring and treatment services to WTC responders (*i.e.,* those persons who performed rescue, recovery, clean-up and remediation work on the WTC disaster sites) and community members directly exposed to the dust cloud on 9/11/01; and (3) input on the scientific criteria to be used by experts to evaluate the weight of the medical and scientific evidence regarding such potential health conditions.

DATES: Comments must be received by March 31, 2011.

ADDRESSES: You may submit comments, identified by docket number NIOSH–227, by any of the following methods:

- *Mail:* NIOSH Docket Office, Robert A. Taft Laboratories, MS–C34, 4676 Columbia Parkway, Cincinnati, OH 45226.
- *Facsimile:* (513) 533–8285.
- *E-mail: nioshdocket@cdc.gov.*

All information received in response to this notice will be available for public examination and copying at the NIOSH Docket Office, 4676 Columbia Parkway, Cincinnati, Ohio 45226. The comment period for NIOSH–227 will close on March 31, 2011. All comments received will be available on the NIOSH Docket Web page at *http://www.cdc.gov/niosh/docket* by April 30, and comments will be available in writing by request. NIOSH includes all comments received without change in the docket and the electronic docket, including any personal information provided.

FOR FURTHER INFORMATION CONTACT: Dori Reissman, M.D., NIOSH, Patriots Plaza Suite 9200, 395 E St., SW., Washington, DC 20201, telephone (202) 245–0625 or e-mail *nioshdocket@cdc.gov.*

John Howard,

Director, National Institute for Occupational Safety and Health, Centers for Disease Control and Prevention.

[FR Doc. 2011–5157 Filed 3–7–11; 8:45 am]

BILLING CODE 4163–19–P

DEPARTMENT OF HEALTH AND HUMAN SERVICES

Centers for Medicare & Medicaid Services

[CMS–9978–N3]

Public Meeting of the Consumer Operated and Oriented Plan (CO–OP) Advisory Board; Meeting Location Change

AGENCY: Centers for Medicare & Medicaid Services (CMS), HHS.

ACTION: Notice of meeting location change.

SUMMARY: This notice announces the change of location of the March 14, 2011, public meeting of the Consumer Operated and Oriented Plan (CO–OP) Advisory Board that was published in the March 2, 2011 **Federal Register** (76 FR 1184 through 1185). In accordance with the Federal Advisory Committee Act, the meeting is open to the public.

DATES: March 14, 2011, from 8:30 a.m. to 5 p.m., Eastern Standard Time (EST).

ADDRESSES: *Meeting Location:* Fairmont Hotel, 2401 M Street, Washington, DC 20037.

FOR FURTHER INFORMATION CONTACT: Anne Bollinger, (301) 492–4395. Press inquiries are handled through CCIIO's Press Office at (202) 690–6343.

SUPPLEMENTARY INFORMATION: On March 2, 2011, we published a notice in the **Federal Register** (76 FR 1184) that announced a March 14, 2011, public meeting for interested parties to assist and advise the Secretary and the Congress on the strategy of the

Department of Health and Human Services (the Department) to foster the creation of consumer-operated and oriented qualified nonprofit health insurance issuers. We note that the March 2, 2011 notice provides specific information on the purpose of the meeting and the agenda. Such information remains the same and has not changed with the exception of the meeting location. We refer readers to the previously published notice for such information.

For reasons explained in more detail below, the public meeting of the Consumer Operated and Oriented Plan (CO–OP) Advisory Board, which was to be held at the Madison Hotel, 1177 15th Street, NW, Washington, DC 20005, as announced in the March 2, 2011 **Federal Register** (76 FR 1184 through 1185), is being relocated. We refer readers to the **ADDRESSES** section of this notice for the new location of the March 14, 2011 public meeting.

Based upon the late discovery of the reasons why the previously announced location is inadequate, the Center for Consumer Information and Insurance Oversight (CCIIO) finds that exceptional circumstances exist to issue notice of a public meeting with less than 15 calendar days' notice of the change of location of the meeting (*see* 41 CFR 102–3.150(b)).

The CCIIO has recently learned that the original location of the meeting has proved unsuitable for the following reasons: (1) The space identified in the March 2, 2011 notice is unacceptably small to accommodate the expected public participation; and (2) the presence of protestors, for reasons unrelated to the meeting, anticipated at the entrances to the building will impede access to the meeting by the public, particularly for those with disabilities (41 CFR Sec. 102–3.140). The Department only learned of these impediments to the meeting after the publication of the meeting notice. Because members of the Advisory Board have booked travel arrangements as have members of the public, it is considered less disruptive, more economical, and more consistent with the purposes of public notice to change the location of the meeting to a nearby site rather than change the date of the meeting.

(Catalog of Federal Domestic Assistance Program No. 93.773, Medicare—Hospital Insurance; and Program No. 93.774, Medicare—Supplementary Medical Insurance Program)

Dated: March 3, 2011.

Donald M. Berwick,

Administrator, Centers for Medicare & Medicaid Services.

[FR Doc. 2011–5363 Filed 3–4–11; 4:15 pm]

BILLING CODE 4120–01–P

DEPARTMENT OF HEALTH AND HUMAN SERVICES

Administration for Children and Families

Submission for OMB Review; Comment Request

Title: ACF Program Instruction: Children's Justice Act.

OMB No.: 0980–0196.

Description: The Program Instruction, prepared in response to the enactment of the Children's Justice Act (CJA), Title II of Public Law 111–320, Child Abuse Prevention and Treatment Act Reauthorization of 2010, provides direction to the States and Territories to accomplish the purposes of assisting States in developing, establishing and operating programs designed to improve: (1) The assessment and investigation of suspected child abuse and neglect cases, including cases of suspected child sexual abuse and exploitation, in a manner that limits additional trauma to the child and the child's family; (2) the assessment and investigation of cases of suspected child abuse-related fatalities and suspected child neglect-related fatalities; (3) the investigation and prosecution of cases of child abuse and neglect, including child sexual abuse and exploitation; and (4) the assessment and investigation of cases involving children with disabilities or serious health-related problems who are suspected victims of child abuse or neglect. This Program Instruction contains information collection requirements that are found in Public Law 111–320 at Sections 107(b) and 107(d), and pursuant to receiving a grant award. The information being collected is required by statute to be submitted pursuant to receiving a grant award. The information submitted will be used by the agency to ensure compliance with the statute; to monitor, evaluate and measure grantee achievements in addressing the investigation and prosecution of child abuse and neglect; and to report to Congress.

Minor updates will be made to the Program Instruction (including date/deadline updates and a streamline of announcement).

No changes will be made to the reporting burden for the application or annual report.

CAPTA was reauthorized since the 60 day notice and citations have been updated accordingly.

Respondents: State governments.

ANNUAL BURDEN ESTIMATES

Instrument	Number of respondents	Number of responses per respondent	Average burden hours per response	Total burden hours
Application & Annual Report	52	1	60	3,120

Estimated Total Annual Burden Hours: 3,120.

Additional Information: Copies of the proposed collection may be obtained by writing to the Administration for Children and Families, Office of Administration, Office of Information Services, 370 L'Enfant Promenade, SW., Washington, DC 20447, Attn: ACF Reports Clearance Officer. All requests should be identified by the title of the information collection. E-mail address: *infocollection@acf.hhs.gov.*

OMB Comment: OMB is required to make a decision concerning the collection of information between 30 and 60 days after publication of this document in the **Federal Register**. Therefore, a comment is best assured of having its full effect if OMB receives it within 30 days of publication. Written comments and recommendations for the proposed information collection should be sent directly to the following:

Office of Management and Budget, Paperwork Reduction Project.

Fax: 202–395–7285.

E-mail: *OIRA_SUBMISSION@OMB.EOP.GOV.*

Attn: Desk Officer for the Administration for Children and Families.

Robert Sargis,

Reports Clearance Officer.

[FR Doc. 2011–5185 Filed 3–7–11; 8:45 am]

BILLING CODE 4184–01–P

DEPARTMENT OF HEALTH AND HUMAN SERVICES

Administration for Children and Families

Proposed Information Collection Activity; Comment Request

Proposed Projects

Title: Family Violence Prevention and Services: Grants to State; Native American Tribes and Alaskan Native Villages, and State Domestic Violence Coalitions.

OMB No.: 0970–0280.

Description: The Family Violence Prevention and Services Act (FVPSA), 42 U.S.C. 10401 *et seq.,* authorizes the Department of Health and Human Services to award grants to States, Tribes—and Tribal Organizations, and State Domestic Violence Coalitions for family violence prevention and intervention activities. The proposed information collection activities will be used to make grant award decisions and to monitor grant performance.

Respondents

ANNUAL BURDEN ESTIMATES

Instrument	Number of respondents	Number of responses per respondent	Average burden hours per response	Total burden hours
State Grant Application	53	1	10	530
Tribal Grant Application	200	1	5	1,000
State Domestic Violence Coalition Application	56	1	10	560
State FVPSA Grant Performance Progress Report	53	1	10	530
Tribal FVPSA Grant Performance Progress Report	200	1	10	2,000

Estimated Total Annual Burden Hours: 4,620

In compliance with the requirements of Section 3506(c)(2)(A) of the Paperwork Reduction Act of 1995, the Administration for Children and Families is soliciting public comment on the specific aspects of the information collection described above. Copies of the proposed collection of information can be obtained and comments may be forwarded by writing to the Administration for Children and Families, Office of Administration, Office of Information Services, 370 L'Enfant Promenade, SW., Washington, DC 20447, Attn: ACF Reports Clearance Officer. E-mail address: *infocollection@acf.hhs.gov.* All requests should be identified by the title of the information collection.

The Department specifically requests comments on: (a) Whether the proposed collection of information is necessary for the proper performance of the functions of the agency, including whether the information shall have practical utility; (b) the accuracy of the agency's estimate of the burden of the proposed collection of information; (c) the quality, utility, and clarity of the information to be collected; and (d) ways to minimize the burden of the collection of information on respondents, including through the use of automated collection techniques or other forms of information technology. Consideration will be given to comments and suggestions submitted within 60 days of this publication.

Robert Sargis,

Reports Clearance Officer.

[FR Doc. 2011–5181 Filed 3–7–11; 8:45 am]

BILLING CODE 4184–01–P

DEPARTMENT OF HEALTH AND HUMAN SERVICES

Food and Drug Administration

[Docket No. FDA–2008–D–0457]

Guidance for Industry and Food and Drug Administration Staff; Clinical Investigations of Devices Indicated for the Treatment of Urinary Incontinence; Availability

AGENCY: Food and Drug Administration, HHS.

ACTION: Notice.

SUMMARY: The Food and Drug Administration (FDA) is announcing the availability of the guidance entitled "Clinical Investigations of Devices Indicated for the Treatment of Urinary Incontinence." This guidance document describes FDA's recommendations for clinical investigations of medical devices indicated for the treatment of urinary incontinence.

DATES: Submit either electronic or written comments on this guidance at any time. General comments on Agency guidance documents are welcome at any time.

ADDRESSES: Submit written requests for single copies of the guidance document entitled "Clinical Investigations of Devices Indicated for the Treatment of Urinary Incontinence " to the Division of Small Manufacturers, International, and Consumer Assistance, Center for Devices and Radiological Health, Food and Drug Administration, 10903 New Hampshire Ave., Bldg. 66, rm. 4613, Silver Spring, MD 20993–0002. Send one self-addressed adhesive label to assist that office in processing your request, or fax your request to 301–847–8149. *See* the **SUPPLEMENTARY INFORMATION** section for information on electronic access to the guidance.

Submit electronic comments on the guidance to *http://www.regulations.gov.* Submit written comments to the Division of Dockets Management (HFA–305), Food and Drug Administration, 5630 Fishers Lane, rm. 1061, Rockville, MD 20852. Identify comments with the docket number found in brackets in the heading of this document.

FOR FURTHER INFORMATION CONTACT: John Baxley, Center for Devices and Radiological Health, Food and Drug Administration, 10903 New Hampshire Ave., Bldg. 66, rm. G210, Silver Spring, MD 20993–0002, 301–796–6549.

SUPPLEMENTARY INFORMATION:

I. Background

Urinary incontinence is defined as the involuntary loss of urine. This guidance is intended to assist device manufacturers who plan to conduct clinical investigations of devices intended to treat urinary incontinence in support of premarket approval (PMA) applications or premarket notification (510(k)) submissions. The guidance describes FDA's recommendations for human clinical trials that involve the use of any type of urinary incontinence

device, including, but not limited to, implanted electrical urinary continence devices; implanted mechanical/hydraulic urinary continence devices; urological clamp for males; nonimplanted, peripheral and other electrical continence devices; protective garment for incontinence; surgical mesh; electrosurgical cutting and coagulation device and accessories; perineometer; gynecologic laparoscope and accessories; and vaginal pessary.

In the **Federal Register** of September 19, 2008 (73 FR 54406), FDA announced the availability of the draft guidance. Comments on the draft guidance were due by December 18, 2008. Two comments were received with each comment making multiple recommendations on changes to the content of the guidance document.

The comments included recommended changes to or removals of primary, secondary, and composite endpoints and changes to the recommended clinical study design. In response to these comments, FDA has clarified the appropriate context for recommended endpoints and a sponsor's options with respect to use of a given endpoint. FDA also revised the recommended requirements for use of voiding diaries and clarified the recommendation regarding the randomization of subjects.

Comments also involved recommendations on the categorization of adverse events. In response to these comments, FDA clarified the recommendation for categorization of adverse events as either device- or procedure-related.

II. Significance of Guidance

This guidance is being issued consistent with FDA's good guidance practices regulation (21 CFR 10.115). The guidance represents the Agency's current thinking on clinical investigations of devices intended to treat urinary incontinence. It does not create or confer any rights for or on any person and does not operate to bind FDA or the public. An alternative approach may be used if such approach satisfies the requirements of the applicable statute and regulations.

III. Electronic Access

Persons interested in obtaining a copy of the guidance may do so by using the Internet. A search capability for all CDRH guidance documents is available at *http://www.fda.gov/MedicalDevices/DeviceRegulationandGuidance/GuidanceDocuments/default.htm.* Guidance documents are also available at *http://www.regulations.gov.* To receive "Clinical Investigations of Devices Indicated for the Treatment of Urinary Incontinence," you may either send an e-mail request to *dsmica@fda.hhs.gov* to receive an electronic copy of the document or send a fax request to 301–847–8149 to receive a hard copy. Please use the document number 1636 to identify the guidance you are requesting.

IV. Paperwork Reduction Act of 1995

This guidance refers to previously approved collections of information found in FDA regulations. These collections of information are subject to review by the Office of Management and Budget (OMB) under the Paperwork Reduction Act of 1995 (44 U.S.C. 3501–3520). The collections of information in 21 CFR part 812 have been approved under OMB control number 0910–0078; the collections of information in 21 CFR part 807, subpart E, have been approved under OMB control number 0910–0120; the collections of information in 21 CFR part 814 have been approved under OMB control number 0910–0231; and the collections of information in 21 CFR parts 50.23 and 56.115 have been approved under OMB control number 0910–0130.

V. Comments

Interested persons may submit to the Division of Dockets Management (*see* **ADDRESSES**), either electronic or written comments regarding this document. It is only necessary to send one set of comments. It is no longer necessary to send two copies of mailed comments. Identify comments with the docket number found in brackets in the heading of this document. Received comments may be seen in the Division of Dockets Management between 9 a.m. and 4 p.m., Monday through Friday.

Dated: March 2, 2011.

Leslie Kux,

Acting Assistant Commissioner for Policy.

[FR Doc. 2011–5148 Filed 3–7–11; 8:45 am]

BILLING CODE 4160–01–P

DEPARTMENT OF HEALTH AND HUMAN SERVICES

Food and Drug Administration

[Docket No. FDA–2011–N–0097]

Medical Device Reporting; Malfunction Reporting Frequency

AGENCY: Food and Drug Administration, HHS.

ACTION: Notice.

SUMMARY: The Food and Drug Administration (FDA) is clarifying that device manufacturers and importers of all devices, including class I and those class II devices that are not permanently implantable, life supporting, or life sustaining, must continue to submit malfunction reports in full compliance with FDA's Medical Device Reporting regulation, pending future FDA notice under the Federal Food, Drug, and Cosmetic Act (the FD&C Act).

DATES: Submit either electronic or written comments by May 9, 2011.

ADDRESSES: Submit electronic comments on this document to *http://www.regulations.gov.* Submit written comments to the Division of Dockets Management (HFA–305), Food and Drug Administration, 5630 Fishers Lane, rm. 1061, Rockville, MD 20852. Identify comments with the docket number found in brackets in the heading of this document.

FOR FURTHER INFORMATION CONTACT: Victoria Schmid, Center for Devices and Radiological Health, Food and Drug Administration, 10903 New Hampshire Ave., Bldg. 66, rm. 3236, Silver Spring, MD 20993–0002, 301–796–6108.

I. Background

Title II, section 227 of the Food and Drug Administration Amendments Act of 2007 (FDAAA) (Public Law 110–85), amended section 519(a) of the FD&C Act (21 U.S.C. 360i(a)), relating to the reporting of malfunctions to FDA under part 803 (21 CFR part 803). The malfunction reporting requirements for class III devices and those class II devices that are permanently implantable, life supporting, or life sustaining were not altered by FDAAA. Under the amended section 519(a), device manufacturers and importers are to continue to submit malfunction reports in accordance with part 803 for all class III devices and for those class II devices that are permanently implantable, life supporting, or life sustaining, unless the Secretary of Health and Human Services (the Secretary) (and, by delegation, FDA) grants an exemption, variance from, or an alternative to, a requirement under such regulations under § 803.19 (section 519(a)(1)(B)(i) of the FD&C Act).

However, FDAAA changed malfunction reporting requirements for class I devices and those class II devices that are not permanently implantable, life supporting, or life sustaining. Under section 519(a) of the FD&C Act, as amended by FDAAA, the Secretary (and, by delegation, FDA) is required to publish a notice in the **Federal Register** or send a letter to the person who is the manufacturer or importer of a class I device or a class II device that is not permanently implantable, life

supporting, or life sustaining, if FDA finds that such a device should be subject to part 803 in order to protect the public health (section 519(a)(1)(B)(i)(III) of the FD&C Act). If such class I or class II devices are not the subject of an FDA notice or letter, the malfunction reports for these devices are to be submitted in accordance with the criteria established by the Secretary (and, by delegation, FDA), which criteria shall require the reports to be in summary form and made on a quarterly basis (section 519(a)(1)(B)(ii) of the FD&C Act).

Under section 519(a) of the FD&C Act, as amended by FDAAA, there is no change to the obligation for an importer to submit malfunction reports to the manufacturer in accordance with part 803 for devices that it imports into the United States (section 519(a)(1)(B)(iii) of the FD&C Act).

FDA intends to provide notice in the **Federal Register** that lists the types of devices that should be subject to part 803 in order to protect the public health, as required by section 519(a)(1)(B)(i)(III) of the FD&C Act). In addition, FDA intends to, by rulemaking, establish malfunction reporting criteria for devices subject to section 519(a)(1)(B)(ii) of the FD&C Act. In the interim, in the interest of public health, FDA is publishing this notice under section 519(a)(1)(B)(i)(III), to clarify that, to the extent there is any confusion as to current malfunction reporting requirements, all device manufacturers and importers of class I and those class II devices that are not permanently implantable, life supporting, or life sustaining, must continue to report in full compliance with part 803, pending further FDA notice under section 519(a)(1)(B)(i)(III), as to specific devices or device types subject to part 803, and the establishment of criteria in accordance with section 519(a)(1)(B)(ii). FDA considers it necessary to subject all such devices to part 803 in the interim, in order to protect the public health by ensuring that there is no gap in malfunction reporting for any device.

II. Comments

Interested persons may submit to the Division of Dockets Management (*see* **ADDRESSES**) either electronic or written comments regarding this document. It is only necessary to send one set of comments. It is no longer necessary to send two copies of mailed comments. Identify comments with the docket number found in brackets in the heading of this document. Received comments may be seen in the Division of Dockets Management between 9 a.m. and 4 p.m., Monday through Friday.

Dated: March 2, 2011.

Leslie Kux,

Acting Assistant Commissioner for Policy.

[FR Doc. 2011–5146 Filed 3–7–11; 8:45 am]

BILLING CODE 4160–01–P

DEPARTMENT OF HEALTH AND HUMAN SERVICES

National Institutes of Health

National Institute On Deafness and Other Communication Disorders; Notice of Closed Meetings

Pursuant to section 10(d) of the Federal Advisory Committee Act, as amended (5 U.S.C. App.), notice is hereby given of the following meetings.

The meetings will be closed to the public in accordance with the provisions set forth in sections 552b(c)(4) and 552b(c)(6), Title 5 U.S.C., as amended. The grant applications and the discussions could disclose confidential trade secrets or commercial property such as patentable material, and personal information concerning individuals associated with the grant applications, the disclosure of which would constitute a clearly unwarranted invasion of personal privacy.

Name of Committee: National Institute on Deafness and Other Communication Disorders Special Emphasis Panel; Clinical Trials—Communications.

Date: March 31, 2011.

Time: 12 p.m. to 2 p.m.

Agenda: To review and evaluate grant applications.

Place: National Institutes of Health, 6120 Executive Blvd., Rockville, MD 20852. (Telephone Conference Call.)

Contact Person: Christine A. Livingston, PhD, Scientific Review Officer, Division of Extramural Activities, National Institutes of Health/NIDCD, 6120 Executive Blvd.—MSC 7180, Bethesda, MD 20892, (301) 496–8683, *livingsc@mail.nih.gov*.

Name of Committee: National Institute on Deafness and Other Communication Disorders Special Emphasis Panel; P50 Grant Review.

Date: April 8, 2011.

Time: 11 a.m. to 1:30 p.m.

Agenda: To review and evaluate grant applications.

Place: National Institutes of Health, 6120 Executive Blvd., Rockville, MD 20852. (Telephone Conference Call.)

Contact Person: Christine A. Livingston, PhD, Scientific Review Officer, Division of Extramural Activities, National Institutes of Health/NIDCD, 6120 Executive Blvd.—MSC 7180, Bethesda, MD 20892, (301) 496–8683, *livingsc@mail.nih.gov*.

(Catalogue of Federal Domestic Assistance Program Nos. 93.173, Biological Research Related to Deafness and Communicative Disorders, National Institutes of Health, HHS)

Dated: March 2, 2011.

Jennifer S. Spaeth,

Director, Office of Federal Advisory Committee Policy.

[FR Doc. 2011–5228 Filed 3–7–11; 8:45 am]

BILLING CODE 4140–01–P

DEPARTMENT OF HEALTH AND HUMAN SERVICES

National Institutes of Health

National Center for Complementary & Alternative Medicine; Notice of Closed Meeting

Pursuant to section 10(d) of the Federal Advisory Committee Act, as amended (5 U.S.C. App.), notice is hereby given of the following meeting.

The meeting will be closed to the public in accordance with the provisions set forth in sections 552b(c)(4) and 552b(c)(6), Title 5 U.S.C., as amended. The grant applications and the discussions could disclose confidential trade secrets or commercial property such as patentable material, and personal information concerning individuals associated with the grant applications, the disclosure of which would constitute a clearly unwarranted invasion of personal privacy.

Name of Committee: National Center for Complementary and Alternative Medicine Special Emphasis Panel, NCCAM Education Panel.

Date: March 24–25, 2011.

Time: 12 p.m. to 5 p.m.

Agenda: To review and evaluate grant applications.

Place: Courtyard by Marriott, 5520 Wisconsin Avenue, Chevy Chase, MD 20815.

Contact Person: Peter Kozel, PhD., Scientific Review Officer, NCCAM, 6707 Democracy Boulevard, Suite 401, Bethesda, MD 20892–5475, 301–496–8004, *kozelp@mail.nih.gov*.

(Catalogue of Federal Domestic Assistance Program Nos. 93.213, Research and Training in Complementary and Alternative Medicine, National Institutes of Health, HHS)

Dated: March 2, 2011.

Jennifer S. Spaeth,

Director, Office of Federal Advisory Committee Policy.

[FR Doc. 2011–5226 Filed 3–7–11; 8:45 am]

BILLING CODE 4140–01–P

DEPARTMENT OF HEALTH AND HUMAN SERVICES

National Institutes of Health

National Heart, Lung, and Blood Institute; Notice of Closed Meetings

Pursuant to section 10(d) of the Federal Advisory Committee Act, as

amended (5 U.S.C. App.), notice is hereby given of the following meetings.

The meetings will be closed to the public in accordance with the provisions set forth in sections 552b(c)(4) and 552b(c)(6), Title 5 U.S.C., as amended. The grant applications and the discussions could disclose confidential trade secrets or commercial property such as patentable material, and personal information concerning individuals associated with the grant applications, the disclosure of which would constitute a clearly unwarranted invasion of personal privacy.

Name of Committee: National Heart, Lung, and Blood Institute Special Emphasis Panel; Inflammation and Cardiovascular Disease.
Date: March 24, 2011.
Time: 9 a.m. to 1:30 p.m.
Agenda: To review and evaluate grant applications.
Place: Hyatt Regency Bethesda, One Bethesda Metro Center, 7400 Wisconsin Avenue, Bethesda, MD 20814.
Contact Person: Giuseppe Pintucci, PhD, Scientific Review Officer, Review Branch/DERA, National Heart, Lung, and Blood Institute, 6701 Rockledge Drive, Room 7192, Bethesda, MD 20892, 301–435–0287, *Pintuccig@nhlbi.nih.gov.*

Name of Committee: National Heart, Lung, and Blood Institute Special Emphasis Panel; Hematopoietic Transplantation Data Coordinating Center (DCC).
Date: March 29, 2011.
Time: 8 a.m. to 12 p.m.
Agenda: To review and evaluate grant applications.
Place: Courtyard Crystal City, 2899 Jefferson Davis Highway, Arlington, VA 22204.
Contact Person: Keith A. Mintzer, PhD, Scientific Review Officer, Review Branch/DERA, National Heart, Lung, and Blood Institute, 6701 Rockledge Drive, Room 7186, Bethesda, MD 20892–7924, 301–435–0280, *mintzerk@nhlbi.nih.gov.*

Name of Committee: National Heart, Lung, and Blood Institute Special Emphasis Panel; NHLBI—Sickle Cell Disease.
Date: March 30, 2011.
Time: 1 p.m. to 3 p.m.
Agenda: To review and evaluate grant applications.
Place: National Institutes of Health, 6701 Rockledge Drive, Bethesda, MD 20892. (Telephone Conference Call.)
Contact Person: Giuseppe Pintucci, PhD, Scientific Review Officer, Review Branch/DERA, National Heart, Lung, and Blood Institute, 6701 Rockledge Drive, Room 7192, Bethesda, MD 20892, 301–435–0287, *Pintuccig@nhlbi.nih.gov.*

Name of Committee: National Heart, Lung, and Blood Institute Special Emphasis Panel; Severe Asthma Research Program.
Date: March 31, 2011.
Time: 8 a.m. to 5 p.m.
Agenda: To review and evaluate grant applications.
Place: Holiday Inn Georgetown, 2101 Wisconsin Avenue, NW., Washington, DC 20007.
Contact Person: Keith A. Mintzer, PhD, Scientific Review Officer, Review Branch/DERA, National Heart, Lung, and Blood Institute, 6701 Rockledge Drive, Room 7186, Bethesda, MD 20892–7924, 301–435–0280, *mintzerk@nhlbi.nih.gov.*

(Catalogue of Federal Domestic Assistance Program Nos. 93.233, National Center for Sleep Disorders Research; 93.837, Heart and Vascular Diseases Research; 93.838, Lung Diseases Research; 93.839, Blood Diseases and Resources Research, National Institutes of Health, HHS)

Dated: March 2, 2011.

Jennifer S. Spaeth,

Director, Office of Federal Advisory Committee Policy.

[FR Doc. 2011–5225 Filed 3–7–11; 8:45 am]

BILLING CODE 4140–01–P

DEPARTMENT OF HEALTH AND HUMAN SERVICES

National Institutes of Health

National Institute of Allergy and Infectious Diseases; Notice of Closed Meetings

Pursuant to section 10(d) of the Federal Advisory Committee Act, as amended (5 U.S.C. App.), notice is hereby given of the following meetings.

The meetings will be closed to the public in accordance with the provisions set forth in sections 552b(c)(4) and 552b(c)(6), Title 5 U.S.C., as amended. The grant applications and the discussions could disclose confidential trade secrets or commercial property such as patentable material, and personal information concerning individuals associated with the grant applications, the disclosure of which would constitute a clearly unwarranted invasion of personal privacy.

Name of Committee: National Institute of Allergy and Infectious Diseases Special Emphasis Panel; NIAID Special Emphasis Panel.
Date: March 31, 2011.
Time: 10 a.m. to 12:30 p.m.
Agenda: To review and evaluate grant applications.
Place: National Institutes of Health, 6700B Rockledge Drive, Bethesda, MD 20817. (Telephone Conference Call.)
Contact Person: Betty Poon, PhD, Scientific Review Officer, Scientific Review Program, Division of Extramural Activities, NIAID/NIH/DHHS, 6700B Rockledge Drive, MSC 7616, Bethesda, MD 20892–7616, 301–402–6891, *poonb@mail.nih.gov.*

Name of Committee: National Institute of Allergy and Infectious Diseases Special Emphasis Panel; Infectious Disease Conference Grants.
Date: April 18–22, 2011.
Time: 8 a.m. to 5 p.m.
Agenda: To review and evaluate grant applications.
Place: National Institutes of Health, 6700B Rockledge Drive, Bethesda, MD 20817. (Virtual Meeting.)
Contact Person: Dharmendar Rathore, PhD, Scientific Review Officer, Scientific Review Program, Division of Extramural Activities, National Institutes of Health/NIAID, 6700B Rockledge Drive, MSC 7616, Bethesda, MD 20892, 301–435–2766, *rathored@mail.nih.gov.*

(Catalogue of Federal Domestic Assistance Program Nos. 93.855, Allergy, Immunology, and Transplantation Research; 93.856, Microbiology and Infectious Diseases Research, National Institutes of Health, HHS)

Dated: March 2, 2011.

Jennifer S. Spaeth,

Director, Office of Federal Advisory Committee Policy.

[FR Doc. 2011–5229 Filed 3–7–11; 8:45 am]

BILLING CODE 4140–01–P

DEPARTMENT OF HOMELAND SECURITY

Office of the Secretary

[Docket No. DHS–2010–0055]

Privacy Act of 1974; Department of Homeland Security Office of Operations Coordination and Planning—002 National Operations Center Tracker and Senior Watch Officer Logs System of Records

AGENCY: Privacy Office, DHS.

ACTION: Notice of Privacy Act system of records.

SUMMARY: In accordance with the Privacy Act of 1974, the Department of Homeland Security proposes to establish a new Department of Homeland Security system of records notice titled, "Department of Homeland Security Office of Operations Coordination and Planning—002 National Operations Center Tracker and Senior Watch Officer Logs System of Records." This system of records consists of a National Operations Center and Senior Watch Officer Tracker Logs. The Senior Watch Officer Tracker Log is a synopsis, in the form of a word document, that records all significant information received and actions taken by the Senior Watch Officer during the shift. The National Operations Center Tracker Log is the underlying cumulative repository of responses to all-threats and all-hazards, man-made disasters and acts of terrorism, and natural disasters, and requests for information that require a National Operations Center tracking number. The National Operations Center tracker numbers are used in a wide variety of products originated by the Department or external sources. They are shared

inside and outside of the Department and serve as shorthand for tying data, used in internal and external reports, and agency actions to the event that caused them. The National Operations Center Tracker Log contains a copy of all documents and information that is requested, shared, and/or researched between all National Operations Center Watch Officer Desks. Because of the depth and breadth of information that the NOC receives, categories of individuals and records are broad so as to cover the possibility of this personally identifiable information entering this Privacy Act system of records within the NOC.

Some of the records in this system are in part transferred from the Department of Homeland Security/Information Analysis and Infrastructure Protection—001 Homeland Security Operations Center Database system of records, April 15, 2005, with the overall intent of narrowing the focus of these records to the specific purpose outlined in this system of records notice. It is the Department's intent, after all records are transferred into this and other system of records, to retire the Department of Homeland Security/Information Analysis and Infrastructure Protection—001 Homeland Security Operations Center Database system of records.

The Department of Homeland Security has issued a Notice of Proposed Rulemaking consistent with this system of records elsewhere in the **Federal Register**. This newly established system will be included in the Department of Homeland Security's inventory of record systems.

DATES: Submit comments on or before April 7, 2011. This new system will be effective April 7, 2011.

ADDRESSES: You may submit comments, identified by docket number DHS–2010–0055 by one of the following methods:

- *Federal e-Rulemaking Portal: http://www.regulations.gov.* Follow the instructions for submitting comments.
- *Fax:* 703–483–2999.
- *Mail:* Mary Ellen Callahan, Chief Privacy Officer, Privacy Office, Department of Homeland Security, Washington, DC 20528.
- *Instructions:* All submissions received must include the agency name and docket number for this rulemaking. All comments received will be posted without change to *http://www.regulations.gov,* including any personal information provided.
- *Docket:* For access to the docket to read background documents or comments received go to *http://www.regulations.gov.*

FOR FURTHER INFORMATION CONTACT: For general questions please contact: Michael Page (202–357–7626), Privacy Point of Contact, Office of Operations Coordination and Planning, Department of Homeland Security, Washington, DC 20528. For privacy issues please contact: Mary Ellen Callahan (703–235–0780), Chief Privacy Officer, Privacy Office, Department of Homeland Security, Washington, DC 20528.

SUPPLEMENTARY INFORMATION:

I. Background

In accordance with the Privacy Act of 1974, 5 U.S.C. 552a, the Department of Homeland Security (DHS) Office of Operations Coordination and Planning (OPS) proposes to establish a new DHS system of records titled, "DHS/OPS—002 National Operations Center Tracker and Senior Watch Officer Logs System of Records."

The primary role of the Senior Watch Officer (SWO) and the Watch Officer Desks, is to provide technical assistance directly in support of the DHS core missions to provide situational awareness and establish a common operating picture for Federal, State, local, Tribal, and territorial agencies and organizations; foreign governments and international organizations; domestic security and emergency management officials; and private sector entities or individuals as it relates to all-threats and all-hazards, man-made disasters and acts of terrorism, and natural disasters, and ensure that information reaches government decision-makers.

The SWO Tracker Log is a synopsis, in the form of a word document, that records all significant information received and actions taken during a shift. The NOC Tracker Log is the underlying cumulative repository of all NOC responses to threats, incidents, significant activities and Requests for Information (RFI) that require a NOC tracking number. The NOC Tracker Log contains a copy of all documents and information that is requested, shared, and/or researched between all NOC watch stander desks.

The purpose of this system is to tie together the high volume of information, requests and responses for information, and data collection relevant to discreet events and issues as they arise, and making that information easily accessible in an organized form should a future event benefit from previously gathered information. The tracker numbers are used in a wide variety of products originated by the DHS/OPS NOC. They are shared inside and outside of DHS and serve as shorthand for tying data, use in internal and external reports, and agency actions to the event that caused them. DHS is authorized to implement this program primarily through 5 U.S.C. 301, 552, 552a; 44 U.S.C. 3101; 6 U.S.C. 121; Sections 201 and 514 of the Homeland Security Act of 2002, as amended; Section 520 of the Post Katrina Emergency Management Reform Act; 44 U.S.C. 3101; Executive Order (E.O.) 12958; E.O. 9397; E.O. 12333; E.O. 13356; E.O. 13388; and Homeland Security Presidential Directive 5. This system has an effect on individual privacy that is balanced by the need to fuse information together and tracking homeland security information coming into and going out of OPS, including the NOC. Routine uses contained in this notice include sharing with the Department of Justice (DOJ) for legal advice and representation; to a congressional office at the request of an individual; to the National Archives and Records Administration (NARA) for records management; to contractors in support of their contract assignment to DHS; to appropriate Federal, State, Tribal, local, international, foreign agency, or other appropriate entity including the privacy sector in their role aiding OPS in their mission; to agencies, organizations or individuals for the purpose of audit; to agencies, entities, or persons during a security or information compromise or risk; to an agency, organization, or individual when there could potentially be a risk to an individual; and to the news media in the interest of the public. None of the information collected by this system is done so under the Paperwork Reduction Act (PRA).

Consistent with DHS's information sharing mission, information stored in the DHS/OPS—002 National Operations Center and Senior Watch Officer Tracker Log System of Records may be shared with other DHS components, as well as appropriate Federal, State, local, Tribal, and territorial agencies and organizations; foreign governments and international organizations; domestic security and emergency management officials; and private sector entities or individuals. This sharing will only take place after DHS determines that the receiving component or agency has a need to know the information to carry out national security, law enforcement, immigration, intelligence, or other functions consistent with the routine uses set forth in this system of records notice. DHS has issued a Notice of Proposed Rulemaking consistent with this system of records elsewhere in the **Federal Register**. This newly established system will be included in DHS's inventory of record systems.

II. Privacy Act

The Privacy Act embodies fair information principles in a statutory framework governing the means by which the United States Government collects, maintains, uses, and disseminates individuals' records. The Privacy Act applies to information that is maintained in a "system of records." A "system of records" is a group of any records under the control of an agency for which information is retrieved by the name of an individual or by some identifying number, symbol, or other identifying particular assigned to the individual. In the Privacy Act, an individual is defined to encompass United States citizens and lawful permanent residents. As a matter of policy, DHS extends administrative Privacy Act protections to all individuals where systems of records maintain information on U.S. citizens, lawful permanent residents, and visitors. Individuals may request access to their own records that are maintained in a system of records in the possession or under the control of DHS by complying with DHS Privacy Act regulations, 6 CFR Part 5.

The Privacy Act requires each agency to publish in the **Federal Register** a description denoting the type and character of each system of records that the agency maintains, and the routine uses that are contained in each system in order to make agency record keeping practices transparent, to notify individuals regarding the uses to which their records are put, and to assist individuals to more easily find such files within the agency. Below is the description of the DHS/OPS—002 National Operations Center and Senior Watch Officer Tracker Log System of Records.

In accordance with 5 U.S.C. 552a(r), DHS has provided a report of this system of records to the Office of Management and Budget and to Congress.

System of Records DHS/OPS—002

SYSTEM NAME:

DHS/OPS—002 National Operations Center Tracker and Senior Watch Officer Logs System of Records.

SECURITY CLASSIFICATION:

Unclassified, For Official Use Only, Law Enforcement Sensitive, and Classified.

SYSTEM LOCATION:

Records are maintained at the Department of Homeland Security (DHS) Office of Operations Coordination and Planning (OPS) National Operations Center (NOC) Headquarters in Washington, DC and field locations.

CATEGORIES OF INDIVIDUALS COVERED BY THE SYSTEM:

May include any individual whose interactions with OPS or the NOC are tracked by the NOC or the Senior Watch Officer. Those individuals may include: Federal, State, local, Tribal, and territorial officials; foreign government and international officials; domestic security and emergency management officials; private sector individuals; and members of the general public or international community.

CATEGORIES OF RECORDS IN THE SYSTEM:

- Full name;
- Date and place of birth;
- Social Security number (many State, local, Tribal, territorial, domestic security, emergency management, and private sector individuals, organizations and agencies collect/use SSN's as an identifier and may be shared with the Department);
- Citizenship;
- Contact information including phone numbers, e-mail addresses, and address;
- Physical description including height, weight, eye and hair color;
- Distinguishing marks including scars, marks, and tattoos;
- Automobile registration information;
- Watch list information;
- Medical records;
- Financial information;
- Results of intelligence analysis and reporting;
- Ongoing law enforcement investigative information;
- Historical law enforcement information;
- Information systems security analysis and reporting;
- Public source data including commercial databases, media, newspapers, and broadcast transcripts;
- Intelligence information including links to terrorism, law enforcement and any criminal and/or incident activity, and the date information is submitted;
- Intelligence and law enforcement information obtained from Federal, State, local, Tribal, and territorial agencies and organizations, foreign governments and international organizations; law enforcement, domestic security and emergency management officials; and private sector entities or individuals;
- Information provided by individuals, regardless of the medium, used to submit the information;
- Information obtained from the Federal Bureau of Investigation's (FBI) Terrorist Screening Center (TSC), or on terrorist watchlists, about individuals known or reasonably suspected to be engaged in conduct constituting, preparing for, aiding, or relating to terrorism;
- Data about the providers of information, including the means of transmission of the data; (*e.g.* where it is determined that maintaining the identity of the source of investigative lead information may be necessary to provide an indicator of the reliability and validity of the data provided and to support follow-on investigative purposes relevant and necessary to a legitimate law enforcement or homeland security matter, such data may likely warrant retention. Absent such a need, no information on the provider of the information would be maintained);
- National disaster threat and activity information;
- The date and time national disaster information is submitted, and the name of the contributing/submitting individual or agency;
- Limited data concerning the providers of information, including the means of transmission of the data may also be retained where necessary. Such information on other than criminal suspects or subjects is accepted and maintained only to the extent that the information provides descriptive matters relevant to a criminal subject or organization and has been deemed factually accurate and relevant to ongoing homeland security situational awareness and monitoring efforts;
- Name of the contributing or submitting agency, organization, or individual.

AUTHORITY FOR MAINTENANCE OF THE SYSTEM:

5 U.S.C. 301, 552, 552a; 44 U.S.C. 3101; 6 U.S.C. 121; Sections 201 and 514 of the Homeland Security Act of 2002, as amended; Section 520 of the Post Katrina Emergency Management Reform Act; 44 U.S.C. 3101; Executive Order (E.O.) 12958; E.O. 9397; E.O. 12333; E.O. 13356; E.O. 13388; and Homeland Security Presidential Directive 5.

PURPOSE(S):

The purpose of the system, including the NOC Tracker Log, the SWO Log, their corresponding tracker numbers, and the Incident Tracking Index is to tie together the high volume of information, requests and responses for information, and data collection relevant to discreet events and issues as they arise, and to make that information easily accessible in an organized form should a future event benefit from previously gathered information. The tracker numbers are

used in a wide variety of products originated by the DHS/OPS NOC.

ROUTINE USES OF RECORDS MAINTAINED IN THE SYSTEM, INCLUDING CATEGORIES OF USERS AND THE PURPOSES OF SUCH USES:

In addition to those disclosures generally permitted under 5 U.S.C. 552a(b) of the Privacy Act, all or a portion of the records or information contained in this system may be disclosed outside DHS as a routine use pursuant to 5 U.S.C. 552a(b)(3) as follows:

A. To the Department of Justice (including United States Attorney Offices) or other Federal agency conducting litigation or in proceedings before any court, adjudicative or administrative body, when it is necessary to the litigation and one of the following is a party to the litigation or has an interest in such litigation:

1. DHS or any component thereof;

2. any employee of DHS in his/her official capacity;

3. any employee of DHS in his/her individual capacity where DOJ or DHS has agreed to represent the employee; or

4. the United States or any agency thereof, is a party to the litigation or has an interest in such litigation, and DHS determines that the records are both relevant and necessary to the litigation and the use of such records is compatible with the purpose for which DHS collected the records.

B. To a congressional office from the record of an individual in response to an inquiry from that congressional office made at the request of the individual to whom the record pertains.

C. To the National Archives and Records Administration or other Federal government agencies pursuant to records management inspections being conducted under the authority of 44 U.S.C. 2904 and 2906.

D. To an agency, organization, or individual for the purpose of performing audit or oversight operations as authorized by law, but only such information as is necessary and relevant to such audit or oversight function.

E. To appropriate agencies, entities, and persons when:

1. DHS suspects or has confirmed that the security or confidentiality of information in the system of records has been compromised;

2. The Department has determined that as a result of the suspected or confirmed compromise there is a risk of harm to economic or property interests, identity theft or fraud, or harm to the security or integrity of this system or other systems or programs (whether maintained by DHS or another agency or entity) or harm to the individual that rely upon the compromised information; and

3. The disclosure made to such agencies, entities, and persons is reasonably necessary to assist in connection with DHS's efforts to respond to the suspected or confirmed compromise and prevent, minimize, or remedy such harm.

F. To contractors and their agents, grantees, experts, consultants, and others performing or working on a contract, service, grant, cooperative agreement, or other assignment for DHS, when necessary to accomplish an agency function related to this system of records. Individuals provided information under this routine use are subject to the same Privacy Act requirements and limitations on disclosure as are applicable to DHS officers and employees.

G. To an appropriate Federal, State, Tribal, local, international, or foreign law enforcement agency or other appropriate authority charged with investigating or prosecuting a violation or enforcing or implementing a law, rule, regulation, or order, where a record, either on its face or in conjunction with other information, indicates a violation or potential violation of law, which includes criminal, civil, or regulatory violations and such disclosure is proper and consistent with the official duties of the person making the disclosure.

H. To the news media and the public, with the approval of the Chief Privacy Officer in consultation with counsel, when there exists a legitimate public interest in the disclosure of the information or when disclosure is necessary to preserve confidence in the integrity of DHS or is necessary to demonstrate the accountability of DHS's officers, employees, or individuals covered by the system, except to the extent it is determined that release of the specific information in the context of a particular case would constitute an unwarranted invasion of personal privacy.

DISCLOSURE TO CONSUMER REPORTING AGENCIES:

None.

POLICIES AND PRACTICES FOR STORING, RETRIEVING, ACCESSING, RETAINING, AND DISPOSING OF RECORDS IN THE SYSTEM:

STORAGE:

Records in this system are stored electronically or on paper in secure facilities in a locked drawer behind a locked door. The records are stored on magnetic disc, tape, digital media, and CD–ROM.

RETRIEVABILITY:

Much of the data within this system does not pertain to an individual; rather, the information pertains to locations, geographic areas, facilities, and other things or objects not related to individuals. However, some personal information is captured. Personal data may be retrieved by NOC or SWO tracker numbers, name, social security number and other identifiers listed under the Categories of Records Section. Most information is stored as free text and any word, phrase, or number is searchable.

SAFEGUARDS:

Records in this system are safeguarded in accordance with applicable rules and policies, including all applicable DHS automated systems security and access policies. Strict controls have been imposed to minimize the risk of compromising the information that is stored. Access to the computer system containing the records in this system is limited to those individuals who have a need to know the information for the performance of their official duties and who have appropriate clearances or permissions.

RETENTION AND DISPOSAL:

In accordance with NARA approved records schedule N1–563–08–23, files are maintained through the end of the calendar year in which the data is no longer needed for current operational use and deleted or destroyed 20 years after.

SYSTEM MANAGER AND ADDRESS:

Director, Office of Operations Coordination and Planning, National Operations Center, Department of Homeland Security, Washington, DC 20528.

NOTIFICATION PROCEDURE:

The Secretary of Homeland Security is proposing to exempt this system from the notification, access, and amendment procedures of the Privacy Act because it is a law enforcement system. However, DHS/OPS will consider individual requests to determine whether or not information may be released. Individuals seeking notification of and access to any record contained in this system of records, or seeking to contest its content, may submit a request in writing to OPS FOIA Officer, whose contact information can be found at *http://www.dhs.gov/foia* under "contacts."

When seeking records about yourself from this system of records or any other Departmental system of records your request must conform with the Privacy

Act regulations set forth in 6 CFR Part 5. You must first verify your identity, meaning that you must provide your full name, current address and date and place of birth. You must sign your request, and your signature must either be notarized or submitted under 28 U.S.C. 1746, a law that permits statements to be made under penalty of perjury as a substitute for notarization. While no specific form is required, you may obtain forms for this purpose from the Chief Privacy Officer and Chief Freedom of Information Act Officer, *http://www.dhs.gov* or 1–866–431–0486. In addition you should provide the following:

- An explanation of why you believe the Department would have information on you;
- Identify which component(s) of the Department you believe may have the information about you;
- Specify when you believe the records would have been created;
- Provide any other information that will help the FOIA staff determine which DHS component agency may have responsive records; and
- If your request is seeking records pertaining to another living individual, you must include a statement from that individual certifying his/her agreement for you to access his/her records.

Without this bulleted information the component(s) may not be able to conduct an effective search, and your request may be denied due to lack of specificity or lack of compliance with applicable regulations.

RECORD ACCESS PROCEDURES:

See "Notification procedure" above.

CONTESTING RECORD PROCEDURES:

See "Notification procedure" above.

RECORD SOURCE CATEGORIES:

Information contained in this system is obtained from subject individuals, other Federal, State, local and Tribal agencies and organizations, domestic and foreign media, including periodicals, newspapers, and broadcast transcripts, public and classified data systems, reporting individuals, intelligence source documents, investigative reports, and correspondence.

EXEMPTIONS CLAIMED FOR THE SYSTEM:

The Secretary of Homeland Security has exempted this system from the following provisions of the Privacy Act, subject to the limitation set forth in 5 U.S.C. 552a(c)(3); (d); (e)(1), (e)(4)(G), (e)(4)(H), (e)(4)(I); and (f) pursuant to 5 U.S.C. 552a(k)(1), (k)(2), and (k)(3).

Dated: March 2, 2011.

Mary Ellen Callahan,

Chief Privacy Officer, Department of Homeland Security.

[FR Doc. 2011–5100 Filed 3–7–11; 8:45 am]

BILLING CODE 9110–9A–P

DEPARTMENT OF HOMELAND SECURITY

Federal Emergency Management Agency

[Docket ID: FEMA–2011–0008]

Agency Information Collection Activities: Proposed Collection; Comment Request, 1660–0044; Emergency Management Institute Follow-Up Evaluation Survey

AGENCY: Federal Emergency Management Agency, DHS.

ACTION: Notice; 60-day notice and request for comments; extension, without change, of a currently approved information collection; OMB No. 1660–0044; FEMA Form 519–0–1 (Presently FEMA Form 95–56), Post-Course Evaluation Questionnaire.

SUMMARY: The Federal Emergency Management Agency, as part of its continuing effort to reduce paperwork and respondent burden, invites the general public and other Federal agencies to take this opportunity to comment on a proposed extension, without change, of a currently approved information collection. In accordance with the Paperwork Reduction Act of 1995, this notice seeks comments concerning knowledge and skills gained through emergency management related courses.

DATES: Comments must be submitted on or before May 9, 2011.

ADDRESSES: To avoid duplicate submissions to the docket, please use only one of the following means to submit comments:

(1) *Online.* Submit comments at *http://www.regulations.gov* under Docket ID FEMA–2011–0008. Follow the instructions for submitting comments.

(2) *Mail.* Submit written comments to Docket Manager, Office of Chief Counsel, DHS/FEMA, 500 C Street, SW., Room 835, Washington, DC 20472–3100.

(3) *Facsimile.* Submit comments to (703) 483–2999.

(4) *E-mail.* Submit comments to *FEMA-POLICY@dhs.gov.* Include Docket ID FEMA–2011–0008 in the subject line.

All submissions received must include the agency name and Docket ID. Regardless of the method used for submitting comments or material, all submissions will be posted, without change, to the Federal eRulemaking Portal at *http://www.regulations.gov,* and will include any personal information you provide. Therefore, submitting this information makes it public. You may wish to read the Privacy Act notice that is available via the link in the footer of *http://www.regulations.gov.*

FOR FURTHER INFORMATION CONTACT: Dana Moat, Training Specialist, Emergency Management Institute, 301–447–1922 for additional information. You may contact the Records Management Division for copies of the proposed collection of information at facsimile number (202) 646–3347 or e-mail address: *FEMA–Information-Collections-Management@dhs.gov.*

SUPPLEMENTARY INFORMATION: State Assistance Programs for Training and Education in Comprehensive Emergency Management, 44 CFR part 360, implements the Emergency Management Training Program, which is designed to increase States' emergency management capabilities through training of personnel with responsibilities over preparedness, response, and recovery from all types of disasters. The Robert T. Stafford Disaster Relief and Emergency Assistance Act, 42 U.S.C. 5121 *et seq.,* authorizes training programs for emergency preparedness for State, local and Tribal government personnel to collect this data. In response to the Government Performance and Results Act (GPRA), the information obtained from the Emergency Management Institute "Follow-up Evaluation Survey," will be a follow-up tool used to evaluate the knowledge and/or skills participants obtained at EMI during training courses, and to improve Emergency Management Institute courses. The information is critical to determine if the Emergency Management Institute is meeting strategic goals and objectives established by the Federal Emergency Management Agency in order to fulfill its mission.

Collection of Information

Title: Emergency Management Institute Follow-up Evaluation Survey.

Type of Information Collection: Extension, without change, of a currently approved information collection.

OMB Number: OMB No. 1660–0044.

Form Titles and Numbers: FEMA Form 519–0–1 (Presently FEMA Form 95–56), Post-Course Evaluation Questionnaire.

Abstract: The Emergency Management Institute Follow-up Survey allows trainees at the Emergency Management Institute to self-assess the knowledge and skills gained through emergency management-related courses and the extent to which they have been beneficial and applicable in the conduct of their official positions. The information collected is used to review course content and offerings for program planning and management purposes.

Affected Public: Individuals or households, State, local or Tribal government.

Estimated Total Annual Burden Hours: 950 burden hours.

Estimated Cost: There are no annual start-up or capital costs.

Comments

Comments may be submitted as indicated in the **ADDRESSES** caption above. Comments are solicited to (a) evaluate whether the proposed data collection is necessary for the proper performance of the agency, including whether the information shall have practical utility; (b) evaluate the accuracy of the agency's estimate of the burden of the proposed collection of information, including the validity of the methodology and assumptions used; (c) enhance the quality, utility, and clarity of the information to be collected; and (d) minimize the burden of the collection of information on those who are to respond, including through the use of appropriate automated, electronic, mechanical, or other technological collection techniques or other forms of information technology, *e.g.,* permitting electronic submission of responses.

Dated: February 28, 2011.

Lesia M. Banks,

Director, Records Management Division, Mission Support Bureau, Federal Emergency Management Agency, Department of Homeland Security.

[FR Doc. 2011–5131 Filed 3–7–11; 8:45 am]

BILLING CODE 9111–27–P

DEPARTMENT OF HOMELAND SECURITY

U.S. Citizenship and Immigration Services

Agency Information Collection Activities: Form I–829, Extension of an Existing Information Collection Request; Comment Request

ACTION: 30-Day Notice of Information Collection Under Review: Form I–829, Petition by Entrepreneur to Remove Conditions. OMB Control No. 1615–0045.

The Department of Homeland Security, U.S. Citizenship and Immigration Services (USCIS) will be submitting the following information collection request to the Office of Management and Budget (OMB) for review and clearance in accordance with the Paperwork Reduction Act of 1995. The information collection was previously published in the **Federal Register** on November 30, 2010, at 75 FR 74070, allowing for a 60-day public comment period. USCIS received one comment for this information collection.

The purpose of this notice is to allow an additional 30 days for public comments. Comments are encouraged and will be accepted until April 7, 2011. This process is conducted in accordance with 5 CFR 1320.10.

Written comments and/or suggestions regarding the item(s) contained in this notice, especially regarding the estimated public burden and associated response time, should be directed to the Department of Homeland Security (DHS), and to the Office of Management and Budget (OMB) USCIS Desk Officer. Comments may be submitted to: USCIS, Chief, Regulatory Products Division, Office of the Executive Secretariat, 20 Massachusetts Avenue, NW., Washington, DC 20529–2020. Comments may also be submitted to DHS via facsimile to 202–272–0997 or via e-mail at rfs.regs@dhs.gov, and to the OMB USCIS Desk Officer via facsimile at 202–395–5806 or via e-mail at *oira_submission@omb.eop.gov.* When submitting comments by e-mail, please make sure to add OMB Control Number 1615–0045 in the subject box.

Note: The address listed in this notice should only be used to submit comments concerning the extension of this information collection. Please do not submit requests for individual case status inquiries to this address. If you are seeking information about the status of your individual case, please check "My Case Status" online at: *https://egov.uscis.gov/cris/Dashboard.do,* or call the USCIS National Customer Service Center at 1–800–375–5283 (TTY 1–800–767–1833).

Written comments and suggestions from the public and affected agencies should address one or more of the following four points:

(1) Evaluate whether the collection of information is necessary for the proper performance of the functions of the agency, including whether the information will have practical utility;

(2) Evaluate the accuracy of the agency's estimate of the burden of the collection of information, including the validity of the methodology and assumptions used;

(3) Enhance the quality, utility, and clarity of the information to be collected; and

(4) Minimize the burden of the collection of information on those who are to respond, including through the use of appropriate automated, electronic, mechanical, or other technological collection techniques, or other forms of information technology, e.g., permitting electronic submission of responses.

Overview of This Information Collection

(1) *Type of Information Collection:* Extension of an existing information collection.

(2) *Title of the Form/Collection:* Petition by Entrepreneur to Remove Conditions.

(3) *Agency form number, if any, and the applicable component of the Department of Homeland Security sponsoring the collection:* Form I–829. U.S. Citizenship and Immigration Services.

(4) *Affected public who will be asked or required to respond, as well as a brief abstract: Primary:* Individuals and households. This form is used by a conditional resident alien entrepreneur who obtained such status through a qualifying investment, to apply to remove conditions on his or her conditional residence, and on the conditional residence for his or her spouse and children.

(5) *An estimate of the total number of respondents and the amount of time estimated for an average respondent to respond:* 441 responses at 1 hours and 8 minutes (65 minutes) per response.

(6) *An estimate of the total public burden (in hours) associated with the collection:* 476 annual burden hours. If you need a copy of this information collection instrument, please visit the Web site at: *http://www.regulations.gov/.*

We may also be contacted at: USCIS, Regulatory Products Division, Office of the Executive Secretariat, 20 Massachusetts Avenue, NW., Washington, DC 20529–2020, Telephone number 202–272–8377.

Dated: March 2, 2011.

Stephen Tarragon,

Senior Analyst, Regulatory Products Division, Office of the Executive Secretariat, U.S. Citizenship and Immigration Services, Department of Homeland Security.

[FR Doc. 2011–5235 Filed 3–7–11; 8:45 am]

BILLING CODE 9111–97–P

DEPARTMENT OF HOMELAND SECURITY

U.S. Citizenship and Immigration Services

Agency Information Collection Activities: Form I–589, Extension of a Currently Approved Information Collection; Comment Request

ACTION: 30-Day Notice of Information Collection Under Review: Form I–589, Application for Asylum and for Witholding of Removal; OMB Control No. 1615–0067.

The Department of Homeland Security, U.S. Citizenship and Immigration Services (USCIS) will be submitting the following information collection request to the Office of Management and Budget (OMB) for review and clearance in accordance with the Paperwork Reduction Act of 1995. The information collection was previously published in the **Federal Register** on November 30, 2010, at 75 FR 74069, allowing for a 60-day public comment period. USCIS did not receive comments for this information collection.

The purpose of this notice is to allow an additional 30 days for public comments. Comments are encouraged and will be accepted until April 7, 2011. This process is conducted in accordance with 5 CFR 1320.10.

Written comments and/or suggestions regarding the item(s) contained in this notice, especially regarding the estimated public burden and associated response time, should be directed to the Department of Homeland Security (DHS), and to the Office of Management and Budget (OMB) USCIS Desk Officer. Comments may be submitted to: USCIS, Chief, Regulatory Products Division, Office of the Executive Secretariat, 20 Massachusetts Avenue, NW., Washington, DC 20529–2020. Comments may also be submitted to DHS via facsimile to 202–272–0997 or via e-mail at *rfs.regs@dhs.gov,* and to the OMB USCIS Desk Officer via facsimile at 202–395–5806 or via e-mail at *oira_submission@omb.eop.gov.* When submitting comments by e-mail, please make sure to add OMB Control Number 1615–0067 in the subject box.

Note: The address listed in this notice should only be used to submit comments concerning the extension of this information collection. Please do not submit requests for individual case status inquiries to this address. If you are seeking information about the status of your individual case, please check "My Case Status" online at: *https://egov.uscis.gov/cris/Dashboard.do,* or call the USCIS National Customer Service Center at 1–800–375–5283 (TTY 1–800–767–1833).

Written comments and suggestions from the public and affected agencies should address one or more of the following four points:

(1) Evaluate whether the proposed collection of information is necessary for the proper performance of the functions of the agency, including whether the information will have practical utility;

(2) Evaluate the accuracy of the agencies estimate of the burden of the proposed collection of information, including the validity of the methodology and assumptions used;

(3) Enhance the quality, utility, and clarity of the information to be collected; and

(4) Minimize the burden of the collection of information on those who are to respond, including through the use of appropriate automated, electronic, mechanical, or other technological collection techniques or other forms of information technology, e.g., permitting electronic submission of responses.

Overview of This Information Collection

(1) *Type of Information Collection:* Extension of a currently approved information collection.

(2) *Title of the Form/Collection:* Application for Asylum and for Witholding of Removal.

(3) *Agency form number, if any, and the applicable component of the Department of Homeland Security sponsoring the collection:* Form I–589. U.S. Citizenship and Immigration Services (USCIS).

(4) *Affected public who will be asked or required to respond, as well as a brief abstract: Primary: Individuals or Households.* Form I–589 is necessary to determine whether an alien applying for asylum and/or withholding of deportation in the United States is classified as a refugee, and is eligible to remain in the United States.

(5) *An estimate of the total number of respondents and the amount of time estimated for an average respondent to respond:* 63,138 responses at 12 hours per response.

(6) *An estimate of the total public burden (in hours) associated with the collection:* 757,656 annual burden hours.

If you need a copy of the information collection instrument, please visit the Web site at: *http://www.regulations.gov.*

We may also be contacted at: USCIS, Regulatory Products Division, Office of the Executive Secretariat, 20 Massachusetts Avenue, NW., Washington, DC 20529–2020, telephone number 202–272–8377.

Dated: March 2, 2011.

Stephen Tarragon,

Senior Analyst, Regulatory Products Division, Office of the Executive Secretariat, U.S. Citizenship and Immigration Services, Department of Homeland Security.

[FR Doc. 2011–5098 Filed 3–7–11; 8:45 am]

BILLING CODE 9111–97–P

DEPARTMENT OF THE INTERIOR

Fish and Wildlife Service

[FWS–R4–ES–2011–N031; 40120–1112–0000–F2]

Endangered and Threatened Wildlife and Plants; Receipt of Applications for Incidental Take Permits; Availability of Proposed Low-Effect Habitat Conservation Plan and Associated Documents; Indian River County, FL

AGENCY: Fish and Wildlife Service, Interior.

ACTION: Notice of availability; request for comment/information.

SUMMARY: We, the Fish and Wildlife Service (Service), announce the availability of incidental take permit (ITP) applications and a Habitat Conservation Plan (HCP). Johns Island Club, Incorporated, and the Church of God by Faith (applicants) request ITPs under the Endangered Species Act of 1973, as amended (Act). The applicants anticipate taking about 1.75 acres of Florida scrub-jay (*Aphelocoma coerulescens*) (scrub-jay) breeding, feeding, and sheltering habitat incidental to land preparation for the extension and paving of a road, the construction of a fellowship hall and storm water retention area, and the expansion and paving of a parking lot located in Indian River County, Florida (project). The permanent alteration of 1.75 acres is expected to result in the take of two families of scrub-jays. The applicants' HCP describes the minimization and mitigation measures proposed to address the effects of the project on the scrub-jay.

DATES: Written comments on the ITP applications and HCP should be sent to the South Florida Ecological Services Office (*see* **ADDRESSES**) and should be received on or before April 7, 2011.

ADDRESSES: You may request documents by e-mail, U.S. mail, or fax (*see* below). These documents are also available for public inspection by appointment during normal business hours at the office below. Send your comments or

requests by any one of the following methods.

E-mail: Trish_Adams@fws.gov. Use "Attn.: Permit numbers TE35005A–0 and TE35007A–0" as your message subject line.

Fax: Trish Adams, (772) 562–4288, Attn.: Permit numbers TE35005A–0 and TE35007A–0.

U.S. mail: Trish Adams, HCP Coordinator, South Florida Ecological Services Field Office, Attn: Permit numbers TE35005A–0 and TE35007A–0, U.S. Fish and Wildlife Service, 1339 20th Street, Vero Beach, FL 32960–3559.

In-person drop-off: You may drop off information during regular business hours at the above office address.

FOR FURTHER INFORMATION CONTACT: Ms. Trish Adams, HCP Coordinator, South Florida Ecological Services Office, Vero Beach, Florida (*see* **ADDRESSES**), telephone: 772–562–3909, extension 232.

SUPPLEMENTARY INFORMATION: If you wish to submit comments or information, you may do so by any one of several methods. Please reference permit numbers TE35005A–0 and TE35007A–0 in such comments. You may mail comments to the Service's South Florida Ecological Services Office (*see* **ADDRESSES**). You may also submit comments via e-mail to *trish_adams@fws.gov*. Please also include your name and return address in your e-mail message. If you do not receive a confirmation from us that we have received your e-mail message, contact us directly at the telephone number listed under **FOR FURTHER INFORMATION CONTACT**. Finally, you may hand deliver comments to the Service office listed under **ADDRESSES**.

Before including your address, phone number, e-mail address, or other personal identifying information in your comments, you should be aware that your entire comment—including your personal identifying information—may be made publicly available at any time. While you can ask us in your comment to withhold your personal identifying information from public review, we cannot guarantee that we will be able to do so.

Applicants' Proposed Project: We received applications from the applicants for incidental take permits, along with a proposed habitat conservation plan. The applicants both request 5-year permits under section 10(a)(1)(B) of the Act (87 Stat. 884; 16 U.S.C. 1531 *et seq.*). If we approve the permits, the applicants anticipate taking a total of approximately 1.75 acres (0.71 hectares (ha)) of scrub-jay breeding, feeding, and sheltering habitat incidental to land preparation for the extension and paving of a road, the construction of a fellowship hall and storm water retention area, and the expansion and paving of a parking lot and supporting infrastructure (project) in Indian River County, Florida.

Project construction would take place at latitude 27.7508, longitude −80.4451, Indian River County, Florida. The project includes Indian River County Parcels 31392800007000000001.0, 31392800007000000002.0, 31392800007000000003.0, and 31392800000500000023.0. These parcels are within scrub-jay–occupied habitat. The Service listed this species as threatened in 1987 (June 3, 1987; 52 FR 20715). The listing became effective July 6, 1987.

The applicants propose to mitigate the permanent alteration of occupied scrub-jay habitat by restoring, conserving, and managing a total of 3.81 acres (1.54 ha) of upland scrub in perpetuity. A separate endowment fund, in the amount of $4,572.00, will be established to ensure that the mitigation areas are properly managed in perpetuity.

Our Preliminary Determination: The Service has made a preliminary determination that the applicants' project, including the proposed minimization and mitigation measures, will individually and cumulatively have a minor or negligible effect on the species covered in the HCP. Therefore, issuance of the ITPs is a "low-effect" action and qualifies as a categorical exclusion under the National Environmental Policy Act (NEPA) (40 CFR 1506.6), as provided by the Department of the Interior Manual (516 DM 2 Appendix 1 and 516 DM 6 Appendix 1), and as defined in our Habitat Conservation Planning Handbook (November 1996). We base our determination that issuance of the ITPs qualifies as a low-effect action on the following three criteria: (1) Implementation of the project would result in minor or negligible effects on Federally listed, proposed, and candidate species and their habitats; (2) Implementation of the project would result in minor or negligible effects on other environmental values or resources; and (3) Impacts of the project, considered together with the impacts of other past, present, and reasonably foreseeable similarly situated projects, would not result, over time, in cumulative effects to environmental values or resources that would be considered significant. As more fully explained in our environmental action statement and associated Low Effect Screening Form, the applicants' proposed project qualifies as a "low-effect" project. This preliminary determination may be revised based on our review of public comments that we receive in response to this notice.

Next Steps: The Service will evaluate the HCP and comments submitted thereon to determine whether the applications meet the requirements of section 10(a) of the Act. The Service will also evaluate whether issuance of the section 10(a)(1)(B) ITPs complies with section 7 of the Act by conducting an intra-Service section 7 consultation. The results of this consultation, in combination with the above findings, will be used in the final analysis to determine whether or not to issue the ITPs. If it is determined that the requirements of the Act are met, the ITPs will be issued for the incidental take of the Florida scrub-jay.

Authority: This notice is provided pursuant to Section 10 of the Endangered Species Act and NEPA regulations (40 CFR 1506.6).

Dated: February 11, 2011.

Paul Souza,

Field Supervisor, South Florida Ecological Services Office.

[FR Doc. 2011–5160 Filed 3–7–11; 8:45 am]

BILLING CODE 4310–55–P

DEPARTMENT OF THE INTERIOR

Bureau of Land Management

[LLOR957000–L631000000–HD000: HAG11–0150]

Filing of Plats of Survey: Oregon/Washington

AGENCY: Bureau of Land Management, Interior.

ACTION: Notice.

SUMMARY: The plats of survey of the following described lands are scheduled to be officially filed in the Bureau of Land Management Oregon/Washington State Office, Portland, Oregon, 30 days from the date of this publication.

Willamette Meridian

Oregon

T. 23 S., R. 8 W., accepted January 25, 2011
T. 22 S., R. 7 W., accepted January 25, 2011
T. 35 S., R. 5 W., accepted January 27, 2011
T. 34 S., R. 2 W., accepted February 10, 2011
T. 30 S., R. 3 W., accepted February 10, 2011
T. 21 S., R. 8 W., accepted February 22, 2011

Washington

T. 29 N., R. 36 E., accepted January 21, 2011

ADDRESSES: A copy of the plats may be obtained from the Land Office at the Bureau of Land Management, Oregon/Washington State Office, 333 SW. 1st Avenue, Portland, Oregon 97204, upon

required payment. A person or party who wishes to protest against a survey must file a notice that they wish to protest (at the above address) with the Oregon/Washington State Director, Bureau of Land Management, Portland, Oregon.

FOR FURTHER INFORMATION CONTACT: Kyle Hensley, (503) 808–6124, Branch of Geographic Sciences, Bureau of Land Management, 333 SW. 1st Avenue, Portland, Oregon 97204.

Fred O'Ferrall,

Chief, Branch of Land, Mineral, and Energy Resources.

[FR Doc. 2011–5175 Filed 3–7–11; 8:45 am]

BILLING CODE 4310–33–P

DEPARTMENT OF THE INTERIOR

Bureau of Land Management

[LLIDB00200 LF20000ES.JS0000 LFESFTF60000]

Notice of Temporary Closures on Public Lands in Ada and Elmore Counties, ID

AGENCY: Bureau of Land Management, Interior.

ACTION: Notice of temporary closure.

SUMMARY: Notice is hereby given that the Big Fire (#FNW4) and Hot Tea Fire (#FTF6) closures to motorized vehicle use are in effect on public lands administered by the Four Rivers Field Office, Bureau of Land Management (BLM).

DATES: The closures will be in effect on the date this notice is published in the **Federal Register** and will remain in effect for 2 years or until rescinded or modified by the authorized officer or designated Federal officer.

FOR FURTHER INFORMATION CONTACT: Terry Humphrey, Four Rivers Field Manager, at 3948 Development Avenue, Boise, Idaho 83705, via e-mail at *terry_humphrey@blm.gov,* or phone (208) 384–3430. Persons who use a telecommunications device for the deaf (TDD) may call the Federal Information Relay Service (FIRS) at 1–800–877–8339 to contact the above individuals during normal business hours. The FIRS is available 24 hours a day, 7 days a week, to leave a message or question with the above individual. You will receive a reply during normal business hours.

SUPPLEMENTARY INFORMATION: The Big Fire closure affects public lands located in Ada County, Idaho approximately 3 miles northwest of Eagle, Idaho, which burned on July 28, 2010. The legal description of the affected public lands is:

Boise Meridian, Idaho

T. 5 N., R. 1 W.,
Secs. 22 through 27, inclusive.
T. 5 N., R. 1 E.,
Sec. 19;
Sec. 30.

The areas described contain approximately 1,920 acres.

The Big Fire closure is necessary because occupied and potential habitat for slickspot peppergrass, a species listed as threatened under the Endangered Species Act, is at risk from further damage by motorized vehicles. The closure area includes a designated management area for slickspot peppergrass (MA–2C). The closure will allow burned areas to re-establish a vegetative cover which protects the soil from erosion and provides for moisture retention. The closure will help to ensure the long-term viability of slickspot peppergrass plants and their associated habitat in this area.

The Hot Tea closure affects public lands in Elmore County, Idaho, burned August 27–29, 2010, by the Hot Tea Fire, 12 miles northwest of Mountain Home, Idaho. Unburned public lands in the Thorn Creek Pasture (#4) of the Hammett #6 Allotment and north of the powerline in the Lower Bennett Creek Allotment will also be closed. The legal description of the affected public lands is:

Boise Meridian, Idaho

T. 2 S., R. 8 E.,
Secs. 24 through 26, inclusive;
Secs. 34 through 35, inclusive.
T. 2 S., R. 9 E.,
Secs. 30 through 31, inclusive.
T. 3 S., R. 8 E.,
Sec. 2;
Secs. 12 through 13, inclusive;
Secs. 24 through 25, inclusive.
T. 3 S., R. 9 E.,
Secs. 5 through 8, inclusive;
Secs. 17 through 20, inclusive;
Secs. 28 through 30, inclusive.

The areas described contain approximately 6,900 acres.

The Hot Tea Fire closure is necessary to protect critical winter habitat for elk and mule deer as well as important sage-grouse habitat. The closure will help to slow the spread of noxious weeds; allow planted shrub, forb, and grass species to become established; and allow existing plants to recover from the effects of the fire. The closure will help ensure the long-term viability of habitat for wildlife populations in the area.

The BLM will post closure signs at main entry points to the closed areas and/or other locations on-site. This closure will also be posted in the BLM Boise District office. Maps of the affected area and other documents associated with this closure are available at 3948 Development Avenue, Boise, Idaho 83705. Under the authority of Section 303(a) of the Federal Land Policy and Management Act of 1976 (43 U.S.C. 1733(a)), 43 CFR 8360.0–7, and 43 CFR 8364.1, the BLM will enforce the following rule within the Big Fire and Hot Tea Fire closures:

Motorized Vehicles Must Not Be Used in the Closed Area

Exemptions: The following persons are exempt from this order: Federal, State, and local officers and employees in the performance of their official duties; members of organized rescue or fire-fighting forces in the performance of their official duties; and persons with written authorization from the BLM.

Penalties: Any person who violates the above rule may be tried before a United States Magistrate and fined no more than $1,000, imprisoned for no more than 12 months, or both. Violators may also be subject to the enhanced fines provided for in 18 U.S.C. 3571.

Authority: 43 CFR 8364.1.

Terry Humphrey,

Four Rivers Field Manager.

[FR Doc. 2011–5130 Filed 3–7–11; 8:45 am]

BILLING CODE 4310–GG–P

DEPARTMENT OF THE INTERIOR

National Park Service

[Account No. 3950–SZM]

President's Park—Environmental Assessment for Proposed Permanent Roadway Closures, Re-Design of Security Elements, and Preservation of Historic Landscape

AGENCY: National Park Service, Department of the Interior.

ACTION: Notice of Intent to Prepare an Environmental Assessment by the National Park Service and the United States Secret Service, and notice of scoping for re-designing the security elements and preserving the landscape within President's Park South, which includes a portion of E Street, NW., in Washington, DC.

SUMMARY: The proposed actions are as follows: The United States Secret Service deciding whether to permanently close (1) the section of E Street, NW. between 15th and 17th Streets, NW., South Executive Avenue, and the Ellipse roadways to unauthorized vehicular traffic, and (2) State Place and West South Executive Avenue and adjacent sidewalks (contiguous to First Division Monument) and Hamilton Place and

East South Executive Avenue and adjacent sidewalks (contiguous to Sherman Park) to unauthorized vehicular and unauthorized pedestrian traffic, and to install durable, more aesthetic security elements in the area to replace the temporary, unsightly security elements currently in place; and the National Park Service deciding on landscape and infrastructure changes to the area that respond to the street closures and re-design of security elements to ensure the iconic historic nature of the landscape that is the White House and its environs and an important destination for visitors.

DATES: Comments should be received within 45 days of this notice.

ADDRESSES: Comments may be submitted electronically through the NPS' Planning, Environment and Public Comment (PEPC) Web site at *http://parkplanning.nps.gov/PRPA* (The NPS preferred method of receiving comments), or by mail to: Office of the National Park Service Liaison to the White House, 1100 Ohio Drive, SW., Room 344, Washington, DC 20242.

FOR FURTHER INFORMATION CONTACT: The NPS may be contacted at the Office of the National Park Service Liaison to the White House, 1100 Ohio Drive, SW., Washington, DC 20242, (202) 619–6344. To be added to a mailing list about the proposed actions, contact the NPS at (202) 619–6344.

SUPPLEMENTARY INFORMATION: In accordance with the *National Environmental Policy Act,* 42 U.S.C. 4321, (NEPA), and applicable regulations and policies, the National Park Service (NPS) and the United States Secret Service (USSS), as joint lead agencies, are preparing an Environmental Assessment (EA). The EA will aid the USSS in deciding whether to permanently close E Street, South Executive Avenue, and the Ellipse roadways within President's Park South to unauthorized vehicular traffic, and State Place and West South Executive Avenue and adjacent sidewalks (contiguous to First Division Monument) and Hamilton Place and East South Executive Avenue and adjacent sidewalks (contiguous to Sherman Park) to unauthorized vehicular and unauthorized pedestrian traffic. The EA will further inform the USSS as it considers replacing existing security elements in the area, such as jersey barriers, provisional guard booths, canopy tents, bike rack, concrete planters and standing canine vehicles. These security elements, while effective, are visually unattractive and may detract from the iconic and historic nature of the area. The USSS would seek to install security elements that are both durable and more aesthetic at the vehicle checkpoints and along the street closures. The NPS will utilize the EA to assist in its consideration of landscape and infrastructure changes to President's Park South that respond to USSS security requirements and conform to the area's historic features, its iconic status and popularity as a visitor destination. The National Capital Planning Commission (NCPC) is a cooperating agency in this EA and is assisting in the development of potential alternatives by holding a limited competition for design concepts that integrate USSS security requirements and NPS cultural landscape preservation policies and guidelines.

Other government agencies are invited to serve as cooperating agencies. Interested agencies are asked to contact the Office of the National Park Service Liaison to the White House at (202) 619–6344 at the NPS as early as possible in this process. Compliance with the National Historic Preservation Act (NHPA), including NHPA Section 106, and other laws and requirements, will be coordinated with this EA process, and government agencies that are affected by the proposed actions or have special expertise will be consulted, whether or not they are cooperating agencies.

This notice also serves as an announcement of scoping on both proposed actions, and comments are sought from the public, government agencies and other interested persons and organizations. Scoping is used to gain insight into the issues to be addressed and to identify other significant issues related to the proposed actions. For comments to be most helpful to the scoping process, they must be received within 45 days of this notice.

During scoping, a public meeting will be held on Thursday, March 31, 2011, to present information and obtain input from attendees. The meeting will be held from 6:30 p.m. to 8:30 p.m. at the White House Visitor Center located at 1450 Pennsylvania Avenue South, NW., Washington, DC. At the meeting, the NPS and USSS will describe the proposed actions and how the planning will be conducted, and NCPC will describe the design concepts competition it is conducting. All comments submitted during scoping, including at the meeting, will be considered by both the NPS and USSS. If you require additional information or special assistance to attend and participate in this meeting, please contact the Office of the National Park Service Liaison to the White House at (202) 619–6344.

Before including your address, phone number, e-mail address, or other personal identifying information in your comment, be advised that your entire comment —including your personal identifying information —may be made publicly available at any time. While you can ask in your comment to withhold from public review your personal identifying information, we cannot guarantee that we will be able to do so.

There is always the possibility that the NPS and USSS might proceed to prepare an Environmental Impact Statement (EIS) for the proposed actions instead of an EA. If this occurs, comments submitted now will be considered for any EIS that is developed.

NEPA regulations and policies encourage agencies to collaborate or otherwise use the same NEPA analysis to avoid duplications of effort, to reduce paperwork, and to prevent delays in decision-making. The proposed actions grow out of needs identified by USSS concerning the level and type of security required for the White House. The NPS and USSS seek to re-design the security elements in this space and preserve the landscape to create a visitor and pedestrian-friendly, elegant and beautiful environment that is respectful of its historic context and iconic status, while continuing to meet USSS security needs. President's Park South is part of the National Park System unit and includes Sherman Park, First Division Monument, the Ellipse and its side panels, as well as the associated roadways in the area. These places, along with other site features, are listed on the National Register of Historic Places. The NPS manages President's Park South pursuant to its statutory authorities, regulations and policies, the *Comprehensive Design Plan for the White House and President's Park (2000) (Plan),* the *Design Guidelines for the White House and President's Park* (1997), and in light of the area's National Register status. The section of E Street, NW. within this park area is also administered by NPS.

Following the events of September 11, 2001, USSS temporarily closed the section of E Street, NW. within President's Park South to unauthorized vehicular traffic. To secure this general area, USSS placed a line of jersey barriers along the southern edge of E Street and installed provisional guard booths, canopy tents, bike rack, concrete planters and standing canine vehicles at vehicle checkpoints at the east and west ends of E Street. A vehicle check point

was also placed at the 16th Street and Constitution Avenue entrance to the Ellipse. Since that time there has been a continued, temporary closure of the roadways to unauthorized vehicular traffic. The USSS will determine whether to change the status of the closure from temporary to permanent and to integrate durable, more aesthetic security elements in place of the temporary security elements identified above.

The intent is to integrate durable, more aesthetic security elements that not only help satisfy the requirement to maintain the historic and iconic character of President's Park South, but also improve the experience of visitors moving through the area to enter or view the White House and its grounds.

The EA will assess a range of alternatives establishing a permanent closure of E Street and associated roadways and the installation of re-designed security elements resulting in changes to the area, along with a no-action alternative for continuing the current closure using the existing, temporary security elements. The *Plan* was developed as an EIS and it will serve as a foundation for this EA, and the EA will also review the *Plan's* treatment of President's Park South.

In 2008, the NCPC Security Task Force recommended, and the NPS and USSS agreed, that NCPC, through its Task Force, would manage a limited competition to generate creative and thoughtful design concepts that incorporate necessary USSS security elements while improving the experience of visitors moving through the area to enter or view the White House and its grounds. The NCPC is a Federal agency whose mission includes serving as the central planning agency for the Federal activities in the greater Washington, DC area. The design concepts generated through this process may become alternatives in the EA.

Dated: December 22, 2010.

Peggy O'Dell,

Regional Director, National Capital Region.

[FR Doc. 2011–5253 Filed 3–7–11; 8:45 am]

BILLING CODE 4312–54–P

DEPARTMENT OF THE INTERIOR

Bureau of Reclamation

Notice of Intent To Prepare an Environmental Impact Statement (EIS) and Hold Public Scoping Meetings for the Municipal and Industrial (M&I) Water Shortage Policy (WSP), Central Valley Project (CVP)

AGENCY: Bureau of Reclamation, Interior.

ACTION: Notice of intent and public scoping meetings.

SUMMARY: The U.S. Department of the Interior, Bureau of Reclamation Mid-Pacific Region (Reclamation) proposes to prepare an EIS to analyze the potential effects of an update to the M&I WSP. The policy would be implemented by Reclamation during water short years. Reclamation previously developed, in consultation with the CVP M&I Water Service contractors, a draft CVP M&I WSP in 2001, and in 2005 prepared an Environmental Assessment (2005 EA). The 2005 EA was published on October 2005 and a Finding of No Significant Impact (FONSI) was signed in December 2005. The 2001 M&I WSP was modified by, and is being implemented in accordance with, Alternative 1B in the 2005 EA.

Since the publication of the 2005 EA, Reclamation received additional comments from several CVP water service contractors. The contractors expressed a need for clarity on certain aspects of the 2001 M&I WSP, as modified. Other comments received by Reclamation suggested consideration of alternatives to the 2001 M&I WSP. The comments coupled with recent significant changes in the Bay-Delta and CVP/State Water Project operations, has impelled Reclamation to evaluate alternatives and provide an M&I WSP that best recognizes the needs of various segments of the water user community and how those needs could be addressed in times of water shortages.

DATES: Written comments on the scope of the EIS will be accepted until May 9, 2011.

Four public scoping meetings will be held to solicit public input on the scope of the environmental document, alternatives, concerns, and issues to be addressed in the EIS. The scoping meeting dates are:

- Monday, March 21, 2011, 2–4 p.m., Sacramento, CA.
- Tuesday, March 22, 2011, 6–8 p.m., Willows, CA.
- Wednesday, March 23, 2011, 6–8 p.m., Fresno, CA.
- Thursday, March 24, 2011, 6–8 p.m., Oakland, CA.

ADDRESSES: Send written comments on the scope of the M&I WSP EIS to Tamara LaFramboise, Natural Resource Specialist, Mid-Pacific Regional Office, Bureau of Reclamation, 2800 Cottage Way, MP–410, Sacramento, CA 95825; or e-mail *tlaframboise@usbr.gov.*

Scoping meetings will be held at:

- Sacramento— Best Western Expo Inn and Suites, 1413 Howe Avenue, Sacramento, CA 95825.
- Willows—Veteran's Memorial Hall Building of Willows, 525 W. Sycamore Street, Willows, CA 95988.
- Fresno—Piccadilly Inn Express, 5115 E. McKinley Avenue, Fresno, CA 93727.
- Oakland— Red Lion Hotel Oakland International Airport, 150 Hegenberger Road, Oakland, CA 94621.

FOR FURTHER INFORMATION CONTACT: Tim Rust, Program Manager, Bureau of Reclamation, via e-mail at *trust@usbr.gov* or at (916) 978–5516; or Mike Chotkowski, Chief, Division of Environmental Affairs, Bureau of Reclamation, via e-mail at *mchotowski@usbr.gov* or at (916) 978–5025.

SUPPLEMENTARY INFORMATION: The CVP is operated under Federal statutes authorizing the CVP, and by the terms and conditions of water rights acquired pursuant to California law. During any year, constraints may occur on the availability of CVP water for M&I water service contractors. The cause of the water shortage may be drought, unavoidable causes, or restricted operations resulting from legal and environmental obligations or mandates. Those legal and environmental obligations include, but are not limited to, the Endangered Species Act, the Central Valley Project Improvement Act (CVPIA), and conditions imposed on CVP's water rights by the California State Water Resources Control Board. The 2001 M&I WSP, as modified, establishes the terms and conditions regarding the constraints on availability of water supply for the CVP M&I water service contracts.

Allocation of CVP water supplies for any given water year is based upon forecasted reservoir inflows and Central Valley hydrologic conditions, amounts of storage in CVP reservoirs, regulatory requirements, and management of Section 3406(b)(2) resources and refuge water supplies in accordance with CVPIA. In some cases, M&I water shortage allocations may differ between CVP divisions due to regional CVP water supply availability, system capacity, or other operational constraints.

The purpose of the update to the 2001 M&I WSP, as modified, is to provide detailed, clear, and objective guidelines for the distribution of CVP water supplies during water shortage conditions, thereby allowing CVP water users to know when, and by how much, water deliveries may be reduced in drought and other low water supply conditions.

The increased level of predictability that will be provided by the update to the 2001 M&I WSP is needed by water managers and the entities that receive CVP water to better plan for and manage available CVP water supplies, and to better integrate the use of CVP water with other available Non-CVP water supplies. The update to the 2001 M&I WSP is also needed to clarify certain terms and conditions with regard to its applicability and implementation. The proposed action is the adoption of an updated 2001 M&I WSP, as modified, and its respective implementation guidelines.

The EIS will be used to develop and evaluate alternatives to the 2001 M&I WSP, as modified, and will include analysis of the adverse and beneficial effects on the quality of the human and physical environment.

Issues to be addressed may include, but are not limited to, CVP water supply availability, impacts on biological resources, historic and archaeological resources, hydrology, groundwater, water quality, air quality, safety, hazardous materials and waste, visual resources, socioeconomics, including real estate, agriculture and environmental justice.

At this time, there are no known or possible Indian trust assets or environmental justice issues associated with the Proposed Action.

Special Assistance for Public Scoping Meetings

If special assistance is required at the scoping meetings, please contact Mr. Louis Moore at (916) 978–5106, or via e-mail at *wmoore@usbr.gov.* Please notify Mr. Moore as far in advance as possible to enable Reclamation to secure the needed services. If a request cannot be honored, the requestor will be notified. A telephone device for the hearing impaired (TDD) is available at (916) 978–5608.

Public Disclosure

Before including your name, address, phone number, e-mail address, or other personal identifying information in your comment, you should be aware that your entire comment including your personal identifying information may be made publicly available at any time. While you can ask us in your comment to withhold your personal identifying information from public review, we cannot guarantee that we will be able to do so.

Dated: January 21, 2011.

Anastasia T. Leigh,

Acting Regional Environmental Officer, Mid-Pacific Region.

[FR Doc. 2011–5153 Filed 3–7–11; 8:45 am]

BILLING CODE 4310–MN–P

DEPARTMENT OF THE INTERIOR

Bureau of Reclamation

Central Valley Project Improvement Act, Water Management Plans

AGENCY: Bureau of Reclamation, Interior.

ACTION: Notice of availability.

SUMMARY: The following Water Management Plans are available for review:

- Truckee-Carson Irrigation District.
- Goleta Water District.
- Delano-Earlimart Irrigation District.
- Feather Irrigation District.

To meet the requirements of the Central Valley Project Improvement Act of 1992 (CVPIA) and the Reclamation Reform Act of 1982, the Bureau of Reclamation developed and published the Criteria for Evaluating Water Management Plans (Criteria). For the purpose of this announcement, Water Management Plans (Plans) are considered the same as Water Conservation Plans. The above entities have each developed a Plan, which Reclamation has evaluated and preliminarily determined to meet the requirements of these Criteria. Reclamation is publishing this notice in order to allow the public to review the plans and comment on the preliminary determinations. Public comment on Reclamation's preliminary (*i.e.,* draft) determination is invited at this time.

DATES: All public comments must be received by April 7, 2011.

ADDRESSES: Please mail comments to Ms. Christy Ritenour, Bureau of Reclamation, 2800 Cottage Way, MP–410, Sacramento, California 95825, or contact at 916–978–5281 (TDD 978–5608), or e-mail at *critenour@usbr.gov.*

FOR FURTHER INFORMATION CONTACT: To be placed on a mailing list for any subsequent information, please contact Ms. Christy Ritenour at the e-mail address or telephone number above.

SUPPLEMENTARY INFORMATION: We are inviting the public to comment on our preliminary (*i.e.,* draft) determination of Plan adequacy. Section 3405(e) of the CVPIA (Title 34 Pub. L. 102–575), requires the Secretary of the Interior to establish and administer an office on Central Valley Project water conservation best management practices that shall "* * * develop criteria for evaluating the adequacy of all water conservation plans developed by project contractors, including those plans required by section 210 of the Reclamation Reform Act of 1982." Also, according to Section 3405(e)(1), these criteria must be developed "* * * with the purpose of promoting the highest level of water use efficiency reasonably achievable by project contractors using best available cost-effective technology and best management practices." These criteria state that all parties (Contractors) that contract with Reclamation for water supplies (municipal and industrial contracts over 2,000 acre-feet and agricultural contracts over 2,000 irrigable acres) must prepare a Plan that contains the following information:

1. Description of the District.
2. Inventory of Water Resources.
3. Best Management Practices (BMPs) for Agricultural Contractors.
4. BMPs for Urban Contractors.
5. Plan Implementation.
6. Exemption Process.
7. Regional Criteria.
8. Five-Year Revisions.

Reclamation will evaluate Plans based on these criteria. A copy of these Plans will be available for review at Reclamation's Mid-Pacific Regional Office located in Sacramento, California, and the local area office. Our practice is to make comments, including names and home addresses of respondents, available for public review.

Public Disclosure

Before including your name, address, phone number, e-mail address, or other personal identifying information in your comment, you should be aware that your entire comment—including your personal identifying information—may be made publicly available at any time. While you can ask us in your comment to withhold your personal identifying information from public review, we cannot guarantee that we will be able to do so.

If you wish to review a copy of these Plans, please contact Ms. Christy Ritenour to find the office nearest you.

Dated: March 2, 2011.

Richard J. Woodley,

Regional Resources Manager, Mid-Pacific Region, Bureau of Reclamation.

[FR Doc. 2011–5163 Filed 3–7–11; 8:45 am]

BILLING CODE 4310–MN–P

DEPARTMENT OF JUSTICE

Notice of Lodging Proposed Consent Decree

In accordance with Departmental Policy, 28 CFR 50.7, notice is hereby given that a proposed Consent Decree in *United States* v. *John R. Cumbie,* Civil No. 2:08–CV–01825–RMG, was lodged with the United States District of South Carolina on March 1, 2011.

This proposed Consent Decree concerns a complaint filed by the United States against Defendant John R. Cumbie, pursuant to Sections 301 and 404 of the Clean Water Act, 33 U.S.C. 1311 and 1344, to obtain injunctive relief and impose civil penalties against Defendant for violating the Clean Water Act by discharging fill material into waters of the United States. The proposed Consent Decree resolves these allegations by requiring Defendant to restore the impacted areas and to perform mitigation and to pay a civil penalty. The proposed Consent Decree also provides for Defendant to perform a supplemental environmental project. The Department of Justice will accept written comments relating to this proposed Consent Decree for thirty (30) days from the date of publication of this Notice. Please address comments to Martin F. McDermott, United States Department of Justice, Environment & Natural Resources Division, Environmental Defense Section, P.O. Box 23986, Washington, DC 20026–3986, and refer to *United States* v. *John R. Cumbie,* Civil No. 2:08–CV–01825–RMG, DJ # 90–5–1–1–17164.

The proposed Consent Decree may be examined at the Clerk's Office, United States District Court for the District of South Carolina, Hollings Judicial Center, Meeting Street at Broad, Charleston, SC 29401.

In addition, the proposed Consent Decree may be viewed at *http://www.usdoj.gov/enrd/Consent_Decrees.html.*

Maureen M. Katz,

Assistant Section Chief, Environment & Natural Resources Division.

[FR Doc. 2011–5087 Filed 3–7–11; 8:45 am]

BILLING CODE P

DEPARTMENT OF LABOR

Office of the Secretary

Agency Information Collection Activities; Comment Request; Vendor Outreach Session Information Management System

ACTION: Notice.

SUMMARY: The Department of Labor (DOL) is soliciting comments concerning the information collections contained in the Vendor Outreach Session Information Management System.

DATES: Submit comments on or before May 9, 2011.

ADDRESSES: Contact Michel Smyth by telephone at 202–693–4129 (this is not a toll-free number) or via e-mail to *DOL_PRA_PUBLIC@dol.gov* to submit comments about or obtain a copy of this information collection request (ICR), with applicable supporting documentation; including a description of the likely respondents, proposed frequency of response, and estimated total burden.

SUPPLEMENTARY INFORMATION:

I. Background: Federal agencies are required to promote procurement opportunities for small, small disadvantaged, and 8(a) businesses by the Small Business Act, as amended, (Pub. L. 95–507, sections 8 and 15) and Public Law 100–656 (sections 502 and 503). The Federal Acquisition Streamlining Act of 1994 (Pub. L. 103–355) mandates similar efforts for small women-owned businesses. Public Law 106–50 created the program for service-disabled veteran-owned small businesses. Public Law 105–135 established the HubZone program. The Small Business Regulatory Enforcement Fairness Act of 1996 (Pub. L. 104–121) requires Federal agencies to make available to small businesses compliance guides and assistance on the implementation of regulations and directives of enforcement laws they administer. Further, Executive Order 13170 requires that Departments take a number of actions to increase outreach and maximize participation of small disadvantaged businesses in their procurements. Executive Order 13157 strengthens the executive branch's commitment to increased opportunities for women-owned small businesses. Accordingly, the Vendor Outreach Session Information Management System is needed to gather, document, and manage identifying information for DOL constituency groups such as small businesses and trade associations. Via this system, the constituent groups have the opportunity voluntarily to provide information about their organizations to the DOL. The information is used by DOL agencies to maximize communication with the respective constituency groups regarding relevant DOL programs, initiatives, and procurement opportunities; to track and solicit feedback on customer service to group members; and to facilitate registration of group members for certain DOL-sponsored activities.

As part of its continuing effort to reduce paperwork and respondent burden, the DOL conducts a pre-clearance consultation program to provide the general public and Federal agencies an opportunity to comment on proposed and/or continuing collections of information in accordance with the Paperwork Reduction Act of 1995 (PRA95) [44 U.S.C. 3506(c)(2)(A)]. This program helps to ensure that requested data can be provided in the desired format, reporting burden (time and financial resources) is minimized, collection instruments are clearly understood, and the impact of collection requirements on respondents can be properly assessed.

II. Comment Solicitation: The DOL is soliciting comments concerning the information collections contained in the Vendor Outreach Session Information Management System. Comments submitted in response to this notice will be summarized and/or included in the request for Office of Management and Budget approval of the information collection request; they also will become a matter of public record.

III. Review Focus: The DOL is particularly interested in comments which:

- Evaluate whether the proposed collection of information is necessary for the proper performance of the functions of the agency, including whether the information will have practical utility;
- Evaluate the accuracy of the agency's estimate of the burden of the proposed collection of information, including the validity of the methodology and assumptions used;
- Enhance the quality, utility and clarity of the information to be collected; and minimize the burden of the collection of information on those who are to respond, including through the use of appropriate automated, electronic, mechanical, or other technological collection techniques or other forms of information technology, e.g., permitting electronic submissions of responses.

IV Current Burden Summary: The estimated public burden associated with this collection of information is summarized below:

Type of Review: Revision of an existing information collection.

Agency: DOL—Office of the Assistant Secretary for Administration and Management.

Title: Vendor Outreach Session Information Management System.

OMB Control Number: 1290–0002.

Agency Form Number: None.

Affected Public: Private sector—businesses or other for-profits, not-for-profit institutions.

Estimated Total Annual Respondents: 500.

Estimated Total Annual Responses: 1000.

Frequency: On Occasion.

Estimated Average Time Per Response: 5–7 minutes.

Estimated Total Annual Burden Hours: 160 hours.

Total Burden Cost (capital/startup): $0.

Total Burden Cost (operating/maintenance): $0.

Signed: March 3, 2011.

Michel Smyth,

Departmental Clearance Officer.

[FR Doc. 2011–5241 Filed 3–7–11; 8:45 am]

BILLING CODE 4510–23–P

DEPARTMENT OF LABOR

Employment and Training Administration

Proposed Information Collection Request of the ETA–9016 (OMB Control No. 1205–0268) on Alien Claims Activity Report; Comment Request on Extension Without Change

AGENCY: Employment and Training Administration (ETA), Labor.

ACTION: Notice.

SUMMARY: The Department of Labor, as part of its continuing effort to reduce paperwork and respondent burden conducts a preclearance consultation program to provide the general public and Federal agencies with an opportunity to comment on proposed and/or continuing collections of information in accordance with the Paperwork Reduction Act of 1995 (PRA95) [44 U.S.C. 3506(c)(2)(A)]. This program helps to ensure that requested data can be provided in the desired format, reporting burden (time and financial resources) is minimized, collection instruments are clearly understood, and the impact of collection requirements on respondents can be properly assessed.

A copy of the proposed information collection request (ICR) can be obtained by contacting the office listed below in the addressee section of this notice or by accessing: *http://www.doleta.gov/OMBCN/OMBControlNumber.cfm.* This collection authority expires on July 31, 2011.

DATES: Written comments must be submitted to the office listed in the addressee's section below on or before May 9, 2011.

ADDRESSES: Send comments to Nancy Dean, U.S. Department of Labor, Employment and Training Administration, Office of Workforce Security, 200 Constitution Avenue, NW., Frances Perkins Bldg., Room S–4231, Washington, DC 20210, telephone number (202) 693–3215 (this is not a toll-free number) or by e-mail: *dean.nancy@dol.gov.*

SUPPLEMENTARY INFORMATION:

I. Background

The ETA–9016 Report is used by the Department of Labor to assess whether (and the extent to which) the requirements of the U.S. Citizenship and Immigration Services (USCIS), Systematic Alien Verification for Entitlement (SAVE) system are cost-effective and otherwise appropriate for the Unemployment Insurance (UI) program. In addition, data from the Alien Claims Activity report is being used to assist the Secretary of Labor in determining whether a State Workforce Agency's (SWA) administrative costs associated with the verification program are reasonable and reimbursable. There is no other report or system available for collecting this required information. The report allows the Department of Labor to determine the number of aliens filing for UI, the number of benefit issues detected, the denials of benefits to aliens, the extent to which State Agencies use the system, and the overall effectiveness and cost efficiency of the verification system. If SWAs are not required to submit the information on the Alien Claims Activity Report, the Department of Labor would not be able to fulfill its responsibilities to assess the SAVE system.

II. Desired Focus of Comments

Currently, ETA is soliciting comments concerning the proposed extension of the collection for the ETA 9016 Report on Alien Claims Activity, and is particularly interested in comments which:

* Enhance the quality, utility, and clarity of the information to be collected; and

* Minimize the burden of the collection of information on those who are to respond, including through the use of electronic collection techniques.

III. Current Actions

Continued collection of the ETA–9016 data will provide for a comprehensive evaluation of the UI Alien Claims Activities. The data are collected quarterly, and an analysis of the data received is formulated into a report summarizing the Alien Claims Activity by the 53 SWAs.

Type of Review: Extension without change.

Title: ETA 9016, Alien Claims Activity Report.

OMB Number: 1205–0268.

Affected Public: 53 State Workforce Agencies.

Form(s): ETA 9016.

Total Annual Respondents: 53.

Annual Frequency: Quarterly.

Total Annual Responses: 212 responses.

Average Time per Response: 1 hour.

Estimated Total Annual Burden Hours: 212 hours.

Total Annual Burden Cost for Respondents: $0.

Comments submitted in response to this comment request will be summarized and/or included in the request for Office of Management and Budget approval of the information collection request; they will also become a matter of public record.

Dated: March 1, 2011.

Jane Oates,

Assistant Secretary, Employment and Training Administration.

[FR Doc. 2011–5238 Filed 3–7–11; 8:45 am]

BILLING CODE 4510–FT–P

DEPARTMENT OF LABOR

Employment and Training Administration

Comment Request for Information Collection for the Evaluation of the Reintegration of Ex-Offenders—Adult Program (RExO), New Collection

AGENCY: Employment and Training Administration (ETA), Labor.

ACTION: Notice.

SUMMARY: The Department of Labor (Department), as part of its continuing effort to reduce paperwork and respondent burden, conducts a preclearance consultation program to provide the general public and Federal agencies with an opportunity to comment on proposed and/or continuing collections of information in accordance with the Paperwork Reduction Act of 1995 (PRA95) [44 U.S.C. 3506(c)(2)(A)]. This program helps to ensure that requested data can be provided in the desired format, reporting burden (time and financial resources) is minimized, collection instruments are clearly understood, and the impact of collection requirements on respondents can be properly assessed.

Currently, ETA is soliciting comments concerning the collection of data for the Evaluation of RExO. A copy of the proposed information collection request

can be obtained by contacting the office listed below in the addressee section of this notice.

DATES: Written comments must be submitted to the office listed in the addressee's section below on or before May 9, 2011.

ADDRESSES: Submit written comments to Bogdan Tereshchenko, Room N–5641, Employment and Training Administration, 200 Constitution Avenue NW., Washington, DC 20210. Telephone number: 202–693–3224 (this is not a toll-free number). Fax number: 202–693–2766. E-mail: *tereshchenko.bogdan@dol.gov.*

SUPPLEMENTARY INFORMATION:

I. Background

More than two million people are incarcerated in Federal and State prisons and local jails, and over 600,000 people return from prisons to communities across the country each year. Released ex-offenders face multiple challenges, including difficulties with finding a job and housing and accessing social and health services, possible child support arrears, and family troubles. A study conducted for the Bureau of Justice Statistics showed that two-thirds of individuals released from prison in 1994 were rearrested and half returned to prison within three years. Recent research suggests that released offenders consider finding employment a high priority and that higher employment and earnings are associated with lower recidivism.

Through RExO, the Department issued grants to urban faith-based and community organizations (FBCOs) to provide comprehensive employment-centered services to nonviolent offenders recently released from prison. Building on the strengths that FBCOs bring, RExO's programs include mentoring and various supportive services and facilitate connections with providers of housing services. Since many of the grantees serve areas with high concentrations of returning prisoners, one of RExO's aims is to exercise a positive influence on the communities' broader social fabric.

Under contract with ETA, Social Policy Research Associates is conducting a random assignment evaluation of 24 of RExO's first generation grants. Participants at each site are randomly assigned to either the program (60 percent) or the control (40 percent) group. The evaluation includes:

- *An implementation component.* This component involves documenting the processes, used by the grantee organizations to assign participants to either the program group, which was offered program services, or the control group, which was not; describing the characteristics of the program participants; examining the community contexts of the RExO grantee programs; and identifying the differences in the services provided to the program and control groups (the latter could access non-RExO services) as well as variations across grantees. By shedding light on the programmatic practices of RExO, this component will support the interpretation of impact findings. Information for it will come from site visits to the grantees and the program's management information system.
- *An impact component.* Comparing the two groups' employment-related and recidivism outcomes will allow the research team to estimate the impacts of RExO services for eligible ex-offenders overall and for key subgroups. Outcome data will be obtained from telephone surveys of members of the RExO program and control groups conducted at 12 and 36 months after random assignment.

The RExO evaluation will rely on the following information sources for the implementation and impact components:

- *Unstructured in-person interviews with program staff at each site.* The research team will conduct a visit to each of the 24 grantee sites. Interviews with grantee program staff, carried out during these visits, will yield detailed information on program operations, administrative issues, service delivery, and promising practices; and
- *12-month and 36-month participant surveys.* The survey questions will address employment and training services received from RExO and other sources; outcomes including employment, job characteristics (such as hourly wages, available fringe benefits, and occupations), earnings, and recidivism; as well as health status, receipt of public assistance, and housing. Responses to the survey will be the main data source for estimating the program impacts.

II. Review Focus

The Department is particularly interested in comments, which:

- Evaluate whether the proposed collection of information is necessary for the proper performance of the functions of the agency, including whether the information will have practical utility;
- Evaluate the accuracy of the agency's estimate of the burden of the proposed collection of information, including the validity of the methodology and assumptions used;
- Enhance the quality, utility, and clarity of the information to be collected; and
- Minimize the burden of the collection of information on those who are to respond, including through the use of appropriate automated, electronic, mechanical, or other technological collection techniques or other forms of information technology, *e.g.,* permitting electronic submissions of responses.

III. Current Actions

Type of Review: New collection.

Title: Evaluation of the Reintegration of Ex-Offenders—Adult Program.

OMB Number: 1205–0NEW.

Affected Public: Individuals, Private sector, Not-for profit.

Total Annual Respondents: 4,032.

Annual Frequency: The survey will be administered twice (12 and 36 months after enrollment), and the unstructured interviews will be conducted once.

Total Annual Responses: 4,032.

Average Time per Response: 30 minutes for the survey and 120 minutes for each interview.

Estimated Total Annual Burden Hours: 3,984.

Total Annual Burden Cost for Respondents: $47,280.

Information collection activity	Total respondents	Frequency	Average time per response (min)	Burden hours
Impact component:				
12-month survey	3,840	Once	30	1,920
36-month survey	3,360	Once	30	1,680
Implementation component:				
Unstructured interviews	192	Once	120	384
Total				3,984

Information collection activity	Total respondents	Annual burden (hours)	Average cost per hour	Annual burden cost
Impact component:				
12-month survey	3,840	1,920	$10	$19,200
36-month survey	3,360	1,680	$11	$18,480
Implementation component:				
Unstructured interviews	192	384	$25	$9,600
Total		3,984		$47,280

Comments submitted in response to this comment request will be summarized and/or included in the request for the Office of Management and Budget approval of the information collection request; they will also become a matter of public record.

Dated: February 23, 2011.

Jane Oates,

Assistant Secretary, Employment and Training Administration.

[FR Doc. 2011–5194 Filed 3–7–11; 8:45 am]

BILLING CODE 4510–FT–P

DEPARTMENT OF LABOR

Employment and Training Administration

Comment Request for Information Collection for Report ETA 902, Disaster Unemployment Assistance Activities (OMB Control No. 1205–0051): Extension Without Change

AGENCY: Employment and Training Administration, Labor.

ACTION: Notice.

SUMMARY: The Department of Labor, as part of its continuing effort to reduce paperwork and respondent burden, conducts a pre-clearance consultation program to provide the general public and Federal agencies with an opportunity to comment on proposed and/or continuing collections of information in accordance with the Paperwork Reduction Act of 1995 (PRA95) [44 U.S.C. 3506(c)(2)(A)]. This program helps to ensure that requested data can be provided in the desired format, reporting burden (time and financial resources) is minimized, collection instruments are clearly understood, and the impact of collection requirements on respondents can be properly assessed. Currently, the Employment and Training Administration (ETA) is soliciting comments concerning the proposed extension of the ETA 902, Disaster Unemployment Assistance Activities under the Robert T. Stafford Disaster Relief and Emergency Assistance Act, for which collection authority expires on July 31, 2011.

A copy of the proposed information collection request (ICR) can be obtained by contacting the office listed below in the addressee section of this notice.

DATES: Written comments must be submitted to the office listed in the addressee's section below on or before May 9, 2011.

ADDRESSES: Submit written comments to Miriam Thompson, U.S. Department of Labor, Employment and Training Administration, Office of Workforce Security, 200 Constitution Avenue, NW., Frances Perkins Bldg., Room S–4231, Washington, DC 20210, telephone number (202) 693–3226 (this is not a toll-free number) or by e-mail: *thompson.miriam@dol.gov.*

SUPPLEMENTARY INFORMATION:

I. Background

The ETA 902 Report, Disaster Unemployment Assistance (DUA) Activities, is a monthly report submitted by an impacted State(s) when a major disaster is declared by the President that provides for individual assistance (including DUA). The report contains data on DUA claims and payment activities associated with administering the DUA program. The information is used by ETA's Office of Workforce Security (OWS) to determine workload counts, for example, the number of individuals determined eligible or ineligible for DUA, the number of appeals filed, and the number of overpayments issued. The report also allows OWS to track States' administrative costs for the DUA program(s).

II. Review Focus

The Department of Labor is particularly interested in comments which:

* Evaluate whether the proposed collection of information is necessary for the proper performance of the functions of the agency, including whether the information will have practical utility;

* Evaluate the accuracy of the agency's estimate of the burden of the proposed collection of information, including the validity of the methodology and assumptions used;

* Enhance the quality, utility, and clarity of the information to be collected; and

* Minimize the burden of the collection of information on those who are to respond, including through the use of electronic collection techniques.

III. Current Actions

Type of Review: Extension without change.

Title: Disaster Unemployment Assistance, Disaster Payment Activities Report.

OMB Number: 1205–0051.

Affected Public: State Workforce Agencies.

Form(s): ETA 902, ETA 902a.

Total Estimated Annual Respondents: 30.

Estimated Annual Frequency: Approximately six (6) months per year.

Total Estimated Annual Responses: 180 responses.

Average Time per Response: One (1) hour.

Estimated Total Annual Burden Hours: 180 hours.

Total Annual Burden Cost for Respondents: $0.

Comments submitted in response to this comment request will be summarized and/or included in the request for Office of Management and Budget approval of the information collection request; they will also become a matter of public record.

Dated: March 1, 2011.

Jane Oates,

Assistant Secretary, Employment and Training Administration.

[FR Doc. 2011–5249 Filed 3–7–11; 8:45 am]

BILLING CODE 4510–FT–P

LIBRARY OF CONGRESS

Copyright Office

[Docket No. RM 2010–10]

Section 302 Report

AGENCY: Copyright Office, Library of Congress.

ACTION: Notice of inquiry; correction.

SUMMARY: The Copyright Office published in the **Federal Register** of

March 3, 2011, a Notice of Inquiry seeking comments for a report to Congress addressing possible recommendations for phasing out the statutory licensing requirements in Section 111, 119, and 122 of the Copyright Act.

FOR FURTHER INFORMATION CONTACT: Ben Golant, Assistant General Counsel, or Tanya M. Sandros, Deputy General Counsel, Copyright GC/I&R, P.O. Box 70400, Washington, DC 20024. Telephone: (202) 707–8380. Telefax: (202) 707–8366 or by electronic mail at *bgol@loc.gov.*

Correction

In Notice of Inquiry RM 2010–10 make the following corrections in the **DATES** section. On page 11816 in the 2nd column correct the **DATES** caption to read:

DATES: Written comments must be received in the Office of the General Counsel of the Copyright Office no later than April 18, 2011. Reply comments must be received in the Office of the General Counsel of the Copyright Office no later than May 18, 2011.

Dated: March 3, 2011.

Tanya M. Sandros,

Deputy General Counsel.

[FR Doc. 2011–5237 Filed 3–7–11; 8:45 am]

BILLING CODE 1410–30–P

NATIONAL SCIENCE FOUNDATION

Notice of Intent To Seek Approval To Continue an Information Collection

AGENCY: National Science Foundation.

ACTION: Notice and Request for Comments.

SUMMARY: The National Science Foundation (NSF) is announcing plans to request renewal of this collection. In accordance with the requirement of Section 3506(c)(2)(A) of the Paperwork Reduction Act of 1995 (Pub. L. 104–13), we are providing an opportunity for public comment on this action. After obtaining and considering public comment, NSF will prepare the submission requesting that OMB approve clearance of this collection for no longer than 3 years.

DATES: Written comments on this notice must be received by May 9, 2011 to be assured of consideration. Comments received after that date will be considered to the extent practicable.

ADDRESSES: Written comments regarding the information collection and requests for copies of the proposed information collection request should be addressed to Suzanne Plimpton, Reports Clearance Officer, National Science Foundation, 4201 Wilson Blvd., Rm. 295, Arlington, VA 22230, or by e-mail to *splimpto@nsf.gov.*

FOR FURTHER INFORMATION CONTACT: Contact Suzanne H. Plimpton, Reports Clearance Officer, National Science Foundation, 4201 Wilson Boulevard, Suite 295, Arlington, Virginia 22230; telephone 703–292–7556; or send e-mail to *splimpto@nsf.gov.* Individuals who use a telecommunications device for the deaf (TDD) may call the Federal Information Relay Service (FIRS) at 1–800–877–8339 between 8 a.m. and 8 p.m., Eastern time, Monday through Friday.

SUPPLEMENTARY INFORMATION:

Title of Collection: National Science Foundation Science Honorary Awards.

OMB Approval Number: 3145–0035.

Expiration Date of Approval: June 30, 2011.

Type of Request: Intent to seek approval to continue an information collection for three years.

Abstract: The National Science Foundation (NSF) administers several honorary awards, among them the President's National Medal of Science, the Alan T. Waterman Award, the NSB Vannevar Bush Award, and the NSB Public Service Award.

In 2003, to comply with E-government requirements, the nomination processes were converted to electronic submission through the National Science Foundation's (NSF) FastLane system. Individuals can now prepare nominations and references through *http://www.fastlane.nsf.gov/honawards/.* First-time users must register on the Fastlane Web site using the link found in the upper right-hand corner above the "Log In" box before accessing any of the honorary award categories.

Use of the Information: The Foundation has the following honorary award programs:

• President's National Medal of Science. Statutory authority for the President's National Medal of Science is contained in 42 U.S.C. 1881 (Pub. L. 86–209), which established the award and stated that "(t)he President shall * * * award the Medal on the recommendations received from the National Academy of Sciences or on the basis of such other information and evidence as * * * appropriate."

Subsequently, Executive Order 10961 specified procedures for the Award by establishing a National Medal of Science Committee which would "receive recommendations made by any other nationally representative scientific or engineering organization." On the basis of these recommendations, the Committee was directed to select its candidates and to forward its recommendations to the President.

In 1962, to comply with these directives, the Committee initiated a solicitation form letter to invite these nominations. In 1979, the Committee initiated a nomination form as an attachment to the solicitation letter. A slightly modified version of the nomination form was used in 1980.

The Committee established the following guidelines for selection of candidates:

1. Principal criterion: the total impact of an individual's work on the current state of physical, biological, mathematical, engineering or social and behavioral sciences.

2. Achievements of an unusually significant nature in relation to the potential effects on the development of scientific thought.

3. Unusually distinguished service in the general advancement of science and engineering, especially when accompanied by substantial contributions to the content of science. Recognition by peers within the scientific community.

4. Contributions to innovation and industry.

5. Influence on education through publications, teaching activities, outreach, mentoring, *etc.*

6. Must be a U.S. citizen or permanent resident who has applied for citizenship.

In 2003, the Committee changed the active period of eligibility to three years, including the year of nomination. After that time, candidates must be renominated with a new nomination package for them to be considered by the Committee.

Narratives are now restricted to two pages of text, as stipulated in the guidelines at *http://www.fastlane.nsf.gov/honawards/nms.*

• Alan T. Waterman Award. Congress established the Alan T. Waterman Award in August 1975 (42 U.S.C. 1881a (Pub. L. 94–86) and authorized NSF to "establish the Alan T. Waterman Award for research or advanced study in any of the sciences or engineering" to mark the 25th anniversary of the National Science Foundation and to honor its first Director. The annual award recognizes an outstanding young researcher in any field of science or engineering supported by NSF. In addition to a medal, the awardee receives a grant of $500,000 over a three-year period for scientific research or advanced study in the mathematical, physical, medical, biological, engineering, social, or other sciences at the institution of the recipient's choice.

The Alan T. Waterman Award Committee was established by NSF to comply with the directive contained in Pub. L. 94–86. The Committee solicits nominations from members of the National Academy of Sciences, National Academy of Engineering, scientific and technical organizations, and any other source, public or private, as appropriate.

In 1976, the Committee initiated a form letter to solicit these nominations. In 1980, a nomination form was used which standardized the nomination procedures, allowed for more effective Committee review, and permitted better staff work in a short period of time. On the basis of its review, the Committee forwards its recommendation to the Director, NSF, and the National Science Board (NSB).

Candidates must be U.S. citizens or permanent residents and must be 35 years of age or younger or not more than seven years beyond receipt of the Ph.D. degree by December 31 of the year in which they are nominated. Candidates should have demonstrated exceptional individual achievements in scientific or engineering research of sufficient quality to place them at the forefront of their peers. Criteria include originality, innovation, and significant impact on the field.

• Vannevar Bush Award. The NSB established the Vannevar Bush Award in 1980 to honor Dr. Bush's unique contributions to public service. The award recognizes an individual who, through public service activities in science and technology, has made an outstanding "contribution toward the welfare of mankind and the Nation."

The NSB *ad hoc* Vannevar Bush Award Committee annually solicits nominations from selected scientific engineering and educational societies. Candidates must be a senior stateperson who is an American citizen and meets two or more of the following criteria:

1. Distinguished himself/herself through public service activities in science and technology.
2. Pioneered the exploration, charting, and settlement of new frontiers in science, technology, education, and public service.
3. Demonstrated leadership and creativity that have inspired others to distinguished careers in science and technology.
4. Contributed to the welfare of the Nation and mankind through activities in science and technology.
5. Demonstrated leadership and creativity that have helped mold the history of advancements in the Nation's science, technology, and education.

Nominations must include a narrative description about the nominee, a curriculum vitae (without publications), and a brief citation summarizing the nominee's scientific or technological contributions to our national welfare in promotion of the progress of science. Nominations must also include two reference letters, submitted separate from the nomination through *http://www.fastlane.nsf.gov/honawards/* Nominations remain active for three years, including the year of nomination. After that time, candidates must be renominated with a new nomination for them to be considered by the selection committee.

• NSB Public Service Award. The NSB Public Service Award Committee was established in November 1996. This annual award recognizes people and organizations that have increased the public understanding of science or engineering. The award is given to an individual and to a group (company, corporation, or organization), but not to members of the U.S. Government.

Eligibility includes any individual or group (company, corporation, or organization) that has increased the public understanding of science or engineering. Members of the U.S. Government are not eligible for consideration.

Candidates for the individual and group (company, corporation, or organization) award must have made contributions to public service in areas other than research, and should meet one or more of the following criteria:

1. Increased the public's understanding of the processes of science and engineering through scientific discovery, innovation and its communication to the public.
2. Encouraged others to help raise the public understanding of science and technology.
3. Promoted the engagement of scientists and engineers in public outreach and scientific literacy.
4. Contributed to the development of broad science and engineering policy and its support.
5. Influenced and encouraged the next generation of scientist and engineers.
6. Achieved broad recognition outside the nominee's area of specialization.
7. Fostered awareness of science and technology among broad segments of the population.

Nominations must include a summary of the candidate's activities as they relate to the selection criteria; the nominator's name, address and telephone number; the name, address, and telephone number of the nominee; and the candidate's vita, if appropriate (no more than three pages).

The selection committee recommends the most outstanding candidate(s) for each category to the NSB, which approves the awardees.

Nominations remain active for a period of three years, including the year of nomination. After that time, candidates must be renominated with a new nomination for them to be considered by the selection committee.

Estimate of Burden: These are annual award programs with application deadlines varying according to the program. Public burden also may vary according to program; however, it is estimated that each submission is averaged to be 15 hours per respondent for each program. If the nominator is thoroughly familiar with the scientific background of the nominee, time spent to complete the nomination may be considerably reduced.

Respondents: Individuals, businesses or other for-profit organizations, universities, non-profit institutions, and Federal and State governments.

Estimated Number of Responses per Award: 142 responses, broken down as follows: For the President's National Medal of Science, 55; for the Alan T. Waterman Award, 60; for the Vannevar Bush Award, 12; for the Public Service Award, 20.

Estimated Total Annual Burden on Respondents: 2,780 hours, broken down by 1,100 hours for the President's National Medal of Science (20 hours per 55 respondents); 1,200 hours for the Alan T. Waterman Award (20 hours per 60 respondents); 180 hours for the Vannevar Bush Award (15 hours per 12 respondents); and 300 hours for the Public Service Award (15 hours per 20 respondents).

Frequency of Responses: Annually.

Comments: Comments are invited on (a) whether the proposed collection of information is necessary for the proper performance of the functions of the Agency, including whether the information shall have practical utility; (b) the accuracy of the Agency's estimate of the burden of the proposed collection of information; (c) ways to enhance the quality, utility, and clarity of the information on respondents, including through the use of automated collection techniques or other forms of information technology; or (d) ways to minimize the burden of the collection of information on those who are to respond, including through the use of appropriate automated, electronic, mechanical, or other technological collection techniques or other forms of information technology.

Dated: March 3, 2011.

Suzanne H. Plimpton,

Reports Clearance Officer, National Science Foundation.

[FR Doc. 2011–5151 Filed 3–7–11; 8:45 am]

BILLING CODE 7555–01–P

NATIONAL SCIENCE FOUNDATION

Agency Information Collection Activities: Comment Request

AGENCY: National Science Foundation.

ACTION: Submission for OMB review; comment request.

SUMMARY: The National Science Foundation (NSF) has submitted the following information collection requirements to OMB for review and clearance under the Paperwork Reduction Act of 1995, Public Law 104–13. Comments regarding (a) whether the collection of information is necessary for the proper performance of the functions of the agency, including whether the information will have practical utility; (b) the accuracy of the agency's estimate of burden including the validity of the methodology and assumptions used; (c) ways to enhance the quality, utility and clarity of the information to be collected; (d) ways to minimize the burden of the collection of information on those who are to respond, including through the use of appropriate automated, electronic, mechanical, or other technological collection techniques or other forms of information technology should be addressed to: Office of Information and Regulatory Affairs of OMB, Attention: Desk Officer for National Science Foundation, 725—17th Street, NW., Room 10235, Washington, DC 20503, and to Suzanne H. Plimpton, Reports Clearance Officer, National Science Foundation, 4201 Wilson Boulevard, Suite 295, Arlington, Virginia 22230 or send e-mail to *splimpto@nsf.gov.* Comments regarding these information collections are best assured of having their full effect if received within 30 days of this notification. Copies of the submission(s) may be obtained by calling 703–292–7556.

NSF may not conduct or sponsor a collection of information unless the collection of information displays a currently valid OMB control number and the agency informs potential persons who are to respond to the collection of information that such persons are not required to respond to the collection of information unless it displays a currently valid OMB control number.

SUPPLEMENTARY INFORMATION:

Title: Survey of Earned Doctorates.

OMB Control Number: 3145–0019.

Summary of Collection: The Survey of Earned Doctorates has been conducted continuously since 1958 and is jointly sponsored by six Federal agencies in order to avoid duplication. It is an accurate, timely source of information on our Nation's most precious resource—highly educated individuals. Data are obtained via paper questionnaire or Web survey from each person earning a research doctorate at the time they receive the degree. Graduate schools help distribute the Survey of Earned Doctorates to their graduating doctorate recipients. Data are collected on the doctorate recipient's field of specialty, educational background, sources of support in graduate school, debt level, postgraduation plans for employment, and demographic characteristics.

The survey will be collected in conformance with the National Science Foundation Act of 1950, as amended, and the Privacy Act of 1974. Responses from individuals are voluntary. NSF will ensure that all individually identifiable information collected will be kept strictly confidential and will be used for research or statistical purposes, analyzing data, and preparing scientific reports and articles.

Comment: On December 10, 2010 we published in the **Federal Register** (75 FR 77008) a 60-day notice of our intent to request reinstatement of this information collection authority from OMB. In that notice, we solicited public comments for 60 days ending February 10, 2011. One comment was received from the public notice. The comment came from Ms. Jean Public of Floram Park, NJ, via e-mail on December 10, 2010. Ms. Public objected to the information collection. Ms. Public had no specific suggestions for altering the data collection plans other than to discontinue them entirely.

Response: We responded to Ms. Public on December 20, 2010 describing the program, the frequency and the cost issues raised by Ms. Public. NSF believes the comment does not pertain to the collection of information on the required forms for which NSF is seeking OMB approval, and so NSF is proceeding with the clearance request.

Need and Use of the Information: The Federal government, universities, researchers, and others use the information extensively. The National Science Foundation, as the lead agency, publishes statistics from the survey in several reports, but primarily in the annual publication series, "Science and Engineering Doctorate Awards" and the Interagency Report, "Doctorate Recipients from U.S. Universities." These reports are available on the Web. NSF uses this information to prepare congressionally mandated reports such as *Science and Engineering Indicators and Women, Minorities and Persons with Disabilities in Science and Engineering.*

Description of Respondents: Individuals.

Number of Respondents: 51,000.

Frequency of Responses: Annually.

Total Burden Hours: 29,009.

Dated: March 3, 2011.

Suzanne H. Plimpton,

Reports Clearance Officer, National Science Foundation.

[FR Doc. 2011–5213 Filed 3–7–11; 8:45 am]

BILLING CODE 7555–01–P

NUCLEAR REGULATORY COMMISSION

[NRC–2011–0049]

Biweekly Notice; Applications and Amendments to Facility Operating Licenses Involving No Significant Hazards Considerations

I. Background

Pursuant to Section 189a.(2) of the Atomic Energy Act of 1954, as amended (the Act), the U.S. Nuclear Regulatory Commission (the Commission or NRC) is publishing this regular biweekly notice. The Act requires the Commission publish notice of any amendments issued, or proposed to be issued and grants the Commission the authority to issue and make immediately effective any amendment to an operating license upon a determination by the Commission that such amendment involves no significant hazards consideration, notwithstanding the pendency before the Commission of a request for a hearing from any person.

This biweekly notice includes all notices of amendments issued, or proposed to be issued from February 8, 2011 to February 23, 2011. The last biweekly notice was published on February 22, 2011 (76 FR 9821).

Notice of Consideration of Issuance of Amendments to Facility Operating Licenses, Proposed No Significant Hazards Consideration Determination, and Opportunity for a Hearing

The Commission has made a proposed determination that the following amendment requests involve no significant hazards consideration. Under the Commission's regulations in Title 10 of the Code of Federal Regulations (10 CFR), Section 50.92, this means that operation of the facility

in accordance with the proposed amendment would not (1) involve a significant increase in the probability or consequences of an accident previously evaluated; or (2) create the possibility of a new or different kind of accident from any accident previously evaluated; or (3) involve a significant reduction in a margin of safety. The basis for this proposed determination for each amendment request is shown below.

The Commission is seeking public comments on this proposed determination. Any comments received within 30 days after the date of publication of this notice will be considered in making any final determination.

Normally, the Commission will not issue the amendment until the expiration of 60 days after the date of publication of this notice. The Commission may issue the license amendment before expiration of the 60-day period provided that its final determination is that the amendment involves no significant hazards consideration. In addition, the Commission may issue the amendment prior to the expiration of the 30-day comment period should circumstances change during the 30-day comment period such that failure to act in a timely way would result, for example in derating or shutdown of the facility. Should the Commission take action prior to the expiration of either the comment period or the notice period, it will publish in the **Federal Register** a notice of issuance. Should the Commission make a final No Significant Hazards Consideration Determination, any hearing will take place after issuance. The Commission expects that the need to take this action will occur very infrequently.

Written comments may be submitted by mail to the Chief, Rules, Announcements and Directives Branch (RADB), TWB–05–B01M, Division of Administrative Services, Office of Administration, U.S. Nuclear Regulatory Commission, Washington, DC 20555–0001, and should cite the publication date and page number of this **Federal Register** notice. Written comments may also be faxed to the RADB at 301–492–3446. Documents may be examined, and/or copied for a fee, at the NRC's Public Document Room (PDR), located at One White Flint North, Room O1–F21, 11555 Rockville Pike (first floor), Rockville, Maryland 20852.

Within 60 days after the date of publication of this notice, any person(s) whose interest may be affected by this action may file a request for a hearing and a petition to intervene with respect to issuance of the amendment to the subject facility operating license. Requests for a hearing and a petition for leave to intervene shall be filed in accordance with the Commission's "Rules of Practice for Domestic Licensing Proceedings" in 10 CFR Part 2. Interested person(s) should consult a current copy of 10 CFR 2.309, which is available at the Commission's PDR, located at One White Flint North, Room O1–F21, 11555 Rockville Pike (first floor), Rockville, Maryland 20852. Publicly available records will be accessible from the Agencywide Documents Access and Management System's (ADAMS) Public Electronic Reading Room on the Internet at the NRC Web site, *http://www.nrc.gov/reading-rm/doc-collections/cfr/.* If a request for a hearing or petition for leave to intervene is filed by the above date, the Commission or a presiding officer designated by the Commission or by the Chief Administrative Judge of the Atomic Safety and Licensing Board Panel, will rule on the request and/or petition; and the Secretary or the Chief Administrative Judge of the Atomic Safety and Licensing Board will issue a notice of a hearing or an appropriate order.

As required by 10 CFR 2.309, a petition for leave to intervene shall set forth with particularity the interest of the petitioner in the proceeding, and how that interest may be affected by the results of the proceeding. The petition should specifically explain the reasons why intervention should be permitted with particular reference to the following general requirements: (1) The name, address, and telephone number of the requestor or petitioner; (2) the nature of the requestor's/petitioner's right under the Act to be made a party to the proceeding; (3) the nature and extent of the requestor's/petitioner's property, financial, or other interest in the proceeding; and (4) the possible effect of any decision or order which may be entered in the proceeding on the requestor's/petitioner's interest. The petition must also identify the specific contentions which the requestor/petitioner seeks to have litigated at the proceeding.

Each contention must consist of a specific statement of the issue of law or fact to be raised or controverted. In addition, the requestor/petitioner shall provide a brief explanation of the bases for the contention and a concise statement of the alleged facts or expert opinion which support the contention and on which the requestor/petitioner intends to rely in proving the contention at the hearing. The requestor/petitioner must also provide references to those specific sources and documents of which the petitioner is aware and on which the requestor/petitioner intends to rely to establish those facts or expert opinion. The petition must include sufficient information to show that a genuine dispute exists with the applicant on a material issue of law or fact. Contentions shall be limited to matters within the scope of the amendment under consideration. The contention must be one which, if proven, would entitle the requestor/petitioner to relief. A requestor/petitioner who fails to satisfy these requirements with respect to at least one contention will not be permitted to participate as a party.

Those permitted to intervene become parties to the proceeding, subject to any limitations in the order granting leave to intervene, and have the opportunity to participate fully in the conduct of the hearing.

If a hearing is requested, the Commission will make a final determination on the issue of no significant hazards consideration. The final determination will serve to decide when the hearing is held. If the final determination is that the amendment request involves no significant hazards consideration, the Commission may issue the amendment and make it immediately effective, notwithstanding the request for a hearing. Any hearing held would take place after issuance of the amendment. If the final determination is that the amendment request involves a significant hazards consideration, then any hearing held would take place before the issuance of any amendment.

All documents filed in NRC adjudicatory proceedings, including a request for hearing, a petition for leave to intervene, any motion or other document filed in the proceeding prior to the submission of a request for hearing or petition to intervene, and documents filed by interested governmental entities participating under 10 CFR 2.315(c), must be filed in accordance with the NRC E-Filing rule (72 FR 49139, August 28, 2007). The E-Filing process requires participants to submit and serve all adjudicatory documents over the Internet, or in some cases to mail copies on electronic storage media. Participants may not submit paper copies of their filings unless they seek an exemption in accordance with the procedures described below.

To comply with the procedural requirements of E–Filing, at least ten (10) days prior to the filing deadline, the participant should contact the Office of the Secretary by e-mail at *hearing.docket@nrc.gov,* or by telephone

at 301–415–1677, to request (1) a digital identification (ID) certificate, which allows the participant (or its counsel or representative) to digitally sign documents and access the E–Submittal server for any proceeding in which it is participating; and (2) advise the Secretary that the participant will be submitting a request or petition for hearing (even in instances in which the participant, or its counsel or representative, already holds an NRC-issued digital ID certificate). Based upon this information, the Secretary will establish an electronic docket for the hearing in this proceeding if the Secretary has not already established an electronic docket.

Information about applying for a digital ID certificate is available on NRC's public Web site at *http://www.nrc.gov/site-help/e-submittals/apply-certificates.html.* System requirements for accessing the E-Submittal server are detailed in NRC's "Guidance for Electronic Submission," which is available on the agency's public Web site at *http://www.nrc.gov/site-help/e-submittals.html.* Participants may attempt to use other software not listed on the Web site, but should note that the NRC's E-Filing system does not support unlisted software, and the NRC Meta System Help Desk will not be able to offer assistance in using unlisted software.

If a participant is electronically submitting a document to the NRC in accordance with the E-Filing rule, the participant must file the document using the NRC's online, Web-based submission form. In order to serve documents through the Electronic Information Exchange System, users will be required to install a Web browser plug-in from the NRC Web site. Further information on the Web-based submission form, including the installation of the Web browser plug-in, is available on the NRC's public Web site at *http://www.nrc.gov/site-help/e-submittals.html.*

Once a participant has obtained a digital ID certificate and a docket has been created, the participant can then submit a request for hearing or petition for leave to intervene. Submissions should be in Portable Document Format (PDF) in accordance with NRC guidance available on the NRC public Web site at *http://www.nrc.gov/site-help/e-submittals.html.* A filing is considered complete at the time the documents are submitted through the NRC's E-Filing system. To be timely, an electronic filing must be submitted to the E-Filing system no later than 11:59 p.m. Eastern Time on the due date. Upon receipt of a transmission, the E-Filing system time-stamps the document and sends the submitter an e-mail notice confirming receipt of the document. The E-Filing system also distributes an e-mail notice that provides access to the document to the NRC Office of the General Counsel and any others who have advised the Office of the Secretary that they wish to participate in the proceeding, so that the filer need not serve the documents on those participants separately. Therefore, applicants and other participants (or their counsel or representative) must apply for and receive a digital ID certificate before a hearing request/petition to intervene is filed so that they can obtain access to the document via the E-Filing system.

A person filing electronically using the agency's adjudicatory E–Filing system may seek assistance by contacting the NRC Meta System Help Desk through the "Contact Us" link located on the NRC Web site at *http://www.nrc.gov/site-help/e-submittals.html,* by e-mail at *MSHD.Resource@nrc.gov,* or by a toll-free call at 1–866–672–7640. The NRC Meta System Help Desk is available between 8 a.m. and 8 p.m., Eastern Time, Monday through Friday, excluding government holidays.

Participants who believe that they have a good cause for not submitting documents electronically must file an exemption request, in accordance with 10 CFR 2.302(g), with their initial paper filing requesting authorization to continue to submit documents in paper format. Such filings must be submitted by: (1) First class mail addressed to the Office of the Secretary of the Commission, U.S. Nuclear Regulatory Commission, Washington, DC 20555–0001, Attention: Rulemaking and Adjudications Staff; or (2) courier, express mail, or expedited delivery service to the Office of the Secretary, Sixteenth Floor, One White Flint North, 11555 Rockville Pike, Rockville, Maryland, 20852, Attention: Rulemaking and Adjudications Staff. Participants filing a document in this manner are responsible for serving the document on all other participants. Filing is considered complete by first-class mail as of the time of deposit in the mail, or by courier, express mail, or expedited delivery service upon depositing the document with the provider of the service. A presiding officer, having granted an exemption request from using E-Filing, may require a participant or party to use E-Filing if the presiding officer subsequently determines that the reason for granting the exemption from use of E-Filing no longer exists.

Documents submitted in adjudicatory proceedings will appear in NRC's electronic hearing docket which is available to the public at *http://ehd1.nrc.gov/EHD/,* unless excluded pursuant to an order of the Commission, or the presiding officer. Participants are requested not to include personal privacy information, such as social security numbers, home addresses, or home phone numbers in their filings, unless an NRC regulation or other law requires submission of such information. With respect to copyrighted works, except for limited excerpts that serve the purpose of the adjudicatory filings and would constitute a Fair Use application, participants are requested not to include copyrighted materials in their submission.

Petitions for leave to intervene must be filed no later than 60 days from the date of publication of this notice. Non-timely filings will not be entertained absent a determination by the presiding officer that the petition or request should be granted or the contentions should be admitted, based on a balancing of the factors specified in 10 CFR 2.309(c)(1)(i)–(viii).

For further details with respect to this license amendment application, see the application for amendment which is available for public inspection at the Commission's PDR, located at One White Flint North, Room O1–F21, 11555 Rockville Pike (first floor), Rockville, Maryland 20852. Publicly available records will be accessible from the ADAMS Public Electronic Reading Room on the Internet at the NRC Web site, *http://www.nrc.gov/reading-rm/adams.html.* Persons who do not have access to ADAMS or who encounter problems in accessing the documents located in ADAMS, should contact the NRC PDR Reference staff at 1–800–397–4209, 301–415–4737, or by e-mail to *pdr.resource@nrc.gov.*

R.E. Ginna Nuclear Power Plant, LLC, Docket No. 50–244, R.E. Ginna Nuclear Power Plant, Wayne County, New York

Date of amendment request: July 23, 2009.

Description of amendment request: The proposed amendment would revise several of the Required Actions in the Ginna Technical Specifications that require the suspension of operations involving positive reactivity additions or suspension of operations that would cause the reduction of the reactor coolant system boron concentration. The proposed changes are similar to those documented in Industry Technical Specification Task Force (TSTF)-286, Revision 2, Define "Operations

Involving Positive Reactivity Additions."

Basis for proposed no significant hazards consideration determination: As required by 10 CFR 50.91(a), the licensee has provided its analysis of the issue of no significant hazards consideration, which is presented below:

1. Does the proposed change involve a significant increase in the probability or consequences of an accident previously evaluated?

Response: No.

The Technical Specifications (TS) addressed in this proposed change prevent inadvertent addition of positive reactivity which could challenge the shutdown margin of the reactor core. The current TS contain rigid requirements that sometimes pose operational difficulties without significantly increasing safety. The intent of the change is to allow small, controlled, and safe insertions of positive reactivity that are now categorically prohibited to allow operational flexibility. These new activities could result in a slight change in the probability of an event occurring because reactor coolant system (RCS) manipulations that are currently prohibited would now be allowed. However, to preclude an increase in the probability of a reactivity addition accident, RCS manipulations are rigidly controlled to ensure that the reactivity remains within the required shutdown margin.

The proposed change does not permit the shutdown margin to be reduced below that required by the TS. While the proposed change will permit changes in the discretionary boron concentration above the TS requirements, this excess concentration is not credited in the Updated Final Safety Analysis Report accident analysis. Because the initial conditions assumed in the safety analysis are preserved, no increase in the consequences of an accident previously evaluated would occur. In addition, small temperature changes in the RCS impose reactivity changes by means of the moderator temperature coefficient of reactivity. These small changes are within the required shutdown margin which also bounds the reactivity addition accident analysis ensuring there is no increase in the consequence of an accident previously evaluated.

Therefore the proposed changes do not involve a significant increase in the probability or consequences of an accident previously evaluated.

2. Does the proposed change create the possibility of a new or different kind of accident from any accident previously evaluated?

Response: No.

This proposed amendment allows for minor plant operational adjustments without adversely impacting the safety analysis required shut down margin. It does not involve any change to plant equipment or the shutdown margin requirements in the TS, and no new accident precursors are created.

Therefore, the proposed change will not create the possibility of a new or different kind of accident from any accident previously evaluated.

3. Does the proposed change involve a significant reduction in a margin of safety?

Response: No.

The margin of safety in Modes 3, 4, 5, and 6 is preserved by the TS required shutdown margin which prevents a return to criticality. The proposed change will permit reductions in the discretionary shutdown margin only within the limits of the TS, thereby maintaining the margin of safety within the accident analysis.

Therefore, the proposed change will not involve a significant reduction in the margin of safety.

The NRC staff has reviewed the licensee's analysis and, based on this review, it appears that the three standards of 10 CFR 50.92(c) are satisfied. Therefore, the NRC staff proposes to determine that the amendment request involves no significant hazards consideration.

Attorney for licensee: Carey Fleming, Sr. Counsel—Nuclear Generation, Constellation Group, LLC, 750 East Pratt Street, 17th Floor, Baltimore, MD 21202.

NRC Branch Chief: Nancy L. Salgado.

Union Electric Company, Docket No. 50–483, Callaway Plant, Unit 1, Callaway County, Missouri

Date of amendment request: December 10, 2010.

Description of amendment request: The proposed amendment would modify the Callaway Plant, Unit 1, Technical Specifications (TSs) by adding new Surveillance Requirement (SR) 3.3.8.6, to TS 3.3.8, "Emergency Exhaust System (EES) Actuation Instrumentation." The new SR would require the performance of response time testing on the portion of the EES required to isolate the normal fuel building ventilation exhaust flow path and initiate the fuel building ventilation isolation signal (FBVIS) mode of operation. The new SR 3.3.8.6 would have a note excluding the radiation monitor detectors from response time testing. In addition, the amendment would revise TS Table 3.3.8–1 to indicate that the new SR 3.3.8.6 applies to automatic actuation Function 2, "Automatic Actuation Logic and Actuation Relays (BOP ESFAS [Balance of Plant Emergency Safety Features Actuation System])," and Function 3, "Fuel Building Exhaust Radiation—Gaseous." Finally, there will be corresponding changes to the Final Safety Analysis Report (FSAR).

Basis for proposed no significant hazards consideration determination: As required by 10 CFR 50.91(a), the licensee has provided its analysis of the issue of no significant hazards consideration, which is presented below:

1. Does the proposed change involve a significant increase in the probability or consequences of an accident previously evaluated?

Response: No.

There are no design changes associated with the proposed change. All design, material, and construction standards that were applicable prior to this amendment request will continue to be applicable.

The proposed change will not affect accident initiators or precursors nor adversely alter the design assumptions, conditions, and configuration of the facility or the manner in which the plant is operated and maintained with respect to such initiators or precursors. There will be no change to fuel handling methods and procedures. Therefore, there will be no changes that would serve to increase the likelihood of occurrence of a fuel handling accident.

The proposed change changes a performance requirement, but it does not physically alter safety-related systems nor affect the way in which safety-related systems perform their functions.

The proposed TS change will serve to assure that the fuel building ventilation exhaust ESF [emergency safety feature] response time is tested and confirmed to be in accordance with the system design and consistent with the assumptions of the fuel building FHA [fuel handling accident] analysis (as revised). As such, the proposed change will not alter or prevent the capability of structures, systems, and components (SSCs) to perform their intended functions for mitigating the consequences of an accident and meeting applicable acceptance limits.

The proposed change will not affect the source term used in evaluating the radiological consequences of a fuel handling accident in the fuel building. However, the Fuel Building Ventilation Exhaust ESF response time has been increased to 90 seconds in recognition of the total delay times involved in the generation of a fuel building ventilation isolation signal (FBVIS) and the times required for actuated components to change state to their required safety configurations. Consequently, the fuel handling accident radiological consequences as reported in FSAR [Final Safety Analysis Report] Table 15.7–8 have increased. However, the increases are much less than the upper limit of "minimal" as defined pursuant to 10 CFR 50.59(c)(2)(iii) and NEI [Nuclear Energy Institute] 96–07 Revision 1 ["Guidelines for 10 CFR 50.59 Implementation," November 2000]. Therefore, there is no significant increase in the calculated consequences of a postulated design basis fuel handling accident in the fuel building. The applicable radiological dose criteria of 10 CFR 100.11, 10 CFR 50 Appendix A General Design Criterion 19, and SRP [NUREG–0800, "Standard Review Plan for the Review of Safety Analysis Reports for Nuclear Power Plants: LWR [Light-Water-Reactor] Edition"] 15.7.4 will continue to be met. New SR 3.3.8.6 is added to ensure system performance consistent with the accident analyses and associated dose calculations (as revised).

Therefore, the proposed change does not involve a significant increase in the probability or consequences of an accident previously evaluated.

2. Does the proposed change create the possibility of a new or different kind of accident from any accident previously evaluated?

Response: No.

With respect to any new or different kind of accident, there are no proposed design changes nor are there any changes in the method by which any safety-related plant SSC performs its specified safety function. The proposed change will not affect the normal method of plant operation or change any operating parameters. No new accident scenarios, transient precursors, failure mechanisms, or limiting single failures will be introduced as a result of this amendment.

The proposed amendment will not alter the design or performance of the 7300 Process Protection System, Nuclear Instrumentation System, Solid State Protection System, BOP ESFAS, MSFIS [Main Steam and Feed Isolation System], or LSELS [Load Shedding and Emergency Load Sequencing] used in the plant protection systems.

The proposed change does not, therefore, create the possibility of a new or different accident from any accident previously evaluated.

3. Does the proposed change involve a significant reduction in a margin of safety?

Response: No.

There will be no effect on those plant systems necessary to assure the accomplishment of protection functions associated with reactor operation or the reactor coolant system. There will be no impact on the overpower limit, departure from nucleate boiling ratio (DNBR) limits, heat flux hot channel factor (F_Q), nuclear enthalpy rise hot channel factor ($F\Delta H$), loss of coolant accident peak cladding temperature (LOCA PCT), peak local power density, or any other limit and associated margin of safety. Required shutdown margins in the COLR [Core Operating Limits Report] will not be changed.

The proposed change does not eliminate any surveillances or alter the frequency of surveillances required by the Technical Specifications. The proposed change would add a new Technical Specification Surveillance Requirement for assuring the satisfactory performance of the fuel building ventilation exhaust ESF function in response to a[n] FBVIS. The accident analysis for a fuel handling accident in the fuel building was re-performed to support the proposed Fuel Building Ventilation Exhaust ESF response time, and this reanalysis demonstrated that the acceptance criteria continue to be met with only a slight increase in radiological consequences (*i.e.,* less than one percent).

Therefore, the proposed change does not involve a significant reduction in a margin of safety.

The NRC staff has reviewed the licensee's analysis and, based on this review, it appears that the three standards of 10 CFR 50.92(c) are satisfied. Therefore, the NRC staff proposes to determine that the amendment request involves no significant hazards consideration.

Attorney for licensee: John O'Neill, Esq., Pillsbury Winthrop Shaw Pittman LLP, 2300 N Street, NW., Washington, DC 20037.

NRC Branch Chief: Michael T. Markley.

Notice of Issuance of Amendments to Facility Operating Licenses

During the period since publication of the last biweekly notice, the Commission has issued the following amendments. The Commission has determined for each of these amendments that the application complies with the standards and requirements of the Atomic Energy Act of 1954, as amended (the Act), and the Commission's rules and regulations. The Commission has made appropriate findings as required by the Act and the Commission's rules and regulations in 10 CFR Chapter I, which are set forth in the license amendment.

Notice of Consideration of Issuance of Amendment to Facility Operating License, Proposed No Significant Hazards Consideration Determination, and Opportunity for A Hearing in connection with these actions was published in the **Federal Register** as indicated.

Unless otherwise indicated, the Commission has determined that these amendments satisfy the criteria for categorical exclusion in accordance with 10 CFR 51.22. Therefore, pursuant to 10 CFR 51.22(b), no environmental impact statement or environmental assessment need be prepared for these amendments. If the Commission has prepared an environmental assessment under the special circumstances provision in 10 CFR 51.22(b) and has made a determination based on that assessment, it is so indicated.

For further details with respect to the action see (1) the applications for amendment, (2) the amendment, and (3) the Commission's related letter, Safety Evaluation and/or Environmental Assessment as indicated. All of these items are available for public inspection at the Commission's Public Document Room (PDR), located at One White Flint North, Room O1–F21, 11555 Rockville Pike (first floor), Rockville, Maryland 20852. Publicly available records will be accessible from the Agencywide Documents Access and Management System (ADAMS) Public Electronic Reading Room on the Internet at the NRC Web site, *http://www.nrc.gov/reading-rm/adams.html.* If you do not have access to ADAMS or if there are problems in accessing the documents located in ADAMS, contact the PDR Reference staff at 1–800–397–4209, 301–415–4737 or by e-mail to *pdr.resource@nrc.gov.*

Calvert Cliffs Nuclear Power Plant, LLC, Docket Nos. 50–317 and 50–318, Calvert Cliffs Nuclear Power Plant, Unit 1 and 2, Calvert County, Maryland

Date of application for amendments: November 23, 2009, as supplemented by letters dated January 26, April 22, July 23, August 9, October 29, November 19, December 30, 2010, and January 14, January 18, January 28, February 11, and February 15, 2011.

Brief description of amendments: The amendments revise the licensing basis and the Technical Specifications to allow the use of AREVA Advanced CE–14 HTP fuel in the Calvert Cliffs reactors. The AREVA Advanced CE–14 HTP fuel design consists of standard uranium dioxide ($U0_2$) fuel pellets with gadolinium oxide (Gd_20_3) burnable poison and M5 cladding.

Date of issuance: February 18, 2011.

Effective date: As of the date of issuance to be implemented within 30 days.

Amendment Nos.: 297 and 273.

Renewed Facility Operating License Nos. DPR–53 and DPR–69: Amendments revised the License and Technical Specifications.

Date of initial notice in **Federal Register***:* May 4, 2010 (75 FR 23810). The letters dated July 23, August 9, October 29, November 19, December 30, 2010, and January 14, January 18, January 28, February 11, and February 15, 2011, provided additional information that clarified the application, did not expand the scope of the application as originally noticed, and did not change the staff's original proposed no significant hazards consideration determination as published in the **Federal Register**.

The Commission's related evaluation of these amendments is contained in a Safety Evaluation dated February 18, 2011.

No significant hazards consideration comments received: No.

Entergy Operations, Inc., Docket No. 50–382, Waterford Steam Electric Station, Unit 3, St Charles Parish, Louisiana

Date of amendment request: February 22, 2010, as supplemented by letters dated December 3, 2010, and January 19, 2011.

Brief description of amendment: The amendment modified Technical Specification (TS) ¾.9.4, "Containment Building Penetrations," to allow alternative means of penetration closure during core alterations or irradiated fuel

movement while in refueling operations. In addition, certain improvements to this TS, as well as the elimination of TS ¾.9.9, "Containment Purge Valve Isolation System," were made. The changes are similar to Revision 3 of NUREG–1432, "Standard Technical Specifications, Combustion Engineering Plants."

Date of issuance: February 23, 2011.

Effective date: As of the date of issuance and shall be implemented 90 days from the date of issuance.

Amendment No.: 231.

Facility Operating License No. NPF–38: The amendment revised the Facility Operating License and Technical Specifications.

Date of initial notice in **Federal Register***:* May 4, 2010 (75 FR 23813). The supplemental letters dated December 3, 2010, and January 19, 2011, provided additional information that clarified the application, did not expand the scope of the application as originally noticed, and did not change the staff's original proposed no significant hazards consideration determination as published in the **Federal Register**.

The Commission's related evaluation of the amendment is contained in a Safety Evaluation dated February 23, 2011.

No significant hazards consideration comments received: No.

Exelon Generation Company, LLC, Docket No. 50–461, Clinton Power Station, Unit 1, DeWitt County, Illinois

Date of application for amendment: February 15, 2010, as supplemented by letter dated May 21, 2010.

Brief description of amendment: The amendment relocates selected Surveillance Requirement frequencies from the Clinton Power Station, (CPS) Unit No. 1, technical specifications (TSs) to a licensee-controlled program. This change is based on the NRC-approved Industry Technical Specifications Task Force (TSTF) change TSTF–425, "Relocate Surveillance Frequencies to Licensee Control—Risk Informed Technical Specification Task Force (RITSTF) Initiative 5b," Revision 3, (Agencywide Documents Access and Management System (ADAMS) Accession Package No. ML090850642). Furthermore, some plant-specific deviations from TSTF–425 were also incorporated into the CPS TSs.

Date of issuance: February 15, 2011.

Effective date: As of the date of issuance and shall be implemented within 120 days.

Amendment No.: 192.

Facility Operating License No. NPF–62: The amendment revised the Technical Specifications and License.

Date of initial notice in **Federal Register**: May 4, 2010 (75 FR 23814). The May 21, 2010, supplement contained clarifying information and did not change the NRC staff's initial proposed finding of no significant hazards consideration.

The Commission's related evaluation of the amendment is contained in a Safety Evaluation dated February 15, 2011.

No significant hazards consideration comments received: No.

Exelon Generation Company, LLC, Docket Nos. 50–254 and 50–265, Quad Cities Nuclear Power Station, Units 1 and 2, Rock Island County,

Date of amendment request: February 16, 2010, as supplemented by letter dated June 22, 2010.

Brief description of amendments: The amendments relocate selected Surveillance Requirement frequencies from the Quad Cities Nuclear Power Station Units 1 and 2 Technical Specifications (TSs) to a licensee-controlled program. This change is based on the NRC-approved Industry Technical Specifications Task Force (TSTF) change TSTF–425, "Relocate Surveillance Frequencies to Licensee Control—Risk Informed Technical Specification Task Force (RITSTF) Initiative 5b," Revision 3, (Agencywide Documents Access and Management System (ADAMS) Accession Package No. ML090850642).

Date of issuance: February 18, 2011.

Effective date: As of the date of issuance and shall be implemented within 120 days.

Amendment Nos.: 248/243.

Renewed Facility Operating License Nos. DPR–29 and DPR–30: The amendments revised the Technical Specifications and License.

Date of initial notice in **Federal Register**: April 20, 2010 (75 FR 20638). The June 22, 2010, supplement, contained clarifying information and did not change the NRC staff's initial proposed finding of no significant hazards consideration.

The Commission's related evaluation of the amendments is contained in a Safety Evaluation dated February 18, 2011.

No significant hazards consideration comments received: No.

Tennessee Valley Authority, Docket No. 50–390, Watts Bar Nuclear Plant (WBN), Unit 1, Rhea County, Tennessee

Date of application for amendment: February 24, 2010, as supplemented September 20, 2010, and November 5, 2010.

Brief description of amendment: The amendment revises the Technical Specification (TS) 3.7.11, "Control Room Emergency Air Temperature Control System (CREATCS)." The amendment will only be applicable during plant modifications to upgrade the CREATCS chillers. This "one-time" TS change will be implemented during WBN Unit 1 Cycles 10 and 11 beginning March 1, 2011, and ending April 30, 2012.

Date of issuance: February 8, 2011.

Effective date: As of the date of issuance and shall be implemented no later than 90 days from date of issuance.

Amendment No.: 85.

Facility Operating License No. NPF–90: Amendment revised the License and TSs.

Date of initial notice in **Federal Register**: June 1, 2010 (75 FR 30447). The supplements dated September 20 and November 5, 2010, provided additional information that clarified the application, did not expand the scope of the application as originally noticed, and did not change the staff's original proposed no significant hazards consideration determination as published in the **Federal Register**.

The Commission's related evaluation of the amendment is contained in a Safety Evaluation dated February 8, 2011.

No significant hazards consideration comments received: No.

Dated at Rockville, Maryland, this 24th day of February 2011.

For the Nuclear Regulatory Commission.

Joseph G. Giitter,

Director, Division of Operating Reactor Licensing, Office of Nuclear Reactor Regulation.

[FR Doc. 2011–4829 Filed 3–7–11; 8:45 am]

BILLING CODE 7590–01–P

NUCLEAR REGULATORY COMMISSION

[NRC–2011–0006]

Sunshine Act Notice

AGENCY HOLDING THE MEETINGS: Nuclear Regulatory Commission.

DATES: Weeks of March 7, 14, 21, 28, April 4, 11, 2011.

PLACE: Commissioners' Conference Room, 11555 Rockville Pike, Rockville, Maryland.

STATUS: Public and Closed.

Week of March 7, 2011

Thursday, March 10, 2011

3:30 p.m.

Affirmation Session (Public Meeting) (Tentative).

Entergy Nuclear Vermont Yankee, L.L.C. and Entergy Nuclear Operations, Inc. (Vermont Yankee Nuclear Power Station), Petition for Review of LBP–10–19 (Oct. 28, 2010), Docket No. 50–271–LR. (Tentative).

Week of March 14, 2011—Tentative

There are no meetings scheduled for the week of March 14, 2011.

Week of March 21, 2011—Tentative

Thursday, March 24, 2011

9 a.m. Briefing on the 50.46a Risk-Informed Emergency Core Cooling System (ECCS) Rule (Public Meeting). (Contact: Richard Dudley, 301–415–1116.)

This meeting will be webcast live at the Web address—*http://www.nrc.gov*.

Week of March 28, 2011—Tentative

Tuesday, March 29, 2011

9 a.m. Briefing on Small Modular Reactors (Public Meeting). (Contact: Stephanie Coffin, 301–415–6877.)

This meeting will be webcast live at the Web address—*http://www.nrc.gov*.

Thursday, March 31, 2011

2:30 p.m. Discussion of Management Issues (Closed-Ex. 2).

Week of April 4, 2011—Tentative

There are no meetings scheduled for the week of April 4, 2011.

Week of April 11, 2011—Tentative

There are no meetings scheduled for the week of April 11, 2011.

* The schedule for Commission meetings is subject to change on short notice. To verify the status of meetings, call (recording)—(301) 415–1292. Contact person for more information: Rochelle Bavol, (301) 415–1651.

The NRC Commission Meeting Schedule can be found on the Internet at: *http://www.nrc.gov/public-involve/public-meetings/schedule.html*.

The NRC provides reasonable accommodation to individuals with disabilities where appropriate. If you need a reasonable accommodation to participate in these public meetings, or need this meeting notice or the transcript or other information from the public meetings in another format (*e.g.* braille, large print), please notify Bill Dosch, Chief, Work Life and Benefits Branch, at 301–415–6200, TDD: 301–415–2100, or by e-mail at *william.dosch@nrc.gov*. Determinations on requests for reasonable accommodation will be made on a case-by-case basis.

This notice is distributed electronically to subscribers. If you no longer wish to receive it, or would like to be added to the distribution, please contact the Office of the Secretary, Washington, DC 20555 (301–415–1969), or send an e-mail to *darlene.wright@nrc.gov*.

Dated: March 3, 2011.

Rochelle C. Bavol,

Policy Coordinator, Office of the Secretary.

[FR Doc. 2011–5336 Filed 3–4–11; 4:15 pm]

BILLING CODE 7590–01–P

OFFICE OF PERSONNEL MANAGEMENT

Federal Prevailing Rate Advisory Committee; Cancellation of Upcoming Meeting

AGENCY: U.S. Office of Personnel Management.

ACTION: Notice.

SUMMARY: The Federal Prevailing Rate Advisory Committee is issuing this notice to cancel the March 17, 2011, public meeting scheduled to be held in Room 5A06A, U.S. Office of Personnel Management Building, 1900 E Street, NW., Washington, DC. The original **Federal Register** notice announcing this meeting was published Monday, December 6, 2010, at 75 FR 75706.

FOR FURTHER INFORMATION CONTACT: Madeline Gonzalez, 202–606–2838; e-mail *pay-performance-policy@opm.gov;* or FAX: (202) 606–4264.

U.S. Office of Personnel Management.

Sheldon Friedman,

Chairman, Federal Prevailing Rate Advisory Committee.

[FR Doc. 2011–5266 Filed 3–7–11; 8:45 am]

BILLING CODE 6325–49–P

SECURITIES AND EXCHANGE COMMISSION

Sunshine Act Meeting

Notice is hereby given, pursuant to the provisions of the Government in the Sunshine Act, Public Law 94–409, that the Securities and Exchange Commission will hold a Closed Meeting on Thursday, March 10, 2011 at 2 p.m.

Commissioners, Counsel to the Commissioners, the Secretary to the Commission, and recording secretaries will attend the Closed Meeting. Certain staff members who have an interest in the matters also may be present.

The General Counsel of the Commission, or his designee, has certified that, in his opinion, one or more of the exemptions set forth in 5 U.S.C. 552b(c)(3), (5), (7), 9(B) and (10) and 17 CFR 200.402(a)(3), (5), (7), 9(ii) and (10), permit consideration of the scheduled matters at the Closed Meeting.

Commissioner Walter, as duty officer, voted to consider the items listed for the Closed Meeting in a closed session.

The subject matter of the Closed Meeting scheduled for Thursday, March 10, 2011 will be:

Institution and settlement of injunctive actions;

Institution and settlement of administrative proceedings; and other matters relating to enforcement proceedings.

At times, changes in Commission priorities require alterations in the scheduling of meeting items.

For further information and to ascertain what, if any, matters have been added, deleted or postponed, please contact:

The Office of the Secretary at (202) 551–5400.

Dated: March 3, 2011.

Elizabeth M. Murphy,

Secretary.

[FR Doc. 2011–5270 Filed 3–4–11; 8:45 am]

BILLING CODE 8011–01–P

SECURITIES AND EXCHANGE COMMISSION

[Release No. 34–64005; File No. SR–FINRA–2011–007]

Self-Regulatory Organizations; Financial Industry Regulatory Authority, Inc.; Notice of Filing and Immediate Effectiveness of Proposed Rule Change Relating to Correct Cross-References in the Customer Code

March 2, 2011.

Pursuant to Section 19(b)(1) of the Securities Exchange Act of 1934 ("Act"),[1] and Rule 19b–4 thereunder,[2] notice is hereby given that on February 16, 2011, the Financial Industry Regulatory Authority, Inc. ("FINRA") filed with the Securities and Exchange Commission ("SEC" or "Commission") the proposed rule change as described in Items I and II below, which Items have been substantially prepared by FINRA. FINRA has designated the proposed rule change as concerned solely with the administration of the self-regulatory organization under

[1] 15 U.S.C. 78s(b)(1).

[2] 17 CFR 240.19b–4.

Section 19(b)(3)(A)(iii) of the Act[3] and Rule 19b–4(f)(3) thereunder,[4] which renders the proposal effective upon receipt of this filing by the Commission. The Commission is publishing this notice to solicit comments on the proposed rule change from interested persons.

I. Self-Regulatory Organization's Statement of the Terms of Substance of the Proposed Rule Change

FINRA is proposing to amend various rules of the Code of Arbitration Procedure for Customer Disputes (Customer Code) to correct cross-references to rules that were changed by the approval of another rule filing.

The text of the proposed rule change is available on FINRA's Web site at *http://www.finra.org,* at the principal office of FINRA and at the Commission's Public Reference Room.

II. Self-Regulatory Organization's Statement of the Purpose of, and Statutory Basis for, the Proposed Rule Change

In its filing with the Commission, FINRA included statements concerning the purpose of and basis for the proposed rule change and discussed any comments it received on the proposed rule change. The text of these statements may be examined at the places specified in Item IV below. FINRA has prepared summaries, set forth in sections A, B, and C below, of the most significant aspects of such statements.

A. Self-Regulatory Organization's Statement of the Purpose of, and Statutory Basis for, the Proposed Rule Change

1. Purpose

On January 31, 2011, the SEC approved a proposal to amend the panel composition rule, and related rules, of the Customer Code to provide customers with the option to choose an all public arbitration panel in all cases (Optional All Public Panel Proposal).[5] The proposal changed substantively most of the rules in Part IV of the Customer Code to reflect the option to choose an all public arbitration panel in all cases. Further, many of the Part IV rules of the Customer Code were also re-numbered when some of the old rules were eliminated or combined with other rules. As a result of the changes by the proposal, several cross-references to old Part IV rules in other rules of the Customer Code became inaccurate.

FINRA is, therefore, proposing to amend the Customer Code to correct the cross-references that were changed as a result of the Optional All Public Panel Proposal.[6] The new proposal would amend Rules 12213(a), 12309(c), 12314, 12503(c), 12800(e), and 12903(a). FINRA has filed the proposed rule change for immediate effectiveness. The effective date and the implementation date will be the date of filing.

2. Statutory Basis

FINRA believes that the proposed rule change is consistent with the provisions of Section 15A(b)(6) of the Act,[7] which requires, among other things, that FINRA rules must be designed to prevent fraudulent and manipulative acts and practices, to promote just and equitable principles of trade, and, in general, to protect investors and the public interest. FINRA believes that the proposed rule change will assist in the efficient administration of arbitrations by correcting inaccurate cross-references in the Customer Code. FINRA believes these technical, non-substantive amendments will enhance the Code by making it easier to understand and apply.

B. Self-Regulatory Organization's Statement on Burden on Competition

FINRA does not believe that the proposed rule change will result in any burden on competition that is not necessary or appropriate in furtherance of the purposes of the Act.

C. Self-Regulatory Organization's Statement on Comments on the Proposed Rule Change Received From Members, Participants, or Others

Written comments were neither solicited nor received.

III. Date of Effectiveness of the Proposed Rule Change and Timing for Commission Action

Because the foregoing proposed rule change is concerned solely with the administration of the self-regulatory organization, it has become effective pursuant to Section 19(b)(3)(A) of the Act[8] and paragraph (f)(3) of Rule 19b-4 thereunder.[9]

At any time within 60 days of the filing of the proposed rule change, the Commission summarily may temporarily suspend such rule change if it appears to the Commission that such action is necessary or appropriate in the public interest, for the protection of investors, or otherwise in furtherance of the purposes of the Act. If the Commission takes such action, the Commission shall institute proceedings to determine whether the proposed rule should be approved or disapproved.

IV. Solicitation of Comments

Interested persons are invited to submit written data, views and arguments concerning the foregoing, including whether the proposed rule change is consistent with the Act. Comments may be submitted by any of the following methods:

Electronic Comments

- Use the Commission's Internet comment form (*http://www.sec.gov/rules/sro.shtml*); or
- Send an e-mail to *rule-comments@sec.gov.* Please include File Number SR–FINRA–2011–007 on the subject line.

Paper Comments

- Send paper comments in triplicate to Elizabeth M. Murphy, Secretary, Securities and Exchange Commission, 100 F Street, NE., Washington, DC 20549–1090.

All submissions should refer to File Number SR–FINRA–2011–007. This file number should be included on the subject line if e-mail is used.

To help the Commission process and review your comments more efficiently, please use only one method. The Commission will post all comments on the Commission's Internet Web site (*http://www.sec.gov/rules/sro.shtml*). Copies of the submission, all subsequent amendments, all written statements with respect to the proposed rule change that are filed with the Commission, and all written communications relating to the proposed rule change between the Commission and any person, other than those that may be withheld from the public in accordance with the provisions of 5 U.S.C. 552, will be available for Web site viewing and printing in the Commission's Public Reference Room, 100 F Street, NE., Washington, DC 20549, on official business days between the hours of 10 a.m. and 3 p.m. Copies of such filing also will be available for inspection and copying at the principal office of FINRA. All comments received will be posted without change; the Commission does not edit personal identifying information from submissions. You should submit only information that you wish to make available publicly. All submissions should refer to File

[3] 15 U.S.C. 78s(b)(3)(A)(iii).

[4] 17 CFR 240.19b–4(f)(3).

[5] *See* Securities Exchange Act Release No. 63799 (Jan. 31, 2011), 76 FR 6500 (Feb. 4, 2011) (Order Approving File No. SR–FINRA–2010–053).

[6] *Id.*

[7] 15 U.S.C. 78o–3(b)(6).

[8] 15 U.S.C. 78s(b)(3)(A).

[9] 17 CFR 240.19b–4(f)(3).

Number SR–FINRA–2011–007 and should be submitted on or before March 29, 2011.

For the Commission, by the Division of Trading and Markets, pursuant to delegated authority.[10]

Cathy H. Ahn,

Deputy Secretary.

[FR Doc. 2011–5139 Filed 3–7–11; 8:45 am]

BILLING CODE 8011–01–P

SECURITIES AND EXCHANGE COMMISSION

[Release No. 34–64009; File No. SR–BX–2011–014]

Self-Regulatory Organizations; NASDAQ OMX BX, Inc.; Notice of Filing and Immediate Effectiveness of Proposed Rule Change To Amend the BOX Trading Rules To Expand the Short Term Option Series Program

March 2, 2011.

Pursuant to Section 19(b)(1) of the Securities Exchange Act of 1934 ("Act") [1] and Rule 19b–4 thereunder,[2] notice is hereby given that, on March 1, 2011, NASDAQ OMX BX, Inc. (the "Exchange") filed with the Securities and Exchange Commission ("Commission") the proposed rule change as described in Items I and II below, which Items have been prepared by the Exchange. The Commission is publishing this notice to solicit comments on the proposed rule change from interested persons.

I. Self-Regulatory Organization's Statement of the Terms of Substance of the Proposed Rule Change

The Exchange proposes to amend Chapter IV, Section 6 (Series of Options Contracts Open for Trading) and Chapter XIV, Section 10 (Terms of Index Option Contracts) of the Rules of the Boston Options Exchange Group, LLC ("BOX") to expand the Short Term Option Series Program ("Weeklys Program") so that BOX may select fifteen option classes on which Weekly options may be opened. The text of the proposed rule change is available from the principal office of the Exchange, on the Commission's Web site at *http://www.sec.gov,* at the Commission's Public Reference Room, and also on the Exchange's Internet Web site at *http://nasdaqomxbx.cchwallstreet.com/NASDAQOMXBX/Filings/.*

II. Self-Regulatory Organization's Statement of the Purpose of, and Statutory Basis for, the Proposed Rule Change

In its filing with the Commission, the self-regulatory organization included statements concerning the purpose of, and basis for, the proposed rule change and discussed any comments it received on the proposed rule change. The text of these statements may be examined at the places specified in Item IV below. The self-regulatory organization has prepared summaries, set forth in Sections A, B, and C below, of the most significant aspects of such statements.

A. Self-Regulatory Organization's Statement of the Purpose of, and Statutory Basis for, the Proposed Rule Change

1. Purpose

The purpose of this proposed rule change is to amend Chapter IV, Section 6 (Series of Options Contracts Open for Trading) and Chapter XIV, Section 10 (Terms of Index Option Contracts) of the Rules of the Boston Options Exchange Group, LLC ("BOX") to expand the Short Term Option Series Program ("Weeklys Program") so that BOX may select fifteen option classes on which Weekly options may be opened.[3] The Weeklys Program is codified in the Supplementary Material to the BOX Rules Sections identified above. These rules provide that after an option class has been approved for listing and trading on BOX, BOX may open for trading on any Thursday or Friday that is a business day series of options on no more than five option classes that expire on the Friday of the following business week that is a business day. In addition to the five-option class limitation, there is also a limitation that no more than twenty series for each expiration date in those classes that may be opened for trading.[4] Furthermore, the strike price of each Weekly option has to be fixed with approximately the same number of strike prices being opened above and below the value of the underlying security at about the time that the Weekly options are initially opened for trading on BOX, and with strike prices being within thirty percent (30%) above or below the closing price of the underlying security from the preceding day. The Exchange does not propose any changes to these additional Weeklys Program limitations. The Exchange proposes only to increase from five to fifteen the number of option classes that may be opened pursuant to the Weeklys Program.

The principal reason for the proposed expansion is customer demand for adding, or not removing, Weekly option classes from the Program. Since there is reciprocity in matching other exchanges' Weekly option choices, BOX discontinues trading Weekly option classes that other exchanges change from week-to-week. BOX believes that these class pick changes have negatively impacted investors and traders, particularly retail public customers, who have, on occasion requested that BOX add Weekly option classes.

BOX understands that a retail investor recently requested another exchange to reinstate a Weekly option class that the exchange had removed from trading because of the five-class option limit within the Weekly Program. The investor advised that the removed class was a powerful tool for hedging a market sector, and that various strategies that the investor put into play were disrupted and eliminated when the class was removed. BOX feels that it is essential that such negative, potentially very costly impacts on retail investors are eliminated by modestly expanding the Program to enable additional classes to be traded.

With regard to the impact of this proposal on system capacity, BOX has analyzed its capacity and represents that it and the Options Price Reporting Authority ("OPRA") have the necessary systems capacity to handle the potential additional traffic associated with trading of an expanded number of classes in the Weeklys Program.

BOX believes that the Weeklys Program has provided investors with greater trading opportunities and flexibility and the ability to more closely tailor their investment and risk management strategies and decisions. Furthermore, BOX has had to eliminate option classes on numerous occasions because of the limitation imposed by the

[10] 17 CFR 200.30–3(a)(12).

[1] 15 U.S.C. 78s(b)(1).

[2] 17 CFR 240.19b–4.

[3] The Exchange's Weeklys Program became effective on July 15, 2010. See Securities Exchange Act Release No. 62505 (July 15, 2010), 75 FR 42792 (July 22, 2010) (SR–BX–2010–047).

[4] However, if BOX opens less than twenty (20) Weekly options for a Weekly Option Expiration Date, additional series may be opened for trading on BOX when the Exchange deems it necessary to maintain an orderly market, to meet customer demand or when the market price of the underlying security moves substantially from the exercise price or prices of the series already opened. Any additional strike prices listed by the Exchange shall be within thirty percent (30%) above or below the current price of the underlying security. BOX may also open additional strike prices of Weekly Option Series that are more than 30% above or below the current price of the underlying security provided that demonstrated customer interest exists for such series, as expressed by institutional, corporate or individual customers or their brokers (market-makers trading for their own account shall not be considered when determining customer interest under this provision).

Program.[5] For these reasons, the Exchange requests an expansion of the current Weeklys Program and the opportunity to provide investors with additional short term option classes for investment, trading, and risk management purposes.

Finally, the Commission has requested, and BOX has agreed for the purposes of this filing, to submit a report to the Commission providing an analysis of the Weeklys Program (the "Report"). The Report will cover the period from the date of effectiveness of the Weeklys Program through January 2011, and will describe the experience of BOX with the Weeklys Program in respect of the options classes that BOX included in such program.[6]

The Report will be submitted on a confidential basis under separate cover at the same time as this proposed rule change.

2. Statutory Basis

The Exchange believes that its proposal is consistent with Section 6(b) of the Act[7] in general, and furthers the objectives of Section 6(b)(5) of the Act[8] in particular, in that it is designed to prevent fraudulent and manipulative acts and practices, to promote just and equitable principles of trade, to foster cooperation and coordination with persons engaged in facilitating transactions in securities, and to remove impediments to and perfect the mechanisms of a free and open market and a national market system, and, in general, to protect investors and the public interest. The Exchange believes that expanding the number of classes eligible to participate in the Weeklys Program will allow the investing public and other market participants to better manage their risk exposure, and would benefit investors by giving them more flexibility to closely tailor their investment decisions in a greater number of securities. While the expansion of the Weeklys Program will generate additional quote traffic, BOX does not believe that this increased traffic will become unmanageable since the proposal is limited to a fixed number of classes. Further, BOX does not believe that the proposal will result in a material proliferation of additional series because it is limited to a fixed number of classes and BOX does not believe that the additional price points will result in fractured liquidity.

B. Self-Regulatory Organization's Statement on Burden on Competition

The Exchange does not believe that the proposed rule change will impose any burden on competition not necessary or appropriate in furtherance of the purposes of the Act.

C. Self-Regulatory Organization's Statement on Comments on the Proposed Rule Change Received From Members, Participants, or Others

The Exchange has neither solicited nor received comments on the proposed rule change.

III. Date of Effectiveness of the Proposed Rule Change and Timing for Commission Action

Because the foregoing proposed rule change does not significantly affect the protection of investors or the public interest, does not impose any significant burden on competition, and, by its terms, does not become operative for 30 days from the date on which it was filed, or such shorter time as the Commission may designate, it has become effective pursuant to Section 19(b)(3)(A) of the Act[9] and Rule 19b–4(f)(6) thereunder.[10]

The Exchange has requested that the Commission waive the 30-day operative delay. The Commission believes that waiver of the operative delay is consistent with the protection of investors and the public interest because the proposal is substantially similar to that of another exchange that has been approved by the Commission.[11] Therefore, the Commission designates the proposal operative upon filing.[12]

At any time within 60 days of the filing of the proposed rule change, the Commission summarily may temporarily suspend such rule change if it appears to the Commission that such action is necessary or appropriate in the public interest, for the protection of investors, or otherwise in furtherance of the purposes of the Act.

IV. Solicitation of Comments

Interested persons are invited to submit written data, views, and arguments concerning the foregoing, including whether the proposed rule change is consistent with the Act. Comments may be submitted by any of the following methods:

Electronic Comments

- Use the Commission's Internet comment form (*http://www.sec.gov/rules/sro.shtml*); or
- Send an e-mail to *rule-comments@sec.gov*. Please include File Number SR–BX–2011–014 on the subject line.

Paper Comments

- Send paper comments in triplicate to Elizabeth M. Murphy, Secretary, Securities and Exchange Commission, 100 F Street, NE., Washington, DC 20549–1090.

All submissions should refer to File Number SR–BX–2011–014. This file number should be included on the subject line if e-mail is used. To help the Commission process and review your comments more efficiently, please use only one method. The Commission will post all comments on the Commission's Internet Web site (*http://www.sec.gov/rules/sro.shtml*). Copies of the submission, all subsequent amendments, all written statements with respect to the proposed rule change that are filed with the Commission, and all written communications relating to the proposed rule change between the Commission and any person, other than those that may be withheld from the public in accordance with the provisions of 5 U.S.C. 552, will be available for Web site viewing and printing in the Commission's Public Reference Room, 100 F Street, NE., Washington, DC 20549, on official business days between the hours of 10 a.m. and 3 p.m. Copies of the filing also will be available for inspection and

[5] As discussed above, because of the reciprocity provision of the Weeklys Program, the classes that BOX lists to participate in the Weeklys Program change when another exchange changes its class selections for the Weeklys Program.

[6] The Report would include the following: (1) Data and written analysis on the open interest and trading volume in the classes for which Short Term Option Series were opened; (2) an assessment of the appropriateness of the option classes selected for the Weeklys Program; (3) an assessment of the impact of the Weeklys Program on the capacity of BOX, OPRA, and market data vendors (to the extent data from market data vendors is available); (4) any capacity problems or other problems that arose during the operation of the Weeklys Program and how BOX addressed such problems; (5) any complaints that BOX or the Exchange received during the operation of the Weeklys Program and how they were addressed; and (6) any additional information that would assist in assessing the operation of the Weeklys Program.

[7] 15 U.S.C. 78f(b).

[8] 15 U.S.C. 78f(b)(5).

[9] 15 U.S.C. 78s(b)(3)(A).

[10] 17 CFR 240.19b–4(f)(6). In addition, Rule 19b–4(f)(6)(iii) requires the Exchange to give the Commission written notice of the Exchange's intent to file the proposed rule change, along with a brief description and text of the proposed rule change, at least five business days prior to the date of filing of the proposed rule change, or such shorter time as designated by the Commission. The Exchange has satisfied this requirement.

[11] *See* Securities Exchange Act Release No. 63875 (February 9, 2011), 76 FR 8793 (February 15, 2011) (SR–Phlx–2010–183) (order approving expansion of Short Term Option Program).

[12] For purposes only of waiving the 30-day operative delay, the Commission has considered the proposed rule's impact on efficiency, competition, and capital formation. *See* 15 U.S.C. 78c(f).

copying at the principal office of the Exchange. All comments received will be posted without change; the Commission does not edit personal identifying information from submissions. You should submit only information that you wish to make available publicly. All submissions should refer to File Number SR–BX–2011–014 and should be submitted on or before March 29, 2011.

For the Commission, by the Division of Trading and Markets, pursuant to delegated authority.[13]

Cathy H. Ahn,

Deputy Secretary.

[FR Doc. 2011–5141 Filed 3–7–11; 8:45 am]

BILLING CODE 8011–01–P

SECURITIES AND EXCHANGE COMMISSION

[Release No. 34–64014; File No. SR–NYSEAmex–2011–10]

Self-Regulatory Organizations; NYSE Amex LLC; Notice of Filing and Immediate Effectiveness of Proposed Rule Change Extending the Pilot Period of the Exchange's Prior Approvals To Receive Inbound Routes of Equities Orders From Archipelago Securities LLC

March 2, 2011.

Pursuant to Section 19(b)(1) of the Securities Exchange Act of 1934 ("Act")[1] and Rule 19b–4 thereunder,[2] notice is hereby given that, on February 24, 2011, NYSE Amex LLC (the "Exchange" or "NYSE Amex") filed with the Securities and Exchange Commission (the "Commission") the proposed rule change as described in Items I and II below, which Items have been prepared by NYSE Amex. The Commission is publishing this notice to solicit comments on the proposed rule change from interested persons.

I. Self-Regulatory Organization's Statement of the Terms of Substance of the Proposed Rule Change

The Exchange proposes to extend the pilot period of the Exchange's prior approvals to receive inbound routes of equities orders from Archipelago Securities LLC ("Arca Securities"), an NYSE Amex affiliated member. The text of the proposed rule change is available at the Exchange, the Commission's Public Reference Room, and *http://www.nyse.com.*

[13] 17 CFR 200.30–3(a)(12).

[1] 15 U.S.C. 78s(b)(1).

[2] 17 CFR 240.19b–4.

II. Self-Regulatory Organization's Statement of the Purpose of, and Statutory Basis for, the Proposed Rule Change

In its filing with the Commission, the self-regulatory organization included statements concerning the purpose of, and basis for, the proposed rule change and discussed any comments it received on the proposed rule change. The text of those statements may be examined at the places specified in Item IV below. The Exchange has prepared summaries, set forth in sections A, B, and C below, of the most significant parts of such statements.

A. Self-Regulatory Organization's Statement of the Purpose of, and the Statutory Basis for, the Proposed Rule Change

1. Purpose

Currently, Arca Securities is the approved outbound order routing facility of the Exchange.[3] Arca Securities is also the approved outbound order routing facility of the New York Stock Exchange ("NYSE") and NYSE Arca, Inc. ("NYSE Arca").[4] The Exchange has also been previously approved to receive inbound routes of equities orders by Arca Securities in its capacity as an order routing facility of the NYSE and NYSE Arca.[5] The Exchange's authority to receive inbound routes of equities orders by Arca Securities is subject to a pilot period ending March 31, 2011.[6] The Exchange hereby seeks to extend the previously approved pilot period (with the attendant obligations and conditions) for an additional six months, through September 30, 2011.

2. Statutory Basis

The proposed rule change is consistent with Section 6(b) of the Securities Exchange Act of 1934 (the "Act"),[7] in general, and furthers the objectives of Section 6(b)(5),[8] in particular, in that it is designed to prevent fraudulent and manipulative acts and practices, to promote just and equitable principles of trade, to foster cooperation and coordination with persons engaged in facilitating transactions in securities, and to remove impediments to and perfect the mechanism of a free and open market and a national market system. Specifically, the proposed rule change will allow the Exchange to continue receiving inbound routes of equities orders from Arca Securities acting in its capacity as a facility of the NYSE and NYSE Arca, in a manner consistent with prior approvals and established protections. The Exchange believes that extending the previously approved pilot period for six months will permit both the Exchange and the Commission to further assess the impact of the Exchange's authority to receive direct inbound routes of equities orders via Arca Securities (including the attendant obligations and conditions).[9]

B. Self-Regulatory Organization's Statement on Burden on Competition

The Exchange does not believe that the proposed rule change will impose any burden on competition that is not necessary or appropriate in furtherance of the purposes of the Act.

C. Self-Regulatory Organization's Statement on Comments on the Proposed Rule Change Received From Members, Participants, or Others

No written comments were solicited or received with respect to the proposed rule change.

III. Date of Effectiveness of the Proposed Rule Change and Timing for Commission Action

Because the foregoing rule change does not: (i) Significantly affect the protection of investors or the public interest; (ii) impose any significant burden on competition; and (iii) become operative for 30 days after the date on which it was filed, or such shorter time

[3] *See* Securities Exchange Act Release No. 59009 (November 24, 2008), 73 FR 73363 (December 2, 2008) (order approving SR–NYSEALTR–2008–07); *see also* Securities Exchange Act Release No. 59473 (February 27, 2009) 74 FR 9853 (March 6, 2009) (order approving SR–NYSEALTR–2009–18).

[4] *See* Securities Exchange Act Release No. 55590 (April 5, 2007), 72 FR 18707 (April 13, 2007) (notice of immediate effectiveness of SR–NYSE–2007–29); *see also* Securities Exchange Act Release No. 58680 (September 29, 2008), 73 FR 58283 (October 6, 2008) (order approving SR–NYSE–2008–76). *See* Securities Exchange Act Release No. 54238 (July 28, 2006), 71 FR 44758 (August 7, 2006) (order approving SR–NYSEArca–2006–13); *see also* Securities Exchange Act Release No. 52497 (September 22, 2005), 70 FR 56949 (September 29, 2005) (SR–PCX–2005–90); *see also* Securities Exchange Act Release No. 44983 (October 25, 2001), 66 FR 55225 (November 1, 2001) (SR–PCX–00–25); *see also* Securities Exchange Act Release No. 58681 (September 29, 2008), 73 FR 58285 (October 6, 2008) (order approving NYSEArca–2008–90).

[5] *See* Securities Exchange Act Release No. 58673 (September 29, 2008), 73 FR 57707 (October 3, 2008) (order approving SR–Amex-2008–62). *See also* Securities Exchange Act Release No. 58705 (October 1, 2008), 73 FR 58995 (October 8, 2008) (order approving SR–AMEX–2008–63).

[6] *See* Securities Exchange Act Release No. 62831 (September 2, 2010), 75 FR 55388 (September 10, 2010) (Notice of immediate effectiveness of SR–NYSEAmex–2010–91).

[7] 15 U.S.C. 78f(b).

[8] 15 U.S.C. 78f(b)(5).

[9] The Exchange is currently analyzing the condition regarding non-public information and system changes in order to better reflect the operation of Arca Securities.

as the Commission may designate, it has become effective pursuant to Section 19(b)(3)(A) of the Act [10] and Rule 19b–4(f)(6) thereunder.[11]

At any time within 60 days of the filing of the proposed rule change, the Commission summarily may temporarily suspend such rule change if it appears to the Commission that such action is necessary or appropriate in the public interest, for the protection of investors, or otherwise in furtherance of the purposes of the Act.

IV. Solicitation of Comments

Interested persons are invited to submit written data, views, and arguments concerning the foregoing, including whether the proposed rule change is consistent with the Act. Comments may be submitted by any of the following methods:

Electronic Comments

- Use the Commission's Internet comment form (*http://www.sec.gov/rules/sro.shtml*); or
- Send an e-mail to *rule-comments@sec.gov.* Please include File Number SR–NYSEAmex–2011–10 on the subject line.

Paper Comments

- Send paper comments in triplicate to Elizabeth M. Murphy, Secretary, Securities and Exchange Commission, 100 F Street, NE., Washington, DC 20549–1090.

All submissions should refer to File Number SR–NYSEAmex–2011–10. This file number should be included on the subject line if e-mail is used. To help the Commission process and review your comments more efficiently, please use only one method. The Commission will post all comments on the Commission's Internet Web site (*http://www.sec.gov/rules/sro.shtml).* Copies of the submission, all subsequent amendments, all written statements with respect to the proposed rule change that are filed with the Commission, and all written communications relating to the proposed rule change between the Commission and any person, other than those that may be withheld from the public in accordance with the provisions of 5 U.S.C. 552, will be available for Web site viewing and printing in the Commission's Public Reference Room, 100 F Street, NE., Washington, DC 20549, on official business days between the hours of 10 a.m. and 3 p.m. Copies of the filing also will be available for inspection and copying at the principal office of the Exchange. All comments received will be posted without change; the Commission does not edit personal identifying information from submissions. You should submit only information that you wish to make available publicly. All submissions should refer to File Number SR–NYSEAmex–2011–10 and should be submitted on or before March 29, 2011.

For the Commission, by the Division of Trading and Markets, pursuant to delegated authority.[12]

Cathy H. Ahn,

Deputy Secretary.

[FR Doc. 2011–5192 Filed 3–7–11; 8:45 am]

BILLING CODE 8011–01–P

[10] 15 U.S.C. 78s(b)(3)(A).

[11] 17 CFR 240.19b–4(f)(6).

[12] 17 CFR 200.30–3(a)(12).

SECURITIES AND EXCHANGE COMMISSION

[Release No. 34–64013; File No. SR–NYSE–2011–08]

Self-Regulatory Organizations; New York Stock Exchange LLC; Notice of Filing and Immediate Effectiveness of Proposed Rule Change Extending the Pilot Period of the Exchange's Prior Approvals To Receive Inbound Routes of Certain Equities Orders From Archipelago Securities LLC

March 2, 2011.

Pursuant to Section 19(b)(1) of the Securities Exchange Act of 1934 ("Act") [1] and Rule 19b–4 thereunder,[2] notice is hereby given that, on February 24, 2011, New York Stock Exchange LLC (the "Exchange" or "NYSE") filed with the Securities and Exchange Commission (the "Commission") the proposed rule change as described in Items I, II, and III below, which Items have been prepared by NYSE. The Commission is publishing this notice to solicit comments on the proposed rule change from interested persons.

I. Self-Regulatory Organization's Statement of the Terms of Substance of the Proposed Rule Change

The Exchange proposes to extend the pilot period of the Exchange's prior approvals to receive inbound routes of certain equities orders from Archipelago Securities LLC ("Arca Securities"), an NYSE affiliated member. The text of the proposed rule change is available at the Exchange, the Commission's Public Reference Room, and *http://www.nyse.com.*

[1] 15 U.S.C. 78s(b)(1).

[2] 17 CFR 240.19b–4.

II. Self-Regulatory Organization's Statement of the Purpose of, and Statutory Basis for, the Proposed Rule Change

In its filing with the Commission, the self-regulatory organization included statements concerning the purpose of, and basis for, the proposed rule change and discussed any comments it received on the proposed rule change. The text of those statements may be examined at the places specified in Item IV below. The Exchange has prepared summaries, set forth in sections A, B, and C below, of the most significant parts of such statements.

A. Self-Regulatory Organization's Statement of the Purpose of, and the Statutory Basis for, the Proposed Rule Change

1. Purpose

Currently, Arca Securities is the approved outbound order routing facility of the Exchange.[3] Arca Securities is also the approved outbound order routing facility of NYSE Arca, Inc. ("NYSE Arca") and NYSE Amex LLC ("NYSE Amex").[4] The Exchange has also been previously approved to receive inbound routes of equities orders by Arca Securities in its capacity as an order routing facility of NYSE Arca and NYSE Amex.[5] The Exchange's authority to receive inbound routes of equities orders by Arca Securities is subject to a pilot period ending March 31, 2011.[6] The Exchange

[3] *See* Securities Exchange Act Release No. 55590 (April 5, 2007), 72 FR 18707 (April 13, 2007) (notice of immediate effectiveness of SR–NYSE–2007–29); *see also* Securities and Exchange Act Release No. 58680 (September 29, 2008), 73 FR 58283 (October 6, 2008) (order approving SR–NYSE–2008–76).

[4] *See* Securities Exchange Act Release No. 54238 (July 28, 2006), 71 FR 44758 (August 7, 2006) (order approving SR–NYSE–2006–13); *see also* Securities Exchange Act Release No. 52497 (September 22, 2005), 70 FR 56949 (September 29, 2005) (SR–PCX–2005–90); *see also* Securities Exchange Act Release No. 44983 (October 25, 2001), 66 FR 55225 (November 1, 2001) (SR–PCX–00–25); *see also* Securities Exchange Act Release No. 58681 (September 29, 2008), 73 FR 58285 (October 6, 2008) (order approving NYSEArca–2008–90). *See* Securities Exchange Act Release No. 59009 (November 24, 2008), 73 FR 73363 (December 2, 2008) (order approving SR–NYSEALTR–2088–07); *see also* Securities Exchange Act Release No. 59473 (February 27, 2009), 74 FR 9853 (March 6, 2009) (order approving SR–NYSEALTR–2009–18).

[5] *See* Securities Exchange Act Release No. 58680 (September 29, 2008), 73 FR 58283 (October 6, 2008) (order approving SR–NYSE–2008–76); *see also* Securities Exchange Act Release No. 59011 (November 24, 2008), 73 FR 73360 (December 2, 2008) (order approving SR–NYSE–2008–122); *see also* Securities Exchange Act Release No. 60255 (July 7, 2009), 74 FR 34065 (July 14, 2009) (order approving SR–NYSE–2009–58).

[6] *See* Securities Exchange Act Release No. 62832 (September 2, 2010), 75 FR 55391 (September 10, 2010) (Notice of immediate effectiveness of SR–NYSE–2010–64).

hereby seeks to extend the previously approved pilot period (with the attendant obligations and conditions) for an additional six months, through September 30, 2011.

2. Statutory Basis

The proposed rule change is consistent with Section 6(b) of the Securities Exchange Act of 1934 (the "Act"),[7] in general, and furthers the objectives of Section 6(b)(5),[8] in particular, in that it is designed to prevent fraudulent and manipulative acts and practices, to promote just and equitable principles of trade, to foster cooperation and coordination with persons engaged in facilitating transactions in securities, and to remove impediments to and perfect the mechanism of a free and open market and a national market system. Specifically, the proposed rule change will allow the Exchange to continue receiving inbound routes of equities orders from Arca Securities acting in its capacity as a facility of the NYSE Arca and NYSE Amex, in a manner consistent with prior approvals and established protections. The Exchange believes that extending the previously approved pilot period for six months will permit both the Exchange and the Commission to further assess the impact of the Exchange's authority to receive direct inbound routes of equities orders via Arca Securities (including the attendant obligations and conditions).[9]

B. Self-Regulatory Organization's Statement on Burden on Competition

The Exchange does not believe that the proposed rule change will impose any burden on competition that is not necessary or appropriate in furtherance of the purposes of the Act.

C. Self-Regulatory Organization's Statement on Comments on the Proposed Rule Change Received From Members, Participants, or Others

No written comments were solicited or received with respect to the proposed rule change.

III. Date of Effectiveness of the Proposed Rule Change and Timing for Commission Action

The Exchange has filed the proposed rule change pursuant to Section 19(b)(3)(A)(iii) of the Act[10] and Rule 19b–4(f)(6) thereunder.[11] Because the proposed rule change does not: (i) Significantly affect the protection of investors or the public interest; (ii) impose any significant burden on competition; and (iii) become operative prior to 30 days from the date on which it was filed, or such shorter time as the Commission may designate, if consistent with the protection of investors and the public interest, the proposed rule change has become effective pursuant to Section 19(b)(3)(A) of the Act and Rule 19b–4(f)(6)(iii) thereunder.

A proposed rule change filed under Rule 19b–4(f)(6)[12] normally does not become operative prior to 30 days after the date of the filing. However, pursuant to Rule 19b–4(f)(6)(iii),[13] the Commission may designate a shorter time if such action is consistent with the protection of investors and the public interest.

At any time within 60 days of the filing of such proposed rule change, the Commission summarily may temporarily suspend such rule change if it appears to the Commission that such action is necessary or appropriate in the public interest, for the protection of investors, or otherwise in furtherance of the purposes of the Act.

IV. Solicitation of Comments

Interested persons are invited to submit written data, views, and arguments concerning the foregoing, including whether the proposed rule change is consistent with the Act. Comments may be submitted by any of the following methods:

Electronic Comments

- Use the Commission's Internet comment form (*http://www.sec.gov/rules/sro.shtml*); or
- Send an e-mail to *rule-comments@sec.gov.* Please include File Number SR–NYSE–2011–08 on the subject line.

Paper Comments

- Send paper comments in triplicate to Elizabeth M. Murphy, Secretary, Securities and Exchange Commission, 100 F Street, NE., Washington, DC 20549–1090.

All submissions should refer to File Number SR–NYSE–2011–08. This file number should be included on the subject line if e-mail is used. To help the Commission process and review your comments more efficiently, please use only one method. The Commission will post all comments on the Commission's Internet Web site (*http://www.sec.gov/rules/sro.shtml*). Copies of the submission, all subsequent amendments, all written statements with respect to the proposed rule change that are filed with the Commission, and all written communications relating to the proposed rule change between the Commission and any person, other than those that may be withheld from the public in accordance with the provisions of 5 U.S.C. 552, will be available for Web site viewing and printing in the Commission's Public Reference Room, 100 F Street, NE., Washington, DC 20549, on official business days between the hours of 10 a.m. and 3 p.m. Copies of the filing also will be available for inspection and copying at the principal office of the Exchange. All comments received will be posted without change; the Commission does not edit personal identifying information from submissions. You should submit only information that you wish to make available publicly. All submissions should refer to File Number SR–NYSE–2011–08 and should be submitted on or before March 29, 2011.

For the Commission, by the Division of Trading and Markets, pursuant to delegated authority.[14]

Cathy H. Ahn,

Deputy Secretary.

[FR Doc. 2011–5191 Filed 3–7–11; 8:45 am]

BILLING CODE 8011–01–P

[7] 15 U.S.C. 78f(b).

[8] 15 U.S.C. 78f(b)(5).

[9] The Exchange is currently analyzing the condition regarding non-public information and system changes in order to better reflect the operation of Arca Securities.

[10] 15 U.S.C. 78s(b)(3)(A)(iii).

[11] 17 CFR 240.19b–4(f)(6).

[12] 17 CFR 240.19b–4(f)(6).

[13] 17 CFR 240.19b–4(f)(6)(iii).

[14] 17 CFR 200.30–3(a)(12).

SECURITIES AND EXCHANGE COMMISSION

[Release No. 34–64011; File No. SR–C2–2011–008]

Self-Regulatory Organizations; C2 Options Exchange, Incorporated; Notice of Filing of a Proposed Rule Change To Allow the Listing and Trading of a P.M.-Settled S&P 500 Index Option Product

March 2, 2011.

Pursuant to Section 19(b)(1) of the Securities Exchange Act of 1934 (the "Act"),[1] and Rule 19b–4 thereunder,[2] notice is hereby given that on February 28, 2011, C2 Options Exchange, Incorporated (the "Exchange" or "C2") filed with the Securities and Exchange Commission (the "Commission") the proposed rule change as described in Items I, II, and III below, which Items have been prepared by the Exchange.

[1] 15 U.S.C. 78s(b)(1).

[2] 17 CFR 240.19b–4.

The Commission is publishing this notice to solicit comments on the proposed rule change from interested persons.

I. Self-Regulatory Organization's Statement of the Terms of Substance of the Proposed Rule Change

The Exchange proposes to permit the listing and trading of P.M.-settled S&P 500 Index options on C2. The text of the proposed rule change is available on the Exchange's Web site (*http://www.c2exchange.com*), at the Exchange's Office of the Secretary, and at the Commission.

II. Self-Regulatory Organization's Statement of the Purpose of, and Statutory Basis for, the Proposed Rule Change

In its filing with the Commission, the Exchange included statements concerning the purpose of and basis for the proposed rule change and discussed any comments it received on the proposed rule change. The text of those statements may be examined at the places specified in Item IV below. The Exchange has prepared summaries, set forth in sections A, B, and C below, of the most significant parts of such statements.

A. Self-Regulatory Organization's Statement of the Purpose of, and the Statutory Basis for, the Proposed Rule Change

1. Purpose

The purpose of this rule filing is to permit the listing and trading on C2 of Standard & Poor's 500 Index ("S&P 500") options with third-Friday-of-the-month ("Expiration Friday") expiration dates for which the exercise settlement value will be based on the index value derived from the closing prices of component securities ("P.M.-settled").

To effect the above described change, the Exchange is proposing to add new supplemental provision (a) to C2 Chapter 24 to expressly provide that P.M.-settled S&P 500 options may be listed for trading on C2. Existing C2 rules governing the trading of index options would apply to this new product (*e.g.* trading rules, sales practice rules, margin requirements, and strike price interval requirements).

The S&P 500 is a capitalization-weighted index of 500 stocks from a broad range of industries. The component stocks are weighted according to the total market value of their outstanding shares. The impact of a component's price change is proportional to the issue's total market share value, which is the share price times the number of shares outstanding. These are summed for all 500 stocks and divided by a predetermined base value. The base value for the S&P 500 is adjusted to reflect changes in capitalization resulting from, among other things, mergers, acquisitions, stock rights, and substitutions.

The proposed contract would use a $100 multiplier, and the minimum trading increment would be $0.05 for options trading below $3.00 and $0.10 for all other series. Strike price intervals would be set no less than 5 points apart. Consistent with existing rules for index options, the Exchange would allow up to twelve near-term expiration months, as well as LEAPS.[3] Expiration processing would occur on Saturday following the Expiration Friday. The product would have European-style exercise, and because it is based on the S&P 500 index, there would be no position limits.[4]

C2 notes that ample precedent exists for P.M. settlement of broad-based index options. For example, OEX (an index option contract based on the Standard & Poor's 100 index) has been P.M.-settled since 1983.[5] Also, FLEX Options have P.M. settlements on any expiration day (pursuant to a pilot program).[6] Similarly, CBOE recently established a pilot program that permits P.M.-settled options on broad-based indexes expiring on any Friday of the month, other than the third Friday of the month, as well as the last trading day of the month.[7] CBOE also trades Quarterly Option Series [8] that overlie exchange traded funds or indexes, and Quarterly Index Expirations [9] that are cash-settled options on certain broad-based indexes, both of which expire at the close of business on the last business day of a calendar quarter and are P.M.-settled. CBOE has experience with these special dated options and has not observed any market disruptions resulting from the P.M.-settlement feature of these options.

In addition, the Exchange believes that the reasons supporting the preponderance of A.M.-settlement index options, which date back to the late 1980s/early 1990s for Non-FLEX Options and revolve around a concern about expiration pressure on stock exchanges (more specifically on specialists) at the close, are no longer relevant in today's market. For one, there are multiple primary listing and unlisted trading privilege (UTP) markets for the stocks underlying the index, and trading is widely dispersed among several stock exchanges and alternative trading systems. Many of these markets use closing cross procedures and employ closing order types to facilitate orderly closings.[10] Moreover, today stock order flow is predominantly electronic and the ability to smooth out openings and closings is greatly enhanced and market-on-close procedures work just as well as opening procedures. Thus, the Exchange does not believe that any market disruptions will be encountered with the introduction of P.M.-settled S&P 500 index options.

The Exchange also notes that P.M.-settled options predominate in the OTC market, and C2 is not aware of any adverse effects in the stock market attributable to the P.M.-settlement feature. C2 is merely proposing to offer a P.M.-settled product in an exchange environment which offers the benefit of added transparency, price discovery, and stability.

In response to any potential concerns that disruptive trading conduct could occur as a result of the concurrent listing and trading of two index option products based on the same index but for which different settlement methodologies exist (*i.e.,* one is A.M.-settled and one is P.M.-settled), the Exchange notes that for roughly five years (1987 to 1992) CBOE listed and traded an A.M.-settled S&P 500 index option called NSX at the same time it listed and traded a P.M.-settled S&P 500 index option called SPX and CBOE did not observe any market disruptions as a result of offering both products.

As proposed, the proposal would become effective on a pilot program basis for a period of fourteen months. If the Exchange were to propose an extension of the program or should the Exchange propose to make the program permanent, then the Exchange would submit a filing proposing such amendments to the program. The

[3] Pursuant to CBOE Rule 24.9(b), index LEAPS may expire from 12–60 months from the date of issuance.

[4] There would be reporting requirements pursuant to Rule 4.13, *Reports Related to Position Limits,* and Interpretation and Policy .03 to Rule 24.4, *Position Limits for Broad-Based Index Options,* which sets forth the reporting requirements for certain broad-based indexes that do not have position limits.

[5] The Exchange notes that there are no futures or options on futures traded on the S&P 100 at this time.

[6] *See* Securities Exchange Act Release No. 61439 (January 28, 2010), 75 FR 5831 (February 4, 2010) (SR–CBOE–2009–087) (order approving rule change to establish a pilot program to modify FLEX option exercise settlement values and minimum value sizes). This pilot expires on March 28, 2011.

[7] *See* Rule 24.9(e) and Securities Exchange Act Release No. 62911 (September 14, 2010), 75 FR 57539 (September 21, 2010) (SR–CBOE–2009–075).

[8] *See* Rules 5.5(e) and 24.9(a)(2)(B).

[9] *See* Rule 24.9(c).

[10] For example, *see* Nasdaq Rule 4754 (Nasdaq Closing Cross).

Exchange notes that any positions established under the pilot would not be impacted by the expiration of the pilot. For example, a position in a P.M.-settled series that expires beyond the conclusion of the pilot period could be established during the 14-month pilot. If the pilot program were not extended, then the position could continue to exist. However, the Exchange notes that any further trading in the series would be restricted to transactions where at least one side of the trade is a closing transaction.

As part of the pilot program, the Exchange would also submit a pilot program report to the Commission at least two months prior to the expiration date of the program (the "annual report"). As described below, the annual report would contain an analysis of volume, open interest and trading patterns. The analysis would examine trading in the proposed option product as well as trading in the securities that comprise the S&P 500 index. In addition, for series that exceed certain minimum open interest parameters, the annual report would provide analysis of index price volatility and share trading activity. The annual report would be provided to the Commission on a confidential basis.

The annual report would contain the following volume and open interest data:

(1) Monthly volume aggregated for all trades;

(2) Monthly volume aggregated by expiration date;

(3) Monthly volume for each individual series;

(4) Month-end open interest aggregated for all series;

(5) Month-end open interest for all series aggregated by expiration date; and

(6) Month-end open interest for each individual series.

In addition to the annual report, the Exchange would provide the Commission with interim reports of the information listed in Items (1) through (6) above periodically as required by the Commission while the pilot is in effect. These interim reports would also be provided on a confidential basis. The annual report would also contain the information noted in Items (1) through (6) above for Expiration Friday, A.M.-settled S&P 500 index options traded on CBOE.

In addition, the annual report would contain the following analysis of trading patterns in Expiration Friday, P.M.-settled S&P 500 Index option series in the pilot:

(1) A time series analysis of open interest; and

(2) An analysis of the distribution of trade sizes.

Also, for series that exceed certain minimum parameters, the annual report would contain the following analysis related to index price changes and underlying share trading volume at the close on Expiration Fridays:

(1) A comparison of index price changes at the close of trading on a given Expiration Friday with comparable price changes from a control sample. The data would include a calculation of percentage price changes for various time intervals and compare that information to the respective control sample. Raw percentage price change data as well as percentage price change data normalized for prevailing market volatility, as measured by the CBOE Volatility Index (VIX), would be provided; and

(2) A calculation of share volume for a sample set of the component securities representing an upper limit on share trading that could be attributable to expiring in-the-money series. The data would include a comparison of the calculated share volume for securities in the sample set to the average daily trading volumes of those securities over a sample period. The minimum open interest parameters, control sample, time intervals, method for randomly selecting the component securities, and sample periods would be determined by the Exchange and the Commission.

The Exchange represents that it has sufficient capacity to handle additional traffic associated with this new listing, and that it has in place adequate surveillance procedures to monitor trading in these options thereby helping to ensure the maintenance of a fair and orderly market.

2. Statutory Basis

The Exchange believes the proposed rule change is consistent with the Act [11] and the rules and regulations thereunder and, in particular, the requirements of Section 6(b) of the Act.[12] Specifically, the Exchange believes the proposed rule change is consistent with the Section 6(b)(5) [13] requirements that the rules of an exchange be designed to promote just and equitable principles of trade, to remove impediments to and to perfect the mechanism for a free and open market and a national market system, and, in general, to protect investors and the public interest. The Exchange believes that the introduction of P.M. settlement for the subject index option in the manner proposed does not raise any meaningful regulatory concerns. Further, the Exchange believes that the proposal will not adversely impact fair and orderly markets on expiration Fridays for the underlying stocks comprising the S&P 500 index. As discussed in section (a) of Item 2 of this filing (the purpose section), the handling of orders at the close on the stock markets has matured considerably since concerns were initially raised in the late 1980s. Additionally, the proposed rule change would provide permit holders and investors with additional opportunities to trade S&P 500 options with a P.M. settlement feature in an exchange environment and subject to transparent exchange-based rules, and that investors would also benefit from the opportunity to trade in association with this product on Expiration Fridays thereby removing impediments to a free and open market consistent with the Act.

B. Self-Regulatory Organization's Statement on Burden on Competition

C2 does not believe that the proposed rule change will impose any burden on competition not necessary or appropriate in furtherance of the purposes of the Act.

C. Self-Regulatory Organization's Statement on Comments on the Proposed Rule Change Received From Members, Participants, or Others

No written comments were solicited or received with respect to the proposed rule change.

III. Date of Effectiveness of the Proposed Rule Change and Timing for Commission Action

Within 45 days of the date of publication of this notice in the **Federal Register** or within such longer period (i) as the Commission may designate up to 90 days of such date if it finds such longer period to be appropriate and publishes its reasons for so finding or (ii) as to which the self-regulatory organization consents, the Commission will:

(A) By order approve or disapprove such proposed rule change, or

(B) Institute proceedings to determine whether the proposed rule change should be disapproved.

IV. Solicitation of Comments

Interested persons are invited to submit written data, views, and arguments concerning the foregoing, including whether the proposed rule change is consistent with the Act. Comments may be submitted by any of the following methods:

[11] 15 U.S.C. 78a *et seq.*

[12] 15 U.S.C. 78f(b).

[13] 15 U.S.C. 78f(b)(5).

Electronic Comments

- Use the Commission's Internet comment form (*http://www.sec.gov/rules/sro.shtml*); or
- Send an e-mail to *rule-comments@sec.gov.* Please include File Number SR–C2–2011–008 on the subject line.

Paper Comments

- Send paper comments in triplicate to Secretary, Securities and Exchange Commission, 100 F Street, NE., Washington, DC 20549–1090.

All submissions should refer to File Number SR–C2–2011–008. This file number should be included on the subject line if e-mail is used. To help the Commission process and review your comments more efficiently, please use only one method. The Commission will post all comments on the Commission's Internet Web site (*http://www.sec.gov/rules/sro.shtml*). Copies of the submission, all subsequent amendments, all written statements with respect to the proposed rule change that are filed with the Commission, and all written communications relating to the proposed rule change between the Commission and any person, other than those that may be withheld from the public in accordance with the provisions of 5 U.S.C. 552, will be available for Web site viewing and printing in the Commission's Public Reference Room, 100 F Street, NE., Washington, DC 20549, on official business days between the hours of 10 a.m. and 3 p.m. Copies of such filing also will be available for inspection and copying at the principal office of C2. All comments received will be posted without change; the Commission does not edit personal identifying information from submissions. You should submit only information that you wish to make available publicly. All submissions should refer to File Number SR–C2–2011–008 and should be submitted on or before March 29, 2011.

For the Commission, by the Division of Trading and Markets, pursuant to delegated authority.[14]

Cathy H. Ahn,

Deputy Secretary.

[FR Doc. 2011–5190 Filed 3–7–11; 8:45 am]

BILLING CODE 8011–01–P

[14] 17 CFR 200.30–3(a)(12).

SECURITIES AND EXCHANGE COMMISSION

[Release No. 34–64012; File No. SR–ISE–2011–11]

Self-Regulatory Organizations; International Securities Exchange, LLC; Notice of Filing and Immediate Effectiveness of Proposed Rule Change Relating to a Market Maker Incentive Plan for Foreign Currency Options

March 2, 2011.

Pursuant to Section 19(b)(1) of the Securities Exchange Act of 1934 (the "Act"),[1] and Rule 19b–4 thereunder,[2] notice is hereby given that on February 22, 2011, the International Securities Exchange, LLC (the "Exchange" or the "ISE") filed with the Securities and Exchange Commission ("Commission") the proposed rule change, as described in Items I and II below, which items have been prepared by the self-regulatory organization. The Commission is publishing this notice to solicit comments on the proposed rule change from interested persons.

I. Self-Regulatory Organization's Statement of the Terms of Substance of the Proposed Rule Change

The ISE is proposing to amend its incentive plan for market makers in foreign currency ("FX") options. Specifically, ISE proposes to add six currently listed FX options to the incentive plan. The text of the proposed rule change is available on the Exchange's Web site (*http://www.ise.com*), at the principal office of the Exchange, on the Commission's Web site at *http://www.sec.gov,* and at the Commission's Public Reference Room.

II. Self-Regulatory Organization's Statement of the Purpose of, and Statutory Basis for, the Proposed Rule Change

In its filing with the Commission, the self-regulatory organization included statements concerning the purpose of, and basis for, the proposed rule change and discussed any comments it received on the proposed rule change. The text of these statements may be examined at the places specified in Item IV below. The self-regulatory organization has prepared summaries, set forth in sections A, B and C below, of the most significant aspects of such statements.

[1] 15 U.S.C. 78s(b)(1).

[2] 17 CFR 240.19b–4.

A. Self-Regulatory Organization's Statement of the Purpose of, and Statutory Basis for, the Proposed Rule Change

1. Purpose

The purpose of this proposed rule change is to amend the Exchange's incentive plan for market makers in FX options. The Exchange currently has an incentive plan for FX options that was initially adopted on August 3, 2009 for the following three FX options: the New Zealand dollar ("NZD"), the Mexican peso ("PZO"), the Swedish krona ("SKA").[3] The Exchange subsequently added the Brazilian real ("BRB") to the incentive plan.[4] The Exchange now proposes to add the following FX options to the incentive plan: the Australian dollar ("AUX"), the British pound ("BPX"), the Canadian dollar ("CDD"), the euro ("EUI"), the Japanese yen ("YUK") and the Swiss franc ("SFC").[5] Market makers will be able to enter into the incentive plan until March 31, 2011.[6]

Options on AUX, BPX, CDD, EUI, YUK and SFC began trading on the Exchange on April 17, 2007. Until now, the market maker currently appointed to these FX options has been trading these products without the benefit of the privileges afforded by the incentive plan. The Exchange notes that competition between exchanges that trade like products, in this case, the World Currency Options traded on NASDAQ OMX PHLX, Inc., [sic] has intensified. In order to promote the continued growth and trading in these products, the Exchange now proposes to add AUX, BPX, CDD, EUI, YUK and SFC to the incentive plan, effective March 1, 2011.

Participants in the incentive plan are known on the Exchange's Schedule of Fees as Early Adopter Market Makers. Under the incentive plan, the Exchange waives the applicable transaction fees for both the Early Adopter FXPMM[7]

[3] *See* Securities Exchange Act Release No. 60536 (August 19, 2009) [sic], 74 FR 43204 (August 26, 2009) (SR–ISE–2009–59).

[4] *See* Securities Exchange Act Release No. 61459 (January 19, 2010), 75 FR 6248 (February 8, 2010) (SR–ISE–2010–07).

[5] The Commission previously approved the trading of options on AUX, BPX, CDD, EUI, YUK and SFC. *See* Securities Exchange Act Release No. 55575 (April 3, 2007), 72 FR 17963 (April 10, 2007) (SR–ISE–2006–59).

[6] *See* Securities Exchange Act Release No. 63639 (January 4, 2011), 76 FR 1488 (January 10, 2011) (SR–ISE–2010–121).

[7] A FXPMM is a primary market maker selected by the Exchange that trades and quotes in FX Options only. *See* ISE Rule 2213.

and all Early Adopter FXCMMs[8] that make a market in AUX, BPX, CDD, EUI, YUK and SFC for as long as the incentive plan is in effect. Further, pursuant to a revenue sharing agreement entered into between an Early Adopter Market Maker and ISE, the Exchange pays the Early Adopter FXPMM forty percent (40%) of the transaction fees collected on any customer trade in AUX, BPX, CDD, EUI, YUK and SFC and pays up to ten (10) Early Adopter FXCMMs that participate in the incentive plan twenty percent (20%) of the transaction fees collected for trades between a customer and that FXCMM. Market makers that do not participate in the incentive plan are charged regular transaction fees for trades in these products.

The Exchange currently charges an execution fee of $0.40 per contract for all Public Customer Orders[9] in options on AUX, BPX, CDD, EUI, YUK and SFC.[10] The amount of the execution fee for all Firm Proprietary orders for options on AUX, BPX, CDD, EUI, YUK and SFC is $0.20 per contract and the execution fee for all non-Early Adopter ISE Market Makers in options on AUX, BPX, CDD, EUI, YUK and SFC is equal to the execution fee currently charged by the Exchange for ISE Market Maker orders in equity options.[11] Finally, the amount of the execution fee for all non-ISE Market Maker orders for options on AUX, BPX, CDD, EUI, YUK and SFC is $0.45 per contract.[12] The Exchange does not charge a Payment for Order Flow fee for these products.

The Exchange also proposes to waive transaction charges for all Early Adopter Market Makers in AUX, BPX, CDD, EUI, YUK and SFC in order to further encourage trading in these products. The Exchange believes that the revenue generated from customer, firm proprietary and non-ISE market maker transaction charges and increased order flow will offset the transaction fees that would otherwise be applied to market makers in AUX, BPX, CDD, EUI, YUK and SFC, thereby allowing the Exchange to recoup those fees while increasing order flow and generating increased revenues.

The Exchange believes the proposed rule change will further the Exchange's goal of promoting trading of its FX options through competitive pricing.

2. Statutory Basis

The Exchange believes that the proposed rule change is consistent with the objectives of Section 6 of the Act,[13] in general, and furthers the objectives of Section 6(b)(4),[14] in particular, in that it is designed to provide for the equitable allocation of reasonable dues, fees and other charges among its members and other persons using its facilities. The Exchange believes that extending the incentive plan to options on AUX, BPX, CDD, EUI, YUK and SFC will generate additional order flow in these products to the Exchange.

B. Self-Regulatory Organization's Statement on Burden on Competition

The proposed rule change does not impose any burden on competition that is not necessary or appropriate in furtherance of the purposes of the Act.

C. Self-Regulatory Organization's Statement on Comments on the Proposed Rule Change Received From Members, Participants or Others

The Exchange has not solicited, and does not intend to solicit, comments on this proposed rule change. The Exchange has not received any unsolicited written comments from members or other interested parties.

III. Date of Effectiveness of the Proposed Rule Change and Timing for Commission Action

The foregoing rule change has become effective pursuant to Section 19(b)(3)(A)(ii) of the Act.[15] At any time within 60 days of the filing of such proposed rule change, the Commission summarily may temporarily suspend such rule change if it appears to the Commission that such action is necessary or appropriate in the public interest, for the protection of investors, or otherwise in furtherance of the purposes of the Act. If the Commission takes such action, the Commission shall institute proceedings to determine whether the proposed rule should be approved or disapproved.

IV. Solicitation of Comments

Interested persons are invited to submit written data, views and arguments concerning the foregoing, including whether the proposal is consistent with the Act. Comments may be submitted by any of the following methods:

Electronic Comments

- Use the Commission's Internet comment form (*http://www.sec.gov/rules/sro.shtml*); or
- Send an e-mail to *rule-comments@sec.gov.* Please include File No. SR–ISE-2011–11 on the subject line.

Paper Comments

- Send paper comments in triplicate to Elizabeth M. Murphy, Secretary, Securities and Exchange Commission, 100 F Street, NE., Washington, DC 20549–1090.

All submissions should refer to File No. SR–ISE–2011–11. This file number should be included on the subject line if e-mail is used. To help the Commission process and review your comments more efficiently, please use only one method. The Commission will post all comments on the Commission's Internet Web site (*http://www.sec.gov/rules/sro.shtml*). Copies of the submission, all subsequent amendments, all written statements with respect to the proposed rule change that are filed with the Commission, and all written communications relating to the proposed rule changes between the Commission and any person, other than those that may be withheld from the public in accordance with the provisions of 5 U.S.C. 552, will be available for Web site viewing and printing in the Commission's Public Reference Room, 100 F Street, NE., Washington, DC 20549, on official business days between the hours of 10 a.m. and 3 p.m. Copies of such filing also will be available for inspection and copying at the principal office of ISE. All comments received will be posted without change; the Commission does not edit personal identifying information from submissions. You should submit only information that you wish to make available publicly. All submissions should refer to File No. SR–ISE–2011–11 and should be submitted on or before March 29, 2011.

[8] A FXCMM is a competitive market maker selected by the Exchange that trades and quotes in FX Options only. *See* ISE Rule 2213.

[9] Public Customer Order is defined in Exchange Rule 100(a)(39) as an order for the account of a Public Customer. Public Customer is defined in Exchange Rule 100(a)(38) as a person or entity that is not a broker or dealer in securities.

[10] These fees are will be [sic] charged only to Exchange members.

[11] The Exchange applies a sliding scale, between $0.01 and $0.18 per contract side, based on the number of contracts an ISE market maker trades in a month.

[12] The amount of the execution fee for non-ISE Market Maker transactions executed in the Exchange's Facilitation and Solicitation Mechanisms and for Orders entered into the Price Improvement Mechanism by the member initiating the price improvement order is $0.20 per contract.

[13] 15 U.S.C. 78f(b).

[14] 15 U.S.C. 78f(b)(4).

[15] 15 U.S.C. 78s(b)(3)(A)(ii).

For the Commission, by the Division of Trading and Markets, pursuant to delegated authority.[16]

Cathy H. Ahn,

Deputy Secretary.

[FR Doc. 2011–5186 Filed 3–7–11; 8:45 am]

BILLING CODE 8011–01–P

SECURITIES AND EXCHANGE COMMISSION

[Release No. 34–64010; File No. SR–Phlx–2011–26]

Self-Regulatory Organizations; NASDAQ OMX PHLX LLC; Notice of Filing and Immediate Effectiveness of Proposed Rule Change Relating to Inactive Nominee Fee

March 2, 2011.

Pursuant to Section 19(b)(1) of the Securities Exchange Act of 1934 ("Act"),[1] and Rule 19b–4 thereunder,[2] notice is hereby given that on February 22, 2011, NASDAQ OMX PHLX LLC ("Phlx" or "Exchange") filed with the Securities and Exchange Commission ("SEC" or "Commission") the proposed rule change as described in Items I, II, and III, below, which Items have been prepared by the Exchange. The Commission is publishing this notice to solicit comments on the proposed rule change from interested persons.

I. Self-Regulatory Organization's Statement of the Terms of Substance of the Proposed Rule Change

The Exchange proposes to amend its Fee Schedule to memorialize its Inactive Nominee [3] Fee. The text of the proposed rule change is available on the Exchange's Web site at *http://nasdaqtrader.com/micro.aspx?id=PHLXfilings,* at the principal office of the Exchange, on the Commission's Web site at *http://www.sec.gov,* and at the Commission's Public Reference Room.

II. Self-Regulatory Organization's Statement of the Purpose of, and Statutory Basis for, the Proposed Rule Change

In its filing with the Commission, the Exchange included statements concerning the purpose of and basis for the proposed rule change and discussed any comments it received on the proposed rule change. The text of these statements may be examined at the places specified in Item IV below. The Exchange has prepared summaries, set forth in sections A, B, and C below, of the most significant aspects of such statements.

A. Self-Regulatory Organization's Statement of the Purpose of, and Statutory Basis for, the Proposed Rule Change

1. Purpose

The purpose of the proposed rule change is to memorialize the Inactive Nominee Fee in the Exchange's Fee Schedule.

The Exchange currently assesses a member organization an Inactive Nominee Fee of $500 to maintain an individual's inactive nominee status for a six month period, as provided for in Exchange By-Law Article XII, Section 12–10.[4] The member organization is required to pay a fee for the privilege of maintaining the inactive nominee status of an individual.[5] An inactive nominee's status terminates after six months unless it has been reaffirmed in writing by the Member Organization or is terminated sooner.[6] An inactive nominee is assessed the $500 fee every time the status is reaffirmed.[7]

The Exchange has assessed the Inactive Nominee Fee of $500 since the inception of the inactive nominee category.[8] This fee was administered pursuant to By-Law Article XII, Section 12–10, and never appeared in the Exchange's Fee Schedule. In recent years, the Exchange has memorialized additional fees within the Fee Schedule to create a centralized location for fees. The Exchange desires to memorialize this fee in the Fee Schedule and to make clear which membership fees an Inactive Nominee Fee [sic] would be assessed and when an inactive nominee would be assessed such fees by adding explanatory text to the Fee Schedule.

2. Statutory Basis

The Exchange believes that its proposal to amend its Fee Schedule is consistent with Section 6(b) of the Act [9] in general, and furthers the objectives of Section 6(b)(4) of the Act [10] in particular, in that it is an equitable allocation of reasonable fees and other charges among Exchange members and other persons using its facilities.

The Exchange believes that it is reasonable to memorialize the Inactive Nominee Fee on the Exchange's Fee Schedule so the fee is transparent to all members. While the Exchange has been assessing the Inactive Nominee Fee since 1998, the fee was administered pursuant to By-Law Article XII, Section 12–10 and was not located on the Fee Schedule. The Exchange believes that placing the fee on the Fee Schedule would summarize all the membership fees in one location and clarify all the fees an individual is subject to for the privilege of maintain [sic] an inactive nominee status.

The Exchange believes that it is equitable to place the Inactive Nominee Fee on the Fee Schedule because it uniformly impacts all inactive nominees as they are all subject to the Inactive Nominee Fee.

B. Self-Regulatory Organization's Statement on Burden on Competition

The Exchange does not believe that the proposed rule change will impose any burden on competition not necessary or appropriate in furtherance of the purposes of the Act.

---

[16] 17 CFR 200.30–3(a)(12).

[1] 15 U.S.C. 78s(b)(1).

[2] 17 CFR 240.19b–4.

[3] The term "inactive nominee" means a natural person associated with and designated as such by a member organization and who has been approved for such status and is registered as such with the Membership Department. An inactive nominee shall have no rights or privileges under a permit unless and until said inactive nominee becomes admitted as a member of the Exchange pursuant to the By-Laws and Rules of the Exchange. An inactive nominee merely stands ready to exercise rights under a permit upon notice by the member organization to the Membership Department on an expedited basis. *See* Exchange Rule 1(i).

[4] Pursuant to Exchange By-Law Article XII, Section 12–10, a member organization may designate an individual as an inactive nominee. To be eligible to be an inactive nominee an individual must be approved as eligible to hold a permit in accordance with the Exchange's By-Laws and Rules. An inactive nominee has no rights and privileges of a permit holder until the inactive nominee becomes an effective permit holder and all applicable Exchange fees are paid. *See* By-Law Article XII, Section 12–10.

[5] *See* Securities Exchange Act Release No. 39851 (April 10, 1998), 63 FR 19282 (April 17, 1998) (SR–Phlx–97–35) (a rule change which subjected inactive nominees to the membership application process, including fees, including a fee for the privilege of maintaining an inactive nominee status).

[6] *See* By-Law Article XII, Section 12–10.

[7] An inactive nominee is also assessed the Application and Initiation Fees when such person applies to be an inactive nominee. Such fees are reassessed if there is a lapse in the inactive nominee's membership status. However, an inactive nominee would not be assessed the Application and Initiation Fees if such inactive nominee applied for membership without a lapse in that individual's association with a particular member organization. *See* Securities Exchange Act Release No. 63780 (January 26, 2011), 76 FR 5846 (February 2, 2011) (SR–Phlx–2011–07). *See also* By-Law Article XII, Section 12–10.

[8] Originally, the inactive nominee was defined in Exchange Rule 21, but the definition was later moved to the definitions section in Rule 1.

[9] 15 U.S.C. 78f(b).

[10] 15 U.S.C. 78f(b)(4).

C. Self-Regulatory Organization's Statement on Comments on the Proposed Rule Change Received From Members, Participants, or Others

No written comments were either solicited or received.

III. Date of Effectiveness of the Proposed Rule Change and Timing for Commission Action

The foregoing rule change has become effective pursuant to Section 19(b)(3)(A)(ii) of the Act.[11] At any time within 60 days of the filing of the proposed rule change, the Commission summarily may temporarily suspend such rule change if it appears to the Commission that such action is necessary or appropriate in the public interest, for the protection of investors, or otherwise in furtherance of the purposes of the Act. If the Commission takes such action, the Commission shall institute proceedings to determine whether the proposed rule should be approved or disapproved.

IV. Solicitation of Comments

Interested persons are invited to submit written data, views, and arguments concerning the foregoing, including whether the proposed rule change is consistent with the Act. Comments may be submitted by any of the following methods:

Electronic Comments

- Use the Commission's Internet comment form (*http://www.sec.gov/rules/sro.shtml*); or
- Send an e-mail to *rule-comments@sec.gov*. Please include File Number SR–Phlx–2011–26 on the subject line.

Paper Comments

- Send paper comments in triplicate to Elizabeth M. Murphy, Secretary, Securities and Exchange Commission, 100 F Street, NE., Washington, DC 20549–1090.

All submissions should refer to File Number SR–Phlx–2011–26. This file number should be included on the subject line if e-mail is used. To help the Commission process and review your comments more efficiently, please use only one method. The Commission will post all comments on the Commission's Internet Web site (*http://www.sec.gov/rules/sro.shtml*). Copies of the submission, all subsequent amendments, all written statements with respect to the proposed rule change that are filed with the Commission, and all written communications relating to the proposed rule change between the Commission and any person, other than those that may be withheld from the public in accordance with the provisions of 5 U.S.C. 552, will be available for Web site viewing and printing in the Commission's Public Reference Room, 100 F Street, NE., Washington, DC 20549, on official business days between the hours of 10 a.m. and 3 p.m. Copies of such filing also will be available for inspection and copying at the principal office of the Exchange. All comments received will be posted without change; the Commission does not edit personal identifying information from submissions. You should submit only information that you wish to make available publicly. All submissions should refer to File Number SR–Phlx–2011–26 and should be submitted on or before March 29, 2011.

For the Commission, by the Division of Trading and Markets, pursuant to delegated authority.[12]

Cathy H. Ahn,

Deputy Secretary.

[FR Doc. 2011–5142 Filed 3–7–11; 8:45 am]

BILLING CODE 8011–01–P

[11] 15 U.S.C. 78s(b)(3)(A)(ii).

[12] 17 CFR 200.30–3(a)(12).

SECURITIES AND EXCHANGE COMMISSION

[Release No. 34–64006; File No. SR–MSRB–2011–01]

Self-Regulatory Organizations; Municipal Securities Rulemaking Board; Notice of Filing and Immediate Effectiveness of Amended and Restated Articles of Incorporation of Municipal Securities Rulemaking Board

March 2, 2011.

Pursuant to Section 19(b)(1) of the Securities Exchange Act of 1934 [1] and Rule 19b–4 thereunder,[2] notice is hereby given that on February 18, 2011, the Municipal Securities Rulemaking Board ("Board" or "MSRB") filed with the Securities and Exchange Commission ("SEC" or "Commission") the proposed rule change as described in Items I, II, and III below, which Items have been prepared by the MSRB. The MSRB has filed the proposal as a "non-controversial" rule change pursuant to Section 19(b)(3)(A)(iii),[3] and Rule 19b–4(f)(6) thereunder,[4] which renders the proposal effective upon filing with the Commission. The Commission is publishing this notice to solicit comments on the proposed rule change from interested persons.

I. Self-Regulatory Organization's Statement of the Terms of Substance of the Proposed Rule Change

The MSRB is filing with the SEC a proposed rule change consisting of an Amended and Restated Articles of Incorporation.

The text of the proposed rule change is available on the MSRB's Web site at *http://www.msrb.org/Rules-and-Interpretations/SEC–Filings/2011–Filings.aspx,* at the MSRB's principal office, and at the Commission's Public Reference Room.

II. Self-Regulatory Organization's Statement of the Purpose of, and Statutory Basis for, the Proposed Rule Change

In its filing with the Commission, the MSRB included statements concerning the purpose of and basis for the proposed rule change and discussed any comments it received on the proposed rule change. The text of these statements may be examined at the places specified in Item IV below. The Board has prepared summaries, set forth in Sections A, B, and C below, of the most significant aspects of such statements.

A. Self-Regulatory Organization's Statement of the Purpose of, and Statutory Basis for, the Proposed Rule Change

1. Purpose

The purpose of the proposed rule change is to make changes to the Articles of Incorporation as are necessary and appropriate in order to comply with Section 15B of the Securities Exchange Act of 1934, 15 U.S.C. 78o–4, as amended by the Dodd-Frank Wall Street Reform and Consumer Protection Act, Public Law 111–203, § 975, 124 Stat. 1376 (2010) (the "Dodd-Frank Act"), and MSRB transitional Rule A–3(i). The MSRB established transitional Rule A–3(i) in order to comply with the Dodd-Frank Act. The transitional rule sets forth a two-year transitional period, commencing on October 1, 2010 and concluding on September 30, 2012. During this transitional period, the MSRB will maintain a Board of Directors of 21 members, including 11 public members and 10 members representing MSRB-regulated entities. The proposed amendments to the Articles of Incorporation provide that the new Board of Director class that will commence service on October 1, 2011,

[1] 15 U.S.C. 78s(b)(1).

[2] 17 CFR 240.19b–4.

[3] 15 U.S.C. 78s(b)(3)(A)(iii).

[4] 17 CFR 240.19b–4(f)(6).

shall consist of five members who will serve three-year terms.

2. Statutory Basis

The MSRB believes that the proposed rule change is consistent with Section 15B(b) of the Securities Exchange Act of 1934 (the "Act"),[5] as amended by the Dodd-Frank Act, in that it conforms the Articles of Incorporation of the Board to the requirements of the Dodd-Frank Act and MSRB transitional Rule A–3(i).

B. Self-Regulatory Organization's Statement on Burden on Competition

The MSRB does not believe that the proposed rule change will impose any burden on competition not necessary or appropriate in furtherance of the purposes of the Act, since the proposed rule change simply amends the Articles of Incorporation of the Board to comply with the requirements of the Dodd-Frank Act and MSRB transitional Rule A–3(i), and solely concerns the administration of the organization.

C. Self-Regulatory Organization's Statement on Comments on the Proposed Rule Change Received From Members, Participants, or Others

Written comments were neither solicited nor received on the proposed rule change.

III. Date of Effectiveness of the Proposed Rule Change and Timing for Commission Action

The MSRB represented that the proposed rule change qualifies for immediate effectiveness pursuant to Section 19(b)(3)(A)(iii) of the Act[6] because it: (i) Does not significantly affect the protection of investors or the public interest; (ii) does not impose any significant burden on competition; and (iii) does not become operative for 30 days after filing or such shorter time as the Commission may designate consistent with the protection of investors and the public interest.[7] The MSRB provided the required written notice of its intention to file the proposed rule change to the Commission on February 10, 2011, and the proposed rule change will become operative on April 1, 2011, which is more than 30 days after the filing of the proposed rule change.

At any time within 60 days of the filing of the proposed rule change, the Commission summarily may temporarily suspend such rule change if it appears to the Commission that such action is necessary or appropriate in the public interest, for the protection of investors, or otherwise in furtherance of the purposes of the Act.[8]

IV. Solicitation of Comments

Interested persons are invited to submit written data, views, and arguments concerning the foregoing, including whether the proposed rule change is consistent with the Act. Comments may be submitted by any of the following methods:

Electronic Comments

- Use the Commission's Internet comment form (*http://www.sec.gov/rules/sro.shtml);* or
- Send an e-mail to *rule-comments@sec.gov*. Please include File Number SR–MSRB–2011–01 on the subject line.

Paper Comments

- Send paper comments in triplicate to Elizabeth M. Murphy, Secretary, Securities and Exchange Commission, 100 F Street, NE., Washington, DC 20549–1090.

All submissions should refer to File Number SR–MSRB–2011–01. This file number should be included on the subject line if e-mail is used. To help the Commission process and review your comments more efficiently, please use only one method. The Commission will post all comments on the Commission's Web site (*http://www.sec.gov/rules/sro.shtml).* Copies of the submission, all subsequent amendments, all written statements with respect to the proposed rule change that are filed with the Commission, and all written communications relating to the proposed rule change between the Commission and any person, other than those that may be withheld from the public in accordance with the provisions of 5 U.S.C. 552, will be available for Web site viewing and printing in the Commission's Public Reference Room, 100 F Street, NE., Washington, DC 20549, on official business days between the hours of 10 a.m. and 3 p.m. Copies of such filing also will be available for inspection and copying at the MSRB's offices.

All comments received will be posted without change; the Commission does not edit personal identifying information from submissions. You should submit only information that you wish to make available publicly. All submissions should refer to File Number SR–MSRB–2011–01 and should be submitted on or before March 29, 2011.

For the Commission, by the Division of Trading and Markets, pursuant to delegated authority.[9]

Cathy H. Ahn,

Deputy Secretary.

[FR Doc. 2011–5140 Filed 3–7–11; 8:45 am]

BILLING CODE 8011–01–P

[5] 15 U.S.C. 78o–4(b).

[6] 15 U.S.C. 78s(b)(3)(A)(iii).

[7] In addition, Rule 19b–4(f)(6)(iii) requires a self-regulatory organization to give the Commission written notice of its intent to file the proposed rule change at least five business days prior to the date of filing of the proposed rule change, or such shorter time as designated by the Commission.

[8] *See* Section 19(b)(3)(C) of the Act, 15 U.S.C. 78s(b)(3)(C).

[9] 17 CFR 200.30–3(a)(12).

SECURITIES AND EXCHANGE COMMISSION

[Release No. 34–64004; File No. SR–FICC–2011–02]

Self-Regulatory Organizations; The Fixed Income Clearing Corporation; Notice of Filing and Immediate Effectiveness of Proposed Rule Change To Make a Technical, Clarifying Change to the Corporation Default Rule of the Government Securities Division

March 2, 2011.

Pursuant to Section 19(b)(1) of the Securities Exchange Act of 1934 ("Act"),[1] notice is hereby given that on February 17, 2011, The Fixed Income Clearing Corporation ("FICC") filed with the Securities and Exchange Commission ("Commission") the proposed rule change described in Items I and II below, which Items have been prepared primarily by FICC. FICC filed the proposal pursuant to Section 19(b)(3)(A)(i) of the Act[2] and Rule 19b–4(f)(1)[3] thereunder so that the proposal was effective upon filing with the Commission. The Commission is publishing this notice to solicit comments on the rule change from interested parties.

I. Self-Regulatory Organization's Statement of the Terms of Substance of the Proposed Rule Change

The proposed rule change will make a technical, clarifying change to the Corporation Default Rule of the Government Securities Division ("GSD").

II. Self-Regulatory Organization's Statement of the Purpose of, and Statutory Basis for, the Proposed Rule Change

In its filing with the Commission, FICC included statements concerning the purpose of and basis for the proposed rule change and discussed any

[1] 15 U.S.C. 78s(b)(1).

[2] 15 U.S.C. 78s(b)(3)(A)(i).

[3] 17 CFR 240.19b–4(f)(1).

comments it received on the proposed rule change. The text of these statements may be examined at the places specified in Item IV below. FICC has prepared summaries, set forth in sections (A), (B), and (C) below, of the most significant aspects of these statements.[4]

(A) Self-Regulatory Organization's Statement of the Purpose of, and Statutory Basis for, the Proposed Rule Change

The purpose of this rule change is to make a technical, clarifying change to GSD Rule 22B, entitled "Corporation Default" ("Corporation Default Rule"). FICC adopted the Corporation Default Rule to make explicit the close-out netting that would be applied to obligations between FICC and its members in the event that FICC becomes insolvent or defaults in its obligations to its members.[5] By way of background, FICC had been approached by some of its dealer members that had requested that FICC add a provision to the rules of the GSD to make explicit the close-out netting of obligations between FICC and its members in the unlikely event that FICC becomes insolvent or defaults on its obligations to its members. The members stated that the adoption of the Corporation Default Rule would provide clarity in their application of balance sheet netting to their positions with FICC under U.S. GAAP in accordance with the criteria specified in the Financial Accounting Standards Board's Interpretation No. 39, "Offsetting of Amounts Related to Certain Contracts" (FIN 39). The members further stated that the Corporation Default Rule would allow them to comply with Basel Accord Standards relating to netting. Specifically, firms are able to calculate their capital requirements on the basis of their net credit exposure where they have legally enforceable netting arrangements with their counterparties, which includes a close-out netting provision in the event of the default of the counterparty (in this case, the division of FICC acting as a CCP).

The proposed technical change adds a sentence to the Corporation Default Rule that reads as follows: "For purposes of this Rule 22B and notwithstanding any other provision to the contrary, Novation is deemed to occur and Deliver Obligations and Receive Obligations established with respect to all Transactions at the time at which the data submitted in respect of such Transactions is compared and constitutes a Compared Trade." For purposes of clarity, this sentence brings into Rule 22B, existing language of other provisions of the GSD's Rules. For example, GSD Rule 11B ("Guaranty of Settlement") provides that FICC shall guarantee the settlement of a trade at the time at which the comparison of such trade occurs pursuant to the FICC's comparison rules and that FICC's guaranty means FICC's obligation to novate the deliver, receive, and payment obligations that were created by the trade. The addition of the proposed sentence in the Corporation Default Rule clarifies that trades that have been compared and therefore guaranteed by the GSD shall be deemed novated at the time of comparison for purposes of Rule 22B and therefore included in the close-out netting calculation that would be performed in the event of an FICC default pursuant to Rule 22B.

FICC believes that the proposed rule change is consistent with the requirements of Section 17A of the Act[6] and the rules and regulations thereunder applicable to FICC because it provides members with further clarity with respect to the Corporation Default Rule and net credit exposure where members have legally enforceable netting arrangements with their counterparties.

(B) Self-Regulatory Organization's Statement on Burden on Competition

FICC does not believe that the proposed rule change will have any impact or impose any burden on competition.

(C) Self-Regulatory Organization's Statement on Comments on the Proposed Rule Change Received From Members, Participants, or Others

Written comments relating to the proposed rule change have not been solicited or received. FICC will notify the Commission of any written comments received by FICC.

III. Date of Effectiveness of the Proposed Rule Change and Timing for Commission Action

The foregoing proposed rule change has become effective upon filing pursuant to Section 19(b)(3)(A)(i) of the Act[7] and Rule 19b–4(f)(1)[8] thereunder because the proposed rule change constitutes a stated policy, practice, or interpretation with respect to the meaning, administration, or enforcement of an existing rule. At any time within 60 days of the filing of the proposed rule change, the Commission summarily may temporarily suspend such rule change if it appears to the Commission that such action is necessary or appropriate in the public interest, for the protection of investors, or otherwise in furtherance of the purposes of the Act.

IV. Solicitation of Comments

Interested persons are invited to submit written data, views, and arguments concerning the foregoing, including whether the proposed rule change is consistent with the Act. Comments may be submitted by any of the following methods:

Electronic Comments

- Use the Commission's Internet comment form (*http://www.sec.gov/rules/sro.shtml*); or
- Send an e-mail to *rule-comments@sec.gov*. Please include File Number SR–FICC–2011–02 on the subject line.

Paper Comments

- Send paper comments in triplicate to Elizabeth M. Murphy, Secretary, Securities and Exchange Commission, 100 F Street, NE., Washington, DC 20549–1090.

All submissions should refer to File Number SR–FICC–2011–02. This file number should be included on the subject line if e-mail is used. To help the Commission process and review your comments more efficiently, please use only one method. The Commission will post all comments on the Commission's Internet Web site (*http://www.sec.gov/rules/sro.shtml*). Copies of the submission, all subsequent amendments, all written statements with respect to the proposed rule change that are filed with the Commission, and all written communications relating to the proposed rule change between the Commission and any person, other than those that may be withheld from the public in accordance with the provisions of 5 U.S.C. 552, will be available for Web site viewing and printing in the Commission's Public Reference Room, 100 F Street, NE., Washington, DC 20549, on official business days between the hours of 10 a.m. and 3 p.m. Copies of such filings also will be available for inspection and copying at the principal office of FICC and on FICC's Web site at *http://www.dtcc.com/downloads/legal/rule_filings/2011/ficc/2011–02.pdf*. All comments received will be posted without change; the Commission does not edit personal identifying

[4] The Commission has modified the text of the summaries prepared by FICC.

[5] SEC Release No. 34–63038, File No. SR–FICC–2010–04 (October 5, 2010).

[6] 15 U.S.C. 78q–1.

[7] 15 U.S.C. 78s(b)(3)(A)(i).

[8] 17 CFR 240.19b–4(f)(1).

information from submissions. You should submit only information that you wish to make available publicly. All submissions should refer to File Number SR–FICC–2011–02 and should be submitted on or before March 29, 2011.

For the Commission, by the Division of Trading and Markets, pursuant to delegated authority.[9]

Cathy H. Ahn,

Deputy Secretary.

[FR Doc. 2011–5138 Filed 3–7–11; 8:45 am]

BILLING CODE 8011–01–P

SECURITIES AND EXCHANGE COMMISSION

[Release No. 34–64003; File No. SR–NASDAQ–2011–028]

Self-Regulatory Organizations; The NASDAQ Stock Market LLC; Notice of Filing and Immediate Effectiveness of Proposed Rule Change To Modify Fees for Members Using the NASDAQ Market Center

March 2, 2011.

Pursuant to Section 19(b)(1) of the Securities Exchange Act of 1934 ("Act")[1] and Rule 19b–4 thereunder,[2] notice is hereby given that, on February 22, 2011, The NASDAQ Stock Market LLC (the "Exchange" or "NASDAQ") filed with the Securities and Exchange Commission (the "Commission") the proposed rule change as described in Items I, II, and III below, which Items have been prepared by NASDAQ. The Commission is publishing this notice to solicit comments on the proposed rule change from interested persons.

I. Self-Regulatory Organization's Statement of the Terms of Substance of the Proposed Rule Change

NASDAQ proposes to modify pricing for NASDAQ members using the NASDAQ Market Center. NASDAQ will implement the proposed change on March 1, 2011. The text of the proposed rule change is available at *http://nasdaq.cchwallstreet.com/*, at NASDAQ's principal office, and at the Commission's Public Reference Room.

II. Self-Regulatory Organization's Statement of the Purpose of, and Statutory Basis for, the Proposed Rule Change

In its filing with the Commission, NASDAQ included statements concerning the purpose of and basis for the proposed rule change and discussed any comments it received on the proposed rule change. The text of these statements may be examined at the places specified in Item IV below. NASDAQ has prepared summaries, set forth in Sections A, B, and C below, of the most significant aspects of such statements.

A. Self-Regulatory Organization's Statement of the Purpose of, and the Statutory Basis for, the Proposed Rule Change

1. Purpose

NASDAQ is amending Rule 7018 to make modifications to its pricing schedule for execution of orders through the NASDAQ Market Center. NASDAQ offers a credit to liquidity providers, with the size of the credit varying based on overall monthly volumes of liquidity provision. Currently, the highest credit is $0.00295 per share executed for displayed liquidity and $0.0015 per share executed for non-displayed liquidity. The availability of this credit level is based on volume of liquidity provision during a month, with the required volume adjusted each month in accordance with a sliding scale that takes account of overall market volumes during the month. Specifically, a member qualifies for the highest credit if it has an average daily volume through the NASDAQ Market Center in all securities during the month of: (i) More than 95 million shares of liquidity provided, if average total consolidated volume reported to all consolidated transaction reporting plans by all exchanges and trade reporting facilities is more than 10 billion shares per day during the month; (ii) more than 85 million shares of liquidity provided, if average total consolidated volume is between 9,000,000,001 and 10 billion shares per day during the month; (iii) more than 75 million shares of liquidity provided, if average total consolidated volume is between 8,000,000,001 and 9 billion shares per day during the month; and (iv) more than 65 million shares of liquidity provided, if average total consolidated volume is 8 billion or fewer shares per day during the month.

Effective March 1, 2011, NASDAQ will modify the conditions for qualifying for this rebate tier by stipulating that a member must achieve the requisite volume levels through a single market participant identifier ("MPIDs").[3] An MPID is a four-letter code used by a member to categorize its trading activity for a specific purpose. All members have at least one MPID, but a member may request the assignment of additional MPIDs. For example, a member may conduct market making activity through one MPID, while using a second MPID for trading on behalf of institutional customers. In addition, certain members aggregate the trading activity of several firms under their own membership rubric, for the purposes of obtaining more favorable pricing, but will generally acquire a separate MPID for each firm that they aggregate, so as to distinguish the trading activity of one firm from another. NASDAQ has concluded that its most favorable rebate tier should be paid to those firms that do the most to enhance NASDAQ's market quality through unified management of a high volume of quotes/orders. NASDAQ also wishes to ensure that its fee schedule does not provide excessive encouragement to members to aggregate the activity of several firms (some of whom may not themselves be members of the exchange) for the sole purpose of earning a higher rebate. Thus, a member or a sponsored non-member that is not able to achieve the requisite level of liquidity provision will not be able to meet the threshold by coordinating and consolidating with the trading activity of other firms using multiple MPIDs.

NASDAQ notes, however, that the impact of the change on firms that currently qualify for the most favorable rebate rate but that are not able to achieve the required volume thresholds through a single MPID is mitigated by the fact that qualification for other rebate tiers may continue to be achieved through one or more MPIDs. Notably, members that provide a daily average of more than 35 million shares of liquidity during the month through one or more MPIDs are eligible to receive a rebate of $0.0029 per share executed for displayed liquidity and $0.0015 per share executed for non-displayed liquidity (versus the top rebate of $0.00295 per share executed for displayed liquidity and $0.0015 per share executed for non-displayed liquidity).

Separately, NASDAQ currently offers a rebate of $0.0029 per share executed for displayed liquidity and $0.0015 per share executed for non-displayed in circumstances where a market participant achieves certain specified levels of activity in both the NASDAQ Market Center and the NASDAQ Options Market. Currently, the required levels of monthly activity are an average daily volume of more than 25 million shares of liquidity provided through the NASDAQ Market Center and an average daily volume of more than 200,000

[9] 17 CFR 200.30–3(a)(12).

[1] 15 U.S.C. 78s(b)(1).

[2] 17 CFR 240.19b–4.

[3] A member achieving the requisite level through one MPID would be eligible to receive the higher credit with respect to trading activity through its other MPIDs as well.

options contracts accessed through the NASDAQ Options Market. NASDAQ has determined that broadening the availability of this tier to encourage and reward active participation in both of its markets has the potential to enhance market quality and will recognize the increase [sic] prevalence of members that are active on both markets. Accordingly, NASDAQ is reducing the required level of activity on the NASDAQ Market Center to an average daily volume of more than 10 million shares of liquidity provided, while setting the required volume of activity on the NASDAQ Options Market at more than 130,000 options contracts accessed or provided through the NASDAQ Options Market.

NASDAQ is also making several non-substantive amendments to Rule 7018 to clarify where required volume levels may continue to be achieved through one or more MPIDs, and is also making several minor formatting changes to the rule text.

2. Statutory Basis

NASDAQ believes that the proposed rule change is consistent with the provisions of Section 6 of the Act,[4] in general, and with Section 6(b)(4) of the Act,[5] in particular, in that it provides for the equitable allocation of reasonable dues, fees and other charges among members and issuers and other persons using any facility or system which NASDAQ operates or controls. First, all similarly situated members will be subject to the same fee structure, and access to NASDAQ is offered on fair and non-discriminatory terms. Moreover, NASDAQ believes that it is reasonable and equitable to stipulate that members qualifying for NASDAQ's most favorable liquidity rebate tier must achieve requisite volume thresholds through a single MPID, thereby enhancing market quality through unified management of the member's quotes and orders and discouraging aggregation arrangements that exist solely for pricing reasons. Specifically, liquidity provider rebate tiers exist to enhance market quality by encouraging participants to post large numbers of quotes/orders on a particular venue and thereby allow the exchange to serve a robust price discovery function and absorb larger volumes of incoming orders at a given price. NASDAQ believes that it is reasonable and equitable to offer its highest rebate tier to firms that provide volume through a single MPID, because NASDAQ believes that such firms are most likely to provide consistent liquidity during periods of market stress and to manage their quotes/orders in a coordinated manner that promotes price discovery and market stability.

NASDAQ further believes that it is less equitable to pay a high rebate to a member that aggregates the activity of multiple smaller firms, since the higher rebate is not being paid with respect to the active quote/order management of a particular market maker or active liquidity provider, but rather simply due to the member's willingness to allow other members and sponsored participants to channel low volumes of quote/order activity through another member. Accordingly, NASDAQ believes that the proposal is not unreasonably discriminatory because it is consistent with the overall goals of enhancing market quality that undergird the liquidity provider rebate. Finally, NASDAQ notes that firms no longer eligible for the highest rebate tier would remain eligible for a rebate tier that is identical with respect to non-displayed liquidity and only $0.00005 per share executed lower with respect to displayed liquidity.

NASDAQ further notes that it operates in a highly competitive market in which market participants can readily favor competing venues if they deem fee levels at a particular venue to be excessive. In particular, because many other trading venues do not stipulate that volume thresholds must be achieved through a single MPID, market participants that currently receive the highest rebate but that will be unable to do so in the future may readily favor competing venues in an effort to receive more favorable pricing.

With respect to its pricing change for members active on both the NASDAQ Market Center and the NASDAQ Options Market, NASDAQ noted in its prior filing to establish a rebate tier focused on such members that the tier is responsive to the convergence of trading in which members simultaneously trade different asset classes within a single strategy.[6] Thus, to the extent that a member decreases volume in cash equities while trading higher volumes of options, the tier recognizes that the member nevertheless remains an active member of the NASDAQ Stock Market and should remain eligible for pricing discounts that recognize the overall volume of its activity. NASDAQ also notes that cash equities and options markets are linked, with liquidity and trading patterns on one market affecting those on the other. Accordingly, the tier recognizes that activity in the options markets also supports price discovery and liquidity provision in the NASDAQ Market Center.

After over one year of experience with the existing pricing tier, however, NASDAQ has concluded that the level of the activity required to qualify for the tier was not low enough to provide the benefit to an appropriately wide range of members that are active in both the NASDAQ Market Center and the NASDAQ Options Market. Accordingly, NASDAQ has decided to lower the required thresholds so as to make the associated discount more widely available.

NASDAQ further notes, however, that the tier is one of several means of qualifying for the rebate levels associated with the tier, and that the other means do not require any activity on the NASDAQ Options Market. Accordingly, NASDAQ believes that the tier and the proposed change in required levels of activity are not unreasonably discriminatory.

B. Self-Regulatory Organization's Statement on Burden on Competition

NASDAQ does not believe that the proposed rule change will result in any burden on competition that is not necessary or appropriate in furtherance of the purposes of the Act, as amended. Because the market for order execution and routing is extremely competitive, members may readily opt to disfavor NASDAQ's execution services if they believe that alternatives offer them better value. Accordingly, NASDAQ does not believe that the proposed changes will impair the ability of members or competing order execution venues to maintain their competitive standing in the financial markets.

C. Self-Regulatory Organization's Statement on Comments on the Proposed Rule Change Received From Members, Participants, or Others

Written comments were neither solicited nor received.

III. Date of Effectiveness of the Proposed Rule Change and Timing for Commission Action

The foregoing rule change has become effective pursuant to Section 19(b)(3)(A)(ii) of the Act.[7] At any time within 60 days of the filing of the proposed rule change, the Commission summarily may temporarily suspend such rule change if it appears to the Commission that such action is necessary or appropriate in the public

[4] 15 U.S.C. 78f.

[5] 15 U.S.C. 78f(b)(4).

[6] Securities Exchange Act Release No. 59879 (May 6, 2009), 74 FR 22619 (May 13, 2009) (SR–NASDAQ–2009–041).

[7] 15 U.S.C. 78s(b)(3)(a)(ii).

interest, for the protection of investors, or otherwise in furtherance of the purposes of the Act. If the Commission takes such action, the Commission shall institute proceedings to determine whether the proposed rule should be approved or disapproved.

IV. Solicitation of Comments

Interested persons are invited to submit written data, views, and arguments concerning the foregoing, including whether the proposed rule change is consistent with the Act. Comments may be submitted by any of the following methods:

Electronic Comments

- Use the Commission's Internet comment form (*http://www.sec.gov/rules/sro.shtml);* or
- Send an e-mail to *rule-comments@sec.gov.* Please include File Number SR–NASDAQ–2011–028 on the subject line.

Paper Comments

- Send paper comments in triplicate to Elizabeth M. Murphy, Secretary, Securities and Exchange Commission, 100 F Street, NE., Washington, DC 20549–1090.

All submissions should refer to File Number SR–NASDAQ–2011–028. This file number should be included on the subject line if e-mail is used. To help the Commission process and review your comments more efficiently, please use only one method. The Commission will post all comments on the Commission's Internet Web site (*http://www.sec.gov/rules/sro.shtml).* Copies of the submission, all subsequent amendments, all written statements with respect to the proposed rule change that are filed with the Commission, and all written communications relating to the proposed rule change between the Commission and any person, other than those that may be withheld from the public in accordance with the provisions of 5 U.S.C. 552, will be available for Web site viewing and printing in the Commission's Public Reference Room, 100 F Street, NE., Washington, DC 20549, on official business days between the hours of 10 a.m. and 3 p.m. Copies of the filing also will be available for inspection and copying at the principal office of the Exchange. All comments received will be posted without change; the Commission does not edit personal identifying information from submissions. You should submit only information that you wish to make available publicly. All submissions should refer to File Number SR–NASDAQ–2011–028 and should be submitted on or before March 29, 2011.

For the Commission, by the Division of Trading and Markets, pursuant to delegated authority.[8]

Cathy H. Ahn,

Deputy Secretary.

[FR Doc. 2011–5137 Filed 3–7–11; 8:45 am]

BILLING CODE 8011–01–P

[8] 17 CFR 200.30–3(a)(12).

DEPARTMENT OF STATE

[Public Notice: 7358]

Culturally Significant Objects Imported for Exhibition Determinations: "Double Sexus"

SUMMARY: Notice is hereby given of the following determinations: Pursuant to the authority vested in me by the Act of October 19, 1965 (79 Stat. 985; 22 U.S.C. 2459), Executive Order 12047 of March 27, 1978, the Foreign Affairs Reform and Restructuring Act of 1998 (112 Stat. 2681, *et seq.;* 22 U.S.C. 6501 note, *et seq.*), Delegation of Authority No. 234 of October 1, 1999, and Delegation of Authority No. 236–3 of August 28, 2000, I hereby determine that the objects to be included in the exhibition "Double Sexus," imported from abroad for temporary exhibition within the United States, are of cultural significance. The objects are imported pursuant to loan agreements with the foreign owners or custodians. I also determine that the exhibition or display of the exhibit objects at the Wexner Center for the Arts at The Ohio State University, Columbus, Ohio, from on or about March 26, 2011, until on or about July 31, 2011, and at possible additional exhibitions or venues yet to be determined, is in the national interest. I have ordered that Public Notice of these Determinations be published in the **Federal Register**.

FOR FURTHER INFORMATION CONTACT: For further information, including a list of the exhibit objects, contact Paul W. Manning, Attorney-Adviser, Office of the Legal Adviser, U.S. Department of State (telephone: 202–632–6469). The mailing address is U.S. Department of State, SA–5, L/PD, Fifth Floor (Suite 5H03), Washington, DC 20522–0505.

Dated: March 2, 2011.

Ann Stock,

Assistant Secretary, Bureau of Educational and Cultural Affairs, Department of State.

[FR Doc. 2011–5240 Filed 3–7–11; 8:45 am]

BILLING CODE 4710–05–P

DEPARTMENT OF STATE

[Public Notice: 7356]

Culturally Significant Objects Imported for Exhibition Determinations: "Charlotte Salomon: Life? Or Theatre?"

SUMMARY: Notice is hereby given of the following determinations: Pursuant to the authority vested in me by the Act of October 19, 1965 (79 Stat. 985; 22 U.S.C. 2459), Executive Order 12047 of March 27, 1978, the Foreign Affairs Reform and Restructuring Act of 1998 (112 Stat. 2681, *et seq.;* 22 U.S.C. 6501 note, *et seq.*), Delegation of Authority No. 234 of October 1, 1999, and Delegation of Authority No. 236–3 of August 28, 2000, I hereby determine that the objects to be included in the exhibition "Charlotte Salomon: Life? Or Theatre?" imported from abroad for temporary exhibition within the United States, are of cultural significance. The objects are imported pursuant to a loan agreement with the foreign owner or custodian. I also determine that the exhibition or display of the exhibit objects at the Contemporary Jewish Museum, San Francisco, CA, from on or about March 31, 2011, until on or about July 31, 2011, and at possible additional exhibitions or venues yet to be determined, is in the national interest. I have ordered that Public Notice of these Determinations be published in the **Federal Register**.

FOR FURTHER INFORMATION CONTACT: For further information, including a list of the exhibit objects, contact Julie Simpson, Attorney-Adviser, Office of the Legal Adviser, U.S. Department of State (telephone: 202–632–6467). The mailing address is U.S. Department of State, SA–5, L/PD, Fifth Floor (Suite 5H03), Washington, DC 20522–0505.

Dated: March 2, 2011.

Ann Stock,

Assistant Secretary, Bureau of Educational and Cultural Affairs, Department of State.

[FR Doc. 2011–5254 Filed 3–7–11; 8:45 am]

BILLING CODE 4710–05–P

DEPARTMENT OF STATE

[Public Notice: 7357]

Culturally Significant Objects Imported for Exhibition Determinations: "Poetry in Clay: Korean Buncheong Ceramics from the Leeum, Samsung Museum of Art"

SUMMARY: Notice is hereby given of the following determinations: Pursuant to the authority vested in me by the Act of October 19, 1965 (79 Stat. 985; 22 U.S.C. 2459), Executive Order 12047 of March

27, 1978, the Foreign Affairs Reform and Restructuring Act of 1998 (112 Stat. 2681, *et seq.;* 22 U.S.C. 6501 note, *et seq.*), Delegation of Authority No. 234 of October 1, 1999, and Delegation of Authority No. 236–3 of August 28, 2000, I hereby determine that the objects to be included in the exhibition "Poetry in Clay: Korean Buncheong Ceramics from the Leeum, Samsung Museum of Art," imported from abroad for temporary exhibition within the United States, are of cultural significance. The objects are imported pursuant to loan agreements with the foreign owners or custodians. I also determine that the exhibition or display of the exhibit objects at the Metropolitan Museum of Art, New York, New York, from on or about April 5, 2011, until on or about August 14, 2011, and at possible additional exhibitions or venues yet to be determined, is in the national interest. I have ordered that Public Notice of these Determinations be published in the **Federal Register**.

FOR FURTHER INFORMATION CONTACT: For further information, including a list of the exhibit objects, contact Paul W. Manning, Attorney-Adviser, Office of the Legal Adviser, U.S. Department of State (telephone: 202–632–6469). The mailing address is U.S. Department of State, SA–5, L/PD, Fifth Floor (Suite 5H03), Washington, DC 20522–0505.

Dated: March 2, 2011.

Ann Stock,

Assistant Secretary, Bureau of Educational and Cultural Affairs, Department of State.

[FR Doc. 2011–5252 Filed 3–7–11; 8:45 am]

BILLING CODE 4710–05–P

DEPARTMENT OF STATE

[Public Notice: 7325]

Shipping Coordinating Committee; Notice of Committee Meeting

The Shipping Coordinating Committee (SHC) will conduct an open meeting at 10 a.m. on Monday March 28th, 2011, in Room 1422 of the United States Coast Guard Headquarters Building, 2100 Second Street, SW., Washington, DC 20593–0001. The primary purpose of the meeting is to prepare for the ninety-eighth Session of the International Maritime Organization's (IMO) Legal Committee to be held at the IMO headquarters in London, United Kingdom, from April 4th–8th, 2011.

The primary matters to be considered include:

—Guidelines on implementation of the 2010 Protocol to the International Convention on Liability and Compensation for Damage in Connection with the Carriage of Hazardous and Noxious Substances by Sea, 1996;

—Provision of financial security in cases of abandonment, personal injury to, or death of seafarers;

—Fair treatment of seafarers in the event of a maritime accident;

—Consideration of a proposal to amend the limits of liability of the 1996 Protocol to the Convention on Limitation of Liability for Maritime Claims, 1976;

—Review of national legislation regarding piracy;

—Matters arising from the 105th regular session of the IMO Council;

—Technical cooperation activitites related to maritime legislation;

—Review of the status of conventions and other treaty instruments emanating from the Legal Committee; and

—Any other business.

—The public should be aware that Legal Committee has received a proposal to discuss liability and compensation issues for transboundary pollution damage resulting from offshore oil exploration and exploitation activities. There is no formal agenda item for this proposal, as it has not yet been adopted to the work programme, but the U.S. delegation anticipates receiving an interim report on informal, intersessional developments on this proposal.

Members of the public may attend this meeting up to the seating capacity of the room. To facilitate the building security process, and to request reasonable accommodation, those who plan to attend should contact the meeting coordinator, Ms. Bronwyn G. Douglass, by e-mail at *bronwyn.douglass@uscg.mil,* by phone at (202) 372–3792, by fax at (202) 372–3972, or in writing at Commandant (CG–0941), U.S. Coast Guard, 2100 2nd Street, SW., Stop 7121, Washington, DC 20593–7121 not later than March 21st, 2011, 7 days prior to the meeting. Requests made after March 21st might not be able to be accommodated. Please note that due to security considerations, two valid, government issued photo identifications must be presented to gain entrance to the Headquarters building. The Headquarters building is accessible by taxi and privately owned conveyance (public transportation is not generally available). However, parking in the vicinity of the building is extremely limited. Additional information regarding this and other IMO SHC public meetings may be found at: *http://www.uscg.mil/imo.*

Dated: March 2, 2011.

Jon Trent Warner,

Executive Secretary, Shipping Coordinating Committee, Department of State.

[FR Doc. 2011–5255 Filed 3–7–11; 8:45 am]

BILLING CODE 4710–09–P

DEPARTMENT OF TRANSPORTATION

Federal Aviation Administration

Office of Commercial Space Transportation; Notice of Availability of the Final Environmental Assessment and Finding of No Significant Impact for Pegasus Launches at Cape Canaveral Air Force Station, Florida

AGENCY: Federal Aviation Administration (FAA), Department of Transportation.

ACTION: Notice of Availability of Final Environmental Assessment and Finding of No Significant Impact.

SUMMARY: In accordance with the National Environmental Policy Act of 1969 (NEPA), 42 U.S.C. 4321–4347 (as amended), Council on Environmental Quality NEPA implementing regulations (40 Code of Federal Regulations [CFR] parts 1500 to 1508), and FAA Order 1050.1E, Change 1, the FAA is announcing the availability of the Final Environmental Assessment (Final EA) and Finding of No Significant Impact (FONSI) for Pegasus Launches at Cape Canaveral Air Force Station. The Final EA was prepared to address the potential environmental impacts of the FAA's Proposed Action for issuing or renewing Launch Operator Licenses to operate Pegasus launch vehicles at CCAFS. Activities addressed in the Final EA include carrier aircraft takeoff and landing from a CCAFS runway and launch of Pegasus vehicle at an altitude of 40,000 feet and approximately 90 nautical miles offshore over the Atlantic Ocean. The Final EA tiers from the Final Programmatic Environmental Impact Statement (PEIS) for Licensing Launches (2001 PEIS) and focuses on localized and site-specific effects of FAA issuing or renewing Launch Operator Licenses to operate Pegasus expendable launch vehicles at CCAFS. The 2001 PEIS, evaluated the launch impacts associated with four vehicle categories (small, medium, intermediate, and heavy-payload capacities); three propellant types (solid, liquid, and hybrid propellant); and three launch scenarios (land, air, and sea). The Pegasus launch vehicle falls within the parameters of the small-payload capacity vehicle using solid propellant to launch from

the air. The 2001 PEIS evaluated the impacts of launching 72 small capacity rockets, including the Pegasus launch vehicle family, over a 10-year period. The estimated annual number of launches ranged from four to nine launches, with an average of seven annual launches. The rate of Pegasus launches at CCAFS under the FAA's Proposed Action would not be expected to exceed the rate of launches analyzed in the 2001 PEIS. The only alternative to the Proposed Action is the No Action Alternative. Under this Alternative, the FAA would not issue or renew Launch Operator Licenses to operate Pegasus launch vehicles at CCAFS.

Resource areas were considered to provide a context for understanding and assessing the potential environmental effects of the Proposed Action, with attention focused on key issues. The resources areas considered in the Final EA included air quality; biological resources (including fish, wildlife, and plants); compatible land use; Department of Transportation Section 4(f) resources; hazardous materials, pollution prevention, and solid waste; historical, architectural, archaeological, and cultural resources; noise; socioeconomic impacts; and water quality (including floodplains and wetlands). Potential cumulative impacts of the Proposed Action were also addressed in the Final EA.

After careful and thorough consideration of available data and information on existing conditions and potential impacts, the FAA has determined that there will be no significant short-term, long-term, or cumulative impacts to the environment or surrounding populations from the issuance or renewal of Launch Operator Licenses to operate Pegasus launch vehicles at CCAFS. The proposed Federal action is consistent with existing national environmental policies and objectives as set forth in Section 101 of NEPA and other applicable environmental requirements and will not significantly affect the quality of the human environment within the meaning of NEPA. Therefore, an Environmental Impact Statement for the Proposed Action is not required and the FAA issued a FONSI.

The FAA has posted the Final EA and FONSI on the FAA Office of Commercial Space Transportation Web site at *http://www.faa.gov/about/office_org/headquarters_offices/ast/environmental/review/launch/.*

FOR FURTHER INFORMATION CONTACT: Mr. Daniel Czelusniak, Environmental Program Lead, Office of Commercial Space Transportation, Federal Aviation Administration, 800 Independence Avenue, SW., Room 325, Washington, DC 20591, telephone (202) 267–5924; E-mail *daniel.czelusniak@faa.gov.*

Issued in Washington, DC, on March 1, 2011.

Michael McElligott,

Manager, Space Systems Development Division.

[FR Doc. 2011–5242 Filed 3–7–11; 8:45 am]

BILLING CODE 4310–13–P

DEPARTMENT OF TRANSPORTATION

Federal Transit Administration

[FTA Docket No. FTA–2011–0014]

Agency Information Collection Activity Under OMB Review

AGENCY: Federal Transit Administration, DOT.

ACTION: Notice of request for comments.

SUMMARY: In accordance with the Paperwork Reduction Act of 1995 (44 U.S.C. 3501 *et seq.*), this notice announces that the Information Collection Request (ICR) abstracted below is forwarded to the Office of Management and Budget OMB) for review and comments. A **Federal Register** Notice with a 60-day comment period soliciting comments on the following information collection was published on December 8, 2010 (Citation 75 FR 76518). No comments were received from that notice.

DATES: Comments must be submitted before April 7, 2011. A comment to OMB is most effective if OMB receives it within 30 days of publication.

FOR FURTHER INFORMATION CONTACT: Sylvia L. Marion, Office of Administration, Office of Management Planning, (202) 366–6680.

SUPPLEMENTARY INFORMATION:

Title: Survey of FTA Stakeholders (*OMB Number: 2132–0564*).

Abstract: Executive Order 12862, "Setting Customer Service Standards," requires FTA to identify its customers and determine what they think about FTA's service. The survey covered in this request will provide FTA with a means to gather data directly from its stakeholders. The information obtained from the survey will be used to assess how FTA's services are perceived by stakeholders, determine opportunities for improvement and establish goals to measure results. The survey will be limited to data collections that solicit voluntary opinions and will not involve information that is required by regulations.

Estimated Total Annual Burden: 1,200 hours.

ADDRESSES: All written comments must refer to the docket number that appears at the top of this document and be submitted to the Office of Information and Regulatory Affairs, Office of Management and Budget, 725 17th Street, NW., Washington, DC 20503, Attention: FTA Desk Officer.

Comments are Invited on: Whether the proposed collection of information is necessary for the proper performance of the functions of the Department, including whether the information will have practical utility; the accuracy of the Department's estimate of the burden of the proposed information collection; ways to enhance the quality, utility, and clarity of the information to be collected; and ways to minimize the burden of the collection of information on respondents, including the use of automated collection techniques or other forms of information technology.

Issued on: March 2, 2011.

Ann M. Linnertz,

Associate Administrator for Administration.

[FR Doc. 2011–5203 Filed 3–7–11; 8:45 am]

BILLING CODE 4910–57–P

DEPARTMENT OF TRANSPORTATION

Federal Transit Administration

Environmental Impact Statement for a Proposed Urban Rail system in Austin, TX

AGENCY: Federal Transit Administration, DOT.

ACTION: Notice of Intent to Prepare an Environmental Impact Statement.

SUMMARY: The Federal Transit Administration (FTA), as the Federal lead agency, and the City of Austin (the City) intend to prepare an Environmental Impact Statement (EIS) for the proposed Urban Rail system in Austin, Texas. The EIS will be prepared in accordance with regulations implementing the National Environmental Policy Act (NEPA), as well as provisions of the recently enacted Safe, Accountable, Flexible, Efficient Transportation Equity Act: A Legacy for Users (SAFETEA–LU). The proposed project, described more completely within, is an Urban Rail System, similar to Streetcar, that would connect key activity centers within Central Austin—Mueller Transit-Oriented Redevelopment (Mueller), the University of Texas at Austin (UT) campus, the State Capitol Complex (Capitol), the central business district (CBD), and Austin-Bergstrom International Airport (ABIA) with each

other and to emerging regional transportation network nodes for commuter rail, regional rail, and rapid bus in Austin, Travis County, Texas. The purpose of this notice is to alert interested parties regarding the intent to prepare the EIS, to provide information on the nature of the proposed project and possible alternatives, and to invite public participation in the EIS process.

DATES: Written comments on the scope of the EIS, including the project's purpose and need, the alternatives to be considered, the impacts to be evaluated, and the methodologies to be used in the evaluations should be sent to Mr. Scott Gross, P.E., Study Manager, City of Austin Transportation Department on or before Friday, April 29, 2011. Written comments should be submitted at least two weeks after the final scoping meeting or at least 30 days after publication of the NOI, whichever date is later. Two public scoping meetings will be held by FTA during which questions about the project will be addressed and written comments will be accepted. The scoping meetings will be held on the following dates:

- Monday, April 4, 2011; 2 p.m. to 5 p.m.; at the Austin Convention Center (Meeting Room 3 on first floor), 500 E. Cesar Chavez Street, Austin, TX 78709, Telephone (512) 404–4000.
- Wednesday, April 6, 2011; 5 p.m. to 8 p.m.; at the Southwest Educational Development Laboratory (SEDL) (Conference Room on first floor) in the Mueller Redevelopment, 4700 Mueller Boulevard, Austin, TX 78723, Telephone (512) 476–6861.

Three local agency public outreach meetings, at which information about the project will be provided, will be held on the following dates:

- Thursday, April 7, 2011; 11 a.m. to 2 p.m.; at the AT&T Executive Education and Conference Center (Classroom 103 on first floor), 1900 University Avenue, Austin, TX 78705, Telephone (512) 404–1900.
- Thursday, April 7, 2011; 5 p.m. to 8 p.m.; at the George Washington Carver Museum (Museum Foyer), 1161 Angelina Street, Austin, TX 78702, Telephone (512) 974–4926.
- Saturday, April 9, 2011; 11 a.m. to 2 p.m.; at the Ruiz Branch Library (Meeting Rooms), 1600 Grove Boulevard, Austin, TX 78741, Telephone (512) 974–7500.

The buildings used for the meetings are accessible to persons with disabilities. Any individual who requires special assistance, such as a sign language interpreter, to participate in the meetings should contact Marión Sánchez at Estilo Communications (512)–477–1018 or *marion@estilopr.com,* five days prior to the meeting.

Information describing the project purpose and need and the alternatives proposed for analysis will be available at the meetings and on the project Web site at *http://www.austinstrategicmobility.com/resources/urban-rail-project.* Paper copies of the information materials may also be obtained from Mr. Scott Gross, P.E., Study Manager, City of Austin Transportation Department at (512) 974–5621 or e-mail *scott.gross@ci.austin.tx.us.* Representatives of Native American Tribal governments and of all Federal, State, regional and local agencies that may have an interest in any aspect of the project will be invited to be participating or cooperating agencies, as appropriate.

ADDRESSES: Written comments on the scope of the EIS, including the project's purpose and need, the alternatives to be considered, the impacts to be evaluated, and the methodologies to be used in the evaluations will be accepted at the public scoping meetings or they may be sent to: Mr. Scott Gross, P.E., Study Manager, City of Austin Transportation Department, 505 Barton Springs Road, Suite 800, Austin, TX 78704, e-mail *scott.gross@ci.austin.tx.us.*

FOR FURTHER INFORMATION CONTACT: Ms. Julieann Dwyer, Environmental Protection Specialist, Federal Transit Administration Region VI, 819 Taylor Street, Room 8A36, Fort Worth, TX 76102, phone 817–978–0550, e-mail *julieann.dwyer@dot.gov.*

SUPPLEMENTARY INFORMATION:

Scoping

FTA and the City of Austin invite all interested individuals and organizations, public agencies, and Native American Tribes to comment on the scope of the EIS for the proposed Urban Rail system, including the project's purpose and need, the alternatives to be studied, the impacts to be evaluated, and the evaluation methods to be used. Comments should address (1) feasible alternatives that may better achieve the project's purpose and need with fewer adverse impacts, and (2) any significant environmental impacts relating to the alternatives.

"Scoping" as described in the regulations implementing the National Environmental Policy Act (NEPA) (Title 40 of the Code of Federal Regulations (CFR) 1501.7) has specific and fairly limited objectives, one of which is to identify the significant issues associated with alternatives that will be examined in detail in the document, while simultaneously limiting consideration and development of issues that are not truly significant. It is in the NEPA scoping process that potentially significant environmental impacts—those that give rise to the need to prepare an environmental impact statement—should be identified; impacts that are deemed not to be significant need not be developed extensively in the context of the impact statement, thereby keeping the statement focused on impacts of consequence consistent with the ultimate objectives of the NEPA implementing regulations—"to make the environmental impact statement process more useful to decision makers and the public; and to reduce paperwork and the accumulation of extraneous background data, in order to emphasize the need to focus on real environmental issues and alternatives * * * [by requiring] impact statements to be concise, clear, and to the point, and supported by evidence that agencies have made the necessary environmental analyses" (Executive Order 11991, of May 24, 1977). Transit projects may also generate environmental benefits; these should be highlighted as well—the impact statement process should draw attention to positive impacts, not just negative impacts.

Once the scope of the environmental study, including significant environmental issues to be addressed, is settled, an annotated outline of the document will be prepared and shared with participating agencies and posted on the project Web site. The outline serves at least three worthy purposes, including (1) Documenting the results of the scoping process; (2) contributing to the transparency of the process; and (3) providing a clear roadmap for concise development of the environmental document.

Purpose and Need for the Project

The purpose of the Urban Rail system is to improve the mobility, connectivity, and sustainability of Central Austin—the region's core—by providing greater mobility options; improving person-moving capacity; improving access and linkages to major activity centers and commuter and regional rail; supporting the City's environmental, public health, and economic development goals; and encouraging investment.

The need for the proposed Urban Rail system is based on the following considerations for Central Austin: A need for direct connectivity between Mueller Redevelopment, the University of Texas, the State Capitol Complex, the central business district, and Austin-

Bergstrom International Airport; a need for a direct link between existing and planned passenger rail systems at opposite sides of downtown; a need for increased transportation network capacity in constrained rights-of-way through established neighborhoods; a need for additional alternatives to single-occupancy/privately owned vehicles; a need to attract and concentrate development within the region's core; a need to improve air quality by reducing the growth of automobile emissions; and a need to support the City's environmental, public health, and economic development goals.

Alternatives

The City of Austin Transportation Department (ATD) completed the Central Austin Transit Study (CATS) Alternatives Evaluation in July 2010, which evaluated potential route, technology, and investment alternatives. The CATS is posted on the project Web site. ATD recommended Urban Rail as the modal option on the alignment described above in July 2010, after evaluating three investment alternatives: *No-Build, Better Bus (TSM),* and *Urban Rail.* The Better Bus (TSM) Alternative, as described in detail in the CATS, was considered per FTA New Starts requirements and will not be examined further for NEPA purposes because it does not meet the purpose and need of the proposed action. Accordingly, the Urban Rail Alternative and the No-Build Alternative are proposed to be evaluated in the EIS. These two NEPA alternatives are described as follows:

No-Build Alternative: The No-Build Alternative is defined as the existing transportation system, plus any committed transportation improvements. Committed transportation improvements include the highway and transit projects in CAMPO's current fiscally constrained long-range transportation plan, *CAMPO 2035 Plan,* as amended, except for the proposed Urban Rail system. The No-Build Alternative serves as the NEPA baseline against which the environmental effects of other alternatives, including the proposed project, are measured. Under the No-Build Alternative, the transit network within the project area is projected to be substantially the same as it is now, with bus service adjusted to meet anticipated demand. All elements of the No-Build Alternative are included in each of the other alternatives.

Urban Rail Alternative: The Urban Rail Alternative would utilize modern streetcar technology on the alignment described above, along with all of the elements of the No-Build Alternative. Urban Rail is the City of Austin's term for an overhead-electric powered fixed-guideway service that blends the operational characteristics of modern streetcar and light rail transit (LRT). Urban Rail may use shared street or exclusive rights-of-way with single- or multi-car trains, boarding passengers at track level or car floor level.

Other refinements to the Urban Rail Alternative will be considered as part of the EIS alternatives' evaluation process, including refinement of the proposed alignment, Lady Bird Lake crossing options, project termini, operating plans, stop locations, vehicle storage and maintenance facility location, and/or design alternatives, such as median-running vs. curb-running location within the preferred alignment. While the environmental process will examine the entire 16.5 mile system, an initial phase or First Investment Segment (FIS), consisting of a minimum operating segment (MOS), will be identified within this NEPA process and may be constructed and operated as a starter system, with the remainder being constructed during subsequent phases.

In addition to the alternatives described above, other transit alternatives identified through the public and agency scoping process will be evaluated for potential inclusion in the EIS.

EIS Process and the Role of Participating Agencies and the Public

The regulations implementing NEPA, as well as provisions of the Safe, Accountable, Flexible, Efficient Transportation Equity Act: A Legacy for Users (SAFETEA–LU), call for public involvement in the EIS process. Section 6002 of SAFETEA–LU (23 U.S.C. 139) require that FTA and the City do the following: (1) Extend an invitation to other Federal and non-Federal agencies and Native American Tribes that may have an interest in the proposed project to become "participating agencies;" (2) provide an opportunity for involvement by participating agencies and the public to help define the purpose and need for a proposed project, as well as the range of alternatives for consideration in the EIS; and (3) establish a plan for coordinating public and agency participation in, and comment on, the environmental review process. Any Federal or non-Federal agency or Native American Tribe interested in the proposed project that does not receive an invitation to become a participating agency should notify at the earliest opportunity the Project Manager identified above under **ADDRESSES**.

A comprehensive public involvement program and a Coordination Plan for public and interagency involvement will be developed for the project and posted on the project's Web site at *http://www.austinstrategicmobility.com/resources/urban-rail-project.* The public involvement program includes a full range of activities including maintaining the project Web site and outreach to local officials, community and civic groups, and the public. Specific activities or events for involvement will be detailed in the project's public participation plan.

Paperwork Reduction

The Paperwork Reduction Act seeks, in part, to minimize the cost to the taxpayer of the creation, collection, maintenance, use, dissemination, and disposition of information. Consistent with this goal and with principles of economy and efficiency in government, it is FTA policy to limit insofar as possible distribution of complete printed sets of environmental documents. Accordingly, unless a specific written request for a complete printed set of environmental documents is received by the close of the scoping process by the Project Manager identified under **ADDRESSES**, FTA and its grantees will distribute only the executive summary and a Compact Disc (CD) of the complete environmental document. A complete printed set of the environmental document will be available for review at the project sponsor's offices and elsewhere; an electronic copy of the complete environmental document will also be available on the project Web site.

Other

The City is expecting to seek New or Small Starts funding for some or all phases of the proposed project under 49 United States Code 5309 and will, therefore, be subject to New Starts regulations (49 Code of Federal Regulations (CFR) part 611) at some point in the project development process. The New and Small Starts regulations also require the submission of certain project justification and local financial commitment information to support a request to FTA for approval of entry into the Preliminary Engineering phase of the New Starts review process. Pertinent New Starts evaluation criteria will be included in the EIS.

The EIS will be prepared in accordance with NEPA and its implementing regulations issued by the Council on Environmental Quality (40 CFR parts 1500–1508) and with the FTA/Federal Highway Administration regulations "Environmental Impact and

Related Procedures" (23 CFR part 771). Related environmental procedures to be addressed during the NEPA process include, but are not limited to, Executive Order 12898 on Environmental Justice; Section 106 of the National Historic Preservation Act; and Section 4(f) of the DOT Act (49 U.S.C. 303).

Issued on: March 2, 2011.

Blas M. Uribe,

Deputy Regional Administrator, Federal Transit Administration Region VI, Fort Worth, Texas.

[FR Doc. 2011–5201 Filed 3–7–11; 8:45 am]

BILLING CODE 4910–57–P

DEPARTMENT OF TRANSPORTATION

National Highway Traffic Safety Administration

Information Collection Activities: Submission for the Office of Management and Budget (OMB) Review; Request for Comment

AGENCY: National Highway Traffic Safety Administration (NHTSA), DOT.

ACTION: Notice of the OMB review of information collection and solicitation of public comment.

SUMMARY: In compliance with the Paperwork Reduction Act of 1995 (44 U.S.C. 3501 *et seq.*), this notice announces that the Information Collection Request (ICR) abstracted below will be submitted to the Office of Management and Budget (OMB) for review. The ICR describes the nature of the information collection and its expected burden. A **Federal Register** Notice with a 60-day comment period soliciting public comment on the following information collection was published on December 9, 2010 (75 FR 76781–76783).

DATES: Submit comments to the Office of Management and Budget (OMB) on or before April 7, 2011.

ADDRESSES: Send comments to the Office of Information and Regulatory Affairs, Office of Management and Budget, 725 17th Street, NW., Washington, DC 20503, Attention: Desk Officer for Department of Transportation, National Highway Traffic Safety Administration.

FOR FURTHER INFORMATION CONTACT: Alan Block at the National Highway Traffic Safety Administration, Office of Behavioral Safety Research (NTI–131), 1200 New Jersey Avenue, SE., Washington, DC 20590. Mr. Block's phone number is 202–366–6401 and his e-mail address is *alan.block@dot.gov.*

SUPPLEMENTARY INFORMATION:

Title: Evaluation Surveys for Impaired Driving and Seat Belt Interventions.

OMB Number: 2127–0646.

Type of Request: Revision.

Abstract: Telephone surveys have been an important component in NHTSA's evaluation of seat belt and alcohol-impaired driving intervention activity. They have been used to measure public awareness of intervention campaigns, penetration of campaign messages, and perceived risk of negative consequences from engaging in proscribed behavior. The surveys have typically followed a pre-post design, where differences between an initial baseline survey wave and a later survey wave were associated with an intervening intervention. NHTSA has found such surveys to be valuable in assessing the multi-million dollar national media campaigns conducted for the National Impaired Driving Crackdowns and the National Click It or Ticket Mobilizations. They also have been useful in evaluating localized programs that tested variants of intervention models by providing information to assess campaign communications or interpret collected behavioral measures. With seat belt and alcohol-impaired driving intervention activity anticipated to remain heavy for the foreseeable future, there is a need for NHTSA to continue to apply these data collection techniques to see if the campaigns are achieving their objectives.

NHTSA is proposing to continue conducting national telephone surveys surrounding the National Impaired Driving Crackdowns and National Click It or Ticket Mobilizations. In conducting one or more of the National surveys, NHTSA may have a need to collect information to assess localized activity associated with the National Crackdown or Mobilization. This would involve augmentation of the pre- and post national sample with one or more Regional, State, or Community samples. In addition to the telephone surveys associated with the National Impaired Driving Crackdown and National Click It or Ticket Mobilization, NHTSA intends to conduct telephone surveys to assess selected demonstrations of interventions designed to reduce alcohol-impaired driving and/or increase seat belt use. The surveys will also follow a pre-post design. Interventions sustained over an extended period of time may add one or more interim survey waves.

NHTSA currently has an approved inventory of 164,800 10-minute interviews under OMB Number 2127–0646 for surveys to help assess the National Impaired Driving Crackdowns, the National Click It or Ticket Mobilizations, and certain localized seat belt or alcohol-impaired driving demonstration projects. To date, approximately 59,000 interviews have either been completed or are scheduled to be completed prior to an OMB decision regarding this requested revision. The requested revision is to decrease the inventory to 160,211 while renewing the clearance for three more years.

Affected Public: Randomly selected members of the general public eighteen and older in telephone households.

Estimated Total Annual Burden: 5,600 hours per year (33,600 10-minute interviews) divided as follows: 2,000 hours (12,000 interviews) for national surveys associated with the National Impaired Driving Crackdowns or National Click It or Ticket Mobilizations, 1,333 hours (8,000 interviews) for localized surveys associated with the National Crackdowns or Mobilizations, and 2,267 hours (13,600 interviews) for other selected seat belt or alcohol-impaired driving demonstrations. Over a three year period this would be 16,800 hours for 100,800 interviews.

Comments are invited on: Whether the proposed collection of information is necessary for the proper performance of the functions of the Department of Transportation, including whether the information will have practical utility; the accuracy of the Department's estimate of the burden of the proposed information collection; ways to enhance the quality, utility and clarity of the information to be collected; and ways to minimize the burden of the collection of information on respondents, including the use of automated collection techniques or other forms of information technology. A comment to OMB is most effective if OMB receives it within 30 days of publication.

Authority: 44 U.S.C. Section 3506(c)(2)(A).

Jeffrey Michael,

Associate Administrator, Research and Program Development.

[FR Doc. 2011–5216 Filed 3–7–11; 8:45 am]

BILLING CODE 4910–59–P

DEPARTMENT OF TRANSPORTATION

National Highway Traffic Safety Administration

Petition for Exemption From the Federal Motor Vehicle Motor Theft Prevention Standard; General Motors Corporation

AGENCY: National Highway Traffic Safety Administration, Department of Transportation (DOT).

ACTION: Grant of petition for exemption.

SUMMARY: This document grants in full the petition of General Motors Corporation's (GM) petition for an exemption of the Chevrolet Sonic vehicle line in accordance with 49 CFR part 543, *Exemption from the Theft Prevention Standard.* This petition is granted because the agency has determined that the antitheft device to be placed on the line as standard equipment is likely to be as effective in reducing and deterring motor vehicle theft as compliance with the parts-marking requirements of the Theft Prevention Standard (49 CFR part 541).

DATES: The exemption granted by this notice is effective beginning with model year (MY) 2012.

FOR FURTHER INFORMATION CONTACT: Ms. Deborah Mazyck, Office of International Policy, Fuel Economy, and Consumer Standards, NHTSA, W43–443, 1200 New Jersey Avenue, SE., Washington, DC 20590. Ms. Mazyck's phone number is (202) 366–4139. Her fax number is (202) 493–2990.

SUPPLEMENTARY INFORMATION: In a petition dated December 9, 2010, GM requested an exemption from the parts-marking requirements of the theft prevention standard (49 CFR part 541) for the Chevrolet Sonic vehicle line beginning with MY 2012. The petition requested an exemption from parts-marking pursuant to 49 CFR 543, *Exemption from Vehicle Theft Prevention Standard,* based on the installation of an antitheft device as standard equipment for the entire vehicle line.

Under § 543.5(a), a manufacturer may petition NHTSA to grant an exemption for one vehicle line per model year. In its petition, GM provided a detailed description and diagram of the identity, design, and location of the components of the antitheft device for the Chevrolet Sonic vehicle line. GM will install a passive, transponder-based, electronic immobilizer device (PASS-Key III+) as standard equipment on its Chevrolet Sonic vehicle line beginning with MY 2012. GM stated that the device will provide protection against unauthorized use (*i.e.,* starting and engine fueling), but will not provide any visible or audible indication of unauthorized vehicle entry (*i.e.,* flashing lights or horn alarm).

The PASS-Key III+ device is designed to be active at all times without direct intervention by the vehicle operator. The system is fully armed immediately after the ignition has been turned off and the key removed. Components of the antitheft device include an electronically-coded ignition key, an antenna module, a controller module and an engine control module. The ignition key contains electronics molded into the key head, providing billions of possible electronic combinations. The electronics receive energy and data from the controller module. Upon receipt of the data, the key will calculate a response to the data using secret information and an internal encryption algorithm, and transmit the response back to the vehicle. The controller module translates the radio frequency signal received from the key into a digital signal and compares the received response to an internally calculated value. If the values match, the key is recognized as valid and one of 65,534 "Vehicle Security Passwords" is transmitted to the engine control module to enable fueling and starting of the vehicle. If an invalid key code is received, the PASS-Key III+ controller module will send a "Disable Password" to the engine control module and starting, ignition, and fuel will be inhibited.

In addressing the specific content requirements of 543.6, GM provided information on the reliability and durability of its proposed device. To ensure reliability and durability of the device, GM conducted tests based on its own specified standards. GM stated that the design and assembly processes of the system and components are validated for a vehicle life of 10 years and 150,000 miles of performance. GM also provided a detailed list of the tests conducted used to validate integrity, durability and reliability, and after each test, the components must operate as designed.

GM stated that the PASS-Key III+ system has been designed to enhance the functionality and theft protection provided by GM's first, second and third generation PASS-Key, PASS-key II, and PASS-Key III systems. GM also stated that there is data provided by the American Automobile Manufacturers Association to Docket 97–042; Notice 1, that these systems will be effective in reducing and deterring motor vehicle theft.

GM indicated that the theft rates, as reported by the Federal Bureau of Investigation's National Crime Information Center (NCIC), are lower for exempted GM models equipped with the electronically coded systems which have exemptions from the parts-marking requirements of 49 CFR part 541, than the theft rates for earlier models with similar appearance and construction which were parts-marked. Based on the performance of the PASS-Key, PASS-Key II, and PASS-Key III systems on other GM models, and the advanced technology utilized in PASS-Key III+ and the Keyless Access System, GM believes that these systems will be more effective in deterring theft than the parts-marking requirements of 49 CFR part 541. GM believes that the agency should find that inclusion of the PASS-Key III+ system on all vehicles in the Chevrolet Sonic line is sufficient to qualify this vehicle line for full exemption from the parts-marking requirements.

GM compared the device proposed for its Chevrolet Sonic vehicle line with other devices which NHTSA has determined to be as effective in reducing and deterring motor vehicle theft as would compliance with the parts-marking requirements. Specifically, the agency notes that in a previous petition, GM stated that the PASS-Key III+ antitheft device was also installed in the MY 2003 and 2004 Cadillac CTS vehicle line. The Cadillac CTS introduced as a MY 2003 vehicle line has been equipped with the PASS-Key III+ device since the start of production. GM stated that the theft rate experienced by the CTS line with installation of the PASS-Key III+ device demonstrates the effectiveness of the device. The theft rates for the 2003 and 2004 Cadillac CTS exhibit theft rates that are lower than the median theft rate (3.5826) established by the agency. The average theft rate using three model years data for the Cadillac CTS is 0.1906. Additionally, GM stated that the Chevrolet Equinox which has already been granted a parts-marking exemption by the agency is equipped with the PASS-Key III+ device. The average theft rate for the Chevrolet Equinox using three model years data is 1.1202. The agency agrees that the device is substantially similar to devices for which the agency has previously approved exemptions.

Based on the evidence submitted by GM, the agency believes that the antitheft device for the Chevrolet Sonic vehicle line is likely to be as effective in reducing and deterring motor vehicle theft as compliance with the parts-

marking requirements of the Theft Prevention Standard (49 CFR 541).

GM's proposed device lacks an audible or visible alarm. Therefore, this device cannot perform one of the functions listed in 49 CFR part 543.6(a)(3), that is, to call attention to unauthorized attempts to enter or move the vehicle. Based on comparison of the reduction in the theft rates of Chevrolet Corvettes using a passive theft deterrent system along with an audible/visible alarm system to the reduction in theft rates for the Chevrolet Camaro and the Pontiac Firebird models equipped with a passive theft deterrent system without an alarm, GM finds that the lack of an alarm or attention attracting device does not compromise the theft deterrent performance of a system such as PASS-Key III+ system. Theft data have indicated a decline in theft rates for vehicle lines equipped with comparable devices that have received full exemptions from the parts-marking requirements. In these instances, the agency has concluded that the lack of a audible or visible alarm has not prevented these antitheft devices from being effective protection against theft.

Pursuant to 49 U.S.C. 33106 and 49 CFR 543.7(b), the agency grants a petition for exemption from the parts-marking requirements of part 541, either in whole or in part, if it determines that, based upon substantial evidence, the standard equipment antitheft device is likely to be as effective in reducing and deterring motor vehicle theft as compliance with the parts-marking requirements of part 541. The agency finds that GM has provided adequate reasons for its belief that the antitheft device for the Chevrolet Sonic vehicle line is likely to be as effective in reducing and deterring motor vehicle theft as compliance with the parts-marking requirements of the Theft Prevention Standard (49 CFR part 541). This conclusion is based on the information GM provided about its device.

The agency concludes that the device will provide four of the five types of performance listed in § 543.6(a)(3): promoting activation; preventing defeat or circumvention of the device by unauthorized persons; preventing operation of the vehicle by unauthorized entrants; and ensuring the reliability and durability of the device.

For the foregoing reasons, the agency hereby grants in full GM's petition for exemption for the Chevrolet Sonic vehicle line from the parts-marking requirements of 49 CFR part 541, beginning with the 2012 model year vehicles. The agency notes that 49 CFR part 541, Appendix A–1, identifies those lines that are exempted from the Theft Prevention Standard for a given model year. 49 CFR part 543.7(f) contains publication requirements incident to the disposition of all part 543 petitions. Advanced listing, including the release of future product nameplates, the beginning model year for which the petition is granted and a general description of the antitheft device is necessary in order to notify law enforcement agencies of new vehicle lines exempted from the parts marking requirements of the Theft Prevention Standard.

If GM decides not to use the exemption for this line, it should formally notify the agency. If such a decision is made, the line must be fully marked according to the requirements under 49 CFR parts 541.5 and 541.6 (marking of major component parts and replacement parts).

NHTSA notes that if GM wishes in the future to modify the device on which this exemption is based, the company may have to submit a petition to modify the exemption. Part 543.7(d) states that a part 543 exemption applies only to vehicles that belong to a line exempted under this part and equipped with the antitheft device on which the line's exemption is based. Further, part 543.9(c)(2) provides for the submission of petitions "to modify an exemption to permit the use of an antitheft device similar to but differing from the one specified in that exemption."

The agency wishes to minimize the administrative burden that part 543.9(c)(2) could place on exempted vehicle manufacturers and itself. The agency did not intend in drafting part 543 to require the submission of a modification petition for every change to the components or design of an antitheft device. The significance of many such changes could be *de minimis.* Therefore, NHTSA suggests that if the manufacturer contemplates making any changes, the effects of which might be characterized as *de minimis,* it should consult the agency before preparing and submitting a petition to modify.

Authority: 49 U.S.C. 33106; delegation of authority at 49 CFR 1.50.

Issued on: March 1, 2011.

Joseph S. Carra,

Acting Associate Administrator for Rulemaking.

[FR Doc. 2011–5112 Filed 3–7–11; 8:45 am]

BILLING CODE 4910–59–P

DEPARTMENT OF THE TREASURY

Internal Revenue Service

Open Meeting for the Electronic Tax Administration Advisory Committee (ETAAC)

AGENCY: Internal Revenue Service (IRS), Treasury.

ACTION: Notice of open meeting.

SUMMARY: In 1998 the Internal Revenue Service established the Electronic Tax Administration Advisory Committee (ETAAC).The primary purpose of ETAAC is for industry partners to provide an organized public forum for discussion of electronic tax administration issues in support of the overriding goal that paperless filing should be the preferred and most convenient method of filing tax and information returns. ETAAC offers constructive observations about current or proposed policies, programs, and procedures, and suggests improvements. Listed is a summary of the agenda along with the planned discussion topics.

Summarized Agenda

8:30 a.m.—Meet and Greet
9 a.m.—Meeting Opens
11 a.m.—Meeting Adjourns

The topics for discussion include:

(1) ETAAC Security Subcommittee
(2) Filing Season Status Update
(3) Overview of ETA Operations

Note: Last-minute changes to these topics are possible and could prevent advance notice.

DATES: There will be a meeting of the ETAAC on Thursday, March 24, 2011. You must register in advance to be put on a guest list to attend the meeting. This meeting will be open to the public, and will be in a room that accommodates approximately 40 people, including members of ETAAC and IRS officials. Seats are available to members of the public on a first-come, first-served basis. Escorts will be provided so attendees are encouraged to arrive at least 30 minutes before the meeting begins.

ADDRESSES: The meeting will be held at the Internal Revenue Service, 1111 Constitution Avenue, NW., Room 2116, Washington, DC 20024.

FOR FURTHER INFORMATION CONTACT: You must provide your name in advance for the guest list and be able to show your State-issued picture identification on the day of the meeting. Otherwise, you will not be able to attend the meeting as this is a secured building. To receive a copy of the agenda or general information about the ETAAC, please

contact Cassandra Daniels on 202–283–2178 or at *etaac@irs.gov* by Tuesday, March 22, 2011. Notification of intent should include your name, organization and telephone number. Please spell out all names if you leave a voice message.

SUPPLEMENTARY INFORMATION: ETAAC reports to the Director, Electronic Tax Administration, who is also the executive responsible for the electronic tax administration program. Increasing participation by external stakeholders in the development and implementation of the strategy for electronic tax administration will help IRS achieve the goal that paperless filing should be the preferred and most convenient method of filing tax and information returns. ETAAC members are not paid for their time or services, but consistent with Federal regulations, they are reimbursed for their travel and lodging expenses to attend the public meetings, working sessions, and an orientation each year.

Dated: February 24, 2011.

Cecille M. Jones,

Acting Director, Electronic Tax Administration.

[FR Doc. 2011–5256 Filed 3–7–11; 8:45 am]

BILLING CODE 4830–01–P

U.S.-CHINA ECONOMIC AND SECURITY REVIEW COMMISSION

Notice of Open Public Hearing

AGENCY: U.S.-China Economic and Security Review Commission.

ACTION: Notice of open public hearing—March 10, 2011 Washington, DC.

SUMMARY: Notice is hereby given of the following hearing of the U.S.-China Economic and Security Review Commission.

Name: William A. Reinsch, Chairman of the U.S.-China Economic and Security Review Commission.

The Commission is mandated by Congress to investigate, assess, and report to Congress annually on "the national security implications of the economic relationship between the United States and the People's Republic of China."

Pursuant to this mandate, the Commission will hold a public hearing in Washington, DC on March 10, 2011, to address "China's Narratives Regarding National Security Policy."

Background: This is the third public hearing the Commission will hold during its 2011 report cycle to collect input from leading academic, industry, and government experts on national security implications of the U.S. bilateral trade and economic relationship with China. The March 10 hearing will examine the various narratives emerging from China in regards to Chinese foreign and national security policy. By examining these narratives in greater detail, the hearing will seek to offer greater insight into policy debates inside the Chinese Communist Party (CCP) regarding China's relations with other countries, and China's future role in the world. The March 10 hearing will be co-chaired by Commissioners Jeffrey Fiedler and Dennis Shea.

Any interested party may file a written statement by March 10, 2011, by mailing to the contact below. A portion of each panel will include a question and answer period between the Commissioners and the witnesses.

Transcripts of past Commission public hearings may be obtained from the USCC Web site *http://www.uscc.gov.*

Date and Time: Thursday, March 10, 2011, 9:15 a.m. to 2:45 p.m. Eastern Standard Time. A detailed agenda for the hearing and roundtable will be posted to the Commission's Web site at *http://www.uscc.gov* as soon as available.

ADDRESSES: The hearing will be held on Capitol Hill in Room 106 of the Dirksen Senate Office Building, located at Constitution Avenue and 1st Street, NE in Washington, DC 20002. Public seating is limited to about 50 people on a first come, first served basis. *Advance reservations are not required.*

FOR FURTHER INFORMATION CONTACT: Any member of the public seeking further information concerning the hearing should contact Michael Danis, Executive Director for the U.S.-China Economic and Security Review Commission, 444 North Capitol Street, NW., Suite 602, Washington DC 20001; phone: 202–624–1407, or via e-mail at *contact@uscc.gov.*

Authority: Congress created the U.S.-China Economic and Security Review Commission in 2000 in the National Defense Authorization Act (Pub. L. 106–398), as amended by Division P of the Consolidated Appropriations Resolution, 2003 (Pub. L. 108–7), as amended by Pub. L. 109–108 (November 22, 2005).

Dated: March 3, 2011.

Michael Danis,

Executive Director, U.S.-China Economic and Security Review Commission.

[FR Doc. 2011–5264 Filed 3–7–11; 8:45 am]

BILLING CODE 1137–00–P

FEDERAL REGISTER

Vol. 76 Tuesday,

No. 45 March 8, 2011

Part II

Department of Education

48 CFR Chapter 34

Department of Education Acquisition Regulation; Rule

DEPARTMENT OF EDUCATION

48 CFR Chapter 34

RIN 1890–AA16

[Docket ID ED–2010–OCFO–0015]

Department of Education Acquisition Regulation

AGENCY: Office of the Chief Financial Officer, Department of Education (Department).

ACTION: Final regulations.

SUMMARY: The Secretary reissues the Department of Education Acquisition Regulation (EDAR) in order to update it to accurately implement the current Federal Acquisition Regulation (FAR) and Department policies.

DATES: These regulations are effective May 9, 2011.

FOR FURTHER INFORMATION CONTACT: Nicole Evans. Telephone: (202) 245–6172 or via Internet: *Nicole.Evans@ed.gov.*

If you use a telecommunications device for the deaf (TDD), call the Federal Relay Service (FRS), toll free, at 1–800–877–8339.

Individuals with disabilities may obtain this document in an accessible format (*e.g.,* braille, large print, audiotape, or computer diskette) on request to the contact person listed in this section.

SUPPLEMENTARY INFORMATION: On August 23, 2010, the Secretary published a notice of proposed rulemaking (NPRM) in the **Federal Register** (75 FR 51884) to reissue the Department of Education Acquisition Regulation (EDAR). In the preamble to the NPRM, on pages 51884 through 51891, the Secretary discussed how the proposed regulations would update the EDAR to accurately implement the current Federal Acquisition Regulation (FAR) and Department policies.

After the public comment period ended, the Department's contact phone number for issues relating to human subjects changed, so we have updated this phone number in the clause at 3452.224–71, Notice about research activities involving human subjects, and the clause at 3452.224–72, Research activities involving human subjects. Also, we discovered a discrepancy in the regulation in 3416.470 discussing Award Term contracting and the clause prescribed in this section, 3452.216–71 Award-term. Therefore, we removed from 3416.470, Award-term contracting, the sentence, "These decisions are not subject to the Disputes clause." We also have made some minor technical and editorial changes to the regulations.

Analysis of Comments and Changes

In response to the Secretary's invitation in the NPRM, the Department did not receive any comments on the proposed regulations.

Executive Order 12866

Under Executive Order 12866, the Secretary must determine whether a regulatory action is "significant" and therefore subject to the requirements of the Executive order and subject to review by the Office of Management and Budget (OMB). Section 3(f) of Executive Order 12866 defines a "significant regulatory action" as an action likely to result in a rule that may (1) have an annual effect on the economy of $100 million or more, or adversely affect a sector of the economy, productivity, competition, jobs, the environment, public health or safety, or State, local or Tribal governments or communities in a material way (also referred to as an "economically significant" rule); (2) create serious inconsistency or otherwise interfere with an action taken or planned by another agency; (3) materially alter the budgetary impacts of entitlement grants, user fees, or local programs or the rights and obligations of recipients thereof; or (4) raise novel legal or policy issues arising out of legal mandates, the President's priorities, or the principles set forth in the Executive order. The Secretary has determined that this regulatory action is not significant under section 3(f) of the Executive order.

Potential Costs and Benefits

This rule has been reviewed in accordance with Executive Order 12866. Under the terms of the order, we have assessed the potential costs and benefits of this regulatory action.

The potential costs associated with this regulatory action are those resulting from statutory requirements and those we have determined as necessary for administering the EDAR effectively and efficiently.

In assessing the potential costs and benefits—both quantitative and qualitative—of this regulatory action, we have determined that the benefits of this regulatory action justify the costs.

We have determined, also, that this regulatory action does not unduly interfere with State, local, and Tribal governments in the exercise of their governmental functions.

Regulatory Flexibility Act Certification

Under the Regulatory Flexibility Act (5 U.S.C. 601, *et seq.,* as amended by the Small Business Regulatory Flexibility Act of 1996), whenever an agency is required to publish a notice of rulemaking for any proposed or final rule, it must prepare and make available for public comment a regulatory flexibility analysis that describes the effect of the rule on small entities (*i.e.,* small businesses, small organizations, and small government jurisdictions), unless the agency certifies that the rule will not have a significant economic impact on a substantial number of small entities. The Regulatory Flexibility Act requires Federal agencies to provide a statement of the factual basis for certifying that a rule will not have a significant impact on a substantial number of small entities. Pursuant to the Regulatory Flexibility Act, the Secretary certifies that this rule will not have a significant economic impact on a substantial number of small entities.

The rule updates the EDAR; it does not directly regulate any small entities. As a result, a regulatory flexibility analysis is not required and none has been prepared.

Paperwork Reduction Act of 1995

These regulations do not contain any information collection requirements.

Intergovernmental Review

The EDAR is not subject to Executive Order 12372 and the regulations in 34 CFR part 79.

Electronic Access to This Document

You can view this document, as well as all other documents of this Department published in the **Federal Register**, in text or Adobe Portable Document Format (PDF) on the Internet at the following site: *http://www.ed.gov/news/fedregister.* To use PDF you must have Adobe Acrobat Reader, which is available free at this site.

Note: The official version of this document is the document published in the **Federal Register**. Free Internet access to the official edition of the **Federal Register** and the Code of Federal Regulations is available on GPO Access at: *http://www.gpoaccess.gov/nara/index.html.*

(Catalog of Federal Domestic Assistance Number does not apply.)

List of Subjects in 48 CFR Chapter 34

Government procurement.

Dated: February 23, 2011.

Arne Duncan,

Secretary of Education.

For the reasons discussed in the preamble, the Secretary amends title 48 of the Code of Federal Regulations by revising chapter 34 to read as follows:

TITLE 48—FEDERAL ACQUISITION REGULATIONS SYSTEM

CHAPTER 34—DEPARTMENT OF EDUCATION ACQUISITION REGULATION

PARTS 3400 TO 3499

SUBCHAPTER A—GENERAL

Sec.
3401 ED acquisition regulation system
3402 Definitions of words and terms
3403 Improper business practices and personal conflicts of interest

SUBCHAPTER B—COMPETITION AND ACQUISITION PLANNING

3405 Publicizing contract actions
3406 Competition requirements
3408 Required sources of supplies and services
3409 Contractor qualifications
3412 Acquisition of commercial items

SUBCHAPTER C—CONTRACTING METHODS AND CONTRACT TYPES

3413 Simplified acquisition procedures
3414 Sealed bidding
3415 Contracting by negotiation
3416 Types of contracts
3417 Special contracting methods

SUBCHAPTER D—SOCIOECONOMIC PROGRAMS

3419 Small business programs
3422 Application of labor laws to Government acquisitions
3424 Protection of privacy and freedom of information
3425 Foreign acquisition

SUBCHAPTER E—GENERAL CONTRACTING REQUIREMENTS

3427 Patents, data, and copyrights
3428 Bonds and insurance
3432 Contract financing
3433 Protests, disputes, and appeals

SUBCHAPTER F—SPECIAL CATEGORIES OF CONTRACTING

3437 Service contracting
3439 Acquisition of information technology

SUBCHAPTER G—CONTRACT MANAGEMENT

3442 Contract administration and audit services
3443 Contract modifications
3445 Government property
3447 Transportation

SUBCHAPTER H—CLAUSES AND FORMS

3452 Solicitation provisions and contract clauses

SUBCHAPTER A—GENERAL

PART 3401—ED ACQUISITION REGULATION SYSTEM

Sec.
3401.000 Scope of part.

Subpart 3401.1—Purpose, Authority, Issuance

3401.104 Applicability.
3401.105 Issuance.
3401.105–2 Arrangement of regulations.
3401.105–3 Copies.

Subpart 3401.3—Agency Acquisition Regulations

3401.301 Policy.
3401.303 Publication and codification.
3401.304 Agency control and compliance procedures.

Subpart 3401.4—Deviations

3401.401 Definition.
3401.403 Individual deviations.
3401.404 Class deviations.

Subpart 3401.5—Agency and Public Participation

3401.501 Solicitation of agency and public views.
3401.501–2 Opportunity for public comments.

Subpart 3401.6—Career Development, Contracting Authority, and Responsibilities

3401.601 General.
3401.602–3 Ratification of unauthorized commitments.
3401.670 Nomination and appointment of contracting officer's representatives (CORs).
3401.670–1 General.
3401.670–2 Appointment.
3401.670–3 Contract clause.

Authority: 5 U.S.C. 301 and 20 U.S.C. 1018a.

3401.000 Scope of part.

The Federal Acquisition Regulation System brings together, in title 48 of the Code of Federal Regulations, the acquisition regulations applicable to all executive agencies of the Federal government. This part establishes a system of Department of Education (Department) acquisition regulations, referred to as the EDAR, for the codification and publication of policies and procedures of the Department that implement and supplement the Federal Acquisition Regulation (FAR).

Subpart 3401.1—Purpose, Authority, Issuance

3401.104 Applicability.

(a) The FAR and the EDAR apply to all Department contracts, as defined in FAR Part 2, except where expressly excluded.

(b) 20 U.S.C. 1018a provides the PBO with procurement authority and flexibility associated with sections (a)–(l) of the statute.

(c) For non-appropriated fund contracts, the FAR and EDAR will be followed to the maximum extent practicable, excluding provisions determined by the contracting officer, with the advice of counsel, not to apply to contracts funded with non-appropriated funds. Adherence to a process similar to those required by or best practices suggested by the FAR will not confer court jurisdiction concerning non-appropriated funds that does not otherwise exist.

3401.105 Issuance.

3401.105–2 Arrangement of regulations.

(c)(5) *References and citations.* The regulations in this chapter may be referred to as the Department of Education Acquisition Regulation or the EDAR. References to the EDAR are made in the same manner as references to the FAR. *See* FAR 1.105–2(c).

3401.105–3 Copies.

Copies of the EDAR in the **Federal Register** and Code of Federal Regulations (CFR) may be purchased from the Superintendent of Documents, Government Printing Office (GPO), Washington, DC 20402. An electronic version of the EDAR is available for viewing at: *http://www.ed.gov/policy/fund/reg/clibrary/edar.html.*

Subpart 3401.3—Agency Acquisition Regulations

3401.301 Policy.

(a)(1) Subject to the authorities in FAR 1.301(c) and other statutory authority, the Secretary of Education (Secretary) or delegate may issue or authorize the issuance of the EDAR. It implements or supplements the FAR and incorporates, together with the FAR, Department policies, procedures, contract clauses, solicitation provisions, and forms that govern the contracting process or otherwise control the relationship between the Agency, including its suborganizations, and contractors or prospective contractors. The Head of Contracting Activity (HCA) for FSA may issue supplementary guidelines applicable to FSA.

3401.303 Publication and codification.

(a) The EDAR is issued as chapter 34 of title 48 of the CFR.

(1) The FAR numbering illustrations at FAR 1.105–2 apply to the EDAR.

(2) The EDAR numbering system corresponds with the FAR numbering system. An EDAR citation will include the prefix "34" prior to its corresponding FAR part citation; *e.g.,* FAR 25.108–2 would have corresponding EDAR text numbered as EDAR 3425.108–2.

(3) Supplementary material for which there is no counterpart in the FAR will be codified with a suffix beginning with "70" or, in cases of successive sections

and subsections, will be numbered in the 70 series (*i.e.,* 71–79). These supplementing sections and subsections will appear to the closest corresponding FAR citation; *e.g.,* FAR 16.4 (Incentive Contracts) may be augmented in the EDAR by citing EDAR 3416.470 (Award Term) and FAR 16.403 (Fixed-price incentive contracts) may be augmented in the EDAR by citing EDAR 3416.403–70 (Award fee contracts). (*Note:* These citations are for illustrative purposes only and may not actually appear in the published EDAR). For example:

FAR	Is implemented as	Is augmented as
15	3415	3415.70
15.1	3415.1	3415.170
15.101	3415.101	3415.101–70
15.101–1	3415.101–1	3415.101–1–70
15.101–1(b)	3415.101–1(b)	3415.101–1(b)(70)
15.101–1(b)(1)	3415.101–1(b)(1)	3415.101–1(b)(1)(70)

(c) *Activity-specific authority.* Guidance that is unique to an organization with HCA authority contains that activity's acronym directly preceding the cite. The following activity acronyms apply:

FSA—Federal Student Aid.

3401.304 Agency control and compliance procedures.

(a) The EDAR is issued for Department acquisition guidance in accordance with the policies stated in FAR 1.301. The EDAR is subject to the same review procedures within the Department as other regulations of the Department.

Subpart 3401.4—Deviations

3401.401 Definition.

A deviation from the EDAR has the same meaning as a deviation from the FAR.

3401.403 Individual deviations.

An individual deviation from the FAR or the EDAR must be approved by the Senior Procurement Executive (SPE).

3401.404 Class deviations.

A class deviation from the FAR or the EDAR must be approved by the Chief Acquisition Officer (CAO).

Subpart 3401.5—Agency and Public Participation

3401.501 Solicitation of agency and public views.

3401.501–2 Opportunity for public comments.

Unless the Secretary approves an exception, the Department issues the EDAR, including any amendments to the EDAR, in accordance with the procedures for public participation in 5 U.S.C. 553. Comments on proposed Department notices of proposed rulemaking may be made at *http://www.regulations.gov.*

Subpart 3401.6—Career Development, Contracting Authority, and Responsibilities

3401.601 General.

(a) Contracting authority is vested in the Secretary. The Secretary has delegated this authority to the CAO. The Secretary has also delegated contracting authority to the SPE, giving the SPE broad authority to perform functions dealing with the management direction of the entire Department's procurement system, including implementation of its unique procurement policies, regulations, and standards. Limitations to the extent of this authority and successive delegations are set forth in the respective memorandums of delegations.

3401.602–3 Ratification of unauthorized commitments.

(a) *Definitions.* As used in this subpart, *commitment* includes issuance of letters of intent and arrangements for free vendor services or use of equipment with the promise or the appearance of commitment that a contract, modification, or order will, or may, be awarded.

(b) *Policy.*

(1) The HCA or Chief of the Contracting Office may, or may not, later ratify unauthorized commitments made by individuals without contracting authority or by contracting officers acting in excess of the limits of their delegated authority. Law and regulation requires that only individuals acting within the scope of their authority make acquisitions. Within the Department, that authority vests solely with the Contracting Officer. Acquisitions made by other than authorized personnel are matters of serious misconduct. The employee may be held legally and personally liable for the unauthorized commitment.

(2) Ratifications do not require concurrence from legal counsel.

(3) The person who made the unauthorized commitment must prepare the request for approval that must be submitted through the person's manager to the approving official.

(4) The Chief of the Contracting Office may review and sign or reject ratification requests up to $25,000.

(5) All other ratification requests must be reviewed and signed or rejected by the HCA.

3401.670 Nomination and appointment of contracting officer's representatives (CORs).

3401.670–1 General.

(a) Program offices must nominate personnel for consideration of a COR appointment in accordance with the Department's COR Policy Guide.

(b) The contracting officer must determine what, if any, duties will be delegated to a COR.

(c) The contracting officer may appoint as many CORs as is deemed necessary to support efficient contract administration.

(d) Only individuals with a written delegation of authority from a contracting officer may act in any capacity as a representative of that contracting officer, including any alternate, assistant, or back-up duties to the COR.

(e) For all contracts in which an information technology system exists, the System Security Officer for that system will perform all responsibilities necessary for contractor access to the system.

3401.670–2 Appointment.

COR appointments must be in accordance with the Department's COR Program Guide.

3401.670–3 Contract clause.

Contracting officers must insert a clause substantially the same as the clause at 3452.201–70 (Contracting Officer's Representative (COR)), in all solicitations and contracts for which a COR will be (or is) appointed.

PART 3402—DEFINITIONS OF WORDS AND TERMS

Subpart 3402.1—Definitions

Sec.
3402.101 Definitions.
3402.101–70 Abbreviations and acronyms.

Subpart 3402.2—Definitions Clause

3402.201 Contract clause.

Authority: 5 U.S.C. 301 and 20 U.S.C. 1018a.

Subpart 3402.1—Definitions

3402.101 Definitions.

As used in this chapter—

Chief Acquisition Officer or *CAO* means the official responsible for monitoring the agency's acquisition activities, evaluating them based on applicable performance measurements, increasing the use of full and open competition in agency acquisitions, making acquisition decisions consistent with applicable laws, and establishing clear lines of authority, accountability, and responsibility for acquisition decision-making and developing and maintaining an acquisition career management program.

Chief of the Contracting Office means an official serving in the contracting activity (CAM or FSA Acquisitions) as the manager of a group that awards and administers contracts for a principal office of the Department. *See also* definition of *Head of the Contracting Activity* or *HCA* below.

Contracting Officer's Representative or *COR* means the person representing the Federal government for the purpose of technical monitoring of contract performance. The COR is not authorized to issue any instructions or directions that effect any increases or decreases in the scope of work or that would result in the increase or decrease of the cost or price of a contract or a change in the delivery dates or performance period of a contract.

Department or *ED* means the United States Department of Education.

Head of the Contracting Activity or *HCA* means those officials within the Department who have responsibility for and manage an acquisition organization and usually hold unlimited procurement authority. The Director, Federal Student Aid Acquisitions, is the HCA for FSA. The Director, Contracts and Acquisitions Management (CAM), is the HCA for all other Departmental program offices and all boards, commissions, and councils under the management control of the Department.

Performance-Based Organization or *PBO* is the office within the Department that is mandated by Public Law 105–244 to carry out Federal student assistance or aid programs and report to Congress on an annual basis. It may also be referred to as "Federal Student Aid."

Senior Procurement Executive or *SPE* means the single agency official appointed as such by the head of the agency and delegated broad responsibility for acquisition functions, including issuing agency acquisition policy and reporting on acquisitions agency-wide. The SPE also acts as the official one level above the contracting officer when the HCA is acting as a contracting officer.

3402.101–70 Abbreviations and acronyms.

CAO—Chief Acquisition Officer.
CO—Contracting Officer.
COR—Contracting Officer's Representative.
FSA—Federal Student Aid.
HCA—Head of the Contracting Activity.
IPv6—Internet Protocol version 6.
OMB—Office of Management and Budget.
OSDBU—Office of Small and Disadvantaged Business Utilization.
PBO—Performance-Based Organization (Federal Student Aid).
RFP—Request for Proposal.
SBA—Small Business Administration.
SPE—Senior Procurement Executive.

Subpart 3402.2—Definitions Clause

3402.201 Contract clause.

The contracting officer must insert the clause at 3452.202–1 (Definitions—Department of Education) in all solicitations and contracts in which the clause at FAR 52.202–1 is required.

PART 3403—IMPROPER BUSINESS PRACTICES AND PERSONAL CONFLICTS OF INTEREST

Subpart 3403.1—Safeguards

Sec.
3403.101 Standards of conduct.
3403.101–3 Agency regulations.

Subpart 3403.2—Contractor Gratuities to Government Personnel

3403.203 Reporting suspected violations of the Gratuities clause.

Subpart 3403.3—Reports of Suspected Antitrust Violations

3403.301 General.

Subpart 3403.4—Contingent Fees

3403.409 Misrepresentation or violations of the covenant against contingent fees.

Subpart 3403.6—Contracts with Government Employees or Organizations Owned or Controlled by Them

3403.602 Exceptions.

Authority: 5 U.S.C. 301.

Subpart 3403.1—Safeguards

3403.101 Standards of conduct.

3403.101–3 Agency regulations.

The Department's regulations on standards of conduct and conflicts of interest are in 34 CFR part 73, Standards of Conduct.

Subpart 3403.2—Contractor Gratuities to Government Personnel

3403.203 Reporting suspected violations of the Gratuities clause.

(a) Suspected violations of the Gratuities clause at FAR 52.203–3 must be reported to the HCA in writing detailing the circumstances.

(b) The HCA evaluates the report with the assistance of the Designated Agency Ethics Officer. If the HCA determines that a violation may have occurred, the HCA refers the report to the SPE for disposition.

Subpart 3403.3—Reports of Suspected Antitrust Violations

3403.301 General.

Any Departmental personnel who have evidence of a suspected antitrust violation in an acquisition must—

(1) Report that evidence through the HCA to the Office of the General Counsel for referral to the Attorney General; and

(2) Provide a copy of that evidence to the SPE.

Subpart 3403.4—Contingent Fees

3403.409 Misrepresentation or violations of the covenant against contingent fees.

Any Departmental personnel who suspect or have evidence of attempted or actual exercise of improper influence, misrepresentation of a contingent fee arrangement, or other violation of the Covenant Against Contingent Fees, must report the matter promptly in accordance with the procedures in 3403.203.

Subpart 3403.6—Contracts with Government Employees or Organizations Owned or Controlled by Them

3403.602 Exceptions.

Exceptions under FAR 3.601 must be approved by the HCA.

SUBCHAPTER B—COMPETITION AND ACQUISITION PLANNING

PART 3405—PUBLICIZING CONTRACT ACTIONS

Subpart 3405.2—Synopses of Proposed Contract Actions

Sec.
3405.202 Exceptions.
3405.203 Publicizing and response time.
3405.205 Special situations.
3405.207 Preparation and transmittal of synopses.
3405.270 Notices to perform market surveys.

Subpart 3405.5—Paid Advertisements

3405.502 Authority.

Authority: 5 U.S.C. 301 and 20 U.S.C. 1018a.

Subpart 3405.2—Synopses of Proposed Contract Actions

3405.202 Exceptions.

(a)(15) FSA—Issuance of a synopsis is not required when the firm to be solicited has previously provided a module for the system under a contract that contained cost, schedule, and performance goals and the contractor met those goals.

3405.203 Publicizing and response time.

(c) FSA—Notwithstanding other provisions of the FAR, a bid or proposal due date of less than 30 days is permitted after issuance of a synopsis for acquisitions for noncommercial items. However, if time permits, a bid or proposal due date that affords potential offerors reasonable time to respond and fosters quality submissions should be established.

3405.205 Special situations.

(g) *FSA—Module of a previously awarded system.* Federal Student Aid must satisfy the publication requirements for sole source and competitive awards for a module of a previously awarded system by publishing a notice of intent on the governmentwide point of entry, not less than 30 days before issuing a solicitation. This notice is not required if a contractor who is to be solicited to submit an offer previously provided a module for the system under a contract that contained cost, schedule, and performance goals, and the contractor met those goals.

3405.207 Preparation and transmittal of synopses.

(c) FSA—In Phase One of a Two-Phase Source Selection as described in 3415.302–70, the contracting officer must publish a notice in accordance with FAR 5.2, except that the notice must include only the following:

(1) Notification that the procurement will be conducted using the specific procedures included in 3415.302–70.

(2) A general notice of the scope or purpose of the procurement that provides sufficient information for sources to make informed business decisions regarding whether to participate in the procurement.

(3) A description of the basis on which potential sources are to be selected to submit offers in the second phase.

(4) A description of the information that is to be required to be submitted if the request for information is made separate from the notice.

(5) Any other information that the contracting officer deems is appropriate.

(h) FSA—When modular contracting authority is being utilized, the notice must invite comments and support if it is believed that modular contracting is not suited for the requirement being procured.

3405.270 Notices to perform market surveys.

(a) If a sole source contract is anticipated, the issuance of a notice of a proposed contract action that is detailed enough to permit the submission of meaningful responses and the subsequent evaluation of the responses by the Federal government constitutes an acceptable market survey.

(b) The notice must include—

(1) A clear statement of the supplies or services to be procured;

(2) Any capabilities or experience required of a contractor and any other factor relevant to those requirements;

(3) A statement that all responsible sources submitting a proposal, bid, or quotation must be considered;

(4) Name, business address, and phone number of the Contracting Officer; and

(5) Justification for a sole source and the identity of that source.

Subpart 3405.5—Paid Advertisements

3405.502 Authority.

Authority to approve publication of paid advertisements in newspapers is delegated to the HCA.

PART 3406—COMPETITION REQUIREMENTS

Sec.
3406.001 Applicability.

Subpart 3406.3—Other Than Full and Open Competition

3406.302–5 Authorized or required by statute.

Subpart 3406.5—Competition Advocates

3406.501 Requirement.

Authority: 5 U.S.C. 301; 41 U.S.C. 418(a) and (b); and 20 U.S.C. 1018a.

3406.001 Applicability.

(b) FSA—This part does not apply to proposed contracts and contracts awarded based on other than full and open competition when the conditions for successive systems modules set forth in 3417.70 are utilized.

Subpart 3406.3—Other Than Full and Open Competition

3406.302–5 Authorized or required by statute.

(a) *Authority.*

(1) Citations: 20 U.S.C. 1018a.

(2) Noncompetitive awards of successive modules for systems are permitted when the conditions set forth in 3417.70 are met.

Subpart 3406.5—Competition Advocates

3406.501 Requirement.

The Competition Advocate for the Department is the Deputy Director, Contracts and Acquisitions Management.

PART 3408—REQUIRED SOURCES OF SUPPLIES AND SERVICES

Subpart 3408.8—Acquisition of Printing and Related Supplies

Sec.
3408.870 Printing clause.
3408.871 Paperwork reduction.

Authority: 5 U.S.C. 301, unless otherwise noted.

Subpart 3408.8—Acquisition of Printing and Related Supplies

Authority: 44 U.S.C. 501.

3408.870 Printing clause.

The contracting officer must insert the clause at 3452.208–71 (Printing) in all solicitations and contracts other than purchase orders.

3408.871 Paperwork reduction.

The contracting officer must insert the clause at 3452.208–72 (Paperwork Reduction Act) in all solicitations and contracts in which the contractor will develop forms or documents for public use.

PART 3409—CONTRACTOR QUALIFICATIONS

Subpart 3409.4—Debarment, Suspension, and Ineligibility

Sec.
3409.400 Scope of subpart.
3409.401 Applicability.
3409.403 Definitions.
3409.406 Debarment.
3409.406–3 Procedures.
3409.407 Suspension.
3409.407–3 Procedures.

Subpart 3409.5—Organizational and Consultant Conflicts of Interest

3409.502 Applicability.

3409.503 Waiver.
3409.506 Procedures.
3409.507 Solicitation provision and contract clause.
3409.507–1 Solicitation provision.
3409.507–2 Contract clause.
3409.570 Certification at or below the simplified acquisition threshold.

Authority: 5 U.S.C. 301.

Subpart 3409.4—Debarment, Suspension, and Ineligibility

3409.400 Scope of subpart.

This subpart implements FAR subpart 9.4 by detailing policies and procedures governing the debarment and suspension of organizations and individuals from participating in ED contracts and subcontracts.

3409.401 Applicability.

This subpart applies to all procurement debarment and suspension actions initiated by ED. This subpart does not apply to nonprocurement debarment and suspension.

3409.403 Definitions.

The SPE is designated as the "debarring official" and "suspending official" as defined in FAR 9.403 and is designated as the agency official authorized to make the decisions required in FAR 9.406 and FAR 9.407.

3409.406 Debarment.

3409.406–3 Procedures.

(b) *Decision making process.*

(1) Contractors proposed for debarment may submit, in person, in writing, or through a representative, information and argument in opposition to the proposed debarment. The contractor must submit additional information within 30 days of receipt of the notice of proposal to debar, as described in FAR 9.406–3(c).

(2) In actions not based upon a conviction or civil judgment, if the contractor's submission in opposition raises a genuine dispute over facts material to the proposed debarment, the contractor may request a fact-finding conference. If the Debarring Official determines that there is a genuine dispute of material fact, the Debarring Official will conduct fact-finding and base the decision in accordance with FAR 9.406–3(b)(2) and (d)–(f).

3409.407 Suspension.

3409.407–3 Procedures.

(b) *Decision making process.*

(1) Contractors suspended in accordance with FAR 9.407 may submit, in person, in writing, or through a representative, information and argument in opposition to the suspension. The contractor must submit this information and argument within 30 days of receipt of the notice of suspension, as described in FAR 9.407–3(c).

(2) In actions not based upon an indictment, if the contractor's submission in opposition raises a genuine dispute over facts material to the suspension and if no determination has been made, on the basis of Department of Justice advice, that substantial interests of the Government in pending or contemplated legal proceedings based on the same facts as the suspension would be prejudiced, the contractor may request a fact-finding conference. The Suspending Official will conduct fact-finding and base the decision in accordance with FAR 9.407–3(b)(2) and (d) through (e).

Subpart 3409.5—Organizational and Consultant Conflicts of Interest

3409.502 Applicability.

This subpart applies to all ED contracts except contracts with other Federal agencies. However, this subpart applies to contracts with the Small Business Administration (SBA) under the 8(a) program.

3409.503 Waiver.

The HCA is designated as the official who may waive any general rule or procedure of FAR subpart 9.5 or of this subpart.

3409.506 Procedures.

(a) If the effects of a potential or actual conflict of interest cannot be avoided, neutralized, or mitigated before award, the prospective contractor is not eligible for that award. If a potential or actual conflict of interest is identified after award and the effects cannot be avoided, neutralized, or mitigated, ED will terminate the contract unless the HCA deems continued performance to be in the best interest of the Federal government.

(b) The HCA is designated as the official to conduct reviews and make final decisions under FAR 9.506(b) and (c).

3409.507 Solicitation provision and contract clause.

3409.507–1 Solicitation provision.

The contracting officer must insert the provision in 3452.209–70 (Conflict of interest certification) in all solicitations for services above the simplified acquisition threshold.

3409.507–2 Contract clause.

The contracting officer must insert the clause at 3452.209–71 (Conflict of interest) in all contracts for services above the simplified acquisition threshold. The clause is applicable to each order for services over the simplified acquisition threshold under task order contracts.

3409.570 Certification at or below the simplified acquisition threshold.

By accepting any contract, including orders against any Schedule or Government-wide Acquisition Contract (GWAC), with the Department at or below the simplified acquisition threshold:

(a) The contractor warrants that, to the best of the contractor's knowledge and belief, there are no relevant facts or circumstances that would give rise to an organizational conflict of interest, as defined in FAR subpart 2.1, or that the contractor has disclosed all such relevant information.

(b) The contractor agrees that if an actual or potential organizational conflict of interest is discovered after award, the contractor will make an immediate full disclosure in writing to the contracting officer. This disclosure must include a description of actions that the contractor has taken or proposes to take, after consultation with the contracting officer, to avoid, mitigate, or neutralize the actual or potential conflict.

(c) The contractor agrees that:

(1) The Government may terminate this contract for convenience, in whole or in part, if such termination is necessary to avoid an organizational conflict of interest.

(2) The Government may terminate this contract for default or pursue other remedies permitted by law or this contract if the contractor was aware or should have been aware of a potential organizational conflict of interest prior to award, or discovers or should have discovered an actual or potential conflict after award, and does not disclose, or misrepresents, relevant information to the contracting officer regarding the conflict.

(d) The contractor further agrees to insert provisions that substantially conform to the language of this section, including this paragraph (d), in any subcontract or consultant agreement hereunder.

PART 3412—ACQUISITION OF COMMERCIAL ITEMS

Subpart 3412.2—Special Requirements for the Acquisition of Commercial Items

Sec.
3412.203 Procedures for solicitation, evaluation, and award.

Subpart 3412.3—Solicitation Provisions and Contract Clauses for the Acquisition of Commercial Items

3412.302 Tailoring of provisions and clauses for the acquisition of commercial items.

Authority: 5 U.S.C. 301 and 20 U.S.C. 1018a.

Subpart 3412.2—Special Requirements for the Acquisition of Commercial Items

3412.203 Procedures for solicitation, evaluation, and award.

As specified in 3413.003, simplified acquisition procedures for commercial items may be used without regard to any dollar or timeframe limitations described in FAR 13.5 when acquired by the FSA and used for its purposes.

Subpart 3412.3—Solicitation Provisions and Contract Clauses for the Acquisition of Commercial Items

3412.302 Tailoring of provisions and clauses for the acquisition of commercial items.

The HCA is authorized to approve waivers in accordance with FAR 12.302(c). The approved waiver may be either for an individual contract or for a class of contracts for the specific item. The approved waiver and supporting documentation must be incorporated into the contract file.

SUBCHAPTER C—CONTRACTING METHODS AND CONTRACT TYPES

PART 3413—SIMPLIFIED ACQUISITION PROCEDURES

Sec.
3413.000 Scope of part.
3413.003 Policy.

Subpart 3413.3—Simplified Acquisition Methods

3413.303 Blanket purchase agreements (BPAs).
3413.303–5 Purchases under BPAs.

Authority: 5 U.S.C. 301 and 20 U.S.C. 1018a.

3413.000 Scope of part.

3413.003 Policy.

(c)(1)(iii) FSA—FSA may use simplified acquisition procedures for commercial items without regard to any dollar or timeframe limitations described in FAR 13.5.

(iv) FSA—FSA may use simplified acquisition procedures for non-commercial items up to $1,000,000 when the acquisition is set aside for small businesses, pursuant to 3419.502.

Subpart 3413.3—Simplified Acquisition Methods

3413.303 Blanket purchase agreements (BPAs).

3413.303–5 Purchases under BPAs.

(b) Individual purchases under blanket purchase agreements for commercial items may exceed the simplified acquisition threshold but shall not exceed the threshold for the test program for certain commercial items in FAR 13.500(a).

PART 3414—SEALED BIDDING

Subpart 3414.4—Opening of Bids and Award of Contract

Sec.
3414.407 Mistakes in bids.
3414.407–3 Other mistakes disclosed before award.

Authority: 5 U.S.C. 301.

Subpart 3414.4—Opening of Bids and Award of Contract

3414.407 Mistakes in bids.

3414.407–3 Other mistakes disclosed before award.

Authority is delegated to the HCA to make determinations under FAR 14.407–3(a) through (d).

PART 3415—CONTRACTING BY NEGOTIATION

Subpart 3415.2—Solicitation and Receipt of Proposals and Information

Sec.
3415.209 Solicitation provisions and contract clauses.

Subpart 3415.3—Source Selection

3415.302 Source selection objective.
3415.302–70 Two-phase source selection.

Subpart 3415.6—Unsolicited Proposals

3415.605 Content of unsolicited proposals.
3415.606 Agency procedures.

Authority: 5 U.S.C. 301 and 20 U.S.C. 1018a.

Subpart 3415.2—Solicitation and Receipt of Proposals and Information

3415.209 Solicitation provisions and contract clauses.

(a) The Freedom of Information Act (FOIA), 5 U.S.C. 552, may require ED to release data contained in an offeror's proposal even if the offeror has identified the data as restricted in accordance with the provision in FAR 52.215–1(e). The solicitation provision in 3452.215–70 (Release of restricted data) informs offerors that ED is required to consider release of restricted data under FOIA and Executive Order 12600.

(b) The contracting officer must insert the provision in 3452.215–70, in all solicitations that include a reference to FAR 52.215–1 (Instructions to Offerors—Competitive Acquisitions).

Subpart 3415.3—Source Selection

3415.302 Source selection objective.

3415.302–70 Two-phase source selection.

(a) FSA—May utilize a two-phase process to solicit offers and select a source for award. The contracting officer can choose to use this optional method of solicitation when deemed beneficial to the FSA in meeting its needs as a PBO.

(b) *Phase One.*

(1) The contracting officer must publish a notice in accordance with FAR 5.2, except that the notice must include limited information as specified in 3405.207.

(2) *Information Submitted by Offerors.* Each offeror must submit basic information such as the offeror's qualifications, the proposed conceptual approach, costs likely to be associated with the approach, and past performance data, together with any additional information requested by the contracting officer.

(3) *Selection for participating in second phase.* The contracting officer must select the offerors that are eligible to participate in the second phase of the process. The contracting officer must limit the number of the selected offerors to the number of sources that the contracting officer determines is appropriate and in the best interests of the Federal government.

(c) *Phase Two.*

(1) The contracting officer must conduct the second phase of the source selection consistent with FAR 15.2 and 15.3, except as provided by 3405.207.

(2) Only sources selected in the first phase will be eligible to participate in the second phase.

Subpart 3415.6—Unsolicited Proposals

3415.605 Content of unsolicited proposals.

(d) Each unsolicited proposal must contain the following certification:

Unsolicited Proposal Certification by Offeror

This is to certify, to the best of my knowledge and belief, that—

a. This proposal has not been prepared under Federal government supervision;

b. The methods and approaches stated in the proposal were developed by this offeror;

c. Any contact with employees of the Department of Education has been

within the limits of appropriate advance guidance set forth in FAR 15.604; and

d. No prior commitments were received from Departmental employees regarding acceptance of this proposal.

Date:

Organization:

Name:

Title:

(This certification must be signed by a responsible person authorized to enter into contracts on behalf of the organization.)

3415.606 Agency procedures.

(b)(1) The HCA or designee is the contact point to coordinate the receipt, control, and handling of unsolicited proposals.

(2) Offerors must direct unsolicited proposals to the HCA.

PART 3416—TYPES OF CONTRACTS

Subpart 3416.3—Cost-Reimbursement Contracts

Sec.
3416.303 Cost-sharing contracts.
3416.307 Contract clauses.

Subpart 3416.4—Incentive Contracts

3416.402 Application of predetermined, formula-type incentives.
3416.402–2 Performance incentives.
3416.470 Award-term contracting.

Subpart 3416.6—Time-and-Materials, Labor-Hour, and Letter Contracts

3416.603 Letter contracts.
3416.603–3 Limitations.

Authority: 5 U.S.C. 301 and 20 U.S.C. 1018a.

Subpart 3416.3—Cost-Reimbursement Contracts

3416.303 Cost-sharing contracts.

(b) *Application.* Costs that are not reimbursed under a cost-sharing contract may not be charged to the Federal government under any other grant, contract, cooperative agreement, or other arrangement.

3416.307 Contract clauses.

(a) If the clause at FAR 52.216–7 (Allowable Cost and Payment) is used in a contract with a hospital, the contracting officer must modify the clause by deleting the words "Subpart 31.2 of the Federal Acquisition Regulation (FAR)" from paragraph (a) and substituting "34 CFR part 74, Appendix E."

(b) The contracting officer must insert the clause at 3452.216–70 (Additional cost principles) in all solicitations of and resultant cost-reimbursement contracts with nonprofit organizations other than educational institutions, hospitals, or organizations listed in Attachment C to Office of Management and Budget Circular A–122.

Subpart 3416.4—Incentive Contracts

3416.402 Application of predetermined, formula-type incentives.

3416.402–2 Performance incentives.

(b) Award-term contracting may be used for performance-based contracts or task orders. *See* 3416.470 for the definition of *award-term contracting* and implementation guidelines.

3416.470 Award-term contracting.

(a) *Definition.* Award-term contracting is a method, based upon a pre-determined plan in the contract, to extend the contract term for superior performance and to reduce the contract term for substandard or poor performance.

(b) *Applicability.* A Contracting Officer may authorize use of an award-term incentive contract for acquisitions where the quality of contractor performance is of a critical or highly important nature. The basic contract term may be extended on the basis of the Federal government's determination of the excellence of the contractor's performance. Additional periods of performance, which are referred to herein as "award terms," are available for possible award to the contractor. As award term(s) are awarded, each additional period of performance will immediately follow the period of performance for which the award term was granted. The contract may end at the base period of performance if the Federal government determines that the contractor's performance does not reflect a level of performance as described in the award-term plan. Award-term periods may only be earned based on the evaluated quality of the performance of the contractor. Meeting the terms of the contract is not justification to award an award-term period. The use of an award-term plan does not exempt the contract from the requirements of FAR 17.207, with respect to performing due diligence prior to extending a contract term.

(c) *Approvals.* The Contracting Officer must justify the use of an award-term incentive contract in writing. The award-term plan approving official will be appointed by the HCA.

(d) *Disputes.* The Federal government unilaterally makes all decisions regarding award-term evaluations, points, methodology used to calculate points, and the degree of the contractor's success.

(e) *Award-term limitations.*

(1) Award periods may be earned during the base period of performance and each option period, except the last option period. Award-term periods may not be earned during the final option year of any contract.

(2) Award-term periods may not exceed twelve months.

(3) The potential award-term periods will be priced, evaluated, and considered in the initial contract selection process.

(f) *Implementation of extensions or reduced contract terms.*

(1) An award term is contingent upon a continuing need for the supplies or services and the availability of funds. Award terms may be cancelled prior to the start of the period of performance at no cost to the Federal government if there is not a continued need or available funding.

(2) The extension or reduction of the contract term is affected by a unilateral contract modification.

(3) Award-term periods occur after the period for which the award term was granted. Award-term periods effectively move option periods to later contract performance periods.

(4) Contractors have the right to decline the award of an award-term period. A contractor loses its ability to earn additional award terms if an earned Award-Term Period is declined.

(5) Changes to the contract award-term plan must be mutually agreed upon.

(g) *Clause.* Insert a clause substantially the same as the clause at 3452.216–71 (Award-term) in all solicitations and resulting contracts where an award-term incentive contract is anticipated.

Subpart 3416.6—Time-and-Materials, Labor-Hour, and Letter Contracts

3416.603 Letter contracts.

3416.603–3 Limitations.

If the HCA is to sign a letter contract as the contracting officer, the SPE signs the written determination under FAR 16.603–3.

PART 3417—SPECIAL CONTRACTING METHODS

Subpart 3417.2—Options

Sec.
3417.204 Contracts.
3417.207 Exercise of options.

Subpart 3417.5—Interagency Acquisitions Under the Economy Act

3417.502 General.

Subpart 3417.7—Modular Contracting

3417.70 Modular contracting.

Authority: 31 U.S.C. 1535 and 20 U.S.C. 1018a.

Subpart 3417.2—Options

3417.204 Contracts.

(e) Except as otherwise provided by law, contract periods that exceed the five-year limitation specified in FAR 17.204(e) must be approved by—

(1) The HCA for individual contracts; or

(2) The SPE for classes of contracts.

3417.207 Exercise of options.

If a contract provision allows an option to be exercised within a specified timeframe after funds become available, it must also specify that the date on which funds "become available" is the actual date funds become available to the contracting officer for obligation.

(f)(2) The Federal government may accept price reductions offered by contractors at any time during contract performance. Acceptance of price reductions offered by contractors will not be considered renegotiations as identified in this subpart if they were not initiated or requested by the Federal government.

Subpart 3417.5—Interagency Acquisitions Under the Economy Act

3417.502 General.

No other Federal department or agency may purchase property or services under contracts established or administered by FSA unless the purchase is approved by SPE for the requesting Federal department or agency.

Subpart 3417.7—Modular Contracting

3417.70 Modular contracting.

(a) FSA—May incrementally conduct successive procurements of modules of overall systems. Each module must be useful in its own right or useful in combination with the earlier procurement modules. Successive modules may be procured on a sole source basis under the following circumstances:

(1) Competitive procedures are used for awarding the contract for the first system module; and

(2) The solicitation for the first module included the following:

(i) A general description of the entire system that was sufficient to provide potential offerors with reasonable notice of the general scope of future modules;

(ii) Other sufficient information to enable offerors to make informed business decisions to submit offers for the first module; and

(iii) A statement that procedures, *i.e.,* the sole source awarding of follow-on modules, could be used for the subsequent awards.

SUBCHAPTER D—SOCIOECONOMIC PROGRAMS

PART 3419—SMALL BUSINESS PROGRAMS

Subpart 3419.2—Policies

Sec.
3419.201 General policy.
3419.201–70 Office of Small and Disadvantaged Business Utilization (OSDBU).

Subpart 3419.5—Set-Asides for Small Business

3419.502 Setting aside acquisitions.
3419.502–4 Methods of conducting set-asides.

Authority: 5 U.S.C. 301 and 20 U.S.C. 1018a.

Subpart 3419.2—Policies

3419.201 General policy.

3419.201–70 Office of Small and Disadvantaged Business Utilization (OSDBU).

The Office of Small and Disadvantaged Business Utilization (OSDBU), Office of the Deputy Secretary, is responsible for facilitating the implementation of the Small Business Act, as described in FAR 19.201. The OSDBU develops rules, policy, procedures, and guidelines for the effective administration of ED's small business program.

Subpart 3419.5—Set-Asides for Small Business

3419.502 Setting aside acquisitions.

3419.502–4 Methods of conducting set-asides.

(a) Simplified acquisition procedures as described in FAR Part 13 for the procurement of noncommercial services for FSA requirements may be used under the following circumstances:

(1) The procurement does not exceed $1,000,000;

(2) The procurement is conducted as a small business set-aside pursuant to section 15(a) of the Small Business Act;

(3) The price charged for supplies associated with the services are expected to be less than 20 percent of the total contract price;

(4) The procurement is competitive; and

(5) The procurement is not for construction.

PART 3422—APPLICATION OF LABOR LAWS TO GOVERNMENT ACQUISITIONS

Subpart 3422.10—Service Contract Act of 1965, as Amended

Sec.
3422.1002 Statutory requirements.
3422.1002–1 General.

Authority: 5 U.S.C. 301 Subpart 3422.10—Service Contract Act of 1965, as Amended

3422.1002 Statutory requirements.

3422.1002–1 General.

Consistent with 29 CFR 4.145, Extended term contracts, the five-year limitation set forth in the Service Contract Act of 1965, as amended (Service Contract Act), applies to each period of the contract individually, not the cumulative period of base and option periods. Accordingly, no contract subject to the Service Contract Act issued by the Department of Education will have a base period or option period that exceeds five years.

PART 3424—PROTECTION OF PRIVACY AND FREEDOM OF INFORMATION

Subpart 3424.1—Protection of Individual Privacy

Sec.
3424.103 Procedures.
3424.170 Protection of human subjects.

Subpart 3424.2—Freedom of Information Act

3424.201 Authority.
3424.203 Policy.

Authority: 5 U.S.C. 301.

Subpart 3424.1—Protection of Individual Privacy

3424.103 Procedures.

(a) If the Privacy Act of 1974 (Privacy Act) applies to a contract, the contracting officer must specify in the contract the disposition to be made of the system or systems of records upon completion of performance. For example, the contract may require the contractor to completely destroy the records, to remove personal identifiers, to turn the records over to ED, or to keep the records but take certain measures to keep the records confidential and protect the individual's privacy.

(b) If a notice of the system of records has not been published in the **Federal Register**, the contracting officer may proceed with the acquisition but must not award the contract until the notice is published, unless the contracting officer determines, in writing, that portions of the contract may proceed without maintaining information subject

to the Privacy Act. In this case, the contracting officer may—

(1) Award the contract, authorizing performance only of those portions not subject to the Privacy Act; and

(2) After the notice is published and effective, authorize performance of the remainder of the contract.

3424.170 Protection of human subjects.

In this subsection, "Research" means a systematic investigation, including research development, testing and evaluation, designed to develop or contribute to generalizable knowledge. (34 CFR 97.102(d)) Research is considered to involve human subjects when a researcher obtains information about a living individual through intervention or interaction with the individual or obtains personally identifiable private information about an individual. Some categories of research are exempt under the regulations, and the exemptions are in 34 CFR part 97.

(a) The contracting officer must insert the provision in 3452.224–71 (Notice about research activities involving human subjects) in any solicitation where a resultant contract will include, or is likely to include, research activities involving human subjects covered under 34 CFR part 97.

(b) The contracting officer must insert the clause at 3452.224–72 (Research activities involving human subjects) in any solicitation that includes the provision in 3452.224–71 (Notice about research activities involving human subjects) and in any resultant contract.

Subpart 3424.2—Freedom of Information Act

3424.201 Authority.

The Department's regulations implementing the Freedom of Information Act, 5 U.S.C. 552, are in 34 CFR part 5.

3424.203 Policy.

(a) [Reserved]

(b) The Department's policy is to release all information incorporated into a contract and documents that result from the performance of a contract to the public under the Freedom of Information Act. The release or withholding of documents requested will be made on a case-by-case basis. Contracting officers must advise offerors and prospective contractors of the possibility that their submissions may be released under the Freedom of Information Act, not withstanding any restrictions that are included at the time of proposal submission. A clause substantially the same as the clause at 3452.224–70 (Release of information under the Freedom of Information Act) must be included in all solicitations and contracts.

PART 3425—FOREIGN ACQUISITION

Subpart 3425.1—Buy American Act—Supplies

Sec.
3425.102 Exceptions.

Authority: 5 U.S.C. 301.

Subpart 3425.1—Buy American Act—Supplies

3425.102 Exceptions.

The HCA approves determinations under FAR 25.103(b)(2)(i).

SUBCHAPTER E—GENERAL CONTRACTING REQUIREMENTS

PART 3427—PATENTS, DATA, AND COPYRIGHTS

Subpart 3427.4—Rights in Data and Copyrights

Sec.
3427.409 Solicitation provisions and contract clauses.

Authority: 5 U.S.C. 301.

Subpart 3427.4—Rights in Data and Copyrights

3427.409 Solicitation provisions and contract clauses.

(a) The contracting officer must insert the clause at 3452.227–70 (Publication and publicity) in all solicitations and contracts other than purchase orders.

(b) The contracting officer must insert the clause at 3452.227–71 (Advertising of awards) in all solicitations and contracts other than purchase orders.

(c) The contracting officer must insert the clause at 3452.227–72 (Use and non-disclosure agreement) in all contracts over the simplified acquisition threshold, and in contracts under the simplified acquisition threshold, as appropriate.

(d) The contracting officer must insert the clause at 3452.227–73 (Limitations on the use or disclosure of Government-furnished information marked with restrictive legends) in all contracts of third party vendors who require access to Government-furnished information including other contractors' technical data, proprietary information, or software.

PART 3428—BONDS AND INSURANCE

Subpart 3428.3—Insurance

Sec.
3428.311 Solicitation provision and contract clause on liability insurance under cost-reimbursement contracts.
3428.311–2 Contract clause.

Authority: 5 U.S.C. 301.

Subpart 3428.3—Insurance

3428.311 Solicitation provision and contract clause on liability insurance under cost-reimbursement contracts.

3428.311–2 Contract clause.

The contracting officer must insert the clause at 3452.228–70 (Required insurance) in all solicitations and resultant cost-reimbursement contracts.

PART 3432—CONTRACT FINANCING

Subpart 3432.4—Advance Payments for Non-Commercial Items

Sec.
3432.402 General.
3432.407 Interest.

Subpart 3432.7—Contract Funding

3432.705 Contract clauses.
3432.705–2 Clauses for limitation of cost or funds.

Authority: 5 U.S.C. 301.

Subpart 3432.4—Advance Payments for Non-Commercial Items

3432.402 General.

The HCA is delegated the authority to make determinations under FAR 32.402(c)(1)(iii). This authority may not be redelegated.

3432.407 Interest.

The HCA is designated as the official who may authorize advance payments without interest under FAR 32.407(d).

Subpart 3432.7—Contract Funding

3432.705 Contract clauses.

3432.705–2 Clauses for limitation of cost or funds.

(a) The contracting officer must insert the clause at 3452.232–70 (Limitation of cost or funds) in all solicitations and contracts where a Limitation of cost or Limitation of funds clause is utilized.

(b) The contracting officer must insert the provision in 3452.232–71 (Incremental funding) in a solicitation if a cost-reimbursement contract using incremental funding is contemplated.

PART 3433—PROTESTS, DISPUTES, AND APPEALS

Subpart 3433.1—Protests

Sec.
3433.103 Protests to the agency.

Authority: 5 U.S.C. 301.

Subpart 3433.1—Protests

3433.103 Protests to the agency.

(f)(3) The contracting officer's HCA must approve the justification or determination to continue performance.

The criteria in FAR 33.103(f)(3) must be followed in making the determination to award a contract before resolution of a protest.

SUBCHAPTER F—SPECIAL CATEGORIES OF CONTRACTING

PART 3437—SERVICE CONTRACTING

Subpart 3437.1—Service Contracts—General

Sec.
3437.102 Policy.
3437.170 Observance of administrative closures

Subpart 3437.2—Advisory and Assistance Services

3437.270 Services of consultants clauses.

Subpart 3437.6—Performance-Based Acquisition

3437.670 Contract type.

Authority: 5 U.S.C. 301 and 20 U.S.C. 1018a.

Subpart 3437.1—Service Contracts—General

3437.102 Policy.

If a service contract requires one or more end items of supply, FAR Subpart 37.1 and this subpart apply only to the required services.

3437.170 Observance of administrative closures.

The contracting officer must insert the clause at 3452.237–71 (Observance of administrative closures) in all solicitations and contracts for services.

Subpart 3437.2—Advisory and Assistance Services

3437.270 Services of consultants clause.

The contracting officer must insert the clause at 3452.237–70 (Services of consultants) in all solicitations and resultant cost-reimbursement contracts that do not provide services to FSA.

Subpart 3437.6—Performance-Based Acquisition

3437.670 Contract type.

Award-term contracting may be used for performance-based contracts and task orders that provide opportunities for significant improvements and benefits to the Department. Use of award-term contracting must be approved in advance by the HCA.

PART 3439—ACQUISITION OF INFORMATION TECHNOLOGY

Subpart 3439.70—Department Requirements for Acquisition of Information Technology

Sec.
3439.701 Internet Protocol version 6.
3439.702 Department security requirements.
3439.703 Federal desktop core configuration (FDCC) compatibility.

Authority: 5 U.S.C. 301 and 20 U.S.C. 1018a.

Subpart 3439.70—Department Requirements for Acquisition of Information Technology

3439.701 Internet Protocol version 6.

The contracting officer must insert the clause at 3452.239–70 (Internet protocol version 6 (IPv6)) in all solicitations and resulting contracts for hardware and software.

3439.702 Department security requirements.

The contracting officer must include the solicitation provision in 3452.239–71 (Notice to offerors of Department security requirements) and the clause at 3452.239–72 (Department security requirements) when contractor employees will have access to Department-controlled facilities or space, or when the work (wherever located) involves the design, operation, repair, or maintenance of information systems and access to sensitive but unclassified information.

3439.703 Federal desktop core configuration (FDCC) compatibility.

The contracting officer must include the clause at 3452.239–73 (Federal desktop core configuration (FDCC) compatibility) in all solicitations and contracts where software will be developed, maintained, or operated on any system using the FDCC configuration.

SUBCHAPTER G—CONTRACT MANAGEMENT

PART 3442—CONTRACT ADMINISTRATION AND AUDIT SERVICES

Subpart 3442.70—Contract Monitoring

Sec.
3442.7001 Litigation and claims clause.
3442.7002 Delays.

Subpart 3442.71—Accessibility of Meetings, Conferences, and Seminars to Persons with Disabilities

3442.7101 Policy and clause.

Authority: 5 U.S.C. 301.

Subpart 3442.70—Contract Monitoring

3442.7001 Litigation and claims clause.

The contracting officer must insert the clause at 3452.242–70 (Litigation and claims) in all solicitations and resultant cost-reimbursement contracts.

3442.7002 Delays.

The contracting officer must insert the clause at 3452.242–71 (Notice to the Government of delays) in all solicitations and contracts other than purchase orders.

Subpart 3442.71—Accessibility of Meetings, Conferences, and Seminars to Persons with Disabilities

3442.7101 Policy and clause.

(a) It is the policy of ED that all meetings, conferences, and seminars be accessible to persons with disabilities.

(b) The contracting officer must insert the clause at 3452.242–73 (Accessibility of meetings, conferences, and seminars to persons with disabilities) in all solicitations and contracts.

PART 3443—CONTRACT MODIFICATIONS

Subpart 3443.1—General

Sec.
3443.107 Contract clause.

Authority: 5 U.S.C. 301.

Subpart 3443.1—General

3443.107 Contract clause.

The contracting officer must insert a clause substantially the same as 3452.243–70 (Key personnel) in all solicitations and resultant cost-reimbursement contracts in which it will be essential for the contracting officer to be notified that a change of designated key personnel is to take place by the contractor.

PART 3445—GOVERNMENT PROPERTY

Subpart 3445.4—Contractor Use and Rental of Government Property

Sec.
3445.405 Contracts with foreign governments or international organizations.

Authority: 5 U.S.C. 301.

Subpart 3445.4—Contractor Use and Rental of Government Property

3445.405 Contracts with foreign governments or international organizations.

Requests by, or for the benefit of, foreign governments or international organizations to use ED production and research property must be approved by the HCA. The HCA must determine the amount of cost to be recovered or rental charged, if any, based on the facts and circumstances of each case.

PART 3447—TRANSPORTATION

Subpart 3447.7—Foreign Travel

Sec.
3447.701 Foreign travel clause.

Authority: 5 U.S.C. 301.

Subpart 3447.7—Foreign Travel

3447.701 Foreign travel clause.

The contracting officer must insert the clause at 3452.247–70 (Foreign travel) in all solicitations and resultant cost-reimbursement contracts.

SUBCHAPTER H—CLAUSES AND FORMS

PART 3452—SOLICITATION PROVISIONS AND CONTRACT CLAUSES

Subpart 3452.2—Text of Provisions and Clauses

Sec.
3452.201–70 Contracting Officer's Representative (COR).
3452.202–1 Definitions—Department of Education.
3452.208–71 Printing.
3452.208–72 Paperwork Reduction Act.
3452.209–70 Conflict of interest. certification.
3452.209–71 Conflict of interest.
3452.215–70 Release of restricted data.
3452.216–70 Additional cost principles.
3452.216–71 Award-Term.
3452.224–70 Release of information under the Freedom of Information Act.
3452.224–71 Notice about research activities involving human subjects.
3452.224–72 Research activities involving human subjects.
3452.227–70 Publication and publicity.
3452.227–71 Advertising of awards.
3452.227–72 Use and non-disclosure agreement.
3452.227–73 Limitations on the use or disclosure of Government-furnished information marked with restrictive legends.
3452.228–70 Required insurance.
3452.232–70 Limitation of cost or funds.
3452.232–71 Incremental funding.
3452.237–70 Services of consultants.
3452.237–71 Observance of administrative closures.
3452.239–70 Internet protocol version 6 (IPv6).
3452.239–71 Notice to offerors of Department security requirements.
3452.239–72 Department security requirements.
3452.239–73 Federal desktop core configuration (FDCC) compatibility.
3452.242–70 Litigation and claims.
3452.242–71 Notice to the Government of delays.
3452.242–73 Accessibility of meetings, conferences, and seminars to persons with disabilities.
3452.243–70 Key personnel.
3452.247–70 Foreign travel.

Authority: 5 U.S.C. 301.

Subpart 3452.2—Text of Provisions and Clauses

3452.201–70 Contracting Officer's Representative (COR).

As prescribed in 3401.670–3, insert a clause substantially the same as:

Contracting officer's Representative (COR) (MAR 2011)

(a) The Contracting Officer's Representative (COR) is responsible for the technical aspects of the project, technical liaison with the contractor, and any other responsibilities that are specified in the contract. These responsibilities include inspecting all deliverables, including reports, and recommending acceptance or rejection to the contracting officer.

(b) The COR is not authorized to make any commitments or otherwise obligate the Government or authorize any changes that affect the contract price, terms, or conditions. Any contractor requests for changes shall be submitted in writing directly to the contracting officer or through the COR. No such changes shall be made without the written authorization of the contracting officer.

(c) The COR's name and contact information:

(d) The COR may be changed by the Government at any time, but notification of the change, including the name and address of the successor COR, will be provided to the contractor by the contracting officer in writing.

(End of Clause)

3452.202–1 Definitions—Department of Education.

As prescribed in 3402.201, insert the following clause in solicitations and contracts in which the clause at FAR 52.202–1 is required.

Definitions—Department of Education (MAR 2011)

(a) The definitions at FAR 2.101 are appended with those contained in Education Department Acquisition Regulations (EDAR) 3402.101.

(b) The EDAR is available via the Internet at *http://www.ed.gov/policy/fund/reg/clibrary/edar.html.*

(End of Clause)

3452.208–71 Printing.

As prescribed in 3408.870, insert the following clause in all solicitations and contracts other than purchase orders:

Printing (MAR 2011)

Unless otherwise specified in this contract, the contractor shall not engage in, nor subcontract for, any printing (as that term is defined in Title I of the Government Printing and Binding Regulations in effect on the effective date of this contract) in connection with the performance of work under this contract; except that performance involving the duplication of fewer than 5,000 units of any one page, or fewer than 25,000 units in the aggregate of multiple pages, shall not be deemed to be printing. A unit is defined as one side of one sheet, one color only (with black counting as a color), with a maximum image size of 10¾ by 14¼ inches on a maximum paper size of 11 by 17 inches. Examples of counting the number of units: black plus one additional color on one side of one page counts as two units. Three colors (including black) on two sides of one page count as six units.

(End of Clause)

3452.208–72 Paperwork Reduction Act.

As prescribed in 3408.871, insert the following clause in all relevant solicitations and contracts:

Paperwork Reduction Act (MAR 2011)

(a) The Paperwork Reduction Act of 1995 applies to contractors that collect information for use or disclosure by the Federal government. If the contractor will collect information requiring answers to identical questions from 10 or more people, no plan, questionnaire, interview guide, or other similar device for collecting information may be used without first obtaining clearance from the Chief Acquisition Officer (CAO) or the CAO's designee within the Department of Education (ED) and the Office of Management and Budget (OMB). Contractors and Contracting Officers' Representatives shall be guided by the provisions of 5 CFR part 1320, Controlling Paperwork Burdens on the Public, and should seek the advice of the Department's Paperwork Clearance Officer to determine the procedures for acquiring CAO and OMB clearance.

(b) The contractor shall obtain the required clearances through the Contracting Officer's Representative before expending any funds or making public contacts for the collection of information described in paragraph (a) of this clause. The authority to expend funds and proceed with the collection shall be in writing by the contracting officer. The contractor must plan at least 120 days for CAO and OMB clearance. Excessive delay caused by the Government that arises out of causes beyond the control and without the fault or negligence of the contractor will be considered in accordance with the Excusable Delays or Default clause of this contract.

(End of Clause)

3452.209–70 Conflict of interest certification.

As prescribed in 3409.507–1, insert the following provision in all solicitations anticipated to result in contract actions for services above the simplified acquisition threshold:

Conflict of Interest Certification (MAR 2011)

(a)(1) The contractor, subcontractor, employee, or consultant, by signing the form in this clause, certifies that, to the best of its knowledge and belief, there are no relevant facts or circumstances that could give rise to an organizational or personal conflict of interest, (*see* FAR Subpart 9.5 for

organizational conflicts of interest) (or apparent conflict of interest), for the organization or any of its staff, and that the contractor, subcontractor, employee, or consultant has disclosed all such relevant information if such a conflict of interest appears to exist to a reasonable person with knowledge of the relevant facts (or if such a person would question the impartiality of the contractor, subcontractor, employee, or consultant). Conflicts may arise in the following situations:

(i) *Unequal access to information.* A potential contractor, subcontractor, employee, or consultant has access to non-public information through its performance on a government contract.

(ii) *Biased ground rules.* A potential contractor, subcontractor, employee, or consultant has worked, in one government contract, or program, on the basic structure or ground rules of another government contract.

(iii) *Impaired objectivity.* A potential contractor, subcontractor, employee, or consultant, or member of their immediate family (spouse, parent, or child) has financial or other interests that would impair, or give the appearance of impairing, impartial judgment in the evaluation of government programs, in offering advice or recommendations to the government, or in providing technical assistance or other services to recipients of Federal funds as part of its contractual responsibility. "Impaired objectivity" includes but is not limited to the following situations that would cause a reasonable person with knowledge of the relevant facts to question a person's objectivity:

(A) Financial interests or reasonably foreseeable financial interests in or in connection with products, property, or services that may be purchased by an educational agency, a person, organization, or institution in the course of implementing any program administered by the Department;

(B) Significant connections to teaching methodologies or approaches that might require or encourage the use of specific products, property, or services; or

(C) Significant identification with pedagogical or philosophical viewpoints that might require or encourage the use of a specific curriculum, specific products, property, or services.

(2) Offerors must provide the disclosure described above on any actual or potential conflict of interest (or apparent conflict of interest) regardless of their opinion that such a conflict or potential conflict (or apparent conflict of interest) would not impair their objectivity.

(3) In a case in which an actual or potential conflict (or apparent conflict of interest) is disclosed, the Department will take appropriate actions to eliminate or address the actual or potential conflict, including but not limited to mitigating or neutralizing the conflict, when appropriate, through such means as ensuring a balance of views, disclosure with the appropriate disclaimers, or by restricting or modifying the work to be performed to avoid or reduce the conflict. In this clause, the term "potential conflict" means reasonably foreseeable conflict of interest.

(b) The contractor, subcontractor, employee, or consultant agrees that if "impaired objectivity", or an actual or potential conflict of interest (or apparent conflict of interest) is discovered after the award is made, it will make a full disclosure in writing to the contracting officer. This disclosure shall include a description of actions that the contractor has taken or proposes to take to avoid, mitigate, or neutralize the actual or potential conflict (or apparent conflict of interest).

(c) *Remedies.* The Government may terminate this contract for convenience, in whole or in part, if it deems such termination necessary to avoid the appearance of a conflict of interest. If the contractor was aware of a potential conflict of interest prior to award or discovered an actual or potential conflict after award and did not disclose or misrepresented relevant information to the contracting officer, the Government may terminate the contract for default, or pursue such other remedies as may be permitted by law or this contract. These remedies include imprisonment for up to five years for violation of 18 U.S.C. 1001 and fines of up to $5000 for violation of 31 U.S.C. 3802. Further remedies include suspension or debarment from contracting with the Federal government. The contractor may also be required to reimburse the Department for costs the Department incurs arising from activities related to conflicts of interest. An example of such costs would be those incurred in processing Freedom of Information Act requests related to a conflict of interest.

(d) In cases where remedies short of termination have been applied, the contractor, subcontractor, employee, or consultant agrees to eliminate the organizational conflict of interest, or mitigate it to the satisfaction of the contracting officer.

(e) The contractor further agrees to insert in any subcontract or consultant agreement hereunder, provisions that conform substantially to the language of this clause, including specific mention of potential remedies and this paragraph (e).

(f) *Conflict of Interest Certification.*

The offeror, [insert name of offeror], hereby certifies that, to the best of its knowledge and belief, there are no present or currently planned interests (financial, contractual, organizational, or otherwise) relating to the work to be performed under the contract or task order resulting from Request for Proposal No. [insert number] that would create any actual or potential conflict of interest (or apparent conflicts of interest) (including conflicts of interest for immediate family members: spouses, parents, children) that would impinge on its ability to render impartial, technically sound, and objective assistance or advice or result in it being given an unfair competitive advantage. In this clause, the term "potential conflict" means reasonably foreseeable conflict of interest. The offeror further certifies that it has and will continue to exercise due diligence in identifying and removing or mitigating, to the Government's satisfaction, such conflict of interest (or apparent conflict of interest).

Offeror's Name _____

RFP/Contract No. _____

Signature _____

Title _____

Date _____

(End of Clause)

3452.209–71 Conflict of interest.

As prescribed in 3409.507–2, insert the following clause in all contracts for services above the simplified acquisition threshold:

Conflict of Interest (MAR 2011)

(a)(1) The contractor, subcontractor, employee, or consultant, has certified that, to the best of its knowledge and belief, there are no relevant facts or circumstances that could give rise to an organizational or personal conflict of interest (*see* FAR Subpart 9.5 for organizational conflicts of interest) (or apparent conflict of interest) for the organization or any of its staff, and that the contractor, subcontractor, employee, or consultant has disclosed all such relevant information if such a conflict of interest appears to exist to a reasonable person with knowledge of the relevant facts (or if such a person would question the impartiality of the contractor, subcontractor, employee, or consultant). Conflicts may arise in the following situations:

(i) *Unequal access to information*—A potential contractor, subcontractor, employee, or consultant has access to non-public information through its performance on a government contract.

(ii) *Biased ground rules*—A potential contractor, subcontractor, employee, or consultant has worked, in one government contract, or program, on the basic structure or ground rules of another government contract.

(iii) *Impaired objectivity*—A potential contractor, subcontractor, employee, or consultant, or member of their immediate family (spouse, parent, or child) has financial or other interests that would impair, or give the appearance of impairing, impartial judgment in the evaluation of government programs, in offering advice or recommendations to the government, or in providing technical assistance or other services to recipients of Federal funds as part of its contractual responsibility. "Impaired objectivity" includes but is not limited to the following situations that would cause a reasonable person with knowledge of the relevant facts to question a person's objectivity:

(A) Financial interests or reasonably foreseeable financial interests in or in connection with products, property, or services that may be purchased by an educational agency, a person, organization, or institution in the course of implementing any program administered by the Department;

(B) Significant connections to teaching methodologies that might require or encourage the use of specific products, property, or services; or

(C) Significant identification with pedagogical or philosophical viewpoints that

might require or encourage the use of a specific curriculum, specific products, property, or services.

(2) Offerors must provide the disclosure described above on any actual or potential conflict (or apparent conflict of interest) of interest regardless of their opinion that such a conflict or potential conflict (or apparent conflict of interest) would not impair their objectivity.

(3) In a case in which an actual or potential conflict (or apparent conflict of interest) is disclosed, the Department will take appropriate actions to eliminate or address the actual or potential conflict (or apparent conflict of interest), including but not limited to mitigating or neutralizing the conflict, when appropriate, through such means as ensuring a balance of views, disclosure with the appropriate disclaimers, or by restricting or modifying the work to be performed to avoid or reduce the conflict. In this clause, the term "potential conflict" means reasonably foreseeable conflict of interest.

(b) The contractor, subcontractor, employee, or consultant agrees that if "impaired objectivity", or an actual or potential conflict of interest (or apparent conflict of interest) is discovered after the award is made, it will make a full disclosure in writing to the contracting officer. This disclosure shall include a description of actions that the contractor has taken or proposes to take, after consultation with the contracting officer, to avoid, mitigate, or neutralize the actual or potential conflict (or apparent conflict of interest).

(c) *Remedies.* The Government may terminate this contract for convenience, in whole or in part, if it deems such termination necessary to avoid the appearance of a conflict of interest. If the contractor was aware of a potential conflict of interest prior to award or discovered an actual or potential conflict (or apparent conflict of interest) after award and did not disclose or misrepresented relevant information to the contracting officer, the Government may terminate the contract for default, or pursue such other remedies as may be permitted by law or this contract. These remedies include imprisonment for up to five years for violation of 18 U.S.C. 1001 and fines of up to $5,000 for violation of 31 U.S.C. 3802. Further remedies include suspension or debarment from contracting with the Federal government. The contractor may also be required to reimburse the Department for costs the Department incurs arising from activities related to conflicts of interest. An example of such costs would be those incurred in processing Freedom of Information Act requests related to a conflict of interest.

(d) In cases where remedies short of termination have been applied, the contractor, subcontractor, employee, or consultant agrees to eliminate the organizational conflict of interest, or mitigate it to the satisfaction of the contracting officer.

(e) The contractor further agrees to insert in any subcontract or consultant agreement hereunder, provisions that conform substantially to the language of this clause, including specific mention of potential remedies and this paragraph (e).

(End of Clause)

3452.215–70 Release of restricted data.

As prescribed in 3415.209, insert the following provision in solicitations:

Release of Restricted Data (MAR 2011)

(a) Offerors are hereby put on notice that regardless of their use of the legend set forth in FAR 52.215–1(e), Restriction on Disclosure and Use of Data, the Government may be required to release certain data contained in the proposal in response to a request for the data under the Freedom of Information Act (FOIA). The Government's determination to withhold or disclose a record will be based upon the particular circumstance involving the data in question and whether the data may be exempted from disclosure under FOIA. In accordance with Executive Order 12600 and to the extent permitted by law, the Government will notify the offeror before it releases restricted data.

(b) By submitting a proposal or quotation in response to this solicitation:

(1) The offeror acknowledges that the Department may not be able to withhold or deny access to data requested pursuant to FOIA and that the Government's FOIA officials shall make that determination;

(2) The offeror agrees that the Government is not liable for disclosure if the Department has determined that disclosure is required by FOIA;

(3) The offeror acknowledges that proposals not resulting in a contract remain subject to FOIA; and

(4) The offeror agrees that the Government is not liable for disclosure or use of unmarked data and may use or disclose the data for any purpose, including the release of the information pursuant to requests under FOIA.

(c) Offerors are cautioned that the Government reserves the right to reject any proposal submitted with:

(1) A restrictive legend or statement differing in substance from the one required by the solicitation provision in FAR 52.215–1(e), Restriction on Disclosure and Use of Data, or

(2) A statement taking exceptions to the terms of paragraphs (a) or (b) of this provision.

(End of Provision)

3452.216–70 Additional cost principles.

Insert the following clause in solicitations and contracts as prescribed in 3416.307(b):

Additional Cost Principles (MAR 2011)

(a) *Bid and Proposal Costs.* Bid and proposal costs are the immediate costs of preparing bids, proposals, and applications for potential Federal and non-Federal grants, contracts, and other agreements, including the development of scientific, cost, and other data needed to support the bids, proposals, and applications. Bid and proposal costs of the current accounting period are allowable as indirect costs; bid and proposal costs of past accounting periods are unallowable as costs of the current period. However, if the organization's established practice is to treat these costs by some other method, they may be accepted if they are found to be reasonable and equitable. Bid and proposal costs do not include independent research and development costs or pre-award costs.

(b) *Independent research and development costs.* Independent research and development is research and development that is not sponsored by Federal and non-Federal grants, contracts, or other agreements. Independent research and development shall be allocated its proportionate share of indirect costs on the same basis as the allocations of indirect costs of sponsored research and development. The costs of independent research and development, including its proportionate share of indirect costs, are unallowable.

(End of Clause)

3452.216–71 Award-Term.

As prescribed in 3416.470, insert a clause substantially the same as the following in all solicitations and contracts where an award-term arrangement is anticipated:

Award–Term (MAR 2011)

(a) The initial [insert initial contract term] contract term or ordering period may be extended or reduced on the basis of contractor performance, resulting in a contract term or an ordering period lasting at least [insert minimum contract term] years from the date of contract award, to a maximum of [insert maximum contract term] years after the date of contract award.

(b) The contractor's performance will be measured against stated standards by the performance monitors, who will report their findings to the Award Term Determining Official (or Board).

(c) Bilateral changes may be made to the award-term plan at any time. If agreement cannot be made within 60 days, the Government reserves the right to make unilateral changes prior to the start of an award-term period.

(d) The contractor will submit a brief written self-evaluation of its performance within X days after the end of the evaluation period. The self-evaluation report shall not exceed seven pages, and it may be considered in the Award Term Review Board's (ATRB's) (or Term Determining Official's) evaluation of the contractor's performance during this period.

(e) The contract term or ordering period may be unilaterally modified to reflect the ATRB's decision. If the contract term or ordering period has one year remaining, the operation of the contract award-term feature will cease and the contract term or ordering period will not extend beyond the maximum term stated in the contract.

(f) Award terms that have not begun may be cancelled (rather than terminated), should the need for the items or services no longer exists. No equitable adjustments to the contract price are applicable, as this is not the same procedure as a termination for convenience.

(g) The decisions made by the ATRB or Term Determining Official may be made

unilaterally. Alternate Dispute Resolution procedures shall be utilized when appropriate.

(End of Clause)

3452.224–70 Release of information under the Freedom of Information Act.

As prescribed in 3424.203, insert the following clause in solicitations and contracts.

Release of Information Under the Freedom of Information Act (MAR 2011)

By entering into a contract with the Department of Education, the contractor, without regard to proprietary markings, approves the release of the entire contract and all related modifications and task orders including, but not limited to:

(1) Unit prices, including labor rates;

(2) Statements of Work/Performance Work Statements generated by the contractor;

(3) Performance requirements, including incentives, performance standards, quality levels, and service level agreements;

(4) Reports, deliverables, and work products delivered in performance of the contract (including quality of service, performance against requirements/standards/service level agreements);

(5) Any and all information, data, software, and related documentation first provided under the contract;

(6) Proposals or portions of proposals incorporated by reference; and

(7) Other terms and conditions.

(End of Clause)

3452.224–71 Notice about research activities involving human subjects.

As prescribed in 3424.170, insert the following provision in any solicitation where a resultant contract will include, or is likely to include, research activities involving human subjects covered under 34 CFR part 97:

Notice About Research Activities Involving Human Subjects (MAR 2011)

(a) *Applicable Regulations.* In accordance with Department of Education regulations on the protection of human subjects, title 34, Code of Federal Regulations, part 97 ("the regulations"), the contractor, any subcontractors, and any other entities engaged in covered (nonexempt) research activities are required to establish and maintain procedures for the protection of human subjects.

(b) *Definitions.* (1) The regulations define *research* as "a systematic investigation, including research development, testing and evaluation, designed to develop or contribute to generalizable knowledge." (34 CFR 97.102(d)). If an activity follows a deliberate plan designed to develop or contribute to generalizable knowledge, it is research. Research includes activities that meet this definition, whether or not they are conducted under a program considered research for other purposes. For example, some demonstration and service programs may include research activities.

(2) The regulations define a *human subject* as a living individual about whom an investigator (whether professional or student) conducting research obtains data through intervention or interaction with the individual, or obtains identifiable private information. (34 CFR 97.102(f)). The definition of a human subject is met if an activity involves obtaining—

(i) Information about a living person by—

(A) Manipulating that person's environment, as might occur when a new instructional technique is tested; or

(B) Communicating or interacting with the individual, as occurs with surveys and interviews; or

(ii) Private information about a living person in such a way that the information can be linked to that individual (the identity of the subject is or may be readily determined by the investigator or associated with the information). Private information includes information about behavior that occurs in a context in which an individual can reasonably expect that no observation or recording is taking place, and information that has been provided for specific purposes by an individual and that an individual can reasonably expect will not be made public (for example, a school health record).

(c) *Exemptions.* The regulations provide exemptions from coverage for activities in which the only involvement of human subjects will be in one or more of the categories set forth in 34 CFR 97.101(b)(1)–(6). However, if the research subjects are children, the exemption at 34 CFR 97.101(b)(2) (*i.e.,* research involving the use of educational tests, survey procedures, interview procedures or observation of public behavior) is modified by 34 CFR 97.401(b), as explained in paragraph (d) of this provision. Research studies that are conducted under a Federal statute that requires without exception that the confidentiality of the personally identifiable information will be maintained throughout the research and thereafter, *e.g.,* the Institute of Education Sciences confidentiality statute, 20 U.S.C. 9573, are exempt under 34 CFR 97.101(b)(3)(ii).

(d) *Children as research subjects.* Paragraph (a) of 34 CFR 97.402 of the regulations defines *children* as "persons who have not attained the legal age for consent to treatments or procedures involved in the research, under the applicable law of the jurisdiction in which the research will be conducted." Paragraph (b) of 34 CFR 97.401 of the regulations provides that, if the research involves children as subjects—

(1) The exemption in 34 CFR 97.101(b)(2) does not apply to activities involving—

(i) Survey or interview procedures involving children as subjects; or

(ii) Observations of public behavior of children in which the investigator or investigators will participate in the activities being observed.

(2) The exemption in 34 CFR 97.101(b)(2) continues to apply, unmodified by 34 CFR 97.401(b), to—

(i) Educational tests; and

(ii) Observations of public behavior in which the investigator or investigators will not participate in the activities being observed.

(e) *Proposal Instructions.* An offeror proposing to do research that involves human subjects must provide information to the Department on the proposed exempt and nonexempt research activities. The offeror should submit this information as an attachment to its technical proposal. No specific page limitation applies to this requirement, but the offeror should be brief and to the point.

(1) For exempt research activities involving human subjects, the offeror should identify the exemption(s) that applies and provide sufficient information to allow the Department to determine that the designated exemption(s) is appropriate. Normally, the narrative on the exemption(s) can be provided in one paragraph.

(2) For nonexempt research activities involving human subjects, the offeror must cover the following seven points in the information it provides to the Department:

(i) *Human subjects' involvement and characteristics:* Describe the characteristics of the subject population, including their anticipated number, age range, and health status. Identify the criteria for inclusion or exclusion of any subpopulation. Explain the rationale for the involvement of special classes of subjects, such as children, children with disabilities, adults with disabilities, persons with mental disabilities, pregnant women, institutionalized individuals, or others who are likely to be vulnerable.

(ii) *Sources of materials:* Identify the sources of research material obtained from or about individually identifiable living human subjects in the form of specimens, records, or data.

(iii) *Recruitment and informed consent:* Describe plans for the recruitment of subjects and the consent procedures to be followed.

(iv) *Potential risks:* Describe potential risks (physical, psychological, social, financial, legal, or other) and assess their likelihood and seriousness. Where appropriate, discuss alternative treatments and procedures that might be advantageous to the subjects.

(v) *Protection against risk:* Describe the procedures for protecting against or minimizing potential risks, including risks to confidentiality, and assess their likely effectiveness. Where appropriate, discuss provisions for ensuring necessary medical or professional intervention in the event of adverse effects to the subjects. Also, where appropriate, describe the provisions for monitoring the data collected to ensure the safety of the subjects.

(vi) *Importance of knowledge to be gained:* Discuss why the risks to the subjects are reasonable in relation to the importance of the knowledge that may reasonably be expected to result.

(vii) *Collaborating sites:* If research involving human subjects will take place at collaborating site(s), name the sites and briefly describe their involvement or role in the research. Normally, the seven-point narrative can be provided in two pages or less.

(3) If a reasonable potential exists that a need to conduct research involving human subjects may be identified after award of the

contract and the offeror's proposal contains no definite plans for such research, the offeror should briefly describe the circumstances and nature of the potential research involving human subjects.

(f) *Assurances and Certifications.* (1) In accordance with the regulations and the terms of this provision, all contractors and subcontractors that will be engaged in covered human subjects research activities shall be required to comply with the requirements for Assurances and Institutional Review Board approvals, as set forth in the contract clause 3452.224–72 (Research activities involving human subjects).

(2) The contracting officer reserves the right to require that the offeror have or apply for the assurance and provide documentation of Institutional Review Board (IRB) approval of the research prior to award.

(g)(1) The regulations, and related information on the protection of human research subjects, can be found on the Department's protection of human subjects in research Web site: *http://ed.gov/about/offices/list/ocfo/humansub.html.*

(2) Offerors may also contact the following office to obtain information about the regulations for the protection of human subjects and related policies and guidelines: Protection of Human Subjects Coordinator, U.S. Department of Education, Office of the Chief Financial Officer, Financial Management Operations, 400 Maryland Avenue, SW., Washington, DC 20202–4331, Telephone: (202) 245 8090.

(End of Provision)

3452.224–72 Research activities involving human subjects.

As prescribed in 3424.170, insert the following clause in any contract that includes research activities involving human subjects covered under 34 CFR part 97:

Research Activities Involving Human Subjects (MAR 2011)

(a) In accordance with Department of Education regulations on the protection of human subjects in research, title 34, Code of Federal Regulations, part 97 ("the regulations"), the contractor, any subcontractors, and any other entities engaged in covered (nonexempt) research activities are required to establish and maintain procedures for the protection of human subjects. The definitions in 34 CFR 97.102 apply to this clause. As used in this clause, *covered research* means research involving human subjects that is not exempt under 34 CFR 97.101(b) and 97.401(b).

(b) If ED determines that proposed research activities involving human subjects are covered (*i.e.,* not exempt under the regulations), the contracting officer or contacting officer's designee will require the contractor to apply for the Federal Wide Assurance from the Office for Human Research Protections, U.S. Department of Health and Human Services, if the contractor does not already have one on file. The contracting officer will also require that the contractor obtain and send to the Department documentation of Institutional Review Board (IRB) review and approval of the research.

(c) In accordance with 34 CFR part 97, all subcontractors and any legally separate entity (neither owned nor operated by the contractor) that will be engaged in covered research activities under or related to this contract shall be required to comply with the requirements for assurances and IRB approvals. The contractor must include the substance of this clause, including paragraph (c) of this clause, in all subcontracts, and must notify any other entities engaged in the covered research activities of their responsibility to comply with the regulations.

(d) Under no condition shall the contractor conduct, or allow to be conducted, any covered research activity involving human subjects prior to the Department's receipt of the certification that the research has been reviewed and approved by the IRB. (34 CFR 97.103(f).) No covered research involving human subjects shall be initiated under this contract until the contractor has provided the contracting officer (or the contracting officer's designee) a properly completed certification form certifying IRB review and approval of the research activity, and the contracting officer or designee has received the certification. This restriction applies to the activities of each participating entity.

(e) In accordance with 34 CFR 97.109(e), an IRB must conduct continuing reviews of covered research activities at intervals appropriate to the degree of risk, but not less than once a year. Covered research activities that are expected to last one year or more are therefore subject to review by an IRB at least once a year.

(1) For each covered activity under this contract that requires continuing review, the contractor shall submit an annual written representation to the contracting officer (or the contracting officer's designee) stating whether covered research activities have been reviewed and approved by an IRB within the previous 12 months. The contractor may use the form titled "Protection of Human Subjects: Assurance Identification/Certification/Declaration of Exemption" for this representation. For multi-institutional projects, the contractor shall provide this information on its behalf and on behalf of any other entity engaged in covered research activities for which continuing IRB reviews are required.

(2) If the IRB disapproves, suspends, terminates, or requires modification of any covered research activities under this contract, the contractor shall immediately notify the contracting officer in writing of the IRB's action.

(f) The contractor shall bear full responsibility for performing as safely as is feasible all activities under this contract involving the use of human subjects and for complying with all applicable regulations and requirements concerning human subjects. No one (neither the contractor, nor any subcontractor, agent, or employee of the contractor, nor any other person or organization, institution, or group of any kind whatsoever) involved in the performance of such activities shall be deemed to constitute an agent or employee of the Department of Education or of the Federal government with respect to such activities. The contractor agrees to discharge its obligations, duties, and undertakings and the work pursuant thereto, whether requiring professional judgment or otherwise, as an independent contractor without imputing liability on the part of the Government for the acts of the contractor and its employees.

(g) Upon discovery of any noncompliance with any of the requirements or standards stated in paragraphs (b) and (c) of this clause, the contractor shall immediately correct the deficiency. If at any time during performance of this contract, the contracting officer determines, in consultation with the Protection of Human Subjects Coordinator, Office of the Chief Financial Officer, or the sponsoring office, that the contractor is not in compliance with any of the requirements or standards stated in paragraphs (b) and (c) of this clause, the contracting officer may immediately suspend, in whole or in part, work and further payments under this contract until the contractor corrects such noncompliance. Notice of the suspension may be communicated by telephone and confirmed in writing.

(h) The Government may terminate this contract, in full or in part, for failure to fully comply with any regulation or requirement related to human subjects involved in research. Such termination may be in lieu of or in addition to suspension of work or payment. Nothing herein shall be construed to limit the Government's right to terminate the contract for failure to fully comply with such requirements.

(i) The regulations, and related information on the protection of human research subjects, can be found on the Department's protection of human subjects in research Web site: *http://ed.gov/about/offices/list/ocfo/humansub.html.*

Contractors may also contact the following office to obtain information about the regulations for the protection of human subjects and related policies and guidelines: Protection of Human Subjects Coordinator, U.S. Department of Education, Office of the Chief Financial Officer, Financial Management Operations, 400 Maryland Avenue, SW., Washington, DC 20202–4331, Telephone: (202) 245–8090.

(End of Clause)

3452.227–70 Publication and publicity.

As prescribed in 3427.409, insert the following clause in all solicitations and contracts other than purchase orders:

Publication and Publicity (MAR 2011)

(a) Unless otherwise specified in this contract, the contractor is encouraged to publish and otherwise promote the results of its work under this contract. A copy of each article or work submitted by the contractor for publication shall be promptly sent to the contracting officer's representative. The contractor shall also inform the representative when the article or work is published and furnish a copy in the published form.

(b) The contractor shall acknowledge the support of the Department of Education in publicizing the work under this contract in

any medium. This acknowledgement shall read substantially as follows:

"This project has been funded at least in part with Federal funds from the U.S. Department of Education under contract number [Insert number]. The content of this publication does not necessarily reflect the views or policies of the U.S. Department of Education nor does mention of trade names, commercial products, or organizations imply endorsement by the U.S. Government."

(End of Clause)

3452.227–71 Advertising of awards.

As prescribed in 3427.409, insert the following clause in all solicitations and contracts other than purchase orders:

Advertising of Awards (MAR 2011)

The contractor agrees not to refer to awards issued by, or products or services delivered to, the Department of Education in commercial advertising in such a manner as to state or imply that the product or service provided is endorsed by the Federal government or is considered by the Federal government to be superior to other products or services.

(End of Clause)

3452.227–72 Use and Non-Disclosure Agreement.

As prescribed in 3427.409, insert the following clause in all contracts over the simplified acquisition threshold, and in contracts under the simplified acquisition threshold as appropriate:

Use and Non-Disclosure Agreement (MAR 2011)

(a) Except as provided in paragraph (b) of this clause, proprietary data, technical data, or computer software delivered to the Government with restrictions on use, modification, reproduction, release, performance, display, or disclosure may not be provided to third parties unless the intended recipient completes and signs the use and non-disclosure agreement in paragraph (c) of this clause prior to release or disclosure of the data.

(1) The specific conditions under which an intended recipient will be authorized to use, modify, reproduce, release, perform, display, or disclose proprietary data or technical data subject to limited rights, or computer software subject to restricted rights must be stipulated in an attachment to the use and non-disclosure agreement.

(2) For an intended release, disclosure, or authorized use of proprietary data, technical data, or computer software subject to special license rights, modify paragraph (c)(1)(iv) of this clause to enter the conditions, consistent with the license requirements, governing the recipient's obligations regarding use, modification, reproduction, release, performance, display, or disclosure of the data or software.

(b) The requirement for use and non-disclosure agreements does not apply to Government contractors that require access to a third party's data or software for the performance of a Government contract that contains the 3452.227–73 clause, Limitations on the use or disclosure of Government-furnished information marked with restrictive legends.

(c) The prescribed use and non-disclosure agreement is:

Use and Non-Disclosure Agreement

The undersigned, *[Insert Name],* an authorized representative of the *[Insert Company Name],* (which is hereinafter referred to as the "recipient") requests the Government to provide the recipient with proprietary data, technical data, or computer software (hereinafter referred to as "data") in which the Government's use, modification, reproduction, release, performance, display, or disclosure rights are restricted. Those data are identified in an attachment to this agreement. In consideration for receiving such data, the recipient agrees to use the data strictly in accordance with this agreement.

(1) The recipient shall—

(i) Use, modify, reproduce, release, perform, display, or disclose data marked with Small Business Innovative Research (SBIR) data rights legends only for government purposes and shall not do so for any commercial purpose. The recipient shall not release, perform, display, or disclose these data, without the express written permission of the contractor whose name appears in the restrictive legend (the contractor), to any person other than its subcontractors or suppliers, or prospective subcontractors or suppliers, who require these data to submit offers for, or perform, contracts with the recipient. The recipient shall require its subcontractors or suppliers, or prospective subcontractors or suppliers, to sign a use and non-disclosure agreement prior to disclosing or releasing these data to such persons. Such an agreement must be consistent with the terms of this agreement.

(ii) Use, modify, reproduce, release, perform, display, or disclose proprietary data or technical data marked with limited rights legends only as specified in the attachment to this agreement. Release, performance, display, or disclosure to other persons is not authorized unless specified in the attachment to this agreement or expressly permitted in writing by the contractor.

(iii) Use computer software marked with restricted rights legends only in performance of contract number *[insert contract number(s)].* The recipient shall not, for example, enhance, decompile, disassemble, or reverse engineer the software; time share; or use a computer program with more than one computer at a time. The recipient may not release, perform, display, or disclose such software to others unless expressly permitted in writing by the licensor whose name appears in the restrictive legend.

(iv) Use, modify, reproduce, release, perform, display, or disclose data marked with special license rights legends [To be completed by the contracting officer. *See* paragraph (a)(2) of this clause. Omit if none of the data requested is marked with special license rights legends].

(2) The recipient agrees to adopt or establish operating procedures and physical security measures designed to protect these data from inadvertent release or disclosure to unauthorized third parties.

(3) The recipient agrees to accept these data "as is" without any Government representation as to suitability for intended use or warranty whatsoever. This disclaimer does not affect any obligation the Government may have regarding data specified in a contract for the performance of that contract.

(4) The recipient may enter into any agreement directly with the contractor with respect to the use, modification, reproduction, release, performance, display, or disclosure of these data.

(5) The recipient agrees to indemnify and hold harmless the Government, its agents, and employees from every claim or liability, including attorneys fees, court costs, and expenses arising out of, or in any way related to, the misuse or unauthorized modification, reproduction, release, performance, display, or disclosure of data received from the Government with restrictive legends by the recipient or any person to whom the recipient has released or disclosed the data.

(6) The recipient is executing this agreement for the benefit of the contractor. The contractor is a third party beneficiary of this agreement who, in addition to any other rights it may have, is intended to have the rights of direct action against the recipient or any other person to whom the recipient has released or disclosed the data, to seek damages from any breach of this agreement, or to otherwise enforce this agreement.

(7) The recipient agrees to destroy these data, and all copies of the data in its possession, no later than 30 days after the date shown in paragraph (8) of this agreement, to have all persons to whom it released the data do so by that date, and to notify the contractor that the data have been destroyed.

(8) This agreement shall be effective for the period commencing with the recipient's execution of this agreement and ending upon *[Insert Date].* The obligations imposed by this agreement shall survive the expiration or termination of the agreement.

[Insert business name.]
Recipient's Business Name
[Have representative sign.]
Authorized Representative
[Insert date.]
Date
[Insert name and title.]
Representative's Typed Name and Title

(End of Clause)

3452.227–73 Limitations on the use or disclosure of Government-furnished information marked with restrictive legends.

As prescribed in 3427.409, insert the following clause in all contracts of third party vendors who require access to Government-furnished information including other contractors' technical data, proprietary information, or software:

Limitations on The Use Or Disclosure of Government-Furnished Information Marked With Restrictive Legends (MAR 2011)

(a) For contracts under which data are to be produced, furnished, or acquired, the terms *limited rights* and *restricted rights* are defined in the rights in data—general clause (FAR 52.227–14).

(b) Proprietary data, technical data, or computer software provided to the contractor as Government-furnished information (GFI) under this contract may be subject to restrictions on use, modification, reproduction, release, performance, display, or further disclosure.

(1) *Proprietary data with legends that serve to restrict disclosure or use of data.* The contractor shall use, modify, reproduce, perform, or display proprietary data received from the Government with proprietary or restrictive legends only in the performance of this contract. The contractor shall not, without the express written permission of the party who owns the data, release, or disclose such data or software to any person.

(2) *GFI marked with limited or restricted rights legends.* The contractor shall use, modify, reproduce, perform, or display technical data received from the Government with limited rights legends or computer software received with restricted rights legends only in the performance of this contract. The contractor shall not, without the express written permission of the party whose name appears in the legend, release or disclose such data or software to any person.

(3) *GFI marked with specially negotiated license rights legends.* The contractor shall use, modify, reproduce, release, perform, or display proprietary data, technical data, or computer software received from the Government with specially negotiated license legends only as permitted in the license. Such data or software may not be released or disclosed to other persons unless permitted by the license and, prior to release or disclosure, the intended recipient has completed the use and non-disclosure agreement. The contractor shall modify paragraph (c)(1)(iii) of the use and non-disclosure agreement (3452.227–72) to reflect the recipient's obligations regarding use, modification, reproduction, release, performance, display, and disclosure of the data or software.

(c) Indemnification and creation of third party beneficiary rights.

(1) The contractor agrees to indemnify and hold harmless the Government, its agents, and employees from every claim or liability, including attorneys fees, court costs, and expenses, arising out of, or in any way related to, the misuse or unauthorized modification, reproduction, release, performance, display, or disclosure of proprietary data, technical data, or computer software received from the Government with restrictive legends by the contractor or any person to whom the contractor has released or disclosed such data or software.

(2) The contractor agrees that the party whose name appears on the restrictive legend, in addition to any other rights it may have, is a third party beneficiary who has the right of direct action against the contractor, or any person to whom the contractor has released or disclosed such data or software, for the unauthorized duplication, release, or disclosure of proprietary data, technical data, or computer software subject to restrictive legends.

(End of Clause)

3452.228–70 Required insurance.

As prescribed in 3428.311–2, insert the following clause in all solicitations and resultant cost-reimbursement contracts:

Required Insurance (MAR 2011)

(a) The contractor shall procure and maintain such insurance as required by law or regulation, including but not limited to the requirements of FAR Subpart 28.3. Prior written approval of the contracting officer shall be required with respect to any insurance policy, the premiums for which the contractor proposes to treat as a direct cost under this contract, and with respect to any proposed qualified program of self-insurance. The terms of any other insurance policy shall be submitted to the contracting officer for approval upon request.

(b) Unless otherwise authorized in writing by the contracting officer, the contractor shall not procure or maintain for its own protection any insurance covering loss or destruction of, or damage to, Government property.

(End of Clause)

3452.232–70 Limitation of cost or funds.

The following clause shall be inserted in all contracts that include a Limitation of cost or Limitation of funds clause in accordance with 3432.705–2:

Limitation of Cost or Funds (MAR 2011)

(a) Under the circumstances in FAR 32.704(a)(1), the contractor shall submit the following information in writing to the contracting officer:

(1) Name and address of the contractor.

(2) Contract number and expiration date.

(3) Contract items and amounts that will exceed the estimated cost of the contract or the limit of the funds allotted.

(4) The elements of cost that changed from the original estimate (for example: labor, material, travel, overhead), furnished in the following order:

(i) Original estimate.

(ii) Costs incurred to date.

(iii) Estimated cost to completion.

(iv) Revised estimate.

(v) Amount of adjustment.

(5) The factors responsible for the increase.

(6) The latest date by which funds must be available to the contractor to avoid delays in performance, work stoppage, or other impairments.

(b) A fixed fee provided in a contract may not be changed if a cost overrun is funded. Changes in a fixed fee may be made only to reflect changes in the scope of work that justify an increase or decrease in the fee.

(End of Clause)

3452.232–71 Incremental funding.

As prescribed in 3432.705–2, insert the following provision in solicitations if a cost-reimbursement contract using incremental funding is contemplated:

Incremental Funding (MAR 2011)

Sufficient funds are not presently available to cover the total cost of the complete project described in this solicitation. However, it is the Government's intention to negotiate and award a contract using the incremental funding concepts described in the clause titled "Limitation of Funds" in FAR 52.232–22. Under that clause, which will be included in the resultant contract, initial funds will be obligated under the contract to cover an estimated base performance period. Additional funds are intended to be allotted to the contract by contract modification, up to and including the full estimated cost of the entire period of performance. This intent notwithstanding, the Government will not be obligated to reimburse the contractor for costs incurred in excess of the periodic allotments, nor will the contractor be obligated to perform in excess of the amount allotted.

(End of Provision)

3452.237–70 Services of consultants.

As prescribed in 3437.270, insert the following clause in all solicitations and resultant cost-reimbursement contracts that do not provide services to FSA:

Services of Consultants (MAR 2011)

Except as otherwise expressly provided elsewhere in this contract, and notwithstanding the provisions of the clause of the contract entitled "Subcontracts" (FAR 52.244–2), the prior written approval of the contracting officer shall be required—

(a) If any employee of the contractor is to be paid as a "consultant" under this contract; and

(b)(1) For the utilization of the services of any consultant under this contract exceeding the daily rate set forth elsewhere in this contract or, if no amount is set forth, $800, exclusive of travel costs, or if the services of any consultant under this contract will exceed 10 days in any calendar year.

(2) If that contracting officer's approval is required, the contractor shall obtain and furnish to the contracting officer information concerning the need for the consultant services and the reasonableness of the fee to be paid, including, but not limited to, whether fees to be paid to any consultant exceed the lowest fee charged by the consultant to others for performing consultant services of a similar nature.

(End of Clause)

3452.237–71 Observance of administrative closures.

As prescribed in 3437.170, insert the following clause in all solicitations and service contracts:

Observance of Administrative Closures (MAR 2011)

(a) The contract schedule identifies all Federal holidays that are observed under this contract. Contractor performance is required under this contract at all other times, and compensated absences are not extended due to administrative closures of Government facilities and operations due to inclement weather, Presidential decree, or other administrative issuances where Government personnel receive early dismissal instructions.

(b) In cases of contract performance at a Government facility when the facility is closed, the vendor may arrange for performance to continue during the closure at the contractor's site, if appropriate.

(End of Clause)

3452.239–70 Internet protocol version 6 (IPv6).

As prescribed in 3439.701, insert the following clause in all solicitations and resulting contracts for hardware and software:

Internet Protocol Version 6 (MAR 2011)

(a) Any system hardware, software, firmware, or networked component (voice, video, or data) developed, procured, or acquired in support or performance of this contract shall be capable of transmitting, receiving, processing, forwarding, and storing digital information across system boundaries utilizing system packets that are formatted in accordance with commercial standards of Internet protocol (IP) version 6 (IPv6) as set forth in Internet Engineering Task Force (IETF) Request for Comments (RFC) 2460 and associated IPv6-related IETF RFC standards. In addition, this system shall maintain interoperability with IPv4 systems and provide at least the same level of performance and reliability capabilities of IPv4 products.

(b) Specifically, any new IP product or system developed, acquired, or produced must—

(1) Interoperate with both IPv6 and IPv4 systems and products; and

(2) Have available contractor/vendor IPv6 technical support for development and implementation and fielded product management.

(c) Any exceptions to the use of IPv6 require the agency's CIO to give advance, written approval.

(End of Clause)

3452.239–71 Notice to offerors of Department security requirements.

As prescribed in 3439.702, include the following provision in solicitations when the offeror's employees would have access to Department-controlled facilities or space, or when the work (wherever located) would involve the design, operation, repair, or maintenance of information systems and access to sensitive but unclassified information:

Notice to Offerors of Department Security Requirements (MAR 2011)

(a) The offeror and any of its future subcontractors will have to comply with Department security policy requirements as set forth in the "Bidder's Security Package: Security Requirements for Contractors Doing Business with the Department of Education" at: *http://www.ed.gov/fund/contract/about/bsp.html.*

(b) All contractor employees must undergo personnel security screening if they will be employed for 30 days or more, in accordance with Departmental Directive OM:5–101, "Contractor Employee Personnel Security Screenings," available at: *http://www.ed.gov/fund/contract/about/acs/acsom5101.doc.*

(c) The offeror shall indicate the following employee positions it anticipates to employ in performance of this contract and their proposed risk levels based on the guidance provided in Appendix I of Departmental Directive OM:5–101:

High Risk (HR): [Specify HR positions.].

Moderate Risk (MR): [Specify MR positions.].

Low Risk (LR): [Specify LR positions.].

(d) In the event the Department disagrees with a proposed risk level assignment, the issue shall be subject to negotiation. However, if no agreement is reached, the Department's risk level assignment shall be used. The type of screening and the timing of the screening will depend upon the nature of the contractor position, the type of data to be accessed, and the type of information technology (IT) system access required. Personnel security screenings will be commensurate with the risk and magnitude of harm the individual could cause.

(End of Provision)

3452.239–72 Department security requirements.

As prescribed in 3439.702, include the following clause in contracts when the contractor's employees will have access to Department-controlled facilities or space, or when the work (wherever located) would involve the design, operation, repair, or maintenance of information systems and access to sensitive but unclassified information:

Department Security Requirements (MAR 2011)

(a) The contractor and its subcontractors shall comply with Department security policy requirements as set forth in the "Bidder's Security Package: Security Requirements for Contractors Doing Business with the Department of Education" at *http://www.ed.gov/fund/contract/about/bsp.html.*

(b) The following are the contractor employee positions required under this contract and their designated risk levels:

High Risk (HR): [Specify HR positions.]

Moderate Risk (MR): [Specify MR positions.]

Low Risk (LR): [Specify LR positions.]

(c) All contractor employees must undergo personnel security screening if they will be employed for 30 days or more, in accordance with Departmental Directive OM:5–101, "Contractor Employee Personnel Security Screenings." The type of screening and the timing of the screening will depend upon the nature of the contractor position, the type of data to be accessed, and the type of information technology (IT) system access required. Personnel security screenings will be commensurate with the risk and magnitude of harm the individual could cause.

(d) The contractor shall—

(1) Ensure that all non-U.S. citizen contractor employees are lawful permanent residents of the United States or have appropriate work authorization documents as required by the Department of Homeland Security, Bureau of Immigration and Appeals, to work in the United States.

(2) Ensure that no employees are assigned to high risk designated positions prior to a completed preliminary screening.

(3) Submit all required personnel security forms to the contracting officer's representative (COR) within 24 hours of an assignment to a Department contract and ensure that the forms are complete.

(4) Ensure that no contractor employee is placed in a higher risk position than that for which he or she was previously approved, without the approval of the contracting officer or the COR, the Department personnel security officer, and the Department computer security officer.

(5) Ensure that all contractor employees occupying high-risk designated positions submit forms for reinvestigation every five years for the duration of the contract or if there is a break in service to a Department contract of 365 days or more.

(6) Report to the COR all instances of individuals seeking to obtain unauthorized access to any departmental IT system, or sensitive but unclassified and/or Privacy Act protected information.

(7) Report to the COR any information that raises an issue as to whether a contractor employee's eligibility for continued employment or access to Department IT systems, or sensitive but unclassified and/or Privacy Act protected information, promotes the efficiency of the service or violates the public trust.

(8) Withdraw from consideration under the contract any employee receiving an unfavorable adjudication determination.

(9) Officially notify each contractor employee if he or she will no longer work on a Department contract.

(10) Abide by the requirements in Departmental Directive OM:5–101, "Contractor Employee Personnel Security Screenings."

(e) Further information including definitions of terms used in this clause and a list of required investigative forms for each risk designation are contained in Departmental Directive OM:5–101, "Contractor Employee Personnel Security Screenings" available at the Web site listed in the first paragraph of this clause.

(f) Failure to comply with the contractor personnel security requirements may result in a termination of the contract for default.

(End of Clause)

3452.239–73 Federal desktop core configuration (FDCC) compatibility.

As prescribed in 3439.703, insert the following clause in all solicitations and contracts where software will be developed, maintained, or operated on any system using the FDCC configuration:

Federal Desktop Core Configuration (FDCC) Compatibility (MAR 2011)

(a) (1) The provider of information technology shall certify applications are fully functional and operate correctly as intended on systems using the Federal desktop core configuration (FDCC). This includes Internet Explorer 7 configured to operate on Windows XP and Windows Vista (in Protected Mode on Vista).

(2) For the Windows XP settings, *see: http://csrc.nist.gov/itsec/guidance_WinXP.html,* and for the Windows Vista settings, *see: http://csrc.nist.gov/itsec/guidance_vista.html.*

(b) The standard installation, operation, maintenance, update, or patching of software shall not alter the configuration settings from the approved FDCC configuration. The information technology should also use the Windows Installer Service for installation to the default "program files" directory and should be able to silently install and uninstall.

(c) Applications designed for normal end users shall run in the standard user context without elevated system administration privileges.

(End of Clause)

3452.242–70 Litigation and claims.

As prescribed in 3442.7001, insert the following clause in all solicitations and resultant cost-reimbursement contracts:

Litigation and Claims (MAR 2011)

(a) The contractor shall give the contracting officer immediate notice in writing of—

(1) Any legal action, filed against the contractor arising out of the performance of this contract, including any proceeding before any administrative agency or court of law, and also including, but not limited to, the performance of any subcontract hereunder; and

(2) Any claim against the contractor for cost that is allowable under the "allowable cost and payment" clause.

(b) Except as otherwise directed by the contracting officer, the contractor shall immediately furnish the contracting officer copies of all pertinent papers received under that action or claim.

(c) If required by the contracting officer, the contractor shall—

(1) Effect an assignment and subrogation in favor of the Government of all the contractor's rights and claims (except those against the Government) arising out of the action or claim against the contractor; and

(2) Authorize the Government to settle or defend the action or claim and to represent the contractor in, or to take charge of, the action.

(d) If the settlement or defense of an action or claim is undertaken by the Government, the contractor shall furnish all reasonable required assistance. However, if an action against the contractor is not covered by a policy of insurance, the contractor shall notify the contracting officer and proceed with the defense of the action in good faith.

(e) To the extent not in conflict with any applicable policy of insurance, the contractor may, with the contracting officer's approval, settle any such action or claim.

(f)(1) The Government shall not be liable for the expense of defending any action or for any costs resulting from the loss thereof to the extent that the contractor would have been compensated by insurance that was required by law, regulation, contract clause, or other written direction of the contracting officer, but that the contractor failed to secure through its own fault or negligence.

(2) In any event, unless otherwise expressly provided in this contract, the contractor shall not be reimbursed or indemnified by the Government for any cost or expense of liability that the contractor may incur or be subject to by reason of any loss, injury, or damage, to the person or to real or personal property of any third parties as may arise from the performance of this contract.

(End of Clause)

3452.242–71 Notice to the Government of delays.

As prescribed in 3442.7002, insert the following clause in all solicitations and contracts other than purchase orders:

Notice to The Government Of Delays (MAR 2011)

The contractor shall notify the contracting officer of any actual or potential situation, including but not limited to labor disputes, that delays or threatens to delay the timely performance of work under this contract. The contractor shall immediately give written notice thereof, including all relevant information.

(End of Clause)

3452.242–73 Accessibility of meetings, conferences, and seminars to persons with disabilities.

As prescribed in 3442.7101(b), insert the following clause in all solicitations and contracts:

Accessibility of Meetings, Conferences, and Seminars to Persons With Disabilities (MAR 2011)

The contractor shall assure that any meeting, conference, or seminar held pursuant to the contract will meet all applicable standards for accessibility to persons with disabilities pursuant to section 504 of the Rehabilitation Act of 1973, as amended (29 U.S.C. 794) and any implementing regulations of the Department.

(End of Clause)

3452.243–70 Key personnel.

As prescribed in 3443.107, insert a clause substantially the same as the following in all solicitations and resultant cost-reimbursement contracts in which it will be essential for the contracting officer to be notified that a change of designated key personnel is to take place by the contractor:

Key Personnel (MAR 2011)

(a) The personnel designated as key personnel in this contract are considered to be essential to the work being performed hereunder. Prior to diverting any of the specified individuals to other programs, or otherwise substituting any other personnel for specified personnel, the contractor shall notify the contracting officer reasonably in advance and shall submit justification (including proposed substitutions) in sufficient detail to permit evaluation of the impact on the contract effort. No diversion or substitution shall be made by the contractor without written consent of the contracting officer; provided, that the contracting officer may ratify a diversion or substitution in writing and that ratification shall constitute the consent of the contracting officer required by this clause. The contract shall be modified to reflect the addition or deletion of key personnel.

(b) The following personnel have been identified as Key Personnel in the performance of this contract:

Labor category	Name
[Insert category.]	[Insert name.]

(End of Clause)

3452.247–70 Foreign travel.

As prescribed in 3447.701, insert the following clause in all solicitations and resultant cost-reimbursement contracts:

Foreign Travel (MAR 2011)

Foreign travel shall not be undertaken without the prior written approval of the contracting officer. As used in this clause, *foreign travel* means travel outside the Continental United States, as defined in the Federal Travel Regulation. Travel to non-foreign areas (including the States of Alaska and Hawaii, the Commonwealths of Puerto Rico, Guam and the Northern Mariana Islands and the territories and possessions of the United States) is considered "foreign travel" for the purposes of this clause.

(End of Clause)

[FR Doc. 2011–4660 Filed 3–7–11; 8:45 am]

BILLING CODE 4000–01–P

Reader Aids

Federal Register

Vol. 76, No. 45

Tuesday, March 8, 2011

CUSTOMER SERVICE AND INFORMATION

Federal Register/Code of Federal Regulations	
General Information, indexes and other finding aids	**202–741–6000**
Laws	**741–6000**
Presidential Documents	
Executive orders and proclamations	**741–6000**
The United States Government Manual	**741–6000**
Other Services	
Electronic and on-line services (voice)	**741–6020**
Privacy Act Compilation	**741–6064**
Public Laws Update Service (numbers, dates, etc.)	**741–6043**
TTY for the deaf-and-hard-of-hearing	**741–6086**

ELECTRONIC RESEARCH

World Wide Web

Full text of the daily Federal Register, CFR and other publications is located at: **www.fdsys.gov.**

Federal Register information and research tools, including Public Inspection List, indexes, and links to GPO Access are located at: **www.ofr.gov.**

E-mail

FEDREGTOC-L (Federal Register Table of Contents LISTSERV) is an open e-mail service that provides subscribers with a digital form of the Federal Register Table of Contents. The digital form of the Federal Register Table of Contents includes HTML and PDF links to the full text of each document.

To join or leave, go to **http://listserv.access.gpo.gov** and select *Online mailing list archives, FEDREGTOC-L, Join or leave the list (or change settings);* then follow the instructions.

PENS (Public Law Electronic Notification Service) is an e-mail service that notifies subscribers of recently enacted laws.

To subscribe, go to **http://listserv.gsa.gov/archives/publaws-l.html** and select *Join or leave the list (or change settings);* then follow the instructions.

FEDREGTOC-L and **PENS** are mailing lists only. We cannot respond to specific inquiries.

Reference questions. Send questions and comments about the Federal Register system to: **fedreg.info@nara.gov**

The Federal Register staff cannot interpret specific documents or regulations.

Reminders. Effective January 1, 2009, the Reminders, including Rules Going Into Effect and Comments Due Next Week, no longer appear in the Reader Aids section of the Federal Register. This information can be found online at **http://www.regulations.gov.**

CFR Checklist. Effective January 1, 2009, the CFR Checklist no longer appears in the Federal Register. This information can be found online at **http://bookstore.gpo.gov/.**

FEDERAL REGISTER PAGES AND DATE, MARCH

11075–11314 1
11315–11666 2
11667–11936 3
11937–12268 4
12269–12548 7
12549–12816 8

CFR PARTS AFFECTED DURING MARCH

At the end of each month the Office of the Federal Register publishes separately a List of CFR Sections Affected (LSA), which lists parts and sections affected by documents published since the revison date of each title.

2 CFR

Proposed Rules:
Ch. XXIV 11395
Ch. XXVII 11163

3 CFR

Proclamations:
8628 11927
8629 11929
8630 11931
8631 11933
8632 11935
8633 12265

Executive Orders:
13566 11315

Administrative Orders:
Notice of March 2, 2011 12267

4 CFR

81 12549

5 CFR

Proposed Rules:
831 11684
842 11684
Ch. XXVIII 11163
Ch. LXV 11395

6 CFR

37 12269

Proposed Rules:
5 12609

7 CFR

1 11667
932 11937
1218 11939

Proposed Rules:
985 11971

8 CFR

Proposed Rules:
214 11686
299 11686
Ch. V 11163

10 CFR

429 12422
430 12422
431 12422
712 12271

Proposed Rules:
50 12295
431 11396

12 CFR

226 11319
932 11668
1225 11668

Proposed Rules:
226 11598
567 12611
703 11164
704 11164
709 11164
742 11164
Ch. XVII 11395

13 CFR

124 12273

Proposed Rules:
Ch. III 12616

14 CFR

21 12250
25 12250
27 12274
39 ..... 11324, 11940, 12277, 12556
71 12278
73 12558
95 11675
97 ..... 11942, 11944
121 ..... 12550, 12559
129 12550

Proposed Rules:
Ch. I 11699
33 11172
39 ..... 11174, 12617, 12619, 12624, 12627, 12629, 12634
71 ..... 11978, 12298, 12643, 12645
73 11399
121 11176
139 12300
Ch. II 11699
Ch. III 11699

15 CFR

750 12279

17 CFR

240 11327

Proposed Rules:
4 11701
242 12645

18 CFR

Proposed Rules:
35 11177

20 CFR

Proposed Rules:
404 11402
408 11402
416 11402
422 11402

21 CFR

1 12563
14 12563
17 12563
113 11892

173 11328
510 11330
516 11331
520 ....11330, 12563
558 11330
1308 11075
Proposed Rules:
Ch. II 11163

23 CFR

Proposed Rules:
Ch. I 11699
Ch. II 11699
Ch. III 11699

24 CFR

Ch. XV 11946
Proposed Rules:
Ch. I 11395
Ch. II 11395
Ch. III 11395
Ch. IV 11395
Ch. V 11395
Ch. VI 11395
Ch. VIII 11395
Ch. IX 11395
Ch. X 11395
Ch. XII 11395

26 CFR

1 11956

27 CFR

Proposed Rules:
Ch. II 11163

28 CFR

541 11078
Proposed Rules:
Ch. I 11163
26 11705
Ch. III 11163
Ch. V 11163
Ch. VI 11163

30 CFR

250 11079
Proposed Rules:
70 12648
71 12648
72 12648
75 ....11187, 12648
90 12648

31 CFR

356 11079
Proposed Rules:
Ch. IX 11163

33 CFR

117 ....11332, 11679, 11959, 11960
165 ....11334, 11337, 11961

36 CFR

242 12564
1281 11337

38 CFR

17 11338
51 11339
Proposed Rules:
59 11187

40 CFR

52 ....11080, 11082, 11083, 11963, 12280, 12587
81 12587
180 ....11340, 11344, 11965
271 12283
272 12283
300 11350
Proposed Rules:
Ch. I 11980
52 ....11190, 11983, 12302, 12305, 12306, 12651
141 11713
142 11713
271 12307
272 12307
281 11404
Ch. IV 11163

41 CFR

Proposed Rules:
Ch. 128 11163

42 CFR

Proposed Rules:
5 12307

44 CFR

64 12596
Proposed Rules:
67 ....12308, 12665

45 CFR

Proposed Rules:
Ch. V 11163

46 CFR

520 11351
530 11680
531 11680
532 11351
Proposed Rules:
Ch. II 11699

47 CFR

11 12600
73 ....11680, 12292
74 11680
90 11681
Proposed Rules:
1 12308
20 12308
36 11632
43 12308
51 11407
53 11407
54 11632
61 11632
63 11407
64 ....11407, 11632
69 11632
73 11737

48 CFR

Ch. 2 11969
Ch. 34 12796
207 11361
209 11363
212 11371
227 11363
232 11371
252 ....11363, 11371
Proposed Rules:
211 ....11190, 11985, 12666
212 ....11190, 11985, 12666
216 11410
217 11411
231 11414
252 ....11190, 11985, 12666
908 11985
945 11985
970 11985
Ch. 12 11699
Ch. 24 11395
Ch. 28 11163

49 CFR

109 11570
Proposed Rules:
Ch. I 11699
171 11191
173 11191
178 11191
180 11191
Ch. II 11699
234 11992
Ch. III 11699
Ch. V 11699
571 ....11415, 11417, 11418
585 11418
Ch. VI 11699
Ch. VII 11699
Ch. VIII 11699
Ch. X 11699
Ch. XI 11699

50 CFR

17 11086
100 12564
223 12292
622 ....12604, 12605
648 11373
660 ....11381, 11969
679 ....11111, 11139, 11161, 11393, 11394, 12293, 12606, 12607
Proposed Rules:
17 ....12667, 12683
223 12308
224 12308
648 ....11737, 11858

LIST OF PUBLIC LAWS

This is a continuing list of public bills from the current session of Congress which have become Federal laws. It may be used in conjunction with "P L U S" (Public Laws Update Service) on 202–741–6043. This list is also available online at *http://www.archives.gov/federal-register/laws.html*.

The text of laws is not published in the **Federal Register** but may be ordered in "slip law" (individual pamphlet) form from the Superintendent of Documents, U.S. Government Printing Office, Washington, DC 20402 (phone, 202–512–1808). The text will also be made available on the Internet from GPO Access at *http://www.gpoaccess.gov/plaws/index.html*. Some laws may not yet be available.

H.R. 662/P.L. 112–5

Surface Transportation Extension Act of 2011 (Mar. 4, 2011; 125 Stat. 14)

Last List March 4, 2011

Public Laws Electronic Notification Service (PENS)

PENS is a free electronic mail notification service of newly enacted public laws. To subscribe, go to *http://listserv.gsa.gov/archives/publaws-l.html*

Note: This service is strictly for E-mail notification of new laws. The text of laws is not available through this service. **PENS** cannot respond to specific inquiries sent to this address.