AUTHENTICATED
U.S. GOVERNMENT
INFORMATION
GPO

FEDERAL REGISTER

Vol. 76 Friday,
No. 122 June 24, 2011

Pages 36961–37240

OFFICE OF THE FEDERAL REGISTER

The **FEDERAL REGISTER** (ISSN 0097–6326) is published daily, Monday through Friday, except official holidays, by the Office of the Federal Register, National Archives and Records Administration, Washington, DC 20408, under the Federal Register Act (44 U.S.C. Ch. 15) and the regulations of the Administrative Committee of the Federal Register (1 CFR Ch. I). The Superintendent of Documents, U.S. Government Printing Office, Washington, DC 20402 is the exclusive distributor of the official edition. Periodicals postage is paid at Washington, DC.

The **FEDERAL REGISTER** provides a uniform system for making available to the public regulations and legal notices issued by Federal agencies. These include Presidential proclamations and Executive Orders, Federal agency documents having general applicability and legal effect, documents required to be published by act of Congress, and other Federal agency documents of public interest.

Documents are on file for public inspection in the Office of the Federal Register the day before they are published, unless the issuing agency requests earlier filing. For a list of documents currently on file for public inspection, see *www.ofr.gov.*

The seal of the National Archives and Records Administration authenticates the Federal Register as the official serial publication established under the Federal Register Act. Under 44 U.S.C. 1507, the contents of the **Federal Register** shall be judicially noticed.

The **Federal Register** is published in paper and on 24x microfiche. It is also available online at no charge at *www.fdsys.gov*, a service of the U.S. Government Printing Office.

The online edition of the **Federal Register** is issued under the authority of the Administrative Committee of the Federal Register as the official legal equivalent of the paper and microfiche editions (44 U.S.C. 4101 and 1 CFR 5.10). It is updated by 6:00 a.m. each day the **Federal Register** is published and includes both text and graphics from Volume 59, 1 (January 2, 1994) forward. For more information, contact the GPO Customer Contact Center, U.S. Government Printing Office. Phone 202-512-1800 or 866-512-1800 (toll free). E-mail, *gpo@custhelp.com.*

The annual subscription price for the **Federal Register** paper edition is $749 plus postage, or $808, plus postage, for a combined **Federal Register, Federal Register** Index and List of CFR Sections Affected (LSA) subscription; the microfiche edition of the **Federal Register** including the **Federal Register** Index and LSA is $165, plus postage. Six month subscriptions are available for one-half the annual rate. The prevailing postal rates will be applied to orders according to the delivery method requested. The price of a single copy of the daily **Federal Register,** including postage, is based on the number of pages: $11 for an issue containing less than 200 pages; $22 for an issue containing 200 to 400 pages; and $33 for an issue containing more than 400 pages. Single issues of the microfiche edition may be purchased for $3 per copy, including postage. Remit check or money order, made payable to the Superintendent of Documents, or charge to your GPO Deposit Account, VISA, MasterCard, American Express, or Discover. Mail to: U.S. Government Printing Office—New Orders, P.O. Box 979050, St. Louis, MO 63197-9000; or call toll free 1-866-512-1800, DC area 202-512-1800; or go to the U.S. Government Online Bookstore site, see *bookstore.gpo.gov.*

There are no restrictions on the republication of material appearing in the **Federal Register.**

How To Cite This Publication: Use the volume number and the page number. Example: 76 FR 12345.

Postmaster: Send address changes to the Superintendent of Documents, Federal Register, U.S. Government Printing Office, Washington, DC 20402, along with the entire mailing label from the last issue received.

SUBSCRIPTIONS AND COPIES

PUBLIC

Subscriptions:

Paper or fiche	**202–512–1800**
Assistance with public subscriptions	**202–512–1806**

General online information **202–512–1530; 1–888–293–6498**

Single copies/back copies:

Paper or fiche	**202–512–1800**
Assistance with public single copies	**1–866–512–1800 (Toll-Free)**

FEDERAL AGENCIES

Subscriptions:

Paper or fiche	**202–741–6005**
Assistance with Federal agency subscriptions	**202–741–6005**

FEDERAL REGISTER WORKSHOP

THE FEDERAL REGISTER: WHAT IT IS AND HOW TO USE IT

FOR: Any person who uses the Federal Register and Code of Federal Regulations.

WHO: Sponsored by the Office of the Federal Register.

WHAT: Free public briefings (approximately 3 hours) to present:

1. The regulatory process, with a focus on the Federal Register system and the public's role in the development of regulations.
2. The relationship between the Federal Register and Code of Federal Regulations.
3. The important elements of typical Federal Register documents.
4. An introduction to the finding aids of the FR/CFR system.

WHY: To provide the public with access to information necessary to research Federal agency regulations which directly affect them. There will be no discussion of specific agency regulations.

WHEN: Tuesday, July 12, 2011
9 a.m.–12:30 p.m.

WHERE: Office of the Federal Register
Conference Room, Suite 700
800 North Capitol Street, NW.
Washington, DC 20002

RESERVATIONS: (202) 741–6008

Printed on recycled paper.

Contents

Federal Register

Vol. 76, No. 122

Friday, June 24, 2011

Agency for Healthcare Research and Quality
NOTICES
Agency Information Collection Activities; Proposals, Submissions, and Approvals, 37115–37118

Agriculture Department
See Animal and Plant Health Inspection Service
See Food and Nutrition Service
See Forest Service
See Rural Utilities Service

Animal and Plant Health Inspection Service
NOTICES
Agency Information Collection Activities; Proposals, Submissions, and Approvals:
Importation of Used Farm Equipment From Regions Affected with Foot-and-Mouth Disease, 37058
Importation of Baby Squash and Baby Courgettes from Zambia, 37055–37056
Importation of Eggplant From Israel, 37054–37055
Importation of Longan From Taiwan, 37054
Importation of Tomatoes from Souss-Massa-Draa, Morocco, 37053
Pale Cyst Nematode, 37056–37057
Virus-Serum-Toxin Act and Regulations, 37057–37058

Architectural and Transportation Barriers Compliance Board
NOTICES
Meetings:
Architectural and Transportation Barriers Compliance Board, 37062

Army Department
See Engineers Corps

Blind or Severely Disabled, Committee for Purchase From People Who Are
See Committee for Purchase From People Who Are Blind or Severely Disabled

Centers for Disease Control and Prevention
NOTICES
Meetings:
Development of Best Practices for Community Health Needs Assessment and Implementation Strategy, 37119
Interagency Committee on Smoking and Health, 37119–37120
Manual Materials Handling Workshop, 37118–37119

Centers for Medicare & Medicaid Services
NOTICES
Meetings:
Advisory Panel on Outreach and Education, 37120–37121
Medicare Program; Second Semi-Annual Meeting of the Advisory Panel on Ambulatory Payment Classification Groups—August 10, 2011 Through August 12, 2011, 37121–37123

Coast Guard
RULES
Drawbridge Operation Regulations:
Delaware River, between Burlington, NJ and Bristol, PA, 37002
New Jersey Intracoastal Waterway, Atlantic City, NJ, 37001–37002
Safety Zones:
Central Astoria Independence Celebration Fireworks Event, Wards Island, NY, 37002–37005
Fan Pier Yacht Club Fireworks, Boston Harbor, Boston, MA, 37005–37007
Independence Day Fireworks Celebration, Richmond, CA, 37012–37014
Jameson Beach Fourth of July Fireworks Display, 37009–37012
Stockton Ports Baseball Club Fourth of July Fireworks Display, Stockton, CA, 37007–37009
Special Local Regulations:
Seattle Seafair Unlimited Hydroplane Race, 37000–37001
PROPOSED RULES
Drawbridge Operation Regulations:
Apponagansett River, Dartmouth, MA, 37041–37044
Passaic River, Harrison, NJ, 37039–37041

Commerce Department
See Industry and Security Bureau
See National Oceanic and Atmospheric Administration
NOTICES
Agency Information Collection Activities; Proposals, Submissions, and Approvals, 37062–37063

Committee for Purchase From People Who Are Blind or Severely Disabled
NOTICES
Procurement List; Additions and Deletions, 37069–37070

Comptroller of the Currency
PROPOSED RULES
Margin and Capital Requirements for Covered Swap Entities, 37029–37030
Office of Thrift Supervision Integration; Dodd-Frank Act Implementation; Correction, 37029

Consumer Product Safety Commission
NOTICES
Meetings; Sunshine Act, 37070

Corporation for National and Community Service
NOTICES
Meetings; Sunshine Act, 37070–37071

Defense Department
See Engineers Corps
NOTICES
36(b)(1) Arms Sales Notifications, 37071–37082
Privacy Act; Systems of Records, 37082–37084

Education Department
NOTICES
Agency Information Collection Activities; Proposals, Submissions, and Approvals, 37084–37085

Applications for New Awards:
Rehabilitation Engineering Research Centers, 37085–37089
Final Priorities, Disability and Rehabilitation Research Projects and Centers Program, 37090–37094
List of Correspondence, 37094–37095
Privacy Act; System of Records, 37095–37100

Employee Benefits Security Administration
RULES
Group Health Plans and Health Insurance Issuers:
Internal Claims and Appeals and External Review Processes, 37208–37234

Employment and Training Administration
NOTICES
Amended Certifications Regarding Eligibility To Apply for Worker Adjustment Assistance:
Travelers Indemnity Co. et al., Knoxville, TN, 37153
Eligibility To Apply for Worker Adjustment Assistance; Amended Certifications:
Indianapolis Metal Center et al., Indianapolis, IN, 37153–37154
Eligibility To Apply for Worker Adjustment Assistance; Certifications:
Covidien et al., Norwood, MA, 37154
Eligibility To Apply for Worker Adjustment Assistance; Determinations, 37154–37157
Eligibility To Apply for Worker Adjustment Assistance; Investigations Regarding Certifications, 37157–37158

Energy Department
See Federal Energy Regulatory Commission
NOTICES
Environmental Impact Statements; Availability, etc.:
Continued Operation of Sandia National Laboratories, NM, 37100–37103
Meetings:
Electricity Advisory Committee, 37103–37104

Engineers Corps
NOTICES
Meetings:
Board on Coastal Engineering Research, 37084

Environmental Protection Agency
RULES
Approvals of Alternative Test Procedures for Analysis of Contaminants Under Safe Drinking Water Act:
Analysis and Sampling Procedures, 37014–37021
Final Authorizations of State Hazardous Waste Management Program Revisions:
Louisiana, 37021–37025
PROPOSED RULES
California State Implementation Plan; Revisions:
San Joaquin Valley Unified Air Pollution Control District, 37044–37045
Final Authorization of State Hazardous Waste Management Program Revisions:
Louisiana, 37048–37049
Synchronization of Expiration Dates:
Pesticide Applicator Certificates With Underlying State or Tribal Applicator Certificates, 37045–37048
NOTICES
Access to Confidential Business Information by Computer Sciences Corp. and Its Identified Subcontractors, 37111
Environmental Impact Statements; Weekly Receipt, 37111–37112
Meetings:
National Advisory Council for Environmental Policy and Technology, 37112–37113

Executive Office of the President
See Presidential Documents

Farm Credit Administration
PROPOSED RULES
Margin and Capital Requirements for Covered Swap Entities, 37029–37030

Federal Aviation Administration
RULES
Airworthiness Directives:
PIAGGIO AERO INDUSTRIES S.p.A Model PIAGGIO P–180 Airplanes, 36980–36981
Rolls-Royce plc RB211–Trent 500 Series Turbofan Engines, 36981–36983
Marking Meteorological Evaluation Towers, 36983–36986
PROPOSED RULES
Modification of Class B Airspace:
Las Vegas, NV; Correction, 37034

Federal Communications Commission
PROPOSED RULES
Improving Wireless Coverage Through the Use of Signal Boosters, 37049
Radio Broadcasting Services:
Bastrop, LA, 37049–37050
NOTICES
Agency Information Collection Activities; Proposals, Submissions, and Approvals, 37113–37114

Federal Deposit Insurance Corporation
PROPOSED RULES
Margin and Capital Requirements for Covered Swap Entities, 37029–37030

Federal Emergency Management Agency
NOTICES
Major Disaster Declarations:
Missouri; Amendment No. 7, 37135

Federal Energy Regulatory Commission
NOTICES
Applications for Abandonment:
ANR Pipeline Co., 37104–37105
Applications:
Pacific Gas and Electric Co., 37105–37106
Combined Filings, 37106–37108
Declarations of Intentions and Soliciting Comments, Protests, and/or Motions To Intervene:
Inside Passage Electric Coop., 37108–37109
Environmental Assessments; Availability, etc.:
Proposed Mid-South Expansion Project, Transcontinental Gas Pipe Line Co., LLC, 37109–37110
Initial Market-Based Rate Filings Including Requests for Blanket Section 204 Authorizations:
ORNI 39 LLC, 37110–37111

Federal Housing Finance Agency
PROPOSED RULES
Margin and Capital Requirements for Covered Swap Entities, 37029–37030

Federal Motor Carrier Safety Administration
NOTICES
Agency Information Collection Activities; Proposals, Submissions, and Approvals:
Evaluating the Safety Benefits of an On-Board Monitoring System in Commercial Vehicle Operations, 37167–37168
Qualifications of Drivers; Exemption Applications:
Diabetes Mellitus, 37171–37173
Vision, 37168–37171
Vision; Renewals, 37173–37174

Federal Reserve System
PROPOSED RULES
Margin and Capital Requirements for Covered Swap Entities, 37029–37030
NOTICES
Federal Open Market Committee; Domestic Policy Directives, 37114
Formations of, Acquisitions by, and Mergers of Bank Holding Companies, 37114

Federal Transit Administration
NOTICES
Capital Investment Program:
New Starts and Small Starts Program Funds, 37174–37175
Environmental Sustainability Program Funds Availability:
Transit Investments for Greenhouse Gas and Energy Reduction Program, et al., 37175–37184
State of Good Repair Bus and Bus Facilities Initiative Funds Availability:
Discretionary Bus and Bus Facilities Program, 37184–37189

Financial Crimes Enforcement Network
RULES
Bank Secrecy Act Regulations:
Reports of Foreign Financial Accounts; Correction, 37000

Fiscal Service
NOTICES
Surety Companies Acceptable on Federal Bonds:
Clearwater Insurance Co.; Termination, 37194
St. Paul Fire and Marine Insurance Co. et al.; Change in State of Incorporation, Business Address and Phone, 37194

Fish and Wildlife Service
NOTICES
Draft Recovery Plan, Mexican Spotted Owl; First Revision, 37141–37142
Endangered and Threatened Wildlife and Plants:
Incidental Take Permit Application, etc., Charlotte County, FL, 37142–37143
Environmental Assessments; Availability, etc.:
Buck Island, Green Cay, and Sandy Point National Wildlife Refuges, U.S. VI, 37143–37145

Food and Drug Administration
RULES
Medical Devices:
Exception From General Requirements for Informed Consent, 36989–36993
Neurological Devices; Clarification of Classification for Human Dura Mater; Technical Amendment, 36993
NOTICES
Agency Information Collection Activities; Proposals, Submissions, and Approvals:
Draft Guidance for Industry on Postmarketing Adverse Event Reporting for Medical Products, etc., 37124–37126
Guidance for Industry on Pharmacogenomic Data Submissions, 37123–37124
Debarment Orders:
Timothy J. Rosio, 37126–37127
Determination of Regulatory Review Period for Purposes of Patent Extensions:
INVEGA SUSTENNA, 37128–37129
XYZAL, 37127–37128
Drug Products Not Withdrawn From Sale for Reasons of Safety or Effectiveness; Determinations:
SODIUM FLUORIDE F 18 (Sodium Fluoride F–18) Injection, 37129
International Conference on Harmonisation:
Guidance on Q4B Evaluation and Recommendation of Pharmacopoeial Texts, etc., 37129–37131
Meetings:
Gastrointestinal Drugs and Drug Safety and Risk Management Advisory Committees, 37131
Statements of Organizations, Functions, and Delegations of Authority, 37131–37132

Food and Nutrition Service
NOTICES
Agency Information Collection Activities; Proposals, Submissions, and Approvals:
Federal-State Supplemental Nutrition Program(s) Agreement, 37059

Forest Service
NOTICES
Environmental Impact Statements; Availability, etc.:
Siuslaw National Forest; Oregon; Oregon Dunes NRA Management Area 10 (C) Route, 37059–37061
Meetings:
Lolo and Kootenai National Forests' Sanders County Resource Advisory Committee, 37061–37062

Health and Human Services Department
See Agency for Healthcare Research and Quality
See Centers for Disease Control and Prevention
See Centers for Medicare & Medicaid Services
See Food and Drug Administration
See National Institutes of Health
See Substance Abuse and Mental Health Services Administration
RULES
Group Health Plans and Health Insurance Issuers:
Internal Claims and Appeals and External Review Processes, 37208–37234
NOTICES
Petitions To Add Class of Employees to Special Exposure Cohort; Determinations, 37114–37115

Homeland Security Department
See Coast Guard
See Federal Emergency Management Agency
See U.S. Customs and Border Protection

Housing and Urban Development Department
NOTICES
Agency Information Collection Activities; Proposals, Submissions, and Approvals:
Sustainable Communities Regional Grant Program, 37139–37140
Buy American Exceptions Under American Recovery and Reinvestment Act of 2009, 37140
Federal Property Suitable as Facilities To Assist Homeless, 37140–37141

Industry and Security Bureau
RULES
Export Controls for High Performance Computers:
Wassenaar Arrangement Agreement Implementation and Revisions to License Exceptions, 36986–36989

Interior Department
See Fish and Wildlife Service
See Land Management Bureau
See National Park Service
NOTICES
Meetings:
Exxon Valdez Oil Spill Trustee Council, 37141

Internal Revenue Service
RULES
Extension of Time for Filing Returns, 36996–37000
Group Health Plans and Health Insurance Issuers:
Internal Claims and Appeals and External Review Processes, 37208–37234
Guidance under Section 956 for Determining Basis of Property Acquired in Certain Nonrecognition Transactions, 36993–36995
Requirements for Taxpayers Filing Form 5472; Correction, 36995–36996
PROPOSED RULES
Deduction Limitation for Certain Employee Remuneration in Excess of $1,000,000, 37034–37037
Requirements for Group Health Plans and Health Insurance Issuers:
Internal Claims and Appeals and External Review Processes, 37037–37039
NOTICES
Agency Information Collection Activities; Proposals, Submissions, and Approvals, 37194–37196
Meetings:
Area 1 Taxpayer Advocacy Panel, 37198
Area 5 Taxpayer Advocacy Panel, 37199
Area 2 Taxpayer Advocacy Panel, 37198
Area 3 Taxpayer Advocacy Panel, 37198
Area 4 Taxpayer Advocacy Panel, 37198–37199
Area 6 Taxpayer Advocacy Panel, 37197
Area 7 Taxpayer Advocacy Panel, 37199
Taxpayer Advocacy Panel Earned Income Tax Credit Project Committee, 37199
Taxpayer Advocacy Panel Joint Committee, 37197
Taxpayer Advocacy Panel Notice Improvement Project Committee, 37196
Taxpayer Advocacy Panel Small Business/Self Employed Correspondence Exam Toll Free Project Committee, 37196–37197
Taxpayer Advocacy Panel Small Business-Self Employed Correspondence Exam Practitioner Engagement Project Committee, 37200
Taxpayer Advocacy Panel Tax Forms and Publications Project Committee, 37200
Taxpayer Advocacy Panel Taxpayer Assistance Center Project Committee, 37199–37200
Taxpayer Advocacy Panel Volunteer Income Tax Assistance Project Committee, 37197

Justice Department
NOTICES
Agency Information Collection Activities; Proposals, Submissions, and Approvals:
Semi-Annual Progress Report for Grants to Indian Tribal Governments Program, 37151–37152
Lodgings of Consent Decrees, 37152
Lodgings of Proposed Consent Decrees, 37153

Labor Department
See Employee Benefits Security Administration
See Employment and Training Administration

Land Management Bureau
NOTICES
Environmental Assessments; Availability, etc.:
Four Federal Coal Lease Applications in Haskell and LeFlore Counties, OK, 37145–37147
Meetings:
Eugene District Resource Advisory Committee, 37147
Temporary Closures and Temporary Restrictions on Specific Uses of Public Lands:
Pershing County, NV, 37147–37150

National Credit Union Administration
RULES
Golden Parachute and Indemnification Payments:
Technical Correction, 36979–36980
Sample Income Data to Meet Low-Income Definition, 36976–36979
PROPOSED RULES
Financial Deriviatives Transactions To Offset Interest Rate Risk:
Investment and Deposit Activities, 37030–37034

National Highway Traffic Safety Administration
RULES
Make Inoperative Exemptions, Vehicle Modifications To Accommodate People With Disabilities:
Side Impact Protection, 37025–37028
NOTICES
Agency Information Collection Activities; Proposals, Submissions, and Approvals:
Reports, Forms, and Recordkeeping Requirements, 37189–37191

National Institutes of Health
NOTICES
Meetings:
Eunice Kennedy Shriver National Institute of Child Health and Human Development, 37132–37133
Eunice Kennedy Shriver National Institute of Child Health and Human Development; Closed, 37133–37134
National Heart, Lung, and Blood Institute; Closed, 37132; 37134
National Institute of Diabetes and Digestive and Kidney Diseases; Closed, 37133

National Oceanic and Atmospheric Administration
PROPOSED RULES
Sea Turtle Conservation and Recovery Actions:
Intent To Prepare an Environmental Impact Statement and To Conduct Public Scoping Meetings, 37050–37052

NOTICES
Applications:
Marine Mammals; File No. 16510, 37063
Meetings:
Gulf of Mexico Fishery Management Council, 37063–37064
National Saltwater Angler Registry Program, 37064–37065
Permits:
Endangered Species; File Nos. 16266 and 16291, 37065
Marine Mammals; File No. 14502, 37065
Takes of Marine Mammals Incidental to Specified Activities:
Marine Geophysical Survey in Central-Western Bering Sea, August 2011; Correction, 37066–37069

National Park Service
NOTICES
National Register of Historic Places:
Pending Nominations and Related Actions, 37150–37151

National Science Foundation
NOTICES
Agency Information Collection Activities; Proposals, Submissions, and Approvals, 37158–37160

Nuclear Regulatory Commission
NOTICES
Environmental Impact Statements; Availability, etc.:
In-Situ Leach Uranium Milling Facilities; Lost Creek In-Situ Recovery Project, Sweetwater County, WY, 37160–37161

Postal Regulatory Commission
NOTICES
Meetings; Sunshine Act, 37161

Presidential Documents
ADMINISTRATIVE ORDERS
North Korea; Continuation of National Emergency (Notice of June 23, 2011), 37235–37238
Western Balkans; Continuation of National Emergency (Notice of June 23, 2011), 37239

Public Debt Bureau
See Fiscal Service

Research and Innovative Technology Administration
NOTICES
Competition for University Transportation Centers Program Grants, 37191

Rural Utilities Service
RULES
Standards and Specifications for Timber Products Acceptable for Use by Electric and Telecommunications Borrowers, 36961–36976

Securities and Exchange Commission
NOTICES
Agency Information Collection Activities; Proposals, Submissions, and Approvals, 37161–37162
Self-Regulatory Organizations; Proposed Rule Changes:
Fixed Income Clearing Corp., 37165–37166
NASDAQ OMX PHLX LLC, 37163–37165
Options Clearing Corp., 37162–37163

Small Business Administration
NOTICES
Disaster Declarations:
Illinois Disaster Number Il–00031, 37166
Oklahoma Disaster Number OK–00050, 37166
Major Disaster Declarations:
Kentucky; Amendment 7, 37166–37167
Surrender of Licenses of Small Business Investment Companies:
Pacific Northwest Partners, L. P., 37167

State Department
NOTICES
Continuation of Waiver Authority, 37167

Substance Abuse and Mental Health Services Administration
NOTICES
Agency Information Collection Activities; Proposals, Submissions, and Approvals, 37134–37135

Surface Transportation Board
NOTICES
Acquisition Exemptions:
Texas Department of Transportation Line of Union Pacific Railroad Co., 37191
Quarterly Rail Cost Adjustment Factor, 37191–37192
Trackage Rights Exemptions:
Lake Providence Port Commission and Delta Southern Railroad, Inc., 37192
Mid-Michigan Railroad, Inc., Texas Northeastern Railroad, Line of Texas Department of Transportation, 37192

Transportation Department
See Federal Aviation Administration
See Federal Motor Carrier Safety Administration
See Federal Transit Administration
See National Highway Traffic Safety Administration
See Research and Innovative Technology Administration
See Surface Transportation Board

Treasury Department
See Comptroller of the Currency
See Financial Crimes Enforcement Network
See Fiscal Service
See Internal Revenue Service
NOTICES
Agency Information Collection Activities; Proposals, Submissions, and Approvals, 37193
Privacy Act; Systems of Records, 37193–37194

U.S. Customs and Border Protection
NOTICES
Commercial Gaugers and Laboratories; Accreditations and Approvals:
Intertek Usa, Inc., 37135
Post-Entry Amendment (PEA) Processing Test:
Modification, Clarification, and Extension, 37136
Post-Summary Corrections to Entry Summaries Filed in ACE Pursuant to ESAR IV Test, 37136–37139

Veterans Affairs Department
RULES
Reimbursement Offsets for Medical Care or Services, 37202–37206

Separate Parts In This Issue

Part II
Veterans Affairs Department, 37202–37206

Part III
Health and Human Services Department, 37208–37234
Labor Department, Employee Benefits Security Administration, 37208–37234
Treasury Department, Internal Revenue Service, 37208–37234

Part IV
Presidential Documents, 37235–37239

Reader Aids

Consult the Reader Aids section at the end of this page for phone numbers, online resources, finding aids, reminders, and notice of recently enacted public laws.

To subscribe to the Federal Register Table of Contents LISTSERV electronic mailing list, go to http://listserv.access.gpo.gov and select Online mailing list archives, FEDREGTOC-L, Join or leave the list (or change settings); then follow the instructions.

CFR PARTS AFFECTED IN THIS ISSUE

A cumulative list of the parts affected this month can be found in the Reader Aids section at the end of this issue.

7 CFR
1728 36961
1755 36961

12 CFR
701 36976
750 36979

Proposed Rules:
4 37029
5 37029
7 37029
8 37029
28 37029
34 37029
45 37029
237 37029
324 37029
624 37029
703 37030
1221 37029

14 CFR
39 (2 documents) 36980, 36981
77 36983

Proposed Rules:
71 37034

15 CFR
734 36986
740 36986
743 36986
774 36986

21 CFR
50 36989
882 36993

26 CFR
1 (4 documents) 36993, 36995, 36996
54 (2 documents) 36996, 37208

Proposed Rules:
1 37034
54 37037

29 CFR
2590 37208

31 CFR
1010 37000

33 CFR
100 37000
117 (2 documents) 37001, 37002
165 (5 documents) 37002, 37005, 37007, 37009, 37012

Proposed Rules:
117 (2 documents) 37039, 37041

38 CFR
17 37202

40 CFR
141 37014
271 37021

Proposed Rules:
52 37044
171 37045
271 37048

45 CFR
147 37208

47 CFR

Proposed Rules:
1 37049
2 37049
22 37049
24 37049
27 37049
73 37049
90 37049
95 37049

49 CFR
595 37025

50 CFR

Proposed Rules:
223 37050

Rules and Regulations

Federal Register
Vol. 76, No. 122
Friday, June 24, 2011

This section of the FEDERAL REGISTER contains regulatory documents having general applicability and legal effect, most of which are keyed to and codified in the Code of Federal Regulations, which is published under 50 titles pursuant to 44 U.S.C. 1510.

The Code of Federal Regulations is sold by the Superintendent of Documents. Prices of new books are listed in the first FEDERAL REGISTER issue of each week.

DEPARTMENT OF AGRICULTURE

Rural Utilities Service

7 CFR Parts 1728 and 1755

Standards and Specifications for Timber Products Acceptable for Use by Rural Utilities Service Electric and Telecommunications Borrowers

AGENCY: Rural Utilities Service, USDA.

ACTION: Final rule.

SUMMARY: The Rural Utilities Service (RUS) is amending its regulations on Electric and Telecommunications Standards and Specifications for Materials, Equipment and Construction, by codifying specifications for wood poles, stubs and anchor logs, wood crossarms (solid and laminated), transmission timbers and pole keys, and for quality control and inspection of timber products. RUS is updating these specifications to conform with revisions to the American Wood Preservers' Association (AWPA) standards and follow agency policy on insurance requirements.

DATES: *Effective Date:* This final rule will become effective July 25, 2011.

Incorporation by Reference: The incorporation by reference of certain publications listed in this rule is approved by the Director of the Federal Register as of July 25, 2011.

FOR FURTHER INFORMATION CONTACT: Mr. H. Robert Lash, Transmission Branch, Electric Staff Division, Rural Utilities Service, U.S. Department of Agriculture, Room 1246, STOP 1569, 1400 Independence Ave., SW., Washington, DC 20250–1569; *telephone:* (202) 720–0486, or, *e-mail: Bob.Lash@wdc.usda.gov.*

SUPPLEMENTARY INFORMATION:

Executive Order 12866

This final rule is exempted from the Office of Management and Budget (OMB) review for purposes of Executive Order 12866 and, therefore, has not been reviewed by OMB.

Executive Order 12372

This final rule is excluded from the scope of Executive Order 12372, Intergovernmental Consultation, which may require consultation with State and local officials. A notice of final rule entitled ''Department Programs and Activities Excluded from Executive Order 12372'' (50 FR 47034) exempted the Rural Utilities Service loans and loan guarantees from coverage under this order.

Executive Order 12988

This final rule has been reviewed under Executive Order 12988, Civil Justice Reform. The Rural Utilities Service has determined that this rule meets the applicable standards provided in section 3 of the Executive Order. In addition, all State and local laws and regulations that are in conflict with this final rule will be preempted. No retroactive effect will be given to this final rule and in accordance with section 212(e) of the Department of Agriculture Reorganization Act of 1994 (7 U.S.C. 6912(e)) administrative appeal procedures, if any, must be exhausted before an action against the Department or its agencies may be initiated.

Executive Order 13132

This final rule will not have substantial direct effects on the States, on the relationship between the national government and the States, or on distribution of power and responsibilities among the various levels of government. Under Executive Order 13132, this final rule does not have sufficient federalism implications to require preparation of a Federalism Assessment.

Regulatory Flexibility Act Certification

The Rural Utilities Service has been determined that the Regulatory Flexibility Act is not applicable to this rule since USDA Rural Utilities Service is not required by 5 U.S.C. 551 *et seq.* or any other provision of the law to publish a notice of proposed rulemaking with request to the subject matter of this rule.

Information Collection and Recordkeeping Requirements

This information collection and recordkeeping requirements contained in this final rule are cleared under OMB control number 0572–0076 pursuant to the Paperwork Reduction Act of 1995 (44 U.S.C. Chapter 35, as amended).

Catalog of Federal Domestic Assistance

The program described by this final rule is listed in the Catalog of Federal Domestic Assistance Programs under No. 10.850, Rural Electrification Loans and Loan Guarantees. This catalog is available on a subscription basis from the Superintendent of Documents, U.S. Government Printing Office, Washington, DC 20402–9325, telephone number (202) 512–1800.

Executive Order 12372

This final rule is excluded from the scope of Executive Order 12372, Intergovernmental Consultation, which may require consultation with State and local officials. See the final rule related notice titled ''Department Programs and Activities Excluded from Executive Order 12372'' (50 FR 47034), advising that the Rural Utilities Service loans and loan guarantees are excluded from the scope of Executive Order 12372.

Unfunded Mandates

This final rule contains no Federal Mandates (under the regulatory provision of title II of the Unfunded Mandates Reform Act of 1995 [2 U.S.C. Chapter 25]) for State, local, and tribal governments or the private sector. Thus, this final rule is not subject to the requirements of sections 202 and 205 of the Unfunded Mandates Reform Act of 1995.

National Environmental Policy Act Certification

The Rural Utilities Service has determined that this final rule will not significantly affect the quality of the human environment as defined by the National Environmental Policy Act of 1969 (42 U.S.C. 4321 *et seq.*). Therefore, this action does not require an environmental impact statement or assessment.

General Discussion

A proposed rule entitled ''Standards and Specifications for Timber Products Acceptable for Use by Rural Development Utilities Programs'

Electric and Telecommunications Borrowers'' was published in the **Federal Register** on September 29, 2008 at 73 FR 56513, and the public was invited to submit comments on or before November 28, 2008. Comments were received and are addressed in the Summary of Comment section of this rule.

The Rural Utilities Service maintains bulletins that contain construction standards and specifications for materials and equipment. These standards and specifications apply to systems constructed by electric and telecommunications borrowers in accordance with the loan contract, and contain standard construction units, materials, and equipment units used on electric and telecommunications borrowers' systems. Bulletins 1728F–700, ''Specification for Wood Poles, Stubs and Anchor Logs''; 1728H–701, ''Specification for Wood Crossarms (Solid and Laminated), Transmission Timbers and Pole Keys''; and 1728H–702, ''Specification for Quality Control and Inspection of Timber Products'', establish standards for the manufacture and inspection of wood utility poles, crossarms and poles keys. The summary of the major changes to these three bulletins are as follows:

1. All references cited in these bulletins are updated to the latest edition.
2. The definition ''pole broker'' was added to the list of definitions to include as many organizations as possible to provide borrowers a source from which they might purchase wood products.
3. Allow borrowers six months to notify treating plants about poles not meeting the required preservative retention.
4. In accordance with RUS policy on insurance requirements for contractors working for borrowers, the specification was revised to require manufacturers and inspection agencies to maintain certain limits of liability and errors and omission insurance.
5. All poles are required to be sterilized during the conditioning or treating cycle. This sterilization should further reduce the number of poles with pre-treatment decay.
6. Required to brand independent inspection agency's identification on the face of the pole.
7. RUS revised the qualifications for inspectors and quality control personnel and will return to the qualifications from the 1987 edition of the specifications.
8. Provisions are added to further clarify that wood products, producers and inspection agencies maintain the greatest degree of separation and eliminate any appearance of conflict of interest.

Summary of Comments

The Agency received comments and recommendations in response to the proposed rule from the following organizations: North American Wood Pole Council (NAWPC), McFarland Cascade, Cox Industrial Group, Wood Quality Control (WQC), Cox Industrial Group, Lee Inspection and Consulting Services, A.W. Williams Inspection Co. (AWW), Texas Electric Cooperatives (TEC), Timber Products Inspection and Dis-Tran Wood Products. No comments from any other sources were received. These comments and recommendations and the Agency's responses are summarized as follows:

Comment: Lee Inspection, NAWPC, TEC, and AWW questioned the need for liability insurance and errors and emission insurance and the amount of coverage.

Agency Response: RUS has required outside contractors doing work for borrowers to have high levels of liability insurance for many years. The insurance requirement was added to stay in line with present agency practices. The proposed insurance was reviewed and the errors and omission insurance requirement was eliminated for pole and crossarm producers. Since inspection agencies are performing a service, their liability and errors and omissions insurance requirement remains.

Comment: NAWPC and Timber Products Inspection questioned the need to treat kiln dried poles within 30 days after drying.

Agency Response: Paragraph 4.2.1 of Bulletin 1728F–700 dated September 1993 requires that ''kiln dried poles shall be treated within 1 month from the time they are removed from the kiln.'' This has been an RUS requirement for nearly twenty years and RUS believes that this requirement is needed.

Comment: NAWPC and Timber Products Inspection questioned why there is an inconsistency in paragraph 8.1 of Bulletin 1728F–700 concerning sterilization of Douglas fir poles.

Agency Response: The sterilization time for Douglas-fir is revised to be in line with other species.

Comment: McFarland, NAWPC and Timber Products Inspection suggested the inclusion of the modified full cell process to help control overtreatment.

Agency Response: The modified full cell process was added as suggested.

Comment: Timber Products Inspection pointed out that the maximum temperature for treatment in Western Red Cedar in the table in paragraph 8.2 of Bulletin 1728F–700 is not in agreement with American Wood Protection Association Standards.

Agency Response: Bulletin 1728F–700 was revised to meet the AWPA standard.

Comment: NMWPC, Timber Products Inspection and TEC mentioned that the wording in paragraph 9.6.2 of Bulletin 1728F–700 be revised from ''supplemental groundline type preservative'' to ''a preservative approved for use in ground line contact by the AWPA.''

Agency Response: Wording was revised to use ''a preservative approved for use by AWPA.''

Comment: Lee Inspection, NMWPC, Timber Products Inspection and AWW felt to certify inspectors and quality control personnel on the use of XRF equipment was unreasonable.

Agency Response: RUS agrees that this requirement may be difficult to achieve because there is no organization set up to perform this service. This provision was eliminated.

Comment: McFarland and TEC raised questions about the addition of the inspection agency's designation on the face brand and the use of tags.

Agency Response: This requirement does not add an extra line to the face brand. It replaces the Quality Assurance mark currently required on the second line of the brand. Treaters will be given 6 months from the publication date of this notice to revise their face brands. For treaters using metal tags, if the existing tag cannot be altered to show the independent inspection agency designation a separate tag showing this information shall be added. Metal tag users have three months to start revising their current tags or ordering an additional tags to show the agency information.

Comment: Lee Inspection disagrees with the RUS's proposal to not allow one independent inspection agency to subcontract their contracted inspection to another party.

Agency Response: When an Electric Borrower designates an inspection agency to act as their agent and inspect pole on their behalf the RUS believes they actually want that company to do the work. RUS believes that this requirement is reasonable.

Comment: Lee Inspection disagrees with the RUS's stand on not allowing independent inspection agencies to offer product warranties on inspected material.

Agency Response: RUS wants, as a secured lender, to eliminate any appearance of a conflict of interest between independent inspectors and

treaters. A product warranty put out by an inspection agency for a pole or crossarm produced by another company is unacceptable. RUS is not changing this provision.

Comment: Lee Inspection and AWW are concerned with the wording ''Failure of a selected third-party inspection agency to properly perform their required overview responsibilities may subject said agency to subsequent liability claims for unsatisfactory or inadequate product performance.''

Agency Response: This specific language will be from the final rule, however, the potential liability incurred by the inspection agency for any improper performance will be left up to the borrower.

Comment: Lee Inspection and AWW felt the frequency of the precision check by independent inspectors for the x-ray fluorescence instrument at treating plant weekly was too onerous.

Agency Response: In some cases this requirement could be too burdensome. In response, the frequency was changed to monthly for analysis of preservative and treated wood at the inspector's agency laboratory.

Comment: Cox Industrial Group and Dis-Tran wanted to require borrowers to store crossarms under cover to be eligible for the one year warranty.

Agency Response: The conformance period of one year from date of delivery should not be affected if arms are stored indoors, outdoors or installed on poles. As a result, RUS will not change the proposal.

Comment: Timber Products Inspection noted that the radial drilling depths were left off Table 10 in Bulletin 1728F–700.

Agency Response: This information was added back into the bulletin.

Comment: McFarland Cascade questioned the limiting of butt treated poles to arid regions.

Agency Response: Since butt treated poles have shown to have good durability in areas other than arid regions the final rule is revised to limit their use to low to moderate decay zones.

Comment: McFarland Cascade and Timber Products questioned allowing through boring for poles were raised.

Agency Response: In response to this, a section on allowing through boring was added.

Comment: WQC suggested that the Insured Warranty program be removed since it has not been used in many years.

Agency Response: This plan for supplying poles has continued to be included to keep several options open for suppliers. There have been a few instances where suppliers have tried to start using this program again.

Comment: WQC suggested that RUS limit the percentage of defects of a ''lot'' of poles from 15% to 5%, which is the AWPA limit, before the entire lot is rejected.

Agency Response: In response, RUS will revise their reject percentage to stay in line with AWPA Standards.

List of Subjects

7 CFR Part 1728

Electric power, Incorporation by reference, Loan programs—energy, Reporting and recordkeeping requirements, Rural areas.

7 CFR Part 1755

Incorporation by reference, Loan programs—communications, Reporting and recordkeeping requirements, Rural areas, Telephone.

For reasons set forth in the preamble, chapter XVII of title 7 of the Code of Federal Regulations is amended as follows:

PART 1728—ELECTRIC STANDARDS AND SPECIFICATIONS FOR MATERIALS AND CONSTRUCTION

■ 1. The authority citation for part 1728 continues to read as follows:

Authority: 7 U.S.C. 901 *et seq.;* 1921 *et seq.,* 6941 *et seq.*

■ 2. Revise § 1728.97 to read as follows:

§ 1728.97 Incorporation by reference of electric standards and specifications.

The materials listed below are incorporated by reference in the corresponding sections noted. The Director of the Federal Register approves the incorporations by reference in accordance with 5 U.S.C. 552(a) and 1 CFR part 51. A notice of any change in these materials will be published in the **Federal Register**. Standards and specifications materials are available for purchase at the addresses in the corresponding sections noted below. The materials incorporated by reference may also be inspected at the Rural Utilities Service's Program Development and Regulatory Analysis, Stop 1520, Room 5820–S, Washington, DC 20250–1522, call (202) 720–8674. Bulletins are also available for inspection at the National Archives and Records Administration (NARA). For information on the availability of these materials at NARA, call (202) 741–6030, or go to: *http://www.archives.gov/or* at the Office of the Federal Register, 800 North Capitol Street, NW., suite 700, Washington, DC, or go to: *http://www.archives.gov/federal_register/code_of_federal_regulations/ibr_locations.htm.*

(a) The following RUS bulletins are available from the Rural Utilities Service, Room 1246–S, U.S. Department of Agriculture, Washington, DC 20250. For information on the availability of this material, call (202) 720–1900. The bulletins containing construction standards (50–4 and 1728F–803 to 1728F–811) may be obtained from the Superintendent of Documents, U.S. Government Printing Office (GPO) for Washington, DC 20402, Phone: 1–866–512–1800 (toll-free) 202–512–1800 (DC Area) or go to the GPO Web site at: *http://www.gpoaccess.gov/about/index.html.*

(1) Bulletin 50–4 (D–801), Specification and Drawings for 34.5/19.9 kV Distribution Line Construction (11–86), incorporation approved for § 1728.98.

(2) Bulletin 50–15 (DT–3), RUS Specifications for Pole Top Pins with 1⅜′ Diameter Lead Thread (1–51), incorporation approved for § 1728.98.

(3) Bulletin 50–16 (DT–4), RUS Specifications for Angle Suspension Brackets (3–52), incorporation approved for § 1728.98.

(4) Bulletin 50–19 (DT–7), RUS Specifications for Clevis Bolts (8–53), incorporation approved for § 1728.98.

(5) Bulletin 50–23 (DT–18), RUS Specifications for 60″ Wood Crossarm Braces (2–71), incorporation approved for § 1728.98.

(6) Bulletin 50–31 (D–3), RUS Specifications for Pole Top Pins with 1'' Diameter Lead Threads (2–79), incorporation approved for § 1728.98.

(7) Bulletin 50–32 (D–4), RUS Specifications for Steel Crossarm Mounted Pins with 1″ Diameter Lead Threads (10–50), incorporation approved for § 1728.98.

(8) Bulletin 50–33 (D–5), RUS Specifications for Single and Double Upset Spool Bolts (2–51), incorporation approved for § 1728.98.

(9) Bulletin 50–34 (D–6), RUS Specifications for Secondary Swinging Clevises (12–70), incorporation approved for § 1728.98.

(10) Bulletin 50–35 (D–7), RUS Specifications for Service Swinging Clevises (9–52), incorporation approved for § 1728.98.

(11) Bulletin 50–36 (D–8), RUS Specifications for Service Deadend Clevises (9–52), incorporation approved for § 1728.98.

(12) Bulletin 50–40 (D–14), RUS Specifications for Pole Top Brackets for Channel Type Pins (9–51), incorporation approved for § 1728.98.

(13) Bulletin 50–41 (D–15), RUS Specifications for Service Wireholders

(11–51), incorporation approved for § 1728.98.

(14) Bulletin 50–55 (T–2), RUS Specifications for Overhead Ground Wire Support Brackets (5–53), incorporation approved for § 1728.98.

(15) Bulletin 50–56 (T–3), RUS Specifications for Steel Plate Anchors for Transmission Lines (12–53), incorporation approved for § 1728.98.

(16) Bulletin 50–60 (T–9), RUS Specification—Single Pole Steel Structures, Complete with Arms (12–71), incorporation approved for § 1728.98.

(17) Bulletin 50–72 (U–4), RUS Specification for Electrical Equipment Enclosures (5–35 kV) (10–79), incorporation approved for § 1728.98.

(18) Bulletin 50–73 (U–5), RUS Specifications for Pad-Mounted Transformers (Single and Three-Phase) (1–77), incorporation approved for § 1728.98.

(19) Bulletin 50–74 (U–6), RUS Specification for Secondary Pedestals (600 Volts and Below) (10–79), incorporation approved for § 1728.98.

(20) Bulletin 50–91 (S–3), RUS Specifications for Step-Down Distribution Substation Transformers (34.4–138 kV) (1–78), incorporation approved for § 1728.98.

(21) Bulletin 1728F–700, RUS Specification for Wood Poles, Stubs and Anchor Logs (3–2011), incorporation approved for §§ 1728.98, 1728.202.

(22) Bulletin 1728F–803, Specifications and Drawings for 24.9/14.4 kV Line Construction (10–98), incorporation approved for § 1728.98.

(23) Bulletin 1728F–804 (D–804), Specification and Drawings for 12.47/7.2 kV Line Construction, October 2005, incorporation approved for § 1728.98.

(24) Bulletin 1728F–806 (D–806), Specifications and Drawings for Underground Electric Distribution, June 2000, incorporation approved for § 1728.98.

(25) Bulletin 1728F–810, Electric Transmission Specifications and Drawings, 34.5 kV to 69 kV (3–98), incorporation approved for §§ 1728.98 and 1728.201.

(26) Bulletin 1728F–811, Electric Transmission Specifications and Drawings, 115 kV to 230 kV (3–98), incorporation approved for §§ 1728.98 and 1728.201.

(b) The following material is available for purchase from American Institute of Timber Construction (AITC), 7012 S. Revere Park Way, Englewood, Colorado 80112, telephone (303) 792–9559, web address: *https://www.aitc-glulam.org/index.asp.*

(1) AITC 200–2004, Manufacturing Quality Control Systems Manual For Structural Glued Laminated Timber, copyright 2004, (incorporation by reference approved for §§ 1728.201 and 1728.202.

(2) [Reserved]

(c) The following standards are available for purchase from the American National Standards Institute (ANSI), 25 West 43rd Street, New York, New York 10036, telephone (212) 642–4900, Web address: *http://www.ansi.org/.*

(1) ANSI O5.2–2006, American National Standard for Wood Products, Structural Glued Laminated Timber for Utility Structures, approved December 5, 2006, incorporation by reference approved for §§ , 1728.201, 1728.202.

(2) ANSI O5.3.2008, American National Standard for Wood Poles and Wood Products, Solid Sawn-Wood Crossarms & Braces—Specifications & Dimensions, approved July 15, 2008, incorporation by reference approved for § 1728.201.

(d) [Reserved]

(e) The following standards from the American Wood Protection Association (AWPA), Book of Standards, 2008 edition, are available for purchase from AWPA, P.O. Box 361784, Birmingham, AL 35236–1784, telephone 205–733–4077, *http://www.awpa.com/.*

(1) AWPA A1–06, *Standard Methods for Analysis of Creosote and Oil-Type Preservatives,* amended in 2006, incorporation by reference approved for §§ 1728.201 and 1728.202.

(2) AWPA A2–08, *Standard Methods for Analysis of Waterborne Preservatives and Fire-Retardant Formulations,* 2008, incorporation by reference approved for §§ 1728.201 and 1728.202.

(3) AWPA A3–08, *Standard Methods for Determining Penetration of Preservatives and Fire Retardants,* revised in 2008, incorporation by reference approved for §§ 1728.201and 1728.202.

(4) AWPA A5–05, *Standard Methods for Analysis of Oil-Borne Preservatives,* 2008, incorporation by reference approved for §§ 1728.201 and 1728.202.

(5) AWPA A6–01, *Method for the Determination of Oil-Type Preservatives and Water in Wood,* amended in 2001, incorporation by reference approved for § 1728.202.

(6) AWPA A7–04, *Standard for Wet Ashing Procedures for Preparing Wood for Chemical Analysis,* amended in 2004, incorporation by reference approved for § 1728.202.

(7) AWPA A9–01, *Standard Method for Analysis of Treated Wood and Treating Solutions By X-Ray Spectroscopy,* amended in 2001, incorporation by reference approved for §§ 1728.201 and 1728.202.

(8) AWPA M2–07, *Standard for Inspection of Wood Products Treated with Preservatives,* reaffirmed in 2007, incorporation by reference approved for § 1728.202.

(9) AWPA M3–05, *Standard Quality Control Procedures for Wood Preserving Plants,* amended in 2005, incorporation by reference approved for § 1728.202.

(10) AWPA P1/P13–06, *Standard for Creosote Preservative,* reaffirmed in 2006, incorporation by reference approved for §§ 1728.201 and 1728.202.

(11) AWPA P5–08, *Standard for Waterborne Preservatives,* revised in 2008, incorporation by reference approved for §§ 1728.201and 1728.202.

(12) AWPA P8–08, *Standard for Oil-Borne Preservatives,* revised in 2008, incorporation by reference approved for §§ 1728.201and 1728.202.

(13) AWPA P9–06, *Standards for Solvents and Formulations for Organic Preservative Systems,* copyright 2008, incorporation by reference approved for §§ 1728.201 and 1728.202.

(f) The following material is available from Southern Pine Inspection Bureau Standards, 4709 Scenic Highway, Pensacola, Florida 32504–9094, telephone (850) 434–2611. The web address for the Southern Pine Inspection Bureau is *http://www.spib.org/.*

(1) *Special Product Rules for Structural, Industrial, and Railroad-Freight Car Lumber,* effective October 15, 1991, incorporation by reference approved for § 1728.201.

(2) [Reserved]

(g) The following material is available for purchase from West Coast Lumber Inspection Bureau, P.O. Box 23145, Portland, Oregon 97281, telephone (503) 639–0651, fax (503) 684–8928. The web address for is *http://www.wclib.org/.*

(1) *Standard No. 17, Grading Rules for West Coast Lumber,* Revised January 1, 2004, incorporation by reference approved for § 1728.201.

(2) [Reserved]

■ 3. Add new § 1728.98 to read as follows:

§ 1728.98 Electric standards and specifications.

(a) To comply with this part, you must follow the requirements contained in the following REA/RUS bulletins. These bulletins are incorporated by reference in § 1728.97 of this part.

(1) Bulletin 50–4 (D–801), Specification and Drawings for 34.5/19.9 kV Distribution Line Construction (11–86).

(2) Bulletin 50–15 (DT–3), RUS Specifications for Pole Top Pins with 1⅜′ Diameter Lead Thread (1–51).

(3) Bulletin 50–16 (DT–4), RUS Specifications for Angle Suspension Brackets (3–52).

(4) Bulletin 50–19 (DT–7), RUS Specifications for Clevis Bolts (8–53).

(5) Bulletin 50–23 (DT–18), RUS Specifications for 60″ Wood Crossarm Braces (2–71).

(6) Bulletin 50–31 (D–3), RUS Specifications for Pole Top Pins with 1″ Diameter Lead Threads (2–79).

(7) Bulletin 50–32 (D–4), RUS Specifications for Steel Crossarm Mounted Pins with 1″ Diameter Lead Threads (10–50).

(8) Bulletin 50–33 (D–5), RUS Specifications for Single and Double Upset Spool Bolts (2–51).

(9) Bulletin 50–34 (D–6), RUS Specifications for Secondary Swinging Clevises (12–70).

(10) Bulletin 50–35 (D–7), RUS Specifications for Service Swinging Clevises (9–52).

(11) Bulletin 50–36 (D–8), RUS Specifications for Service Deadend Clevises (9–52).

(12) Bulletin 50–40 (D–14), RUS Specifications for Pole Top Brackets for Channel Type Pins (9–51).

(13) Bulletin 50–41 (D–15), RUS Specifications for Service Wireholders (11–51).

(14) Bulletin 50–55 (T–2), RUS Specifications for Overhead Ground Wire Support Brackets (5–53).

(15) Bulletin 50–56 (T–3), RUS Specifications for Steel Plate Anchors for Transmission Lines (12–53).

(16) Bulletin 50–60 (T–9), RUS Specification—Single Pole Steel Structures, Complete with Arms (12–71).

(17) Bulletin 50–72 (U–4), RUS Specification for Electrical Equipment Enclosures (5–35 kV) (10–79).

(18) Bulletin 50–73 (U–5), RUS Specifications for Pad-Mounted Transformers (Single and Three-Phase) (1–77).

(19) Bulletin 50–74 (U–6), RUS Specification for Secondary Pedestals (600 Volts and Below) (10–79).

(20) Bulletin 50–91 (S–3), RUS Specifications for Step-Down Distribution Substation Transformers (34.4–138 kV) (1–78).

(21) Bulletin 1728F–700, RUS Specification for Wood Poles, Stubs and Anchor Logs (3–2011).

(22) Bulletin 1728F–803, Specifications and Drawings for 24.9/14.4 kV Line Construction (10–98).

(23) Bulletin 1728F–804 (D–804), Specification and Drawings for 12.47/7.2 kV Line Construction, October 2005.

(24) Bulletin 1728F–806 (D–806), Specifications and Drawings for Underground Electric Distribution, June 2000.

(25) Bulletin 1728F–810, Electric Transmission Specifications and Drawings, 34.5 kV to 69 kV (3–98).

(26) Bulletin 1728F–811, Electric Transmission Specifications and Drawings, 115 kV to 230 kV (3–98).

(b) The terms ''RUS form'', ''RUS standard form'', ''RUS specification'', and ''RUS bulletin'' have the same meanings as the terms ''REA form'', ''REA standard form'', ''REA specification'', and ''REA bulletin'', respectively unless otherwise indicated.

■ 4. Sections 1728.201 and 1728.202 are revised to read as follows:

§ 1728.201 Bulletin 1728H–701, Specification for Wood Crossarms (Solid and Laminated), Transmission Timbers and Pole Keys.

(a) *General Provisions.* (1) This section implements contractual provisions between Rural Utilities Service (RUS) and borrowers receiving financial assistance. The contractual agreement between RUS and its borrowers requires the borrower's system to be constructed in accordance with agency accepted plans and specifications. Each electric borrower must purchase only wood crossarms produced in accordance with the specification in this section.

(2) Each electric borrower shall require each contractor to agree in writing to furnish only materials produced in accordance with the specifications in this section.

(3) This specification describes the minimum acceptable quality of wood distribution crossarms and transmission crossarms (hereinafter called crossarms) that are purchased by or for borrowers. Where there is conflict between this specification and any other specification referred to in this section, this specification shall govern.

(4) Various requirements relating to quality control and inspection are contained in § 1728.202 of this part, Specification for Quality Control and Inspection of Timber Products. Section 1728.201 of this part, ANSI O5.2, (incorporated by reference in § 1728.97), and ANSI O5.3, (incorporated by reference in § 1728.97) shall be followed exactly and shall not be interpreted or subjected to judgment by the quality control person or an independent inspector.

(5) The purchaser shall purchase from producers only material that meets the requirements of this specification. Each purchaser shall use a written purchase order to purchase material for use in financed systems in order to ensure compliance with the standards and specifications of this part. The written purchase order shall contain a provision that specifically requires the producer to comply with the provisions of this part. The purchase order shall contain a provision that specifically requires the producer to make the treating plant and storage areas available, during normal business hours, in order for representatives of either the purchaser or this agency to inspect such to determine compliance with the standards and specifications of this part.

(6) The producer shall provide the inspectors with full information (drawings, etc.) relating to the requirements contained in the purchase order which is supplementary to this specification.

(7) The producer shall maintain, or have access to, adequate laboratory facilities at or very near the treating plant, and all chemical tests, assays or analyses associated with the treatment shall be independently performed in this laboratory by both the quality control designee and the borrower's inspector. The producer may use a central laboratory as accepted on a case-by-case basis.

(8) Inspection and treatment of all timber products produced under this specification shall be performed after receipt of the order from the purchaser, except as provided for reserve treated stock.

(9) The testing and inspection of the lamination process shall be in accordance with AITC 200 (incorporated by reference in § 1728.97).

(10) With the exception of reserve treated stock, if requested by the borrower invoices for treated timber products shall be accompanied, in duplicate, by a copy of the producer's Certificate of Compliance and a copy of either the Independent Inspection Report or a Quality Assurance Plan Certificate. For reserve treated stock, inspection reports shall be available from the inspection agency. When shipped from reserve stock, the invoice shall bear an endorsement and a further certification by the producer that the material meets the requirements of this specification and any supplementary requirements cited in the purchase order under which it is purchased.

(11) Crossarms shall be warranted to conform to this specification. If any crossarm is determined to be defective or does not conform to this specification within 1 year after delivery to the borrower, it shall be replaced as promptly as possible by the producer. In the event of failure to do so, the purchaser may make such replacement and the cost of the crossarm, at destination, shall be recoverable from the producer.

(12) Crossarm producers shall take out and maintain liability insurance for not less than $1 million. Upon request, evidence of compliance shall be provided. The evidence shall be in the form of a certificate of insurance signed by a representative of the insurance company and include a provision that no changes in, or cancellation of, will be made without the prior written notice to the Director, Electric Staff Division, Rural Utilities Service.

(b) *Definitions.*

Agency refers to Rural Utilities Service (RUS), United States Department of Agriculture.

Arm refers to structural wood member used to support electrical conductors and equipment. Arm is used interchangeably with crossarm.

Certificate of compliance is a written certification by an authorized employee of the producer that the material shipped meets the requirements of this specification and any supplementary requirements specified in a purchase order from a borrower or the borrower's contractor.

Crossarm refers to a structural wood member used to support electrical conductors and equipment and is a term used interchangeably with arm.

Independent inspection relates to examination of material by an independent inspector employed by a commercial inspection agency.

Inspection means an examination of material in sufficient detail to ensure conformity to all phases of the specification under which it was purchased.

Lot is a quantity of crossarms of like size, conditioning, and fabrication, usually making up one treating charge.

Producer is used to describe the party who manufactures and/or treats crossarms.

Purchaser refers to either the borrower or contractors acting as the borrower's agent, except where a part of the specification specifically refers to only the borrower or the contractor.

Quality control designee refers to an individual designated by the producer to oversee proper operation of the manufacturer's internal quality control system.

Reserve treated stock consists of timber products treated in accordance with this specification, prior to and in anticipation of the receipt of specific orders, and held in storage ready for immediate shipment.

Supplier is a term used interchangeably with producer, or in some cases, may be the distributor selling crossarms to the borrower.

Treating plant is the organization that applies the preservative treatment to the crossarms.

(c) *Independent Inspection Plan.* This plan or a Quality Assurance Plan, as described in paragraph (e) of this section, is acceptable for supplying crossarms. All crossarms purchased under the Independent Inspection Plan, for use on an agency financed system shall be inspected by a qualified independent inspector in accordance with § 1728.202 of this part.

(1) The borrower has the prerogative to contract directly with the inspection agency for service. The borrower should, where practical, select the inspection agency so that continual employment is dependent only on performance acceptable to the borrower and in accordance with this specification. The selected inspection agency shall not be allowed to subcontract the service to any other inspection agency.

(2) The producer shall not be permitted to be a party to the selection of the inspection agency by the borrower and shall not interfere with the work of the inspector, except to provide notification of the readiness of material for inspection. To obtain inspection services for reserve stock, the producer may deal directly with the inspection agency. The producer shall not be permitted to treat material before it has been properly inspected and hammered with the appropriate inspection/quality assurance mark.

(3) The methods of inspection described in this section and in § 1728.202 of this part shall be used no matter which plan crossarms are produced under, i.e., Independent Inspection Plan, or Quality Assurance Plans, as described in this section

(d) *Quality Assurance Plans.* The producer shall furnish crossarms conforming to this specification as monitored by an acceptable Quality Assurance Plan. Borrower groups or agents for borrower groups endeavoring to operate Quality Assurance Plans shall submit their plan for assuring quality control to the Chairman, Technical Standards Committee ''A'', Electric Staff Division, Rural Utilities Service, Stop 1569, Washington, DC 20250–1569.

(e) *Material Requirements.* (1) *Material and Grade.* All crossarms furnished under this specification shall be free of brashy wood, decay, and insect holes larger than 3/32 of an inch and shall meet additional requirements as shown on specific drawings. Crossarms shall be made of one of the following:

(i) Douglas-fir which conforms to the applicable crossarm provisions of paragraphs 170 and 170a, or the applicable transmission arm provisions of paragraphs 169 and 169a of the Standard No. 17 Grading Rules for West Coast Lumber (incorporated by reference in § 1728.97). Only coastal origin Douglas-fir shall be used for Douglas-fir crossarms manufactured under this specification;

(ii) Southern Yellow Pine which conforms to the provisions of Dense Industrial Crossarm 65, as described in paragraph 31.2 in the 2001 Southern Pine Inspection Bureau's Special Product Rules for Structural, Industrial, and Railroad-Freight Car Lumber, (incorporated by reference at § 1728.97); or

(iii) Laminated wood crossarms shall conform to ANSI O5.2 (incorporated by reference at § 1728.97) and have at least the same load carrying capacity as the solid sawn arm it replaces. The load carrying capacity of the laminated arms shall be determined by one of the procedures outlined in ANSI O5.2.

(2) Borrowers may use alternative crossarms that are listed in Informational Publication 202–1, List of Materials Acceptable for Use on Systems of USDA Rural Utilities Service Borrowers. For information on the availability of this material, call RUS at (202) 720–1900, or go to: *http://www.rurdev.usda.gov/UEP_Engineering_LOM.html*.

(3) *Knots.* Sound, firm, and tight knots, if well spaced, are allowed.

(i) Slightly decayed knots are permitted, except on the top face, provided the decay extends no more than ¾ of an inch into the knot and provided the cavities will drain water when the arm is installed. For knots to be considered well spaced, the sum of the sizes of all knots in any 6 inches of length of a piece shall not exceed twice the size of the largest knot permitted. More than one knot of maximum permissible size shall not be in the same 6 inches of length. Slightly decayed, firm, or sound ''pin knots'' (⅜ of an inch or less) are not considered in size, spacing, or zone considerations.

(ii) Knots are subject to limits on size and location as detailed in Tables I and II.

TABLE I—KNOT LIMITS FOR DISTRIBUTION ARMS (SEE FIGURE 1, APPENDIX A)

[All dimensions in inches]

Class of knot and location	Maximum Knot Diameter	
	Close grain	Dense grain
Round Knots		
Single Knot: Maximum Diameter Center Section*		
Upper Half	¾	1
Lower Half	1	1¼
Elsewhere	1¼	1½
Sum of Diameters in a 6-Inch Length: Maximum:		
Center Section		
Upper Half	1½	2
Lower Half	2	2½
Elsewhere	2½	3

* No knot shall be closer than its diameter to the pole mounting hole.

TABLE II—KNOT LIMITS FOR TRANSMISSION ARMS (SEE FIGURE 2, APPENDIX A)

[All dimensions in inches]

Pole mounting hole zone *	Maximum diameter for Single Knot
UPPER HALF (inner zone)	¾.
UPPER HALF (outer zone)	1 for close grain. 1¼ dense grain.

Other locations transmission arm size **	Narrow face	Wide face (two sides)	
		Edge	Along centerline
4⅝ × 5⅝ or less	1	1¼	1¼
5⅝ × 7⅜	1¼	1⅜	1⅞
3⅝ × 9⅜	¾	1¾	2¼

* No knot shall be closer than its diameter to the pole mounting hole.
** For cross sections not shown, refer to grading rules.

(iii) Knot clusters shall be prohibited unless the entire cluster, measured on the worst face, is equal to or less than the round knot allowed at the specific location.

(iv) Spike knots shall be prohibited in deadend arms. Any spike knot across the top face shall be limited to the equivalent displacement of a knot ⅜ of an inch deep on one face and the maximum round knot for its particular location on the worst face, with a maximum width of 1 inch measured at the midpoint of the spiked section. Elsewhere across the bottom or side faces, spike knots shall not exceed ½ the equivalent displacement of a round knot permitted at that location, provided that the depth of the knot on the worst face shall not exceed the maximum round knot allowed at that location.

(v) Loose knots and knot holes shall be such that they can drain water when the arm is installed in its normal position. In the center section, upper half, loose knots shall not be greater than ½ the dimensions of round knots. Elsewhere, loose knots shall not be greater than the round knot dimension. Loose knots shall be prohibited in deadend arms.

(vi) All knots except those ''spike'' knots intersecting a corner shall be measured on the least diameter of the knot.

(vii) A knot shall be considered to occupy a specific zone or section if the center of the knot (i.e., pith of knot) is within the zone or on the zone's boundary.

(viii) If a round or oval knot appears on two faces and is in two zones, each face shall be judged independently. When this does not occur, average the least dimension showing on both faces. Knots which occur on only one face of a free of heart center (FOHC) arm shall be permitted to be 25 percent larger than the stated size.

(ix) Two or more knots opposite each other on any face shall be limited by a sum not to exceed the size of a maximum single knot permitted for the location. On all four faces, all knots shall be well spaced.

(x) Knots which have a maximum of ⅝ inch diameter may intersect pin holes in the center section. One inch diameter knots may intersect insulator pin holes elsewhere.

(4) *Miscellaneous characteristics, features, and requirements.* (i) The top face of distribution crossarms shall not have more than four medium pitch and bark pockets in 8-foot arms, and not more than five pitch and bark pockets in 10-foot arms. Elsewhere a maximum of six medium pockets in 8-foot arms and eight in 10-foot arms shall be permitted. Equivalent smaller pockets shall be permissible. An occasional large pocket is permissible.

(ii) Shakes shall be prohibited.

(iii) Prior to treatment on properly seasoned arms, single face checks shall not exceed an average penetration of ¼ the depth from any face and shall be limited to 10 inches long on the top face, and ⅓ the arm length on the other faces. Checks shall not be repeated in the same line of grain in adjacent pin holes. The sum of the average depths of checks occurring in the same plane on opposite faces shall be limited to ¼ the face depth.

(iv) Compression wood shall be prohibited on any face. Compression wood is permitted if wholly enclosed in

the arm, more than six annual rings from the surface, and not over ⅜ of an inch in width.

(v) Insect holes 3/32 of an inch and larger shall be prohibited. Insect pin holes (i.e. holes not over 1/16 of an inch diameter) shall be allowed if scattered and not exceeding 10 percent of the arm girth.

(vi) Wane shall be allowed on one edge, limited to approximately 1 inch measured across the corner. Outside of the top center section, an aggregate length not to exceed 2 feet may have wane up to 1½ inches on an occasional piece on one or both edges. Bark shall be removed.

(vii) Prior to and after preservative treatment, crook, bow, or twist shall not exceed ½ of an inch in 8 foot arms and ⅝ of an inch in 10 foot arms.

(f) *Manufacturing.* (1) All dimensions and tolerances shall conform to those shown on the drawings in this section or drawings supplied with the purchase order. Drawings supplied shall meet or exceed minimum dimensions and tolerances shown on the drawings in this section. Cross-sectional dimensions shall be measured and judged at about ¼ the arm length, except when the defects of ''skip dressing'' or ''machine bite or offset'' are involved.

(2) Lamination techniques shall comply with ANSI O5.2 (incorporated by reference at § 1728.97).

(3) Pin and bolt holes shall be smoothly bored without undue splintering where drill bits break through the surface. The center of any hole shall be within ⅛ of an inch of the center-line locations on the face in which it appears. Holes shall be perpendicular to the starting and finishing faces.

(4) *Shape.* The shape of the arms at any cross section, except for permissible wane, shall be as shown on the respective drawings in this section or supplied with the order. The two top edges may be either chamfered or rounded ⅜ of an inch radius. The two bottom edges shall be slightly eased ⅛ of an inch radius for the entire length.

(5) *Incising.* The lengthwise surfaces of Douglas-fir crossarms shall be incised approximately ¼ of an inch deep. The incision shall be reasonably clean cut with a spacing pattern that ensures uniform penetration of preservative.

(6) *Quality of work.* All crossarms shall be of the highest quality production. Crossarms shall be dressed on four sides, although ''hit and miss skips'' may occur on two adjacent faces on occasional pieces.

(g) *Conditioning prior to treatment.* (1) All solid sawn crossarms shall be made of lumber which has been kiln-dried. Douglas-fir arms shall have an average moisture content of 19 percent or less, with a maximum not to exceed 22 percent in a single arm. Southern Yellow Pine arms shall have an average moisture content of 22 percent or less, with a maximum not to exceed 30 percent in a single arm.

(2) Moisture content levels shall be measured at about ¼ the length and at a depth of about ⅕ the crossarm's thickness. Additionally, the moisture content gradient between the shell (i.e. ¼ of an inch deep) and the core (i.e. about 1 inch deep) shall not exceed 5 percentage points.

(3) A minimum of at least 20 solid sawn crossarms per treating charge shall be measured to verify moisture content and shall be duly recorded by the quality control designee.

(4) The moisture content of lumber used in laminating shall, at the time of gluing, be within the range of 8 to 12 percent, inclusive.

(h) *Preservatives.* (1) The preservatives shall be:

(i) Creosote which conforms to the requirements of AWPA P1/13–06 (incorporated by reference at § 1728.97), when analyzed in accordance with the methods in AWPA A1–06 (incorporated by reference at § 1728.97), sections 2, 3, 4, either 5 or 9, and 6;

(ii) Pentachlorophenol which contains not less than 95 percent chlorinated phenols and conforms to AWPA P8–08 (incorporated by reference at § 1728.97) when analyzed in accordance with AWPA A5–05 (incorporated by reference at § 1728.97) or AWPA A9–01 (incorporated by reference at § 1728.97). The hydrocarbon solvents for introducing the preservative into the wood shall meet the requirements of AWPA P9–06 (incorporated by reference at § 1728.97) Type A;

(2) Waterborne Preservatives shall be any of the following:

(i) Ammoniacal Copper Arsenates (ACA) and Ammoniacal Copper Zinc Arsenate (ACZA) which shall meet the requirements of AWPA P5–08 (incorporated by reference at § 1728.97), when analyzed in accordance with methods in AWPA A2–08 (incorporated by reference at § 1728.97) or AWPA A9–01 (incorporated by reference at § 1728.97); and

(ii) Chromated Copper Arsenates (CCA) which shall meet the requirements of one of the formulations given in AWPA P5–08 (incorporated by reference at § 1728.97) sections 4, 5 or 6, and 10. Tests to establish conformity shall be made in accordance with AWPA A2–08 (incorporated by reference at § 1728.97) or A9–01 (incorporated by reference at § 1728.97).

(A) The pH of treating solutions of the waterborne preservatives shown in AWPA P5–08 (incorporated by reference at § 1728.97) section 10, shall be determined in accordance with AWPA A2–08, (incorporated by reference at § 1728.97) section 8.

(B) The oxide formulations of waterborne preservatives shall be supplied.

(C) Douglas-fir crossarms shall not be treated with CCA preservatives.

(D) Materials treated with waterborne preservatives shall be free of visible surface deposits.

(iii) Copper Naphthenate (CuN) concentrate used to prepare wood preserving solutions shall contain not less than 6 percent nor more than 8 percent copper in the form of CuN and shall conform to AWPA P8–08 (incorporated by reference at § 1728.97) when analyzed in accordance with AWPA A5–05 (incorporated by reference at § 1728.97). The hydrocarbon solvents for introducing the preservative into the wood shall meet the requirements of AWPA P9–06 (incorporated by reference at § 1728.97) Type A.

(i) *Preservative treatment.* (1) All timber products treated under this specification shall be treated by either a pressure or a thermal (non-pressure) process.

(2) These materials may be further conditioned by steaming, or by heating in hot oil (Douglas-fir), within the following limits:

	Time hours (max.)	Temperature
Steam	3	220° F
Heating in Preservation	3	210° F

(3) A final steam or hot oil bath may be used only to meet cleanliness requirements of paragraph (k) of this section. Total duration of the final steam bath shall not exceed 2 hours and the temperature shall not exceed 240 degrees Fahrenheit.

(j) *Results of treatments.* (1) The quality control designee shall test or supervise the testing of each treated charge for penetration and retention.

(2) *Method of sampling.* When testing penetration and retention, a borer core shall be taken from not less than 20 crossarms in each treating charge. The borings shall be taken from any face except the top face at a point as close to the end as possible, being at least 3 inches from the end of the arm and no closer than 3 inches from the edge of the holes. The bored holes shall be plugged with preservative-treated plugs driven into the arm. Borings from laminated arms shall not be taken from the same laminate unless there is an end joint separation.

(3) As determined in accordance with AWPA A3–08 (incorporated by reference at § 1728.97) all sapwood present in Douglas-fir or Southern Yellow Pine crossarms shall be completely penetrated with preservative. In the heartwood of Douglas-fir crossarms, the penetration shall be not less than 3 inches longitudinally from the edge of holes and ends, and at least 3/16 inch from the surface of any face.

(4) Retention of preservative in the outer 6/10 of an inch for Douglas-fir and one inch for Southern Yellow Pine assay zones at the treating plant shall be not less than:

Preservation	Retention (pcf)	AWPA analysis method **
Creosote	8	A6.
Pentachlorophenol	* 0.4	A5.
ACA, ACZA, or CCA	0.4	A2, A7, or A9.
Copper Naphthenate	0.04	A5, or A9.

* The pentachlorophenol retention is for the lime ignition method. The copper pyridine method, retention 0.36 pcf is required when timbers may have been in contact with salt water, and for all species native to the Pacific coast region. It is not required when it specifically states on the rough sawn material invoice that this material has not been in contact with salt water or is shown by analysis to have no additional chlorides present in the wood before treating.

** All the AWPA Analysis Methods are incorporated by reference at § 1728.97.

(5) Cleanliness of lengthwise surfaces of all crossarms shall be free from tarry, greasy, or sticky material, and from oil exudation and pentachlorophenol crystallization (blooming).

(6) Re-treatment of materials which do not meet the penetration and retention requirements of this specification may be done only twice. Initial treatment steaming time plus re-treatment steaming time, combined, shall not exceed time allowed in paragraph (i) of this section.

(k) *Marks and brands.* (1) All crossarms shall be legibly branded (hot brand) or die-stamped and to a depth of approximately 1/16 of an inch before treatment.

(2) The letters and figures shall be not less than 1/2 of an inch in height. The top of the brand shall be oriented to the top of the arm.

(3) The brand or die-stamp shall include:

(i) The manufacturer's identification symbol;

(ii) Month and year of manufacture;

(iii) Species of timber such as DF for Douglas-fir and SP for Southern Yellow Pine; and

(iv) The preservative notated with a C for creosote, P for penta, S for waterbornes, or N for Copper Naphthenate.

(4) An example is:

M–6–06 Manufacturer—Month—Year DF–P Douglas-fir—penta treated

(5) The brand or stamp shall be placed on either of the wide surfaces of the arms, oriented with letters right side up towards the top of the arm and preferably about 1 foot from the midpoint of the arm.

(6) Each producer should mark each type of arm in approximately the same location on the arm.

(7) Brands, inspection marks, or quality assurance marks shall be removed from arms that do not meet these specifications.

(l) *Storage.* (1) Producers may treat crossarms for reserve stock under any of the agency approved plans.

(2) Crossarms treated with oil-borne preservatives which have been held in storage for more than 1 year before shipment to the borrower, shall be re-assayed before shipment and shall be re-treated if found nonconforming for retention on orders placed in accordance with this section.

(3) Crossarms shall meet the assay after re-treatment in accordance with paragraph (k) of this section.

(4) Crossarms which are held in storage after final acceptance shall be stacked in piles or on skids in such a manner as to assure good ventilation. The stacks shall be covered or stored indoors for protection from the sun and weather to reduce checking, bending, and loss of preservative.

(m) *Drawings.* (1) The drawings of Appendix B of this section, Crossarm Drilling Guide, have a type number and show in detail the hole size, shape, and pattern desired for crossarms ordered under this specification.

(2) Purchase orders shall indicate the type crossarm required.

(3) Crossarms shall be furnished in accordance with the details of these drawings or in accordance with drawings attached to the purchase order.

(4) Appropriate drawings for transmission arms are to be specified and included with purchase orders. Technical drawings for transmission crossarms are published in Bulletin 1728F–811, ''Electric Transmission Specifications and Drawings, 115kV through 230kV'' (incorporated by reference at § 1728.97), and Bulletin 1728F–810, ''Electric Transmission Specification and Drawings, 34.5kV through 69kV'' (incorporated by reference at § 1728.97).

(n) *Destination inspection.* All crossarms shall meet or exceed their minimum dimensions for at least 1 year after date of delivery to the borrower.

BILLING CODE P

APPENDIX A to §1728.201 – DISTRIBUTION AND TRANSMISSION ARMS

DISTRIBUTION ARMS
Figure 1

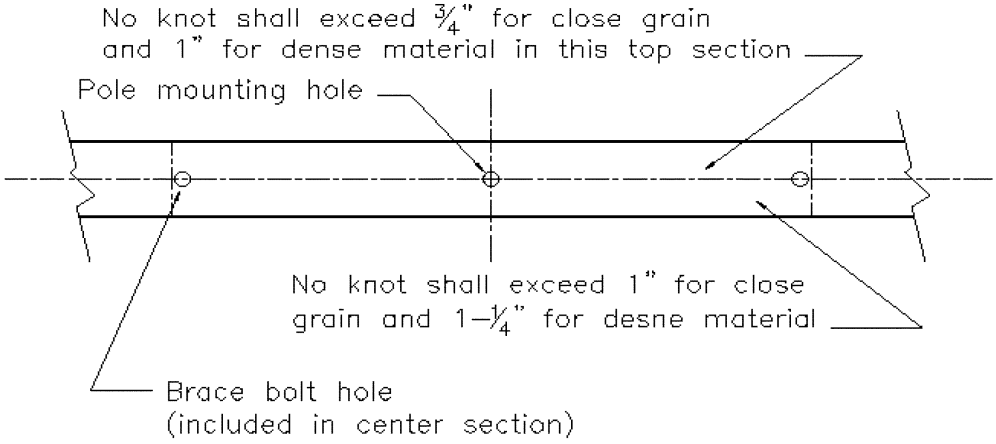

TRANSMISSION ARMS
POLE MOUNTING HOLE ZONE
Figure 2

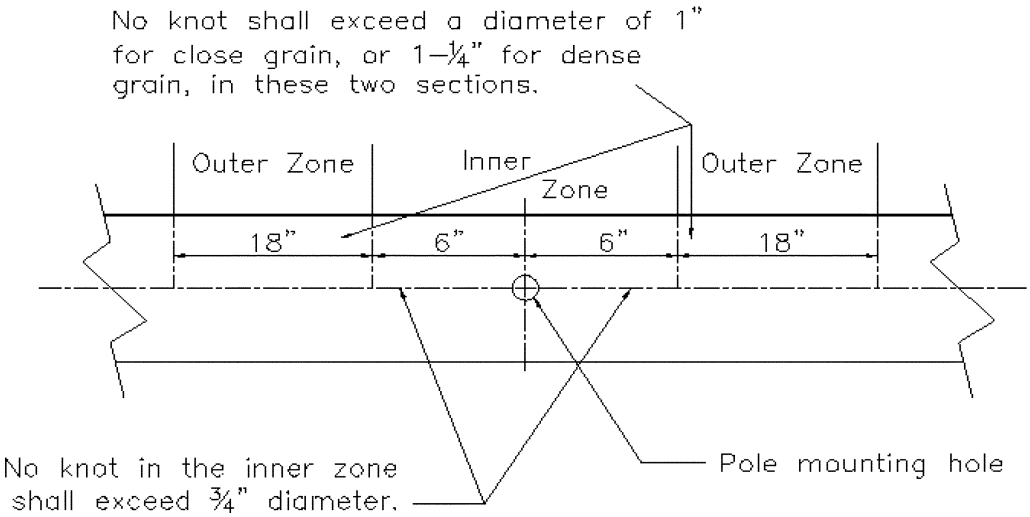

APPENDIX B to §1728.201 – CROSSARM DRILLING GUIDE

TOLERANCES AND SIZES OF HOLES			
NOMINAL		GO	NO GO
Ⓐ	11/16"	5/8"	3/4"
Ⓑ	7/16"	3/8"	1/2"
Ⓒ	9/16"	1/2"	5/8"

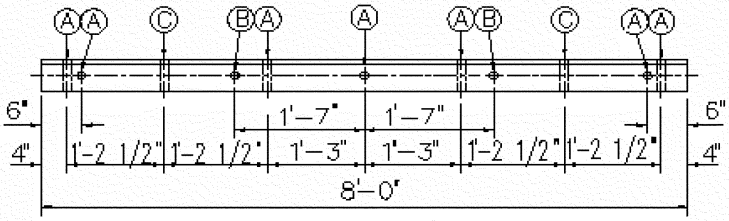

TYPE 04

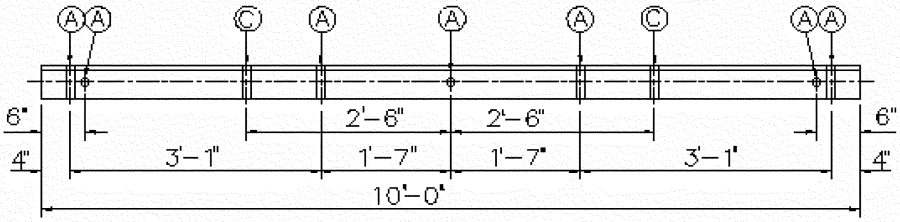

TYPE 05M

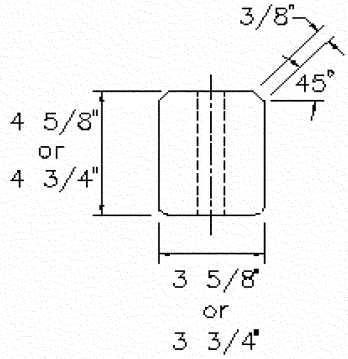

TYPICAL END SECTION

NOTES:

1. Holes are to be located within ±1/8"
2. Length of the crossarm is to be within ±1/4"
3. The tolerance of any cross section is +1/8" and −0" at time of manufacture.
4. All holes are to be drilled on centerlines of crossarm faces.

DISTRIBUTION CROSSARM DRILLING GUIDE

JUNE 2009		W2.1G
RUS		(Old M-19)

BILLING CODE C

APPENDIX C TO § 1728.201—METRIC CONVERSION FACTORS

To convert from	To	Multiply by
Foot (ft)	Meter (m)	0.3048
Inch (in)	Centimeter	2.54
Pound per cubic foot (pcf) (lb/ft^3)	Kilogram per cubic meter (kg/m^3)	16.01846
Pound per square inch (psi) (lb/in^2)	Kilogram per square meter (kg/m^2)	703.0696
Degrees Fahrenheit (°F)	Degrees Celsius (°C)	5/9(F° − 32)

§ 1728.202 Bulletin 1728H–702, Specification for Quality Control and Inspection of Timber Products.

(a) *Scope.* This specification describes in more detail the responsibilities and procedures pertaining to quality control for crossarms, as specified in section 1728.201 of this part, and poles, covered in Bulletin 1728F–700, ''Specification for Wood Poles, Stubs and Anchor Logs,'' incorporated by reference in § 1728.97 of this part and in § 1755.97 of 7 CFR part 1755.

(b) *General stipulations.* (1) Conformance of poles and crossarms to agency specifications for the most part is the responsibility of the producer's management.

A member of the producer's staff shall be designated quality control designee and charged with the responsibility for the exercise of proper quality control procedures.

(2) The requirements of AWPA M3–05 (incorporated by reference at § 1728.97), covering records, adequate laboratory, plant gauges, and other plant facilities including proper storage, shall be followed.

(3) The methods of inspection described in this section shall be used no matter which plan timber products are purchased under, i.e., Insured Warranty Plan, Independent Inspection Plan, or Quality Assurance Plans, as described in § 1728.201 of this part or Bulletin 1728F–700 (incorporated by reference at § 1728.97). The number of poles and crossarms actually inspected by monitors for quality control under a Quality Assurance Plan or the Insured Warranty Plan may vary from the number of poles and crossarms inspected under the Independent Inspection Plan. Under the Independent Inspection Plan, each pole and a sample number of crossarms shall be inspected.

(4) Under the Independent Inspection Plan, the borrower should designate in the purchase order which inspection agency it has selected. Unless the borrower contracts for inspection as a separate transaction, the treating company shall obtain the services of the borrower's designated inspection agency. For reserve treated stock for purchase under the Independent Inspection Plan, the treating company shall obtain the services of an inspection agency.

(5) Individual inspectors in the employ of Independent Inspection Agencies shall be experienced and competent. The inspector shall perform all phases of the inspection personally and in the proper sequence. The primary responsibility of the inspector is to determine, for the borrower, by careful inspection and verification, that the timber products, preservative, and treatment meet the requirements of Bulletins 1728F–700 (incorporated by reference at § 1728.97) and § 1728.201 of this part (Bulletin 1728H–701) and that the methods, storage facilities, and production equipment conform to applicable specifications. For details of the inspector's qualifications see Appendix A of this section.

(6) Independent inspection agencies and inspectors shall maintain their impartiality. To do so, inspection agencies, inspectors, producers and brokers must maintain the greatest degree of separation and eliminate even the appearance of a conflict of interest. Inspection agencies shall not receive gratuities from or enter into financial agreements, other than for inspection services, with suppliers for which they perform inspection. Inspection agencies shall not provide gratuities or free services to suppliers. Inspection agencies shall not offer product warranties on inspected material.

(7) Failure of an individual inspector to follow proper procedures or failure of an inspection agency to properly train and supervise inspectors or follow the appropriate RUS specifications constitutes grounds for RUS debarment of said company from future inspection of RUS financed material

(8) Inspection agencies shall have and maintain liability insurance in the amount of $500,000 and a surety bond or miscellaneous errors and omission insurance for consequential damages for not less than $250,000. Upon request, evidence of compliance to this requirement shall be forwarded to the agency. The evidence shall be in the form of a certificate of insurance or a Bond signed by a representative of the insurance or Surety Bonding company and include a provision that no change in, or cancellation of, will be made without the prior written notice to Chairman, Technical Standards Committee ''A'' (Electric).

(9) Inspection agencies shall maintain their own laboratory that is properly equipped, and capable of completely analyzing the respective preservatives and retentions, and at a minimum able to run referee methods. This laboratory shall be independent from any treating plant laboratory. Independent Inspection Agencies may use one central laboratory.

(10) Laminated materials manufactured for use on borrower systems shall comply with manufacturing and quality control requirements specified in ANSI O5.2 (incorporated by reference in § 1728.97). The product shall be marked and certified.

(i) Laminated material shall be inspected in accordance with ANSI O5.2, (incorporated by reference in § 1728.97).

(ii) Quality control of material shall be performed to determine conformance with § 1728.201 of this part and AITC 200, (incorporated by reference in § 1728.97).

(c) *Quality control and inspection procedures for product acceptance.* It is the responsibility of the plant quality control designee to perform the following procedures to ensure that a particular lot of material conforms to the requirements of the applicable Agency specification prior to treatment. After the plant quality control designee has performed these procedures, a particular lot of material shall be released to the inspector for verification of conformance.

(1) Poles can be purchased under any of the three purchase plans. These plans are Insured Warranty Plan, Independent Inspection Plan, or a Quality Assurance Plan. Under all of these plans, all poles in a lot shall be inspected by the plant quality control designee.

Under the Insured Warranty Plan and a Quality Assurance Plan, the number of poles inspected by a third party inspector may be less than every pole, depending on the terms of the plans.

(i) Ample space and assistance shall be provided by the treating plant for

handling and turning to ensure that the surfaces of all items can be adequately inspected.

(ii) Under the Independent Inspection Plan, all poles shall be inspected by the Independent Inspector for conformance to the requirements of Bulletin 1728F–700 (incorporated by reference at § 1728.97). If a pole is rejected and the cause of rejection is corrected, the rejected pole may be offered again for inspection as new material.

(iii) Dimensions, length, and circumference shall be measured by a standard steel tape to determine that they are in agreement with the details for class and length in the brand and butt stamp. If it is obvious by visual comparison with a measured pole that the brand information is correct, individual poles need not be measured. Pole circumference dimensions made prior to treatment shall govern acceptance. Reduction in dimension due to treatment and shipping shall be not more than 2 percent below the minimum for the pole class.

(iv) If 5 percent of the poles in a lot offered for inspection are defective, the inspector shall terminate the inspection. Re-examination of an entire lot by plant quality control shall be required when the number of rejected poles equals or exceeds 5 percent of the lot inspected. All defective or nonconforming poles either shall be removed from the lot or have their brands marked out.

(v) Poles in a lot shall be inspected for decay and all poles shall be of the same seasoning condition. If the plant quality control designee suspects that decay is present, a slice from both ends shall be cut for closer examination. If 3 percent of the inspected poles in a lot show evidence of decay, the entire lot shall be unconditionally rejected without further sorting.

(vi) Moisture content, when limited by the purchaser, as stated on the purchaser's purchase order, shall be measured by calibrated electronic moisture meter. Calibration of the meter shall include not only the zero settings for the X and Y readings, but also two resistance standards for 12 and 22 percent moisture content.

(vii) Material failing to conform for moisture content may be retested upon request after a recalibration of the instrument. The results of the second test shall govern disposition of the lot.

(viii) Re-examination for any mechanical damage or deterioration and for original acceptance shall be conducted on timber products not treated within 10 days after original inspection.

(2) Crossarms can be purchased only under either of two purchase plans. These plans are the Independent Inspection Plan or Quality Assurance Plans. Under the Independent Inspection Plan, crossarms are to be inspected prior to manufacture, during manufacture, and after treatment. Under a Quality Assurance Plan, crossarms are inspected according to the terms of the quality assurance program acceptable to Rural Utilities Service.

(i) Inspection prior to treatment shall include:

(A) Surface inspection of all ends of all arms. This is usually done on the stacks of arms prior to manufacture. Particular attention shall be paid to defects commonly found in the ends, such as compression wood, red heart and other forms of decay, shakes, splits, through checks, scantiness, honeycomb, and low density, determined by rings per inch and percent of summerwood. All non-conforming arms shall be rejected. Whenever the number of nonconforming arms is found to exceed 0.5 percent of the lot or one arm, whichever is greater, the entire lot shall be rejected for excess number of defective ends. After the producer has removed or marked out the defective material, the arms may be resubmitted for inspection.

(B) Surface inspection of the lengthwise sides performed on a random representative sample. The sample size shall equal 20 percent of a lot size or 200 arms, whichever is smaller. The inspector shall examine side surfaces as they are slowly rotated. When necessary, the rotation may be stopped for closer inspection. All non-conforming arms shall be rejected. Whenever the number of nonconforming arms is found to exceed 2 percent of the sample size, the entire lot shall be rejected. After the producer has removed or marked out the defective material, the arms may be resubmitted for inspection.

(C) Check of moisture content of the random sample by a calibrated moisture meter.

(D) Check of crossarm dimensions of the random sample measured after surfacing.

(ii) Inspection during manufacture shall consist of:

(A) Checking bolt and insulator pin holes for squareness and excessive splintering;

(B) Checking brands for completeness, location, and legibility; and

(C) Checking arms for conformance.

(iii) Under the Independent Inspection Plan, there shall be a final inspection after treatment for preservative retention and penetration and for damage.

(3) Structural glued laminated timber shall be tested and inspected in accordance with AITC 200 (incorporated by reference in § 1728.97). Grade of lumber shall be inspected by a qualified grader for specified quality, so marked. Adhesives used for all structural arms shall meet requirements of ANSI O5.2 (incorporated by reference at § 1728.97) paragraph 5.2. Melamine urea adhesives shall not be used. End joint spacing and limitations shall be in accordance with ANSI O5.2.

(d) *Preservatives.* (1) Creosote shall conform to the requirements of AWPA P1/P13–06 (incorporated by reference in § 1728.97) when analyzed by AWPA A–06, (incorporated by reference in § 1728.97) sections 2, 3, 4, either 5 or 9, and 6, as follows:

(i) Each occasional charge; and

(ii) The first charge and one of every five charges randomly selected in consecutive charges shall be analyzed.

(2) Solutions of waterborne preservatives shall be analyzed for components in accordance with AWPA A2–08 (incorporated by reference in § 1728.97)) or AWPA A9–01 (incorporated by reference in § 1728.97) and shall meet the requirements of AWPA P5–08 (incorporated by reference in § 1728.97) for composition. AWPA A2–08 shall be used as a referee method.

(3) Pentachlorophenol shall contain not less than 95 percent chlorinated phenols and should conform to AWPA P8–08 (incorporated by reference in § 1728.297), in hydrocarbon solvent AWPA P9–06, Type A (incorporated by reference in § 1728.97).

(4) Copper Naphthenate in hydrocarbon solvent AWPA P9–06 Type A (incorporated by reference in § 1728.97), shall contain not less than 6 percent nor more than 8 percent copper in the form of Copper Naphthenate and shall conform to AWPA P8–08 (incorporated by reference in § 1728.97), when analyzed in accordance with AWPA A5–05 (incorporated by reference in § 1728.97).

(e) *Plant facilities and inspection during treatment.* (1) Manufacturing and treating plant facilities shall conform to paragraph 3, AWPA M3–05 (incorporated by reference in § 1728.97), Pressure plants shall be equipped with recording instruments to register time, pressure, temperature and vacuum during each cycle of treatment. Pressure plants shall also be equipped with indicating thermometers and pressure and vacuum gauges to check the accuracy of the recorders. Work tanks shall be equipped with a thermometer. Thermal treating vats shall be equipped with a time and temperature recorder

and with an indicating thermometer. Temperature recording devices are not mandatory for plants treating exclusively with waterborne preservatives.

(2) Temperature and humidity readings throughout the kiln shall be recorded on a recording chart and verified by observation of direct reading equipment. Gauges and recording equipment shall be calibrated annually.

(3) Recording instruments shall be checked with calibrated indicating gauges and thermometers, per AWPA M3–05 (incorporated by reference in § 1728.97). Inaccuracies shall be referred to the treating plant for prompt correction. If an inaccuracy which indicates error resulting in non-compliance with this specification indicating possible damage to the material, the inspector shall reject the charge.

(f) *Results of treatment.* (1) Poles shall be tested for retention and penetration by means of a calibrated increment borer 0.2 inches ± 0.02 inches in diameter in accordance with procedures in AWPA M2–07 (incorporated by reference in § 1728.97). Under the Independent Inspection Plan, all treating charges shall be tested for retention and penetration. Plant quality control and independent inspection shall do their analyses separately. Under the Insured Warranty Plan and Quality Assurance Plans, the frequency of testing retention and penetration may vary according to the agency approved plan.

(i) Unless otherwise specified, borings shall be taken approximately 1 foot above the face brand to 1 foot below the face brand. For pressure treated Western Red Cedar and all butt treated poles, borings shall be taken approximately 1 foot below groundline.

(ii) Penetration compliance shall be determined in accordance with AWPA A3–08 (incorporated by reference in § 1728.97). Chrome Azurol S and Penta-Check shall be used to determine penetration of copper containing preservatives and penta, respectively.

(2) Retention sampling shall be when there are 20 or more poles in the treating charge, the retention sample for creosote shall consist of 20 assay zones from southern pine and Douglas-fir poles. All poles in charges with fewer than 20 poles shall be bored once. Charges with less than 15 poles shall be bored once and bored again on a random basis to obtain a minimum of 15 assay zones.

(i) Retention samples shall be taken from 20 poles in charges of 20 or more poles.

(ii) Retention samples for Alaska yellow, western red, and northern white cedars shall consist of a minimum of 30 assay zones for creosote and waterborne preservatives. For penta charges of fewer than 30 poles, the sample shall contain the assay zone from each pole in the lot.

(iii) Retention samples shall consist of borings, representative of pole volumes for each class and length in the charge. Further selection and marking of poles of mixed seasoning, volume, and location on the tram shall be made as illustrated in the following table:

Number of poles	Class/length	Vol. in cu. ft.	% of total volume	Number of borings
27	7/30	232	15	3
26	4/35	447	29	6
11	5/35	163	10	2
55 *	6/35	704	46	9
Total		1,526		

* If a portion of these poles were green and some partially seasoned, then the number of borings should reflect the approximate percentage of each.

(iv) When material in a lot consists of fewer pieces than the designated minimum number of samples for assay, additional borings shall be taken so as to make up at least the minimum sample, and in such manner that the sample is representative of the lot of material with respect to any variations in size, seasoning condition, or other features that might affect the results of treatment.

(v) Analyses for preservative retention shall be performed as follows:

(A) Creosote retention shall be analyzed by AWPA A6–01 (incorporated by reference in § 1728.97);

(B) Penta retention shall be analyzed by AWPA A5–05 (incorporated by reference in § 1728.97) or AWPA A9–01 (incorporated by reference at § 1728.97). Copper pyridine method is required when timber may have been in contact with salt water and for all species native to the Pacific coast region, unless the raw material invoice specifically states that the material either has not been in contact with salt water or has been shown by analysis to have contained no additional chlorides before treating;

(C) Copper Naphthenate retention shall be analyzed by tests in accordance with AWPA A5–05 (incorporated by reference in § 1728.97) or AWPA A9–01 (incorporated by reference in § 1728.97);

(D) Waterborne preservatives retention shall be analyzed by tests in accordance with AWPA A2–08 (incorporated by reference in § 1728.97), AWPA A7–04 (incorporated by reference in § 1728.97); or AWPA A9–01 (incorporated by reference in § 1728.97); and,

(E) Prior to unloading a tram, the inspectors may take their own samples and analyze them concurrently with the quality control designee, but each shall work independently, and quality control data shall be presented before acceptance of the charge.

(3) The penetration sampling of poles shall conform as follows:

(i) Group A poles consist of poles with a circumference of 37.5 inches or less at 6 feet from butt.

(A) Bore 20 Group A poles or 20 percent of the poles, whichever is greater. Accept if 100 percent of the sample conform; otherwise, bore all poles.

(B) Re-treat the charge if more than 5 percent of the borings are found to be nonconforming.

(C) Re-treat all nonconforming poles if 5 percent or fewer fail the requirement.

(ii) Group B poles consist of poles with circumference greater than 37.5 inches at 6 feet from the butt.

(A) For Group B poles 45 feet and shorter, bore each pole and re-treat only those found to be nonconforming, unless more than 5 percent fail; in that case, re-treat the entire lot.

(B) For Group B 50 feet and longer, bore each pole twice at 90 degrees apart around the pole and accept only those poles conforming to the penetration requirement in both borings. All nonconforming poles may be re-treated only twice.

(iii) All bored holes (nominal 0.2 of an inch diam. bit) shall be promptly filled with treated, tight-fitting wood plugs.

(4) Under the Independent Inspection Plan, all treated charges of crossarms shall be tested for retention and penetration. Plant quality control inspectors and independent inspectors shall do their analyses independently. Under the Quality Assurance Plans, the frequency of testing retention and penetration may vary according to the plan.

(i) The penetration and retention sample shall consist of 20 (48 for creosote) outer 6/10 of an inch for Douglas-fir and 1 inch for Southern Yellow Pine zones from borings taken from any face except the top face at a location as close to the end as possible being at least 3 inches from the end of the arm and no closer than 3 inches from the edge of any holes. For laminated material, borings shall be taken from laminates on a random basis.

(ii) Preservative penetration shall be tested by taking not less than 20 borings from 20 crossarms in each charge, determined in accordance with AWPA A3–08 (incorporated by reference in § 1728.97). Chrome Azurol S and Penta-Check shall be used to determine penetration of copper containing preservatives and penta, respectively.

(5) Laminated material shall be checked for any evidence of delamination due to treatment and for the identifying quality stamp of AITC or American Plywood Association (APA).

(6) If used for analysis, x-ray fluorescence instruments (XRF) shall be accurate and reliable, and they shall generate reproducible results. Instruments shall have thorough instructions which should include recommendations on drying techniques, equipment, and density calculations. These drying recommendations shall be followed when using XRF instruments.

(7) To check the precision and accuracy of the in-plant x-ray fluorescence units (XRF) being used by producers, at least once monthly the independent inspector shall take a retention sample previously analyzed in the producer's laboratory and rerun it in the inspection agency's own laboratory. This sample shall be run utilizing either the XRF or recognized referee method for the given preservative. If the analytical results are within ± 5% of retention value that was previously obtained on the sample using the plant's XRF unit, the plant instrument needs no further calibration. All XRF units maintained by independent agencies as part of their required laboratories shall be calibrated at least quarterly either by the referee method for each preservative treatment being analyzed by said agency or by comparison with a set of graduated treated wood standards.

(8) Each independent inspector and plant quality control personnel that use XRF instruments, shall be properly trained in the analysis of treated wood and preservatives under the supervision of a competent instructor. Proof of training shall be kept on file.

(g) *Product acceptance.* Under the Independent Inspection Plan, the inspector shall signify acceptance by marking each piece of accepted material with a clear, legible hammer stamp in one end prior to treatment and in the other end after treatment. The inspector shall personally mark each piece, and shall not delegate this responsibility to another person.

(1) Charge Inspection Reports.

(2) Inspection Reports shall include the following:

(i) Total pieces offered by the producer, number of pieces rejected and cause of rejection;

(ii) Conditioning details of the material prior to treatment;

(iii) Copy of preservative analysis by preservative supplier;

(iv) The details of treatment; and

(v) The results of treatment. Results shall include the following:

(A) The depth of penetration for each sample and a summary of all poles rejected for insufficient penetration;

(B) Separate worksheets for retention analyses, prepared by quality control designee and independent inspector.

(3) On each inspection report the independent inspector and the plant quality control designee shall certify, in writing, that the material listed on the report has been inspected before and after treatment, and that the preservative used was analyzed in accordance with the requirements of this section.

(4) Each inspector or inspection agency shall permanently retain for a period of 1 year a copy or transcript of each report of inspection, together with laboratory worksheets covering retention by assay and preservative analyses for the purchaser, and on request shall furnish a copy or transcript of any of these reports to the Chairman, Technical Standards Committee ''A'', Electric Staff Division, Rural Utilities Service, Washington, DC 20250–1569.

(h) *Charge numbers on re-treat poles.* (1) The letter ''R'' shall be added to the original charge number in the butts of all poles that are re-treated for insufficient penetration or retention of preservative.

(2) All poles that fail to meet treatment requirements after two re-treatments shall be permanently rejected.

(i) *Safety provisions.* Poles intended for agency borrowers shall not be inspected when, in the opinion of the inspector, unsafe conditions are present.

APPENDIX A TO § 1728.202—INSPECTOR'S QUALIFICATIONS

Inspection agencies should see that inspectors assigned to the inspection of timber products and treatment for borrowers are competent and experienced. In general, any of the following examples are considered as minimum qualifying experience before a new inspector may be permitted to inspect timber products for borrowers:

(a) Three years' experience as an inspector of timber and the preservative treatment of timber; or

(b) Three years' experience in timber treating plant quality control work; or

(c) Under the direct, on site, supervision of an experience, well-qualified inspector, the prospective inspector shall have performed the following:

(1) Inspected at least 10,000 poles and/or crossarms ''in the white.''

(2) Checked preservative penetration results on at least 10,000 poles and crossarms;

(3) Made at least 100 wood assays for preservative retention;

(4) Made at lease 25 analyses of each type preservative used on material the person is assigned to inspect; and

(d) In both (a) and (b) of this Appendix A, the experience should be not less than that required in (c).

(e) Inspectors experienced in the inspections of one product, such as poles, should not be qualified to inspect another product, such as crossarms, until the above experience is gained for each respective product.

(f) The inspector should be especially well informed in wood preservation and the operation of a timber treating plant, and be competent in preservative analysis and other laboratory work.

(g) In all cases, an inspector should be thoroughly instructed in the application of the specifications and the standards pertaining thereto before being permitted to independently inspect timber products and the treatments applied to them. Knowledge of these specifications and standards, as well as the inspector's proficiency, may be checked routinely by members of the agency staff.

PART 1755—TELECOMMUNICATIONS STANDARDS AND SPECIFICATIONS FOR MATERIALS, EQUIPMENT AND CONSTRUCTION

■ 4. The authority citation for part 1755 continues to read as follows:

Authority: 7 U.S.C. 901 *et seq.,* 1921 *et seq.,* 6941 *et seq.*

■ 5. Revise § 1755.97 to read as follows:

§ 1755.97 Telephone standards and specifications.

(a) To comply with the provisions of this part, you must follow the requirements set out in the following RUS telecommunications bulletins. These bulletins are approved for

incorporation by reference by the Director of the Office of the Federal Register in accordance with 5 U.S.C. 552(a) and 1 CFR part 51. These bulletins contain construction standards and specifications for materials and equipment and may be obtained from the Rural Utilities Service, Program Development and Regulatory Analysis, 1400 Independence Ave., SW., Stop 1522, Room 4028 South Building, Washington, DC 20250–1522, phone (202) 720–8674. The bulletins are available for inspection at RUS, at the address above, and at the National Archives and Records Administration (NARA). For information on the availability of this material at NARA, call 202–741–6030, or go to: *http://www.archives.gov/federal_register/code_of_federal_regulations/ibr_locations.html.* These materials are incorporated as they exist on the date of the approval and notice of any change in these materials will be published in the **Federal Register.** The terms ''RUS form'', ''RUS standard form'', ''RUS specification'', and ''RUS bulletin'' have the same meaning as the terms ''REA form'', ''REA standards form'', ''REA specification'', and ''REA bulletin'', respectively, unless otherwise indicated. For information on other standards incorporated by reference into this part see *§ 1755.901.*

(b) The following RUS bulletins are available from the Superintendent of Documents, U.S. Government Printing Office (GPO) for Washington, DC 20402, *Phone:* 1–866–512–1800 (toll-free) 202–512–1800 (DC Area) or go to the GPO Web site at: *http://www.gpoaccess.gov/about/index.html.*

(1) Bulletin 345–39, RUS specification for telephone station protectors, August 19, 1985.

(2) Bulletin 345–50 PE–60, RUS specification for trunk carrier systems, September 1979.

(3) Bulletin 345–54 PE–52, RUS specification for telephone cable splicing connectors, December 1971.

(4) Bulletin 345–55 PE–61, RUS specification for central office loop extenders and loop extender voice frequency repeater combinations, December 1973.

(5) Bulletin 345–65, PE–65, Specification for shield bonding connectors, March 22, 1985.

(6) Bulletin 345–66 PE–64, RUS specification for subscriber carrier systems, September 1979.

(7) Bulletin 345–69 PE–29, RUS specification for two-wire voice frequency repeater equipment, January 1978.

(8) Bulletin 345–72 PE–74, RUS specification for filled splice closures, October 1985.

(9) Bulletin 345–78 PE–78, RUS specification for carbon arrester assemblies for use in protectors, February 1980.

(10) Bulletin 345–180 Form 397a, RUS specifications for voice frequency repeaters and voice frequency repeatered trunks, January 1963.

(11) Bulletin 345–183 Form 397d, RUS design specifications for point-to-point microwave radio systems June 1970.

(12) Bulletin 345–184 Form 397e, RUS design specifications for mobile and fixed dial radio telephone equipment May 1971.

(13) Bulletin 1728F–700, RUS Specification for Wood Poles, Stubs and Anchor Logs, (3–2011).

(14) Bulletin 1753F–150 Form 515a, Specifications and Drawings for Construction of Direct Buried Plant, September 30, 2010.

(15) Bulletin 1753F–151 Form 515b, Specifications and Drawings for Construction of Underground Plan, September 12, 2001.

(16) Bulletin 1753F–152 Form 515c, Specifications and Drawings for Construction of Aerial Plant, September 17, 2001.

(17) Bulletin 1753F–153 Form 515d, Specifications and Drawings for Service Installation at Customer Access Locations, September 17, 2001.

Dated: May 31, 2011.

Jonathan Adelstein,

Administrator, Rural Utilities Service.

[FR Doc. 2011–14567 Filed 6–23–11; 8:45 am]

BILLING CODE P

NATIONAL CREDIT UNION ADMINISTRATION

12 CFR Part 701

RIN 3133–AD76

Sample Income Data To Meet the Low-Income Definition

AGENCY: National Credit Union Administration (NCUA).

ACTION: Final rule.

SUMMARY: The NCUA is amending its regulation to permit federal credit unions (FCUs) that do not qualify for a low-income designation using the geo-coding software the agency has developed for that purpose to submit an analysis of a statistically valid sample of member income data as evidence they qualify for the designation. The final rule, by permitting FCUs to use a statistically valid sample of member incomes drawn from loan files or a survey, eases the burden on FCUs seeking to qualify for a low-income designation. The final rule is very similar to the proposed, with additional wording about not combining a survey and loan file review.

DATES: This rule is effective July 25, 2011.

FOR FURTHER INFORMATION CONTACT: The following agency staff may be contacted at the address or the telephone numbers provided here: John Worth, Chief Economist, Office of the Chief Economist, telephone (703) 518–6308; Olga Bruslavski, Economist, Office of the Chief Economist, (703) 518–6495; Robert Leonard, Director of Consumer Access, Office of Consumer Protection, (703) 518–1143; Regina Metz, Staff Attorney, Office of General Counsel, (703) 518–6540; National Credit Union Administration, 1775 Duke Street, Alexandria, Virginia 22314–3428.

SUPPLEMENTARY INFORMATION:

Background

The Federal Credit Union Act (Act) authorizes the NCUA Board to define ''low-income members'' so that credit unions with a membership predominantly consisting of low-income members can benefit from certain statutory relief and receive assistance from the Community Development Revolving Loan Fund. 12 U.S.C. 1752(5), 1757a(b)(2)(A), 1757a(c)(2)(B), 1772c–1. Currently, NCUA uses geo-coding software during the examination processes to designate low-income credit unions, as follows:

> NCUA will make the determination of whether a majority of an FCU's members are low-income based on data it obtains during the examination process. This will involve linking member address information to publicly available information from the U.S. Census Bureau to estimate member earnings. Using automated, geo-coding software, NCUA will use member street addresses collected during FCU examinations to determine the geographic area and metropolitan area for each member account. NCUA will then use income information for the geographic area from the Census Bureau and assign estimated earnings to each member.

73 FR at 71910–11.

Credit unions also currently have the option to submit actual member data for purposes of qualifying for the low-income designation. NCUA's regulation at section 701.34(a)(3) provides that:

> Federal credit unions that do not receive notification that they qualify for a low-income credit union designation but believe they qualify may submit information to the regional director to demonstrate they qualify

for a low-income credit union designation. For example, federal credit unions may provide actual member income from loan applications or surveys to demonstrate a majority of their membership is low-income members. Actual member income data must be compared to a like category of statistical data, for example, actual individual member income may only be compared to total median earnings for individuals for the metropolitan area where they live or national metropolitan area, whichever is greater.

12 CFR 701.34(a)(3).

Proposed Rule

In December 2010, the NCUA Board proposed to amend NCUA's low-income rule to permit FCUs that would like the option to submit their own data for purposes of qualifying for the low-income designation to use a statistically valid, random sample of member incomes drawn from loan files or a member survey as the basis for the analysis. 75 FR 80364 (Dec. 22, 2010). The NCUA Board recognized FCUs may find it difficult to meet the requirement of collecting actual income data to establish the low-income status of at least 50% plus one of their members. An FCU conducting a survey of members asking its members to disclose their incomes can also be problematic. It can be difficult for the FCU to achieve a sufficient survey response rate and also members can be reluctant to disclose their income in a survey. Credit unions can also have difficulties obtaining sufficient member-income information from their loan applications because many credit unions have not made loans to over 50% of their members.

The proposed rule added language permitting FCUs to rely on a data sample as long as it meets certain criteria, and requiring the FCUs to submit a narrative describing sampling technique and evidence supporting its validity. The proposed rule required the random sample be representative of the FCU membership, sufficient in both number and scope on which to base conclusions, and have a minimal confidence level of 95% and a confidence interval of 5%.[1] The NCUA Board recognized the 95% confidence level and 5% confidence interval is a widely accepted and used threshold for statistical significance in research and policy analysis.

Comments

NCUA received eight comments on the proposed rule, published in the **Federal Register** on December 22, 2010. One commenter was a credit union, five were credit union leagues and trade associations, one was a bank trade association, and one was an individual. Most commenters strongly supported the goal of the proposed rule and agreed with the basic structure and framework NCUA proposed. The comments generally dealt with the specifics of the sampling approach and the NCUA review.

Three commenters expressed the need for additional language either in the text of the proposal or as a policy, letter or appendix to rule, which would address specifics of what is required of a credit union to qualify under the new approach. In response, NCUA stresses the rule will permit flexibility and will enable NCUA to work with potential candidates. NCUA may in the future consider issuing a letter to credit unions or other additional guidance on some of the specific elements of the rule if warranted.

Three commenters expressed concerns over the confidence level/interval specified in the proposal (95%/5%). Commenters differed in their approach: Two credit union trade associations recommended lowering the confidence level or interval (*e.g.,* to 95%/10%) in order to decrease the required sample size and burden. The bank trade association advocated increasing them (*e.g.* 99%/5% or 95%/1%) to avoid incorrect low-income credit union designations. In response, NCUA's position is that a 95%/5% benchmark provides a good balance. NCUA will consider a more flexible approach in the future if warranted.

The bank trade association recommended expanding the sampling population from members with loans to all members to increase the representativeness of the results. NCUA's position is that the rule already adequately addresses this concern. While allowing FCUs to sample only their members with loans, the proposed rule preamble extensively discusses the need to establish representativeness of the results, which can be achieved by a relatively simple comparison of incomes of all members to incomes of borrowers using the NCUA geo-coding software.

Three commenters recommended changing the ''look back'' period for loans, currently proposed at 5 years. As with the issue of the confidence measures above, commenters differed in their approach. Two credit union groups recommended increasing the look back to 10 years, while the bank trade association recommended shortening the period to no more than 2 years. The NCUA Board finds that the 5-year look back period provides a good balance. The Board emphasizes that the NCUA will consider a more flexible approach in the future if warranted.

The bank trade association advocated incorporating into the rule a method by which non-sensitive parts of FCU submissions can be made available to public. In response, NCUA's position is that the public is already permitted to request release of information under the Freedom of Information Act (FOIA) and will be able to obtain information as permitted through that process.

Two credit union groups recommend incorporating a timeframe for NCUA review. NCUA will review the applications for the low-income applications in a timely manner, but the final rule does not incorporate a timeframe into the regulation.

A credit union league suggested that NCUA allow FCUs to use geo-coding software alternative to the NCUA's tool to reduce the amount of required supporting documentation and to encourage leagues or their service corps to develop alternative tools.

NCUA believes that the use of any geo-coding software will produce similar results and the use of alternative software will increase the need for documentation and review relative to using the NCUA software.

One individual opposed the rule and recommended using actual incomes of the entire membership to make the determinations. NCUA previously addressed difficulties with the commenter's approach in the preamble to the proposed rule.

Final Rule

The NCUA Board has adopted a final rule very similar to the proposed rule, but includes new wording about not combining a survey and loan file review. As stated in the proposed rule, NCUA will evaluate the sample income data and the supporting narrative to verify it is a statistically valid, random sample. NCUA emphasizes that a sample has to be drawn entirely from loan files or entirely from the survey; no combination will be allowed, as there is no statistically valid methodology for combining a member survey and a loan file sampling approach.

NCUA will expect the narrative and supporting materials to address the following:

- Representativeness of Members. If a credit union is relying on income data

[1] Confidence levels and confidence intervals are statistical concepts that relate to the precision of the estimates produced by the sampling approach. Confidence level is the probability that the results of a sampling approach are within the confidence interval of the true answer. Confidence interval specifies the allowable margin of error around the true answer. There are a number of online resources that will compute required sample size given population, confidence levels, and confidence intervals including *http://www.raosoft.com/samplesize.html.*

drawn from its loan files, a credit union's submission needs evidence that members with loans are representative of the broader membership. If members with loans are not representative of the broader membership, the sampling methodology may not be appropriate. If a credit union is relying on income data from a survey, a credit union must provide evidence regarding the representativeness of its responses and adequacy of response rate.

- Income Definition and Timing: If relying on income data from a survey, the survey needs to be clear regarding its definition of income to ensure accurate responses from members and permit the credit union to use appropriate sources for comparison. If relying on income data from loan files, NCUA will expect the analysis to:
  - Clearly differentiate household versus individual income and income versus earnings in the loan files and use appropriate sources for comparison.
  - Address the age of the income data found in loan files by excluding loan files over five years old.
  - Address issues related to income verification, for example, addressing general credit union practices related to income verification and percentage of loans in the selected sample with unverified income. For surveys, address credit union verification, if any, of self-reported income information from members.
- Based on membership size and conservative statistical sampling practices and requirements, establish minimum sample size of members with income data from loan files or valid survey responses.
- Describe the method used for sampling loan files or conducting a survey, including any external validation or oversight.
- For income data from loan files, submit the well-documented data set used in the analysis and, for surveys, a copy of the survey, data summary, and narrative, as necessary to describe the conduct of the survey.

NCUA staff will review an FCU's submission, may contact the FCU to resolve any questions about its submission or to request additional information, and will inform the FCU whether it qualifies as expeditiously as possible. The final rule does not establish a time frame for a NCUA staff's review and determination because the Board believes a submission under the final rule is likely to present issues unique to the submitting FCU. The Board believes FCUs and the NCUA will benefit from having the flexibility to evaluate a credit union's submission and potentially resolve questions without regulatory time constraints. FCUs that are considering making a submission will find it helpful to contact NCUA staff to discuss their approach in providing sample income data before undertaking a review of loan files or conducting a survey.

Lastly, the final rule has possible implications for federally insured, state-chartered credit unions (FISCUs) under NCUA's regulations at section 741.204(b). Under this section, a FISCU must obtain a low-income designation to accept certain nonmember accounts, if these can be accepted under state law. Additionally, pursuant to section 705.3, in order to participate in the Community Revolving Loan Program, a low-income determination must be made pursuant to section 701.34. The appropriate state regulator makes the low-income designation, with the concurrence of NCUA, on the same basis as provided in section 701.34(a) for FCUs. 12 CFR 741.204(b).

Regulatory Procedures

Regulatory Flexibility Act

The Regulatory Flexibility Act requires NCUA to prepare an analysis to describe any significant economic impact any regulation may have on a substantial number of small entities. 5 U.S.C. 603(a). For purposes of this analysis, NCUA considers credit unions having under $10 million in assets small entities. Interpretive Ruling and Policy Statement 03–2, 68 FR 31949 (May 29, 2003). As of December 31, 2010, out of approximately 4,589 FCUs, 1,868 had less than $10 million in assets.

This rule directly affects all low-income FCUs, of which currently there are approximately 945. NCUA estimates approximately 533 low-income FCUs are small entities, but that only about two in a year will avail themselves of the option of providing actual data or sample data to meet the low-income criteria and receive the designation. Therefore, NCUA has determined this rule will not have an impact on a substantial number of small entities.

Small Business Regulatory Enforcement Fairness Act

The Small Business Regulatory Enforcement Fairness Act (SBREFA) of 1996, Public Law 104–121, provides generally for congressional review of agency rules. A reporting requirement is triggered in instances where NCUA issues a final rule as defined by Section 551 of the Administrative Procedures Act. 5 U.S.C. 551. The Office of Information and Regulatory Affairs (OIRA) is reviewing this final rule and we have recommended to OIRA that it is not a major rule for purposes of SBREFA.

Paperwork Reduction Act

The low-income rule contains a ''collection of information'' within the meaning of section 3502(3) of the Paperwork Reduction Act of 1995, 44 U.S.C. 3502(3), to the extent the rule permits FCUs that do not qualify under NCUA's geo-coding software the option of applying on the basis of actual membership income data and, as set out in this amendment to the rule, the additional option of submitting a random and statistically valid sample of membership income data to meet the rule's requirement that a majority of its members are low-income as defined in the rule.

The final rule will permit FCUs, which do not qualify for a low-income designation using the geo-coding software the NCUA has developed for that purpose, to submit an analysis of a statistically valid sample of their member income data as evidence the FCUs qualify. NCUA does not believe many FCUs are likely to apply for the designation on the basis of their member income data, perhaps two applications per year.

If relying on income data drawn from loan files, NCUA estimates an FCU that maintains its loan files electronically can use statistical computer programs that are freely available and its own staff. In that case, staff time is estimated at about 40 hours. If an FCU uses the services of a contractor or other outside party, such as a computer programmer, it is estimated those services would cost approximately $100 per hour, for a cost of approximately $4,000. If an FCU conducts a survey, various free computer programs are available on the internet. The costs of conducting a survey may vary significantly depending on the size of the membership. If an FCU uses the services of a contractor or other outside party to assist it in developing and conducting a survey, the costs are estimated at approximately $4,000 to $5,000.

In summary, NCUA estimates the total information collection burden represented by this proposal involving: 2 respondents, 80 annual burden hours, and an annual cost burden of approximately $10,000. NCUA has submitted these numbers to OMB and is awaiting review.

Executive Order 13132

Executive Order 13132 encourages independent regulatory agencies to consider the impact of their actions on state and local interests. In adherence to fundamental federalism principles,

NCUA, an independent regulatory agency as defined in 44 U.S.C. 3502(5), voluntarily complies with the executive order. The final rule would not have substantial direct effect on the states, on the connection between the national government and the states, or on the distribution of power and responsibilities among the various levels of government. NCUA has determined this final rule does not constitute a policy that has federalism implications for purposes of the executive order.

The Treasury and General Government Appropriations Act, 1999—Assessment of Federal Regulations and Policies on Families

NCUA has determined that this final rule would not affect family well-being within the meaning of section 654 of the Treasury and General Government Appropriations Act, 1999, Public Law 105–277, 112 Stat. 2681 (1998).

Agency Regulatory Goal

NCUA's goal is to promulgate clear and understandable regulations that impose minimal regulatory burden. We request your comments on whether the final amendment is understandable and minimally intrusive if implemented as proposed.

List of Subjects in 12 CFR Part 701

Credit unions, Low income, Nonmember deposits, Secondary capital, Shares.

By the National Credit Union Administration Board, on June 17, 2011.

Mary F. Rupp,

Secretary of the Board.

For the reasons stated above, NCUA amends 12 CFR part 701 as follows:

PART 701—ORGANIZATION AND OPERATIONS OF FEDERAL CREDIT UNIONS

■ 1. The authority for part 701 continues to read as follows:

Authority: 12 U.S.C. 1752(5), 1757, 1765, 1766, 1781, 1782, 1787, 1789; Title V, Pub. L. 109–351, 120 Stat. 1966.

■ 2. Amend § 701.34 by adding the following at the end of paragraph (a)(3):

§ 701.34 Designation of low-income status; Acceptance of secondary capital accounts by low-income designated credit unions.

(a) * * *

(3) * * * A Federal credit union may rely on a sample of membership income data drawn from loan files or a member survey provided the Federal credit union can demonstrate the sample is a statistically valid, random sample by submitting with its data a narrative describing its sampling technique and evidence supporting the validity of the analysis, including the actual data set used in the analysis. The random sample must be representative of the membership, must be sufficient in both number and scope on which to base conclusions, and must have a minimum confidence level of 95% and a confidence interval of 5%. A Federal credit union must draw the sample either entirely from loan files or entirely from the survey, and must not combine a loan file review with a survey. NCUA will provide a response to the Federal credit union within 60 days of its submission.

[FR Doc. 2011–15731 Filed 6–23–11; 8:45 am]

BILLING CODE 7535–01–P

NATIONAL CREDIT UNION ADMINISTRATION

12 CFR Part 750

RIN 3133–AD73

Golden Parachute and Indemnification Payments—Technical Correction

AGENCY: National Credit Union Administration (NCUA).

ACTION: Interim final rule with request for comments.

SUMMARY: NCUA is issuing a technical correction to its rule restricting a federally insured credit union (FICU) from making golden parachute and indemnification payments to an institution-affiliated party (IAP), published in the **Federal Register** of May 26, 2011. The amendment corrects an exception to the definition of golden parachute payment pertaining to plans offered under § 457 of the Internal Revenue Code.

DATES: Effective on June 27, 2011. Comments must be received by July 25, 2011.

ADDRESSES: You may submit comments by any of the following methods (please send comments by one method only):

Federal eRulemaking Portal: http://www.regulations.gov. Follow the instructions for submitting comments.

NCUA Web site: http://www.ncua.gov/Resources/RegulationsOpinionsLaws/ProposedRegulations.aspx. Follow the instructions for submitting comments.

E-mail: Address to *regcomments@ncua.gov.* Include ''[Your name] Comments on ''Interim Final Rulemaking for Part 750—Golden Parachute and Indemnification Payments—Technical Correction'' in the e-mail subject line.

Fax: (703) 518–6319. Use the subject line described above for e-mail.

Mail: Address to Mary Rupp, Secretary of the Board, National Credit Union Administration, 1775 Duke Street, Alexandria, Virginia 22314–3428.

Hand Delivery/Courier: Same as mail address.

Public Inspection: All public comments are available on the agency's Web site at *http://www.ncua.gov/Resources/RegulationsOpinionsLaws/ProposedRegulations.aspx* as submitted, except as may not be possible for technical reasons. Public comments will not be edited to remove any identifying or contact information. Paper copies of comments may be inspected in NCUA's law library at 1775 Duke Street, Alexandria, Virginia 22314, by appointment weekdays between 9 a.m. and 3 p.m. To make an appointment, call (703) 518–6546 or send an e-mail to *OGCMail@ncua.gov.*

FOR FURTHER INFORMATION CONTACT: Pamela Yu, Staff Attorney, Office of General Counsel, or Ross Kendall, Special Counsel to the General Counsel, at the address above or telephone (703) 518–6540.

SUPPLEMENTARY INFORMATION:

A. Background

The NCUA published a final rule in the **Federal Register** on May 26, 2011, at 76 FR 30510, containing a comprehensive framework outlining permissible and impermissible payments that FICUs can make in the nature of golden parachutes and indemnification for IAPs. The final rule requires a technical correction to conform the language concerning one permissible exception involving golden parachute restrictions to the intent of the rule, as described in the preamble to the May 26, 2011 rulemaking.

B. Correction

The intent of the final rule is that post-employment payments having reasonable business purposes should not be prohibited. Accordingly, the rule excludes from the definition of ''golden parachute payment'' certain qualified retirement plans such as those permitted under § 401 of the Internal Revenue Code (IRC). As discussed in the preamble to the final rule, in response to comments the Board intended to provide similar treatment to retirement plans that are permissible under § 457 of the IRC, which are frequently used by credit unions and other tax exempt organizations.

Plans qualifying as eligible deferred compensation plans under § 457(b) of the IRC exhibit characteristics that are similar to the more common § 401(k) deferred compensation plans that many employers make available to their employees. For example, the amount of income that may be deferred under such a plan is equivalent to that which may be deferred under § 401, which for 2011 is $16,500. As with § 401 plans, moreover, manipulation of the timing and amount of the payout are also closely circumscribed by law. For example, these plans may not typically provide for an in-service distribution prior to retirement. Accordingly, the Board intended for § 457(b) plans to be treated like § 401 plans and excluded from the definition of golden parachute payment.

Although the preamble to the final rule makes reference to plans under subsections (b) and (f) of § 457, it does not provide any substantive discussion concerning the differences between them. In fact, however, plans that are permissible under the latter subsection are significantly broader and are accorded much greater flexibility in terms of structure, vesting, etc. The intent of the rule has always been that § 457(f) plans must also meet the ''bona fide'' criteria outlined in § 750.1(c) to qualify as exceptions to the otherwise applicable golden parachute restrictions. Because of the limits inherent in § 457(b) and the constraints governing plans offered under that subsection, the Board intended to specify that only § 457(b) plans are excluded by definition from the term golden parachute payment.

This interim final rule amends § 750.1(e) to clarify that plans offered by FICUs under § 457(b) of the IRC are excluded from the definition of golden parachute payment. Plans offered under § 457(f), however, must meet the ''bona fide'' criteria outlined in § 750.1(c) to qualify as exceptions to the golden parachute payment definition.

C. Interim Final Rule

NCUA is issuing this rulemaking as an interim final rule effective as of June 27, 2011, which is the date the new part 750 will take effect. 76 FR 30510 (May 26, 2011). The Administrative Procedure Act (APA), 5 U.S.C. 553, generally requires that before a rulemaking can be finalized it must first be published as a notice of proposed rulemaking with the opportunity for public comment, unless the agency for good cause finds that notice and public comment are impracticable, unnecessary, or contrary to the public interest. In this regard, NCUA believes good cause exists for issuing this clarifying amendment as an interim final rule, in order to coordinate with the effective date of the new part 750 as well as eliminate as soon as possible any confusion resulting from preamble language that is inconsistent with, or makes ambiguous, the associated regulatory text. To that extent, NCUA believes issuing this rulemaking as an interim final rule is in the public interest. NCUA does not anticipate comments on this change and so is allowing only a 30-day comment period.

D. Regulatory Procedures

Regulatory Flexibility Act

The Regulatory Flexibility Act requires NCUA to prepare an analysis to describe any significant economic impact any proposed regulation may have on a substantial number of small entities (those under $10 million in assets). This interim final rule provides clarification regarding the applicability of one of the exceptions to otherwise applicable regulatory restrictions. Accordingly, it will not have a significant economic impact on a substantial number of small credit unions, and therefore, no regulatory flexibility analysis is required.

The Treasury and General Government Appropriations Act, 1999—Assessment of Federal Regulations and Policies on Families

NCUA has determined that this rule will not affect family well-being within the meaning of section 654 of the Treasury and General Government Appropriations Act, 1999, Public Law 105–277, 112 Stat. 2681 (1998).

Small Business Regulatory Enforcement Fairness Act

The Small Business Regulatory Enforcement Fairness Act of 1996 (Pub. L. 104–121) (SBREFA) provides generally for congressional review of agency rules. A reporting requirement is triggered in instances where NCUA issues a final rule as defined by Section 551 of the APA. 5 U.S.C. 551. NCUA does not believe this final rule is a ''major rule'' within the meaning of the relevant sections of SBREFA. NCUA has submitted the rule to the Office of Management and Budget for its determination in that regard.

Paperwork Reduction Act

The Paperwork Reduction Act of 1995 (PRA) applies to rulemakings in which an agency by rule creates a new paperwork burden on regulated entities or modifies an existing burden. 44 U.S.C. 3507(d); 5 CFR part 1320. For purposes of the PRA, a paperwork burden may take the form of either a reporting or a recordkeeping requirement, both referred to as information collections. These technical corrections do not impose any new paperwork burden.

List of Subjects in 12 CFR Part 750

Credit unions, Golden parachute payments, Indemnity payments.

By the National Credit Union Administration Board, this 17th day of June 2011.

Mary F. Rupp,

Secretary of the Board.

For the reasons stated in the preamble, the National Credit Union Administration amends 12 CFR part 750 as set forth below:

PART 750—GOLDEN PARACHUTE AND INDEMNIFICATION PAYMENTS

■ 1. The authority citation for part 750 continues to read as follows:

Authority: 12 U.S.C. 1786(t).

■ 2. Revise the definition of ''Golden Parachute Payment'' in § 750.1(e) to read as follows:

§ 750.1 Definitions.

* * * * *

(e) *Golden parachute payment*

* * *

(2) *Exceptions.* The term *golden parachute payment* does not include:

(i) Any payment made pursuant to a deferred compensation plan under section 457(b) of the Internal Revenue Code of 1986, 26 U.S.C. 457(b), or a pension or retirement plan that is qualified or is intended within a reasonable period of time to be qualified under section 401 of the Internal Revenue Code of 1986, 26 U.S.C. 401; or

(ii) * * *

[FR Doc. 2011–15729 Filed 6–23–11; 8:45 am]

BILLING CODE 7535–01–P

DEPARTMENT OF TRANSPORTATION

Federal Aviation Administration

14 CFR Part 39

[Docket No. FAA–2011–0468; Directorate Identifier 2011–CE–013–AD; Amendment 39–16697; AD 2011–09–51]

RIN 2120–AA64

Airworthiness Directives; PIAGGIO AERO INDUSTRIES S.p.A Model PIAGGIO P–180 Airplanes

AGENCY: Federal Aviation Administration (FAA), DOT.

ACTION: Final rule; correction.

SUMMARY: The FAA is correcting an airworthiness directive (AD) that published in the **Federal Register**. That AD applies to the products listed above. The AD number in the preamble on the first page of the AD is incorrect. This document corrects that error. In all other respects, the original document remains the same.

DATES: This final rule is effective June 24, 2011. The effective date for AD 2011–09–51 remains May 31, 2011.

ADDRESSES: You may examine the AD docket on the Internet at *http://www.regulations.gov;* or in person at the Docket Management Facility between 9 a.m. and 5 p.m., Monday through Friday, except Federal holidays. The AD docket contains this AD, the regulatory evaluation, any comments received, and other information. The address for the Docket Office (phone: 800–647–5527) is Document Management Facility, U.S. Department of Transportation, Docket Operations, M–30, West Building Ground Floor, Room W12–140, 1200 New Jersey Avenue, SE., Washington, DC 20590.

FOR FURTHER INFORMATION CONTACT: Mike Kiesov, Aerospace Engineer, Small Airplane Directorate, FAA, 901 Locust, Kansas City, MO 64106; phone: (816) 329–4144; fax: (816) 329–4090; e-mail: *mike.kiesov@faa.gov.*

SUPPLEMENTARY INFORMATION: Airworthiness Directive 2011–09–51, Amendment 39–16697 (76 FR 27872, May 13, 2011), currently requires an inspection and functional test of the valves and drain holes in the fuselage and requires sending a report of the results to Piaggio. If the valves and drain holes are found to not drain properly and where no additional drain holes have been drilled, then there is a requirement to drill additional drain holes.

As published, the AD number specified in the preamble section of the first page is incorrect.

No other part of the preamble or regulatory information has been changed; therefore, only the changed portion of the final rule is being published in the **Federal Register.**

The effective date of AD 2011–09–51 remains May 31, 2011.

Correction of Non-Regulatory Text

In the **Federal Register** of May 13, 2011, AD 2011–09–51, Amendment 39–16697, on page 27872, in the 3rd column, on line 3 of the agency identification number section of the preamble of AD 2011–09–51, the AD number is incorrectly referenced as AD 2011–10–16. This correction changes that AD number to AD 2011–09–51.

Issued in Kansas City, Missouri, on June 20, 2011.

Earl Lawrence,

Manager, Small Airplane Directorate, Aircraft Certification Service.

[FR Doc. 2011–15810 Filed 6–23–11; 8:45 am]

BILLING CODE 4910–13–P

DEPARTMENT OF TRANSPORTATION

Federal Aviation Administration

14 CFR Part 39

[Docket No. FAA–2011–0445; Directorate Identifier 2011–NE–14–AD; Amendment 39–16727; AD 2011–13–04]

RIN 2120–AA64

Airworthiness Directives; Rolls-Royce plc RB211—Trent 500 Series Turbofan Engines

AGENCY: Federal Aviation Administration (FAA), DOT.

ACTION: Final rule; request for comments.

SUMMARY: We are adopting a new airworthiness directive (AD) for the products listed above. This AD results from mandatory continuing airworthiness information (MCAI) issued by an aviation authority of another country to identify and correct an unsafe condition on an aviation product. The MCAI describes the unsafe condition as:

A Trent 500 engine has been found with thermal distress of the Intermediate Pressure (IP) Turbine Nozzle Guide Vanes. The resultant investigation found the root cause to be carbon blockage of the fuel spray nozzles. The source of the carbon has been identified to be the RH fuel manifold assembly. Analysis has verified that low fuel velocity and thermal input may cause formation of carbon in a specific region of the RH fuel manifold. As advanced thermal distress of IP Turbine components may potentially result in uncontained, high energy debris release, the formation of carbon in the RH fuel manifold constitutes a potentially unsafe condition. To address and correct this unsafe condition, Rolls Royce have developed a cleaning or replacement programme of the RH fuel manifold and an optional part replacement.

We are issuing this AD to prevent the release of uncontained high-energy debris in the event of IP turbine component failure, which could result in damage to the airplane.

DATES: This AD becomes effective July 11, 2011.

We must receive comments on this AD by July 25, 2011.

ADDRESSES: You may send comments by any of the following methods:

- *Federal eRulemaking Portal:* Go to *http://www.regulations.gov* and follow the instructions for sending your comments electronically.
- *Mail:* U.S. Department of Transportation, 1200 New Jersey Avenue, SE., West Building Ground Floor, Room W12–140, Washington, DC 20590–0001.
- *Hand Delivery:* Deliver to Mail address above between 9 a.m. and 5 p.m., Monday through Friday, except Federal holidays.
- *Fax:* (202) 493–2251.

Examining the AD Docket

You may examine the AD docket on the Internet at *http://www.regulations.gov;* or in person at the Docket Operations office between 9 a.m. and 5 p.m., Monday through Friday, except Federal holidays. The AD docket contains this AD, the regulatory evaluation, any comments received, and other information. The street address for the Docket Operations office (telephone (800) 647–5527) is the same as the Mail address provided in the **ADDRESSES** section. Comments will be available in the AD docket shortly after receipt.

FOR FURTHER INFORMATION CONTACT: Alan Strom, Aerospace Engineer, Engine Certification Office, FAA, Engine & Propeller Directorate, 12 New England Executive Park, Burlington, MA 01803; telephone 781–238–7143; fax 781–238–7199; e-mail: *alan.strom@faa.gov.*

SUPPLEMENTARY INFORMATION:

Discussion

The European Aviation Safety Agency (EASA), which is the Technical Agent for the Member States of the European Community, has issued EASA Airworthiness Directive 2011–0050, dated March 21, 2011 (referred to after this as ''the MCAI''), to correct an unsafe condition for the specified products. The MCAI states:

A Trent 500 engine has been found with thermal distress of the Intermediate Pressure (IP) Turbine Nozzle Guide Vanes. The resultant investigation found the root cause to be carbon blockage of the fuel spray nozzles. The source of the carbon has been identified to be the RH fuel manifold assembly. Analysis has verified that low fuel velocity and thermal input may cause formation of carbon in a specific region of the RH fuel manifold. As advanced thermal distress of IP Turbine components may potentially result in uncontained, high energy debris release, the formation of carbon in the RH fuel manifold constitutes a potentially unsafe condition. To address and correct this unsafe condition, Rolls Royce have developed a cleaning or replacement programme of the RH fuel manifold and an optional part replacement.

You may obtain further information by examining the MCAI in the AD docket.

Relevant Service Information

Rolls-Royce plc has issued Alert Service Bulletin No. RB.211–73–AG422, Revision 2, dated January 14, 2011. The actions described in this service information are intended to correct the unsafe condition identified in the MCAI.

FAA's Determination and Requirements of This AD

This product has been approved by the aviation authority of the United Kingdom, and is approved for operation in the United States. Pursuant to our bilateral agreement with the United Kingdom, they have notified us of the unsafe condition described in the MCAI and service information referenced above. We are issuing this AD because we evaluated all information provided by EASA and determined the unsafe condition exists and is likely to exist or develop on other products of the same type design.

FAA's Determination of the Effective Date

Since no domestic operators use this product, notice and opportunity for public comment before issuing this AD are unnecessary. Therefore, we are adopting this regulation immediately.

Comments Invited

This AD is a final rule that involves requirements affecting flight safety, and we did not precede it by notice and opportunity for public comment. We invite you to send any written relevant data, views, or arguments about this AD. Send your comments to an address listed under the **ADDRESSES** section. Include ''Docket No. FAA–2011–0445; Directorate Identifier 2011–NE–14–AD'' at the beginning of your comments. We specifically invite comments on the overall regulatory, economic, environmental, and energy aspects of this AD. We will consider all comments received by the closing date and may amend this AD because of those comments.

We will post all comments we receive, without change, to *http://www.regulations.gov,* including any personal information you provide. We will also post a report summarizing each substantive verbal contact with FAA personnel concerning this AD. Using the search function of the Web site, anyone can find and read the comments in any of our dockets, including, if provided, the name of the individual who sent the comment (or signed the comment on behalf of an association, business, labor union, *etc.*). You may review the DOT's complete Privacy Act Statement in the **Federal Register** published on April 11, 2000 (65 FR 19477–78).

Authority for This Rulemaking

Title 49 of the United States Code specifies the FAA's authority to issue rules on aviation safety. Subtitle I, section 106, describes the authority of the FAA Administrator. ''Subtitle VII: Aviation Programs,'' describes in more detail the scope of the Agency's authority.

We are issuing this rulemaking under the authority described in ''Subtitle VII, Part A, Subpart III, Section 44701: General requirements.'' Under that section, Congress charges the FAA with promoting safe flight of civil aircraft in air commerce by prescribing regulations for practices, methods, and procedures the Administrator finds necessary for safety in air commerce. This regulation is within the scope of that authority because it addresses an unsafe condition that is likely to exist or develop on products identified in this rulemaking action.

Regulatory Findings

We determined that this AD will not have federalism implications under Executive Order 13132. This AD will not have a substantial direct effect on the States, on the relationship between the national government and the States, or on the distribution of power and responsibilities among the various levels of government.

For the reasons discussed above, I certify this AD:

1. Is not a ''significant regulatory action'' under Executive Order 12866;

2. Is not a ''significant rule'' under the DOT Regulatory Policies and Procedures (44 FR 11034, February 26, 1979); and

3. Will not have a significant economic impact, positive or negative, on a substantial number of small entities under the criteria of the Regulatory Flexibility Act.

We prepared a regulatory evaluation of the estimated costs to comply with this AD and placed it in the AD docket.

List of Subjects in 14 CFR Part 39

Air transportation, Aircraft, Aviation safety, Incorporation by reference, Safety.

Adoption of the Amendment

Accordingly, under the authority delegated to me by the Administrator, the FAA amends 14 CFR part 39 as follows:

PART 39—AIRWORTHINESS DIRECTIVES

■ 1. The authority citation for part 39 continues to read as follows:

Authority: 49 U.S.C. 106(g), 40113, 44701.

§ 39.13 [Amended]

■ 2. The FAA amends § 39.13 by adding the following new AD:

2011–13–04 Rolls-Royce plc: Amendment 39–16727; Docket No. FAA–2011–0445; Directorate Identifier 2011–NE–14–AD.

Effective Date

(a) This airworthiness directive (AD) becomes effective July 11, 2011.

Affected ADs

(b) None.

Applicability

(c) This AD applies to Rolls-Royce plc RB211–Trent 553–61, RB211–Trent 553A2–61, RB211–Trent 556–61, RB211–Trent 556A2–61, RB211–Trent 556B–61, RB211–Trent 556B2–61, RB211–Trent 560–61, and RB211–Trent 560A2–61 turbofan engines, with right-hand (RH) fuel manifold assembly, part number FW18706, installed.

Reason

(d) This AD results from mandatory continuing airworthiness information (MCAI) issued by an aviation authority of another country to identify and correct an unsafe condition on an aviation product. The MCAI describes the unsafe condition as:

A Trent 500 engine has been found with thermal distress of the Intermediate Pressure (IP) Turbine Nozzle Guide Vanes. The resultant investigation found the root cause to be carbon blockage of the fuel spray nozzles. The source of the carbon has been identified to be the RH fuel manifold assembly. Analysis has verified that low fuel velocity and thermal input may cause formation of carbon in a specific region of the RH fuel manifold.

As advanced thermal distress of IP Turbine components may potentially result in uncontained, high energy debris release, the formation of carbon in the RH fuel manifold constitutes a potentially unsafe condition. To address and correct this unsafe condition, Rolls Royce have developed a cleaning or replacement programme of the RH fuel manifold and an optional part replacement.

We are issuing this AD to prevent the release of uncontained high-energy debris in the event of IP turbine component failure, which could result in damage to the airplane.

Actions and Compliance

(e) Unless already done, do the following actions:

Initial Cleaning and Inspection, or Replacement

(1) For engines that on the effective date of this AD, have not been repaired using Engine Management Program, Issue 7, dated May 7, 2010 or later version; and

(2) That have not incorporated Rolls-Royce Repeater Technical Variance TV97291, dated July 2009, or later version; and

(3) That have not had the RH fuel manifold assembly cleaned using Overhaul Process Manual TSD594–J, Task 70–00–00–100–121, as instructed in Component Maintenance Manual, Tubes, Hoses, and Ducts, dated October 2009, or later version; and

(4) That have not had the RH manifold assembly replaced with a new RH manifold assembly; and

(5) That have not incorporated Rolls-Royce plc Alert Service Bulletin No. RB.211–73–AG327, Revision 1, dated May 4, 2010, or later version, then:

(i) Initially clean and inspect the RH fuel manifold assembly or replace the RH fuel manifold assembly with a serviceable RH fuel manifold assembly.

(ii) Guidance on cleaning, inspecting, or replacing of the RH manifold assembly, can be found in Rolls-Royce plc Alert Service Bulletin No. RB.211–73–AG422, Revision 2, dated January 14, 2011.

(iii) Perform the cleaning, inspection, or replacement at the following times:

(A) For engines with 3,200 cycles-since-new (CSN) or more, clean and inspect within 200 cycles after the effective date of this AD.

(B) For engines with between 3,000 CSN and 3,199 CSN, clean and inspect no later than 3,400 CSN.

(C) For engines with between 2,600 CSN and 2,999 CSN, clean and inspect within 400 cycles after the effective date of this AD.

(D) For engines with between 2,400 CSN and 2,599 CSN, clean and inspect no later than 3,000 CSN.

(E) For engines with between 1,300 CSN and 2,399 CSN, clean and inspect within 600 cycles after the effective date of this AD.

(F) For engines with fewer than 1,300 CSN, clean and inspect no later than 1,900 CSN.

(6) For engines that on the effective date of this AD, have been repaired using Engine Management Program, Issue 7, dated May 7, 2010 or later version; or

(7) That have incorporated Rolls-Royce Repeater Technical Variance TV97291, dated July 2009, or later version; or

(8) That have had the RH fuel manifold assembly cleaned using Overhaul Process Manual TSD594–J, Task 70–00–00–100–121, as instructed in Component Maintenance Manual, Tubes, Hoses, and Ducts, dated October 2009, or later version; or

(9) That have had the RH manifold assembly replaced with a new RH manifold assembly; or

(10) That have incorporated Rolls-Royce plc Alert Service Bulletin No. RB.211–73–AG327, Revision 1, dated May 4, 2010, or later version, then:

(i) Initially clean and inspect the RH fuel manifold assembly or replace the RH fuel manifold assembly with a serviceable RH fuel manifold assembly, within 1,300 cycles since the engine most recently met any of the requirements of paragraphs (e)(6) through (e)(10) of this AD.

(ii) Guidance on cleaning, inspecting, or replacing of the RH manifold assembly, can be found in Rolls-Royce plc Alert Service Bulletin No. RB.211–73–AG422, Revision 2, dated January 14, 2011.

Repetitive Cleaning and Inspection, or Replacement

(11) Thereafter, repetitively clean and inspect the RH fuel manifold assembly or replace the RH fuel manifold assembly with a serviceable RH fuel manifold assembly, within 1,300 cycles since performing the last cleaning and inspection or replacement.

Optional Terminating Action

(12) As optional terminating action to the repetitive actions in this AD, remove RH fuel manifold assembly, part number FW18706, and install a redesigned RH fuel manifold assembly. Guidance on installing the redesigned RH fuel manifold assembly can be found in Rolls-Royce plc Service Bulletin No. RB.211–73–G547, dated December 7, 2010.

FAA AD Differences

(f) None.

Alternative Methods of Compliance (AMOCs)

(g) The Manager, Engine Certification Office, FAA, has the authority to approve AMOCs for this AD, if requested using the procedures found in 14 CFR 39.19.

Related Information

(h) Refer to MCAI European Aviation Safety Agency Airworthiness Directive 2011–0050, dated March 21, 2011, Rolls-Royce plc Alert Service Bulletin No. RB.211–73–AG422, Revision 2, dated January 14, 2011, and Rolls-Royce plc Service Bulletin No. RB.211–73–G547, dated December 7, 2010, for related information. Contact Rolls-Royce plc, Corporate Communications, P.O. Box 31, Derby, England, DE248BJ, telephone: 011–44–1332–242424; fax: 011–44–1332–245418; or e-mail via: *http://www.rolls-royce.com/contact/civil_team.jsp,* for a copy of this service information.

(i) Contact Alan Strom, Aerospace Engineer, Engine Certification Office, FAA, Engine & Propeller Directorate, 12 New England Executive Park, Burlington, MA 01803; telephone 781–238–7143; fax 781–238–7199; e-mail: *alan.strom@faa.gov,* for more information about this AD.

Material Incorporated by Reference

(j) None.

Issued in Burlington, Massachusetts, on June 14, 2011.

Peter A. White,

Acting Manager, Engine and Propeller Directorate, Aircraft Certification Service.

[FR Doc. 2011–15677 Filed 6–23–11; 8:45 am]

BILLING CODE 4910–13–P

DEPARTMENT OF TRANSPORTATION

Federal Aviation Administration

14 CFR Part 77

[Docket No: FAA 2010–1326]

Marking Meteorological Evaluation Towers

AGENCY: Federal Aviation Administration (FAA), DOT.

ACTION: Policy statement.

SUMMARY: This action announces the FAA's recommended guidance for the voluntary marking of Meteorological Evaluation Towers (METs) erected in remote and rural areas that are less than 200 feet above ground level (AGL). This guidance will enhance the conspicuity of the towers for low level agricultural operations in the vicinity of these towers.

FOR FURTHER INFORMATION CONTACT: Sheri Edgett Baron, Obstruction Evaluation Group, Air Traffic Organization, AJV–15, Federal Aviation Administration, 800 Independence Avenue, SW., Washington, DC 20591; telephone: (202) 267–8783; e-mail: *sheri.edgett-baron@faa.gov.*

SUPPLEMENTARY INFORMATION:

14 CFR Part 77

Title 49 of the United States Code (U.S.C.), section 40103(a)(1), provides that the ''United States Government has exclusive sovereignty of airspace of the United States.'' Paragraph (b) of this section directs the FAA to ''develop plans and policy for the use of the navigable airspace and assign by regulation or order the use of the airspace necessary to ensure the safety of aircraft and the efficient use of the airspace.''

In recognition of the threat tall structures can pose to aviation safety, 49 U.S.C. 44718 directed the FAA to promulgate regulations requiring notice of proposed structures or alterations of existing structures when the notice will promote safety in air commerce and the efficient use and preservation of the navigable airspace and of airport traffic capacity at public-use airports. *See* 14 CFR part 77. The agency was further directed to study such structures and determine the extent of any adverse impacts on the safe and efficient use of the airspace, facilities or equipment.

Consistent with the above statutory and regulatory framework, the FAA has adopted policy to establish the standards for which the FAA identifies ''obstructions'' and ''hazards'' in the navigable airspace in furtherance of its

responsibilities to manage the navigable airspace safely and efficiently. *See* 14 CFR part 77 and FAA Order 7400.2, Procedures for Handling Airspace Matters.

Part 77 specifies when notice must be filed with the FAA for the construction of a structure or alteration of (an existing) structure. In filing this notice, the proponent provides the required information and submits its marking and lighting plan for that proposal, if appropriate. Sponsors are encouraged to review the guidance in Advisory Circular No. 70/7460–1, Obstruction Marking and Lighting in devising the marking and lighting plan for the proposed structure. In conducting the aeronautical study, the FAA considers the proposed structure, including the marking and lighting plan, and determines the impact on air navigation. If the FAA issues a Determination of No Hazard to Air Navigation, the determination may be conditioned on the structure being marked and lighted in accordance with the determination. Unless notice is required under a separate paragraph of § 77.9, the FAA does not study structures under 200 feet AGL at its site.

I. Background

The FAA has been approached by operators, associations representing agricultural operators, and state governments concerning the visibility of METs in remote and rural areas that also have low-level flight operations. METs are used by wind energy companies to determine feasible sites for wind turbines. Some of these towers are less than 200 feet AGL, usually at 198 feet or less. The structures are portable, erected in a matter of hours, installed with guyed wires and constructed from a galvanized material often making them difficult to see in certain atmospheric conditions. The METs that fall under the 200 foot AGL threshold, specified in § 77.9, are not subject to the notice requirements and do not trigger any aeronautical study by the FAA.

On January 5, 2011, the FAA published a document seeking comments on proposed guidance for the voluntary marking of METs less than 200 feet AGL (76 FR 1326). The FAA agrees that marking these structures would enhance the conspicuity of these METs, particularly for low-level agricultural operations.

The document set forth three recommendations for comment. First, the FAA recommended that the METs be painted in accordance with the criteria contained in Chapter 3, paragraphs 30–33 of AC No. 70/7460–1. In particular, paragraph 33 discusses the paint pattern used to mark structures based on size and shape. Section (d) of that paragraph specifically refers to communication towers and catenary support structures, poles, smokestacks and skeletal framework of storage tanks and similar structures. The METs addressed in this document are similar to the structures identified in this paragraph. Therefore, the FAA proposed the guidance recommended for these structures, which is alternating bands of aviation orange and white.

Secondly, the FAA recommended spherical and/or flag markers be used in addition to the above paint pattern when additional conspicuity is necessary for aviation safety. Paragraph 34 provides recommended guidance for the use of spherical and flag markers.

Lastly, the FAA proposed high visibility sleeves and/or flags on the outer guy wires of these METs. While AC No. 70/7460–1 does not contain this type of marking, the FAA specifically sought comments as whether this type of marking would be feasible and appropriate.

II. Summary of Comments and FAA Response

The comment period closed on February 4, 2011 and the FAA received approximately 460 comments from individuals, aviation associations, industry users, aviation businesses, emergency medical services, state governments and state departments of transportation. Many comments received were in response to the January 10, 2011 fatal accident involving a Rockwell International S–2R aircraft that collided with a MET during an aerial application in Oakley, California. Most commenters supported a goal of improving the safety of certain aviation operations in the vicinity of METs that are less than 200 feet in height. Some commenters supported various forms of marking the METs not proposed in the document, and others supported marking and lighting METs. Only 3 commenters opposed the proposed guidance.

The comments covered the following general areas of the proposal: marking and lighting METS, the advantages and disadvantages of affixing sleeves and spherical marker balls, establishing a database of METs, and making the guidance for marking mandatory.

The American Wind Energy Association (AWEA) and California Wind Energy Association favored enhancing pilot safety. AWEA supported painting the METs as proposed, but commented that painting the top ⅓ of the tower would be sufficient. The National Agricultural Aviation Association (NAAA) commented that the marking provisions should apply to any tower over 50 feet AGL. NAAA further contends that paint must be applied to the entire vertical length of the tower in order to be effective. Transport Canada, which recently issued an Advisory Circular [1] for marking of METs, recommend painting the entire support mast.

The FAA agrees that painting the entire structure will provide the best visibility for pilots. As aerial applicators fly close to the vegetation and well below 200 feet AGL, the MET should be visible against the terrain as well as the sky. Therefore, the most effective painting scheme would entail painting the entire structure with alternating bands of aviation orange and white paint, as described in AC No. 70/7460–1, paragraphs 30–33. These provisions also recommend that the paint should be replaced when faded or otherwise deteriorated.

The FAA received varying comments on the usage and length of sleeves on METs. Several commenters, including AWEA and Iberdrola, stated that there is a practical limit as to how much weight the guy wires can sustain and a limited percentage of wires can bear the additional weight of sheathing. AWEA also stated that sleeves could add significant stress, particularly in icing situations, and undermine the structural integrity of the tower and lead to failure.

Commenters indicated that the length of the sleeve should be determined on a case-by-case basis, and result in a sheath that is sufficient to rise above tall crops or other land cover but still remain visible to pilots. The Helicopter Association International recommended at least 16 feet of high visibility sleeves on guy wires at the anchor point to extend above any surrounding crop. Other commenters recommended sheathing in a range of 6–10 feet.

The FAA received similar comments from Iberdrola, AWEA, NAAA and other agricultural associations on the use of spherical marker balls. These commenters stated that marker balls can attract significant icing, which increase loads on the tower and can lead to tower failure, as well as interfere with instrumentation and affect accuracy of MET readings. Various agricultural associations and others supported the use of spherical marker balls painted aviation orange. EcoEnergy uses 4 high visibility cable balls on the outer guy wires. Iowa Agricultural Aviation Association recommended 8 total

[1] Transport Canada Advisory Circular No. 600–001, Marking of Meteorological Towers (Mar. 3, 2011).

marker balls. Iberdrola uses 4 marker balls installed just above ground-based sheathing to enhance visibility of the furthest extent of guy wires and a second set of 4 marker balls installed approximately 45 meters AGL to enhance visibility of the painted tower segment that delineates the tallest extent of the tower. Iberdola strongly discouraged consideration of additional maker balls (more than 8) on METs as structural integrity limits are encroached upon with further loading.

Additionally, a few comments supported the use of marker flags in conjunction with spherical marker balls. The commenters also noted that flags may be useful as a visual aid, but are subject to rapid deterioration from weather conditions such as wind, snow, and ice.

The FAA concludes that sleeves and spherical marker balls will enhance the conspicuity of METs particularly for low flying agricultural and other aviation operations. The FAA recommends one high visibility sleeve on each guy wire anchor point that will reach a height well above the crop or vegetation canopy, and another sleeve installed on each of the outer guy wires. The FAA recognizes that certain weather conditions may affect the placement and use of high visibility sleeves on guy wires, and that the length should be determined on a case-by-case basis.

Spherical markers may have different placement standards, depending on the company that manufactures them. Varying placement standards and other factors such as weather play a role in the placement of spherical markers and flexibility is needed when determining their position on the METs. As a general recommendation, that FAA recommends a total of 8 high visibility spherical marker (or cable) balls of aviation orange color attached to the guy wires; four marker balls should be attached to guy wires at the top of the tower no further than 15 feet from the top wire connection to the tower, and 4 marker balls at or below the mid point of the structure on the outer guy wires. As stated previously, the FAA recognizes that the varying factors identified above may result in the placement or number of marker balls used and should be addressed on a case-by-case basis. The use of sleeves should not impact the placement of spherical marker balls.

Existing guidance in AC 70/7460, paragraph 34(b) states that flags are used to mark certain structures or objects when it is technically impractical to use spherical markers or painting. The FAA recommends spherical markers and paint, however, the FAA did not receive sufficient data on the use of flags on the guy wires that support METs to provide recommendations on their use for these towers.

NAAA, HAI, and others submitted various recommendations for lighting METs. The comments recommended varied uses of red lights and white strobe lights. Some commenters also stated that a recommendation for lights would require a Notice to Airmen (NOTAM) to be issued when the lights were not operational.[2]

Lighting studies indicate that red lights are difficult to see during the day, and that the most acceptable lighting configuration would be the use of a high intensity white strobe. The FAA acknowledges that the addition of lights may make METs more visible to agricultural and other low flying operations. The FAA concludes, however, that it would not be practical to recommend lights for the METs addressed in this document. The remoteness of many MET locations does not allow for pre-existing power sources, and strobe lights require more power than red lights. While solar lights may be a possible option, the FAA has not studied solar lighting and therefore, cannot provide recommendations for flight visibility.

Additionally, when the FAA conducts an aeronautical study, it reviews many factors in determining whether lighting is necessary. These factors include height, location, proximity to an airport, flight activity in the area, and complexity of terrain. Without a similar evaluation process, the FAA cannot recommend lighting for METs. It is important to note that the FAA does not recommending lighting in every aeronautical study.

The State of Minnesota commented that it is important to collect and share information METs siting in a timely manner, and that recommendations to mark and light METs should not hinder any growth aspirations of the wind industry. NAAA proposed that the FAA establish a database that catalogues all tower locations, similar to the initiative by the State of Wyoming.

It is not feasible for the FAA to maintain a national database for structures that are less than 200 feet AGL and otherwise not subject to the notice requirement in part 77. The FAA does not object to a state or local jurisdiction maintaining or providing a source of information that would inform pilots as to the location or planned location of these towers or for some other zoning, planning or public welfare purpose.

Many commenters responded that marking and lighting of METs should be mandatory. The FAA also received comments from the Experimental Aircraft Association, the National Association of State Aviation Officials, and others recommending changes to part 77 so that the FAA may study different structures at heights constructed less than 200 feet. NAAA also commented that upon adoption of revised standards, any towers erected before the adoption date shall be marked within six months after the effective date.

The purpose of this proposal was to address a limited population of METs that are not studied under part 77, but are difficult to see by certain low level aircraft operations. The guidance is recommended to landowners and developers siting these towers in remote, rural agricultural areas. The guidance recommended here is not necessary for METs that are erected in urban areas and far removed from areas where rural agricultural spraying operations are conducted. Landowners and developers must exercise discretion in determining if the METs will be erected in this type area where these operations are conducted and whether the marking and painting would enhance the visibility of these structures to low-level flight operations.

The FAA received comments pertaining to environmental impact issues and vegetation management. The Marin Audubon Society supporting the inclusion of guidance for measures to reduce the risk of collision for aircraft and birds. Other commenters claimed that steady red lights attract and confuse birds and that sleeves and skeletal framework of METs should be designed to make them visible for birds.

Three commenters opposed the proposal. One commenter was concerned that the proposal would be expanded to include amateur radio antenna supports. Another commenter was concerned with light pollution and applicability regardless of terrain and other factors. The remaining commenter inaccurately referred to this notice of policy as a notice of proposed rulemaking to amend the regulations in part 77. This commenter also argued that some developers may follow the guidance and others may not, which may introduce potential for pilots to presume that all METs will be marked and could result in failure to identify and avoid unmarked towers. The commenter contends that developers that choose to voluntarily mark and

[2] The FAA notes that a NOTAM is issued for light outages only for structures subject to an FAA determination that specifies lighting.

light their METs would incur additional costs and time delays and this affects their ability to compete with others in the market. As stated previously, the FAA is not amending the regulations to require notice for structures less than 200 feet AGL in non-airport environments. The FAA is providing this information to enhance the visibility of structures that otherwise may be difficult to see due to the terrain and the nature of specific operations conducted around these METs. While this guidance is not mandatory, the FAA anticipates that in the interest of aviation safety, developers and landowners will consider this guidance for METs erected in the environments described in this document.

III. Policy

The FAA recommends voluntary marking of METs less than 200 feet AGL in accordance with marking guidance contained in this document and Advisory Circular 70–7460–l, Obstruction Marking and Lighting. The FAA notes that historically this guidance has not been applied to the voluntary marking of METs less than 200 feet AGL. However, the FAA recognizes the need to address safety impacts to low-level flight operations due to the construction of METs in remote and rural areas, especially as agricultural spraying season approaches. Due to the growing concerns expressed by operators, associations representing agricultural operators, and state and local governments throughout the agricultural industry, the FAA believes that voluntary marking of METs less than 200 AGL in remote and rural areas enhance the visibility of these structures to low level agricultural operations in the vicinity of these towers.

The FAA recommends that landowners and developers use guidance contained in Advisory Circular 70/7460–1, Obstruction marking and Lighting for the voluntary marking of METs less than 200 feet AGL. METs should be painted in accordance to criteria contained in Chapter 3, paragraphs 30–33 of AC No. 70/7460–1, specifically, with alternate bands of aviation orange and white paint. In addition, paragraph 34 states that all markings should be replaced when faded or otherwise deteriorated. The FAA recommends that high visibility sleeves be installed on the outer guy wires of METs as described in this document. The FAA intends, at a future date, to amend the advisory circular to include guidance on sleeves. Additionally, the FAA recommends high visibility spherical marker (or cable) balls of aviation orange color are attached to the guy wires. Spherical markers should be installed and displayed in accordance to guidance contained in this document and additional standards contained in Chapter 3, paragraph 34 of AC No. 70/70460–1. The FAA, however, recognizes various weather conditions and manufacturing placement standards may affect the placement and use of high visibility sleeves and/or spherical markers. Thus, flexibility is needed when determining sleeve length and marker placement on METs.

Issued in Washington, DC, on June 20, 2011.

Dennis E. Roberts,

Director, ATO Airspace Services, AJV–1.

[FR Doc. 2011–15746 Filed 6–23–11; 8:45 am]

BILLING CODE 4910–13–P

DEPARTMENT OF COMMERCE

Bureau of Industry and Security

15 CFR Parts 734, 740, 743 and 774

[Docket No. 110210131–1317–01]

RIN 0694–AF15

Export Controls for High Performance Computers: Wassenaar Arrangement Agreement Implementation for ECCN 4A003 and Revisions to License Exception APP

AGENCY: Bureau of Industry and Security, Commerce.

ACTION: Final rule.

SUMMARY: This final rule revises the Export Administration Regulations (EAR) to implement changes made to the Wassenaar Arrangement's List of Dual Use Goods and Technologies (Wassenaar List) maintained and agreed to by governments participating in the Wassenaar Arrangement on Export Controls for Conventional Arms and Dual Use Goods and Technologies (Wassenaar Arrangement, or WA) at the December 2009 WA Plenary Meeting (the Plenary) that relate to Export Control Classification Number (ECCN) 4A003. These changes agreed to at the Plenary pertain to raising the Adjusted Peak Performance (APP) for digital computers in ECCN 4A003. In accordance with the National Defense Authorization Act (NDAA) for FY 1998, the President's report for High Performance Computers was sent to Congress on February 7, 2011, to identify and set forth a justification for the new APP. This rule also makes corresponding revisions to License Exception APP, the de minimis rule, and post shipment verification reporting requirements in the EAR.

Additionally, this rule moves Albania and Croatia from Computer Tier 3 to Computer Tier 1 in the section of the EAR dedicated to export control requirements for high performance computers. The Administration believes Albania and Croatia are eligible to be treated as Computer Tier 1 countries because their governments have made the necessary reforms to allow the countries to join the North Atlantic Treaty Organization, and have adopted accepted global standards in export controls.

DATES: *Effective Dates:* This rule is effective on June 24, 2011.

FOR FURTHER INFORMATION CONTACT: For general questions contact Sharron Cook, Office of Exporter Services, Bureau of Industry and Security, U.S. Department of Commerce at 202–482 2440 or by *e-mail: sharron.cook@bis.doc.gov*.

For technical questions contact: Joseph Young at 202–482–4197 or by e-mail at *joseph.young@bis.doc.gov.*

SUPPLEMENTARY INFORMATION:

Background

In July 1996, the United States and thirty-three other countries gave final approval to the establishment of a new multilateral export control arrangement called the Wassenaar Arrangement on Export Controls for Conventional Arms and Dual Use Goods and Technologies (Wassenaar Arrangement or WA). The Wassenaar Arrangement contributes to regional and international security and stability by promoting transparency and greater responsibility in transfers of conventional arms and dual use goods and technologies, thus preventing destabilizing accumulations of such items. Participating states committed to exchange information on exports of dual use goods and technologies to non-participating states for the purposes of enhancing transparency and assisting in developing a common understanding of the risks associated with the transfers of these items. For more information on the Wassenaar Arrangement go to *http://www.wassenaar.org/.*

Many computers are exported and reexported using License Exception Adjusted Peak Performance (APP). The primary eligibility criteria considered for this license exception are destination country and the processing speed. In the past, the processing speed was measured using a formula that would result in the Composite Theoretical Performance (CTP) of a computer. Presently, the speed of computers is calculated using a formula that results in the Adjusted Peak Performance

(APP). The countries eligible for export or reexport under License Exception APP are divided into two groups or ''Tiers'', (Tier 1 and Tier 3). Countries listed in Tier 1 are ally countries or countries that do not pose a national security, nuclear or missile threat to the United States. Tier 3 Countries are all other countries with the exception of the terrorist supporting countries listed in Country Group E:1 of Supplement No. 1 to part 740.

The National Defense Authorization Act (NDAA) Congressional Notification Requirement, Subsections 1211(d) and (e) of the National Defense Authorization Act (NDAA) for FY 1998 (Pub. L. 105–85, November 18, 1997, 111 Stat. 1932), provides that a new composite theoretical performance level for purposes of licensing exports of digital computers to Tier 3 countries may not take effect until sixty days after the President submits a report to Congress setting forth the new level and the justification for the new level. The President sent a report to Congress on February 7, 2011 that identifies and provides justification for a new 1.5 Weighted TeraFLOPS (WT) control level using the Adjusted Peak Performance (APP) formula.

Revisions to the Commerce Control List

This rule revises Export Control Classification Number (ECCN) 4A003 on the Commerce Control List (CCL) to implement the changes to the Wassenaar List of Dual Use Goods and Technologies agreed to at the December 2009 WA Plenary meeting. These changes are described in more detail below.

ECCN 4A003 is amended by:

—Revising the APP from 0.75 to 1.5 WT in the AT control paragraph of the License Requirements section to make it consistent with the revision in 4A003.b.

—Revising the APP from 0.75 to 1.5 WT (in two places) in **Note 1** of the License Requirements section, to make it consistent with a revision in 4A003.b.

—Revising the APP from 0.75 to 1.5 WT in 4A003.b to maintain control of leading edge computers, while decontrolling older computers.

Section 740.7 Computers (APP)

The WA members agreed at the 2009 Plenary to raise the ''License Exception Adjusted Peak Performance'' (APP) parameter in ECCNs 4D001 (0.25 WT), and 4E001 (0.25 WT), because of the advancement of computer technology. In License Exception APP, with regard to deemed exports of ''development'' and ''production'' technology controlled by ECCN 4E001 and source code controlled by ECCN 4D001, BIS is raising the eligibility parameter (APP) from 0.5 WT to 1.5 WT for foreign nationals of Computer Tier 1 countries (with the exception of the countries listed in Section 740.7(c)(3)(i) that have unlimited APP for ''development'' and ''production'' technology and source code) and from 0.1 WT to 0.5 WT for foreign nationals of Computer Tier 3 countries, because of the advancement of high performance computer technology.

Albania and Croatia

This rule removes Albania and Croatia from Computer Tier 3 and places these countries in Computer Tier 1 in Section 740.7 License Exception APP. The requirements in the 1998 National Defense Authorization Act (NDAA) provides that the removal of a country from Tier 3 may take effect 120 days after Congress receives a report justifying such a removal. The President sent a report to Congress on February 7, 2011, therefore the 120 days have passed. Albania and Croatia have made significant progress in conforming to international nonproliferation norms and export control standards. Croatia is a member of the Australia Group, the Nuclear Suppliers Group, and the Wassenaar Arrangement. Albania has declared its adherence to the international export control regimes and is working on becoming a member of the regimes. Albania and Croatia are parties to the Nuclear Non-Proliferation Treaty, the Chemical Weapons Convention, and the Biological Weapons Convention. In addition, Albania and Croatia adhere to the Hague Code of Conduct and are now North Atlantic Treaty Organization (NATO) allies. This revision will result in fewer license applications, because Albania and Croatia will now be eligible for License Exception APP. In addition, the EAR will no longer require NDAA-based recordkeeping and post shipment verification reporting of exports of high performance computers to Albania and Croatia (see Section 743.2 of the EAR).

Section 734.4 ''De minimis U.S. Content''

Foreign-made computers with an APP of 0.75 WT located in a foreign country are not eligible for the application of the *de minimis* rules when they contain U.S.-origin controlled semiconductors (other than memory circuits) classified under ECCN 3A001 and are destined to a country in Computer Tier 3 of Section 740.7 of the EAR. This rule increases the APP parameter from 0.75 WT to 1.5 WT in harmonization with the revision made to ECCN 4A003.

Section 743.2 ''High Performance Computers: Post Shipment Verification Reporting''

This section outlines special post-shipment reporting requirements for the export of certain computers to destinations in Computer Tier 3 of License Exception APP (Section 740.7 of the EAR). The reporting requirement applies to high performance computer exports to destinations in Computer Tier 3, as well as exports of commodities used to enhance computers previously exported or reexported to Computer Tier 3 destinations, where the APP is greater than 0.75 WT. This rule increases that APP level from 0.75 WT to 1.5 WT in accordance with the WA agreement to increase the APP level in ECCN 4A003.

Export Administration Act

Since August 21, 2001, the Export Administration Act of 1979, as amended, has been in lapse. However, the President has continued the EAR in effect under the International Emergency Economic Powers Act (50 U.S.C. 1701–1707) through Executive Order 13222 of August 17, 2001 (3 CFR, 2001 Comp. 783 (2002)), which has been extended by successive Presidential Notices, the most recent being that of August 12, 2010, 75 FR 50681 (August 16, 2010).

Rulemaking Requirements

1. This final rule has been determined to be not significant for purposes of Executive Order 12866.

2. Notwithstanding any other provision of law, no person is required to respond to, nor shall any person be subject to a penalty for failure to comply with a collection of information subject to the requirements of the Paperwork Reduction Act of 1995 (44 U.S.C. 3501 *et seq.*) (PRA), unless that collection of information displays a currently valid Office of Management and Budget (OMB) Control Number. This rule involves two collections of information subject to the PRA. One of the collections has been approved by OMB under control number 0694–0088, ''Multi Purpose Application,'' and carries a burden hour estimate of 43.8 minutes for a manual or electronic submission. The other of the collections has been approved by OMB under control number 0694–0137, '''Licensing Exceptions and Exclusions,'' and carries a burden hour estimate of 21 minutes for a manual or electronic submission. Send comments regarding these burden estimates or any other aspect of these collections of information, including

suggestions for reducing the burden, to OMB Desk Officer, New Executive Office Building, Washington, DC 20503; and to Jasmeet Seehra, OMB Desk Officer, by e-mail at *Jasmeet_K._Seehra@omb.eop.gov* or by fax to (202) 395–7285; and to the Office of Administration, Bureau of Industry and Security, Department of Commerce, 14th and Pennsylvania Avenue, NW., Room 6622, Washington, DC 20230.

3. This rule does not contain policies with Federalism implications as that term is defined under Executive Order 13132.

4. The provisions of the Administrative Procedure Act (5 U.S.C. 553) requiring notice of proposed rulemaking, the opportunity for public participation, and a delay in effective date, are inapplicable because this regulation involves a military and foreign affairs function of the United States (5 U.S.C. 553(a)(1)). Immediate implementation of these amendments fulfills the United States' international obligation to the Wassenaar Arrangement on Export Controls for Conventional Arms and Dual Use Goods and Technologies. The Wassenaar Arrangement contributes to international security and regional stability by promoting greater responsibility in transfers of conventional arms and dual use goods and technologies, thus preventing destabilizing accumulations of such items. The Wassenaar Arrangement consists of 44 member countries that act on a consensus basis and the changes set forth in this rule implement agreements reached at the December 2009 plenary session of the WA. Because the United States is a significant exporter of the items in this rule, implementation of this provision is necessary for the WA to achieve its purpose. Delaying implementation will create a disruption in the movement of affected items globally because of disharmony between export control measures implemented by WA members, resulting in tension between member countries. Export controls work best when all countries implement the same export controls in a timely manner. If this rulemaking was delayed to allow for notice and comment, it would prevent the United States from fulfilling its commitment to the WA in a timely manner and would injure the credibility of the United States in this and other multilateral regimes.

Further, no other law requires that a notice of proposed rulemaking and an opportunity for public comment be given for this final rule. Because a notice of proposed rulemaking and an opportunity for public comment are not required to be given for this rule under the Administrative Procedure Act or by any other law, the analytical requirements of the Regulatory Flexibility Act (5 U.S.C. 601 *et seq.*) are not applicable. Therefore, this regulation is issued in final form. Although there is no formal comment period, public comments on this regulation are welcome on a continuing basis. Comments should be submitted to Sharron Cook, Office of Exporter Services, Bureau of Industry and Security, Department of Commerce, 14th and Pennsylvania Ave., NW., Room 2099, Washington, DC 20230.

List of Subjects

15 CFR Part 734

Administrative practice and procedure, Exports, Inventions and patents, Research science and technology.

15 CFR Part 740

Administrative practice and procedure, Exports, Reporting and recordkeeping requirements.

15 CFR Part 743

Administrative practice and procedure, Reporting and recordkeeping requirements.

15 CFR Part 774

Exports, Reporting and recordkeeping requirements.

Accordingly, Parts 734, 740, 743 and 774 of the Export Administration Regulations (15 CFR Parts 730 through 774) are amended as follows:

PART 734—[AMENDED]

■ 1. The authority citation for Part 734 continues to read as follows:

Authority: 50 U.S.C. app. 2401 *et seq.;* 50 U.S.C. 1701 *et seq.;* E.O. 12938, 59 FR 59099, 3 CFR, 1994 Comp., p. 950; E.O. 13020, 61 FR 54079, 3 CFR, 1996 Comp., p. 219; E.O. 13026, 61 FR 58767, 3 CFR, 1996 Comp., p. 228; E.O. 13222, 66 FR 44025, 3 CFR, 2001 Comp., p. 783; Notice of August 12, 2010, 75 FR 50681 (August 16, 2010); Notice of November 4, 2010, 75 FR 68673 (November 8, 2010).

§ 734.4 [Amended]

■ 2. Section 734.4 is amended by removing the phrase ''0.75 Weighted TeraFLOPS (WT)'' and adding in its place ''1.5 Weighted TeraFLOPS (WT)'' in paragraph (a)(1).

PART 740—[AMENDED]

■ 3. The authority citation for Part 740 continues to read as follows:

Authority: 50 U.S.C. app. 2401 *et seq.;* 50 U.S.C. 1701 *et seq.;* 22 U.S.C. 7201 *et seq.;* E.O. 13026, 61 FR 58767, 3 CFR, 1996 Comp., p. 228; E.O. 13222, 66 FR 44025, 3 CFR, 2001 Comp., p. 783; Notice of August 12, 2010, 75 FR 50681 (August 16, 2010).

§ 740.7 [Amended]

■ 4. Section 740.7 is amended by:

■ a. Removing Albania and Croatia from the list of countries in paragraph (d)(1) and adding them in alphabetical order to paragraph (c)(1);

■ b. Removing the number ''0.5'' and adding in its place ''1.5'' in paragraph (c)(3)(ii); and

■ c. Removing the number ''0.1'' and adding in its place ''0.5'' in paragraph (d)(3)(i).

PART 743—[AMENDED]

■ 5. The authority citation for Part 743 continues to read as follows:

Authority: 50 U.S.C. app. 2401 *et seq.;* 50 U.S.C. 1701 *et seq.;* E.O. 13222, 66 FR 44025, 3 CFR, 2001 Comp., p. 783; Notice of August 12, 2010, 75 FR 50681 (August 16, 2010).

§ 743.2 [Amended]

■ 6. Section 743.2 is amended by removing the phrase ''0.75 Weighted TeraFLOPS (WT).'' and adding in its place ''1.5 Weighted TeraFLOPS (WT).'' in paragraph (b).

PART 774—[AMENDED]

■ 7. The authority citation for Part 774 continues to read as follows:

Authority: 50 U.S.C. app. 2401 *et seq.;* 50 U.S.C. 1701 *et seq.;* 10 U.S.C. 7420; 10 U.S.C. 7430(e); 22 U.S.C. 287c, 22 U.S.C. 3201 *et seq.,* 22 U.S.C. 6004; 30 U.S.C. 185(s), 185(u); 42 U.S.C. 2139a; 42 U.S.C. 6212; 43 U.S.C. 1354; 15 U.S.C. 1824a; 50 U.S.C. app. 5; 22 U.S.C. 7201 *et seq.;* 22 U.S.C. 7210; E.O. 13026, 61 FR 58767, 3 CFR, 1996 Comp., p. 228; E.O. 13222, 66 FR 44025, 3 CFR, 2001 Comp., p. 783; Notice of August 12, 2010, 75 FR 50681 (August 16, 2010).

■ 8. In Supplement No. 1 to Part 774 (the Commerce Control List), Category 4—Computers, ECCN 4A003 is amended by revising the AT entry and **Notes 1 and 2** in the License Requirements section, and paragraph b. in the Items paragraphs of the List of Items Controlled section, to read as follows:

Supplement No. 1 to Part 774—The Commerce Control List

* * * * *

4A003 ''Digital computers'', ''electronic assemblies'', and related equipment therefor, as follows and specially designed components therefor.

License Requirements

* * * * *

Control(s)	Country chart
* * * * *	
AT applies to entire entry ..... (refer to 4A994 for controls on ''digital computers'' ..... with a APP > 0.0128 but ≤ to 1.5 WT)	AT Column 1.
* * * * *	

Note 1: For all destinations, except those countries in Country Group E:1 of Supplement No. 1 to part 740 of the EAR, no license is required (NLR) for computers with an ''Adjusted Peak Performance'' (''APP'') not exceeding 1.5 Weighted TeraFLOPS (WT) and for ''electronic assemblies'' described in 4A003.c that are not capable of exceeding an ''Adjusted Peak Performance'' (''APP'') exceeding 1.5 Weighted TeraFLOPS (WT) in aggregation, except certain transfers as set forth in § 746.3 (Iraq).

Note 2: Special Post Shipment Verification reporting and recordkeeping requirements for exports of computers to destinations in Computer Tier 3 may be found in § 743.2 of the EAR.

* * * * *

List of Items Controlled

* * * * *

Items:

* * * * *

b. ''Digital computers'' having an ''Adjusted Peak Performance'' (''APP'') exceeding 1.5 weighted TeraFLOPS (WT);

* * * * *

Dated: June 15, 2011.

Kevin J. Wolf,

Assistant Secretary for Export Administration.

[FR Doc. 2011–15842 Filed 6–23–11; 8:45 am]

BILLING CODE 3510–33–P

DEPARTMENT OF HEALTH AND HUMAN SERVICES

Food and Drug Administration

21 CFR Part 50

[Docket No. FDA–2003–N–0212; (formerly Docket No. 2003N–0355)]

Medical Devices; Exception From General Requirements for Informed Consent

AGENCY: Food and Drug Administration, HHS.

ACTION: Final rule.

SUMMARY: The Food and Drug Administration (FDA) is issuing a final regulation to confirm, with one change, the interim final rule (IFR) entitled ''Medical Devices; Exception From General Requirements for Informed Consent.'' This final rule confirms the IFR's establishment of a new exception from the general requirements for informed consent to permit the use of investigational in vitro diagnostic devices to identify chemical, biological, radiological, or nuclear agents without informed consent in certain circumstances. FDA has created this exception to help ensure that individuals who may have been exposed to a chemical, biological, radiological, or nuclear agent are able to benefit from the timely use of the most appropriate diagnostic devices, including those that are investigational. This final rule adds a requirement that the investigator submit the required documentation to FDA, in addition to submitting it to the reviewing Institutional Review Board (IRB).

DATES: The rule is effective June 24, 2011.

FOR FURTHER INFORMATION CONTACT: Claudia M. Gaffey, Center for Devices and Radiological Health, Food and Drug Administration, 10903 New Hampshire Ave., Bldg. 66, rm. 5516, Silver Spring, MD 20993–0002, 301–796–6196.

SUPPLEMENTARY INFORMATION:

I. Background

A. Overview of Final Rule

In the **Federal Register** of June 7, 2006 (71 FR 32827), FDA published an Interim Final Rule that established an exception from the general requirements for informed consent to permit the use of investigational in vitro diagnostic devices to identify chemical, biological, radiological, or nuclear agents without informed consent in specified circumstances. The IFR amended 21 CFR 50.23, to add paragraph (e). The rule was issued under the authority set forth in section 520(g)(3)(D) of the Federal Food, Drug, and Cosmetic Act (the FD&C Act) (21 U.S.C. 360j(g)(3)(D)). FDA gave interested parties 60 days to comment on the IFR. FDA is publishing this final rule that incorporates one change in response to comments that the rule did not protect against misuse of the exception. This change is described in section II of this document.

B. Legal Authority

This regulation is being issued under the statutory authority provided in section 520(g)(3)(D) of the FD&C Act, which outlines the criteria under which an exemption from informed consent may be permissible. Under section 520(g)(3)(D) of the FD&C Act, informed consent is required unless the investigator determines the following in writing: (1) There exists a life threatening situation involving the human subject of such testing which necessitates the use of such device; (2) it is not feasible to obtain informed consent from the subject; and (3) there is not sufficient time to obtain such consent from the subject's legally authorized representative. Further, a licensed physician uninvolved in the testing must agree with this three-part determination in advance of using the device unless use of the device is required to save the life of the human subject of such testing and there is not sufficient time to obtain such concurrence.

II. Highlights of Final Rule

The preamble to the IFR described the provisions of this rule in detail (71 FR 32827). In issuing this final rule, FDA is making one change to the IFR, in response to comments that the rule did not protect against misuse of this limited exception from informed consent requirements. In response to those concerns, FDA is adding a requirement that investigators also send the required documentation to FDA, not just to the reviewing IRB. This new requirement provides an additional level of oversight to help ensure that the limited exception criteria are met.

III. Comments on the IFR

The Agency received comments on the IFR from nine different entities. Comments were received from four individual consumers, two from consumer groups, and one each from a health professional, a health professional group, and a local government. A summary of the comments received, grouped by subject matter follows.

A. General Comments

(Comment 1) Three comments expressed support for the IFR, noting that the rule is needed and greatly improves the ability of public health laboratories to respond to a public health emergency. In contrast, six comments expressed general concern that the rule presents too much risk to the consumer. Some comments raised issues that are beyond the scope of this rulemaking. For example, one of these comments suggested that informed consent documents have a line addressing in vitro diagnostic testing; another encouraged the production of templates to easily provide the detailed information required to be included in the reports.

(Response) FDA agrees with the comments recognizing that the rule will enable better response in public health emergencies. FDA also shares the

general concerns related to ensuring human subject protections. To that end, the Agency has ensured that the rule confers several layers of human subject protection, including IRB review, review and evaluation of the determinations made by the investigator by an independent physician, and disclosure of the investigational status of device to the subject's health care provider. FDA believes the rule balances the need to ensure human subjects are protected with the need to act quickly during a public health emergency and avoid potentially dangerous delays in using investigational devices to identify chemical, biological, radiological, or nuclear agents in human specimens.

(Comment 2) Two comments noted that the IFR has no provisions to prevent abuse.

(Response) FDA disagrees that the rule has no provisions to prevent abuse. The rule requires that the investigator and an independent physician each make specific determinations and that an IRB review these determinations. The determinations that the investigator and independent physician must make require careful consideration related to the use of the device and are intended to prevent abuse. However, FDA does agree that the IFR could have included an additional measure to prevent abuse of the exception; specifically, the IFR could have required that an investigator's documentation be submitted to the Agency, not just to the reviewing IRB. Although FDA relies on IRBs to adequately monitor the procedures set forth by the rule, the Agency recognizes that the IFR did not provide a mechanism for FDA to track the use of this exception from the general requirements for informed consent. Therefore, FDA is adding a requirement that the investigator submit to FDA the documentation required in 21 CFR 50.23(e)(1) or (e)(2) within 5 working days after the use of the device, in addition to submitting this information to the IRB within the same timeframe.

(Comment 3) One comment expressed concern that the only oversight over the determinations made by the investigator and the independent physician on behalf of the subject is that of the IRB and it will take 5 days. The comment claimed that consumers do not have confidence in IRB oversight and recommended the development of an open and clear process for choosing qualified individuals to be granted the extraordinary emergency power to waive informed consent, with opportunity for public comment.

(Response) The Agency agrees that the decision to enter subjects in clinical trials without informed consent is not a trivial matter and should be made by qualified individuals. The FD&C Act allows for carefully considered exceptions to the general requirements for informed consent in emergency circumstances. The requirements described in this rule follow section 520(g)(3)(D) of the FD&C Act. This rule is to be used during emergencies and, among other requirements, only when there are no cleared or approved available alternative methods of diagnosis to identify the chemical, biological, radiological, or nuclear agent that provides an equal or greater likelihood of saving the life of the subject.

In general, the rule assures that the determinations designed to safeguard the subject are made by two different and independent persons, i.e., the investigator and the independent physician, and that the use is then reviewed by the IRB. In the final rule, FDA is adding another level of oversight by requiring that investigators submit to FDA the same documentation they are required to submit to the IRB. FDA notes that this rule is intended for use in situations where public health laboratories must employ investigational in vitro diagnostic devices to diagnose patients when there are no approved or cleared diagnostic devices available that provide an equal or greater likelihood of saving patients' lives.

(Comment 4) Some comments contended that the rule will allow the use of experimental tests, which have an unknown rate of inaccurate test results.

(Response) FDA agrees that investigational in vitro diagnostic devices do not yet have established performance characteristics and, therefore, their accuracy is unknown until data collected during the investigation demonstrates the device's performance. FDA believes that when an investigational in vitro diagnostic device is needed to identify a chemical, biological, radiological, or nuclear agent and no cleared or approved alternative method of diagnosis is available that provides an equal or greater likelihood of saving the life of the subject, the benefits of the investigational in vitro diagnostic device outweigh the risks. The rule creates an exception to the general requirement for informed consent under these circumstances.

(Comment 5) One comment stated that if the patient is awake there is no justification for not obtaining informed consent.

(Response) The rule contemplates the scenario when the person directing the specimen collection does not know, at the time the specimen is collected, that an investigational device may need to be used in the future, usually by reference laboratories far from where the specimen was collected. Because of the geographic and temporal separation between specimen collection and testing for a life-threatening agent, to obtain informed consent would require a number of steps and introduce unacceptable delays, independent of whether the patient is physically able to provide informed consent.

B. Notification Obligations

(Comment 6) One comment stated that the notification obligations of the investigator described in the IFR are too complex, stating it should be sufficient to have a certification by the laboratory director declaring that the investigational test was performed in accordance with the rule and to send to the subject a copy of the notice sent to the IRB. The comment also noted that the concurrence of an independent physician adds no value.

(Response) The Agency believes that the notification obligations of the investigator described in this rule, which are similar to the obligations described in other exceptions from the general requirements of informed consent under 21 CFR 50.23, are needed because they are intended to provide added human subject protections and to prevent abuses. Moreover, concurrence of an independent physician is mandated by section 520(g)(3)(D) of the FD&C Act.

C. Notification of Public Health Authorities

(Comment 7) One comment requested the inclusion of explicit language in the rule directing the investigator to notify or report positive results to public health authorities when appropriate or required by State or Federal law.

(Response) FDA agrees that it is important to report the detection of biologic, chemical, nuclear, or radiological agents to public health authorities and encourages this practice. FDA expects this reporting to occur when appropriate or when required under Federal or State law.

D. Interpretation of the Term ''Investigator''

(Comment 8) One comment asked whether the term ''investigator'' can be interpreted to mean the single entity that deploys the investigational device, in which case it would be possible to use a centralized IRB and have the deploying entity be responsible for the reporting requirements.

(Response) For purposes of this regulation, the Agency interprets the term ''investigator'' to mean the individual who actually conducts a clinical investigation, i.e., under whose immediate direction the test article is administered or dispensed or used in the diagnosis or treatment of a subject. In the event of an investigation conducted by a team of individuals, we use the term ''investigator'' to mean the responsible leader of that team. (See 21 CFR 50.3(d)). For purposes of this rule, we anticipate that the investigator will generally be the director of the clinical laboratory using the investigational device. This interpretation does not preclude local IRBs from deferring their review to a centralized IRB, provided that the IRB meets the requirements of 21 CFR part 56.

E. Written Certification Timing

(Comment 9) One comment requested that FDA consider extending the number of days allowed for submitting the written certification for the exception. (Under the rule the investigator has 5 working days after the use of the investigational device to submit the investigator's determinations and those of the independent physician to the IRB.)

(Response) FDA disagrees with this comment. The requirement that the investigator's determinations and those of the independent physician be submitted to the IRB within 5 working days, which is similar to the obligations described in other exceptions from the general requirements of informed consent under 21 CFR 50.23, are intended to assure prompt action by the IRB, as needed.

F. Other Public Health Emergency

(Comment 10) Two comments contended that the term ''other public health emergency'' is vague and should be removed or should be revised to specify in exact terms what constitutes a public health emergency worthy of this extraordinary exception from informed consent.

(Response) For purposes of this rule, the term ''other public health emergency'' means serious domestic emergencies that have the potential to significantly impact public health such as those caused by deadly weather disasters or by widespread infectious disease such as pandemic influenza.

G. Withdrawal of Previously Collected Data

(Comment 11) One comment requested that the following preamble statement, ''subjects or their legally authorized representatives will not be entitled to withdraw previously collected data from the research database * * *'' (71 FR 32827 at 32830), be eliminated because it sets a dangerous precedent by allowing government research to take priority over personal privacy.

(Response) FDA does not agree to eliminate the referenced statement. While a subject may withdraw from a study, FDA reiterates that the withdrawal does not extend to the data already obtained during the time the subject was enrolled. FDA's longstanding position has been that all data collected up to the point of withdrawal is to be maintained in the database and included in subsequent analyses, as appropriate, in order for the study to be scientifically valid.[1] If a subject withdraws from a study, removal of already collected data would undermine the scientific, and therefore the ethical, integrity of the research.

IV. Applicability of 45 CFR Part 46 and Other Legal Requirements

As described in the IFR, some of the activities described in this rule may also constitute non-exempt human subjects research within the meaning of 45 CFR part 46, according to the Office for Human Research Protection (OHRP) in the Department of Health and Human Services (HHS). In particular, the use of the investigational in vitro diagnostic device on individually identifiable human specimens as described in this rule would not be human subjects research under 45 CFR part 46, while the analysis of the individually identifiable data obtained from the use of the investigational device to determine the safety and effectiveness of the device would be considered human subject research under 45 CFR part 46. If the analysis of individually identifiable data involves non-exempt human subjects research that is conducted or supported by HHS, the institution conducting the analysis must obtain an OHRP-approved assurance. In addition, this means that this research activity, if not exempt, i.e., the analysis of the individually identifiable data, must be reviewed prospectively by an IRB and must be conducted with the informed consent of the subjects unless waived. OHRP expects that IRBs will often find that informed consent may be waived under 45 CFR 46.116(d) for the analysis of the individually identifiable data obtained through the use of the investigational device. OHRP issued guidance regarding this issue simultaneously with the publication of the IFR, on June 7, 2006. This guidance can be found at *http://www.hhs.gov/ohrp/policy/invitrodev.html.* Those interested in seeking additional information concerning the application of the regulations at 45 CFR part 46 should contact OHRP. We note that research conducted or supported by another Department or Agency may be subject to other laws and regulations. Sponsors should check to see if they are complying with all applicable requirements.

V. Analysis of Economic Impacts

FDA has examined the impacts of the final rule under Executive Order 12866 and the Regulatory Flexibility Act (5 U.S.C. 601–612), and the Unfunded Mandates Reform Act of 1995 (Pub. L. 104–4). Executive Order 12866 directs Agencies to assess all costs and benefits of available regulatory alternatives and, when regulation is necessary, to select regulatory approaches that maximize net benefits (including potential economic, environmental, public health and safety, and other advantages; distributive impacts; and equity). The Agency believes that this final rule is not a significant regulatory action under the Executive order.

The Regulatory Flexibility Act requires Agencies to analyze regulatory options that would minimize any significant impact of a rule on small entities. Because this action provides an exception from an otherwise applicable requirement for investigators, FDA believes that it does not impose a significant burden. The Agency certifies that the final rule will not have a significant economic impact on a substantial number of small entities.

Section 202(a) of the Unfunded Mandates Reform Act of 1995 requires that Agencies prepare a written statement, which includes an assessment of anticipated costs and benefits, before proposing ''any rule that includes any Federal mandate that may result in the expenditure by State, local, and tribal governments, in the aggregate, or by the private sector, of $100,000,000 or more (adjusted annually for inflation) in any one year.'' The current threshold after adjustment for inflation is $135 million, using the most current (2009) Implicit Price Deflator for the Gross Domestic Product. FDA does not expect this final rule to result in any 1-year expenditure that would meet or exceed this amount.

VI. Federalism

FDA has analyzed this final rule in accordance with the principles set forth

[1] See ''Guidance for Sponsors, Clinical Investigators, and IRBs—Data Retention When Subjects Withdraw from FDA–Regulated Clinical Trials,'' found at *http://www.fda.gov/downloads/RegulatoryInformation/Guidances/UCM126489.pdf.*

in Executive Order 13132. Section 4(a) of the Executive order requires Agencies to ''construe * * * a Federal statute to preempt State law only where the statute contains an express preemption provision or there is some other clear evidence that the Congress intended preemption of State law, or where the exercise of State or authority conflicts with the exercise of Federal authority under the Federal statute.'' Federal law includes an express preemption provision that preempts certain state requirements ''different from or in addition to'' certain federal requirements applicable to devices. 21 U.S.C. 360k; see *Medtronic* v. *Lohr,* 518 U.S. 470 (1996); *Riegel* v. *Medtronic,* 128 S. Ct. 999 (2008). This final rule creates requirements for specific medical devices under 21 U.S.C. 360k. *Papike* v. *Tambrands, Inc.,* 107 F.3d 737, 740–42 (9th Cir. 1997).

VII. The Paperwork Reduction Act of 1995

This final rule contains information collection provisions that are subject to review by the Office of Management and Budget (OMB) under the Paperwork Reduction Act of 1995 (44 U.S.C. 3501–3520). The title, description, and respondent description of the information collection provisions are shown in the following paragraphs with an estimate of the annual reporting and recordkeeping burden. Included in the estimate is the time for reviewing instructions, searching existing data sources, gathering and maintaining the data needed, and completing and reviewing each collection of information.

Title: Medical Devices; Exception From General Requirements for Informed Consent.

Description: The final rule amends FDA's informed consent regulation to provide an exception from the general requirement to obtain informed consent from the subject of an investigation involving an unapproved or uncleared in vitro diagnostic device intended to identify a chemical, biological, radiological, or nuclear agent. For the exception to apply, it is necessary for the investigator and an independent licensed physician to make the determination and certify in writing certain facts concerning the need for use of the investigational in vitro diagnostic device without informed consent (21 CFR 50.23(e)(1)). When reporting the test results to the subject's health care provider and, possibly, to the appropriate public health authorities, the investigator must disclose the investigational status of the in vitro diagnostic device (21 CFR 50.23(e)(4)). If use of the device is necessary to preserve the life of the subject and there is not sufficient time to obtain the determination of the independent licensed physician in advance of using the investigational device, 21 CFR 50.23(e)(2) provides that the determination must be made within 5 working days of use of the device. In either case, the certifications are submitted to the IRB within 5 working days after the use of the device (21 CFR 50.23(e)(3)).

The information collection requirements in 21 CFR 50.23(e)(1), (e)(2), and (e)(4) in the IFR have been approved under OMB control number 0910–0586. The information collection requirement in 21 CFR 50.23(e)(3) (submitting the certifications to the IRB) was considered part of the burden for 21 CFR 50.23(e)(1) and (e)(2).

This final rule makes one change to the regulatory requirements established by the IFR. This change requires the investigator to submit the documentation required in 21 CFR 50.23(e)(1) and (e)(2) to FDA, in addition to the reviewing IRB. The documentation the investigator must submit to FDA is identical to the documentation the investigator must submit to the IRB.

Description of Respondents: Clinical laboratory directors, physicians who are investigators.

FDA estimates the burden of the collection of information as follows:

TABLE 1—ESTIMATED ANNUAL REPORTING BURDEN [1]

21 CFR Part	Number of respondents	Number of responses per respondent	Total annual responses	Average burden per response (in hours)	Total hours	Total operating & maintenance costs
50.23(e)(3)	150	3	450	15/60	113	$100

[1] There are no capital costs associated with this collection of information.

From its knowledge of in vitro diagnostic device investigations, FDA estimates that there are approximately 150 laboratory directors or physicians who could perform this type of testing and, as investigators, are required to comply with information collection and recordkeeping. FDA estimates that there are approximately 450 naturally occurring cases of this type each year. Based on its knowledge of similar types of submissions, FDA estimates that it will take about .25 hour or 15 minutes to prepare each written documentation to be submitted to FDA as required by 21 CFR 50.23(e)(3). The estimated 112.5 total hours was calculated by multiplying the estimated total annual response by the hours per response.

In compliance with the Paperwork Reduction Act of 1995, the collection of information in this final rule has been submitted to OMB for review. The new information has been submitted as a revision to the previously approved collection OMB control number 0910–0586.

This final rule also refers to previously approved collections of information found in FDA regulations. These collections of information are subject to review by OMB under the Paperwork Reduction Act of 1995. The collections of information in 21 CFR 56.115 have been approved under OMB control number 0910–0130; and the collections of information in 21 CFR 50.23(e)(1), (e)(2), and (e)(4) have been approved under OMB control number 0910–0586.

VIII. Analysis of Environmental Impact

The Agency has determined under 21 CFR 25.30(h) that this action is of a type that does not individually or cumulatively have a significant effect on the human environment. Therefore, neither an environmental assessment nor an environmental impact statement is required.

List of Subjects in 21 CFR Part 50

Human research subjects, Prisoners, Reporting and recordkeeping requirements, Safety.

Accordingly, the interim final rule amending 21 CFR part 50 which was published at 71 FR 32827 on June 7, 2006, is adopted as a final rule with the following change:

PART 50—PROTECTION OF HUMAN SUBJECTS

■ 1. The authority citation for 21 CFR part 50 continues to read as follows:

Authority: 21 U.S.C. 321, 343, 346, 346a, 348, 350a, 350b, 352, 353, 355, 360, 360c–360f, 360h–360j, 371, 379e, 381; 42 U.S.C. 216, 241, 262, 263b–263n.

■ 2. Revise § 50.23(e)(3) to read as follows:

§ 50.23 Exception from general requirements.

* * * * *

(e) * * *

(3) The investigator must submit the written certification of the determinations made by the investigator and an independent physician required in paragraph (e)(1) or (e)(2) of this section to the IRB and FDA within 5 working days after the use of the device.

* * * * *

Dated: June 17, 2011.

Leslie Kux,

Acting Assistant Commissioner for Policy.

[FR Doc. 2011–15816 Filed 6–23–11; 8:45 am]

BILLING CODE 4160–01–P

DEPARTMENT OF HEALTH AND HUMAN SERVICES

Food and Drug Administration

21 CFR Part 882

[Docket No. FDA–1997–N–0040] (formerly Docket No. 1997N–0484P)

Medical Devices; Neurological Devices; Clarification of Classification for Human Dura Mater; Technical Amendment

AGENCY: Food and Drug Administration, HHS.

ACTION: Final rule; technical amendment.

SUMMARY: The Food and Drug Administration (FDA) is amending the device regulations to clarify the applicability of the device classification for human dura mater. This action is being taken to improve the accuracy of the regulations.

DATES: This final rule is effective June 24, 2011.

FOR FURTHER INFORMATION CONTACT: Melissa Reisman, Center for Biologics Evaluation and Research (HFM–17), Food and Drug Administration, 1401 Rockville Pike, suite 200N, Rockville, MD 20852–1448, 301–827–6210.

SUPPLEMENTARY INFORMATION: FDA is clarifying the regulatory authority for human dura mater in the Agency's codified regulations for part 882 (21 CFR part 882). In the **Federal Register** of November 24, 2004 (69 FR 68612), FDA published a final rule regarding current good tissue practice for establishments that manufacture human cell, tissue, and cellular and tissue-based products (HCT/Ps). That rule became effective on May 25, 2005. Prior to the effective date of the final rule, human dura mater was regulated as a medical device under § 882.5975. As stated in the final rule, human dura mater is now defined under 21 CFR 1271.3(d) as a HCT/P. As such, it is regulated under section 361 of the Public Health Service Act (42 U.S.C. 264) and the requirements of 21 CFR part 1271, including requirements related to registration and listing, donor eligibility determinations, and current good tissue practice. Accordingly, the device classification contained in § 882.5975 is only applicable for human dura mater recovered prior to the effective date of the final rule, May 25, 2005. The final rule omitted a corresponding annotation to § 882.5975 to clarify that the device classification is only applicable for human dura mater recovered prior to the effective date of the final rule. This document clarifies the regulatory authority for human dura mater. Publication of this document constitutes final action under the Administrative Procedure Act (5 U.S.C. 553). FDA has determined that notice and public comment are unnecessary because this amendment is nonsubstantive.

List of Subjects in 21 CFR Part 882

Medical devices, Neurological devices.

Therefore, under the Federal Food, Drug, and Cosmetic Act and under authority delegated to the Commissioner of Food and Drugs, 21 CFR part 882 is amended as follows:

PART 882—NEUROLOGICAL DEVICES

■ 1. The authority citation for 21 CFR part 882 continues to read as follows:

Authority: 21 U.S.C. 351, 360, 360c, 360e, 360j, 371.

■ 2. Section 882.5975 is amended by adding paragraph (c) to read as follows:

§ 882.5975 Human dura mater.

* * * * *

(c) *Scope.* The classification set forth in this section is only applicable to human dura mater recovered prior to May 25, 2005.

Dated: June 17, 2011.

Leslie Kux,

Acting Assistant Commissioner for Policy.

[FR Doc. 2011–15817 Filed 6–23–11; 8:45 am]

BILLING CODE 4160–01–P

DEPARTMENT OF THE TREASURY

Internal Revenue Service

26 CFR Part 1

[TD 9530]

RIN 1545–BH56

Guidance Under Section 956 for Determining the Basis of Property Acquired in Certain Nonrecognition Transactions

AGENCY: Internal Revenue Service (IRS), Treasury.

ACTION: Final and temporary regulations.

SUMMARY: This document contains final and temporary regulations under section 956 of the Internal Revenue Code (Code) regarding the determination of basis in certain United States property acquired by a controlled foreign corporation in certain nonrecognition transactions that are intended to repatriate earnings and profits of the controlled foreign corporation without U.S. income taxation. The regulations affect United States shareholders of a controlled foreign corporation that acquires United States property in certain nonrecognition transactions.

DATES: *Effective Date:* These regulations are effective on June 24, 2011.

Applicability Date: For dates of applicability, see § 1.956–1(e)(6)(vii).

FOR FURTHER INFORMATION CONTACT: Kristine A. Crabtree at (202) 622–3840 (not a toll-free number).

SUPPLEMENTARY INFORMATION:

Background and Explanation of Provisions

On June 24, 2008, the IRS published final and temporary regulations under section 956 (TD 9402) in the **Federal Register** (73 FR 35580). On the same date, the IRS published a notice of proposed rulemaking (REG–102122–08) (the proposed regulations) in the **Federal Register** (73 FR 35606) cross-referencing the temporary regulations. The temporary and proposed regulations provided guidance regarding the determination of basis in certain United States property (as defined in section 956(c)) acquired by a controlled foreign corporation (as defined in section 957(a)) in certain nonrecognition

transactions that are intended to repatriate earnings and profits of the controlled foreign corporation without an income inclusion by its United States shareholders under section 951(a)(1)(B). The purpose of these regulations is to prevent a United States shareholder of a controlled foreign corporation from avoiding an income inclusion under section 951(a)(1)(B) where the controlled foreign corporation acquires United States property in an exchange to which these regulations apply and claims a basis in the United States property that is less than the amount of earnings and profits repatriated. No comments in response to the proposed regulations were received and no public hearing was requested or held. This Treasury decision adopts the proposed regulations with minor changes, described below, as final regulations and removes the corresponding temporary regulations.

Language was added to § 1.956–1(e)(6)(iii) to clarify the effect of the assumption of a liability by a controlled foreign corporation in connection with an exchange to which § 1.956–1(e)(6) applies. The final regulations also modify § 1.956–1(e)(6)(v) to address the situation in which the controlled foreign corporation exchanges specified United States property the adjusted basis in which has been determined under § 1.956–1(e)(6) for other United States property, by providing that for purposes of applying section 956 the controlled foreign corporation's adjusted basis in the other United States property is no less than its adjusted basis in the specified United States property as determined under § 1.956–1(e)(6)(iii). A cross-reference to the anti-abuse rule of § 1.956–1T(b)(4) was also added to § 1.956–1(e)(6)(vi), *Example 3.*

Effective/Applicability Dates

These final regulations apply to property acquired in exchanges occurring on or after June 24, 2011. For transactions that occur prior to June 24, 2011, see § 1.956–1T(e)(6) as contained in 26 CFR Part 1 revised as of April 1, 2011.

Special Analyses

It has been determined that this Treasury decision is not a significant regulatory action as defined in Executive Order 12866; therefore, a regulatory assessment is not required. It also has been determined that section 553(b) of the Administrative Procedure Act (5 U.S.C. chapter 5) does not apply to these regulations, and because the regulations do not impose a collection of information on small entities, the Regulatory Flexibility Act (5 U.S.C. chapter 6) does not apply. Pursuant to section 7805(f) of the Code, these regulations have been submitted to the Chief Counsel for Advocacy of the Small Business Administration for comment on its impact on small business.

Drafting Information

The principal author of these regulations is Kristine A. Crabtree, Office of Associate Chief Counsel (International). However, other personnel from the IRS and the Treasury Department participated in their development.

List of Subjects in 26 CFR Part 1

Income taxes, Reporting and recordkeeping requirements.

Adoption of Amendments to the Regulations

Accordingly, 26 CFR part 1 is amended as follows:

PART 1—INCOME TAXES

■ **Paragraph 1.** The authority citation for part 1 is amended by adding entries in numerical order to read in part as follows:

Authority: 26 U.S.C. 7805 * * *

Section 1.956–1(e)(6) also issued under 26 U.S.C. 367(b) and 956(e).

■ **Par. 2.** Section 1.956–1 is amended by revising the last sentence of paragraph (e)(1), revising paragraphs (e)(5) and (e)(6), and removing paragraph (f).

The revisions read as follows:

§ 1.956–1 Shareholder's pro rata share of a controlled foreign corporation's increase in earnings invested in United States property.

* * * * *

(e) * * *

(1) * * * See § 1.956–1(e)(6) for a special rule for determining amounts attributable to United States property acquired as the result of certain nonrecognition transactions.

* * * * *

(5) [Reserved]. For further guidance, see § 1.956–1T(e)(5).

(6) *Adjusted basis of property acquired in certain nonrecognition transactions*—(i) *Scope.* This paragraph (e)(6) provides rules for determining, solely for purposes of applying section 956, the adjusted basis of specified United States property acquired by a controlled foreign corporation pursuant to an exchange in which the controlled foreign corporation's basis in such specified United States property is determined under section 362(a). This paragraph (e)(6) also applies if specified United States property, the adjusted basis in which has been determined under these regulations, is transferred (in one or more subsequent exchanges) to a related person (within the meaning of section 954(d)(3)), pursuant to one or more exchanges in which the related person's adjusted basis in such property is determined, in whole or in part, by reference to the transferor controlled foreign corporation's adjusted basis in such property.

(ii) *Definition of specified United States property.* For purposes of this paragraph (e)(6), *specified United States property* is stock of a domestic corporation described in section 956(c)(1)(B) or an obligation of a domestic corporation described in section 956(c)(1)(C) that is acquired by a controlled foreign corporation from the domestic issuing corporation. Specified United States property does not include property described in section 956(c)(2).

(iii) *Adjusted basis of specified United States property.* Solely for purposes of applying section 956, the adjusted basis of specified United States property acquired by a controlled foreign corporation in connection with an exchange to which this paragraph (e)(6) applies shall be no less than the fair market value of any property transferred by the controlled foreign corporation in exchange for such specified United States property. For purposes of this paragraph (e)(6), the term *property* has the meaning set forth in section 317(a), but also includes any liability that is assumed by the controlled foreign corporation in connection with the exchange notwithstanding the application of section 357(a). The assumption of a liability by the controlled foreign corporation in connection with the exchange will be considered the transfer of property. The fair market value of such property will be the amount of the liability assumed. The fair market value of any property transferred by the controlled foreign corporation in exchange for the specified United States property shall be determined at the time of the exchange.

(iv) *Timing.* For purposes of § 1.956–2(d)(1)(i)(a), a controlled foreign corporation that acquires specified United States property in an exchange to which this paragraph (e)(6) applies acquires an adjusted basis in such property at the time of the controlled foreign corporation's exchange of property for such specified United States property.

(v) *Transfers to related persons.* If a controlled foreign corporation transfers specified United States property, the adjusted basis in which has been determined under this paragraph (e)(6), to a related person (within the meaning

of section 954(d)(3)) (related person transferee) in one or more exchanges pursuant to which the related person transferee's adjusted basis in such specified United States property is determined, in whole or in part, by reference to the controlled foreign corporation's adjusted basis in such specified United States property, then, solely for purposes of applying section 956 following such exchange, the controlled foreign corporation's adjusted basis in any United States property received in the exchange (or exchanges) shall be no less than the aggregate adjusted basis of the specified United States property as determined under paragraph (e)(6)(iii) of this section, and the related person transferee's adjusted basis in such specified United States property shall be no less than the adjusted basis of such specified United States property in the hands of the controlled foreign corporation as determined under paragraph (e)(6)(iii) of this section. This paragraph (e)(6)(v) shall also apply in the case of one or more successive transfers of the specified United States property by a related person transferee to one or more persons related to the controlled foreign corporation (within the meaning of section 954(d)(3)). This paragraph (e)(6)(v) shall apply regardless of whether a subsequent transfer was part of a plan (or series of related transactions) that includes the controlled foreign corporation's acquisition of the specified United States property.

(vi) *Examples.* The rules of this paragraph (e)(6) are illustrated by the following examples:

Example 1. (i) *Facts.* USP, a domestic corporation, is the common parent of an affiliated group that joins in the filing of a consolidated return. USP owns 100 percent of the stock of US1 and US2, both domestic corporations and members of the USP consolidated group. US1 owns 100 percent of the stock of CFC, a controlled foreign corporation. US2 issues $100x of its stock to CFC in exchange for $10x of CFC stock and $90x cash. US2's transfer of its stock to CFC is described in section 351, US2 recognizes no gain in the exchange under section 1032(a), and CFC's basis in the US2 stock acquired in the exchange is determined under section 362(a).

(ii) *Analysis.* The US2 stock acquired by CFC in the exchange constitutes specified United States property under paragraph (e)(6)(ii) of this section because CFC acquires the US2 stock from US2, the issuing corporation. Therefore, because CFC's adjusted basis in the US2 stock is determined under section 362(a), then for purposes of applying section 956, CFC's adjusted basis in the US2 stock shall, under paragraph (e)(6)(iii) of this section, be no less than $90x, the fair market value of the property exchanged by CFC for the US2 stock (the $10x of CFC stock issued in the exchange does not constitute property for purposes of paragraph (e)(6)(iii) of this section). Pursuant to paragraph (e)(6)(iv) of this section, for purposes of § 1.956–2(d)(1)(i)(a) CFC shall be treated as acquiring its adjusted basis of no less than $90x in the US2 stock at the time of its transfer of property to US2 in exchange for the US2 stock. The result would be the same if, instead of CFC transferring $90x of cash to US2 in the exchange, CFC assumes a $90x liability of US2.

Example 2. (i) *Facts.* USP, a domestic corporation, owns 100 percent of the stock of USS, a domestic corporation. USP also owns 100 percent of the stock of CFC, a controlled foreign corporation. USP's adjusted basis in its USS stock equals the fair market value of the USS stock, or $100x. USP transfers its USS stock to CFC in exchange for $100x of CFC stock. USP's transfer of its USS stock to CFC is described in section 351, USP recognizes no gain in the exchange under section 351(a), and CFC's adjusted basis in the USS stock acquired in the exchange, determined under section 362(a), equals $100x.

(ii) *Analysis.* The USS stock acquired by CFC in the exchange does not constitute specified United States property under paragraph (e)(6)(ii) of this section because CFC acquires the USS stock from USP. Therefore, CFC's adjusted basis in the USS stock, for purposes of section 956, is not determined under this paragraph (e)(6). Instead, CFC's adjusted basis in the USS stock is determined under the general rule of section 956(a) and under paragraphs (e)(1) through (4) of this section. As determined under section 362(a), CFC's adjusted basis in the USS stock is $100x.

Example 3. (i) *Facts.* USP, a domestic corporation, owns 100 percent of the stock of CFC1, a controlled foreign corporation. CFC1 holds specified United States property (within the meaning of paragraph (e)(6)(ii) of this section) with an adjusted basis of $30x for purposes of applying section 956 that was determined under paragraph (e)(6)(iii) of this section. CFC1 owns 100 percent of the stock of CFC2, a controlled foreign corporation. CFC1 transfers the specified United States property to CFC2 in an exchange described in section 351. CFC2's adjusted basis in the specified United States property is determined under section 362(a).

(ii) *Analysis.* In the section 351 exchange, CFC1 transferred specified United States property to CFC2 with an adjusted basis that was determined under paragraph (e)(6)(iii) of this section. Further, CFC2's adjusted basis in the specified United States property is determined under section 362(a) by reference, in whole or in part, to CFC1's adjusted basis in such property. Therefore, for purposes of applying section 956, pursuant to paragraph (e)(6)(v) of this section CFC2's adjusted basis in the specified United States property shall be no less than $30x. Paragraph (e)(6)(v) of this section would also apply if CFC2 subsequently transfers the specified United States property to another person related to CFC1 (within the meaning of section 954(d)(3)) if such related person's adjusted basis in the specified United States property is determined by reference, in whole or in part, to CFC2's adjusted basis in such property. See also § 1.956–1T(b)(4) if one of the principal purposes of CFC1's transfer of property to CFC2 was the avoidance of the application of section 956 with respect to CFC1.

(vii) *Effective/applicability dates.* This paragraph (e)(6) applies to property acquired in exchanges occurring on or after June 24, 2011. For transactions that occur prior to June 24, 2011, see § 1.956–1T(e)(6) as contained in 26 CFR Part 1 revised as of April 1, 2011.

■ **Par. 3.** Section 1.956–1T is amended by removing paragraph (e)(6) and revising paragraph (f) to read as follows:

§ 1.956–1T Shareholder's pro rata share of a controlled foreign corporation's increase in earnings invested in United States property (temporary).

* * * * *

(f) *Effective/applicability date.* Paragraph (e)(5) of this section applies to investments made on or after June 14, 1988.

Steven T. Miller,

Deputy Commissioner for Services and Enforcement.

Approved: June 11, 2011.

Emily S. Mahon,

Acting Assistant Secretary of the Treasury (Tax Policy).

[FR Doc. 2011–15741 Filed 6–23–11; 8:45 am]

BILLING CODE 4830–01–P

DEPARTMENT OF THE TREASURY

Internal Revenue Service

26 CFR Part 1

[TD 9529]

RIN 1545–BK01

Requirements for Taxpayers Filing Form 5472; Correction

AGENCY: Internal Revenue Service (IRS), Treasury.

ACTION: Correcting amendment.

SUMMARY: This document contains correcting amendments to temporary regulations (TD 9529) that were published in the **Federal Register** on Friday, June 10, 2011 (76 FR 33997) removing the duplicate filing requirement for Form 5472, ''Information Return of a 25% Foreign-Owned U.S. corporation or a Foreign Corporation Engaged in a U.S. Trade or Business.''

DATES: This correction is effective on June 24, 2011, and is applicable on June 10, 2011.

FOR FURTHER INFORMATION CONTACT: Gregory A. Spring, (202) 435–5265 (not a toll-free number).

SUPPLEMENTARY INFORMATION:

Background

The temporary regulations that are the subject of this correction are under section 6038A of the Internal Revenue Code.

Need for Correction

As published, temporary regulations (TD 9529) contain errors that may prove to be misleading and are in need of clarification.

List of Subjects in 26 CFR Part 1

Income taxes, Reporting and recordkeeping requirements.

Correction of Publication

Accordingly, 26 CFR part 1 is corrected by making the following correcting amendments:

PART 1—INCOME TAXES

■ **Paragraph 1.** The authority citation for part 1 continues to read in part as follows:

Authority: 26 U.S.C. 7805 * * *

■ **Par. 2.** Section 1.6038A–1T is amended by adding paragraph (o) to read as follows:

§ 1.6038A–1T General requirements and definitions (temporary).

* * * * *

(o) *Expiration date.* The applicability of this section expires on June 10, 2014.

* * * * *

■ **Par. 3.** Section 1.6038A–2T is amended by adding paragraph (i) to read as follows:

§ 1.6038A–2T Requirement of return (temporary).

* * * * *

(i) *Expiration date.* The applicability of this section expires on June 10, 2014.

* * * * *

LaNita Van Dyke,

Chief, Publications and Regulations Branch, Legal Processing Division, Associate Chief Counsel (Procedure and Administration).

[FR Doc. 2011–15943 Filed 6–23–11; 8:45 am]

BILLING CODE 4830–01–P

DEPARTMENT OF THE TREASURY

Internal Revenue Service

26 CFR Part 1

[TD 9529]

RIN 1545–BK01

Requirements for Taxpayers Filing Form 5472; Correction

AGENCY: Internal Revenue Service (IRS), Treasury.

ACTION: Correction to temporary regulations.

SUMMARY: This document contains corrections to temporary regulations (TD 9529) that were published in the **Federal Register** on Friday, June 10, 2011 (76 FR 33997) removing the duplicate filing requirement for Form 5472, ''Information Return of a 25% Foreign-Owned U.S. corporation or a Foreign Corporation Engaged in a U.S. Trade or Business.''

DATES: This correction is effective on June 24, 2011, and is applicable on June 10, 2011.

FOR FURTHER INFORMATION CONTACT: Gregory A. Spring, (202) 435–5265 (not a toll-free number).

SUPPLEMENTARY INFORMATION:

Background

The temporary regulations that are the subject of this correction are under section 6038A of the Internal Revenue Code.

Need for Correction

As published, temporary regulations (TD 9529) contain errors that may prove to be misleading and are in need of clarification.

Correction of Publication

Accordingly, the publication of the temporary regulations (TD 9529) which were the subject of FR Doc. 2011–14468 is corrected as follows:

1. On page 33998, column 3, in the preamble, under the paragraph heading ''Special Analyses'', the last paragraph of the column, first and second lines, the language ''It has been determined that this temporary regulation is not a significant'' is corrected to read ''It has been determined that these temporary regulations are not a significant''.

2. On page 33999, column 1, in the preamble, under the paragraph heading ''Special Analyses'', the first paragraph of the column, third and fourth lines, the language ''section 7805(f) of the Code, this regulation has been submitted to the'' is corrected to read ''section 7805(f) of the Code, these regulations have been submitted to the''.

3. On page 33999, column 1, in the preamble, under the paragraph heading ''Drafting Information'', sixth line of the paragraph, the language ''Department participated in its'' is corrected to read ''Department participated in their''.

LaNita Van Dyke,

Chief, Publications and Regulations Branch, Legal Processing Division, Associate Chief Counsel (Procedure and Administration).

[FR Doc. 2011–15946 Filed 6–23–11; 8:45 am]

BILLING CODE 4830–01–P

DEPARTMENT OF THE TREASURY

Internal Revenue Service

26 CFR Parts 1 and 54

[TD 9531]

RIN 1545–BH88

Extension of Time for Filing Returns

AGENCY: Internal Revenue Service (IRS), Treasury.

ACTION: Final and removal temporary regulations

SUMMARY: This document contains final regulations relating to the automatic extensions of time to file returns for partnership, trust, and estate taxpayers, and automatic extensions of time for filing returns for pension excise taxes. The objective of these final regulations is to reduce overall taxpayer burden by providing an extension period that strikes the most reasonable balance for these pass-through entities and the large number of taxpayers who require information from these entities for completion of their income tax returns.

DATES: *Effective Date:* These regulations are effective on June 24, 2011.

Applicability Date: For dates of applicability of these regulations, see §§ 1.6081–2(h), 1.6081–6(g), and 54.6081–1(f).

FOR FURTHER INFORMATION CONTACT: Jason Bremer, (202) 622–4910 (not a toll-free number).

SUPPLEMENTARY INFORMATION:

Background

This document contains amendments to 26 CFR parts 1 and 54 under section 6081 of the Internal Revenue Code (Code). On November 8, 2005, the Treasury Department and the IRS published a notice of proposed rulemaking (REG–144898–04) by cross-reference to temporary regulations (TD 9229) in the **Federal Register** (70 FR 67356, 70 FR 67397) relating to the simplification of procedures for obtaining automatic extensions of time

to file certain returns. On July 1, 2008, the Treasury Department and the IRS published final and temporary regulations (TD 9407) in the **Federal Register** (73 FR 37362) finalizing the rules simplifying the procedures for obtaining automatic extensions of time to file certain returns. A notice of proposed rulemaking (REG–115457–08) cross-referencing the temporary regulations also was published in the **Federal Register** (73 FR 37389) on July 1, 2008. The temporary and proposed regulations reduced the automatic six-month extension of time to file contained in the 2005 proposed regulations to five months for certain pass-through entities (most partnerships, estates, and certain trusts).

As these pass-through entities were previously allowed to obtain an automatic six-month extension of time to file certain returns, the Treasury Department and the IRS requested comments on whether, and how, a five-month extension of time to file for these pass-through entities might increase or reduce overall taxpayer burden. Approximately 70 comments were received in response to the notice of proposed rulemaking. A public hearing was held on January 13, 2009. Three speakers appeared at the public hearing and commented on the notice of proposed rulemaking.

All comments were considered and are available for public inspection at *http://www.regulations.gov* or upon request. After consideration of the written comments and the comments provided at the public hearing, the proposed regulations under section 6081 are adopted as revised by this Treasury decision. The public comments, public hearing, and the revisions are discussed in this preamble.

Explanation and Summary of Comments

Prior to issuance of the 2005 temporary regulations, TD 9229, pass-through entities were entitled to an automatic three-month extension of time to file certain returns by filing one form, and could also request a discretionary additional three-month extension of time to file by filing a second form. TD 9229 provided temporary regulations that simplified the extension process by allowing most taxpayers, including pass-through entities, to obtain a six-month automatic extension of time to file by filing one single form. In the 2008 final and temporary regulations, TD 9407, the Treasury Department and the IRS finalized rules granting an automatic six-month extension of time to file for non pass-through entities and granting certain pass-through entities a five-month automatic extension of time to file certain returns. The five-month extension included in the 2008 final and temporary regulations for certain pass-through entities responded to comments received on the 2005 temporary regulations. Commentators expressed concern that an automatic six-month extension for pass-through entities would unduly burden individual and corporate taxpayers with ownership interests in pass-through entities because individual and corporate taxpayers might not receive information returns from pass-through entities in sufficient time to complete their income tax returns in an accurate and timely manner.

Partnership, Trust, and Estate Taxpayers

Recognizing the inherent conflict between providing sufficient time for pass-through entities to prepare returns and ensuring that the owners and beneficiaries of pass-through entities timely receive information returns needed to file their own returns, the 2008 proposed and temporary regulations specifically requested comments on whether a shorter filing extension period for pass-through entities might increase or reduce overall taxpayer burden. The IRS received approximately 70 comments, many of which are summarized in this preamble.

Several commentators suggested that the Treasury Department and the IRS should consider changing the filing and extension due dates for individual and corporate tax returns rather than shortening the extension period for pass-through entities. For example, some commentators suggested moving the individual taxpayer return due date to April 30th, or allowing individuals and corporations a seven-month extension of time to file returns. Other commentators suggested moving up the filing date for partnership, trust, and estate taxpayers to March 15th, thereby allowing these entities a full six-month extension of time to file until September 15th so that individual taxpayers with ownership interests in the entities would receive information timely.

These suggestions are not viable options for a regulation project because the due dates for filing tax returns are determined by statute. *See,* for example, sections 6012(a) and 6072. Further, section 6081 provides that, except in the case of taxpayers who are abroad, the maximum extension of time to file a tax return cannot exceed six months. Accordingly, without legislative action, the Treasury Department and the IRS cannot change the due date for filing tax returns or increase the maximum extension of time to file a tax return for pass-through entities, individuals, or corporations.

Although the comments with regard to shortening the automatic extension period for these pass-through entities varied as to time periods, the majority of commentators agreed that a less than six-month extension period for pass-through entities would generally reduce overall taxpayer burden by allowing taxpayers with ownership interests in pass-through entities to receive information in a more timely fashion vis-à-vis preparation of their own individual or corporate income tax returns. There was no clear consensus, however, regarding what the optimal period of extension would be for reducing taxpayer burden.

The Treasury Department and the IRS considered several extension periods for pass-through entities, including a four-month and a five-month extension period, when drafting the proposed and temporary regulations. The Treasury Department and the IRS ultimately decided upon a five-month automatic extension period for the proposed and temporary regulations. Many comments were received supporting the five-month extension period. Some commentators noted, however, that the five-month extension period would not alleviate the burden on corporate taxpayers with ownership interests in pass-through entities. These commentators expressed a concern that even a five-month extension period for these entities would, in most cases, simply align the extended due date for pass-through entities with the extended due date for corporate returns, resulting in the same delay of information to corporate owners of these entities. That delay, the commentators contend, would greatly increase the need for filing amended returns. Commentators suggested shortening the automatic extension for these entities to less than five months.

In opting for the five-month extension, the Treasury Department and the IRS recognize that some corporations with ownership interests in pass-through entities may continue to experience delayed receipt of information needed to complete their own corporate returns. The Treasury Department and the IRS, however, continue to believe that a five-month extension period reduces the overall burden on taxpayers and strikes the most reasonable balance for all affected taxpayers. The five-month extension period allows pass-through entities, including complex and tiered entities, an adequate time for preparation of the

required pass-through returns and also ensures the timely and accurate dissemination of information to a large number of taxpayers who require that information for completion of their own income tax returns.

Electing large partnerships required to file Form 1065–B, ''U.S. Return of Income for Electing Large Partnerships,'' for any taxable year will be allowed an automatic six-month extension of time to file the return, however, because these pass-through entities are statutorily required to furnish Schedules K–1 by March 15, regardless of any extension of time to file the return. *See* section 6031(b).

Comments varied in response to the five-month automatic filing extension period provided for trust taxpayers. Several commentators expressed support of the overall five-month extension to pass-through entities. Other commentators suggested that trusts resemble an end taxpayer more than a pass-through entity, and in that respect are more akin to individuals than to partnerships. These commentators argued that trusts did not belong in the same class of entities as partnerships and estates for purposes of automatic filing extensions.

Some commentators further expressed concern that Schedules K–1 would not be received by trusts in a sufficiently timely fashion. For example, commenters noted that trusts are often invested in partnerships, which are often invested in other partnerships in tiered structures, with each entity relying on the next for information before preparing their own statements. These commenters feared that, due to the compressed timeframe when Forms 1065, ''U.S. Return of Partnership Income,'' will typically be prepared, Schedules K–1 received by each succeeding entity in the chain ultimately will be received by trusts at the very last minute, resulting in inaccuracies and increased preparer burden.

Commentators also pointed out that the five-month extended deadline for trusts would coincide with the extended due date for S Corporation tax returns. Due to the fact that many trusts are invested in S Corporations, these commentators viewed this as an increased burden on trusts and their return preparers.

The Treasury Department and the IRS recognize that only allowing a five-month extension of time to file for trusts may cause a hardship, as some trusts may have less time to complete accurate income tax returns and to provide timely information to the trust's beneficiaries. Providing a longer extension of time to file, however, still presents the potential of shifting the burden to individuals who might not receive timely information. In addition, the Treasury Department and the IRS believe that the five-month automatic filing extension period has generally been successful and continues to strike the right balance in reducing overall taxpayer burden since the proposed and temporary regulations were adopted.

Therefore, after thorough consideration of all the comments, the Treasury Department and the IRS determined that the five-month extension period best reduces overall tax burden. Accordingly, these final regulations provide that trusts will continue to receive an automatic five month extension of time to file as provided in the proposed and temporary regulations.

Finally, a comment questioned whether the five-month automatic extension of time to file estate or trust income tax returns applies to individuals filing bankruptcy petitions under chapter 7 or 11 of title 11 of the United States Code. The bankruptcy estate created when a petition is filed by an individual under either chapter 7 or 11 is a separate taxable entity for title 26 purposes. *See* 26 U.S.C. 1398. Although fiduciaries of these individual bankruptcy estates (trustees or debtors-in-possession) may be required to file Forms 1041, the bankruptcy estates are not pass-through entities as described in these regulations. Therefore, the five-month automatic extension provided by these regulations is inapplicable to bankruptcy estates of individuals under chapter 7 or 11 of title 11 of the Bankruptcy Code.

Pass-through entities eligible to file bankruptcy petitions, such as partnerships, would be affected by these regulations. A separate taxable entity is not created when a partnership files a bankruptcy case. *See generally* 26 U.S.C. § 1399. The trustee or debtor-in-possession of the bankrupt partnership files a Form 1065, not a Form 1041. Thus, the five-month automatic extension provided in these regulations would apply, as the filing of a bankruptcy petition does not change the information reporting requirements of pass-through entities, such as a partnership.

Accordingly, after consideration of all comments and in order to best minimize overall taxpayer burden, these final regulations provide for a five-month automatic extension of time to file certain returns for partnerships, trusts, and estates other than certain bankruptcy estates.

Pension Excise Taxes

These final regulations also adopt without modification the proposed amendments to 26 CFR part 54, which allow filers of Form 8928, ''Return of Certain Excise Taxes Under Chapter 43 of the Internal Revenue Code,'' to obtain an automatic six-month extension of time to file the return after the date prescribed for filing the return.

Special Analyses

It has been determined that this Treasury Decision is not a significant regulatory action as defined in Executive Order 12866. Therefore, a regulatory assessment is not required. It also has been determined that section 553(b) of the Administrative Procedure Act (5 U.S.C. chapter 5) does not apply to these regulations. Although these final regulations reference forms that are approved under the Paperwork Reduction Act (44 U.S.C. chapter 35), the regulations themselves do not impose a collection of information on small entities. Therefore, the Regulatory Flexibility Act (5 U.S.C. chapter 6) does not apply. Pursuant to section 7805(f) of the Internal Revenue Code, the notice of proposed rulemaking preceding this regulation was submitted to the Chief Counsel for Advocacy of the Small Business Administration for comment on its impact on small businesses.

Drafting Information

The principal author of these regulations is Jason Bremer of the Office of the Associate Chief Counsel (Procedure and Administration).

List of Subjects

26 CFR Part 1

Income taxes, Reporting and recordkeeping requirements.

26 CFR Part 54

Pension excise taxes, Reporting and recordkeeping requirements.

Adoption of Amendments to the Regulations

Accordingly, 26 CFR parts 1 and 54 are amended as follows:

PART 1—INCOME TAXES

■ **Paragraph 1.** The authority citation for part 1 is amended by adding entries in numerical order to read in part as follows:

Authority: 26 U.S.C. 7805 * * *

Section 1.6081–2 also issued under 26 U.S.C. 6081. * * *

Section 1.6081–6 also issued under 26 U.S.C. 6081. * * *

■ **Par. 2.** Section 1.6081–2 is added to read as follows:

§ 1.6081–2 Automatic extension of time to file certain returns filed by partnerships.

(a) *In general.* (1) A partnership required to file Form 1065, ''U.S. Partnership Return of Income,'' or Form 8804, ''Annual Return for Partnership Withholding Tax,'' for any taxable year will be allowed an automatic 5-month extension of time to file the return after the date prescribed for filing the return if the partnership files an application under this section in accordance with paragraph (b) of this section. No additional extension will be allowed pursuant to § 1.6081–1(b) beyond the automatic 5-month extension provided by this section. In the case of a partnership described in § 1.6081–5(a)(1), the automatic extension of time to file allowed under this section runs concurrently with an extension of time to file granted pursuant to § 1.6081–5.

(2) An electing large partnership (ELP) required to file Form 1065–B, ''U.S. Return of Income for Electing Large Partnerships,'' for any taxable year will be allowed an automatic 6-month extension of time to file the return after the date prescribed for filing the return if the partnership files an application under this section in accordance with paragraph (b) of this section.

(b) *Requirements.* To satisfy this paragraph (b), the partnership must—

(1) Submit a complete application on Form 7004, ''Application for Automatic Extension of Time to File Certain Business Income Tax, Information, and Other Returns,'' or in any other manner prescribed by the Commissioner;

(2) File the application on or before the later of—

(i) The date prescribed for filing the return of the partnership; or

(ii) The expiration of any extension of time to file granted under § 1.6081–5(a); and

(3) File the application with the Internal Revenue Service office designated in the application's instructions.

(c) *Payment of section 7519 amount.* An automatic extension of time for filing a partnership return of income granted under paragraph (a) of this section does not extend the time for payment of any amount due under section 7519, relating to required payments for entities electing not to have a required taxable year.

(d) *Section 444 election.* An automatic extension of time for filing a partnership return of income will run concurrently with any extension of time for filing a return allowed because of section 444, relating to the election of a taxable year other than a required taxable year.

(e) *Effect of extension on partner.* An automatic extension of time for filing a partnership return of income under this section does not extend the time for filing a partner's income tax return or the time for the payment of any tax due on a partner's income tax return.

(f) *Termination of automatic extension.* The Commissioner may terminate an automatic extension at any time by mailing to the partnership a notice of termination at least 10 days prior to the termination date designated in such notice. The Commissioner must mail the notice of termination to the address shown on the Form 7004 or to the partnership's last known address. For further guidance regarding the definition of last known address, *see* § 301.6212–2 of this chapter.

(g) *Penalties.* See section 6698 for failure to file a partnership return.

(h) *Effective/applicability dates.* This section applies to applications for an automatic extension of time to file the partnership returns listed in paragraph (a) of this section filed on or after June 24, 2011.

§ 1.6081–2T [Removed]

■ **Par. 3.** Section 1.6081–2T is removed.

■ **Par. 4.** Section 1.6081–6 is added to read as follows:

§ 1.6081–6 Automatic extension of time to file estate or trust income tax return.

(a) *In general.* (1) Except as provided in paragraph (a)(2) of this section, any estate, including but not limited to an estate defined in section 2031, or trust required to file an income tax return on Form 1041, ''U.S. Income Tax Return for Estates and Trusts,'' will be allowed an automatic 5-month extension of time to file the return after the date prescribed for filing the return if the estate or trust files an application under this section in accordance with paragraph (b) of this section. No additional extension will be allowed pursuant to § 1.6081–1(b) beyond the automatic 5-month extension provided by this section.

(2) A bankruptcy estate that is created when an individual debtor files a petition under either chapter 7 or chapter 11 of Title 11 of the U.S. Code that is required to file an income tax return on Form 1041, ''U.S. Income Tax Return for Estates and Trusts,'' and an estate or trust required to file an income tax return on Form 1041–N, ''U.S. Income Tax Return for Electing Alaska Native Settlement,'' or Form 1041–QFT, ''U.S. Income Tax Return for Qualified Funeral Trusts'' for any taxable year will be allowed an automatic 6-month extension of time to file the return after the date prescribed for filing the return if the estate files an application under this section in accordance with paragraph (b) of this section.

(b) *Requirements.* To satisfy this paragraph (b), an estate or trust must—

(1) Submit a complete application on Form 7004, ''Application for Automatic Extension of Time to File Certain Business Income Tax, Information, and Other Returns,'' or in any other manner prescribed by the Commissioner;

(2) File the application on or before the date prescribed for filing the return with the Internal Revenue Service office designated in the application's instructions; and

(3) Show the amount properly estimated as tax for the estate or trust for the taxable year.

(c) *No extension of time for the payment of tax.* An automatic extension of time for filing a return granted under paragraph (a) of this section will not extend the time for payment of any tax due on such return.

(d) *Effect of extension on beneficiary.* An automatic extension of time to file an estate or trust income tax return under this section will not extend the time for filing the income tax return of a beneficiary of the estate or trust or the time for the payment of any tax due on the beneficiary's income tax return.

(e) *Termination of automatic extension.* The Commissioner may terminate an automatic extension at any time by mailing to the estate or trust a notice of termination at least 10 days prior to the termination date designated in such notice. The Commissioner must mail the notice of termination to the address shown on the Form 7004 or to the estate or trust's last known address. For further guidance regarding the definition of last known address, *see* § 301.6212–2 of this chapter.

(f) *Penalties.* See section 6651 for failure to file an estate or trust income tax return or failure to pay the amount shown as tax on the return.

(g) *Effective/applicability dates.* This section applies to applications for an automatic extension of time to file an estate or trust income tax return filed on or after June 24, 2011.

§ 1.6081–6T [Removed]

■ **Par. 5.** Section 1.6081–6T is removed.

PART 54—PENSION EXCISE TAXES

■ **Par. 6.** The authority citation for part 54 is amended by adding an entry in numerical order to read in part as follows:

Authority: 26 U.S.C. 7805 * * *

Section 54.6081–1 also issued under 26 U.S.C. 6081(a).

■ **Par. 7.** Section 54.6081–1 is added to read as follows:

§ 54.6081–1 Automatic extension of time for filing returns for certain excise taxes under Chapter 43.

(a) *In general.* An employer, other person or health plan that is required to file a return on Form 8928, ''Return of Certain Excise Taxes Under Chapter 43 of the Internal Revenue Code,'' will be allowed an automatic 6-month extension of time to file the return after the date prescribed for filing the return if the employer, other person or health plan files an application under this section in accordance with paragraph (b) of this section.

(b) *Requirements.* To satisfy this paragraph (b), an employer, other person or health plan must—

(1) Submit a complete application on Form 7004, ''Application for Automatic Extension of Time To File Certain Business Income Tax, Information, and Other Returns,'' or in any other manner prescribed by the Commissioner;

(2) File the application on or before the date prescribed for filing the return with the Internal Revenue Service office designated in the application's instructions; and

(3) Remit the amount of the properly estimated unpaid tax liability on or before the date prescribed for payment.

(c) *No extension of time for the payment of tax.* An automatic extension of time for filing a return granted under paragraph (a) of this section will not extend the time for payment of any tax due on such return.

(d) *Termination of automatic extension.* The Commissioner may terminate an automatic extension at any time by mailing to the employer, other person, or health plan a notice of termination at least 10 days prior to the termination date designated in such notice. The Commissioner must mail the notice of termination to the address shown on the Form 7004 or to the estate or trust's last known address. For further guidance regarding the definition of last known address, *see* § 301.6212–2 of this chapter.

(e) *Penalties. See* section 6651 for failure to file a pension excise tax return or failure to pay the amount shown as tax on the return.

(f) *Effective/applicability date.* This section is applicable for applications for an automatic extension of time to file a return due under chapter 43, filed on or after June 24, 2011.

Steven T. Miller,

Deputy Commissioner for Services and Enforcement.

Approved: June 17, 2011.

Emily S. McMahon,

Acting Assistant Secretary of the Treasury (Tax Policy).

[FR Doc. 2011–15902 Filed 6–23–11; 8:45 am]

BILLING CODE 4830–01–P

DEPARTMENT OF THE TREASURY

Financial Crimes Enforcement Network

31 CFR Part 1010

RIN 1506–AB08

Amendment to the Bank Secrecy Act Regulations—Reports of Foreign Financial Accounts; Correction

AGENCY: Financial Crimes Enforcement Network, Treasury (''FinCEN''), Treasury.

ACTION: Correcting amendment.

SUMMARY: This document corrects a minor typographical error appearing in the final rule published in the Federal Register of February 24, 2011.

DATES: Effective on June 24, 2011.

FOR FURTHER INFORMATION CONTACT: Regulatory Policy and Programs Division, FinCEN, (800–949–2732).

SUPPLEMENTARY INFORMATION: In rule FR Doc. 2011–4048, published on February 24, 2011 (76 FR 10234), on page 10245, in the third column, in line 16, 31 CFR 1010.350(d), the citation to ''31 CFR 1010(hhh)'' should have read ''31 CFR 1010.100(hhh).'' This document corrects the citation.

Because this document is correcting a minor typographical error, FinCEN finds that prior notice and comment under the Administrative Procedure Act are unnecessary.

List of Subjects in 31 CFR Part 1010

Administrative practice and procedure, Banks, Banking, Brokers, Currency, Foreign banking, Foreign currencies, Gambling, Investigations, Penalties, Reporting and recordkeeping requirements, Securities, Terrorism.

Accordingly, 31 CFR part 1010 is corrected by making the following correcting amendment:

PART 1010—GENERAL PROVISIONS

■ 1. The authority citation for part 1010 continues to read as follows:

Authority: 12 U.S.C. 1829b and 1951–1959; 31 U.S.C. 5311–5314 and 5316–5332; title III, sec. 314, Pub. L. 107–56, 115 Stat. 307.

■ 2. In § 1010.350, paragraph (d) is revised to read as follows:

§ 1010.350 Reports of foreign financial accounts.

* * * * *

(d) *Foreign country.* A foreign country includes all geographical areas located outside of the United States as defined in 31 CFR 1010.100(hhh).

* * * * *

Dated: June 21, 2011.

Charles M. Steele,

Deputy Director, Financial Crimes Enforcement Network.

[FR Doc. 2011–15900 Filed 6–23–11; 8:45 am]

BILLING CODE 4810–02–P

DEPARTMENT OF HOMELAND SECURITY

Coast Guard

33 CFR Part 100

[Docket No. USCG–2011–0452]

Seattle Seafair Unlimited Hydroplane Race

AGENCY: Coast Guard, DHS.

ACTION: Notice of enforcement of regulation.

SUMMARY: The Coast Guard will enforce the Seattle Seafair Unlimited Hydroplane Race Special Local Regulation on Lake Washington, WA from 8:00 a.m. on August 4, 2011 through 11:59 p.m. on August 7, 2011 during hydroplane race times. This action is necessary to ensure public safety from the inherent dangers associated with high-speed races while allowing access for rescue personnel in the event of an emergency. During the enforcement period, no person or vessel will be allowed to enter the regulated area without the permission of the Captain of the Port, on-scene Patrol Commander or Designated Representative.

DATES: The regulations at 33 CFR 100.1301 will be enforced from 8 a.m. on August 4, 2011 through 11:59 p.m. on August 7, 2011.

FOR FURTHER INFORMATION CONTACT: If you have questions on this notice, call or e-mail Ensign Anthony P. LaBoy, Sector Puget Sound Waterways Management Division, Coast Guard; telephone 206–217–6323, e-mail *SectorPugetSoundWWM@uscg.mil.*

SUPPLEMENTARY INFORMATION: The Coast Guard will enforce the special local

regulation for the annual Seattle Seafair Unlimited Hydroplane Race in 33 CFR 100.1301 from 8 a.m. on August 4, 2011 through 11:59 p.m. on August 7, 2011.

Under the provisions of 33 CFR 100.1301, the Coast Guard will restrict general navigation in the following area; the waters of Lake Washington bounded by the Interstate 90 (Mercer Island/Lacey V. Murrow) Bridge, the western shore of Lake Washington, and the east/west line drawn tangent to Bailey Peninsula and along the shoreline of Mercer Island.

The regulated area has been divided into two zones. The zones are separated by a line perpendicular from the I–90 Bridge to the northwest corner of the East log boom and a line extending from the southeast corner of the East log boom to the southeast corner of the hydroplane race course and then to the northerly tip of Ohlers Island in Andrews Bay. The western zone is designated Zone I, the eastern zone, Zone II. (Refer to NOAA Chart 18447).

The Coast Guard will maintain a patrol consisting of Coast Guard vessels, assisted by Auxiliary Coast Guard vessels, in Zone II. The Coast Guard patrol of this area is under the direction of the Coast Guard Patrol Commander (the ''Patrol Commander''). The Patrol Commander is empowered to control the movement of vessels on the racecourse and in the adjoining waters during the periods this regulation is in effect. The Patrol Commander may be assisted by other federal, state and local law enforcement agencies.

Only authorized vessels may be allowed to enter Zone I during the hours this regulation is in effect. Vessels in the vicinity of Zone I shall maneuver and anchor as directed by Coast Guard Officers or Petty Officers.

During the times in which this regulation is in effect, the following rules shall apply:

(1) Swimming, wading, or otherwise entering the water in Zone I by any person is prohibited while hydroplane boats are on the racecourse. At other times in Zone I, any person entering the water from the shoreline shall remain west of the swim line, denoted by buoys, and any person entering the water from the log boom shall remain within ten (10) feet of the log boom.

(2) Any person swimming or otherwise entering the water in Zone II shall remain within ten (10) feet of a vessel.

(3) Rafting to a log boom will be limited to groups of three vessels.

(4) Up to six (6) vessels may raft together in Zone II if none of the vessels are secured to a log boom. Only vessels authorized by the Patrol Commander, other law enforcement agencies or event sponsors shall be permitted to tow other watercraft or inflatable devices.

(5) Vessels proceeding in either Zone I or Zone II during the hours this regulation is in effect shall do so only at speeds which will create minimum wake, seven (07) miles per hour or less. This maximum speed may be reduced at the discretion of the Patrol Commander.

(6) Upon completion of the daily racing activities, all vessels leaving either Zone I or Zone II shall proceed at speeds of seven (07) miles per hour or less. The maximum speed may be reduced at the discretion of the Patrol Commander.

(7) A succession of sharp, short signals by whistle or horn from vessels patrolling the areas under the direction of the Patrol Commander shall serve as signal to stop. Vessels signaled shall stop and shall comply with the orders of the patrol vessel; failure to do so may result in expulsion from the area, citation for failure to comply, or both.

The Coast Guard may be assisted by other Federal, State, or local law enforcement agencies in enforcing this regulation.

This notice is issued under authority of 33 CFR 100.1301 and 5 U.S.C. 552(a). If the Captain of the Port determines that the regulated area need not be enforced for the full duration stated in this notice, he or she may use a Broadcast Notice to Mariners to grant general permission to enter the regulated area.

Dated: May 25, 2011.

S.J. Ferguson,

Captain, U.S. Coast Guard, Captain of the Port, Puget Sound.

[FR Doc. 2011–15791 Filed 6–23–11; 8:45 am]

BILLING CODE 9110–04–P

DEPARTMENT OF HOMELAND SECURITY

Coast Guard

33 CFR Part 117

[Docket No. USCG–2011–0503]

Drawbridge Operation Regulation; New Jersey Intracoastal Waterway (NJICW), Atlantic City, NJ

AGENCY: Coast Guard, DHS.

ACTION: Notice of temporary deviation from regulations.

SUMMARY: The Commander, Fifth Coast Guard District, has issued a temporary deviation from the regulation governing the operation of the Route 30/Abescon Boulevard Bridge across Beach Thorofare, NJICW mile 67.2, at Atlantic City, NJ. The deviation allows the bridge to remain in the closed position to vessels requiring an opening to accommodate heavy volumes of vehicular traffic due to the Fourth of July fireworks show.

DATES: This deviation is effective from 9:40 p.m. on July 4, 2011 through 11:15 p.m. on July 5, 2011.

ADDRESSES: Documents mentioned in this preamble as being available in the docket are part of docket USCG–2011–0503 and are available online by going to *http://www.regulations.gov,* inserting USCG–2011–0503 in the ''Keyword'' box and then clicking ''Search.'' They are also available for inspection or copying at the Docket Management Facility (M–30), U.S. Department of Transportation, West Building Ground Floor, Room W12–140, 1200 New Jersey Avenue, SE., Washington, DC 20590, between 9 a.m. and 5 p.m., Monday through Friday, except Federal holidays.

FOR FURTHER INFORMATION CONTACT: If you have questions on this rule, call or e-mail Lindsey Middleton, Coast Guard; telephone 757–398–6629, e-mail *Lindsey.R.Middleton@uscg.mil.* If you have questions on viewing the docket, call Renee V. Wright, Program Manager, Docket Operations, telephone 202–366–9826.

SUPPLEMENTARY INFORMATION: The Borgata Hotel Casino and Spa, on behalf of New Jersey Department of Transportation, requested a temporary deviation from the current operating regulations of the Route 30/Absecon Boulevard Bridge across Beach Thorofare, NJICW mile 67.2, at Atlantic City, NJ.

The closure has been requested to ensure the safety of the heavy volumes of vehicular traffic that would be transiting over the bridge for the July 4th fireworks show at Borgata Hotel Casino and Spa. Under this temporary deviation, the bridge will remain in the closed position to vessels requiring an opening in order to facilitate the movement of vehicular traffic intending to view the Fourth of July fireworks show.

The Fourth of July fireworks show is scheduled to take place on July 4, 2011. Therefore, under this temporary deviation, the bridge will remain in the closed position to vessels requiring an opening from 9:40 p.m. through 11:15 p.m. on July 4, 2011. However, should weather preclude this event from taking place on July 4, 2011, the event will be re-scheduled to take place on July 5, 2011. In that case, the bridge will operate as normal on July 4, 2011 and the bridge will remain in the closed position to vessels requiring an opening

from 9:40 p.m. through 11:15 p.m. on July 5, 2011. At all other times during the effective period of this temporary regulation, the bridge will operate as outlined at 33 CFR 117.733(e).

The vertical clearance of this bascule bridge is 20 feet above mean high water in the closed position to vessels and unlimited in the open position. The current operating regulations are outlined at 33 CFR 117.733(e), which require that the bridge shall open on signal but only if at least four hours of notice is given; except that from April 1 through October 31, from 7 a.m. to 11 p.m., the draw need only open on the hour. The majority of the vessels that transit this bridge during this time are recreational boats. Vessels able to pass through the bridge in the closed position may do so at any time. The bridge will be able to open for emergencies. The Atlantic Ocean is an alternate route for vessels with mast heights greater than 20 feet. The Coast Guard will inform the users of the waterway through our Local and Broadcast Notices to Mariners of the closure period so that vessels can plan their transits to minimize any impact caused by the temporary deviation.

In accordance with 33 CFR 117.35(e), the drawbridge must return to its regular operating schedule immediately at the end of the designated time period. This deviation from the operating regulations is authorized under 33 CFR 117.35.

Dated: June 15, 2011.

Waverly W. Gregory, Jr.,

Bridge Program Manager, By direction of the Commander, Fifth Coast Guard District.

[FR Doc. 2011–15802 Filed 6–23–11; 8:45 am]

BILLING CODE 9110–04–P

DEPARTMENT OF HOMELAND SECURITY

Coast Guard

33 CFR Part 117

[Docket No. USCG–2011–0529]

Drawbridge Operation Regulation; Delaware River, Between Burlington, NJ and Bristol, PA

AGENCY: Coast Guard, DHS.

ACTION: Notice of temporary deviation from regulations.

SUMMARY: The Commander, Fifth Coast Guard District has issued a temporary deviation from the regulations governing the operation of the Burlington-Bristol Bridge on Route 413, across the Delaware River, at mile 117.8, between Burlington, NJ and Bristol, PA. The deviation restricts the operation of the draw span in order to facilitate the replacement of the operating lift cables.

DATES: This deviation is effective from 12:01 a.m. July 9, 2011, until 11:59 p.m. July 22, 2011.

ADDRESSES: Documents mentioned in this preamble as being available in the docket are part of docket USCG–2011–0529 and are available online by going to *http://www.regulations.gov,* inserting USCG–2011–0529 in the ''Keyword'' box and then clicking ''Search''. They are also available for inspection or copying at the Docket Management Facility (M–30), U.S. Department of Transportation, West Building Ground Floor, Room W12–140, 1200 New Jersey Avenue, SE., Washington, DC 20590, between 9 a.m. and 5 p.m., Monday through Friday, except Federal holidays.

FOR FURTHER INFORMATION CONTACT: If you have questions on this rule, call or e-mail Terrance Knowles, Environmental Protection Specialist, Fifth Coast Guard District, at telephone 757–398–6587, e-mail *Terrance.A.Knowles@uscg.mil.* If you have questions on viewing the docket, call Renee V. Wright, Program Manager, Docket Operations, telephone 202–366–9826.

SUPPLEMENTARY INFORMATION: The Burlington County Bridge Commission, who owns and operates this vertical-lift type drawbridge, has requested a temporary deviation from the current operating regulations set out in 33 CFR 117.5 and 117.716(b) to facilitate the replacement of the lift cables.

The Burlington-Bristol Bridge on Route 413, at mile 117.8, across the Delaware River, between Burlington NJ and Bristol PA, has a vertical clearance in the closed position to vessels of 62 feet above mean high water.

Under the regular operating schedule the bridge opens on signal as required by 33 CFR 117.5 and the opening of a bridge may not be delayed more than five minutes for a highway bridge, after the signal to open is given as required by 33 CFR 117.716(b).

Under this temporary deviation, beginning 12:01 a.m. on Saturday July 9, 2011 and ending at 11:59 p.m. on Friday July 22, 2011, the Burlington-Bristol Bridge will be closed to vessels and unable to open on signal.

Vessels that can pass under the bridge without a drawbridge opening may do so at all times. A barge/crane, involved in the maintenance operation, will be located near the center of the channel, adjacent to the bridge, reducing the horizontal clearance of the waterway to approximately 200 feet. on either side of the barge/crane. Vessels able to pass under the closed span in conjunction with this horizontal clearance may do so at any time. There are no alternate routes for vessels transiting this section of the Delaware River.

There are approximately four to six vessels per week from four facilities whose vertical clearance surpasses the closed bridge position, requiring an opening of the draw span. The Coast Guard has coordinated this replacement work with the Mariners Advisory Committee for Bay & River Delaware, and will inform the other users of the waterway through our Local and Broadcast Notices to Mariners of the closure periods for the bridge so that vessels can arrange their transits to minimize any impact caused by the temporary deviation. The bridge will not be able to open in an emergency due to the lift cables being removed.

In accordance with 33 CFR 117.35(e), the drawbridge must return to its regular operating schedule immediately at the end of the designated time period. This deviation from the operating regulations is authorized under 33 CFR 117.35.

Dated: June 15, 2011.

Waverly W. Gregory, Jr.,

Bridge Program Manager, By direction of the Commander, Fifth Coast Guard District.

[FR Doc. 2011–15803 Filed 6–23–11; 8:45 am]

BILLING CODE 4910–15–P

DEPARTMENT OF HOMELAND SECURITY

Coast Guard

33 CFR Part 165

[Docket No. USCG–2011–0475]

RIN 1625–AA00

Safety Zone; Central Astoria Independence Celebration Fireworks Event, Wards Island, NY

AGENCY: Coast Guard, DHS.

ACTION: Temporary final rule.

SUMMARY: The Coast Guard is establishing a temporary safety zone in the Captain of the Port (COTP) Zone New York on a portion of the navigable waters of the East River in the vicinity of Wards Island, New York for a fireworks display. This temporary safety zone is necessary to ensure the safety of vessels and spectators from hazards associated with fireworks displays. Persons and vessels are prohibited from entering into, transiting through, mooring, or anchoring within the temporary safety zone unless authorized by the COTP New York or the designated on-scene representative.

DATES: This rule is effective from 8:45 p.m. until 10:15 p.m. on June 30, 2011.

ADDRESSES: Documents indicated in this preamble as being available in the docket are part of docket USCG–2011–4075 and are available online by going to *http://www.regulations.gov,* inserting USCG–2011–4075 in the ''Keyword'' box, and then clicking ''Search.'' They are also available for inspection or copying at the Docket Management Facility (M–30), U.S. Department of Transportation, West Building Ground Floor, Room W12–140, 1200 New Jersey Avenue, SE., Washington, DC 20590, between 9 a.m. and 5 p.m., Monday through Friday, except Federal holidays.

FOR FURTHER INFORMATION CONTACT: If you have questions on this temporary rule, call or e-mail LTJG Eunice James, Coast Guard Sector New York Waterways Management Division; 718–354–4163, e-mail *Eunice.A.James@uscg.mil.* If you have questions on viewing the docket, call Renee V. Wright, Program Manager, Docket Operations, telephone 202–366–9826.

SUPPLEMENTARY INFORMATION:

Regulatory Information

The Coast Guard is issuing this temporary final rule without prior notice and opportunity to comment pursuant to authority under section 4(a) of the Administrative Procedure Act (APA) (5 U.S.C. 553(b)). This provision authorizes an agency to issue a rule without prior notice and opportunity to comment when the agency for good cause finds that those procedures are ''impracticable, unnecessary, or contrary to the public interest.'' Under 5 U.S.C. 553(b)(B), the Coast Guard finds that good cause exists for not publishing a notice of proposed rulemaking (NPRM) with respect to this rule because the Coast Guard did not receive information regarding the dates and scope of the event in time to publish a NPRM followed by a final rule before the effective date.

The Coast Guard was notified of this event on February 24, 2011. This event is a reoccurring marine event with a proposed permanent rule currently in a public comment period under docket number USCG–2010–1001 titled, Special Local Regulations and Safety Zones; Recurring Events in Captain of the Port New York Zone.

The sponsor was not aware of the requirements for submitting an application for a marine event 135 days in advance, resulting in a late notification to the Coast Guard. The sponsor is aware of this requirement for all future events. The sponsor is unable to reschedule this event due to other activities being held in conjunction with the fireworks display.

Due to the dangers posed by the pyrotechnics used in this fireworks display, the safety zone is necessary to provide for the safety of event participants, spectator craft, and other vessels operating near the event area. For the safety concerns noted, it is in the public interest to have these regulations in effect during the event.

Under 5 U.S.C. 553(d)(3), the Coast Guard finds that good cause exists for making this rule effective less than 30 days after publication in the **Federal Register.** The rule must become effective on the date specified above in order to provide for the safety of the public including spectators and vessels operating in the area near the fireworks display. Delaying the effective date of this rule until after 30 days have elapsed since publication is impractical and would expose spectators, vessels, and other property to the hazards associated with pyrotechnics used in the fireworks display.

Basis and Purpose

The legal basis for the temporary rule is 33 U.S.C. 1226, 1231, 46 U.S.C. Chapter 701, 3306, 3703; 50 U.S.C. 191, 195; Pub. L. 107–295, 116 Stat. 2064; and Department of Homeland Security Delegation No. 0170.1, which collectively authorize the Coast Guard to define safety zones.

The Central Astoria Local Development Coalition has planned a fireworks event to celebrate Independence Day. The fireworks will commence at 9:15 p.m. on June 30, 2011 and will last approximately 25 minutes. This event poses significant potential risk to participants, spectators and the maritime public because of hazardous conditions associated with a fireworks display. This temporary safety zone is necessary to ensure the safety of participants, spectators and vessels.

Discussion of Rule

This rule establishes a temporary safety zone on a portion of the waters of the East River. The temporary safety zone will encompass all waters of the East River in the vicinity of Wards Island, Queens, NY, within a 150-yard radius of a shore location, approximate position 40°46′57.83″ N, 073°55′28.58″ W (NAD 83) approximately 150 yards south of Hells Gate Bridge.

All persons and vessels shall comply with the instructions of the COTP New York or the designated on-scene representative. Entry into, transiting, or anchoring within the temporary safety zone is prohibited unless authorized by the COTP New York or the designated on-scene representative. The COTP New York or the designated representative may be reached on VFH Channel 16.

Regulatory Analyses

We developed this rule after considering numerous statutes and executive orders related to rulemaking. Below we summarize our analyses based on 13 of these statutes or executive orders.

Executive Order 12866 and Executive Order 13563

This rule is not a significant regulatory action under section 3(f) of Executive Order 12866, Regulatory Planning and Review, as supplemented by Executive Order 13563, and does not require an assessment of potential costs and benefits under section 6(a)(3) of that Order. The Office of Management and Budget has not reviewed it under that Order.

The Coast Guard's implementation of this temporary safety zone will be of short duration and designed to minimize the impact to vessel traffic on navigable waters. This safety zone will only be enforced for 90 minutes. Furthermore, vessels may be authorized to transit the zone with permission of the COTP New York or the designated on-scene representative.

Small Entities

Under the Regulatory Flexibility Act (5 U.S.C. 601–612), we have considered whether this rule would have a significant economic impact on a substantial number of small entities. The term ''small entities'' comprises small businesses, not-for-profit organizations that are independently owned and operated and are not dominant in their fields, and governmental jurisdictions with populations of less than 50,000.

The Coast Guard certifies under 5 U.S.C. 605(b) that this rule will not have a significant economic impact on a substantial number of small entities.

This rule will affect the following entities, some of which may be small entities: The owners and operators of vessels intending to transit or anchor within the fireworks fall-out zone, a portion of the East River in the vicinity of Wards Island, Queens, NY. The fireworks will commence at 9:15 p.m. on June 30, 2011 and will last approximately 25 minutes.

This rule will not have a significant economic impact on a substantial number of small entities for the following reasons: Vessel traffic can safely transit around the zone. Before the effective period, we will issue

maritime advisories widely available to users of the waterway. This rule will be in effect for only 90 minutes.

Assistance for Small Entities

Under section 213(a) of the Small Business Regulatory Enforcement Fairness Act of 1996 (Pub. L. 104–121), we offer to assist small entities in understanding the rule so that they can better evaluate its effects on them and participate in the rulemaking process.

Small businesses may send comments on the actions of Federal employees who enforce, or otherwise determine compliance with, Federal regulations to the Small Business and Agriculture Regulatory Enforcement Ombudsman and the Regional Small Business Regulatory Fairness Boards. The Ombudsman evaluates these actions annually and rates each agency's responsiveness to small business. If you wish to comment on actions by employees of the Coast Guard, call 1–888–REG–FAIR (1–888–734–3247). The Coast Guard will not retaliate against small entities that question or complain about this rule or any policy or action of the Coast Guard.

Collection of Information

This rule calls for no new collection of information under the Paperwork Reduction Act of 1995 (44 U.S.C. 3501–3520).

Federalism

A rule has implications for federalism under Executive Order 13132, Federalism, if it has a substantial direct effect on State or local governments and would either preempt State law or impose a substantial direct cost of compliance on them. We have analyzed this rule under that Order and have determined that it does not have implications for federalism.

Unfunded Mandates Reform Act

The Unfunded Mandates Reform Act of 1995 (2 U.S.C. 1531–1538) requires Federal agencies to assess the effects of their discretionary regulatory actions. In particular, the Act addresses actions that may result in the expenditure by a State, local, or tribal government, in the aggregate, or by the private sector of $100,000,000 or more in any one year. Though this rule will not result in such expenditure, we do discuss the effects of this rule elsewhere in this preamble.

Taking of Private Property

This rule will not affect a taking of private property or otherwise have taking implications under Executive Order 12630, Governmental Actions and Interference with Constitutionally Protected Property Rights.

Civil Justice Reform

This rule meets applicable standards in sections 3(a) and 3(b)(2) of Executive Order 12988, Civil Justice Reform, to minimize litigation, eliminate ambiguity, and reduce burden.

Protection of Children

We have analyzed this rule under Executive Order 13045, Protection of Children from Environmental Health Risks and Safety Risks. This rule is not an economically significant rule and does not create an environmental risk to health or risk to safety that may disproportionately affect children.

Indian Tribal Governments

This rule does not have tribal implications under Executive Order 13175, Consultation and Coordination with Indian Tribal Governments, because it does not have a substantial direct effect on one or more Indian tribes, on the relationship between the Federal Government and Indian tribes, or on the distribution of power and responsibilities between the Federal Government and Indian tribes.

Energy Effects

We have analyzed this rule under Executive Order 13211, Actions Concerning Regulations That Significantly Affect Energy Supply, Distribution, or Use. We have determined that it is not a ''significant energy action'' under that order because it is not a ''significant regulatory action'' under Executive Order 12866 and is not likely to have a significant adverse effect on the supply, distribution, or use of energy. The Administrator of the Office of Information and Regulatory Affairs has not designated it as a significant energy action. Therefore, it does not require a Statement of Energy Effects under Executive Order 13211.

Technical Standards

The National Technology Transfer and Advancement Act (NTTAA) (15 U.S.C. 272 note) directs agencies to use voluntary consensus standards in their regulatory activities unless the agency provides Congress, through the Office of Management and Budget, with an explanation of why using these standards would be inconsistent with applicable law or otherwise impractical. Voluntary consensus standards are technical standards (*e.g.,* specifications of materials, performance, design, or operation; test methods; sampling procedures; and related management systems practices) that are developed or adopted by voluntary consensus standards bodies.

This rule does not use technical standards. Therefore, we did not consider the use of voluntary consensus standards.

Environment

We have analyzed this rule under Department of Homeland Security Management Directive 023–01 and Commandant Instruction M16475.lD, which guide the Coast Guard in complying with the National Environmental Policy Act of 1969 (NEPA) (42 U.S.C. 4321–4370f), and have concluded this action is one of a category of actions that do not individually or cumulatively have a significant effect on the human environment. This rule is categorically excluded, under figure 2–1, paragraph (34)(g), of the Instruction. This rule involves the establishment of a temporary safety zone on a portion of the Upper New York Bay during the launching of fireworks.

List of Subjects in 33 CFR Part 165

Harbors, Marine safety, Navigation (water), Reporting and recordkeeping requirements, Security measures, Waterways.

For the reasons discussed in the preamble, the Coast Guard amends 33 CFR Part 165 as follows:

PART 165—REGULATED NAVIGATION AREAS AND LIMITED ACCESS AREAS

■ 1. The authority citation for part 165 continues to read as follows:

Authority: 33 U.S.C. 1226, 1231; 46 U.S.C. Chapter 701, 3306, 3703; 50 U.S.C. 191, 195; Pub. L. 107–295, 116 Stat. 2064; Department of Homeland Security Delegation No. 0170.1.

■ 2. Add § 165.T01–0475 to read as follows:

§ 165.T01–0475 Safety Zone; Central Astoria Independence Celebration Fireworks Event, Wards Island, NY.

(a) *Regulated Area.* The following area is a temporary safety zone: A 150 yard radius around position 40°46′57.83″ N, 073°55′28.58″ W on the shore of Wards Island, Queens, NY.

(b) *Enforcement period.* This section will be enforced from 8:45 p.m. until 10:15 p.m. on June 30, 2011.

(c) *Regulations.*

(1) The general regulations contained in 33 CFR 165.23 apply.

(2) In accordance with the general regulations in § 165.23 of this part, entry into, transit through, mooring or anchoring within this safety zone is prohibited unless authorized by the COTP New York or the designated on-

scene representative. ''Designated on-scene representative'' means any commissioned, warrant, and petty officer of the Coast Guard on board Coast Guard, Coast Guard Auxiliary, and local, state, and federal law enforcement vessels who have been authorized to act on behalf of the COTP New York.

(3) Persons desiring to operate within the safety zone established in this section may contact the COTP New York at telephone number 718–354–4398 or via on-scene patrol personnel on VHF channel 16 to seek permission to do so. If permission is granted, all persons and vessels must still comply with the instructions of the COTP New York or the designated on-scene representative.

Dated: June 8, 2011.

L.L. Fagan,

Captain, U.S. Coast Guard, Captain of the Port New York.

[FR Doc. 2011–15788 Filed 6–23–11; 8:45 am]

BILLING CODE 9110–04–P

DEPARTMENT OF HOMELAND SECURITY

Coast Guard

33 CFR Part 165

[Docket No. USCG–2011–0437]

RIN 1625–AA00

Safety Zone; Fan Pier Yacht Club Fireworks, Boston Harbor, Boston, MA

AGENCY: Coast Guard, DHS.

ACTION: Temporary final rule.

SUMMARY: The Coast Guard is establishing a temporary safety zone within the Sector Boston Captain of the Port (COTP) Zone for the Fan Pier Yacht Club Fireworks display. This safety zone is necessary to provide for the safety of life on navigable waters during the fireworks event. Entering into, transiting through, mooring or anchoring within this zone is prohibited unless authorized by the COTP or the designated on-scene representative.

DATES: This rule is effective and will be enforced from 9:30 p.m. to 10 p.m. on June 30, 2011.

ADDRESSES: Documents indicated in this preamble as being available in the docket are part of docket USCG–2011–0437 and are available online by going to *http://www.regulations.gov,* inserting USCG–2011–0437 in the ''Keyword'' box, and then clicking ''Search.'' They are also available for inspection or copying at the Docket Management Facility (M–30), U.S. Department of Transportation, West Building Ground Floor, Room W12–140, 1200 New Jersey Avenue, SE., Washington, DC 20590, between 9 a.m. and 5 p.m., Monday through Friday, except Federal holidays.

FOR FURTHER INFORMATION CONTACT: If you have questions on this temporary rule, call or e-mail MST1 David Labadie of the Waterways Management Division, U.S. Coast Guard Sector Boston; telephone 617–223–3010, e-mail *david.j.labadie@uscg.mil.* If you have questions on viewing material related to the docket, call Renee V. Wright, Program Manager, Docket Operations, telephone 202–366–9826.

SUPPLEMENTARY INFORMATION:

Regulatory Information

The Coast Guard is issuing this temporary final rule without prior notice and opportunity to comment pursuant to authority under section 4(a) of the Administrative Procedure Act (APA) (5 U.S.C. 553(b)). This provision authorizes an agency to issue a rule without prior notice and opportunity to comment when the agency for good cause finds that those procedures are ''impracticable, unnecessary, or contrary to the public interest.'' Under 5 U.S.C. 553(b)(B), the Coast Guard finds that good cause exists for not publishing a notice of proposed rulemaking (NPRM) with respect to this rule because sufficient information regarding the dates and scope of the event was not received in time to publish a NPRM followed by a final rule as the event would occur before the rulemaking process was complete. The Coast Guard was notified of this event on May 5, 2011. The sponsor was not aware of the requirements for submitting an application for a marine event 135 days in advance, resulting in a late notification to the Coast Guard. The sponsor is aware of this requirement for all future events. The sponsor is unable to reschedule this event due to other activities being held in conjunction with the fireworks display. Due to the dangers posed by the pyrotechnics used in this fireworks display, the safety zone is necessary to provide for the safety of event participants, spectator craft, and other vessels transiting the event area. For the safety concerns noted, it is in the public interest to have these regulations in effect during the event.

Under 5 U.S.C. 553(d)(3), the Coast Guard finds that good cause exists for making this rule effective less than 30 days after publication in the **Federal Register.** Any delay in the effective date of this rule would expose spectators, vessels and other property to the hazards associated with pyrotechnics used in the fireworks display.

Basis and Purpose

The legal basis for the temporary rule is 33 U.S.C. 1226, 1231, 46 U.S.C. Chapter 701, 3306, 3703; 50 U.S.C. 191, 195; Public Law 107–295, 116 Stat. 2064; and Department of Homeland Security Delegation No. 0170.1, which collectively authorize the Coast Guard to define safety zones.

The safety zone is being issued to establish a temporary regulated area in Boston Harbor around the fireworks launch barge during the fireworks display.

Discussion of Rule

This temporary rule is necessary to ensure the safety of spectators, vessels and other property from the hazards associated with fireworks display. The COTP Boston has determined that fireworks displays in close proximity to watercraft and waterfront structures pose a significant risk to public safety and property. Such hazards include obstructions to the waterway that may cause marine casualties and the explosive danger of fireworks and debris falling into the water that may cause death or serious bodily harm. Establishing a safety zone around the location of this fireworks event will help ensure the safety of spectators, vessels and other property and help minimize the associated risks.

The Coast Guard has implemented safety zones for past events and has not received public comments or concerns regarding the impact to waterway traffic from these events.

Regulatory Analyses

We developed this rule after considering numerous statutes and executive orders related to rulemaking. Below we summarize our analyses based on 13 of these statutes or executive orders.

Executive Order 12866 and Executive Order 13563

This rule is not a significant regulatory action under section 3(f) of Executive Order 12866, Regulatory Planning and Review, as supplemented by Executive Order 13563, and does not require an assessment of potential costs and benefits under section 6(a)(3) of that Order. The Office of Management and Budget has not reviewed it under that Order.

The Coast Guard determined that this rule is not a significant regulatory action for the following reasons: The safety zone will be of limited duration and is designed to avoid, to the extent

possible, fishing and recreational boating traffic routes. The fireworks will also be coordinated to ensure there is no interruption of commercial vessel transits.

Small Entities

Under the Regulatory Flexibility Act (5 U.S.C. 601–612), we have considered whether this rule would have a significant economic impact on a substantial number of small entities. The term ''small entities'' comprises small businesses, not-for-profit organizations that are independently owned and operated and are not dominant in their fields, and governmental jurisdictions with populations of less than 50,000.

The Coast Guard certifies under 5 U.S.C. 605(b) that this rule would not have a significant economic impact on a substantial number of small entities.

This rule will affect the following entities, some of which may be small entities: The owners or operators of vessels intending to enter, transit through, moor or anchor in portions of Boston Harbor during a fireworks display.

This rule will not have a significant economic impact on a substantial number of small entities for the following reasons: This rule will only be in effect for ½ hour and vessels will be able to transit around the safety zone. The fireworks will also be coordinated around commercial vessels traffic to avoid interruption of transits. Before the effective period, we will issue maritime advisories widely available to users of the waterway.

Assistance for Small Entities

Under section 213(a) of the Small Business Regulatory Enforcement Fairness Act of 1996 (Pub. L. 104–121), we offer to assist small entities in understanding the rule so that they can better evaluate its effects on them and participate in the rulemaking process. If the rule would affect your small business, organization, or governmental jurisdiction and you have questions concerning its provisions or options for compliance, please contact MST1 David Labadie at the telephone number or e-mail address indicated under the **FOR FURTHER INFORMATION CONTACT** section of this notice.

Small businesses may send comments on the actions of Federal employees who enforce, or otherwise determine compliance with, Federal regulations to the Small Business and Agriculture Regulatory Enforcement Ombudsman and the Regional Small Business Regulatory Fairness Boards. The Ombudsman evaluates these actions annually and rates each agency's responsiveness to small business. If you wish to comment on actions by employees of the Coast Guard, call 1–888–REG–FAIR (1–888–734–3247). The Coast Guard will not retaliate against small entities that question or complain about this rule or any policy or action of the Coast Guard.

Collection of Information

This rule calls for no new collection of information under the Paperwork Reduction Act of 1995 (44 U.S.C. 3501–3520).

Federalism

A rule has implications for federalism under Executive Order 13132, Federalism, if it has a substantial direct effect on State or local governments and would either preempt State law or impose a substantial direct cost of compliance on them. We have analyzed this rule under that Order and have determined that it does not have implications for federalism.

Unfunded Mandates Reform Act

The Unfunded Mandates Reform Act of 1995 (2 U.S.C. 1531–1538) requires Federal agencies to assess the effects of their discretionary regulatory actions. In particular, the Act addresses actions that may result in the expenditure by a State, local, or tribal government, in the aggregate, or by the private sector of $100,000,000 (adjusted for inflation) or more in any one year. Though this rule will not result in such expenditure, we do discuss the effects of this rule elsewhere in this preamble.

Taking of Private Property

This rule will not cause a taking of private property or otherwise have taking implications under Executive Order 12630, Governmental Actions and Interference with Constitutionally Protected Property Rights.

Civil Justice Reform

This rule meets applicable standards in sections 3(a) and 3(b)(2) of Executive Order 12988, Civil Justice Reform, to minimize litigation, eliminate ambiguity, and reduce burden.

Protection of Children

We have analyzed this rule under Executive Order 13045, Protection of Children from Environmental Health Risks and Safety Risks. This rule is not an economically significant rule and does not create an environmental risk to health or risk to safety that may disproportionately affect children.

Indian Tribal Governments

This rule does not have tribal implications under Executive Order 13175, Consultation and Coordination with Indian Tribal Governments, because it does not have a substantial direct effect on one or more Indian tribes, on the relationship between the Federal Government and Indian tribes, or on the distribution of power and responsibilities between the Federal Government and Indian tribes.

Energy Effects

We have analyzed this rule under Executive Order 13211, Actions Concerning Regulations That Significantly Affect Energy Supply, Distribution, or Use. We have determined that it is not a ''significant energy action'' under that order because it is not a ''significant regulatory action'' under Executive Order 12866 and is not likely to have a significant adverse effect on the supply, distribution, or use of energy. The Administrator of the Office of Information and Regulatory Affairs has not designated it as a significant energy action. Therefore, it does not require a Statement of Energy Effects under Executive Order 13211.

Technical Standards

The National Technology Transfer and Advancement Act (NTTAA) (15 U.S.C. 272 note) directs agencies to use voluntary consensus standards in their regulatory activities unless the agency provides Congress, through the Office of Management and Budget, with an explanation of why using these standards would be inconsistent with applicable law or otherwise impractical. Voluntary consensus standards are technical standards (*e.g.,* specifications of materials, performance, design, or operation; test methods; sampling procedures; and related management systems practices) that are developed or adopted by voluntary consensus standards bodies.

This rule does not use technical standards. Therefore, we did not consider the use of voluntary consensus standards.

Environment

We have analyzed this rule under Department of Homeland Security Management Directive 023–01 and Commandant Instruction M16475.lD, which guide the Coast Guard in complying with the National Environmental Policy Act of 1969 (NEPA)(42 U.S.C. 4321–4370f), and have concluded that this action is one of a category of actions that do not individually or cumulatively have a significant effect on the human

environment. This rule is categorically excluded, under figure 2–1, paragraph (34)(g), of the Instruction. This rule involves the establishment of a safety zone. An environmental analysis checklist and a categorical exclusion determination are available in the docket where indicated under **ADDRESSES**.

List of Subjects in 33 CFR Part 165

Marine safety, Navigation (water), Reporting and recordkeeping requirements, Waterways.

For the reasons discussed in the preamble, the Coast Guard amends 33 CFR Part 165 as follows:

PART 165—REGULATED NAVIGATION AREAS AND LIMITED ACCESS AREAS

■ 1. The authority citation for part 165 continues to read as follows:

Authority: 33 U.S.C. 1226, 1231; 46 U.S.C. Chapter 701, 3306, 3703; 50 U.S.C. 191, 195; 33 CFR 1.05–1(g), 6.04–1, 6.04–6, and 160.5; Pub. L. 107–295, 116 Stat. 2064; Department of Homeland Security Delegation No. 0170.1.

■ 2. Add § 165.T01–437 to read as follows:

§ 165.T01–437 Safety Zone; Fan Pier Yacht Club Fireworks, Boston Harbor, Boston, Massachusetts.

(a) *General.* A temporary safety zone is established for the fireworks display as follows:

(1) *Location.* All waters of Boston Harbor, from surface to bottom, within a 150-yard radius of position 42°21.13′ N; 071°02.11′ W. This position is located in the Boston Harbor near the Boston Fish Pier.

(2) *Enforcement Period.* This rule is effective and will be enforced from 9:30 p.m. to 10 p.m. on June 30, 2011.

(b) *Regulations.* (1) In accordance with the general regulations in § 165.23 of this part, entering into, transiting through, mooring or anchoring within this regulated area is prohibited unless authorized by the Captain of the Port (COTP) Boston, or the designated on-scene representative.

(2) The ''on-scene representative'' is any Coast Guard commissioned, warrant, or petty officer who has been designated by the COTP Boston to act on his behalf. The on-scene representative will be aboard either a Coast Guard or Coast Guard Auxiliary vessel.

(3) Vessel operators desiring to enter or operate within the regulated area shall contact the COTP or the designated on-scene representative via VHF channel 16 or 617–223–5750 (Sector Boston command center) to obtain permission to do so.

(4) Vessel operators given permission to enter or operate in the regulated area must comply with all directions given to them by the Captain of the Port or the designated on-scene representative.

Dated: June 10, 2011.

John N. Healey,

Captain, U.S. Coast Guard, Captain of the Port Boston.

[FR Doc. 2011–15789 Filed 6–23–11; 8:45 am]

BILLING CODE 9110–04–P

DEPARTMENT OF HOMELAND SECURITY

Coast Guard

33 CFR Part 165

[Docket No. USCG–2011–0397]

RIN 1625–AA00

Safety Zone; Stockton Ports Baseball Club Fourth of July Fireworks Display, Stockton, CA

AGENCY: Coast Guard, DHS.

ACTION: Temporary final rule.

SUMMARY: The Coast Guard is establishing a temporary safety zone in the navigable waters off of Weber Point in Stockton, California in support of a fourth of July fireworks display. This temporary safety zone is established to ensure the safety of participants and spectators from the dangers associated with the pyrotechnics. Unauthorized persons or vessels are prohibited from entering into, transiting through, or remaining in the safety zone without permission of the Captain of the Port or a designated representative.

DATES: This rule is effective from 9:15 p.m. through 10 p.m. on July 4, 2011.

ADDRESSES: Documents indicated in this preamble as being available in the docket are part of docket USCG–2011–0397 and are available online by going to *http://www.regulations.gov,* inserting USCG–2011–0397 in the ''Keyword'' box, and then clicking ''Search.'' They are also available for inspection or copying two locations: the Docket Management Facility (M–30), U.S. Department of Transportation, West Building Ground Floor, Room W12–140, 1200 New Jersey Avenue, SE., Washington, DC 20590, between 9 a.m. and 5 p.m., Monday through Friday, except Federal holidays.

FOR FURTHER INFORMATION CONTACT: If you have questions on this temporary rule, call Lieutenant Junior Grade Liezl Nicholas, U.S. Coast Guard Sector San Francisco, at (415) 399–7436 or e-mail *D11-PF-MarineEvents@uscg.mil.* If you have questions on viewing the docket, call Renee V. Wright, Program Manager, Docket Operations, telephone 202–366–9826.

SUPPLEMENTARY INFORMATION:

Regulatory Information

The Coast Guard is issuing this temporary final rule without prior notice and opportunity to comment pursuant to authority under section 4(a) of the Administrative Procedure Act (APA) (5 U.S.C. 553(b)). This provision authorizes an agency to issue a rule without prior notice and opportunity to comment when the agency for good cause finds that those procedures are ''impracticable, unnecessary, or contrary to the public interest.'' Under 5 U.S.C. 553(b)(B), the Coast Guard finds that good cause exists for not publishing a notice of proposed rulemaking (NPRM) with respect to this rule because the event would occur before the rulemaking process would be completed. Because of the dangers posed by the pyrotechnics used in this fireworks display, the safety zone is necessary to provide for the safety of event participants, spectators, spectator craft, and other vessels transiting the event area. For the safety concerns noted, it is in the public interest to have these regulations in effect during the event.

Under 5 U.S.C. 553(d)(3), the Coast Guard finds that good cause exists for making this rule effective less than 30 days after publication in the **Federal Register**. Any delay in the effective date of this rule would expose mariners to the dangers posed by the pyrotechnics used in the fireworks display.

Basis and Purpose

Stockton Ports Baseball Club will sponsor the Stockton Ports Baseball Club Fourth of July Fireworks Display on July 4, 2011 on the navigable waters off of Weber Point, in Stockton, California. The fireworks display is meant for entertainment purposes. This safety zone is issued to establish a temporary restricted area on the waters surrounding the fireworks launch site during loading of the pyrotechnics, and during the fireworks display. This restricted area around the launch site is necessary to protect spectators, vessels, and other property from the hazards associated with the pyrotechnics. The Coast Guard has granted the event sponsor a marine event permit for the fireworks display.

Discussion of Rule

During the set up of the fireworks and until the start of the fireworks display, the temporary safety zone applies to the

navigable waters around the fireworks launch site within a radius of 100 feet. From 9:30 p.m. until 9:50 p.m., the area to which the temporary safety zone applies will increase in size to encompass the navigable waters around the fireworks launch site within a radius of 1,000 feet. The fireworks launch site will be located on land in position 37°57′15.69″ N, 121°17′39.74″ W (NAD 83).

The effect of the temporary safety zone will be to restrict navigation in the vicinity of the fireworks launch site while the fireworks are set up, and until the conclusion of the scheduled display. Except for persons or vessels authorized by the Coast Guard Patrol Commander, no person or vessel may enter or remain in the restricted area. These regulations are needed to keep spectators and vessels a safe distance away from the fireworks launch site to ensure the safety of participants, spectators, and transiting vessels.

Regulatory Analyses

We developed this rule after considering numerous statutes and executive orders related to rulemaking. Below we summarize our analyses based on 13 of these statutes or executive orders.

Regulatory Planning and Review

This rule is not a significant regulatory action under section 3(f) of Executive Order 12866, Regulatory Planning and Review, and does not require an assessment of potential costs and benefits under section 6(a)(3) of that Order. The Office of Management and Budget has not reviewed it under that Order.

Although this rule restricts access to the waters encompassed by the safety zone, the effect of this rule will not be significant because the local waterway users will be notified via public Broadcast Notice to Mariners to ensure the safety zone will result in minimum impact. The entities most likely to be affected are pleasure craft engaged in recreational activities.

Small Entities

Under the Regulatory Flexibility Act (5 U.S.C. 601–612), we have considered whether this rule would have a significant economic impact on a substantial number of small entities. The term ''small entities'' comprises small businesses, not-for-profit organizations that are independently owned and operated and are not dominant in their fields, and governmental jurisdictions with populations of less than 50,000.

The Coast Guard certifies under 5 U.S.C. 605(b) that this rule will not have a significant economic impact on a substantial number of small entities.

This rule may affect owners and operators of pleasure craft engaged in recreational activities and sightseeing. This rule will not have a significant economic impact on a substantial number of small entities for several reasons: (i) vessel traffic can pass safely around the area, (ii) vessels engaged in recreational activities and sightseeing have ample space outside of the effected portion of the areas off of Stockton, CA to engage in these activities, (iii) this rule will encompass only a small portion of the waterway for a limited period of time, and (iv) the maritime public will be advised in advance of this safety zone via Broadcast Notice to Mariners.

Assistance for Small Entities

Under section 213(a) of the Small Business Regulatory Enforcement Fairness Act of 1996 (Pub. L. 104–121), we offer to assist small entities in understanding the rule so that they can better evaluate its effects on them and participate in the rulemaking process.

Small businesses may send comments on the actions of Federal employees who enforce, or otherwise determine compliance with, Federal regulations to the Small Business and Agriculture Regulatory Enforcement Ombudsman and the Regional Small Business Regulatory Fairness Boards. The Ombudsman evaluates these actions annually and rates each agency's responsiveness to small business. If you wish to comment on actions by employees of the Coast Guard, call 1–888–REG–FAIR (1–888–734–3247). The Coast Guard will not retaliate against small entities that question or complain about this rule or any policy or action of the Coast Guard.

Collection of Information

This rule calls for no new collection of information under the Paperwork Reduction Act of 1995 (44 U.S.C. 3501–3520).

Federalism

A rule has implications for federalism under Executive Order 13132, Federalism, if it has a substantial direct effect on State or local governments and would either preempt State law or impose a substantial direct cost of compliance on them. We have analyzed this rule under that Order and have determined that it does not have implications for federalism.

Unfunded Mandates Reform Act

The Unfunded Mandates Reform Act of 1995 (2 U.S.C. 1531–1538) requires Federal agencies to assess the effects of their discretionary regulatory actions. In particular, the Act addresses actions that may result in the expenditure by a State, local, or tribal government, in the aggregate, or by the private sector of $100,000,000 or more in any one year. Though this rule will not result in such an expenditure, we do discuss the effects of this rule elsewhere in this preamble.

Taking of Private Property

This rule will not effect a taking of private property or otherwise have taking implications under Executive Order 12630, Governmental Actions and Interference with Constitutionally Protected Property Rights.

Civil Justice Reform

This rule meets applicable standards in sections 3(a) and 3(b)(2) of Executive Order 12988, Civil Justice Reform, to minimize litigation, eliminate ambiguity, and reduce burden.

Protection of Children

We have analyzed this rule under Executive Order 13045, Protection of Children from Environmental Health Risks and Safety Risks. This rule is not an economically significant rule and does not create an environmental risk to health or risk to safety that may disproportionately affect children.

Indian Tribal Governments

This rule does not have tribal implications under Executive Order 13175, Consultation and Coordination with Indian Tribal Governments, because it does not have a substantial direct effect on one or more Indian tribes, on the relationship between the Federal Government and Indian tribes, or on the distribution of power and responsibilities between the Federal Government and Indian tribes.

Energy Effects

We have analyzed this rule under Executive Order 13211, Actions Concerning Regulations That Significantly Affect Energy Supply, Distribution, or Use. We have determined that it is not a ''significant energy action'' under that order because it is not a ''significant regulatory action'' under Executive Order 12866 and is not likely to have a significant adverse effect on the supply, distribution, or use of energy. The Administrator of the Office of Information and Regulatory Affairs has not designated it as a significant energy action. Therefore, it does not

require a Statement of Energy Effects under Executive Order 13211.

Technical Standards

The National Technology Transfer and Advancement Act (NTTAA) (15 U.S.C. 272 note) directs agencies to use voluntary consensus standards in their regulatory activities unless the agency provides Congress, through the Office of Management and Budget, with an explanation of why using these standards would be inconsistent with applicable law or otherwise impractical. Voluntary consensus standards are technical standards (*e.g.,* specifications of materials, performance, design, or operation; test methods; sampling procedures; and related management systems practices) that are developed or adopted by voluntary consensus standards bodies.

This rule does not use technical standards. Therefore, we did not consider the use of voluntary consensus standards.

Environment

We have analyzed this rule under Department of Homeland Security Management Directive 0023.1 and Commandant Instruction M16475.lD, which guide the Coast Guard in complying with the National Environmental Policy Act of 1969 (NEPA) (42 U.S.C. 4321–4370f), and have concluded this action is one of a category of actions which do not individually or cumulatively have a significant effect on the human environment. This rule is categorically excluded, under figure 2–1, paragraph (34)(g), of the Instruction. This rule involves establishing a temporary safety zone.

An environmental analysis checklist and a categorical exclusion determination are available in the docket where indicated under **ADDRESSES**.

List of Subjects in 33 CFR Part 165

Harbors, Marine safety, Navigation (water), Reporting and recordkeeping requirements, Security measures, and Waterways.

For the reasons discussed in the preamble, the Coast Guard amends 33 CFR part 165 as follows:

PART 165—REGULATED NAVIGATION AREAS AND LIMITED ACCESS AREAS

■ 1. The authority citation for part 165 continues to read as follows:

Authority: 33 U.S.C. 1226, 1231; 46 U.S.C. Chapter 701; 50 U.S.C. 191, 195; 33 CFR 1.05–1(g), 6.04–1, 6.04–6, and 160.5; Pub. L. 107–295, 116 Stat. 2064; Department of Homeland Security Delegation No. 0170.1.

■ 2. Add temporary § 165.T11–422 to read as follows:

§ 165.T11–422 Safety Zone; Stockton Ports Baseball Club Fourth of July Fireworks Display, Stockton, CA.

(a) *Location.* (1) This temporary safety zone is established for the waters off of Weber Point in Stockton, CA. The fireworks launch site will be located on land in position 37°57′15.69″ N, 121°17′39.74″ W (NAD 83).

(2) During the loading of the fireworks, and until the start of the fireworks display, the temporary safety zone applies to the navigable waters around the fireworks site within a radius of 100 feet. From 9:30 p.m. until 9:50 p.m. on July 4, 2010, the area to which the temporary safety zone applies will increase in size to encompass the navigable waters around the fireworks site within a radius of 1,000 feet.

(b) *Definitions.* As used in this section, ''designated representative'' means a Coast Guard Patrol Commander, including a Coast Guard coxswain, petty officer, or other officer operating a Coast Guard vessel and a Federal, State, and local officer designated by or assisting the Captain of the Port San Francisco (COTP) in the enforcement of the safety zone.

(c) *Regulations.* (1) Under the general regulations in § 165.23, entry into, transiting, or anchoring within this safety zone is prohibited unless authorized by the COTP or the COTP's designated representative.

(2) The safety zone is closed to all vessel traffic, except as may be permitted by the COTP or a designated representative.

(3) Vessel operators desiring to enter or operate within the safety zone must contact the COTP or a designated representative to obtain permission to do so. Vessel operators given permission to enter or operate in the safety zone must comply with all directions given to them by the COTP or the designated representative. Persons and vessels may request permission to enter the safety zone on VHF–16 or through the 24-hour Command Center at telephone (415) 399–3547.

(d) *Effective period.* This section is effective from 9:15 p.m. to 10 p.m. on July 4, 2011.

Dated: June 9, 2011.

Cynthia. L. Stowe,

Captain, U.S. Coast Guard, Captain of the Port San Francisco.

[FR Doc. 2011–15793 Filed 6–23–11; 8:45 am]

BILLING CODE 9110–04–P

DEPARTMENT OF HOMELAND SECURITY

Coast Guard

33 CFR Part 165

[Docket No. USCG–2011–0398]

RIN 1625–AA00

Safety Zone; Jameson Beach Fourth of July Fireworks Display

AGENCY: Coast Guard, DHS.

ACTION: Temporary final rule.

SUMMARY: The Coast Guard is establishing a temporary safety zone in the navigable waters of South Lake Tahoe, for the Jameson Beach Fourth of July Fireworks Display. This safety zone is established to ensure the safety of the participants and spectators from the dangers associated with the pyrotechnics. Unauthorized persons or vessels are prohibited from entering into, transiting through, or remaining in the safety zone without permission of the Captain of the Port or a designated representative.

DATES: This rule is effective from 9 a.m. on July 3, 2011 through 10:15 p.m. on July 4, 2011.

ADDRESSES: Documents indicated in this preamble as being available in the docket are part of docket USCG–2011–0398 and are available online by going to *http://www.regulations.gov,* selecting the Advanced Docket Search option on the right side of the screen, inserting USCG–2011–0398 in the Docket ID box, pressing Enter, and then clicking on the item in the Docket ID column. They are also available for inspection or copying at the Docket Management Facility (M–30), U.S. Department of Transportation, West Building Ground Floor, Room W12–140, 1200 New Jersey Avenue, SE., Washington, DC 20590, between 9 a.m. and 5 p.m., Monday through Friday, except Federal holidays.

FOR FURTHER INFORMATION CONTACT: If you have questions on this temporary rule, call or e-mail Lieutenant Junior Grade Liezl Nicholas, U.S. Coast Guard Sector San Francisco, at (415) 399–7436 or at *D11-PF-MarineEvents@uscg.mil.* If you have questions on viewing the docket, call Renee V. Wright, Program Manager, Docket Operations, telephone (202) 366–9826.

SUPPLEMENTARY INFORMATION:

Regulatory Information

The Coast Guard is issuing this temporary final rule without prior notice and opportunity to comment pursuant to authority under section 4(a) of the Administrative Procedure Act

(APA) (5 U.S.C. 553(b)). This provision authorizes an agency to issue a rule without prior notice and opportunity to comment when the agency for good cause finds that those procedures are ''impracticable, unnecessary, or contrary to the public interest.'' Under 5 U.S.C. 553(b)(B), the Coast Guard finds that good cause exists for not publishing a notice of proposed rulemaking (NPRM) with respect to this rule because the event would occur before the rulemaking process would be completed. Because of the dangers posed by the pyrotechnics used in this fireworks display, the safety zone is necessary to provide for the safety of event participants, spectator craft, and other vessels transiting the event area. For the safety concerns noted, it is in the public interest to have these regulations in effect during the event.

Under 5 U.S.C. 553(d)(3), the Coast Guard finds that good cause exists for making this rule effective less than 30 days after publication in the **Federal Register**. Any delay in the effective date of this rule would expose mariners to the dangers posed by the pyrotechnics used in the fireworks display.

Background and Purpose

Document Systems Inc. will sponsor a fireworks display on July 4, 2011 in the waters of South Lake Tahoe. The fireworks display is meant for entertainment purposes. This safety zone is issued to establish a temporary restricted area off of Jameson Beach in South Lake Tahoe, California while the pyrotechnics are being loaded on the pyrotechnics barge, transited to the launch location and during the fireworks display. This restricted area around the launch barge is necessary to protect spectators, vessels, and other property from the hazards associated with the pyrotechnics on the fireworks barges. The Coast Guard has granted the event sponsor a marine event permit for the fireworks display.

Discussion of Rule

The Coast Guard is establishing a temporary safety zone in the navigable waters of South Lake Tahoe. During the loading of the fireworks barge, while the barge is towed to the display location, and until the start of the fireworks display, the temporary safety zone applies to the navigable waters around and under the fireworks barge within a radius of 100 feet. Loading of the pyrotechnics onto the fireworks barge is scheduled to commence at 9 a.m. on July 3, 2011, and will take place at the Tahoe Keys Marina in South Lake Tahoe, California. Towing of the barge from the Marina to the display location is scheduled to take place at 9 a.m. on July 4, 2011. From 9:45 p.m. until 10 p.m. on July 4, 2011 the area to which the temporary safety zone applies will increase in size to encompass the navigable waters around and under the fireworks barge within a radius of 1,000 feet. During the fireworks display, scheduled to commence at approximately 9:45 p.m. on July 4, 2011, the fireworks barge will be located in position 38° 56′24.89″ N, 120° 02′07.37″ W (NAD 83). The fireworks display is scheduled to last approximately fifteen minutes.

The effect of the temporary safety zone will be to restrict navigation in the vicinity of the fireworks barge while the fireworks are loaded, during the transit of the fireworks barge, and until the conclusion of the scheduled display. Except for persons or vessels authorized by the Coast Guard Patrol Commander, no person or vessel may enter or remain in the restricted area. These regulations are needed to keep spectators and vessels a safe distance away from the fireworks barge to ensure the safety of participants, spectators, and transiting vessels.

Regulatory Analyses

We developed this rule after considering numerous statutes and executive orders related to rulemaking. Below we summarize our analyses based on 13 of these statutes or executive orders.

Regulatory Planning and Review

This rule is not a significant regulatory action under section 3(f) of Executive Order 12866, Regulatory Planning and Review, and does not require an assessment of potential costs and benefits under section 6(a)(3) of that Order. The Office of Management and Budget has not reviewed it under that Order.

Although this rule restricts access to the waters encompassed by the safety zone, the effect of this rule will not be significant because the local waterway users will be notified via public Broadcast Notice to Mariners to ensure the safety zone will result in minimum impact. The entities most likely to be affected are pleasure craft engaged in recreational activities.

Small Entities

Under the Regulatory Flexibility Act (5 U.S.C. 601–612), we have considered whether this rule would have a significant economic impact on a substantial number of small entities. The term ''small entities'' comprises small businesses, not-for-profit organizations that are independently owned and operated and are not dominant in their fields, and governmental jurisdictions with populations of less than 50,000.

The Coast Guard certifies under 5 U.S.C. 605(b) that this rule will not have a significant economic impact on a substantial number of small entities.

This rule may affect owners and operators of pleasure craft engaged in recreational activities and sightseeing. This rule will not have a significant economic impact on a substantial number of small entities for several reasons: (i) Vessel traffic can pass safely around the area, (ii) vessels engaged in recreational activities and sightseeing have ample space outside of the effected portion of Lake Tahoe to engage in these activities, (iii) this rule will encompass only a small portion of the waterway for a limited period of time, and (iv) the maritime public will be advised in advance of this safety zone via Broadcast Notice to Mariners.

Assistance for Small Entities

Under section 213(a) of the Small Business Regulatory Enforcement Fairness Act of 1996 (Pub. L. 104–121), we offer to assist small entities in understanding the rule so that they can better evaluate its effects on them and participate in the rulemaking process.

Small businesses may send comments on the actions of Federal employees who enforce, or otherwise determine compliance with, Federal regulations to the Small Business and Agriculture Regulatory Enforcement Ombudsman and the Regional Small Business Regulatory Fairness Boards. The Ombudsman evaluates these actions annually and rates each agency's responsiveness to small business. If you wish to comment on actions by employees of the Coast Guard, call 1–888–REG–FAIR (1–888–734–3247). The Coast Guard will not retaliate against small entities that question or complain about this rule or any policy or action of the Coast Guard.

Collection of Information

This rule calls for no new collection of information under the Paperwork Reduction Act of 1995 (44 U.S.C. 3501–3520).

Federalism

A rule has implications for federalism under Executive Order 13132, Federalism, if it has a substantial direct effect on State or local governments and would either preempt State law or impose a substantial direct cost of compliance on them. We have analyzed this rule under that Order and have

determined that it does not have implications for federalism.

Unfunded Mandates Reform Act

The Unfunded Mandates Reform Act of 1995 (2 U.S.C. 1531–1538) requires Federal agencies to assess the effects of their discretionary regulatory actions. In particular, the Act addresses actions that may result in the expenditure by a State, local, or tribal government, in the aggregate, or by the private sector of $100,000,000 or more in any one year. Though this rule will not result in such an expenditure, we do discuss the effects of this rule elsewhere in this preamble.

Taking of Private Property

This rule will not affect a taking of private property or otherwise have taking implications under Executive Order 12630, Governmental Actions and Interference with Constitutionally Protected Property Rights.

Civil Justice Reform

This rule meets applicable standards in sections 3(a) and 3(b)(2) of Executive Order 12988, Civil Justice Reform, to minimize litigation, eliminate ambiguity, and reduce burden.

Protection of Children

We have analyzed this rule under Executive Order 13045, Protection of Children from Environmental Health Risks and Safety Risks. This rule is not an economically significant rule and does not create an environmental risk to health or risk to safety that may disproportionately affect children.

Indian Tribal Governments

This rule does not have tribal implications under Executive Order 13175, Consultation and Coordination with Indian Tribal Governments, because it does not have a substantial direct effect on one or more Indian tribes, on the relationship between the Federal Government and Indian tribes, or on the distribution of power and responsibilities between the Federal Government and Indian tribes.

Energy Effects

We have analyzed this rule under Executive Order 13211, Actions Concerning Regulations That Significantly Affect Energy Supply, Distribution, or Use. We have determined that it is not a ''significant energy action'' under that order because it is not a ''significant regulatory action'' under Executive Order 12866 and is not likely to have a significant adverse effect on the supply, distribution, or use of energy. The Administrator of the Office of Information and Regulatory Affairs has not designated it as a significant energy action. Therefore, it does not require a Statement of Energy Effects under Executive Order 13211.

Technical Standards

The National Technology Transfer and Advancement Act (NTTAA) (15 U.S.C. 272 note) directs agencies to use voluntary consensus standards in their regulatory activities unless the agency provides Congress, through the Office of Management and Budget, with an explanation of why using these standards would be inconsistent with applicable law or otherwise impractical. Voluntary consensus standards are technical standards (*e.g.,* specifications of materials, performance, design, or operation; test methods; sampling procedures; and related management systems practices) that are developed or adopted by voluntary consensus standards bodies.

This rule does not use technical standards. Therefore, we did not consider the use of voluntary consensus standards.

Environment

We have analyzed this rule under Department of Homeland Security Management Directive 0023.1 and Commandant Instruction M16475.lD, which guide the Coast Guard in complying with the National Environmental Policy Act of 1969 (NEPA) (42 U.S.C. 4321–4370f), and have concluded this action is one of a category of actions which do not individually or cumulatively have a significant effect on the human environment. This rule is categorically excluded, under Figure 2–1, paragraph (34)(g), of the Instruction, from further environmental documentation. This rule involves establishing a temporary safety zone.

An environmental analysis checklist and a categorical exclusion determination are available in the docket where indicated under **ADDRESSES**.

List of Subjects in 33 CFR Part 165

Harbors, Marine safety, Navigation (water), Reporting and recordkeeping requirements, Security measures, and Waterways.

For the reasons discussed in the preamble, the Coast Guard amends 33 CFR part 165 as follows:

PART 165—REGULATED NAVIGATION AREAS AND LIMITED ACCESS AREAS

■ 1. The authority citation for part 165 continues to read as follows:

Authority: 33 U.S.C. 1226, 1231; 46 U.S.C. Chapter 701, 3306, 3703; 50 U.S.C. 191, 195; 33 CFR 1.05–1, 6.04–1, 6.04–6, and 160.5; Pub. L. 107–295, 116 Stat. 2064; Department of Homeland Security Delegation No. 0170.1.

■ 2. Add temporary § 165.T11–423 to read as follows:

§ 165.T11–423 Safety Zone; Jameson Beach Fourth of July Fireworks Display.

(a) *Location.* This temporary safety zone is established for the specified waters of Lake Tahoe.

(1) Loading of the pyrotechnics onto the fireworks barge will take place at 9 a.m. at Tahoe Keys Marina in South Lake Tahoe, CA, on July 3, 2011.

(2) Towing of the barge from the pier to the display location is scheduled to take place at 9 a.m. on July 4, 2011.

(3) During the fireworks display, scheduled to commence at approximately 9:45 p.m. on July 4, 2011, the fireworks barge will be located approximately 1,000 feet off of Jameson Beach in South Lake Tahoe, CA in position 38° 56′24.89″ N, 120° 02′07.37″ W (NAD 83).

(4) During the loading of the fireworks barge, while the barge is towed to the display location, and until the start of the fireworks display, the temporary safety zone applies to the navigable waters around and under the fireworks barge within a radius of 100 feet. From 9:45 p.m. until 10 p.m. on July 4, 2011, the area to which the temporary safety zone applies will increase in size to encompass the navigable waters around and under the fireworks barge within a radius of 1,000 feet.

(b) *Definitions.* As used in this section, designated representative means a Coast Guard Patrol Commander, including a Coast Guard coxswain, petty officer, or other officer operating a Coast Guard vessel and a Federal, State, and local officer designated by or assisting the Captain of the Port San Francisco (COTP) in the enforcement of the safety zone.

(c) *Regulations.* (1) Under the general regulations in § 165.23, entry into, transiting, or anchoring within this safety zone is prohibited unless authorized by the COTP or the COTP's designated representative.

(2) The safety zone is closed to all vessel traffic, except as may be permitted by the COTP or the COTP's designated representative.

(3) Vessel operators desiring to enter or operate within the safety zone must contact the COTP or the COTP's representative to obtain permission to do so. Vessel operators given permission to enter or operate in the safety zone must comply with all directions given to them by the COTP or the COTP's

designated representative. Persons and vessels may request permission to enter the safety zone on VHF–16 or the 24-hour Command Center via telephone at (415) 399–3547.

(d) *Effective period.* This section is effective from 9 a.m. on July 3, 2011 through 10:15 p.m. on July 4, 2011.

Dated: June 9, 2011.

Cynthia. L. Stowe,

Captain, U.S. Coast Guard, Captain of the Port San Francisco.

[FR Doc. 2011–15795 Filed 6–23–11; 8:45 am]

BILLING CODE 9110–04–P

DEPARTMENT OF HOMELAND SECURITY

Coast Guard

33 CFR Part 165

[Docket No. USCG–2011–0399]

RIN 1625–AA00

Safety Zone; Independence Day Fireworks Celebration for the City of Richmond, Richmond, CA

AGENCY: Coast Guard, DHS.

ACTION: Temporary final rule.

SUMMARY: The Coast Guard is establishing a temporary safety zone in the navigable waters of Richmond Inner Harbor, off of the Lucretia Edwards Park in Richmond, CA in support of the Independence Day Fireworks Celebration for the City of Richmond. This temporary safety zone is established to ensure the safety of participants and spectators from the dangers associated with the pyrotechnics. Unauthorized persons or vessels are prohibited from entering into, transiting through, or remaining in the safety zone without permission of the Captain of the Port or a designated representative.

DATES: This rule is effective from 9 a.m. through 10 p.m. on July 3, 2011.

ADDRESSES: Documents indicated in this preamble as being available in the docket are part of docket USCG–2011–0399 and are available online by going to *http://www.regulations.gov,* inserting USCG–2011–0399 in the ''Keyword'' box, and then clicking ''Search.'' They are also available for inspection or copying at the Docket Management Facility (M–30), U.S. Department of Transportation, West Building Ground Floor, Room W12–140, 1200 New Jersey Avenue, SE., Washington, DC 20590, between 9 a.m. and 5 p.m., Monday through Friday, except Federal holidays.

FOR FURTHER INFORMATION CONTACT: If you have questions on this temporary rule, call Lieutenant Junior Grade Liezl Nicholas at (415) 399–7436, or e-mail *D11-PF-MarineEvents@uscg.mil.* If you have questions on viewing the docket, call Renee V. Wright, Program Manager, Docket Operations, telephone 202–366–9826.

SUPPLEMENTARY INFORMATION:

Regulatory Information

The Coast Guard is issuing this temporary final rule without prior notice and opportunity to comment pursuant to authority under section 4(a) of the Administrative Procedure Act (APA) (5 U.S.C. 553(b)). This provision authorizes an agency to issue a rule without prior notice and opportunity to comment when the agency for good cause finds that those procedures are ''impracticable, unnecessary, or contrary to the public interest.'' Under 5 U.S.C. 553(b)(B), the Coast Guard finds that good cause exists for not publishing a notice of proposed rulemaking (NPRM) with respect to this rule because the event would occur before the rulemaking process would be completed. Because of the dangers posed by the pyrotechnics used in these fireworks displays, the safety zones are necessary to provide for the safety of event participants, spectators, spectator craft, and other vessels transiting the event area. For the safety concerns noted, it would be impracticable to not have these regulations in effect during the event.

Under 5 U.S.C. 553(d)(3), the Coast Guard finds that good cause exists for making this rule effective less than 30 days after publication in the **Federal Register**. Any delay in the effective date of this rule would expose mariners to the dangers posed by the pyrotechnics used in the fireworks display.

Background and Purpose

The City of Richmond will sponsor the Independence Day Fireworks Celebration for the City of Richmond on July 3, 2011, on the navigable waters of Richmond Inner Harbor, off of the Lucretia Edwards Park, Richmond, California. The fireworks display is meant for entertainment purposes. This temporary safety zone establishes a temporary restricted area on the waters surrounding the fireworks launch site during the fireworks displays. This temporary safety zone around the launch site is necessary to protect spectators, vessels, and other property from the hazards associated with the pyrotechnics over the water. The Coast Guard has granted the event sponsor a marine event permit for the fireworks displays.

Discussion of Rule

From 9 a.m. until 9:30 p.m. on July 3, 2011, the temporary safety zone will extend 100 feet while pyrotechnics are loaded onto the land launch site at position 37°54′34.14″ N, 122°21′16.93″ W (NAD 83). The fireworks display will occur from 9:30 p.m. until 9:50 p.m., during which the safety zone will extend 1,000 feet off of the Lucretia Edwards Park land launch site at position 37°51′40.34″ N, 122°19′19.59″ W (NAD 83). At 10 p.m. the safety zone shall terminate.

The effect of the temporary safety zone will be to restrict navigation in the vicinity of the fireworks site while the fireworks are set up, and until the conclusion of the scheduled displays. Except for persons or vessels authorized by the Coast Guard Patrol Commander, no person or vessel may enter or remain in the restricted area. These regulations are needed to keep spectators and vessels a safe distance away from the launch site to ensure the safety of participants, spectators, and transiting vessels.

Regulatory Analyses

We developed this rule after considering numerous statutes and executive orders related to rulemaking. Below we summarize our analyses based on 13 of these statutes or executive orders.

Regulatory Planning and Review

This rule is not a significant regulatory action under section 3(f) of Executive Order 12866, Regulatory Planning and Review, and does not require an assessment of potential costs and benefits under section 6(a)(3) of that Order. The Office of Management and Budget has not reviewed it under that Order.

Although this rule restricts access to the waters encompassed by the safety zone, the effect of this rule will not be significant. The entities most likely to be affected are pleasure craft engaged in recreational activities. In addition, the rule will only restrict access for a limited time. Finally, the Public Broadcast Notice to Mariners will notify the users of local waterway to ensure that the safety zone will result in minimum impact.

Small Entities

Under the Regulatory Flexibility Act (5 U.S.C. 601–612), we have considered whether this rule would have a significant economic impact on a substantial number of small entities. The term ''small entities'' comprises small businesses, not-for-profit organizations that are independently

owned and operated and are not dominant in their fields, and governmental jurisdictions with populations of less than 50,000.

The Coast Guard certifies under 5 U.S.C. 605(b) that this rule will not have a significant economic impact on a substantial number of small entities.

Although this rule may affect owners and operators of pleasure craft engaged in recreational activities and sightseeing, it will not have a significant economic impact on a substantial number of small entities for several reasons: (i) This rule will encompass only a small portion of the waterway for a limited period of time; (ii) vessel traffic can pass safely around the area; (iii) vessels engaged in recreational activities and sightseeing have ample space outside of the affected areas of San Francisco Bay, CA, to engage in these activities; and (iv) the maritime public will be advised in advance of this safety zone via Broadcast Notice to Mariners.

Assistance for Small Entities

Under section 213(a) of the Small Business Regulatory Enforcement Fairness Act of 1996 (Pub. L. 104–121), we offer to assist small entities in understanding the rule so that they can better evaluate its effects on them and participate in the rulemaking process.

Small businesses may send comments on the actions of Federal employees who enforce, or otherwise determine compliance with, Federal regulations to the Small Business and Agriculture Regulatory Enforcement Ombudsman and the Regional Small Business Regulatory Fairness Boards. The Ombudsman evaluates these actions annually and rates each agency's responsiveness to small business. If you wish to comment on actions by employees of the Coast Guard, call 1–888–REG–FAIR (1–888–734–3247). The Coast Guard will not retaliate against small entities that question or complain about this rule or any policy or action of the Coast Guard.

Collection of Information

This rule calls for no new collection of information under the Paperwork Reduction Act of 1995 (44 U.S.C. 3501–3520).

Federalism

A rule has implications for federalism under Executive Order 13132, Federalism, if it has a substantial direct effect on State or local governments and would either preempt State law or impose a substantial direct cost of compliance on them. We have analyzed this rule under that Order and have determined that it does not have implications for federalism.

Unfunded Mandates Reform Act

The Unfunded Mandates Reform Act of 1995 (2 U.S.C. 1531–1538) requires Federal agencies to assess the effects of their discretionary regulatory actions. In particular, the Act addresses actions that may result in the expenditure by a State, local, or tribal government, in the aggregate, or by the private sector of $100,000,000 or more in any one year. Though this rule will not result in such an expenditure, we do discuss the effects of this rule elsewhere in this preamble.

Taking of Private Property

This rule will not effect a taking of private property or otherwise have taking implications under Executive Order 12630, Governmental Actions and Interference with Constitutionally Protected Property Rights.

Civil Justice Reform

This rule meets applicable standards in sections 3(a) and 3(b)(2) of Executive Order 12988, Civil Justice Reform, to minimize litigation, eliminate ambiguity, and reduce burden.

Protection of Children

We have analyzed this rule under Executive Order 13045, Protection of Children from Environmental Health Risks and Safety Risks. This rule is not an economically significant rule and does not create an environmental risk to health or risk to safety that may disproportionately affect children.

Indian Tribal Governments

This rule does not have tribal implications under Executive Order 13175, Consultation and Coordination with Indian Tribal Governments, because it does not have a substantial direct effect on one or more Indian tribes, on the relationship between the Federal Government and Indian tribes, or on the distribution of power and responsibilities between the Federal Government and Indian tribes.

Energy Effects

We have analyzed this rule under Executive Order 13211, Actions Concerning Regulations That Significantly Affect Energy Supply, Distribution, or Use. We have determined that it is not a ''significant energy action'' under that order because it is not a ''significant regulatory action'' under Executive Order 12866 and is not likely to have a significant adverse effect on the supply, distribution, or use of energy. The Administrator of the Office of Information and Regulatory Affairs has not designated it as a significant energy action. Therefore, it does not require a Statement of Energy Effects under Executive Order 13211.

Technical Standards

The National Technology Transfer and Advancement Act (NTTAA) (15 U.S.C. 272 note) directs agencies to use voluntary consensus standards in their regulatory activities unless the agency provides Congress, through the Office of Management and Budget, with an explanation of why using these standards would be inconsistent with applicable law or otherwise impractical. Voluntary consensus standards are technical standards (*e.g.,* specifications of materials, performance, design, or operation; test methods; sampling procedures; and related management systems practices) that are developed or adopted by voluntary consensus standards bodies.

This rule does not use technical standards. Therefore, we did not consider the use of voluntary consensus standards.

Environment

We have analyzed this rule under Department of Homeland Security Management Directive 0023.1 and Commandant Instruction M16475.lD, which guide the Coast Guard in complying with the National Environmental Policy Act of 1969 (NEPA) (42 U.S.C. 4321–4370f), and have concluded this action is one of a category of actions which do not individually or cumulatively have a significant effect on the human environment. This rule is categorically excluded, under Figure 2–1, paragraph (34)(g), of the Instruction. This rule involves establishing, disestablishing, or changing Regulated Navigation Areas and security or safety zones.

An environmental analysis checklist and a categorical exclusion determination are available in the docket where indicated under **ADDRESSES**.

List of Subjects in 33 CFR Part 165

Harbors, Marine safety, Navigation (water), Reporting and recordkeeping requirements, Security measures, and Waterways.

For the reasons discussed in the preamble, the Coast Guard amends 33 CFR part 165 as follows:

PART 165—REGULATED NAVIGATION AREAS AND LIMITED ACCESS AREAS

■ 1. The authority citation for part 165 continues to read as follows:

Authority: 33 U.S.C. 1226, 1231; 46 U.S.C. Chapter 701; 50 U.S.C. 191, 195; 33 CFR 1.05–1, 6.04–1, 6.04–6, and 160.5; Pub. L. 107–295, 116 Stat. 2064; Department of Homeland Security Delegation No. 0170.1.

■ 2. Add temporary § 165.T11–424 to read as follows:

§ 165.T11–424 Safety Zone; Independence Day Fireworks Celebration for the City of Richmond, Richmond, CA.

(a) *Location.* (1) This temporary safety zone is established for the navigable waters of Richmond Inner Harbor, off of the Lucretia Edwards Park, Richmond, CA. The fireworks launch site will be located in position: 37°54′34.14″ N, 122°21′16.93″ W (NAD 83).

(2) From 9 a.m. until 9:30 p.m., the temporary safety zone will extend 100 feet while pyrotechnics are loaded onto the land launch site. From 9:30 p.m. until 9:50 p.m., the area to which the temporary safety zone applies will encompass the navigable waters around the fireworks launch site off of the Lucretia Edwards Park within a radius of 1,000 feet. At 10 p.m., the safety zone shall terminate.

(b) *Definitions.* As used in this section, ''designated representative'' means a Coast Guard Patrol Commander, including a Coast Guard coxswain, petty officer, or other officer operating a Coast Guard vessel and a Federal, State, and local officer designated by or assisting the Captain of the Port San Francisco (COTP) in the enforcement of the safety zone.

(c) *Regulations.* (1) Under the general regulations in § 165.23, entry into, transiting, or anchoring within this safety zone is prohibited unless authorized by the COTP or the COTP's designated representative.

(2) The safety zone is closed to all vessel traffic, except as may be permitted by the COTP or a designated representative.

(3) Vessel operators desiring to enter or operate within the safety zone must contact the COTP or a designated representative to obtain permission to do so. Vessel operators given permission to enter or operate in the safety zone must comply with all directions given to them by the COTP or the designated representative. Persons and vessels may request permission to enter the safety zones on VHF–16 or through the 24-hour Command Center at telephone (415) 399–3547.

(d) *Effective period.* This section is effective from 9 a.m. through 10 p.m. on July 3, 2011.

Dated: June 9, 2011.

Cynthia L. Stowe,

Captain, U.S. Coast Guard, Captain of the Port San Francisco.

[FR Doc. 2011–15798 Filed 6–23–11; 8:45 am]

BILLING CODE 9110–04–P

ENVIRONMENTAL PROTECTION AGENCY

40 CFR Part 141

[EPA–HQ–OW–2011–0413; FRL–9322–3]

Expedited Approval of Alternative Test Procedures for the Analysis of Contaminants Under the Safe Drinking Water Act; Analysis and Sampling Procedures

AGENCY: Environmental Protection Agency (EPA).

ACTION: Final rule.

SUMMARY: This action announces the Environmental Protection Agency's (EPA's) approval of alternative testing methods for use in measuring the levels of contaminants in drinking water and determining compliance with national primary drinking water regulations. The Safe Drinking Water Act (SDWA) authorizes EPA to approve the use of alternative testing methods through publication in the **Federal Register**. EPA is using this streamlined authority to make 11 additional methods available for analyzing drinking water samples required by regulation. This expedited approach provides public water systems, laboratories, and primacy agencies with more timely access to new measurement techniques and greater flexibility in the selection of analytical methods, thereby reducing monitoring costs while maintaining public health protection.

DATES: This action is effective June 24, 2011.

FOR FURTHER INFORMATION CONTACT: Safe Drinking Water Hotline (800) 426–4791 or Glynda Smith, Technical Support Center, Standards and Risk Management Division, Office of Ground Water and Drinking Water (MS 140), Environmental Protection Agency, 26 West Martin Luther King Drive, Cincinnati, OH 45268; telephone number: (513) 569–7652; e-mail address: *smith.glynda@epa.gov.*

SUPPLEMENTARY INFORMATION:

I. General Information

A. Does this action apply to me?

Public water systems are the regulated entities required to measure contaminants in drinking water samples. In addition, EPA Regions as well as States and Tribal governments with authority to administer the regulatory program for public water systems under SDWA may also measure contaminants in water samples. When EPA sets a monitoring requirement in its national primary drinking water regulations for a given contaminant, the Agency also establishes in the regulations standardized test procedures for analysis of the contaminant. This action makes alternative testing methods available for particular drinking water contaminants beyond the testing methods currently established in the regulations. EPA is providing public water systems required to test water samples with a choice of using either a test procedure already established in the existing regulations or an alternative test procedure that has been approved in this action or in prior expedited approval actions. Categories and entities that may ultimately be affected by this action include:

Category	Examples of potentially regulated entities	NAICS [1]
State, Local, & Tribal Governments.	States, local and tribal governments that analyze water samples on behalf of public water systems required to conduct such analysis; States, local and tribal governments that themselves operate community and non-transient non-community water systems required to monitor.	924110
Industry	Private operators of community and non-transient non-community water systems required to monitor	221310
Municipalities	Municipal operators of community and non-transient non-community water systems required to monitor.	924110

[1] North American Industry Classification System.

This table is not exhaustive, but rather provides a guide for readers regarding entities likely to be affected by this action. This table lists the types of entities that EPA is now aware could potentially be affected by this action. Other types of entities not listed in the table could also be impacted. To determine whether your facility is

affected by this action, you should carefully examine the applicability language in the *Code of Federal Regulations* (CFR) at 40 CFR 141.2 (definition of public water system). If you have questions regarding the applicability of this action to a particular entity, consult the person listed in the preceding **FOR FURTHER INFORMATION CONTACT** section.

B. How can I get copies of this document and other related information?

Docket. EPA established a docket for this action under Docket ID No. EPA–HQ–OW–2011–0413. Publicly available docket materials are available either electronically through *http://www.regulations.gov* or in hard copy at the Water Docket in the EPA Docket Center, (EPA/DC) EPA West, Room 3334, 1301 Constitution Ave., NW., Washington, DC. Copyrighted materials are available only in hard copy. The EPA Docket Center Public Reading Room is open from 8:30 a.m. to 4:30 p.m., Monday through Friday, excluding legal holidays. The telephone number for the Public Reading Room is (202) 566–1744, and the telephone number for the Water Docket is (202) 566–2426.

Abbreviations and Acronyms Used in This Action

APHA: American Public Health Association
CFR: *Code of Federal Regulations*
EPA: Environmental Protection Agency
NAICS: North American Industry Classification System
NEMI: National Environmental Methods Index
QC: Quality Control
SDWA: Safe Drinking Water Act
VCSB: Voluntary Consensus Standard Bodies

II. Background

A. What is the purpose of this action?

In this action, EPA is approving 11 analytical methods for determining contaminant concentrations in samples collected under SDWA. Regulated parties required to sample and monitor may use either the testing methods already established in existing regulations or the alternative testing methods being approved in this action or in prior expedited approval actions. The new methods are listed in Appendix A to Subpart C of Part 141 and on EPA's drinking water methods Web site at *http://water.epa.gov/scitech/drinkingwater/labcert/analyticalmethods_expedited.cfm*.

This action also corrects the entry for dalapon in Appendix A to Subpart C of Part 141. In an earlier expedited methods approval action, Standard Methods 6640 B and 6640 B–01 were incorrectly listed under the same analytical methodology as EPA Method 557 for the determination of dalapon in drinking water. This action amends the dalapon entry to specify the appropriate methodology for each of these methods.

This action also revised entries in Appendix A to Subpart C of Part 141 for arsenic, barium, beryllium, cadmium, calcium, chromium, copper, lead, magnesium, nickel, selenium, silica, sodium, iron, manganese, and silver to include the footnote citation for EPA Method 200.5, Revision 4.2.

B. What is the basis for this action?

When EPA determines that an alternative analytical method is ''equally effective'' (i.e., as effective as a method that has already been promulgated in the regulations), SDWA allows EPA to approve the use of the alternative method through publication in the **Federal Register**. (See Section 1401(1) of SDWA.) EPA is using this streamlined approval authority to make 11 additional methods available for determining contaminant concentrations in samples collected under SDWA. EPA has determined that, for each contaminant or group of contaminants listed in Section III, the additional testing methods being approved in this action are as effective as one or more of the testing methods already approved in the regulations for those contaminants. Section 1401(1) of SDWA states that the newly approved methods ''shall be treated as an alternative for public water systems to the quality control and testing procedures listed in the regulation.'' Accordingly, this action makes these additional (and optional) 11 analytical methods legally available for meeting EPA's monitoring requirements.

This action does not add regulatory language, but does, for informational purposes, update an appendix to the regulations at 40 CFR Part 141 that lists all methods approved under Section 1401(1) of SDWA. Accordingly, while this action is not a rule, it is updating CFR text and therefore is being published in the ''Final Rules'' section of the **Federal Register**.

III. Summary of Approvals

EPA is approving 11 methods that are equally effective relative to methods previously promulgated in the regulations. By means of this notice, these 11 methods are added to Appendix A to Subpart C of 40 CFR Part 141.

A. Methods Developed by Voluntary Consensus Standard Bodies (VCSB)

1. Standard Methods for the Examination of Water and Wastewater (Standard Methods). EPA compared the most recent versions of four Standard Methods to earlier versions of those methods that are currently approved in 40 CFR 141 and 143. Changes between the earlier approved version and the most recent version of each method are summarized in Smith (2011). The revisions primarily involve editorial changes (i.e., corrections of errors, procedural clarifications, and reorganization of text). The revised methods are the same as the earlier approved versions with respect to the chemistry, sample handling protocols, and method performance data. The new versions are thus equally effective relative to those that are currently approved in the regulations. Therefore, EPA is approving the use of the four updated Standard Methods for the contaminants and their respective regulations listed in the following table:

Standard method revised version	Standard method currently approved version	Contaminant	Regulation
6651 B, 21st edition (APHA 2005)	6651 B, 20th edition (APHA 1998)	Glyphosate	40 CFR 141.24(e)(1).
6651 B–00, (APHA 2000)	6651 B, 20th edition (APHA 1998)	Glyphosate	40 CFR 141.24(e)(1).
3114 B–09 (APHA 2009)	3114 B–97 (APHA 1997)	Arsenic	40 CFR 141.23(k)(1).
		Selenium	40 CFR 141.23(k)(1).
3113 B–04 (APHA 2004)	3113 B, 19th edition (APHA 1995)	Antimony	40 CFR 141.23(k)(1).
		Arsenic	40 CFR 141.23(k)(1).
		Barium	40 CFR 141.23(k)(1).
		Beryllium	40 CFR 141.23(k)(1).
		Cadmium	40 CFR 141.23(k)(1).
		Chromium	40 CFR 141.23(k)(1).
		Copper	40 CFR 141.23(k)(1).
		Lead	40 CFR 141.23(k)(1).

Standard method revised version	Standard method currently approved version	Contaminant	Regulation
		Nickel	40 CFR 141.23(k)(1).
		Selenium	40 CFR 141.23(k)(1).
		Aluminum	40 CFR 143.4(b).
		Iron	40 CFR 143.4(b).
		Manganese	40 CFR 143.4(b).
		Silver	40 CFR 143.4(b).

Two additional Standard Methods, 6640 B, published in the 21st edition (APHA 2005), and its identical online version, 6640 B–01 (APHA 2001), were approved in a previous expedited methods approval action for determining dalapon in drinking water (75 FR 32295, June 8, 2010) (USEPA 2010). Standard Method 6640 B was developed directly from EPA Method 515.4 (USEPA 2000), and thus entails the identical sample collection/handling protocols, sample preparation and derivatization steps, chromatographic conditions, and detection. The method performance data (*e.g.,* detection levels, accuracy and precision) specified in Standard Method 6640 B and EPA Method 515.4 are identical. In addition to addressing dalapon, EPA Method 515.4 is also an approved method for analyzing drinking water compliance samples for 2,4–D, 2,4,5–TP (i.e., Silvex), dinoseb, pentachlorophenol, and picloram as cited at 40 CFR 141.24(e)(1). Therefore, in this action EPA is expanding approval of Standard Method 6640 B and Standard Method 6640 B–01 for determining 2,4–D, 2,4,5–TP (i.e., Silvex), dinoseb, pentachlorophenol, and picloram in drinking water. The 21st edition can be obtained from the American Public Health Association (APHA), 800 I Street, NW., Washington, DC 20001–3710. Online versions of Standard Methods are available at *http://www.standardmethods.org.*

2. ASTM International. EPA compared the most recent versions of three ASTM International methods to the earlier versions of those methods that are currently approved in 40 CFR 141. Changes between the earlier approved version and the most recent version of each method are summarized in Smith (2011). The revisions primarily involve editorial changes (*i.e.,* updated references, definitions, terminology, and reorganization of text). The revised methods are the same as the approved versions with respect to sample collection and handling protocols, sample preparation, analytical methodology, and method performance data. In addition, the revised version of the ASTM method for the radiochemical determination of uranium (ASTM Method D3972–09) expands the QC requirements beyond those required in the previous version. EPA has thus determined that the new versions are equally effective relative to those currently in the regulations. Therefore, EPA is approving the use of the three updated ASTM methods for the contaminants and their respective regulations listed in the following table:

ASTM revised version	ASTM approved version	Contaminant	Regulation
D1067–06 B (ASTM 2006)	D1067–02 B (ASTM 2002a)	Alkalinity	40 CFR 141.23(k)(1).
D6919–09 (ASTM 2009a)	D6919–03 (ASTM 2003)	Sodium	40 CFR 141.23(k)(1).
		Magnesium	40 CFR 141.23(k)(1).
		Calcium	40 CFR 141.23(k)(1).
D3972–09 (ASTM 2009b)	D3972–02 (ASTM 2002b)	Uranium	40 CFR 141.25(a).

The ASTM methods are available from ASTM International, 100 Barr Harbor Drive, West Conshohocken, PA 19428–2959 or *http://www.astm.org.*

B. Methods Developed by Vendors

1. Hach Company TNTplus™ 835/836 Nitrate Method 10206 (Hach Company 2011a). The Hach Company TNTplus 835/836 nitrate method 10206 uses spectrophotometric analysis to determine nitrate concentrations in drinking water. The method involves the following steps:

- Electrophilic substitution of the dimethylphenol reagent results in a colored nitro-dimethylphenol product, and
- Colorimetric measurement of the absorbance at 345 nm is directly proportional to the concentration of the nitrate in the sample.

The currently approved methods for nitrate are listed at 40 CFR 141.23(k)(1). An inter-laboratory study was conducted by the vendor to compare the method performance of the Hach Company TNTplus 835/836 nitrate method 10206 to the performance of three approved methods: EPA Method 353.2 (USEPA 1993a), EPA Method 300.0 (USEPA 1993b), and Standard Method 4500–NO_3^- E (APHA 1998). Three laboratories analyzed a variety of matrices (e.g., low ionic strength, high ionic strength, and drinking water samples derived from both surface water and ground water sources). The samples were analyzed for nitrate by running approved methods alongside the Hach Company TNTplus 835/836 nitrate method 10206. EPA has determined that the Hach Company TNTplus 835/836 nitrate method 10206 is as effective as EPA Method 353.2, EPA Method 300.0, and Standard Method 4500–NO_3^- E. The basis for this determination is discussed in the validation study report (Hach Company 2010a) which summarizes the results obtained from the inter-laboratory study. The method is also a ''green'' alternative to approved nitrate methods that use the toxic metal, cadmium. Therefore, EPA is approving the Hach Company TNTplus 835/836 nitrate method 10206 for determining nitrate concentrations in drinking water. The Hach Company TNTplus 835/836 nitrate method 10206 can be obtained from Hach Company, 5600 Lindbergh Drive, P.O. Box 389, Loveland, Colorado 80539, phone: (970) 669–3050.

2. Hach Company SPADNS 2 (Arsenic-free) Fluoride Method 10225 (Hach Company 2011b). The Hach Company SPADNS 2 (Arsenic-free) Fluoride Method 10225 uses spectrophotometric analysis to determine fluoride concentrations in drinking water. The currently approved method using SPADNS chemistry for determining fluoride concentrations, Standard Method 4500–F^- D (APHA 1998), is listed at 40 CFR 141.23(k)(1). As described in the approved method,

the presence of residual chlorine in water is a known interferent and the method specifies addition of sodium arsenite to quench the chlorine. The Hach Company SPADNS 2 (Arsenic-free) Fluoride Method 10225 replaces sodium arsenite with a proprietary non-toxic, non-hazardous chlorine scavenger. An inter-laboratory study was conducted by the vendor to compare the method performance of the Hach Company SPADNS 2 (Arsenic-free) Fluoride method 10225 to the performance of the approved SPADNS method. Three laboratories analyzed a variety of matrices (*e.g.,* low ionic strength, high ionic strength, distilled and undistilled chlorinated drinking water samples derived from both surface water and ground water sources). The samples were analyzed for fluoride by running the approved method alongside the Hach Company SPADNS 2 (Arsenic-free) Fluoride Method 10225. EPA has determined that the Hach Company SPADNS 2 (Arsenic-free) Fluoride Method 10225 is as effective as Standard Method 4500–F^- D. The basis for this determination is discussed in the validation study report (Hach Company 2010b) which summarizes the results obtained from the inter-laboratory study. Therefore, EPA is approving the Hach Company SPADNS 2 (Arsenic-free) Fluoride Method 10225 for determining fluoride concentrations in drinking water. The Hach Company SPADNS (Arsenic-free) Fluoride Method 10225 can be obtained from Hach Company, 5600 Lindbergh Drive, P.O. Box 389, Loveland, Colorado 80539, phone: (800) 227–4224.

IV. Statutory and Executive Order Reviews

As noted in Section II, under the terms of SDWA Section 1401(1), this streamlined method approval action is not a rule. Accordingly, the Congressional Review Act, 5 U.S.C. 801 et seq., as added by the Small Business Regulatory Enforcement Fairness Act of 1996, does not apply because this action is not a rule for purposes of 5 U.S.C. 804(3). Similarly, this action is not subject to the Regulatory Flexibility Act because it is not subject to notice and comment requirements under the Administrative Procedure Act or any other statute. In addition, because this approval action is not a rule but simply makes alternative (optional) testing methods available for monitoring under SDWA, EPA has concluded that other statutes and executive orders generally applicable to rulemaking do not apply to this approval action.

V. References

American Public Health Association (APHA). 1995. *19th Edition of Standard Methods for the Examination of Water and Wastewater,* American Public Health Association, 800 I Street, NW., Washington, DC 20001–3710.

American Public Health Association (APHA). 1997. Standard Method 3114 B–97. Arsenic and Selenium by Hydride Generation/Atomic Absorption Spectrometry. Manual Hydride Generation/Atomic Spectrometric Method. Approved by Standard Methods Committee 1997. Standard Methods Online. (Available at *http://www.standardmethods.org.*)

American Public Health Association (APHA). 1998. *20th Edition of Standard Methods for the Examination of Water and Wastewater,* American Public Health Association, 800 I Street, NW., Washington, DC 20001–3710.

American Public Health Association (APHA). 2000. Standard Method 6651 B–00. Glyphosate Herbicide. Liquid Chromatographic Post-Column Fluorescence Method. Approved by Standard Methods Committee 2000. Standard Methods Online. (Available at *http://www.standardmethods.org.*)

American Public Health Association (APHA). 2001. Standard Method 6640 B–01. Acidic Herbicide Compounds. Micro Liquid-Liquid Extraction Gas Chromatographic Method. Approved by Standard Methods Committee 2001. Standard Methods Online. (Available at *http://www.standardmethods.org.*)

American Public Health Association (APHA). 2004. Standard Method 3113 B–04. Metals by Electrothermal Atomic Absorption Spectrometry. Electrothermal Atomic Absorption Spectrometric Method. Approved by Standard Methods Committee 2004. Standard Methods Online. (Available at *http://www.standardmethods.org.*)

American Public Health Association (APHA). 2005. *21st Edition of Standard Methods for the Examination of Water and Wastewater,* American Public Health Association, 800 I Street, NW., Washington, DC 20001–3710.

American Public Health Association (APHA). 2009. Standard Method 3114 B–09. Arsenic and Selenium by Hydride Generation/Atomic Absorption Spectrometry. Manual Hydride Generation/Atomic Absorption Spectrometric Method. Approved by Standard Methods Committee 2009. Standard Methods Online. (Available at *http://www.standardmethods.org.*)

ASTM International. 2002a. ASTM D 1067–02 B. Standard Test Methods for Acidity or Alkalinity of Water. Method B—Electrometric or Color-Change Titration. ASTM International, 100 Barr Harbor Drive, West Conshohocken, PA 19428–2959. (Available at *http://www.astm.org.*)

ASTM International. 2002b. ASTM D 3972–02. Standard Test Method for Isotopic Uranium in Water by Radiochemistry. ASTM International, 100 Barr Harbor Drive, West Conshohocken, PA 19428–2959. (Available at *http://www.astm.org.*)

ASTM International. 2003. ASTM D 6919–03. Standard Test Method for Determination of Dissolved Alkali and Alkaline Earth Cations and Ammonium in Water and Wastewater by Ion Chromatography. ASTM International, 100 Barr Harbor Drive, West Conshohocken, PA 19428–2959. (Available at *http://www.astm.org.*)

ASTM International. 2006. ASTM D 1067–06 B. Standard Test Methods for Acidity or Alkalinity of Water. Method B—Electrometric or Color-Change Titration. ASTM International, 100 Barr Harbor Drive, West Conshohocken, PA 19428–2959. (Available at *http://www.astm.org.*)

ASTM International. 2009a. ASTM D 6919–09. Standard Test Method for Determination of Dissolved Alkali and Alkaline Earth Cations and Ammonium in Water and Wastewater by Ion Chromatography. ASTM International, 100 Barr Harbor Drive, West Conshohocken, PA 19428–2959. (Available at *http://www.astm.org.*)

ASTM International. 2009b. ASTM D 3972–09. Standard Test Method for Isotopic Uranium in Water by Radiochemistry. ASTM International, 100 Barr Harbor Drive, West Conshohocken, PA 19428–2959. (Available at *http://www.astm.org.*)

Hach Company. 2010a. ATP evaluation of the Hach Company TNTplus 835/836 Spectrometric Method for Measurement of Nitrate. November 2010. 5600 Lindbergh Drive, P.O. Box 389, Loveland, Colorado 80539.

Hach Company. 2010b. ATP evaluation of the Hach Company SPADNS 2 (Arsenic-free) Spectrophotometric Method for Measurement of Fluoride. August 2010. 5600 Lindbergh Drive, P.O. Box 389, Loveland, Colorado 80539.

Hach Company. 2011a. Hach Company TNTplus™ 835/836 Nitrate Method 10206—Spectrophotometric Measurement of Nitrate in Water and Wastewater. January 2011. 5600 Lindbergh Drive, P.O. Box 389, Loveland, Colorado 80539. (Available at *http://www.hach.com.*)

Hach Company. 2011b. Hach Company SPADNS 2 (Arsenic-free) Fluoride Method 10225—Spectrophotometric Measurement of Fluoride in Water and Wastewater. January 2011. 5600 Lindbergh Drive, P.O. Box 389, Loveland, Colorado 80539. (Available at *http://www.hach.com.*)

Smith, G. 2011. Memo to the record describing basis for expedited approval of updated methods from Standard Methods and ASTM International. February 01, 2011.

USEPA. 1993a. EPA Method 353.2, Revision 2.0, Determination of Nitrate-Nitrite Nitrogen by Automated Colorimetry, August 1993. (Available through NEMI at *https://www.nemi.gov/apex/f?p=237:1:1657930759454130.*)

USEPA. 1993b. EPA Method 300.0, Revision 2.1. Determination of Inorganic Anions by Ion Chromatography. August 1993. (Available through NEMI at *https://www.nemi.gov/apex/f?p=237:1:1657930759454130.*)

USEPA. 2000. EPA Method 515.4, Determination of Chlorinated Acids in Drinking Water by Liquid-Liquid Extraction, Derivatization, and Fast Gas Chromatography with Electron Capture Detection, EPA 815–B–00–001, April 2000. (Available at *http://water.epa.gov/scitech/drinkingwater/labcert/analyticalmethods_ogwdw.cfm*.)

USEPA. 2010. Expedited Approval of Alternative Test Procedures for the Analysis of Contaminants Under the Safe Drinking Water Act; Analysis and Sampling Procedures. 75 FR 32295. June 8, 2010.

List of Subjects in 40 CFR Part 141

Chemicals, Environmental protection, Indians—lands, Intergovernmental relations, Radiation protection, Reporting and recordkeeping requirements, Water supply.

Dated: June 16, 2011.

Cynthia C. Dougherty,

Director, Office of Ground Water and Drinking Water.

For the reasons stated in the preamble, 40 CFR Part 141 is amended as follows:

PART 141—NATIONAL PRIMARY DRINKING WATER REGULATIONS

■ 1. The authority citation for Part 141 continues to read as follows:

Authority: 42 U.S.C. 300f, 300g–1, 300j–4, and 300j–9.

■ 2. Appendix A to Subpart C of Part 141 is amended as follows:

■ a. By revising entries for ''Alkalinity,'' ''Antimony,'' ''Arsenic,'' ''Barium,'' ''Beryllium,'' ''Cadmium,'' ''Calcium,'' ''Chromium,'' ''Copper,'' ''Fluoride,'' ''Lead,'' ''Magnesium,'' ''Nickel,'' ''Nitrate,'' ''Selenium,'' ''Silica, '' and ''Sodium'' in the table entitled ''Alternative testing methods for contaminants listed at 40 CFR 141.23(k)(1).''

■ b. By revising the entry for ''Dalapon'' in the table entitled ''Alternative testing methods for contaminants listed at 40 CFR 141.24(e)(1).''

■ c. By adding entries for ''2,4–D'' and ''2,4,5–TP (Silvex)'' after the entry for ''Xylenes (total)'' in the table entitled ''Alternative testing methods for contaminants listed at 40 CFR 141.24(e)(1).''

■ d. By adding the entry for ''Dinoseb'' after the entry for ''Dibromochloropropane (DBCP)'' in the table entitled ''Alternative testing methods for contaminants listed at 40 CFR 141.24(e)(1).''

■ e. By adding the entry for ''Glyphosate'' after the entry for ''Ethyl dibromide (EDB)'' in the table entitled ''Alternative testing methods for contaminants listed at 40 CFR 141.24(e)(1).''

■ f. By adding entries for ''Pentachlorophenol'' and ''Picloram'' after the entry for ''Oxamyl'' in the table entitled ''Alternative testing methods for contaminants listed at 40 CFR 141.24(e)(1).''

■ g. By revising the entry for ''Uranium'' in the table entitled ''Alternative testing methods for contaminants listed at 40 CFR 141.25(a).''

■ h. By revising entries for ''Aluminum,'' ''Iron,'' ''Manganese,'' and ''Silver'' in the table entitled ''Alternative testing methods for contaminants listed at 40 CFR 143.4(b).''

Appendix A to Subpart C of Part 141—Alternative Testing Methods Approved for Analyses Under the Safe Drinking Water Act.

* * * * *

ALTERNATIVE TESTING METHODS FOR CONTAMINANTS LISTED AT 40 CFR 141.23(k)(1)

Contaminant	Methodology	EPA method	SM 21st edition [1]	SM online [3]	ASTM [4]	Other
Alkalinity	Titrimetric		2320 B		D 1067–06 B.	
Antimony	Hydride—Atomic Absorption				D 3697–07.	
	Atomic Absorption; Furnace		3113 B	3113 B–04.		
	Axially viewed inductively coupled plasma-atomic emission spectrometry (AVICP–AES).	200.5, Revision 4.2. [2]				
Arsenic	Atomic Absorption; Furnace		3113 B	3113 B–04	D 2972–08 C.	
	Hydride Atomic Absorption		3114 B	3114 B–09	D 2972–08 B.	
	Axially viewed inductively coupled plasma-atomic emission spectrometry (AVICP–AES).	200.5, Revision 4.2. [2]				
Barium	Inductively Coupled Plasma		3120 B.			
	Atomic Absorption; Direct		3111 D.			
	Atomic Absorption; Furnace		3113 B	3113 B–04.		
	Axially viewed inductively coupled plasma-atomic emission spectrometry (AVICP–AES).	200.5, Revision 4.2. [2]				
Beryllium	Inductively Coupled Plasma		3120 B.			
	Atomic Absorption; Furnace		3113 B	3113 B–04	D 3645–08 B.	
	Axially viewed inductively coupled plasma-atomic emission spectrometry (AVICP–AES).	200.5, Revision 4.2. [2]				
Cadmium	Atomic Absorption; Furnace		3113 B	3113 B–04.		
	Axially viewed inductively coupled plasma-atomic emission spectrometry (AVICP–AES).	200.5, Revision 4.2. [2]				
Calcium	EDTA titrimetric		3500–Ca B		D 511–09 A.	
	Atomic Absorption; Direct Aspiration.		3111 B		D 511–09 B.	
	Inductively Coupled Plasma		3120 B.			
	Axially viewed inductively coupled plasma-atomic emission spectrometry (AVICP–AES).	200.5, Revision 4.2. [2]				
	Ion Chromatography				D 6919–09.	
Chromium	Inductively Coupled Plasma		3120 B.			

ALTERNATIVE TESTING METHODS FOR CONTAMINANTS LISTED AT 40 CFR 141.23(k)(1)—Continued

Contaminant	Methodology	EPA method	SM 21st edition [1]	SM online [3]	ASTM [4]	Other
	Atomic Absorption; Furnace		3113 B	3113 B–04.		
	Axially viewed inductively coupled plasma-atomic emission spectrometry (AVICP–AES).	200.5, Revision 4.2. [2]				
Copper	Atomic Absorption; Furnace		3113 B	3113 B–04	D 1688–07 C.	
	Atomic Absorption; Direct Aspiration.		3111 B		D 1688–07 A.	
	Inductively Coupled Plasma		3120 B.			
	Axially viewed inductively coupled plasma-atomic emission spectrometry (AVICP–AES).	200.5, Revision 4.2. [2]				
*	* *	*	*	*	*	*
Fluoride	Ion Chromatography		4110 B.			
	Manual Distillation; Colorimetric SPADNS.		4500–F B, D.			
	Manual Electrode		4500–F–C		D 1179–04 B.	
	Automated Alizarin		4500–F–E			
	Arsenite-Free Colorimetric SPADNS.					Hach SPADNS 2 Method 10225.[22]
Lead	Atomic Absorption; Furnace		3113 B	3113 B–04	D 3559–08 D.	
	Axially viewed inductively coupled plasma-atomic emission spectrometry (AVICP–AES).	200.5, Revision 4.2. [2]				
Magnesium	Atomic Absorption; Direct		3111 B		D 511–09 B.	
	Inductively Coupled Plasma		3120 B.			
	Complexation Titrimetric Methods		3500–Mg B		D 511–09 A.	
	Axially viewed inductively coupled plasma-atomic emission spectrometry (AVICP–AES).	200.5, Revision 4.2. [2].				
	Ion Chromatography				D 6919–09.	
*	* *	*	*	*	*	*
Nickel	Inductively Coupled Plasma		3120 B.			
	Atomic Absorption; Direct		3111 B.			
	Atomic Absorption; Furnace		3113 B	3113 B–04.		
	Axially viewed inductively coupled plasma-atomic emission spectrometry (AVICP–AES).	200.5, Revision 4.2. [2]				
Nitrate	Ion Chromatography		4110 B.			
	Automated Cadmium Reduction		4500–NO_3–F.			
	Manual Cadmium Reduction		4500–NO_3–E.			
	Ion Selective Electrode		4500–NO_3–D.			
	Reduction/Colorimetric					Systea Easy (1–Reagent).[8]
	Colorimetric; Direct					Hach TNTplus™ 835/836 Method 10206. [23]
*	* *	*	*	*	*	*
Selenium	Hydride—Atomic Absorption		3114 B	3114 B–09	D 3859–08 A.	
	Atomic Absorption; Furnace		3113 B	3113 B–04	D 3859–08 B.	
	Axially viewed inductively coupled plasma-atomic emission spectrometry (AVICP–AES).	200.5, Revision 4.2. [2]				
Silica	Colorimetric				D859–05.	
	Molybdosilicate		4500–SiO_2 C.			
	Heteropoly blue		4500–SiO_2 D.			
	Automated for Molybdate-reactive Silica.		4500–SiO_2 E.			
	Axially viewed inductively coupled plasma-atomic emission spectrometry (AVICP–AES).	200.5, Revision 4.2. [2]				
	Inductively Coupled Plasma		3120 B.			
*	* *	*	*	*	*	*
Sodium	Atomic Absorption; Direct Aspiration.		3111 B.			

ALTERNATIVE TESTING METHODS FOR CONTAMINANTS LISTED AT 40 CFR 141.23(k)(1)—Continued

Contaminant	Methodology	EPA method	SM 21st edition [1]	SM online [3]	ASTM [4]	Other
	Axially viewed inductively coupled plasma-atomic emission spectrometry (AVICP–AES).	200.5, Revision 4.2. [2].				
	Ion Chromatography				D 6919–09.	
*	*	*	*	*	*	*

* * * * *

ALTERNATIVE TESTING METHODS FOR CONTAMINANTS LISTED AT 40 CFR 141.24(e)(1)

Contaminant	Methodology	EPA method	SM 21st edition [1]	SM online [3]
*	*	*	*	*
2,4-D	Gas Chromatography/Electron Capture Detection (GC/ECD)		6640 B	6640 B–01
2,4,5-TP (Silvex)	Gas Chromatography/Electron Capture Detection (GC/ECD)		6640 B	6640 B–01
*	*	*	*	*
Dalapon	Ion Chromatography Electrospray Ionization Tandem Mass Spectrometry (IC–ESI–MS/MS).	557 [14].		
	Gas Chromatography/Electron Capture Detection (GC/ECD)		6640 B	6640 B–01
*	*	*	*	*
Dinoseb	Gas Chromatography/Electron Capture Detection (GC/ECD)		6640 B	6640 B–01
*	*	*	*	*
Glyphosate	High-Performance Liquid Chromatography (HPLC) with Post-Column Derivatization and Fluorescence Detection.		6651 B	6651 B–00
*	*	*	*	*
Pentachlorophenol	Gas Chromatography/Electron Capture Detection (GC/ECD)		6640 B	6640 B–01
Picloram	Gas Chromatography/Electron Capture Detection (GC/ECD)		6640 B	6640 B–01
*	*	*	*	*

* * * * *

ALTERNATIVE TESTING METHODS FOR CONTAMINANTS LISTED AT 40 CFR 141.25(a)

Contaminant	Methodology	SM 21st edition [1]	ASTM [4]
Naturally Occurring:			
*	*	*	*
Uranium	Radiochemical	7500–U B.	
	ICP–MS		D5673–05
	Alpha spectrometry	7500–U C	D3972–09
	Laser Phosphorimetry		D5174–07
*	*	*	*

* * * * *

ALTERNATIVE TESTING METHODS FOR CONTAMINANTS LISTED AT 40 CFR 143.4(b)

Contaminant	Methodology	EPA method	ASTM [4]	SM 21st edition[1]	SM online [3]
Aluminum	Axially viewed inductively coupled plasma-atomic emission spectrometry (AVICP–AES).	200.5, Revision 4.2. [2]			
	Atomic Absorption; Direct			3111D.	
	Atomic Absorption; Furnace			3113 B	3113 B–04

ALTERNATIVE TESTING METHODS FOR CONTAMINANTS LISTED AT 40 CFR 143.4(b)—Continued

Contaminant	Methodology	EPA method	ASTM [4]	SM 21st edition [1]	SM online [3]
	Inductively Coupled Plasma			3120 B.	
*	* *	* *	*		*
Iron	Axially viewed inductively coupled plasma-atomic emission spectrometry (AVICP–AES).	200.5, Revision 4.2. [2].			
	Atomic Absorption; Direct			3111 B.	
	Atomic Absorption; Furnace			3113 B	3113 B–04
	Inductively Coupled Plasma			3120 B.	
Manganese	Axially viewed inductively coupled plasma-atomic emission spectrometry (AVICP–AES).	200.5, Revision 4.2. [2]			
	Atomic Absorption; Direct			3111 B.	
	Atomic Absorption; Furnace			3113 B	3113 B–04
	Inductively Coupled Plasma			3120 B.	
*	* *	* *	*		*
Silver	Axially viewed inductively coupled plasma-atomic emission spectrometry (AVICP–AES).	200.5, Revision 4.2. [2]			
	Atomic Absorption; Direct			3111 B.	
	Atomic Absorption; Furnace			3113 B	3113 B–04
	Inductively Coupled Plasma			3120 B.	
*	* *	* *	*		*

* * * * *

[1] *Standard Methods for the Examination of Water and Wastewater,* 21st edition (2005). Available from American Public Health Association, 800 I Street, NW., Washington, DC 20001–3710.

[2] EPA Method 200.5, Revision 4.2. "Determination of Trace Elements in Drinking Water by Axially Viewed Inductively Coupled Plasma-Atomic Emission Spectrometry." 2003. EPA/600/R–06/115. (Available at *http://www.epa.gov/nerlcwww/ordmeth.htm.*)

[3] Standard Methods Online are available at *http://www.standardmethods.org.* The year in which each method was approved by the Standard Methods Committee is designated by the last two digits in the method number. The methods listed are the only online versions that may be used.

[4] Available from ASTM International, 100 Barr Harbor Drive, West Conshohocken, PA 19428–2959 or *http://astm.org.* The methods listed are the only alternative versions that may be used.

* * * * *

[8] Systea Easy (1–Reagent). "Systea Easy (1–Reagent) Nitrate Method," February 4, 2009. Available at *https://www.nemi.gov/apex/f?p=237:1:1150314317898177* or from Systea Scientific, LLC., 900 Jorie Blvd., Suite 35, Oak Brook, IL 60523.

* * * * *

[14] EPA Method 557. "Determination of Haloacetic Acids, Bromate, and Dalapon in Drinking Water by Ion Chromatography Electrospray Ionization Tandem Mass Spectrometry (IC–ESI–MS/MS)," September 2009. EPA 815–B–09–012. Available at *http://water.epa.gov/scitech/drinkingwater/labcert/analyticalmethods_expedited.cfm.*

* * * * *

[22] Hach Company Method, "Hach Company SPADNS 2 (Arsenic-free) Fluoride Method 10225—Spectrophotometric Measurement of Fluoride in Water and Wastewater," January 2011. 5600 Lindbergh Drive, P.O. Box 389, Loveland, Colorado 80539. (Available at *http://www.hach.com.*)

[23] Hach Company Method, "Hach Company TNTplus™ 835/836 Nitrate Method 10206—Spectrophotometric Measurement of Nitrate in Water and Wastewater," January 2011. 5600 Lindbergh Drive, P.O. Box 389, Loveland, Colorado 80539. (Available at *http://www.hach.com.*)

[FR Doc. 2011–15629 Filed 6–23–11; 8:45 am]

BILLING CODE 6560–50–P

ENVIRONMENTAL PROTECTION AGENCY

40 CFR Part 271

[EPA–R06–RCRA–2010–0307; FRL–9323–9]

Louisiana: Final Authorization of State Hazardous Waste Management Program Revision

AGENCY: Environmental Protection Agency (EPA).

ACTION: Immediate final rule.

SUMMARY: Louisiana has applied to the EPA for final authorization of the changes to its hazardous waste program under the Resource Conservation and Recovery Act (RCRA). The EPA has determined that these changes satisfy all requirements needed to qualify for final authorization, and is authorizing the State's changes through this immediate final action. The EPA is publishing this rule to authorize the changes without a prior proposal because we believe this action is not controversial and do not expect comments that oppose it. Unless we receive written comments which oppose this authorization during the comment period, the decision to authorize Louisiana's changes to its hazardous waste program will take effect. If we receive comments that oppose this action, we will publish a document in the **Federal Register** withdrawing this rule before it takes effect, and a separate document in the proposed rules section of this **Federal Register** will serve as a proposal to authorize the changes.

DATES: This final authorization will become effective on August 23, 2011 unless the EPA receives adverse written comment by July 25, 2011. If the EPA receives such comment, it will publish a timely withdrawal of this immediate final rule in the **Federal Register** and inform the public that this authorization will not take effect.

ADDRESSES: Submit your comments by one of the following methods:

1. *Federal eRulemaking Portal: http://www.regulations.gov.* Follow the on-line instructions for submitting comments.
2. *E-mail: patterson.alima@epa.gov.*
3. *Mail:* Alima Patterson, Region 6, Regional Authorization Coordinator, State/Tribal Oversight Section (6PD–O), Multimedia Planning and Permitting Division, EPA Region 6, 1445 Ross Avenue, Dallas Texas 75202–2733.
4. *Hand Delivery or Courier:* Deliver your comments to Alima Patterson, Region 6, Regional Authorization Coordinator, State/Tribal Oversight

Section (6PD–O), Multimedia Planning and Permitting Division, EPA Region 6, 1445 Ross Avenue, Dallas Texas 75202–2733.

Instructions: Do not submit information that you consider to be CBI or otherwise protected through regulations.gov, or e-mail. The Federal regulations.gov Web site is an ''anonymous access'' system, which means the EPA will not know your identity or contact information unless you provide it in the body of your comment. If you send an e-mail comment directly to the EPA without going through regulations.gov, your e-mail address will be automatically captured and included as part of the comment that is placed in the public docket and made available on the Internet. If you submit an electronic comment, the EPA recommends that you include your name and other contact information in the body of your comment and with any disk or CD–ROM you submit. If the EPA cannot read your comment due to technical difficulties and cannot contact you for clarification, the EPA may not be able to consider your comment. Electronic files should avoid the use of special characters, any form of encryption, and be free of any defects or viruses. You can view and copy Louisiana's application and associated publicly available materials from 8:30 a.m. to 4 p.m. Monday through Friday at the following locations: Louisiana Department of Environmental Quality, 602 N. Fifth Street, Baton Rouge, Louisiana 70884–2178, phone number (225) 219–3559 and EPA, Region 6, 1445 Ross Avenue, Dallas, Texas 75202–2733, phone number (214) 665–8533. Interested persons wanting to examine these documents should make an appointment with the office at least two weeks in advance.

FOR FURTHER INFORMATION CONTACT: Alima Patterson, Region 6, Regional Authorization Coordinator, State/Tribal Oversight Section (6PD–O), Multimedia Planning and Permitting Division, EPA Region 6, 1445 Ross Avenue, Dallas Texas 75202–2733, (214) 665–8533) and E-mail address *patterson.alima@epa.gov.*

SUPPLEMENTARY INFORMATION:

A. Why are revisions to State programs necessary?

States which have received final authorization from the EPA under RCRA section 3006(b), 42 U.S.C. 6926(b), must maintain a hazardous waste program that is equivalent to, consistent with, and no less stringent than the Federal program. As the Federal program changes, States must change their programs and ask the EPA to authorize the changes. Changes to State programs may be necessary when Federal or State statutory or regulatory authority is modified or when certain other changes occur.

Most commonly, States must change their programs because of changes to the EPA's regulations in 40 Code of Federal Regulations (CFR) parts 124, 260 through 268, 270, 273, and 279.

B. What decisions have we made in this rule?

We conclude that Louisiana's application to revise its authorized program meets all of the statutory and regulatory requirements established by RCRA. Therefore, we grant Louisiana final authorization to operate its hazardous waste program with the changes described in the authorization application. Louisiana has responsibility for permitting treatment, storage, and disposal facilities within its borders (except in Indian Country) and for carrying out the aspects of the RCRA program described in its revised program application, subject to the limitations of the Hazardous and Solid Waste Amendments of 1984 (HSWA). New Federal requirements and prohibitions imposed by Federal regulations that the EPA promulgates under the authority of HSWA take effect in authorized States before they are authorized for the requirements. Thus, the EPA will implement those requirements and prohibitions in Louisiana including issuing permits, until the State is granted authorization to do so.

C. What is the effect of today's authorization decision?

The effect of this decision is that a facility in Louisiana subject to RCRA will now have to comply with the authorized State requirements instead of the equivalent Federal requirements in order to comply with RCRA. Louisiana has enforcement responsibilities under its State hazardous waste program for violations of such program, but the EPA retains its authority under RCRA sections 3007, 3008, 3013, and 7003, which include, among others, authority to:

- Do inspections, and require monitoring, tests, analyses, or reports;
- Enforce RCRA requirements and suspend or revoke permits and
- Take enforcement actions after notice to and consultation with the State.

This action does not impose additional requirements on the regulated community because the regulations for which Louisiana is being authorized by today's action are already effective under State law, and are not changed by today's action.

D. Why wasn't there a proposed rule before today's rule?

The EPA did not publish a proposal before today's rule because we view this as a routine program change and do not expect comments that oppose this approval. We are providing an opportunity for public comment now. In addition to this rule, in the proposed rules section of today's **Federal Register** we are publishing a separate document that proposes to authorize the State program changes.

E. What happens if the EPA receives comments that oppose this action?

If the EPA receives comments that oppose this authorization, we will withdraw this rule by publishing a document in the **Federal Register** before the rule becomes effective. The EPA will base any further decision on the authorization of the State program changes on the proposal mentioned in the previous paragraph. We will then address all public comments in a later final rule. You may not have another opportunity to comment. If you want to comment on this authorization, you must do so at this time. If we receive comments that oppose only the authorization of a particular change to the State hazardous waste program, we will withdraw only that part of this rule, but the authorization of the program changes that the comments do not oppose will become effective on the date specified above. The **Federal Register** withdrawal document will specify which part of the authorization will become effective, and which part is being withdrawn.

F. For what has Louisiana previously been authorized?

The State of Louisiana initially received final authorization on February 7, 1985, (50 FR 3348), to implement its base Hazardous Waste Management Program. We granted authorization for changes to their program on November 28, 1989 (54 FR 48889) effective January 29, 1990; August 26, 1991 (56 FR 41958) effective August 26, 1991; November 7, 1994 (59 FR 55368) effective January 23, 1995; December 23, 1994 (59 FR 66200) effective March 8, 1995; there were technical corrections made on January 23, 1995 (60 FR 4380), effective January 23, 1995; and another technical correction was made on April 11, 1995 (60 FR 18360) effective April 11, 1995; October 17, 1995 (60 FR 53704) effective January 2, 1996; March 28, 1996 (61 FR

13777) effective June 11, 1996; December 29, 1997 (62 FR 67572) effective March 16, 1998; October 23, 1998 (63 FR 56830) effective December 22, 1998; August 25, 1999 (64 FR 46302) effective October 25, 1999; September 2, 1999 (64 FR 48099) effective November 1, 1999; February 28, 2000 (65 FR 10411) effective April 28, 2000; January 2, 2001 (66 FR 23) effective March 5, 2001; December 9, 2003 (68 FR 68526) effective February 9, 2004, June 10, 2005 (70 FR 33852) effective August 9, 2005; November 13, 2006 (71 FR 66116) effective January 12, 2007, August 16, 2007 (72 FR 45905) effective October 15, 2007 and May 20, 2009 (74 FR 23645) effective July 20, 2009. On January 29, 2010, Louisiana applied for approval of its program revisions for RCRA Cluster XVIII including Checklist 209 (Universal Waste Rule: Specific Provisions for Mercury-Containing Equipment).

In this application, Louisiana is seeking approval for RCRA Checklists 209 and 216 through 218 in accordance with 40 CFR 271.21(b)(3).

Since 1979 through the Environmental Affairs Act, Act 449 enabled the Office of Environmental Affairs within the Louisiana Department of Natural Resources, as well as, the Environmental Control Commission to conduct an effective program designed to regulate those who generate, transport, treat, store, dispose or recycle hazardous waste. During the 1983 Regular Session of the Louisiana Legislature, Act 97 was adopted, which amended and reenacted La. R. S. 30:1051 *et seq.* as the Environmental Quality Act, renaming the Environmental Affairs Act (Act 1938 of 1979). This Act created Louisiana Department of Environmental Quality (LDEQ), including provisions for new offices within this new Department of Environmental Quality. Act 97 also transferred the duties and responsibilities previously delegated to the Department of Natural Resources, Office of Environmental Affairs, to the new Department. The LDEQ has lead agency jurisdictional authority for administering the Resource Recovery and Conservation Act (RCRA) Subtitle C program in Louisiana. Also, the LDEQ is designated to facilitate communication between the EPA and the State. During the 1999 Regular Session of Louisiana Legislature, Act 303 revised the La.R.S.30:2011 *et. seq.* allowing LDEQ to reengineer the Department to perform more efficiently and to meet its strategic goals.

It is the intention of the State, through this application, to demonstrate its equivalence and consistency with the Federal statutory tests, which are outlined in the United States Environmental Protection Agency regulatory requirements under 40 CFR 271, Subpart A, for final authorization. The submittal of this application is in keeping with the spirit and intent of RCRA, which provides equivalent States the opportunity to apply for final authorization to operate all aspects of their hazardous waste management programs in lieu of the Federal government. The Louisiana Environmental Quality Act authorizes the State's program, Subtitle II of Title 30 of the Louisiana Revised Statutes. With this application Louisiana is applying for authorization for specific areas of the State regulations identified as requiring authorization and the listed Checklists are: 209, 216, 217 and 218 will allow the State to implement the equivalent RCRA Subtitle C portion of the program. Louisiana has demonstrated to EPA that its program was substantially equivalent in its management of hazardous waste to the Federal program developed pursuant to RCRA.

G. What changes are we authorizing with today's action?

On January 29, 2010 Louisiana submitted a final complete program revision application, seeking authorization of their changes in accordance with 40 CFR 271.21. We now make an immediate final decision, subject to receipt of written comments that oppose this action, that Louisiana's hazardous waste program revision satisfies all of the requirements necessary to qualify for Final authorization. Therefore, we grant the State of Louisiana Final authorization for the following changes: The State of Louisiana's program revisions consist of regulations which specifically govern RCRA Cluster XVIII including Cluster XVI Checklist 209 as documented in this **Federal Register**:

Description of Federal requirement (include checklist #, if relevant)	Federal Register date and page (and/or RCRA statutory authority)	Analogous state authority
1. Universal Waste Rule: Specific Provisions for Mercury Containing Equipment. (Checklist 209).	70 FR 45508–45522 August 5, 2005.	Louisiana Revised Statutes (LRS) 30: Section 2001 *et seq.,* with specific cites of 2174, 2175, and 2180 effective December 31, 2004; Louisiana Environmental Regulatory Code, 33 Part V. Subpart 1 Hazardous Waste and Hazardous Materials Sections 3813, 105.D.7.c 1501.C.11.c, 4301.C.13.c, 2201.I.5.c, 305.C.11.c, 3801.A, 3807.A–B, 3807.B.1–2, 3807.C.1–2, 3813, 3821.C, 3821.C.1–2, 3821.C.2, 3821.C.2.a–c, 3821.C.2.d–g, 3821.C.2.h, 3821.C.4, 3821.C.4.a–b, 3821.C.3, 3821.C.3.a–b, 3823.A.4, 3823.A.5, 3841.B.4–5, 3843.C, 3843.C.1–2, 3843.C.2.a–c, 3843.C.2.d–g, 3843.C.2.h, 3843.C.4, 3843.C.4.a–b, 3843.C.3, 3843.C.3.a–b, and 3845.A.4–5, as amended December 20, 2005, effective September 20, 2009.
2. Exclusion of Oil-Bearing Secondary Materials Processed in a Gasification System to Produce Synthesis Gas. (Checklist 216).	73 FR 57–72 January 2, 2008.	Louisiana Revised Statutes (LRS) 30: Section 2001 *et seq.,* with specific cites of 2174, 2175, and 2180 effective December 31, 2004; Louisiana Environmental Regulatory Code, 33 Part V. Subpart 1 Hazardous Waste and Hazardous Materials Sections 109, 109, see definition for Gasification, and 105.D.1.l.i, as amended December 20, 2005, effective June 20, 2009.
3. NESHAP: Final Standards for Hazardous Waste Combustors (Phase I Final Replacement Standards and Phase II) Amendments. (Checklist 217).	73 FR 18970–18984 April 8, 2008.	Louisiana Revised Statutes (LRS) 30: Section 2001 *et seq.,* with specific cites of 2174, 2175, and 2180 effective December 31, 2004; Louisiana Environmental Regulatory Code, 33 Part V. Subpart 1 Hazardous Waste and Hazardous Materials Sections 3105.B.1 and 3001.B.3, as amended December 20, 2005, effective June 20, 2009.

Description of Federal requirement (include checklist #, if relevant)	Federal Register date and page (and/or RCRA statutory authority)	Analogous state authority
4. F019 Exemption for Wastewater Treatment Sludges from Auto Manufacturing Zinc Phosphating Processes. (Checklist 218).	73 FR 31756–31769 June 4, 2008.	Louisiana Revised Statutes (LRS) 30: Section 2001 *et seq.,* with specific cites of 2174, 2175, and 2180 effective December 31, 2004; Louisiana Environmental Regulatory Code, 33 Part V. Subpart 1 Hazardous Waste and Hazardous Materials Sections Chapter 49 Table 1, 4901.B.Table.1, 4901.B.2.d and 4901.B.2.d.i–ii, as amended December 20, 2005, effective June 20, 2009.

H. Where are the revised State rules different from the Federal rules?

In this authorization of the State of Louisiana program revisions for Cluster XVIII rules, there are no provisions that are more stringent or broader in scope.

I. Who handles permits after the authorization takes effect?

Louisiana will issue permits for all the provisions for which it is authorized and will administer the permits it issues. The EPA will continue to administer any RCRA hazardous waste permits or portions of permits which we issued prior to the effective date of this authorization. We will not issue any more new permits or new portions of permits for the provisions listed in the Table in this document after the effective date of this authorization. The EPA will continue to implement and issue permits for HSWA requirements for which Louisiana is not yet authorized.

J. How does today's action affect Indian Country in Louisiana?

Louisiana is not authorized to carry out its Hazardous Waste Program in Indian Country within the State. This authority remains with EPA. Therefore, this action has no effect in Indian Country.

K. What is codification and is the EPA codifying Louisiana's hazardous waste program as authorized in this rule?

Codification is the process of placing the State's statutes and regulations that comprise the State's authorized hazardous waste program into the CFR. We do this by referencing the authorized State rules in 40 CFR part 272. We reserve the amendment of 40 CFR part 272, subpart T for this authorization of Louisiana's program changes until a later date. In this authorization application the EPA is not codifying the rules documented in this **Federal Register** notice.

L. Statutory and Executive Order Reviews

The Office of Management and Budget (OMB) has exempted this action from the requirements of Executive Order 12866 (58 FR 51735, October 4, 1993), and therefore this action is not subject to review by OMB. This action authorizes State requirements for the purpose of RCRA 3006 and imposes no additional requirements beyond those imposed by State law. Accordingly, I certify that this action will not have a significant economic impact on a substantial number of small entities under the Regulatory Flexibility Act (5 U.S.C. 601 *et seq.*). Because this action authorizes preexisting requirements under State law and does not impose any additional enforceable duty beyond that required by State law, it does not contain any unfunded mandate or significantly or uniquely affect small governments, as described in the Unfunded Mandates Reform Act of 1995 (Pub. L. 104–4). For the same reason, this action also does not significantly or uniquely affect the communities of Tribal governments, as specified by Executive Order 13175 (65 FR 67249, November 9, 2000). This action will not have substantial direct effects on the States, on the relationship between the national government and the States, or on the distribution of power and responsibilities among the various levels of government, as specified in Executive Order 13132 (64 FR 43255, August 10, 1999), because it merely authorizes State requirements as part of the State RCRA hazardous waste program without altering the relationship or the distribution of power and responsibilities established by RCRA. This action also is not subject to Executive Order 13045 (62 FR 19885, April 23, 1997), because it is not economically significant and it does not make decisions based on environmental health or safety risks. This rule is not subject to Executive Order 13211, ''Actions Concerning Regulations That Significantly Affect Energy Supply, Distribution, or Use'' (66 FR 28355 (May 22, 2001)) because it is not a significant regulatory action under Executive Order 12866.

Under RCRA 3006(b), the EPA grants a State's application for authorization as long as the State meets the criteria required by RCRA. It would thus be inconsistent with applicable law for the EPA, when it reviews a State authorization application, to require the use of any particular voluntary consensus standard in place of another standard that otherwise satisfies the requirements of RCRA. Thus, the requirements of section 12(d) of the National Technology Transfer and Advancement Act of 1995 (15 U.S.C. 272 note) do not apply. As required by section 3 of Executive Order 12988 (61 FR 4729, February 7, 1996), in issuing this rule, the EPA has taken the necessary steps to eliminate drafting errors and ambiguity, minimize potential litigation, and provide a clear legal standard for affected conduct. The EPA has complied with Executive Order 12630 (53 FR 8859, March 15, 1988) by examining the takings implications of the rule in accordance with the ''Attorney General's Supplemental Guidelines for the Evaluation of Risk and Avoidance of Unanticipated Takings'' issued under the Executive Order. This rule does not impose an information collection burden under the provisions of the Paperwork Reduction Act of 1995 (44 U.S.C. 3501 *et seq.*).

The Congressional Review Act, 5 U.S.C. 801 *et seq.,* as added by the Small Business Regulatory Enforcement Fairness Act of 1996, generally provides that before a rule may take effect, the agency promulgating the rule must submit a rule report, which includes a copy of the rule, to each House of the Congress and to the Comptroller General of the United States. The EPA will submit a report containing this document and other required information to the U.S. Senate, the U.S. House of Representatives, and the Comptroller General of the United States prior to publication in the **Federal Register**. A major rule cannot take effect until 60 days after it is published in the **Federal Register**. This action is not a ''major rule'' as defined by 5 U.S.C. 804(2). This action will be effective August 23, 2011.

List of Subjects in 40 CFR Part 271

Environmental protection, Administrative practice and procedure, Confidential business information, Hazardous waste, Hazardous waste transportation, Indian lands, Intergovernmental relations, Penalties,

Reporting and recordkeeping requirements.

Authority: This action is issued under the authority of sections 2002(a), 3006, and 7004(b) of the Solid Waste Disposal Act as amended 42 U.S.C. 6912(a), 6926, 6974(b).

Dated: June 8, 2011.

Al Armendariz,

Regional Administrator. Region 6.

[FR Doc. 2011–15876 Filed 6–23–11; 8:45 am]

BILLING CODE 6560–50–P

DEPARTMENT OF TRANSPORTATION

National Highway Traffic Safety Administration

49 CFR Part 595

[Docket No. NHTSA–2011–0079]

RIN 2127–AK77

Make Inoperative Exemptions; Vehicle Modifications To Accommodate People With Disabilities, Side Impact Protection

AGENCY: National Highway Traffic Safety Administration (NHTSA), Department of Transportation (DOT).

ACTION: Final rule.

SUMMARY: This final rule amends regulations concerning vehicle modifications which accommodate people with disabilities to update and expand a reference in an exemption relating to the Federal motor vehicle safety standard for side impact protection. The expanded exemption facilitates the mobility of drivers and passengers with disabilities.

DATES: *Effective Date:* August 23, 2011. As this final rule relieves the regulatory burdens on certain entities and involves Federal Motor Vehicle Safety Standard (FMVSS) requirements that have recently become effective, the agency believes that the above effective date is appropriate.

Petitions for Reconsideration: Petitions for reconsideration of this final rule must be received by the agency by August 8, 2011.

ADDRESSES: If you wish to petition for reconsideration of this rule, you should refer in your petition to the docket number of this document and submit your petition to: Administrator, National Highway Traffic Safety Administration, 1200 New Jersey Avenue, SE., West Building, Washington, DC 20590. The petition will be placed in the docket. Anyone is able to search the electronic form of all documents received into any of our dockets by the name of the individual submitting the comment (or signing the comment, if submitted on behalf of an association, business, labor union, *etc.*). You may review DOT's complete Privacy Act Statement in the **Federal Register** published on April 11, 2000 (Volume 65, Number 70; Pages 19477–78).

For access to the docket to read background documents or comments received, go to *http://www.regulations.gov* and follow the online instructions for accessing the docket. You may also visit DOT's Docket Management Facility, 1200 New Jersey Avenue, SE., West Building Ground Floor, Room W12–140, Washington, DC 20590–0001 for access to the docket.

FOR FURTHER INFORMATION CONTACT: Gayle Dalrymple, NHTSA Office of Crash Avoidance Standards, NVS–123, telephone (202–366–5559), fax (202–493–2739), or Jesse Chang, NHTSA Office of Chief Counsel, NCC–112, telephone (202–366–2992), fax (202–366–3820). The mailing address for these officials is: National Highway Traffic Safety Administration, 1200 New Jersey Avenue, SE., Washington, DC 20590.

SUPPLEMENTARY INFORMATION: This final rule amends 49 CFR Part 595, Subpart C, ''Make Inoperative Exemptions, Vehicle Modifications to Accommodate People With Disabilities,'' to update and expand a reference in an exemption relating to FMVSS No. 214. The notice of proposed rulemaking (NPRM) on which this final rule is based was published on September 28, 2010 (75 FR 59674) (Docket No. NHTSA–2010–0133).

Regulatory Background

The National Traffic and Motor Vehicle Safety Act (49 U.S.C. Chapter 301) (''Safety Act'') and NHTSA's regulations require vehicle manufacturers to certify that their vehicles comply with all applicable Federal motor vehicle safety standards (FMVSSs) (*see* 49 U.S.C. 30112; 49 CFR Part 567). A vehicle manufacturer, distributor, dealer, or repair business generally may not knowingly make inoperative any part of a device or element of design installed in or on a motor vehicle in compliance with an applicable FMVSS (*see* 49 U.S.C. 30122). NHTSA has the authority to issue regulations that exempt regulated entities from the ''make inoperative'' provision (49 U.S.C. 30122(c)). The agency has used that authority to promulgate 49 CFR Part 595 Subpart C, ''Make Inoperative Exemptions, Vehicle Modifications to Accommodate People with Disabilities.''

49 CFR Part 595 Subpart C sets forth exemptions from the make inoperative provision to permit, under limited circumstances, vehicle modifications that take the vehicles out of compliance with certain FMVSSs when the vehicles are modified to be used by persons with disabilities after the first retail sale of the vehicle for purposes other than resale. The regulation was promulgated to facilitate the modification of motor vehicles so that persons with disabilities can drive or ride in them. The regulation involves information and disclosure requirements and limits the extent of modifications that may be made.

Under the regulation, a motor vehicle repair business that modifies a vehicle to enable a person with a disability to operate or ride as a passenger in the motor vehicle and that avails itself of the exemption provided by 49 CFR Part 595 Subpart C must register itself with NHTSA. The modifier is exempted from the make inoperative provision of the Safety Act, but only to the extent that the modifications affect the vehicle's compliance with the FMVSSs specified in 49 CFR 595.7(c) and only to the extent specified in 595.7(c). Modifications that would take the vehicle out of compliance with any other FMVSS, or with an FMVSS listed in 595.7(c) but in a manner not specified in that paragraph are not exempted by the regulation. The modifier must affix a permanent label to the vehicle identifying itself as the modifier and the vehicle as no longer complying with all FMVSS in effect at original manufacture, and must provide and retain a document listing the FMVSSs with which the vehicle no longer complies and indicating any reduction in the load carrying capacity of the vehicle of more than 100 kilograms (220 pounds).

2007 Amendments to FMVSS 214 and Effects on Exemption in Part 595 Subpart C

Before today's final rule, 49 CFR Part 595 Subpart C set forth an exemption from ''S5 of 49 CFR 571.214 [FMVSS No. 214] for the designated seating position modified, in any cases in which the restraint system and/or seat at that position must be changed to accommodate a person with a disability.'' 49 CFR 595.7(c)(15). However, the reference to S5 of FMVSS No. 214 became outdated as a result of a 2007 amendment to Standard 214. Prior to 2007, S5 had referred to the dynamic performance requirements that vehicles must meet when subjected to a

moving deformable barrier (MDB) test.[1] In 2007, NHTSA upgraded FMVSS No. 214 and reorganized the standard.[2] The MDB test was redesignated from S5 to S7 and was upgraded with the adoption of new technically-advanced test dummies representing a 5th percentile adult female and a 50th percentile adult male and enhanced injury criteria.

In addition, the 2007 rule added a new vehicle-to-pole test to the standard (*see* S9, 49 CFR 571.214). The pole test simulates a vehicle crashing sideways into narrow fixed objects, such as utility poles and trees. The pole test requires vehicle manufacturers to assure head and improved chest protection in side crashes for a wide range of occupant sizes and over a broad range of seating positions. Manufacturers are meeting the upgraded requirements of the standard by vehicle modifications that include installing side air bags in vehicle seats and/or door panels and side roof rails. The phase-in of the upgraded MDB and pole test requirements began on September 1, 2010.

Petition for Rulemaking

On February 12, 2009, Bruno Independent Living Aids (Bruno) submitted a petition for rulemaking to expand the specified requirements of FMVSS No. 214 referenced in § 595.7. Bruno manufactures a product line called ''Turning Automotive Seating (TAS)'' which replaces the seat installed by the original equipment manufacturer (OEM). Bruno believes that their product affords disabled persons a safer method of vehicle entry and exit when compared to using a platform lift or entering and exiting unassisted. However, in their petition, Bruno expressed concern that: ''* * * torso side air bags are commonly installed in the outboard side of the OEM seat backrest'' and would be removed when installing a TAS system. For these reasons, Bruno sought in their petition to update Part 595 to maintain a similar exemption from the MDB test (to reflect the new designation under S7), and to expand Part 595 to allow an exemption from the new S9 vehicle-to-pole test requirements.

NPRM and Response

On September 28, 2010, NHTSA published an NPRM in the **Federal Register**. In that document, we proposed to amend § 595.7(c)(15) to reference the upgraded MDB requirements and to expand the exemption to include the pole test requirements. In support of the NPRM, the agency expressed the belief that, due to the nature of the modifications, there exists a continuing need for exemption from the MDB requirements and that there is a need to exempt vehicles modified to accommodate disabled persons from the pole test requirements.

We recognized in the NPRM that the proposed exemption presents a trade-off of substantial side impact protection in exchange for continued mobility for people with disabilities and some enhancement in easier and possibly safer vehicle entry and exit.[3] Thus, we requested comments on how the agency should proceed in order to achieve the maximum safety benefit with the narrowest exemption possible to accommodate the needs of disabled persons. However, the agency received no comments on the NPRM.

The Final Rule

The agency remains concerned about the negative effect an exemption may have on the safety benefits afforded to disabled persons who require modifications to their vehicles. However, we are unaware at this time of any other reasonable alternatives that can appropriately balance the mobility needs of people who must have vehicle modifications to accommodate a disability with the MDB and pole test requirements of FMVSS No. 214. Thus, for the reasons provided in the NPRM, we amend § 595.7(c)(15) to add references to both S7 and S9 and to remove any reference to S5.

MDB Test Requirements

Since § 595.7(c)(15)'s reference to S5 is no longer valid, today's final rule updates that paragraph's reference from S5 to S7. We believe that there is a continuing need for the exemption from the MDB requirements. Since the upgraded FMVSS No. 214 incorporates enhanced MDB requirements, compliance with these requirements could continue to be affected by an alteration of the restraint system and/or the seat.

Many vehicles will depend on side impact air bag technology to meet all of the injury criteria of the standard when tested with the 5th percentile female and 50th percentile male dummies. Since many modifiers make alterations that include removing the side air bags in vehicles designed to the new requirements, the agency believes that these modifications could take the vehicles out of compliance with the MDB test.

The agency also believes that the compliance with the injury criteria for the MDB test could be affected even if vehicle seats with seat-mounted air bags are not removed but are instead changed in a less significant way to accommodate a person with a disability (*e.g.,* an OEM seat is mounted on a 6-way power seat base). This is because countermeasures that were designed to protect the occupant at the OEM seating position that may no longer be as protective at the position at which the seat is placed after the modification. Thus, NHTSA believes that there is a continuing need to exempt modifiers from the MDB test requirements for the purpose of accommodating persons with disabilities.

Pole Test Requirements

This final rule also expands § 595.7(c)(15) to include S9 of FMVSS No. 214. This change exempts modifications that affect the vehicle's compliance with the pole test requirements of FMVSS No. 214 in any case in which the restraint system and/or seat position must be changed to accommodate a person with a disability.

Removing an OEM seat that has a side air bag and replacing it with an aftermarket seat that does not would likely make inoperative the system installed in compliance with FMVSS No. 214. Making some other substantive modification of the OEM seat or restraint system to accommodate a person with a disability could also affect the measurement of the injury criteria specified in the standard. We believe that an exemption from the make inoperative provision with regard to the pole test in FMVSS No. 214 is needed to permit modification of the vehicle's seating system to accommodate a person with a disability. This is comparable to the position taken by NHTSA with regard to the make inoperative exemption for frontal air bags required by FMVSS No. 208. See 595.7(c)(14). Thus, we conclude today that the inclusion of S9 of FMVSS No. 214 in § 595.7(c)(15) is needed.

Rulemaking Analyses and Notices

Executive Order 12866, Executive Order 13563, and DOT Regulatory Policies and Procedures

NHTSA has considered the impact of this rulemaking action under Executive

[1] The MDB test simulates an intersection collision with one vehicle being struck in the side by another vehicle.

[2] 72 FR 51908, September 11, 2007; response to petitions for reconsideration, 73 FR 32473, June 9, 2003; 75 FR 12123, March 15, 2010.

[3] NHTSA estimated in the FMVSS No. 214 rulemaking that side head and torso air bags result in a 24 percent reduction in fatality risk for nearside occupants and an estimated 14 percent reduction in fatality risk by torso bags alone. See Docket No. NHTSA–29134, NHTSA's Final Regulatory Impact Analysis.)

Order 12866, Executive Order 13563, and the Department of Transportation's regulatory policies and procedures. This rulemaking document was not reviewed by the Office of Management and Budget under E.O. 12866, ''Regulatory Planning and Review.'' It is not considered to be significant under E.O. 12866 or the Department's Regulatory Policies and Procedures (44 FR 11034; February 26, 1979). NHTSA has determined that the effects are minor and that a regulatory evaluation is not needed to support the subject rulemaking. Today's final rule imposes no costs on the vehicle modification industry. If there is any effect, it will be a cost savings due to the exemptions.

Regulatory Flexibility Act

Pursuant to the Regulatory Flexibility Act (5 U.S.C. 601 *et seq.,* as amended by the Small Business Regulatory Enforcement Fairness Act (SBREFA) of 1996), whenever an agency is required to publish a notice of proposed rulemaking or final rule, it must prepare and make available for public comment a regulatory flexibility analysis that describes the effect of the rule on small entities (*i.e.,* small businesses, small organizations, and small governmental jurisdictions). No regulatory flexibility analysis is required if the head of an agency certifies the rule will not have a significant economic impact on a substantial number of small entities. SBREFA amended the Regulatory Flexibility Act to require Federal agencies to provide a statement of the factual basis for certifying that a rule will not have a significant economic impact on a substantial number of small entities.

NHTSA has considered the effects of this final rule under the Regulatory Flexibility Act. Many dealerships and repair businesses would be considered small entities, and some of these businesses modify vehicles to accommodate individuals with disabilities. I certify that this final rule does not have a significant economic impact on a substantial number of small entities. While many dealers and repair businesses are considered small entities, this exemption does not impose any new requirements, but instead provides additional flexibility. Therefore, the impacts on any small businesses affected by this rulemaking would not be substantial.

Executive Order 13132 (Federalism)

NHTSA has examined today's final rule pursuant to Executive Order 13132 (64 FR 43255; Aug. 10, 1999) and concluded that no additional consultation with States, local governments, or their representatives is mandated beyond the rulemaking process. The agency has concluded that the final rule does not have sufficient federalism implications to warrant consultation with State and local officials or the preparation of a federalism summary impact statement. The final rule does not have ''substantial direct effects on the States, on the relationship between the national government and the States, or on the distribution of power and responsibilities among the various levels of government.'' Today's final rule does not impose any additional requirements. Instead, it lessens burdens on the exempted entities.

NHTSA rules can have preemptive effect in two ways. First, the National Traffic and Motor Vehicle Safety Act contains an express preemption provision:

> When a motor vehicle safety standard is in effect under this chapter, a State or a political subdivision of a State may prescribe or continue in effect a standard applicable to the same aspect of performance of a motor vehicle or motor vehicle equipment only if the standard is identical to the standard prescribed under this chapter.

49 U.S.C. 30103(b)(1). It is this statutory command by Congress that preempts any non-identical State legislative and administrative law address the same aspect of performance. However, this provision is not relevant to this final rule as this rule does not involve the establishing, amending or revoking or a Federal motor vehicle safety standard.

The express preemption provision described above is subject to a savings clause under which ''[c]ompliance with a motor vehicle safety standard prescribed under this chapter does not exempt a person from liability at common law.'' 49 U.S.C. 30103(e) Pursuant to this provision, State common law tort causes of action against motor vehicle manufacturers that might otherwise be preempted by the express preemption provision are generally preserved. However, the Supreme Court has recognized the possibility, in some instances, of implied preemption of State common law tort causes of action by virtue of NHTSA's rules—even if not expressly preempted.

This second way that NHTSA rules can preempt is dependent upon the existence of an actual conflict between an FMVSS and the higher standard that would effectively be imposed on motor vehicle manufacturers if someone obtained a State common law tort judgment against the manufacturer—notwithstanding the manufacturer's compliance with the NHTSA standard. Because most NHTSA standards established by an FMVSS are minimum standards, a State common law tort cause of action that seeks to impose a higher standard on motor vehicle manufacturers will generally not be preempted. However, if and when such a conflict does exist—for example, when the standard at issue is both a minimum and a maximum standard—the State common law tort cause of action is impliedly preempted. See *Geier* v. *American Honda Motor Co.,* 529 U.S. 861 (2000).

Pursuant to Executive Order 13132, NHTSA has considered whether this rule could or should preempt State common law causes of action. The agency's ability to announce its conclusion regarding the preemptive effect of one of its rules reduces the likelihood that preemption will be an issue in any subsequent tort litigation.

To this end, the agency has examined the nature (*e.g.,* the language and structure of the regulatory text) and objectives of today's rule and finds that this rule merely increases flexibility for certain exempted entities. As such, NHTSA does not intend that this rule preempt state tort law that would effectively impose a higher standard on motor vehicle manufacturers than that established by today's rule. Establishment of a higher standard by means of State tort law would not conflict with the exemption announced here. Without any conflict, there could not be any implied preemption of a State common law tort cause of action. Further, we are unaware of any State law or action that would prohibit the actions that this final rule would permit.

Civil Justice Reform

When promulgating a regulation, agencies are required under Executive Order 12988 to make every reasonable effort to ensure that the regulation, as appropriate: (1) Specifies in clear language the preemptive effect; (2) specifies in clear language the effect on existing Federal law or regulation, including all provisions repealed, circumscribed, displaced, impaired, or modified; (3) provides a clear legal standard for affected conduct rather than a general standard, while promoting simplification and burden reduction; (4) specifies in clear language the retroactive effect; (5) specifies whether administrative proceedings are to be required before parties may file suit in court; (6) explicitly or implicitly defines key terms; and (7) addresses other important issues affecting clarity and general draftsmanship of regulations.

Pursuant to this Order, NHTSA notes as follows. The preemptive effect of today's final rule is discussed above. NHTSA notes further that there is no requirement that individuals submit a petition for reconsideration or pursue other administrative proceeding before they may file suit in court.

National Technology Transfer and Advancement Act

Under the National Technology Transfer and Advancement Act of 1995 (NTTAA) (Pub. L. 104–113), ''all Federal agencies and departments shall use technical standards that are developed or adopted by voluntary consensus standards bodies, using such technical standards as a means to carry out policy objectives or activities determined by the agencies and departments.'' Voluntary consensus standards are technical standards (*e.g.,* materials specifications, test methods, sampling procedures, and business practices) that are developed or adopted by voluntary consensus standards bodies, such as the Society of Automotive Engineers (SAE). The NTTAA directs us to provide Congress, through OMB, explanations when we decide not to use available and applicable voluntary consensus standards. No voluntary standards exist regarding this exemption for modification of vehicles to accommodate persons with disabilities.

Unfunded Mandates Reform Act

The Unfunded Mandates Reform Act of 1995 requires agencies to prepare a written assessment of the costs, benefits and other effects of proposed or final rules that include a Federal mandate likely to result in the expenditure by State, local or tribal governments, in the aggregate, or by the private sector, of more than $100 million annually (adjusted for inflation with base year of 1995). This exemption will not result in expenditures by State, local or tribal governments, in the aggregate, or by the private sector in excess of $100 million annually.

National Environmental Policy Act

NHTSA has analyzed today's final rule for the purposes of the National Environmental Policy Act. The agency has determined that implementation of today's final rule will not have any significant impact on the quality of the human environment.

Paperwork Reduction Act

Under the Paperwork Reduction Act of 1995 (PRA), a person is not required to respond to a collection of information by a Federal agency unless the collection displays a valid OMB control number. Today's final rule does not contain new reporting requirements or requests for information beyond what is already required by 49 CFR part 595 subpart C.

Plain Language

Executive Order 12866 requires each agency to write all rules in plain language. Application of the principles of plain language includes consideration of the following questions:

- Have we organized the material to suit the public's needs?
- Are the requirements in the rule clearly stated?
- Does the rule contain technical language or jargon that isn't clear?
- Would a different format (grouping and order of sections, use of headings, paragraphing) make the rule easier to understand?
- Would more (but shorter) sections be better?
- Could we improve clarity by adding tables, lists, or diagrams?
- What else could we do to make the rule easier to understand?

If you have any responses to these questions, please notify the agency in writing.

Regulation Identifier Number (RIN)

The Department of Transportation assigns a regulation identifier number (RIN) to each regulatory action listed in the Unified Agenda of Federal Regulations. The Regulatory Information Service Center publishes the Unified Agenda in April and October of each year. You may use the RIN contained in the heading at the beginning of this document to find this action in the Unified Agenda.

List of Subjects in 49 CFR Part 595

Motor vehicle safety, Motor vehicles.

In consideration of the foregoing, we amend 49 CFR part 595 as follows:

PART 595—MAKE INOPERATIVE EXEMPTIONS

■ 1. The authority citation for part 595 continues to read as follows:

Authority: 49 U.S.C. 322, 30111, 30115, 30117, 30122 and 30166; delegation of authority at 49 CFR 1.50.

■ 2. Amend § 595.7 by revising paragraph (c)(15) to read as follows:

§ 595.7 Requirements for vehicle modifications to accommodate people with disabilities.

* * * * *

(c) * * *

(15) S7 and S9 of 49 CFR 571.214, for the designated seating position modified, in any cases in which the restraint system and/or seat at that position must be changed to accommodate a person with a disability.

* * * * *

Issued on: June 16, 2011.

David L. Strickland,

Administrator.

[FR Doc. 2011–15765 Filed 6–23–11; 8:45 am]

BILLING CODE 4910–59–P

Proposed Rules

Federal Register
Vol. 76, No. 122
Friday, June 24, 2011

This section of the FEDERAL REGISTER contains notices to the public of the proposed issuance of rules and regulations. The purpose of these notices is to give interested persons an opportunity to participate in the rule making prior to the adoption of the final rules.

DEPARTMENT OF THE TREASURY

Office of the Comptroller of the Currency

12 CFR Parts 4, 5, 7, 8, 28, and 34

[Docket ID OCC–2011–0006]

RIN 1557–AD41

Office of Thrift Supervision Integration; Dodd-Frank Act Implementation; Correction

Correction

In proposed rule document 2011–13887 appearing on page 32332 in the issue of Monday, June 6, 2011, make the following correction:

In the second column, in the **SUPPLEMENTARY INFORMATION** section, in the first paragraph, in the tenth line, ''*regs.comments@occ.treas.gov*'' should read ''*regs.comments@occ.gov*''.

[FR Doc. C1–2011–13887 Filed 6–23–11; 8:45 am]

BILLING CODE 4810–33–P

DEPARTMENT OF THE TREASURY

Office of the Comptroller of the Currency

12 CFR Part 45

[Docket No. OCC–2011–0008]

RIN 1557–AD43

BOARD OF GOVERNORS OF THE FEDERAL RESERVE SYSTEM

12 CFR Part 237

[Docket No. R–1415]

RIN 7100 AD74

FEDERAL DEPOSIT INSURANCE CORPORATION

12 CFR Part 324

RIN 3064–AD79

FARM CREDIT ADMINISTRATION

12 CFR Part 624

RIN 3052–AC69

FEDERAL HOUSING FINANCE AGENCY

12 CFR Part 1221

RIN 2590–AA45

Margin and Capital Requirements For Covered Swap Entities

AGENCY: Office of the Comptroller of the Currency, Treasury (OCC); Board of Governors of the Federal Reserve System (Board); Federal Deposit Insurance Corporation (FDIC); Farm Credit Administration (FCA); and the Federal Housing Finance Agency (FHFA).

ACTION: Proposed rule; extension of comment period.

SUMMARY: On May 11, 2011, the OCC, Board, FDIC, FCA, and FHFA (collectively, the Agencies) published in the **Federal Register** a joint notice of proposed rulemaking for public comment to establish minimum margin and capital requirements for registered swap dealers, major swap participants, security-based swap dealers, and major security-based swap participants for which one of the Agencies is the prudential regulator (the proposed rule).

Due to the complexity of the rulemaking, to allow parties more time to consider the impact of the proposed rule, and so that the comment period on the proposed rule will run concurrently with the comment period for similar margin and capital requirements proposed by the Commodity Futures Trading Commission, the Agencies have determined that an extension of the comment period until July 11, 2011 is appropriate. This action will allow interested persons additional time to analyze the proposed rules and prepare their comments.

DATES: Comments on the proposed rule must be received on or before July 11, 2011.

ADDRESSES: You may submit comments by any of the methods identified in the proposed rule. Please submit your comments using only one method.

FOR FURTHER INFORMATION CONTACT: *OCC:* Michael Sullivan, Director, Market RAD (202) 874–3978, Kurt Wilhelm, Director, Financial Markets Group (202) 874–4479, Jamey Basham, Assistant Director, Legislative and Regulatory Activities Division (202) 874–5090, or Ron Shimabukuro, Senior Counsel, Legislative and Regulatory Activities Division (202) 874–5090, Office of the Comptroller of the Currency, 250 E Street, SW., Washington, DC 20219.

Board: Sean D. Campbell, Deputy Associate Director, Division of Research and Statistics, (202) 452–3761, Michael Gibson, Senior Associate Director, Division of Research and Statistics, (202) 452–2495, or Jeremy R. Newell, Senior Attorney, Legal Division, (202) 452–3239, Board of Governors of the Federal Reserve System, 20th and C Streets, NW., Washington, DC 20551.

FDIC: Bobby R. Bean, Chief, Policy Section, (202) 898–6705, John Feid, Senior Capital Markets Specialist, (202) 898–8649, Division of Risk Management Supervision, Thomas F. Hearn, Counsel, (202) 898–6967, or Ryan K. Clougherty, Senior Attorney, (202) 898–3843, Legal Division, Federal Deposit Insurance Corporation, 550 17th Street, NW., Washington, DC 20429.

FHFA: Robert Collender, Principal Policy Analyst, Office of Policy Analysis and Research, 202–343–1510, *Robert.Collender@fhfa.gov,* Peggy Balsawer, Assistant General Counsel, Office of General Counsel, 202–343–1529, *Peggy.Balsawer@fhfa.gov,* or James Carley, Senior Associate Director, Division of FHLBank Regulation, 202–408–2507, *James.Carley@fhfa.gov,*

Federal Housing Finance Agency, Fourth Floor, 1700 G Street, NW., Washington, DC 20552. The telephone number for the Telecommunications Device for the Hearing Impaired is (800) 877–8339.

FCA: William G. Dunn, Acting Associate Director, Finance and Capital Markets Team, Office of Regulatory Policy, Farm Credit Administration, McLean, VA 22102–5090, (703) 883–4414, TTY (703) 883–4434, Joseph T. Connor, Associate Director for Policy and Analysis, Office of Secondary Market Oversight, Farm Credit Administration, McLean, VA 22102–5090, (703) 883–4280, TTY (703) 883–4434, or Rebecca S. Orlich, Senior Counsel, Office of General Counsel, Farm Credit Administration, McLean, VA 22102–5090, (703) 883–4020, TTY (703) 883–4020.

SUPPLEMENTARY INFORMATION: On May 11, 2011, the proposed rule was published in the **Federal Register**.[1] The proposed rule would establish minimum margin and capital requirements for registered swap dealers, major swap participants, security-based swap dealers, and major security-based swap participants for which one of the Agencies is the prudential regulator, as required under sections 731 and 764 of the Dodd-Frank Wall Street Reform and Consumer Protection Act (the Dodd-Frank Act).[2] Sections 731 and 764 of the Dodd-Frank Act add a new section 4s to the Commodity Exchange Act and a new section 15F to the Securities Exchange Act of 1934, respectively, which require the registration and regulation of swap dealers and major swap participants and security-based swap dealers and major security-based swap participants (collectively, swap entities). For certain types of swap entities that are prudentially regulated by one of the Agencies, sections 731 and 764 of the Dodd-Frank Act require the Agencies to adopt rules jointly for swap entities under their respective jurisdictions imposing (i) capital requirements and (ii) initial and variation margin requirements on all non-cleared swaps and non-cleared security-based swaps. In recognition of the complexities of the rulemaking and the variety of considerations involved in its impact and implementation, the Agencies requested that commenters respond to numerous questions. The proposed rule stated that the public comment period would close on June 24, 2011.[3]

The Agencies have received requests from the public for an extension of the comment period.[4] The Agencies believe that it is important to allow parties more time to consider the impact of the proposed rule, and to extend the comment period on the proposed rule so that it will run concurrently with the comment period for similar margin and capital requirements proposed by the Commodity Futures Trading Commission.[5] Therefore, the Agencies are extending the deadline for submitting comments on the proposed rule from June 24, 2011 to July 11, 2011.

Dated: June 21, 2011.

Julie L. Williams,

First Senior Deputy Comptroller and Chief Counsel.

By order of the Board of Governors of the Federal Reserve System, acting through the Secretary under delegated authority, June 22, 2011.

Jennifer J. Johnson,

Secretary of the Board.

Dated at Washington, DC, this 21 of June 2011.

Federal Deposit Insurance Corporation.

Robert E. Feldman,

Executive Secretary.

Dale L. Aultman

Secretary, Farm Credit Administration Board.

Dated: June 21, 2011.

Stephen M. Cross,

Deputy Director of the Division of Bank Regulation.

By delegation,

Federal Housing Finance Agency.

[FR Doc. 2011–16004 Filed 6–23–11; 8:45 am]

BILLING CODE 6714–01–8070–01–6705–01–6210–01–4810–33–P

[1] *See* 76 FR 27564.

[2] Dodd-Frank Wall Street Reform and Consumer Protection Act, Public Law 111–203, 124 Stat. 1376 (2010).

[3] *See id.*

[4] *See* comment letter to the OCC, Board, and FDIC from American Bankers Association *et al.* (June 17, 2011).

[5] *See* 76 FR 23732; 76 FR 27621.

NATIONAL CREDIT UNION ADMINISTRATION

12 CFR Part 703

Financial Derivatives Transactions To Offset Interest Rate Risk; Investment and Deposit Activities

AGENCY: National Credit Union Administration.

ACTION: Advance Notice of Proposed Rulemaking.

SUMMARY: Through this Advance Notice of Proposed Rulemaking (''ANPR''), the National Credit Union Administration (''NCUA'') requests public comments on whether and how to modify its rule on investment and deposit activities to permit a natural person credit union to engage in the purchase and sale of financial derivatives for the purpose of offsetting interest rate risk. Although permitted by law, NCUA currently allows only a limited number of credit unions, on a case-by-case basis, to engage in such transactions under an investment pilot program.

DATES: Comments must be received on or before August 23, 2011.

ADDRESSES: You may submit comments by any one of the following methods (Please send comments by one method only):

- *Federal eRulemaking Portal: http://www.regulations.gov.* Follow the instructions for submitting comments.
- *NCUA Web Site: thttp://www.ncua.gov/RegulationsOpinionsLaws/proposed_regs/proposed_regs.html.* Follow the instructions for submitting comments.
- *E-mail:* Address to *regcomments@ncua.gov.* Include ''[Your name] Comments on Part 703 ANPR, Financial Derivatives Transactions to Offset Interest Rate Risk'' in the e-mail subject line.
- *Fax:* (703) 518–6319. Use the subject line described above for e-mail.
- *Mail:* Address to Mary Rupp, Secretary of the Board, National Credit Union Administration, 1775 Duke Street, Alexandria, Virginia 22314–3428.
- *Hand Delivery/Courier:* Same as mail address.

FOR FURTHER INFORMATION CONTACT: Jeremy Taylor, Senior Capital Market Specialist, *telephone:* 703/518–6628.

SUPPLEMENTARY INFORMATION:

I. Background

A. *Financial Derivatives Transactions.* A financial ''derivative'' is a financial contract, the value of which is derived from the performance of an underlying asset or market index. An interest rate ''swap,'' for example, may be tied to short-term ''LIBOR rates'', which are variable, and long-term ''swap rates,'' which are fixed. The parties to an interest rate ''swap'' transaction can agree to exchange fixed cash flows for variable cash flows. The purpose may be either speculative or to reduce risk.

A credit union may enter into a derivatives transaction to protect itself against interest rate risk. For example, a credit union that has invested its deposits in a portfolio of mortgages that pays a fixed rate of interest is exposed to risk of an upward movement in interest rates. On members' variable rate

deposits, the credit union will be forced to increase the rates it pays in order to stay competitive, while the cash flows received from its portfolio of fixed-rate mortgages remains static. As interest rates rise, the credit union's net interest margin shrinks, and the value of the mortgages diminishes.

To offset the impact of rising interest rates, a credit union could enter into an interest rate ''swap'' in which it exchanges with a counterparty the fixed-rate cash flows it receives from its mortgages for variable-rate cash flows that fluctuate with the yield it must pay on members' deposits. As a result, the credit union's cost of funds remains the same regardless of interest rate movements.

Alternatively, a credit union could purchase an interest rate ''cap'' that would effectively fix the cost of funds at a pre-agreed ceiling. For a premium paid by the credit union, the counterparty agrees to make payments to the credit union when the referenced variable market rate exceeds the contractual ceiling rate. This payment would occur at the end of each period in which a referenced rate, like LIBOR, exceeds the agreed ceiling rate. The interest rate ''cap'' acts as insurance against rising interest rates since the credit union's cost of funds on the amount hedged will be offset by counterparty's payments in excess of the interest rate ceiling. The counterparty thus absorbs the risk of significant interest rate increases above the contractual ceiling rate.

B. *Authority To Invest in Financial Derivatives.* The purchase and sale of financial derivatives, provided it is for the purpose of offsetting interest rate risk (''IRR''), is recognized as an ''incidental power'' granted by the Federal Credit Union Act (''the Act'') to enable a federally-chartered credit union (''FCU'') to carry on the business for which it was incorporated. 12 U.S.C. 1757(17); NCUA General Counsel Opinion No. 99–0229 (Feb. 23, 1999).

To implement the investment authorities of FCUs, part 703 of NCUA's Rules and Regulations, 12 CFR 703, identifies the investments and investment activities authorized by the Act and imposes requirements and restrictions in order to preserve the safety and soundness of the credit unions that hold the investments and engage in the activities. *Id.* §§ 703.13, 703.14. Part 703 further identifies certain investments that it prohibits for safety and soundness reasons even though they are authorized by the Act. *Id.* §§ 703.15, 703.16. Among these prohibited transactions, with certain exceptions, are financial derivatives such as futures, options, interest rate swaps and forward rate agreements. *Id.* § 703.16(a). Hence, FCUs are generally prohibited from engaging in financial derivatives transactions that are utilized by many financial institutions for the purpose of offsetting their IRR.

Part 703 provides for an exemption from the prohibition against derivatives transactions in the form of an investment pilot program (''Pilot Program'') that ''permit[s] a limited number of [FCUs] to engage in investment activities prohibited by this part but permitted by the Act.'' *Id.* § 703.19(a). An FCU seeking to establish a Pilot Program of its own to engage in a prohibited activity must obtain NCUA approval. *Id.* § 703.19(b). To be eligible for approval, an FCU must have a minimum net worth classification of ''well capitalized'' and must document its Pilot Program's benefits, costs, internal controls, monitoring systems, and impact on the financial performance, risk profile and asset-liability management strategies of the FCU. *Id.* Presently, there is no limit to the duration of an approved Pilot Program.

A third party seeking to establish a Pilot Program to engage in a prohibited activity on behalf of client FCUs also must obtain NCUA approval. *Id.* § 703.19(c). To be eligible for approval, a third party must describe its Pilot Program's activities and document the benefits and risks to FCU clients with whom it has contracted. *Id.* If the third party's Pilot Program is approved, an FCU client generally does not need to obtain NCUA approval for itself to participate. *Id.* § 703.19(d).

C. *Pilot Programs To Engage in Derivatives Activities.* Pilot Programs allowing investment activities prohibited by part 703 that are otherwise lawful have been available on a case-by-case basis since 1998. 62 FR 32989, 32999 (June 18, 1997). The NCUA Board has since approved Pilot Programs authorizing two FCUs to each independently engage in derivatives activities for IRR management purposes on its own behalf. Under NCUA's *Standards for Participating Credit Unions and Third-Party Derivatives Pilot Program Applicants* (''3rd party approval standards''),[1] the NCUA Board approved Pilot Programs authorizing three third-party entities to engage in such activities to manage the IRR of their client FCUs—Western Corporate FCU (''WesCorp'') in 2000, ALM First Financial Advisors, Inc. (''ALM 1st'') in 2002, and Southwest Corporate Investment Services, a credit union service organization (''Southwest CUSO'') in 2005.[2] Operating standards governing an FCU's or a third party's approved Pilot Program to engage in derivatives activities to offset IRR are set forth in the approvals for each of these Pilot Programs.

Since the inception of Pilot Programs allowing investment activities prohibited by part 703, the NCUA Board has generally limited its approval of FCUs seeking to independently engage in derivatives to offset IRR, primarily for two reasons. First, such derivatives present risks that generally are not familiar to FCUs. Second, FCU demand for such instruments has been low. Also for these reasons, the NCUA Board thus far has not reconsidered whether to permit derivatives activities on an elective basis, as other federal financial institution regulators do, instead of only under an approved Pilot Program.

D. *Policy Alternatives to Existing Pilot Programs.* In 2010, Congress enacted the Dodd-Frank Wall Street Reform and Consumer Protection Act, Public Law 111–203, 124 Stat. 1376 (''Dodd-Frank''), to reduce risk, increase transparency and promote market integrity within the financial system. To that end, section 723(a)(3) of Dodd-Frank requires ''financial entities'' to clear their derivatives transactions through a ''derivatives clearing organization,'' *i.e.*, a clearinghouse, unless an exception to mandatory clearing applies. 7 U.S.C. 2(h)(1)(A), 2(h)(7)(A)(i). That section directs the Commodity Futures Trading Commission (''CFTC'') to consider whether to exempt certain financial institutions, including credit unions with total assets of less than $10 billion, from the clearing mandate's ''financial entity'' definition. *Id.* § 2(h)(7)(C)(ii)(III).

The CFTC recently issued for comment a proposed rule on ''End-User Exception to Mandatory Clearing of Swaps.'' 75 FR 80747 (December 23, 2010). The proposed rule introduces

[1] The third party approval standards are available on NCUA Web site: *http://www.ncua.gov/Resources/ALManagementInvest/Investment.aspx*. Although FCU participation in a third party Pilot Program generally does require NCUA approval, 12 CFR 703.19(d), FCUs participating in a third party's Pilot Program to engage in derivatives activities must obtain Regional Office permission to participate. There are no approval standards that apply to an FCU seeking approval of its own Pilot Program to independently engage in derivatives transactions for its own benefit.

[2] The approval of WesCorp's Pilot Program effectively terminated when WesCorp was liquidated in October 2010. ALM 1st presently has 9 FCU clients, 6 of whom migrated from WesCorp's Pilot Program. The approval of Southwest CUSO's Pilot Program survives despite the liquidation of Southwest Corporate FCU in October 2010. Upon information and belief, however, Southwest CUSO has never had any FCU clients.

new requirements governing the elective exception to mandatory clearing of swaps available to swap counterparties, for which credit unions may qualify. Excepted institutions would be required under the rule to report derivative positions to a registered swap data repository, and to provide certain items of information. This information would describe how the excepted entity meets its financial obligations associated with non-cleared swaps, including methods used to mitigate credit risk. The information would also indicate the status of the entity that qualifies it for an ''end-user exception'' to the clearing mandate, and how the reported derivative is being used to mitigate commercial risk.

In view of the Dodd-Frank clearing mandate, and with the benefit of 12 years' experience with Pilot Programs allowing derivatives activities, it is timely for the NCUA Board to reconsider, and resolve issues related to, whether and under what conditions it should permit natural person FCUs to engage in derivatives transactions for the purpose of offsetting IRR, *i.e.,* whether through approved third parties or independently.

NCUA is disinclined to allow FCUs to engage in derivatives activities unconditionally for several reasons. First, NCUA must ensure that FCUs do not use derivatives for the unauthorized purpose of speculation. Second, the value of the cash flow streams from derivative transactions can be unusually volatile because the value is driven by the movement of interest rates and level of volatility in financial markets and this value can therefore itself be volatile. Finally, it is reasonable to condition participation in derivatives activities on the FCU's development of sufficient expertise and infrastructure to manage IRR and credit risks associated with derivatives in financial markets. For these reasons, NCUA is reconsidering permitting FCUs to engage in derivative activity only on the basis of a waiver of the existing regulatory prohibition, subject to compliance with appropriate conditions.

In reconsidering derivatives activity by FCUs for the purpose of offsetting IRR, the NCUA Board seeks public comment—in the form of answers to the specific questions set forth under ''Issues for Comment'' below—on five different policy alternatives: (A) Whether to discontinue allowing Pilot Programs for FCUs and third parties to engage in derivatives activity to offset IRR and, if so, whether to terminate such existing Pilot Programs; (B) Whether to allow FCUs to engage in such derivatives activities through a third party on a case-by-case basis (*i.e.,* by waiver) provided the FCUs meet prudential standards applicable to the third party and the FCU; (C) Whether to allow FCUs to independently engage in such derivatives activities by waiver provided they meet prudential standards; and (D) What approval standards should be established to govern the evaluation of an FCU's request for approval to engage in derivatives through a third party; (E) What approval standards should be established to govern the evaluation of an FCU's request to engage in derivatives independently?

II. Issues for Comment

To facilitate consideration of the public's views, please address your comments to the questions set forth below on each issue, and organize and identify them by corresponding question number so that each question is addressed separately. To maximize the value of public input on each issue, it is also important that commenters provide and explain the reasons that support each of their conclusions. There will be a further opportunity to comment on these issues should the NCUA Board issue a proposed rule modifying its present policies on financial derivatives activities to offset IRR.

A. Existing Pilot Programs

NCUA believes it is timely to determine whether existing Pilot Programs are either to be terminated or incorporated as a permissible activity.

Question No.

1. Should existing Pilot Programs for FCUs to engage in derivatives for IRR management be permitted to continue? Explain why or why not.

2. Should such Pilot Programs for FCUs be permitted to continue by ''grandfathering'' the previous approvals into Part 703? Explain why or why not.

3. If FCUs seek an end-user exception from mandatory clearing as contemplated by the CFTC's proposed rule, they would need to provide items of information to a registered swap data repository. In view of this requirement, should NCUA permit FCUs to seek an end-user exception? Explain why or why not.

B. Third Party Derivative Authorization

In approving third party Pilot Programs, the NCUA Board sought to ensure that FCUs would engage in derivative activities in a safe and sound manner while allowing FCUs that lacked experience in derivatives to gain this experience. 62 FR at 32999. To achieve that goal, NCUA created standards for third party Pilot Programs (*see* note 2 *supra*) and expected an FCU to perform initial and ongoing due diligence of any third party provider that it uses. The standards cover requirements for the FCU and for the third-party providers. The requirements for an FCU applicant address its financial condition, required actions of the board of directors, accounting standards, counterparty credit quality, hedge transactions, modeling, internal controls, legal issues, transaction termination, and NCUA approval. The requirements for third-party applicant address contractual agreements, ongoing risk assessment, review of credit union internal controls, reporting to NCUA, credit union education, and the maximum number of participants with each third party.

The Pilot Program standards for an FCU engaging in third party derivatives activity are as follows:

Financial Condition. The FCU must have:

- Minimum net worth ratio of 7 percent or more; and
- Positive, stable earnings for preceding 12 months.

Board of Directors. The FCU's board of directors must:

- Approve the counterparty or counterparties.
- Update, at least quarterly, the credit rating and analysis of approved counterparties.
- Approve the proposed types of derivative transactions, the maximum limits for aggregate notional principal amounts permitted for each type of transaction deemed appropriate by the FCU's board of directors. The maximum limit on derivative exposure in notional terms should be stated as a percentage of net worth. The maximum notional limit for swaps plus the value of the underlying securities in option transactions must not exceed 250 percent of net worth.
- Determine hedge objectives and parameters and designate what correlation measures will be utilized. Approve correlation targets and tolerance limits prior to execution of each individual transaction.
- Understand, review and approve each transaction prior to execution and affirm that transactions will be used solely to reduce interest rate risk.
- Ensure management monitors the effectiveness of the hedge on at least a quarterly basis (preferably monthly) and reports this information to the board.
- Require management demonstrate it has adequate knowledge to understand and monitor hedge positions using derivative instruments.

a. *Accounting Standards.* The FCU will:

• Commit to an annual independent audit of financial statements. The statements will be prepared in accordance with generally accepted accounting principles, including FASB ASC 815 Derivatives and Hedging. The audits will be performed in accordance with generally accepted auditing standards by a certified public accountant or public accountant licensed by the appropriate state or jurisdiction to perform those services.

• Have external auditors review its accounting policies and procedures prior to the first transaction. The external auditors will opine that the policies are suitable for these transactions.

b. *Counter-party Credit Quality.* All counter-parties must be rated ''AA-'' (or equivalent) or better at the time of any transaction. Termination of the transaction is required once a counterparty is downgraded to ''BBB'' (or equivalent). When there is a split rating, the lower rating will prevail.

c. *Hedge Transactions.* The credit union will:

• Identify the circumstances leading to the decision to hedge; and

• Specify derivative transactions to be employed and definition of:

○ Hedge type (fair value, cash flow, etc); and

○ Analysis to demonstrate effectiveness of hedge.

Shock analysis will not demonstrate correlation. Hedge effectiveness requires correlation through time, must be set prospectively, and effectiveness must be assessed retrospectively. Hedge effectiveness reporting will be required of the participating credit union and validated by the applicant. Accounting rules require that hedges be linked to specific assets or liabilities and cannot be related to overall balance sheet risk. Reports of the macro effects of the hedge should be limited to the impact of this on the interest rate risk of the balance sheet.

d. *Modeling.* Any model used to evaluate any hedge transaction using derivatives must include the ability to capture all options embedded in the transaction. For example, option pricing or option adjusted spread modeling using simulation methods may be needed. It must be clear that the model functionalities capture the specific behavior of the instrument to be hedged and the hedge itself.

e. *Internal Controls.* The FCU must have the following procedures and controls in place prior to execution of the first transaction.

• Designation of the individual(s) with responsibility for purchasing derivative instruments.

• Designation of the individual(s) or departments that have accounting and risk reporting responsibilities for the derivative instruments and hedge transactions.

• Segregation of duties for the individual(s) obtaining the prices of the derivative instruments, hedged items, and other instruments associated with reporting the hedge transaction and of those that execute the transaction.

• Segregation of duties for the individual(s) with derivative instrument reporting and risk assessment responsibility and of those involved in the hedge execution.

• Requirement for monitoring hedge performance by the asset/liability committee and the board.

• Requirement that the derivative and the hedged item be priced by an independent third party.

f. *Legal issues*

• The FCU's legal counsel must opine that the proposed transactions are legal.

• There must be an International Swap and Derivatives Association (ISDA) agreement between the counter-party and the FCU.

• The ISDA agreement must be supplemented by a bilateral collateral agreement between counter-party and the FCU. The bilateral collateral agreements must require the posting of collateral by either party that is in a net deficit position on any derivative that has been transacted. The agreement should further specify that the collateral must be permissible for FCUs to hold and will be held by an independent third party.

g. *Transaction Termination.* Any cases where designated hedges fail the limits of hedge effectiveness must be reported to the board of directors and the transaction terminated as soon as practicable. Also, termination of the transaction is required as soon as practicable once a counterparty is downgraded to ''BBB'' (or equivalent) as noted above.

Question No.

1. These third party standards would require replacement of credit quality references by functional equivalents. With this change, are the third party operating standards required in NCUA's Pilot Program generally appropriate to govern the use of derivatives by an FCU approved to engage in these activities through a third party? Explain why or why not.

2. If FCUs lacking prior experience with derivatives were required to spend a period of time within a third party Pilot Program, what period of time and/or number of transactions is reasonable to a safe and sound understanding of derivatives? In your answer explain why this is sufficient minimum time or number of transactions.

C. Independent Derivatives Authorization

Even if the NCUA Board allows FCUs having little or no derivatives exposure to participate in derivatives activities only through a third-party provider, it is anticipated that such FCUs may, after a time, seek to engage in derivative activities independently of a third party. In that event, however, further assessment of the FCU's knowledge, expertise, experience and infrastructure would be necessary, prior to granting such permission, to determine if the FCU is able to perform all aspects of derivatives activity for which the FCU may have previously relied on the third-party provider. The NCUA Board expects that, during any period of time when the FCU was acting with a third-party provider, the FCU would enhance its abilities to address asset liability analysis and modeling, dynamic hedging functionality, the pricing of any derivatives purchased, and the impact of marking-to-market on the value of derivatives and any hedged items. This enhanced expertise would serve as the basis for an application to engage in derivatives activity independently for the purpose of offsetting IRR.

Question No.

1. Should the NCUA Board consider allowing credit unions to engage in derivatives activity independently? Explain why or why not.

2. What are the attendant criteria, such as, asset size, capital adequacy, the balance sheet composition of a credit union, or risk exposure with and without derivatives, that NCUA should take into consideration in evaluating an FCU's request for approval to engage in derivatives independently? Specify and explain any criteria that are essential.

3. Are there specific actions an FCU should expect to take in preparation for applying to engage in derivatives activities independently? Specify and explain any actions which are needed.

D. Approval Standards for Derivatives Activities Through an Approved Third Party

An FCU that seeks to engage in derivatives activity through a third party Pilot Program must request permission from its Regional Office to participate (*see* note 2 *supra*), must demonstrate adequate expertise and infrastructure to engage in these transactions prior to doing so, and must provide documentation to the Pilot Program

provider. An FCU must operate according to the third party pilot program standards when it is approved to engage in derivatives activities through an approved third party. NCUA therefore seeks comment on the approval standards for an FCU seeking to engage in derivatives activity through a third party.

Question No.

1. Should NCUA require an FCU to state a balance sheet management plan to hedge IRR based on risk management objectives as a condition for approval? Explain why or why not.

2. Is it useful for an FCU to rely on the expertise of a third party to assess the effectiveness of derivatives to hedge IRR on an ongoing and dynamic basis or should the FCU be required to demonstrate it has this expertise internally as a condition for approval? In either case explain why or why not.

3. Is it useful for an FCU to rely on the expertise of a third party to assess the credit quality of derivative counterparties? Explain why or why not.

E. Approval To Engage Independently

NCUA expects that approving an FCU to independently engage in derivatives activity would require extensive examination of the applicant FCU and also would require enhanced supervision. This approval would be similar to the granting of expanded authority for a corporate credit union under recently revised Part 704, 75 FR 64786 (Oct. 20, 2010) and would require a self-assessment by the FCU to support its request. The NCUA Board would expect an FCU to address the following items prior to granting approval for that FCU to engage in derivatives activities independently:

i. Board of directors' policy identifying the specific purposes of specified derivatives activities and stating limits on maximum exposure in terms of notional principal amounts and mark-to-market values of individual and aggregate swaps;

ii. Ongoing assessment and reporting to the FCU's board of directors of derivative performance in achieving explicit interest rate risk management objectives;

iii. Selection criteria for eligible counterparties that address the process of identification and credit monitoring; posting of bilateral collateral and process for maintenance of available collateral;

iv. Disclosure of derivative price at time of purchase expressed as dollar values of a basis point on each derivative instrument;

v. Disclosure of costs of terminating any derivatives in the course of pursuing any exit strategy.

NCUA would expect the FCU's board of directors to review policy periodically, to review the FCU's derivatives positions on an ongoing basis, and to actively enforce compliance with the stated IRR management purpose of derivative activities.

Question No.

1. Should approval of an FCU to engage in derivatives activities be in the form of additional authorization similar to the expanded authority available under Appendix B to Part 704—Expanded Authorities and Requirements? Explain why or why not.

2. Should an FCU demonstrate enhanced credit functionality in terms of the experience of the FCU's personnel, credit analysis and reporting infrastructure in order to evaluate the creditworthiness of derivative counterparties? Explain why or why not and describe any minimum expectation.

3. Should an FCU demonstrate enhanced hedging expertise based on the experience of FCU's personnel or on additional derivatives management infrastructure? Explain why or why not, and describe any minimum expectation.

4. Is one year a sufficient amount of time for an FCU to fully prepare a self-assessment and application for approval to independently engage in derivatives to offset IRR? Explain why it is sufficient or why more time may be required.

5. Are there any additional aspects of the FCU besides items (i)–(v) above which NCUA should consider in its approval for the FCU to engage in derivatives activity independently? If so, explain why the item should be considered.

By the National Credit Union Administration Board on June 17, 2011.

Mary F. Rupp,

Secretary of the Board.

[FR Doc. 2011–15738 Filed 6–23–11; 8:45 am]

BILLING CODE P

DEPARTMENT OF TRANSPORTATION

Federal Aviation Administration

14 CFR Part 71

Proposed Modification of the Las Vegas, NV, Class B Airspace Area; Public Meetings; Correction

AGENCY: Federal Aviation Administration (FAA), DOT.

ACTION: Notice of meetings; correction.

SUMMARY: The FAA published a Notice of Meetings in the **Federal Register** of June 17, 2011, concerning a proposal to modify Class B airspace at Las Vegas, NV. The document contained an incorrect address for the informal airspace meeting scheduled Tuesday, August 23, 2011, in Henderson, NV. Also, the document contained the wrong phone number for the contact person. The information for the other two meetings is correct as originally published.

FOR FURTHER INFORMATION CONTACT: John Gough, Manager, Airspace and Procedures, and Bill Ruggiero, Support Manager Las Vegas, TRACON, 699 Wright Brothers Lane, Las Vegas, NV 89119; *telephone:* (702)–262–5910.

Correction

In the **Federal Register** of June 17, 2011, in FR Doc. 2011–15107, on page 35371, column 3, correct meeting number (2) in the **ADDRESSES** caption to read:

ADDRESSES: (2) The meeting on Tuesday, August 23, 2011, will be held at Coronado High School, 1001 Coronado Center Drive, Henderson, NV, 89052.

On page 35371, column 3, correct **FOR FURTHER INFORMATION CONTACT** caption to read:

FOR FURTHER INFORMATION CONTACT: John Gough, Manager, Airspace and Procedures, and Bill Ruggiero, Support Manager Las Vegas, TRACON, 699 Wright Brothers Lane, Las Vegas, NV 89119; *telephone:* (702) 262–5910.

Issued in Washington, DC, on June 20, 2011.

Gary A. Norek,

Acting Manager, Airspace, Regulations and ATC Procedures Group.

[FR Doc. 2011–15884 Filed 6–23–11; 8:45 am]

BILLING CODE 4910–13–P

DEPARTMENT OF THE TREASURY

Internal Revenue Service

26 CFR Part 1

[REG–137125–08]

RIN 1545–BI65

Certain Employee Remuneration in Excess of $1,000,000 Under Internal Revenue Code Section 162(m)

AGENCY: Internal Revenue Service (IRS), Treasury.

ACTION: Notice of proposed rulemaking.

SUMMARY: This document contains proposed regulations relating to the

deduction limitation for certain employee remuneration in excess of $1,000,000 under the Internal Revenue Code (Code). The proposed regulations clarify that qualified performance-based compensation attributable to stock options and stock appreciation rights must specify the maximum number of shares with respect to which options or rights may be granted to each individual employee. The proposed regulations also clarify the application of the transition rule for taxpayers that are not publicly held corporations and then become publicly held corporations.

DATES: Written or electronic comments must be received by September 22, 2011.

ADDRESSES: Send submissions to: CC:PA:LPD:PR (REG–137125–08), Room 5203, Internal Revenue Service, P.O. Box 7604, Ben Franklin Station, Washington, DC 20044. Submissions may be hand delivered Monday through Friday between the hours of 8 a.m. and 4 p.m. to CC:PA:LPD:PR (REG–137125–08), Courier's Desk, Internal Revenue Service, 1111 Constitution Avenue, NW., Washington, DC, or sent electronically via the Federal eRulemaking Portal at *http://www.regulations.gov/* (IRS REG–137125–08).

FOR FURTHER INFORMATION CONTACT: Concerning these proposed regulations, Ilya Enkishev at (202) 622–6030; concerning submissions of comments, and/or to request a public hearing, Richard Hurst at *Richard.A.Hurst@irscounsel.treas.gov* or (202) 622–7180 (not toll-free numbers).

SUPPLEMENTARY INFORMATION:

Background

This document contains a proposed amendment to 26 CFR part 1 under section 162(m) of the Code.

Section 162(m) was added to the Code by section 3211(a) of the Omnibus Budget Reconciliation Act of 1993, Public Law 103–66. Proposed regulations under section 162(m) were published in the **Federal Register** on December 20, 1993 (58 FR 66310). Final regulations under section 162(m) were published in the **Federal Register** on December 20, 1995 (TD 8650) (60 FR 65534).

The IRS and the Treasury Department have received questions regarding the requirement that a stock-based compensation plan must state the maximum number of shares with respect to which stock options or stock appreciation rights may be granted under the plan to any employee to qualify as performance-based compensation under section 162(m). The IRS and the Treasury Department have also received questions regarding the application of the transition rule for taxpayers that are not publicly held corporations and then become publicly held corporations. These proposed amendments to §§ 1.162–27(e)(2), 1.162–27(e)(4), and 1.162–27(f)(1) are not intended to reflect substantive changes to the requirements in the current regulations, but rather to clarify the current language.

Explanation of Provisions

1. *Maximum number of shares with respect to which options or rights may be granted to each individual employee.*

Section 1.162–27(b) provides that section 162(m) precludes a deduction under chapter 1 of the Code by any publicly held corporation for compensation paid to any covered employee to the extent that the compensation for the taxable year exceeds $1,000,000. Section 1.162–27(e)(1) provides that the deduction limit in § 1.162–27(b) does not apply to qualified performance-based compensation. Section 1.162–27(e)(1) further provides that qualified performance-based compensation is compensation that meets all of the requirements of § 1.162–27(e)(2) through (e)(5).

Section 1.162–27(e)(2)(vi) sets forth special rules for performance-based compensation attributable to stock options and stock appreciation rights. This section provides that stock options and stock appreciation rights are deemed to satisfy the performance goal requirement in § 1.162–27(e)(2) if: (1) The grant or award is made by the compensation committee; (2) the plan under which the option or right is granted states the maximum number of shares with respect to which options or rights may be granted during a specified period to any employee; and, (3) under the terms of the option or right, the amount of compensation the employee can receive is based solely on an increase in the value of the stock after the date of the grant or award.

The legislative history for section 162(m) provides that ''[i]n the case of stock options, it is intended that the directors may retain discretion as to the exact number of options that are granted to an executive, provided that the maximum number of options that the individual executive may receive during a specified period is predetermined.'' H.R. Conf. Rep. No. 213, 103rd Cong., 1st Sess. 586–87 (1993), reprinted in 1993 U.S.C.C.A.N. 1088, 1275–6.

The preamble to the proposed 1993 Treasury Regulations (58 FR 66310) under section 162(m) explains the reason for requiring an individual limit on the maximum number of shares for which options may be granted:

> Some have questioned why it would be necessary for the regulations to require an individual employee limit on the number of the shares for which options or stock appreciation rights may be granted, where shareholder approval of an aggregate limit is obtained for securities law purposes. The regulations follow the legislative history, which suggests that a per-employee limit be required under the terms of the plan. The IRS and the Treasury believe that a limit on the maximum number of shares for which individual employees may receive options or other rights is appropriate because it is consistent with the broader requirement that a performance goal include an objective formula for determining the maximum amount of compensation that an individual employee could receive if the performance goal were satisfied. A third party attempting to make this determination with respect to a stock option plan would need to know both the exercise price and the number of options that could be granted.

Section 1.162–27(h)(3)(i) of the final regulations provides that, under a transition rule that applies to plans or agreements approved by shareholders before December 20, 1993, a stock option plan was treated as satisfying the requirement to state a maximum number of shares for which an option could be granted to any employee over a specified period if the plan that was approved by the shareholders provided for an aggregate limit (consistent with SEC Rule 16b–3(b)) on the shares of employer stock for which awards could be made under the plan. This rule was available only during a limited reliance period specified in § 1.162–27(h)(3)(i).

These proposed regulations clarify § 1.162–27(e)(2)(vi) by providing that the plan under which the option or right is granted must specify the maximum number of shares with respect to which options or rights may be granted to any individual employee during a specified period. Accordingly, if a plan states an aggregate maximum number of shares that may be granted but does not contain a specific per-employee limitation on the number of options that may be granted, then any compensation attributable to the stock options or rights granted under the plan is not qualified performance-based compensation under § 1.162–27(e)(2)(vi). A plan satisfies § 1.162–27(e)(2)(vi) where the terms of the plan specify that an individual employee may be granted options or rights to receive the maximum number of shares authorized under the plan during a specified period. *Example 9* of § 1.162–27(e)(2)(vii) of the regulations has been modified to illustrate these principles.

These proposed regulations also provide a related clarification of the shareholder approval requirement under § 1.162–27(e)(4). Specifically, § 1.162–27(e)(4)(iv) is clarified to provide that the requirement for description of the compensation in this section is satisfied where the maximum number of shares for which grants may be made to each individual employee during a specified period and the exercise price of those options is disclosed to the shareholders of the corporation.

2. Compensation payable under restricted stock units paid by companies that become publicly held.

Section 1.162–27(f)(1) of the current regulations provides that in the case of a corporation that was not a publicly held corporation and then becomes a publicly held corporation, the $1,000,000 deduction limit ''does not apply to any remuneration paid pursuant to a compensation plan or agreement that existed during the period in which the corporation was not publicly held.'' If a corporation becomes publicly held in connection with an initial public offering (IPO), then the relief provided in § 1.162–27(f)(1) applies only to the extent that the prospectus accompanying the IPO disclosed information concerning the existing compensation plans or agreements and satisfied all applicable securities laws.

Pursuant to § 1.162–27(f)(2), a corporation may rely on § 1.162–27(f)(1) until the earliest of: (i) The expiration of the plan or agreement; (ii) the material modification of the plan or agreement; (iii) the issuance of all employer stock and other compensation that has been allocated under the plan; or (iv) the first meeting of shareholders at which directors are to be elected that occurs after the close of the third calendar year following the calendar year in which the IPO occurs or, in the case of a privately held corporation that becomes publicly held without an IPO, the first calendar year following the calendar year in which the corporation becomes publicly held. Section 1.162–27(f)(3) provides that the relief provided under § 1.162–27(f)(1) applies to any compensation received pursuant the exercise of a stock option or stock appreciation right, or the substantial vesting of restricted property, granted under a plan or agreement described in § 1.162–27(f)(1) if the grant occurs on or before the earliest of the events specified in § 1.162–27(f)(2).

Practitioners have asked whether compensation payable under a restricted stock unit arrangement or a phantom stock arrangement is eligible for the relief provided in § 1.162–27(f)(3). A restricted stock unit is a right to an amount based on the value of the employer's stock, and which is payable in cash, shares of the stock, or other property (as defined in § 1.83–3(e)), following the satisfaction of a specified vesting condition. Compensation payable under a phantom stock arrangement is compensation that is paid at a future date in cash or in property based on the value of the employer's stock.

The preamble to the final 1994 Treasury Regulations (60 FR 65534) under section 162(m) specifically addressed the types of compensation covered under § 1.162–27(f)(3):

> Commentators have asked that the relief provided in the 1994 amendments for stock options, stock appreciation rights, and restricted property be extended even further to cover other stock-based compensation and deferred compensation in general. After careful consideration of the comments received, the IRS and Treasury have concluded that there is not adequate justification for a further expansion of the 1994 expansion of the prior regulatory transition relief for previously approved plans and agreements, or the other similar relief provisions added in 1994.

Accordingly, only compensation attributable to stock options, stock appreciation rights, and restricted property is covered under § 1.162–27(f)(3). The proposed regulations clarify that the general rule of § 1.162–27(f)(1) applies to all compensation other than compensation specifically identified in § 1.162–27(f)(3).

Proposed Effective/Applicability Date

These regulations under section 162(m) are proposed to apply to taxable years ending on or after the date of publication of the Treasury decision adopting these rules as final regulation in the **Federal Register**.

Special Analyses

It has been determined that this notice of proposed rulemaking is not a significant regulatory action as defined in Executive Order 12866. Therefore, a regulatory assessment is not required. It also has been determined that section 553(b) of the Administrative Procedure Act (5 U.S.C. chapter 5) does not apply to these regulations, and because the regulations do not impose a collection of information on small entities, the Regulatory Flexibility Act (5 U.S.C. chapter 6) does not apply. Pursuant to section 7805(f) of the Code, this regulation has been submitted to the Chief Counsel for Advocacy of the Small Business Administration for comment on its impact on small business.

Comments and Requests for Public Hearing

Before these proposed regulations are adopted as final regulations, consideration will be given to any written (a signed original and eight (8) copies) or electronic comments that are timely submitted to the IRS. The IRS and the Treasury Department specifically request comments on the clarity of the proposed rules and how they can be made easier to understand. All comments will be available for public inspection and copying. A public hearing will be scheduled if requested in writing by any person that timely submits written comments. If a public hearing is scheduled, notice of the date, time, and place for the public hearing will be published in the **Federal Register**.

Drafting Information

The principal author of these proposed regulations is Ilya Enkishev, Office of the Division Counsel/Associate Chief Counsel (Tax Exempt and Government Entities). However, other personnel from the IRS and the Treasury Department participated in their development.

List of Subjects in 26 CFR Part 1

Income taxes, Reporting and recordkeeping requirements.

Proposed Amendments to the Regulations

Accordingly, 26 CFR part 1 is proposed to be amended as follows:

PART 1—INCOME TAXES

Paragraph 1. The authority citation for part 1 continues to read in part as follows:

Authority: 26 U.S.C. 7805 * * *.

Par. 2. Section 1.162–27 paragraphs (e)(2)(vi)(A), (e)(2)(vii) *Example 9,* (e)(4)(iv) and (f)(3) are revised and paragraph (j)(2)(vi) is added to read as follows:

§ 1.162–27 Certain employee remuneration in excess of $1,000,000.

* * * * *

(e) * * *

(2) * * *

(vi) * * *

(A) *In general.* Compensation attributable to a stock option or a stock appreciation right is deemed to satisfy the requirements of this paragraph (e)(2) if the grant or award is made by the compensation committee; the plan under which the option or right is granted states the maximum number of shares with respect to which options or rights may be granted during a specified

period to any individual employee; and, under the terms of the option or right, the amount of compensation the employee could receive is based solely on an increase in the value of the stock after the date of the grant or award. Conversely, if the amount of compensation the employee will receive under the grant or award is not based solely on an increase in the value of the stock after the date of grant or award (for example, in the case of restricted stock, or an option that is granted with an exercise price that is less than the fair market value of the stock as of the date of grant), none of the compensation attributable to the grant or award is qualified performance-based compensation because it does not satisfy the requirement of this paragraph (e)(2)(vi)(A). Whether a stock option grant is based solely on an increase in the value of the stock after the date of grant is determined without regard to any dividend equivalent that may be payable, provided that payment of the dividend equivalent is not made contingent on the exercise of the option. The rule that the compensation attributable to a stock option or stock appreciation right must be based solely on an increase in the value of the stock after the date of grant or award does not apply if the grant or award is made on account of, or if the vesting or exercisability of the grant or award is contingent on, the attainment of a performance goal that satisfies the requirements of this paragraph (e)(2).

* * * * *

(vii) * * *

Example 9. Corporation V establishes a stock option plan for salaried employees. The terms of the stock option plan specify that no individual salaried employee shall receive options for more than 100,000 shares over any 3-year period. The compensation committee grants options for 50,000 shares to each of several salaried employees. The exercise price of each option is equal to or greater than the fair market value at the time of each grant. Compensation attributable to the exercise of the options satisfies the requirements of this paragraph (e)(2). If, however, the terms of the options provide that the exercise price is less than fair market value at the date of grant, no compensation attributable to the exercise of those options satisfies the requirements of this paragraph (e)(2) unless issuance or exercise of the options was contingent upon the attainment of a preestablished performance goal that satisfies this paragraph (e)(2). If, however, the terms of the plan also provide that Corporation V could grant options to purchase no more than 900,000 shares over any 3-year period, but did not provide a limitation on the number of shares that any individual employee could purchase, then no compensation attributable to the exercise of those options satisfies the requirements of paragraph (e)(2)(vi) of this section.

* * * * *

(4) * * *

(iv) *Description of compensation.* Disclosure as to the compensation payable under a performance goal must be specific enough so that shareholders can determine the maximum amount of compensation that could be paid to any individual employee during a specified period. If the terms of the performance goal do not provide for a maximum dollar amount, the disclosure must include the formula under which the compensation would be calculated. Thus, if compensation attributable to the exercise of stock options is equal to the difference in the exercise price and the current value of the stock, then disclosure of the maximum number of shares for which grants may be made to any individual employee during a specified period and the exercise price of those options (for example, fair market value on date of grant) would satisfy the requirements of this paragraph (e)(4)(iv). In that case, shareholders could calculate the maximum amount of compensation that would be attributable to the exercise of options on the basis of their assumptions as to the future stock price.

* * * * *

(f) * * *

(3) *Stock-based compensation.* Paragraph (f)(1) of this section will apply to any compensation received pursuant to the exercise of a stock option or stock appreciation right, or the substantial vesting of restricted property, granted under a plan or agreement described in paragraph (f)(2) of this section if the grant occurs on or before the earliest of the event specified in paragraph (f)(2) of this section. This paragraph does not apply to any form of stock-based compensation other than the forms listed in the immediately preceding sentence. Thus, for example, compensation payable under a restricted stock unit arrangement or a phantom stock arrangement must be paid, rather than merely granted, on or before the occurrence of the earliest of the events specified in paragraph (f)(2) of this section in order for paragraph (f)(1) to apply.

* * * * *

(j) * * *

(2) * * *

(vi) The clarifications to paragraphs (e)(2)(vi)(A), (e)(2)(vii) *Example 9,* and (e)(4)(iv) of this section apply on or after June 24, 2011. The modification to paragraph (f)(3) of this section applies on or after the date of publication of the Treasury decision adopting these rules as final regulations in the **Federal Register**.

Steven T. Miller,

Deputy Commissioner for Services and Enforcement.

[FR Doc. 2011–15653 Filed 6–23–11; 8:45 am]

BILLING CODE 4830–01–P

DEPARTMENT OF THE TREASURY

Internal Revenue Service

26 CFR Part 54

[REG–125592–10]

RIN 1545–BJ62

Requirements for Group Health Plans and Health Insurance Issuers Relating to Internal Claims and Appeals and External Review Processes Under the Patient Protection and Affordable Care Act

AGENCY: Internal Revenue Service (IRS), Treasury.

ACTION: Notice of proposed rulemaking by cross-reference to temporary regulations.

SUMMARY: Elsewhere in this issue of the **Federal Register**, the IRS is issuing an amendment to temporary regulations published July 23, 2010 under the provisions of the Patient Protection and Affordable Care Act (the Affordable Care Act) regarding internal claims and appeals and external review processes. The IRS is issuing the temporary regulations at the same time that the Employee Benefits Security Administration of the U.S. Department of Labor and the Center for Consumer Information & Insurance Oversight of the U.S. Department of Health and Human Services are issuing a substantially similar amendment to interim final regulations published July 23, 2010 with respect to group health plans and health insurance coverage offered in connection with a group health plan under the Employee Retirement Income Security Act of 1974 and the Public Health Service Act. The temporary regulations provide guidance to employers, group health plans, and health insurance issuers providing group health insurance coverage. The text of those temporary regulations also serves as the text of these proposed regulations.

DATES: Written or electronic comments and requests for a public hearing must be received by July 25, 2011.

ADDRESSES: Send submissions to: CC:PA:LPD:PR (REG–125592–10), Room 5205, Internal Revenue Service, P.O.

Box 7604, Ben Franklin Station, Washington, DC 20044. Submissions may be hand-delivered to: CC:PA:LPD:PR (REG–125592–10), Courier's Desk, Internal Revenue Service, 1111 Constitution Avenue, NW., Washington, DC 20224. Alternatively, taxpayers may submit comments electronically via the Federal eRulemaking Portal at *http://www.regulations.gov* (IRS REG–125592–10).

FOR FURTHER INFORMATION CONTACT: Concerning the regulations, Karen Levin at 202–622–6080; concerning submissions of comments, Oluwafunmilayo Taylor at 202–622–7180 (not toll-free numbers).

SUPPLEMENTARY INFORMATION:

Background and Explanation of Provisions

The temporary regulations published elsewhere in this issue of the **Federal Register** amend § 54.9815–2719T of the Miscellaneous Excise Tax Regulations. The proposed and temporary regulations are being published as part of a joint rulemaking with the Department of Labor and the Department of Health and Human Services (the joint rulemaking). The text of those temporary regulations also serves as the text of these proposed regulations. The preamble to the temporary regulations explains the temporary regulations and these proposed regulations.

Special Analyses

It has been determined that this notice of proposed rulemaking is not a significant regulatory action as defined in Executive Order 12866. Therefore, a regulatory assessment is not required. It has also been determined that section 553(b) of the Administrative Procedure Act (5 U.S.C. chapter 5) does not apply to this proposed regulation. It is hereby certified that the collections of information contained in this notice of proposed rulemaking will not have a significant impact on a substantial number of small entities. Accordingly, a regulatory flexibility analysis under the Regulatory Flexibility Act (5 U.S.C. chapter 6) is not required. Section 54.9815–2719T of the temporary regulations, as amended, requires both group health insurance issuers and group health plans to establish internal claims and appeals and external review processes for adverse benefit determinations. Those processes require the plan and issuer to disclose evidence relied upon in making an adverse benefit determination, to disclose any new rationale for upholding an adverse benefit determination as part of an internal appeal, to provide notice of an adverse benefit determination and of a final internal adverse benefit determination, and to disclose the right to an external review. Under the temporary regulations, if a health insurance issuer satisfies the obligations to have effective internal claims and appeals and external review processes (including these information collection requirements that are an inherent part of those processes), those obligations are satisfied not just for the issuer but also for the group health plan. For group health plans maintained by small entities, it is anticipated that the health insurance issuer will satisfy those obligations to have effective internal claims and appeals and external review processes (including these information collection requirements that are an inherent part of those processes) for both the plan and the issuer in almost all cases. For this reason, these information collection requirements will not impose a significant impact on a substantial number of small entities. Pursuant to section 7805(f) of the Internal Revenue Code, this regulation has been submitted to the Chief Counsel for Advocacy of the Small Business Administration for comment on its impact on small business.

Comments and Requests for a Public Hearing

Before these proposed regulations are adopted as final regulations, consideration will be given to any written comments (a signed original and eight (8) copies) or electronic comments that are submitted timely to the IRS. Comments are specifically requested on the clarity of the proposed regulations and how they may be made easier to understand. All comments will be available for public inspection and copying. A public hearing may be scheduled if requested in writing by a person that timely submits written comments. If a public hearing is scheduled, notice of the date, time, and place for the hearing will be published in the **Federal Register**.

Drafting Information

The principal author of these proposed regulations is Karen Levin, Office of the Division Counsel/Associate Chief Counsel (Tax Exempt and Government Entities), IRS. The proposed regulations, as well as the temporary regulations, have been developed in coordination with personnel from the U.S. Department of Labor and the U.S. Department of Health and Human Services.

List of Subjects in 26 CFR Part 54

Excise taxes, Health care, Health insurance, Pensions, Reporting and recordkeeping requirements.

Proposed Amendments to the Regulations

Accordingly, 26 CFR part 54 is proposed to be amended as follows:

PART 54—PENSION EXCISE TAXES

Paragraph 1. The authority citation for part 54 continues to read in part as follows:

Authority: 26 U.S.C. 7805 * * *

Par. 2. Proposed § 54.9815–2719 as published on July 23, 2010, 75 FR 43330, is amended by:

1. Revising paragraphs (b)(2)(ii)(B), (b)(2)(ii)(E)(*1*), (b)(2)(ii)(F), (c)(2)(xi), (c)(3), (d)(1), (d)(2)(iv), and (e).
2. Redesignating (b)(2)(ii)(E)(*2*), (b)(2)(ii)(E)(*3*), and (b)(2)(ii)(E)(*4*) as (b)(2)(ii)(E)(*3*), (b)(2)(ii)(E)(*4*), and (b)(2)(ii)(E)(*5*), respectively.
3. Adding new paragraph (b)(2)(ii)(E)(*2*).

The revisions and addition read as follows:

§ 54.9815–2719 Internal claims and appeals and external review processes.

* * * * *

(b) * * *

(2) * * *

(ii) * * *

(B) [The text of proposed § 54.9815–2719(b)(2)(ii)(B) is the same as the text of § 54.9815–2719T(b)(2)(ii)(B) published elsewhere in this issue of the **Federal Register**].

* * * * *

(E) * * *

(*1*) [The text of proposed § 54.9815–2719(b)(2)(ii)(E)(*1*) is the same as the text of § 54.9815–2719T(b)(2)(ii)(E)(*1*) published elsewhere in this issue of the **Federal Register**].

(*2*) [The text of proposed § 54.9815–2719(b)(2)(ii)(E)(*2*) is the same as the text of § 54.9815–2719T(b)(2)(ii)(E)(*2*) published elsewhere in this issue of the **Federal Register**].

* * * * *

(F) [The text of proposed § 54.9815–2719(b)(2)(ii)(F) is the same as the text of § 54.9815–2719T(b)(2)(ii)(F) published elsewhere in this issue of the **Federal Register**].

* * * * *

(c) * * *

(2) * * *

(xi) [The text of proposed § 54.9815–2719(c)(2)(xi) is the same as the text of § 54.9815–2719T(c)(2)(xi) published elsewhere in this issue of the **Federal Register**].

* * * * *

(3) [The text of proposed § 54.9815–2719(c)(3) is the same as the text of § 54.9815–2719T(c)(3) published elsewhere in this issue of the **Federal Register**].

(d) * * *

(1) [The text of proposed § 54.9815–2719(d)(1) is the same as the text of § 54.9815–2719T(d)(1) published elsewhere in this issue of the **Federal Register**].

* * * * *

(2) * * *

(iv) [The text of proposed § 54.9815–2719(d)(2)(iv) is the same as the text of § 54.9815–2719T(d)(2)(iv) published elsewhere in this issue of the **Federal Register**].

* * * * *

(e) [The text of proposed § 54.9815–2719(e) is the same as the text of § 54.9815–2719T(e) published elsewhere in this issue of the **Federal Register**].

* * * * *

Steven T. Miller,

Deputy Commissioner for Services and Enforcement.

[FR Doc. 2011–15891 Filed 6–22–11; 4:15 pm]

BILLING CODE 4830–01–P

DEPARTMENT OF HOMELAND SECURITY

Coast Guard

33 CFR Part 117

[Docket No. USCG–2011–0268]

RIN 1625–AA09

Drawbridge Operation Regulation; Passaic River, Harrison, NJ

AGENCY: Coast Guard, DHS.

ACTION: Notice of proposed rulemaking.

SUMMARY: The Coast Guard proposes to change the drawbridge operation regulations that govern the operation of the Amtrak's Dock Bridge across the Passaic River, mile 5.0, at Harrison, New Jersey. The owner of the bridge has requested relief from crewing the bridge at all times because the bridge has received few requests to open during past years. It is expected that an advance notice requirement for bridge openings could provide relief to the bridge owner while continuing to meet the reasonable needs of navigation.

DATES: Comments and related material must be received by the Coast Guard on or before August 23, 2011.

ADDRESSES: You may submit comments identified by docket number USCG–2011–0268 using any one of the following methods:

(1) *Federal Rulemaking Portal: http://www.regulations.gov.*

(2) *Fax:* 202–493–2251.

(3) *Mail:* Docket Management Facility (M–30), U.S. Department of Transportation, West Building Ground Floor, Room W12–140, 1200 New Jersey Avenue, SE., Washington, DC, 20590–0001.

(4) *Hand delivery:* Same as mail address above, between 9 a.m. and 5 p.m., Monday through Friday, except Federal holidays. The telephone number is 202–366–9329.

To avoid duplication, please use only one of these methods. See the ''Public Participation and Request for Comments'' portion of the **SUPPLEMENTARY INFORMATION** section below for instructions on submitting comments.

FOR FURTHER INFORMATION CONTACT: If you have questions on this proposed rule, call or e-mail Mr. John W. McDonald, Project Officer, First Coast Guard District Bridge Program, telephone (617) 223–8364, e-mail *john.w.mcdonald@uscg.mil.* If you have questions on viewing or submitting material to the docket, call Renee V. Wright, Program Manager, Docket Operations, telephone 202–366–9826.

SUPPLEMENTARY INFORMATION:

Public Participation and Request for Comments

We encourage you to participate in this rulemaking by submitting comments and related materials. All comments received will be posted, without change to *http://www.regulations.gov* and will include any personal information you have provided.

Submitting comments

If you submit a comment, please include the docket number for this rulemaking (USCG–2011–0268), indicate the specific section of this document to which each comment applies, and provide a reason for each suggestion or recommendation. You may submit your comments and material online (*http://www.regulations.gov,*) or by fax, mail or hand delivery, but please use only one of these means. If you submit a comment online via *http://www.regulations.gov,* it will be considered received by the Coast Guard when you successfully transmit the comment. If you fax, hand delivery, or mail your comment, it will be considered as having been received by the Coast Guard when it is received at the Docket Management Facility. We recommend that you include your name and a mailing address, an e-mail address, or a phone number in the body of your document so that we can contact you if we have questions regarding your submission.

To submit your comment online, go to *http://www.regulations.gov,* click on the ''submit a comment'' box, which will then become highlighted in blue. In the ''Document Type'' drop down menu select ''Proposed Rules'' and insert ''USCG–2011–0268'' in the ''Keyword'' box. Click ''Search'' then click on the balloon shape in the ''Actions'' column. If you submit your comments by mail or hand delivery, submit them in an unbound format, no larger than 8½ by 11 inches, suitable for copying and electronic filing. If you submit them by mail and would like to know that they reached the Facility, please enclose a stamped, self-addressed postcard or envelope. We will consider all comments and material received during the comment period and may change the rule based on your comments.

Viewing comments and documents

To view comments, as well as documents mentioned in this preamble as being available in the docket, go to *http://www.regulations.gov,* click on the ''read comments'' box, which will then become highlighted in blue. In the ''Keyword'' box insert ''USCG–2011–0268'' and click ''Search.'' Click the ''Open Docket Folder'' in the ''Actions'' column. You may also visit either the Docket Management Facility in Room W12–140 on the ground floor of the Department of Transportation West Building, 1200 New Jersey Avenue, SE., Washington, DC, 20590, between 9 a.m. and 5 p.m., Monday through Friday, except Federal holidays. We have an agreement with the Department of Transportation to use the Docket Management Facility.

Privacy Act

Anyone can search the electronic form of comments received into any of our dockets by the name of the individual submitting the comment (or signing the comment, if submitted on behalf of an association, business, labor union, etc.). You may review a Privacy Act notice regarding our public dockets in the January 17, 2008, issue of the **Federal Register** (73 FR 3316).

Public Meeting

We do not now plan to hold a public meeting. But you may submit a request for one using one of the four methods specified under **ADDRESSES**. Please explain why one would be beneficial. If

we determine that one would aid this rulemaking, we will hold one at a time and place announced by a later notice in the **Federal Register**.

Basis and Purpose

The Amtrak Dock Bridge, mile 5.0, across the Passaic River, at Harrison, New Jersey, has a vertical clearance in the closed position of 24 feet at mean high water and 29 feet at mean low water. The drawbridge operation regulations are listed at 33 CFR 117.739(e).

The existing drawbridge operation regulations require the draw to open on signal; except that, from 7:20 a.m. to 9:20 a.m. and 4:30 p.m. to 6:50 p.m., Monday through Friday, except Federal holidays, the draw need not be opened. At all other times, an opening may be delayed no more than ten minutes, unless the draw tender and the vessel operator, communicating by radio-telephone, agree to a longer delay.

The bridge has received only eight requests to open during the past three years.

The Coast Guard received a request from the owner of the bridge, National Railroad Passenger Corporation (Amtrak), for relief from crewing the bridge at all times. Amtrak requested that a twenty-four hour advance notice be required for all bridge openings, except during the existing morning and afternoon closed periods.

As a result of the fact that the bridge has received only eight requests to open during the past three years, the Coast Guard believes it is reasonable for the bridge owner to require a twenty-four hour advance notice for bridge openings and that doing so would continue to meet the reasonable needs of navigation.

Discussion of Proposed Rule

The Coast Guard proposes to amend 33 CFR 117.739 by changing the current requirement from the bridge opening on signal to the bridge opening after a required twenty-four hour advance notice is provided. The closed periods, 7:20 a.m. to 9:20 a.m. and 4:30 p.m. to 6:50 p.m., Monday through Friday, except Federal holidays, would remain in the revised regulation.

We will eliminate the reference to communicating by radio telephone from the regulations since that is no longer the only method of communicating with the bridge.

Regulatory Analyses

We developed this proposed rule after considering numerous statutes and executive orders related to rulemaking. Below we summarize our analyses based on 13 of these statutes or executive orders.

Regulatory Planning and Review

This proposed rule is not a ''significant regulatory action'' under section 3(f) of Executive Order 12866, Regulatory Planning and Review, as supplemented by Executive Order 13563, Improving Regulation and Regulatory Review, and does not require an assessment of potential costs and benefits under section 6(a)(3) of Executive Order 12866 or under section 1 of Executive Order 13563. The Office of Management and Budget has not reviewed it under those Orders.

We expect the economic impact of this proposed rule to be minimal. Although this regulation may have some impact on the public, the potential impact will be minimized for the following reasons:

The bridge has only received eight requests to open during the past three years. The bridge openings can still be obtained at any time, except the morning and afternoon closed periods, by providing at least a twenty-four hour advance notice.

Small Entities

Under the Regulatory Flexibility Act (5 U.S.C. 601–612), we have considered whether this proposed rule would have a significant economic impact on a substantial number of small entities. The term ''small entities'' comprises small businesses, not-for-profit organizations that are independently owned and operated and are not dominant in their fields, and governmental jurisdictions with populations of less than 50,000.

The Coast Guard certifies under 5 U.S.C. 605(b) that this proposed rule would not have a significant economic impact on a substantial number of small entities. This proposed rule would affect the following entities, some of which might be small entities: The owners or operators of vessels needing to transit the bridge.

This proposed rule would not have a significant economic impact on a substantial number of small entities for the following reasons:

The bridge only received eight requests to open during the past three years. The bridge openings can still be obtained at any time, except during the Monday through Friday closed periods, by providing a twenty-four hour advance notice.

If you think that your business, organization, or governmental jurisdiction qualifies as a small entity and that this rule would have a significant economic impact on it, please submit a comment (see **ADDRESSES**) explaining why you think it qualifies and how and to what degree this rule would economically affect it.

Assistance for Small Entities

Under section 213(a) of the Small Business Regulatory Enforcement Fairness Act of 1996 (Pub. L. 104–121), we want to assist small entities in understanding this proposed rule so that they can better evaluate its effects on them and participate in the rulemaking. If the rule would affect your small business, organization, or governmental jurisdiction and you have questions concerning its provisions or options for compliance, please contact Mr. John W. McDonald, Project Officer, First Coast Guard District Bridge Program, telephone 617–223–8364 or e-mail *John.w.mcdonald@uscg.mil.*

The Coast Guard will not retaliate against small entities that question or complain about this proposed rule or any policy or action of the Coast Guard.

Collection of Information

This proposed rule would call for no new collection of information under the Paperwork Reduction Act of 1995 (44 U.S.C. 3501–3520.).

Federalism

A rule has implications for federalism under Executive Order 13132, Federalism, if it has a substantial direct effect on State or local governments and would either preempt State law or impose a substantial direct cost of compliance on them. We have analyzed this proposed rule under that Order and have determined that it does not have implications for federalism.

Unfunded Mandates Reform Act

The Unfunded Mandates Reform Act of 1995 (2 U.S.C. 1531–1538) requires Federal agencies to assess the effects of their discretionary regulatory actions. In particular, the Act addresses actions that may result in the expenditure by a State, local, or tribal government, in the aggregate, or by the private sector of $100,000,000 (adjusted for inflation) or more in any one year. Though this proposed rule will not result in such an expenditure, we do discuss the effects of this rule elsewhere in this preamble.

Taking of Private Property

This proposed rule would not cause a taking of private property or otherwise have taking implications under Executive Order 12630, Governmental Actions and Interference with Constitutionally Protected Property Rights.

Civil Justice Reform

This proposed rule meets applicable standards in sections 3(a) and 3(b)(2) of Executive Order 12988, Civil Justice Reform, to minimize litigation, eliminate ambiguity, and reduce burden.

Protection of Children

We have analyzed this proposed rule under Executive Order 13045, Protection of Children from Environmental Health Risks and Safety Risks. This rule is not an economically significant rule and would not create an environmental risk to health or risk to safety that might disproportionately affect children.

Indian Tribal Governments

This proposed rule does not have tribal implications under Executive Order 13175, Consultation and Coordination with Indian Tribal Governments, because it would not have a substantial direct effect on one or more Indian tribes, on the relationship between the Federal Government and Indian tribes, or on the distribution of power and responsibilities between the Federal Government and Indian tribes.

Energy Effects

We have analyzed this proposed rule under Executive Order 13211, Actions Concerning Regulations That Significantly Affect Energy Supply, Distribution, or Use. We have determined that it is not a ''significant energy action'' under that order because it is not a ''significant regulatory action'' under Executive Order 12866 and is not likely to have a significant adverse effect on the supply, distribution, or use of energy. The Administrator of the Office of Information and Regulatory Affairs has not designated it as a significant energy action. Therefore, it does not require a Statement of Energy Effects under Executive Order 13211.

Technical Standards

The National Technology Transfer and Advancement Act (NTTAA) (15 U.S.C. 272 note) directs agencies to use voluntary consensus standards in their regulatory activities unless the agency provides Congress, through the Office of Management and Budget, with an explanation of why using these standards would be inconsistent with applicable law or otherwise impractical. Voluntary consensus standards are technical standards (*e.g.,* specifications of materials, performance, design, or operation; test methods; sampling procedures; and related management systems practices) that are developed or adopted by voluntary consensus standards bodies.

This proposed rule does not use technical standards. Therefore, we did not consider the use of voluntary consensus standards.

Environment

We have analyzed this proposed rule under Department of Homeland Security Management Directive 023–01, and Commandant Instruction M16475.lD which guides the Coast Guard in complying with the National Environmental Policy Act of 1969 (NEPA) (42 U.S.C. 4321–4370f), and have made a preliminary determination that this action is one of a category of actions which do not individually or cumulatively have a significant effect on the human environment because it simply promulgates the operating regulations or procedures for drawbridges. We seek any comments or information that may lead to the discovery of a significant environmental impact from this proposed rule.

List of Subjects in 33 CFR Part 117

Bridges.

For the reasons discussed in the preamble, the Coast Guard proposes to amend 33 CFR part 117 as follows:

PART 117—DRAWBRIDGE OPERATION REGULATIONS

1. The authority citation for part 117 continues to read as follows:

Authority: 33 U.S.C. 499; 33 CFR 1.05–1; Department of Homeland Security Delegation No. 0170.1.

2. Revise § 33 CFR 117.739 paragraph (e) to read as follows:

§ 117.739 Passaic River.

* * * * *

(e) The draw of the Amtrak Dock Bridge, mile 5.0, at Harrison, shall open on signal after at least a twenty four hour advance notice is given by calling the number posted at the bridge; except that, from 7:20 a.m. to 9:20 a.m. and from 4:30 p.m. to 6:50 p.m., Monday through Friday, except Federal holidays, the draw need not be opened for the passage of vessel traffic. At all other times, a bridge opening may be delayed no more than ten minutes for the passage of rail traffic, unless the draw tender and the vessel operator agree to a longer delay.

* * * * *

Dated: June 10, 2011.

Daniel A. Neptun,

Rear Admiral, U.S. Coast Guard, Commander, First Coast Guard District.

[FR Doc. 2011–15807 Filed 6–23–11; 8:45 am]

BILLING CODE 9110–04–P

DEPARTMENT OF HOMELAND SECURITY

Coast Guard

33 CFR Part 117

[Docket No. USCG–2011–0335]

RIN 1625–AA09

Drawbridge Operation Regulation; Apponagansett River, Dartmouth, MA

AGENCY: Coast Guard, DHS.

ACTION: Notice of proposed rulemaking.

SUMMARY: The Coast Guard proposes to change the drawbridge operation regulations that govern the operation of the Padanaram Bridge across the Apponagansett River, mile 1.0, at Dartmouth, Massachusetts. The owner of the bridge has requested relief from crewing the bridge in the early morning hours when there have been no requests to open the bridge. It is expected that this change to the regulations would provide relief to the bridge owner while continuing to meet the reasonable needs of navigation.

DATES: Comments and related material must be received by the Coast Guard on or before August 23, 2011.

ADDRESSES: You may submit comments identified by docket number USCG–2011–0335 using any one of the following methods:

(1) *Federal Rulemaking Portal: http://www.regulations.gov.*

(2) *Fax:* 202–493–2251.

(3) *Mail:* Docket Management Facility (M–30), U.S. Department of Transportation, West Building Ground Floor, Room W12–140, 1200 New Jersey Avenue, SE., Washington, DC 20590–0001.

(4) *Hand delivery:* Same as mail address above, between 9 a.m. and 5 p.m., Monday through Friday, except Federal holidays. The telephone number is 202–366–9329.

To avoid duplication, please use only one of these methods. See the ''Public Participation and Request for Comments'' portion of the **SUPPLEMENTARY INFORMATION** section below for instructions on submitting comments.

FOR FURTHER INFORMATION CONTACT: If you have questions on this proposed rule, call or e-mail Mr. John W.

McDonald, Project Officer, First Coast Guard District Bridge Program, telephone (617) 223–8364, e-mail *john.w.mcdonald@uscg.mil.* If you have questions on viewing or submitting material to the docket, call Renee V. Wright, Program Manager, Docket Operations, telephone 202–366–9826.

SUPPLEMENTARY INFORMATION:

Public Participation and Request for Comments

We encourage you to participate in this rulemaking by submitting comments and related materials. All comments received will be posted, without change to *http://www.regulations.gov* and will include any personal information you have provided.

Submitting Comments

If you submit a comment, please include the docket number for this rulemaking (USCG–2011–0335), indicate the specific section of this document to which each comment applies, and provide a reason for each suggestion or recommendation. You may submit your comments and material online (*http://www.regulations.gov*), or by fax, mail or hand delivery, but please use only one of these means. If you submit a comment online via *http://www.regulations.gov*, it will be considered received by the Coast Guard when you successfully transmit the comment. If you fax, hand delivery, or mail your comment, it will be considered as having been received by the Coast Guard when it is received at the Docket Management Facility. We recommend that you include your name and a mailing address, an e-mail address, or a phone number in the body of your document so that we can contact you if we have questions regarding your submission.

To submit your comment online, go to *http://www.regulations.gov,* click on the ''submit a comment'' box, which will then become highlighted in blue. In the ''Document Type'' drop down menu select ''Proposed Rules'' and insert ''USCG–2011–0335'' in the ''Keyword'' box. Click ''Search'' then click on the balloon shape in the ''Actions'' column. If you submit your comments by mail or hand delivery, submit them in an unbound format, no larger than 8½; by 11 inches, suitable for copying and electronic filing. If you submit them by mail and would like to know that they reached the Facility, please enclose a stamped, self-addressed postcard or envelope. We will consider all comments and material received during the comment period and may change the rule based on your comments.

Viewing Comments and Documents

To view comments, as well as documents mentioned in this preamble as being available in the docket, go to *http://www.regulations.gov,* click on the ''read comments'' box, which will then become highlighted in blue. In the ''Keyword'' box insert ''USCG–2011–0335'' and click ''Search.'' Click the ''Open Docket Folder'' in the ''Actions'' column. You may also visit either the Docket Management Facility in Room W12–140 on the ground floor of the Department of Transportation West Building, 1200 New Jersey Avenue, SE., Washington, DC 20590, between 9 a.m. and 5 p.m., Monday through Friday, except Federal holidays. We have an agreement with the Department of Transportation to use the Docket Management Facility.

Privacy Act

Anyone can search the electronic form of comments received into any of our dockets by the name of the individual submitting the comment (or signing the comment, if submitted on behalf of an association, business, labor union, etc.). You may review a Privacy Act notice regarding our public dockets in the January 17, 2008, issue of the **Federal Register** (73 FR 3316).

Public Meeting

We do not now plan to hold a public meeting. But you may submit a request for one using one of the four methods specified under **ADDRESSES**. Please explain why one would be beneficial. If we determine that one would aid this rulemaking, we will hold one at a time and place announced by a later notice in the **Federal Register**.

Basis and Purpose

The Padanaram Bridge, mile 1.0, across the Apponagansett River at Dartmouth, Massachusetts, has a vertical clearance in the closed position of 9 feet at mean high water and 12 feet at mean low water. The drawbridge operation regulations are listed at 33 CFR 117.587.

The existing drawbridge operation regulations require the draw to open on signal 1 May through 31 October from 5 a.m. to 9 p.m., daily. At all other times the bridge shall open if at least four hours advance notice is given.

The Coast Guard received a request from the owner of the bridge, the Town of Dartmouth, to change the drawbridge operation regulations concerning the daily hours the bridge is crewed from 1 May through 31 October. The bridge owner desires to crew the bridge from 6 a.m. through 9 p.m. instead of 5 a.m. through 9 p.m., daily.

A review of the bridge opening logs reveals that the bridge has not received any requests to open between 5 a.m. and 6 a.m. since 2009.

As a result of the above information the Coast Guard believes it is reasonable for the bridge owner to crew the Padanaram Bridge from 6 a.m. through 9 p.m., 1 May through 31 October, since there have been no recent requests to open the bridge before 6 a.m.

Discussion of Proposed Rule

The Coast Guard proposes to amend 33 CFR 117.587(a) and (a)(1) by changing the time the bridge will open on signal between 1 May and 31 October. Presently the bridge opens on signal from 5 a.m. through 9 p.m., daily. This action would change that time period to 6 a.m. through 9 p.m., daily. All other requirements of the regulation would remain unchanged.

Regulatory Analyses

We developed this proposed rule after considering numerous statutes and executive orders related to rulemaking. Below we summarize our analyses based on 13 of these statutes or executive orders.

Regulatory Planning and Review

This proposed rule is not a ''significant regulatory action'' under section 3(f) of Executive Order 12866, Regulatory Planning and Review, as supplemented by Executive Order 13563, Improving Regulation and Regulatory Review, and does not require an assessment of potential costs and benefits under section 6(a)(3) of Executive Order 12866 or under section 1 of Executive Order 13563. The Office of Management and Budget has not reviewed it under those Orders. We expect the economic impact of this proposed rule to be minimal. Although this regulation may have some impact on the public, the potential impact will be minimized for the following reasons:

The bridge has not received any recent requests to open between 5 a.m. and 6 a.m., daily, between May 1 and October 31. The vessels moored upstream from the bridge are recreational vessels and not commercial operators.

Small Entities

Under the Regulatory Flexibility Act (5 U.S.C. 601–612), we have considered whether this proposed rule would have a significant economic impact on a substantial number of small entities. The term ''small entities'' comprises

small businesses, not-for-profit organizations that are independently owned and operated and are not dominant in their fields, and governmental jurisdictions with populations of less than 50,000.

The Coast Guard certifies under 5 U.S.C. 605(b) that this proposed rule would not have a significant economic impact on a substantial number of small entities. This proposed rule would affect the following entities, some of which might be small entities: the owners or operators of vessels needing to transit through the bridge between 1 May through 31 October from 5 a.m. to 6 a.m. This proposed rule would not have a significant economic impact on a substantial number of small entities for the following reasons:

The bridge has not received any requests to open between 5 a.m. and 6 a.m., daily, between May 1 and October 31, since 2009.

If you think that your business, organization, or governmental jurisdiction qualifies as a small entity and that this rule would have a significant economic impact on it, please submit a comment (see **ADDRESSES**) explaining why you think it qualifies and how and to what degree this rule would economically affect it.

Assistance for Small Entities

Under section 213(a) of the Small Business Regulatory Enforcement Fairness Act of 1996 (Pub. L. 104–121), we want to assist small entities in understanding this proposed rule so that they can better evaluate its effects on them and participate in the rulemaking. If the rule would affect your small business, organization, or governmental jurisdiction and you have questions concerning its provisions or options for compliance, please contact Mr. John W. McDonald, Project Officer, First Coast Guard District Bridge Program, telephone 617–223–8364 or e-mail *John.w.mcdonald@uscg.mil.*

The Coast Guard will not retaliate against small entities that question or complain about this proposed rule or any policy or action of the Coast Guard.

Collection of Information

This proposed rule would call for no new collection of information under the Paperwork Reduction Act of 1995 (44 U.S.C. 3501–3520.).

Federalism

A rule has implications for federalism under Executive Order 13132, Federalism, if it has a substantial direct effect on State or local governments and would either preempt State law or impose a substantial direct cost of compliance on them. We have analyzed this proposed rule under that Order and have determined that it does not have implications for federalism.

Unfunded Mandates Reform Act

The Unfunded Mandates Reform Act of 1995 (2 U.S.C. 1531–1538) requires Federal agencies to assess the effects of their discretionary regulatory actions. In particular, the Act addresses actions that may result in the expenditure by a State, local, or tribal government, in the aggregate, or by the private sector of $100,000,000 (adjusted for inflation) or more in any one year. Though this proposed rule will not result in such an expenditure, we do discuss the effects of this rule elsewhere in this preamble.

Taking of Private Property

This proposed rule would not cause a taking of private property or otherwise have taking implications under Executive Order 12630, Governmental Actions and Interference with Constitutionally Protected Property Rights.

Civil Justice Reform

This proposed rule meets applicable standards in sections 3(a) and 3(b)(2) of Executive Order 12988, Civil Justice Reform, to minimize litigation, eliminate ambiguity, and reduce burden.

Protection of Children

We have analyzed this proposed rule under Executive Order 13045, Protection of Children from Environmental Health Risks and Safety Risks. This rule is not an economically significant rule and would not create an environmental risk to health or risk to safety that might disproportionately affect children.

Indian Tribal Governments

This proposed rule does not have tribal implications under Executive Order 13175, Consultation and Coordination with Indian Tribal Governments, because it would not have a substantial direct effect on one or more Indian tribes, on the relationship between the Federal Government and Indian tribes, or on the distribution of power and responsibilities between the Federal Government and Indian tribes.

Energy Effects

We have analyzed this proposed rule under Executive Order 13211, Actions Concerning Regulations That Significantly Affect Energy Supply, Distribution, or Use. We have determined that it is not a ''significant energy action'' under that order because it is not a ''significant regulatory action'' under Executive Order 12866 and is not likely to have a significant adverse effect on the supply, distribution, or use of energy. The Administrator of the Office of Information and Regulatory Affairs has not designated it as a significant energy action. Therefore, it does not require a Statement of Energy Effects under Executive Order 13211.

Technical Standards

The National Technology Transfer and Advancement Act (NTTAA) (15 U.S.C. 272 note) directs agencies to use voluntary consensus standards in their regulatory activities unless the agency provides Congress, through the Office of Management and Budget, with an explanation of why using these standards would be inconsistent with applicable law or otherwise impractical. Voluntary consensus standards are technical standards (e.g., specifications of materials, performance, design, or operation; test methods; sampling procedures; and related management systems practices) that are developed or adopted by voluntary consensus standards bodies.

This proposed rule does not use technical standards. Therefore, we did not consider the use of voluntary consensus standards.

Environment

We have analyzed this proposed rule under Department of Homeland Security Management Directive 023–01, and Commandant Instruction M16475.lD which guides the Coast Guard in complying with the National Environmental Policy Act of 1969 (NEPA)(42 U.S.C. 4321–4370f), and have made a preliminary determination that this action is one of a category of actions which do not individually or cumulatively have a significant effect on the human environment because it simply promulgates the operating regulations or procedures for drawbridges. We seek any comments or information that may lead to the discovery of a significant environmental impact from this proposed rule.

List of Subjects in 33 CFR Part 117

Bridges.

For the reasons discussed in the preamble, the Coast Guard proposes to amend 33 CFR part 117 as follows:

PART 117—DRAWBRIDGE OPERATION REGULATIONS

1. The authority citation for part 117 continues to read as follows:

Authority: 33 U.S.C. 499; 33 CFR 1.05–1; Department of Homeland Security Delegation No. 0170.1.

2. Amend § 117.587 by revising paragraphs (a) introductory text and (a)(1) to read as follows:

§ 117.587 Apponagansett River.

(a) The draw of the Padanaram Bridge, mile 1.0, shall open on signal from 1 May through 31 October, between 6 a.m. and 9 p.m., daily, as follows:

(1) The bridge shall open on signal, twice an hour, on the hour and half hour between 6 a.m. and 9 a.m. and between 8 p.m. and 9 p.m.

* * * * *

Dated: June 10, 2011.

Daniel A. Neptun,

Rear Admiral, U.S. Coast Guard, Commander, First Coast Guard District.

[FR Doc. 2011–15809 Filed 6–23–11; 8:45 am]

BILLING CODE 9110–04–P

ENVIRONMENTAL PROTECTION AGENCY

40 CFR Part 52

[EPA–R09–OAR–2011–0412; FRL–9324–1]

Revisions to the California State Implementation Plan, San Joaquin Valley Unified Air Pollution Control District

AGENCY: Environmental Protection Agency (EPA).

ACTION: Proposed rule.

SUMMARY: EPA is proposing to approve revisions to the San Joaquin Valley Unified Air Pollution Control District (SJVUAPCD) portion of the California State Implementation Plan (SIP). These revisions concern oxides of nitrogen (NO_X) and particulate matter (PM) emissions from glass melting furnaces. We are approving a local rule that regulates these emission sources under the Clean Air Act as amended in 1990 (CAA or the Act). We are taking comments on this proposal and plan to follow with a final action.

DATES: Any comments must arrive by July 25, 2011.

ADDRESSES: Submit comments, identified by docket number EPA–R09–OAR–2011–0412, by one of the following methods:

1. *Federal eRulemaking Portal: http://www.regulations.gov.* Follow the on-line instructions.
2. *E-mail: steckel.andrew@epa.gov.*
3. *Mail or deliver:* Andrew Steckel (Air–4), U.S. Environmental Protection Agency Region IX, 75 Hawthorne Street, San Francisco, CA 94105–3901.

Instructions: All comments will be included in the public docket without change and may be made available online at *http://www.regulations.gov,* including any personal information provided, unless the comment includes Confidential Business Information (CBI) or other information whose disclosure is restricted by statute. Information that you consider CBI or otherwise protected should be clearly identified as such and should not be submitted through *http://www.regulations.gov* or e-mail. *http://www.regulations.gov* is an ''anonymous access'' system, and EPA will not know your identity or contact information unless you provide it in the body of your comment. If you send e-mail directly to EPA, your e-mail address will be automatically captured and included as part of the public comment. If EPA cannot read your comment due to technical difficulties and cannot contact you for clarification, EPA may not be able to consider your comment.

Docket: Generally, documents in the docket for this action are available electronically at *http://www.regulations.gov* and in hard copy at EPA Region IX, 75 Hawthorne Street, San Francisco, California. While all documents in the docket are listed at *http://www.regulations.gov,* some information may be publicly available only at the hard copy location (*e.g.,* copyrighted material, large maps), and some may not be publicly available in either location (*e.g.,* CBI). To inspect the hard copy materials, please schedule an appointment during normal business hours with the contact listed in the **FOR FURTHER INFORMATION CONTACT** section.

FOR FURTHER INFORMATION CONTACT: Idalia Pérez, EPA Region IX, (415) 972–3248, *perez.idalia@epa.gov.*

SUPPLEMENTARY INFORMATION: Throughout this document, ''we,'' ''us'' and ''our'' refer to EPA.

Table of Contents

I. The State's Submittal
A. What rule did the State submit?
B. Are there other versions of this rule?
C. What is the purpose of the submitted rule revision?
II. EPA's Evaluation and Action
A. How is EPA evaluating the rule?
B. Does the rule meet the evaluation criteria?
C. EPA Recommendations to Further Improve the Rule
D. Public Comment and Final Action
III. Statutory and Executive Order Reviews

I. The State's Submittal

A. What rule did the State submit?

Table 1 lists the rule addressed by this proposal with the date that it was adopted by the local air agency and submitted by the California Air Resources Board (CARB).

TABLE 1—SUBMITTED RULE

Local agency	Rule No.	Rule title	Adopted	Submitted
SJVUAPCD	4354	Glass Melting Furnaces	09/16/10	04/05/11

On May 6, 2011, EPA determined that the submittal for SJVUAPCD Rule 4354 met the completeness criteria in 40 CFR part 51 Appendix V, which must be met before formal EPA review.

B. Are there other versions of this rule?

We approved an earlier version of Rule 4354 into the SIP on August 17, 2006 (72 FR 41894). The SJVUAPCD adopted revisions to the SIP-approved version on October 16, 2008 but did not submit it to us.

C. What is the purpose of the submitted rule revision?

NO_X helps produce ground-level ozone, smog and PM, which harm human health and the environment. PM contributes to effects that are harmful to human health and the environment, including premature mortality, aggravation of respiratory and cardiovascular disease, decreased lung function, visibility impairment, and damage to vegetation and ecosystems. Section 110(a) of the CAA requires States to submit regulations that control NO_X and PM emissions. Rule 4354 limits NO_X, oxides of sulfur (SO_X), PM_{10}, volatile organic compounds (VOCs) and carbon monoxide (CO) emissions from glass melting furnaces. EPA's technical support document (TSD) has more information about this rule.

II. EPA's Evaluation and Action

A. How is EPA evaluating the rule?

Generally, SIP rules must be enforceable (see section 110(a) of the Act), must require Reasonably Available Control Technology (RACT) for each category of sources covered by a Control Techniques Guidelines (CTG) document as well as each major source in nonattainment areas (see sections 182(b)(2) and 182(f)), must not interfere with any applicable requirements concerning attainment and reasonable further progress (RFP) or any other applicable requirement of the Act (CAA 110(l)) or modify, in a nonattainment area, any SIP-approved control requirement in effect before November 15, 1990 (CAA 193). The SJVUAPCD regulates an ozone and nonattainment area (see 40 CFR part 81), so Rule 4354 must fulfill RACT.

Guidance and policy documents that we use to evaluate enforceability and RACT requirements consistently include the following:

1. ''State Implementation Plans; Nitrogen Oxides Supplement to the General Preamble; Clean Air Act Amendments of 1990 Implementation of Title I; Proposed Rule,'' (the NO_X Supplement), 57 FR 55620, November 25, 1992.

2. ''Issues Relating to VOC Regulation Cutpoints, Deficiencies, and Deviations,'' EPA, May 25, 1988 (the Bluebook).

3. ''Guidance Document for Correcting Common VOC & Other Rule Deficiencies,'' EPA Region 9, August 21, 2001 (the Little Bluebook).

4. ''Improving Air Quality with Economic Incentive Programs,'' US EPA, January 2001.

5. ''Interim White Paper—Midwest RPO Candidate Control Measure: Glass Manufacturing'', Lake Michigan Air Directors Consortium, December 12, 2005.

6. ''Alternative Control Techniques Document— NO_X Emissions from Glass Manufacturing'', US EPA, June 1994.

7. ''Integrated Pollution Prevention and Control (IPPC) Reference Document on Best Available Techniques in the Glass Manufacturing Industry'', European Commission, December 2001.

B. Does the rule meet the evaluation criteria?

We believe this rule is consistent with the relevant policy and guidance regarding enforceability, RACT, and SIP relaxations. The TSD has more information on our evaluation.

C. EPA Recommendations to Further Improve the Rule

The TSD describes additional rule revisions that we recommend for the next time the local agency modifies the rule but are not currently the basis for rule disapproval.

D. Public Comment and Final Action

Because EPA believes the submitted rule fulfills all relevant requirements, we are proposing to fully approve it as described in section 110(k)(3) of the Act. We will accept comments from the public on this proposal for the next 30 days. Unless we receive convincing new information during the comment period, we intend to publish a final approval action that will incorporate this rule into the federally enforceable SIP.

III. Statutory and Executive Order Reviews

Under the Clean Air Act, the Administrator is required to approve a SIP submission that complies with the provisions of the Act and applicable Federal regulations. 42 U.S.C. 7410(k); 40 CFR 52.02(a). Thus, in reviewing SIP submissions, EPA's role is to approve State choices, provided that they meet the criteria of the Clean Air Act. Accordingly, this action merely approves State law as meeting Federal requirements and does not impose additional requirements beyond those imposed by State law. For that reason, this action:

- Is not a ''significant regulatory action'' subject to review by the Office of Management and Budget under Executive Order 12866 (58 FR 51735, October 4, 1993);
- Does not impose an information collection burden under the provisions of the Paperwork Reduction Act (44 U.S.C. 3501 *et seq.*);
- Is certified as not having a significant economic impact on a substantial number of small entities under the Regulatory Flexibility Act (5 U.S.C. 601 *et seq.*);
- Does not contain any unfunded mandate or significantly or uniquely affect small governments, as described in the Unfunded Mandates Reform Act of 1995 (Pub. L. 104–4);
- Does not have Federalism implications as specified in Executive Order 13132 (64 FR 43255, August 10, 1999);
- Is not an economically significant regulatory action based on health or safety risks subject to Executive Order 13045 (62 FR 19885, April 23, 1997);
- Is not a significant regulatory action subject to Executive Order 13211 (66 FR 28355, May 22, 2001);
- Is not subject to requirements of Section 12(d) of the National Technology Transfer and Advancement Act of 1995 (15 U.S.C. 272 note) because application of those requirements would be inconsistent with the Clean Air Act; and
- Does not provide EPA with the discretionary authority to address disproportionate human health or environmental effects with practical, appropriate, and legally permissible methods under Executive Order 12898 (59 FR 7629, February 16, 1994).

In addition, this rule does not have tribal implications as specified by Executive Order 13175 (65 FR 67249, November 9, 2000), because the SIP is not approved to apply in Indian country located in the State, and EPA notes that it will not impose substantial direct costs on tribal governments or preempt tribal law.

List of Subjects in 40 CFR Part 52

Environmental protection, Air pollution control, Intergovernmental relations, Nitrogen dioxide, Ozone, Particulate matter, Reporting and recordkeeping requirements, Volatile organic compounds.

Authority: 42 U.S.C. 7401 *et seq.*

Dated: June 14, 2011.

Jared Blumenfeld,

Regional Administrator, Region IX.

[FR Doc. 2011–15882 Filed 6–23–11; 8:45 am]

BILLING CODE 6560–50–P

ENVIRONMENTAL PROTECTION AGENCY

40 CFR Part 171

[EPA–HQ–OPP–2011–0049; FRL–8863–7]

RIN 2070–AJ77

Synchronizing the Expiration Dates of EPA Pesticide Applicator Certificates With the Underlying State or Tribal Applicator Certificate

AGENCY: Environmental Protection Agency (EPA).

ACTION: Proposed rule.

SUMMARY: Restricted use pesticides (RUP) are those which may generally cause unreasonable adverse effects on the environment without additional restrictions. RUPs may only be applied by or under the direct supervision of an applicator certified as competent by a certifying agency. A State, tribe, or Federal agency becomes a certifying agency by receiving approval from EPA on their certification plan. In areas not covered by a certifying agency, EPA may

establish a Federal certification plan and issue Federal certificates directly. In cases where EPA will issue a Federal certificate based on an existing valid certificate from a certifying agency, this proposed rule would synchronize the expiration dates on the Federal certificate with that of the certificate on which it is based.

DATES: Comments must be received on or before August 23, 2011.

ADDRESSES: Submit your comments, identified by docket identification (ID) number EPA–HQ–OPP–2011–0049, by one of the following methods:

- *Federal eRulemaking Portal: http://www.regulations.gov.* Follow the on-line instructions for submitting comments.
- *Mail:* Office of Pesticide Programs (OPP) Regulatory Public Docket (7502P), Environmental Protection Agency, 1200 Pennsylvania Ave., NW., Washington, DC 20460–0001.
- *Delivery:* OPP Regulatory Public Docket (7502P), Environmental Protection Agency, Rm. S–4400, One Potomac Yard (South Bldg.), 2777 S. Crystal Dr., Arlington, VA. Deliveries are only accepted during the Docket Facility's normal hours of operation (8:30 a.m. to 4 p.m., Monday through Friday, excluding legal holidays). Special arrangements should be made for deliveries of boxed information. The Docket Facility telephone number is (703) 305–5805.

Instructions: Direct your comments to docket ID number EPA–HQ–OPP–2011–0049. EPA's policy is that all comments received will be included in the docket without change and may be made available on-line at *http://www.regulations.gov,* including any personal information provided, unless the comment includes information claimed to be Confidential Business Information (CBI) or other information whose disclosure is restricted by statute. Do not submit information that you consider to be CBI or otherwise protected through regulations.gov or e-mail. The regulations.gov website is an ''anonymous access'' system, which means EPA will not know your identity or contact information unless you provide it in the body of your comment. If you send an e-mail comment directly to EPA without going through *regulations.gov,* your e-mail address will be automatically captured and included as part of the comment that is placed in the docket and made available on the Internet. If you submit an electronic comment, EPA recommends that you include your name and other contact information in the body of your comment and with any disk or CD–ROM you submit. If EPA cannot read your comment due to technical difficulties and cannot contact you for clarification, EPA may not be able to consider your comment. Electronic files should avoid the use of special characters, any form of encryption, and be free of any defects or viruses.

Docket: All documents in the docket are listed in the docket index available at *http://www.regulations.gov.* Although listed in the index, some information is not publicly available, *e.g.,* CBI or other information whose disclosure is restricted by statute. Certain other material, such as copyrighted material, is not placed on the Internet and will be publicly available only in hard copy form. Publicly available docket materials are available either in the electronic docket at *http://www.regulations.gov,* or, if only available in hard copy, at the OPP Regulatory Public Docket in Rm. S–4400, One Potomac Yard (South Bldg.), 2777 S. Crystal Dr., Arlington, VA. The hours of operation of this Docket Facility are from 8:30 a.m. to 4 p.m., Monday through Friday, excluding legal holidays. The Docket Facility telephone number is (703) 305–5805.

FOR FURTHER INFORMATION CONTACT: Amaris Johnson, Field and External Affairs Division (7506P), Office of Pesticide Programs, Environmental Protection Agency, 1200 Pennsylvania Ave., NW., Washington, DC 20460–0001; *telephone number:* (703) 305–9542; *fax number:* (703) 308–2962; *e-mail address: johnson.amaris@epa.gov.*

SUPPLEMENTARY INFORMATION:

I. General Information

A. Does this action apply to me?

You may be potentially affected by this action if you are or intend to become a certified applicator under an EPA Federal certification plan. Certified applicators are included in 3 major industries in the North American Industrial Classification System (NAICS) described as crop production, animal production or exterminating, and pest control services. Potentially affected entities may include, but are not limited to:

- Crop Production (NAICS code 111), *e.g.,* individuals that are private certified applicators on farms.
- Animal Production (NAICS code 112), *e.g.,* individuals that are private certified applicators on farms.
- Exterminating and Pest Control Services (NAICS code 561710), *e.g.,* individuals that are commercial certified applicators for hire.

This listing is not intended to be exhaustive, but rather provides a guide for readers regarding entities likely to be affected by this action. Other types of entities not listed in this unit could also be affected. The NAICS codes have been provided to assist you and others in determining whether this action might apply to certain entities. If you have any questions regarding the applicability of this action to a particular entity, consult the person listed under **FOR FURTHER INFORMATION CONTACT**.

B. What should I consider as I prepare my comments for EPA?

1. *Submitting CBI.* Do not submit CBI to EPA through *regulations.gov* or e-mail. Clearly mark the part or all of the information that you claim to be CBI. For CBI in a disk or CD–ROM that you mail to EPA, mark the outside of the disk or CD–ROM as CBI and then identify electronically within the disk or CD–ROM the specific information that is claimed as CBI. In addition to one complete version of the comment that includes information claimed as CBI, a copy of the comment that does not contain the information claimed as CBI must be submitted for inclusion in the public docket. Information so marked will not be disclosed except in accordance with procedures set forth in 40 CFR part 2.

2. *Tips for preparing your comments.* When submitting comments, remember to:

i. Identify the document by docket ID number and other identifying information (subject heading, **Federal Register** date and page number).

ii. Follow directions. The Agency may ask you to respond to specific questions or organize comments by referencing a Code of Federal Regulations (CFR) part or section number.

iii. Explain why you agree or disagree; suggest alternatives and substitute language for your requested changes.

iv. Describe any assumptions and provide any technical information and/or data that you used.

v. If you estimate potential costs or burdens, explain how you arrived at your estimate in sufficient detail to allow for it to be reproduced.

vi. Provide specific examples to illustrate your concerns and suggest alternatives.

vii. Explain your views as clearly as possible, avoiding the use of profanity or personal threats.

viii. Make sure to submit your comments by the comment period deadline identified.

II. What is the agency's authority for taking this action?

This proposed rule is issued pursuant to the authority given the EPA

Administrator in sections 11 and 25 of the Federal Insecticide, Fungicide, and Rodenticide Act (FIFRA). Section 11 of FIFRA, 7 U.S.C. 136i, requires EPA to provide certification plans for applicators of restricted use pesticides. Section 25 of FIFRA, 7 U.S.C. 136w, authorizes EPA to issue regulations to carry out provisions of FIFRA.

III. What action is the agency taking?

EPA is proposing to amend 40 CFR 171.11(e). This action would synchronize the expiration dates for the EPA Federal and certifying agency certifications of restricted use pesticide applicators. This minor revision does not pose any additional requirement or burden, and is expected to have a beneficial impact on affected entities, without impacting human health or the environment. EPA will benefit through the reduction of administration of Federal certification plans.

IV. Background

Under the provisions of FIFRA section 3(d)(1)(C), EPA shall classify a pesticide for restricted use, if, absent additional regulatory restrictions, the Agency determines that it may generally cause unreasonable adverse effects on the environment. RUPs may only be applied by a certified applicator or under the direct supervision of a certified applicator.

Pesticide applicators can be certified either by a certifying agency (a State, Tribe, or non-EPA Federal agency that has an EPA-approved certification plan), or directly by EPA through a Federal certification plan for an area or situation not covered by a certifying agency's plan. Applicators must demonstrate competency to the certifying agency granting the certificate, according to the requirements of that agency's plan. Currently, all 50 States and four tribes are certifying agencies (*i.e.,* they implement their EPA-approved certification plans). Applicators certified by a State or a certifying tribe may apply RUPs in their State or that tribe's Indian country without a Federal certificate. However, under 40 CFR 171.11, in areas where there is no EPA-approved certification plan in effect (currently, most of Indian country), EPA may implement a Federal plan, thereby allowing applicators to use RUPs in the area covered by the plan after receiving Federal certification. Under 40 CFR 171.11(e), a Federal plan may include an option that allows applicators to be issued an EPA Federal certificate after submitting to EPA a certification form along with documentation of a valid certificate from a certifying agency, without further demonstration of competency.

Applicator certificates have expiration dates to help ensure that certified applicators maintain their competency. All certifying agencies implement a recertification program for applicators. These programs require certified applicators to continue to meet the competency requirements either through continuing education or examination.

V. Why is the agency taking this action?

Section 171.11(e) states that an EPA Federal certificate based on a certifying agency's certificate is valid for 2 years for commercial applicators and 3 years for private applicators, or until the expiration date of the original certifying agency certificate, whichever occurs first. The duration of the certification period varies significantly among States, with some currently being shorter and some longer than the Federal certificate maximum of 2 or 3 years. This proposed rule would eliminate the 2 or 3 year maximum for Federal certificates, and allow Federal certification to expire at the same time as the underlying certifying agency certificate. Therefore, applicators who obtain Federal certification using a State certificate that expires in the same time as the current Federal maximum, or shorter time, would not be affected by this proposed rule.

However, the proposed rule would eliminate potential drawbacks to applicators holding a Federal certificate when the underlying State certificate is valid for a longer time period than the maximum 2 or 3 years for the EPA Federal certificate. Under the current regulation, for an applicator certified in such a State to continue a Federal certification, prior to expiration of their Federal certificate they would need to complete a new application form and again provide written evidence of the valid state certification. Federal recertification in this situation becomes an unnecessary, additional paperwork burden for both EPA and the applicator with no additional benefits to human health or the environment since the applicator can reapply for a Federal certificate using the same underlying certificate with no new demonstration of competency.

A potential benefit to Federal recertification occurring more frequently than the State's, is that in checking the current validity of the applicant's underlying State certificate, EPA may discover that the issuing State has modified, suspended, or revoked the certificate, thereby giving EPA the opportunity to deny the recertification application or modify the new Federal certificate. However, EPA expects to learn of modifications, suspensions, or revocations of State certificates independent of the timing of Federal recertification. Given that EPA would make decisions on modifications, suspensions, or revocations of Federal certificates independent of recertification, Federal recertification at a different time from the State recertification would be of no benefit. Federal recertification at the same time as the State recertification, as proposed, would be beneficial in that it would be a recertification based on newly demonstrated competency. In addition, different expiration dates for the Federal certificate and the original certificate may cause unnecessary complication and confusion for applicators and EPA. The added confusion and paperwork lowers the probability of successful compliance by the regulated community.

VI. FIFRA Mandated Reviews

In accordance with FIFRA section 25(a) and (d), EPA submitted a draft of this proposed rule to the Committee on Agriculture in the House of Representatives, the Committee on Agriculture, Nutrition, and Forestry in the United States Senate, the Secretary of Agriculture, and the FIFRA Scientific Advisory Panel (SAP). The SAP and the Secretary of Agriculture waived review of this proposed rule.

VII. Statutory and Executive Order Reviews

This action proposes to allow EPA to use the same expiration date for the certification it grants, using the expiration date of the valid certification upon which the EPA certification is based. It does not otherwise propose to amend or impose any other requirements. The proposed rule will not otherwise involve any significant policy or legal issues, and will not increase existing costs. In fact, synchronizing the expiration dates can reduce burden because some applicators will have to complete less paperwork by having a reduced frequency of Federal recertification.

As such, the Office of Management and Budget (OMB) has determined that this is not a ''significant regulatory action'' under Executive Order 12866, entitled *Regulatory Planning and Review* (58 FR 51735, October 4, 1993). Nor does it impose any additional information collection burden that requires review by OMB under the provisions of the Paperwork Reduction Act of 1995 (44 U.S.C. 3501 *et seq.*). The information collection activities

contained in the regulations are already approved under OMB control number 2070–0029 (EPA ICR No. 0155.09) and the changes to the expiration date are not expected to change the covered activities. An agency may not conduct or sponsor, and a person is not required to respond to a collection of information unless it displays a currently valid OMB control number. The OMB control numbers for certain EPA regulations in 40 CFR, in addition to appearing in the **Federal Register**, are also listed in 40 CFR part 9.

Pursuant to section 605(b) of the Regulatory Flexibility Act (RFA) (5 U.S.C. 601 *et seq.*), the Agency hereby certifies that this proposed rule does not have a significant adverse economic impact on a substantial number of small entities. The proposed revision that would synchronize the certification expiration dates for restricted use applicators is not expected to have any adverse economic impacts on affected entities, regardless of their size. In general, EPA strives to minimize potential adverse impacts on small entities when developing regulations to achieve the environmental and human health protection goals of the statute and EPA. EPA solicits comments specifically about potential small business impacts.

State, local, and tribal governments are not regulated by or affected by this proposed rule, so it is not expected to affect these governments. Accordingly, pursuant to Title II of the Unfunded Mandates Reform Act (UMRA) (2 U.S.C. 1531–1538), EPA has determined that this action is not subject to the requirements in sections 202 and 205 of UMRA because it does not contain a Federal mandate that may result in expenditures of $100 million or more for State, local, and tribal governments, in the aggregate, or for the private sector in any 1 year. In addition, this action does not significantly or uniquely affect small governments or impose a significant intergovernmental mandate, as described in sections 203 and 204 of UMRA. For the same reasons, EPA has determined that this proposed rule does not have ''federalism implications'' as specified in Executive Order 13132, entitled *Federalism* (64 FR 43255, August 10, 1999), because it would not have substantial direct effects on the States, on the relationship between the national government and the States, or on the distribution of power and responsibilities among the various levels of government, as specified in the Order. Thus, Executive Order 13132 does not apply to this proposed rule. Nor does it have ''tribal implications'' as specified in Executive Order 13175, entitled *Consultation and Coordination with Indian Tribal Governments* (65 FR 22951, November 9, 2000). Thus, Executive Order 13175 does not apply to this action.

Since this action is not economically significant under Executive Order 12866, it is not subject to Executive Order 13045, entitled *Protection of Children from Environmental Health Risks and Safety Risks* (62 FR 19885, April 23, 1997), and Executive Order 13211, entitled *Actions Concerning Regulations that Significantly Affect Energy Supply, Distribution,* or *Use* (66 FR 28355, May 22, 2001). In addition, EPA interprets Executive Order 13045 as applying only to those regulatory actions that concern health or safety risks, which is not the case in this proposed rule.

This action does not involve technical standards that would require the consideration of voluntary consensus standards pursuant to section 12(d) of the National Technology Transfer and Advancement Act (NTTAA) (15 U.S.C. 272 note).

This action does not have an adverse impact on the environmental and health conditions in low-income and minority communities. Therefore, this action does not involve special consideration of environmental justice related issues as specified in Executive Order 12898, entitled *Federal Actions to Address Environmental Justice in Minority Populations and Low-Income Populations* (59 FR 7629, February 16, 1994).

List of Subjects in 40 CFR Part 171

Environmental protection, Indians—lands, Intergovernmental relations, Pesticides and pests, Reporting and recordkeeping requirements.

Dated: June 14, 2011.

Lisa P. Jackson,

Administrator.

Therefore, it is proposed that 40 CFR chapter I be amended as follows:

1. The authority citation for part 171 continues to read as follows:

Authority: 7 U.S.C. 136i and 136w.

2. Amend § 171.11 by revising paragraph (e) to read as follows:

§ 171.11 Federal certification of pesticide applicators in States or on Indian Reservations where there is no approved State or Tribal certification plan in effect.

* * * * *

(e) *Recognition of other certificates.* The Administrator may issue a certificate to an individual possessing any other valid Federal, State, or Tribal certificate without further demonstration of competency. The individual shall submit the EPA certification form and written evidence of valid certification to the appropriate EPA Regional Office. The Administrator may deny issuance of such certificate if the standards of competency for each category or subcategory identified in the other Federal, State, or Tribal certificate are not sufficiently comparable to justify waiving further demonstration of competency. The Administrator may revoke, suspend, or modify such certificate if the Federal, State, or Tribal certificate upon which it is based is revoked, suspended, or modified. Unless suspended or revoked, a certificate issued under this paragraph is valid until the expiration date of the Federal, State, or Tribal certificate.

* * * * *

[FR Doc. 2011–15883 Filed 6–23–11; 8:45 am]

BILLING CODE 6560–50–P

ENVIRONMENTAL PROTECTION AGENCY

40 CFR Part 271

[EPA–R06–RCRA–2010–0307; FRL–9323–8]

Louisiana; Final Authorization of State Hazardous Waste Management Program Revisions

AGENCY: Environmental Protection Agency (EPA).

ACTION: Proposed rule.

SUMMARY: The State of Louisiana has applied to EPA for Final authorization of the changes to its hazardous waste program under the Resource Conservation and Recovery Act (RCRA). EPA proposes to grant Final authorization to the State of Louisiana. In the ''Rules and Regulations'' section of this **Federal Register**, EPA is authorizing the changes by an immediate final rule. EPA did not make a proposal prior to the immediate final rule because we believe this action is not controversial and do not expect comments that oppose it. We have explained the reasons for this authorization in the preamble to the immediate final rule. Unless we get written comments which oppose this authorization during the comment period, the immediate final rule will become effective on the date it establishes, and we will not take further action on this proposal. If we receive comments that oppose this action, we will withdraw the immediate final rule and it will not take effect. We will then respond to public comments in a later final rule based on this proposal. You may not have another opportunity for

comment. If you want to comment on this action, you must do so at this time.

DATES: Send your written comments by July 25, 2011.

ADDRESSES: Send written comments to Alima Patterson, Region 6, Regional Authorization Coordinator, (6PD–O), Multimedia Planning and Permitting Division, at the address shown below. You can examine copies of the materials submitted by the State of Louisiana during normal business hours at the following locations: EPA Region 6, 1445 Ross Avenue, Dallas, Texas 75202–2733, phone number (214) 665–6444; or Louisiana Department of Environmental Quality, 602 N. Fifth Street, Baton Rouge, Louisiana 70884–2178, phone number (225) 219–3559. Comments may also be submitted electronically or through hand delivery/courier; please follow the detailed instructions in the **ADDRESSES** section of the immediate final rule which is located in the Rules section of this **Federal Register**.

FOR FURTHER INFORMATION CONTACT: Alima Patterson (214) 665–8533.

SUPPLEMENTARY INFORMATION:

For additional information, please see the immediate final rule published in the ''Rules and Regulations'' section of this **Federal Register**.

Dated: June 8, 2011.

Al Armendariz,

Regional Administrator, Region 6.

[FR Doc. 2011–15881 Filed 6–23–11; 8:45 am]

BILLING CODE 6560–50–P

FEDERAL COMMUNICATIONS COMMISSION

47 CFR Parts 1, 2, 22, 24, 27, 90 and 95

[WT Docket No. 10–4; DA 11–1078]

Improving Wireless Coverage Through the Use of Signal Boosters

AGENCY: Federal Communications Commission.

ACTION: Proposed rule; extension of comment period.

SUMMARY: The Federal Communications Commission extends the deadlines for filing comments and reply comments on the Commission's *Notice of Proposed Rulemaking* (*NPRM*), in this proceeding, which was published in the **Federal Register** on Tuesday, May 10, 2011.

DATES: The comment period for the proposed rule published May 10, 2011 (76 FR 26983), is extended. Submit comments on or before July 25, 2011, and reply comments on or before August 24, 2011.

ADDRESSES: You may submit comments, identified by WT Docket No. 10–4; FCC 11–53, by any of the following methods:

- *Federal eRulemaking Portal: http://www.regulations.gov.* Follow the instructions for submitting comments.
- *Federal Communications Commission's Web Site: http://www.fcc.gov/cgb/ecfs/.* Follow the instructions for submitting comments.
- *People with Disabilities:* Contact the FCC to request reasonable accommodations (accessible format documents, sign language interpreters, CART, *etc.*) by *e-mail: FCC504@fcc.gov* or phone 202–418–0530 or TTY: 202–418–0432.

For detailed instructions for submitting comments and additional information on the rulemaking process, see the **SUPPLEMENTARY INFORMATION** section of this document.

FOR FURTHER INFORMATION CONTACT: Joyce Jones, Mobility Division, Wireless Telecommunications Bureau, at (202) 418–1327, or e-mail at *joyce.jones@fcc.gov.*

SUPPLEMENTARY INFORMATION: This is a summary of the Commission's *Order* (''*Order*'') in WT Docket No. 10–4, DA 11–1078, adopted and released on June 20, 2011, which extends the comment and reply comment filing deadlines established in the *NPRM* published under FCC No. 11–53 at 76 FR 26983, May 10, 2011. The full text of this document is available for inspection and copying during normal business hours in the FCC Reference Center, 445 12th Street, SW., Washington, DC 20554. The complete text may be purchased from the Commission's copy contractor, Best Copy and Printing, Inc., 445 12th Street, SW., Room CY–B402, Washington, DC 20554. The full text may also be downloaded at: *http://www.fcc.gov.* Alternative formats are available to persons with disabilities by sending an e-mail to *fcc504@fcc.gov* or by calling the Consumer & Governmental Affairs Bureau at 202–418–0530 (voice), 202–418–0432 (tty).

SUPPLEMENTARY INFORMATION:

Background

1. In this document, the Commission addresses a joint motion filed by Wilson Electronics, Inc. and Verizon Wireless (filed June 16, 2011) requesting a thirty-day extension of the time period to file comments in this rulemaking to allow them additional time to ''work through the many complicated technical issues presented'' and ''work towards a solution that has the potential to benefit both booster manufacturers and wireless carriers.'' The Commission, in this instance, finds that providing a limited extension will serve the public interest by allowing parties to discuss the complex technical issues at stake and develop consensus approaches that benefit consumers, and is therefore extending the deadline for all comments and reply comments to July 25, and August 24, 2011, respectively.

Ordering Clauses

2. Pursuant to section 4(i) of the Communications Act of 1934, as amended, 47 U.S.C. 154(i), and section 1.46 of the Commission's rules, 47 CFR 1.46, the joint request of Wilson Electronics, Inc. and Verizon Wireless, filed on June 16, 2011, is *Granted* and the deadline for filing comments in response to the *NPRM* is *Extended* to July 25, 2011, and the deadline for filing reply comments is *Extended* to August 24, 2011.

3. This action is taken under delegated authority pursuant to sections 0.131 and 0.331 of the Commission's rules, 47 CFR 0.131, 0.331.

4. A copy of the *NPRM,* including the Initial Regulatory Flexibility Analysis, *Has Been Sent* to the Chief Counsel of Advocacy of the Small Business Administration.

Federal Communications Commission.

Michael McKenzie,

Deputy Chief, Wireless Telecommunications Bureau.

[FR Doc. 2011–15895 Filed 6–23–11; 8:45 am]

BILLING CODE 6712–01–P

FEDERAL COMMUNICATIONS COMMISSION

47 CFR Part 73

[DA 11–867; MB Docket No. 11–87; RM–11628]

Radio Broadcasting Services; Bastrop, LA

AGENCY: Federal Communications Commission.

ACTION: Proposed rule.

SUMMARY: This document requests comments on a petition for rulemaking filed by Kenneth W. Diebel, licensee of FM Station KGGM, Channel 228A, Delhi, Louisiana, proposing the substitution of FM Channel 228A for vacant FM Channel 230A at Bastrop, Louisiana. The proposed substitution of Channel 228A at Bastrop accommodates the hybrid application, which requests the substitution of Channel 230C3 for Channel 228A at Delphi, Louisiana. *See* File No. BNPH–20110214ADS. A staff engineering analysis indicates that Channel 228A can be allotted to Bastrop consistent with the minimum distance

separation requirements of the Rules, with a site restriction 5.3 kilometers (3.3 miles) northeast of the community. The reference coordinates are 32–48–20 NL and 91–52–05 WL. *See* Supplementary Information, *supra.*

DATES: Comments must be filed on or before July 5, 2011, and reply comments on or before July 20, 2011.

ADDRESSES: Secretary, Federal Communications Commission, 445 Twelfth Street, SW., Washington, DC 20554. In addition to filing comments with the FCC, interested parties should serve the petitioner as follows: Kenneth W. Diebel, 414 Ineichen Street, Rayville, Louisiana 71269.

FOR FURTHER INFORMATION CONTACT: Deborah A. Dupont, Media Bureau, (202) 418–7072.

SUPPLEMENTARY INFORMATION: This is a synopsis of the Commission's Notice of Proposed Rule Making, MB Docket No.11–87, adopted May 11, 2011, and released May 13, 2011. The full text of this Commission decision is available for inspection and copying during normal business hours in the FCC's Reference Information Center at Portals II, CY–A257, 445 Twelfth Street, SW., Washington, DC 20554. This document may also be purchased from the Commission's duplicating contractors, Best Copy and Printing, Inc., 445 12th Street, SW., Room CY–B402, Washington, DC 20554, telephone 1–800–378–3160 or via e-mail *http://www.BCPIWEB.com.* This document does not contain proposed information collection requirements subject to the Paperwork Reduction Act of 1995, Public Law 104–13. In addition, therefore, it does not contain any proposed information collection burden ''for small business concerns with fewer than 25 employees,'' pursuant to the Small Business Paperwork Relief Act of 2002, Public Law 107–198, *see* 44 U.S.C. 3506(c)(4).

Channel 230A is not listed in the FM Table of Allotments. We note that vacant Channel 230A at Bastrop was inadvertently removed from the FM Table of Allotments in MB Docket 05–210. *See* 71 FR 76208, published December 20, 2006. Channel 230A was originally added to the FM Table of Allotments in MM Docket No. 99–141. *See* 66 FR 18734, published April 11, 2001. In this regard, Channel 230A is a vacant allotment due to the cancellation of the Station KTRY–FM license. *See* BLH–6141. The cancellation of the Station KTRY–FM license is under reconsideration.

Provisions of the Regulatory Flexibility Act of l980 do not apply to this proceeding.

Members of the public should note that from the time a Notice of Proposed Rule Making is issued until the matter is no longer subject to Commission consideration or court review, all *ex parte* contacts are prohibited in Commission proceedings, such as this one, which involve channel allotments. See 47 CFR 1.1204(b) for rules governing permissible *ex parte* contacts.

For information regarding proper filing procedures for comments, see 47 CFR 1.415 and 1.420.

List of Subjects in 47 CFR Part 73

Radio, Radio broadcasting.

Federal Communications Commission.

Nazifa Sawez,

Assistant Chief, Audio Division, Media Bureau.

For the reasons discussed in the preamble, the Federal Communications Commission proposes to amend 47 CFR Part 73 as follows:

Part 73—Radio Broadcast Services

1. The authority citation for part 73 continues to read as follows:

Authority: 47 U.S.C. 154, 303, 334, 336 and 339.

§ 73.202 [Amended]

2. Section 73.202(b), the Table of FM Allotments under Louisiana, is amended by adding Bastrop, Channel 228A.

[FR Doc. 2011–15897 Filed 6–23–11; 8:45 am]

BILLING CODE 6712–01–P

DEPARTMENT OF COMMERCE

National Oceanic and Atmospheric Administration

50 CFR Part 223

RIN 0648–XA465

Intent To Prepare an Environmental Impact Statement for Sea Turtle Conservation and Recovery Actions and To Conduct Public Scoping Meetings

AGENCY: National Marine Fisheries Service (NMFS), National Oceanic and Atmospheric Administration (NOAA), Department of Commerce.

ACTION: Intent to prepare an environmental impact statement and conduct public scoping meetings.

SUMMARY: NMFS intends to prepare an environmental impact statement (EIS) and to conduct public scoping meetings to comply with the National Environmental Policy Act (NEPA) by assessing potential impacts resulting from the proposed implementation of new sea turtle regulatory requirements in the shrimp fishery of the southeastern United States. These requirements are proposed to protect threatened and endangered sea turtles in the western Atlantic Ocean and Gulf of Mexico from incidental capture, and would be implemented under the Endangered Species Act (ESA).

DATES: The public scoping period starts June 24, 2011 and will continue until August 23, 2011. NMFS will consider all written comments received or postmarked by August 8, 2011, in defining the scope of the EIS. Comments received or postmarked after that date will be considered to the extent practicable. Verbal comments will be accepted at the NMFS scoping meetings as specified below.

ADDRESSES: NMFS will hold five public scoping meetings to provide the public with an opportunity to present verbal comments on the scope of the EIS and to learn more about the proposed action from NMFS officials. The locations and times for the scoping meetings are listed in the **SUPPLEMENTARY INFORMATION** section of this document.

In addition to the five scoping meetings, NMFS will also submit a scoping document to the Gulf of Mexico and South Atlantic Fishery Management Councils, and the Atlantic and Gulf States Marine Fisheries Commissions.

Written comments on the scope of the EIS should be sent electronically via e-mail to *Michael.Barnette@noaa.gov,* or physically via U.S. mail to Michael Barnette, Southeast Regional Office, Protected Resources Division, 263 13th Ave., South, St. Petersburg, FL 33701–5505. Additional information, including a scoping document, can be found at: *http://www.nmfs.noaa.gov/pr/species/turtles/regulations.htm.* All comments, whether offered verbally in person at the scoping meetings or in writing as described above, will be considered.

FOR FURTHER INFORMATION CONTACT: Michael Barnette, NMFS, Southeast Regional Office, at the address above, or at (727) 824–5312.

SUPPLEMENTARY INFORMATION:

Background

All sea turtles that occur in U.S. waters are listed as either endangered or threatened under the ESA. The Kemp's ridley (*Lepidochelys kempii*), leatherback (*Dermochelys coriacea*), and hawksbill (*Eretmochelys imbricata*) are listed as endangered. Loggerhead

(*Caretta caretta*) and green (*Chelonia mydas*) turtles are listed as threatened, except for breeding populations of green turtles in Florida and on the Pacific coast of Mexico, which are listed as endangered.

Sea turtles are incidentally taken, and some are killed, as a result of numerous activities, including fishery-related trawling activities in the Gulf of Mexico and along the Atlantic seaboard. Under the ESA and its implementing regulations, the taking of sea turtles is prohibited, with exceptions identified in 50 CFR 223.206(d), or according to the terms and conditions of a biological opinion issued under section 7 of the ESA, or according to an incidental take permit issued under section 10 of the ESA. The incidental taking of turtles during shrimp trawling is exempted from the taking prohibition of section 9 of the ESA if the conservation measures specified in the sea turtle conservation regulations (50 CFR 223.205) are followed. The regulations require most vessels defined as ''shrimp trawlers'' (50 CFR 222.102) operating in the southeastern United States (Atlantic or Gulf area, see 50 CFR 223.206) to have a NMFS-approved turtle excluder device (TED) installed in each net that is rigged for fishing to allow sea turtles to escape. TEDs incorporate an escape opening, usually covered by a webbing flap, which allows sea turtles to escape from trawl nets. TEDs currently approved by NMFS include single-grid hard TEDs and hooped hard TEDs conforming to a generic description, and one type of soft TED—the Parker soft TED (see 50 CFR 223.207). Most approved hard TEDs are described in the regulations (50 CFR 223.207(a)) according to generic criteria based upon certain parameters of TED design, configuration, and installation, including height and width dimensions of the TED opening through which the turtles escape. The regulations also describe additional hard TEDs' specific requirements. Skimmer trawls, pusher-head trawls, and wing nets (butterfly trawls), however, may employ alternative tow time restrictions in lieu of TEDs, pursuant to 50 CFR 223.206(d)(2)(ii)(A). The alternative tow time restrictions limit tow times to 55 minutes from April 1 through October 31, and 75 minutes from November 1 through March 31.

To be approved by NMFS, a TED design must be shown to be 97 percent effective in excluding sea turtles during testing based upon NMFS-approved scientific testing protocols (50 CFR 223.207(e)(1)). NMFS-approved testing protocols established to date include the ''small turtle test'' (55 FR 41092, October 9, 1990) and the ''wild turtle test'' (52 FR 24244, June 29, 1987). Additionally, NMFS has established a leatherback model testing protocol to evaluate a candidate TED's ability to exclude adult leatherback sea turtles (66 FR 24287, May 14, 2001). Because testing with live leatherbacks is impossible, NMFS obtained the carapace measurements of 15 nesting female leatherback turtles and used these data to construct an aluminum pipe-frame model of a leatherback turtle measuring 40 inches (101.6 cm) in width, 60 inches (152.4 cm) in length, and 21 inches (53.3 cm) in height. If the leatherback model and a diver with full scuba gear are able to pass through the escape opening of a candidate TED, that escape opening is judged to be capable of excluding adult leatherback sea turtles, as well as other large adult sea turtles.

Purpose of This Action

The National Environmental Policy Act (NEPA) requires Federal agencies to conduct an environmental analysis of their proposed actions to determine if the actions may significantly affect the quality of the human environment. NMFS is considering a variety of regulatory measures to reduce the bycatch of threatened and endangered sea turtles in the shrimp fishery of the southeastern United States in light of new concerns regarding the effectiveness of existing TED regulations in protecting sea turtles. This EIS will provide background information and specifically evaluate the alternatives and impacts associated with any considered management alternative. This rulemaking would be implemented pursuant to the ESA. NMFS is seeking public input on the scope of the required NEPA analysis, including the range of reasonable alternatives, associated significant impacts of any alternatives, and suitable mitigation measures.

Scope of the Action

The draft EIS is expected to identify and evaluate the relevant significant impacts and issues associated with implementing new sea turtle regulations for the shrimp fishery of the southeastern United States, in accordance with the Council on Environmental Quality's Regulations at 40 CFR parts 1500–1508 and NOAA's procedures for implementing NEPA found in NOAA Administrative Order (NAO) 216–6, dated May 20, 1999.

Alternatives

NMFS will evaluate a range of reasonable alternatives in the draft EIS to reduce sea turtle bycatch and mortality in the shrimp fishery of the southeastern United States. In addition to evaluating the status quo, NMFS will evaluate several other alternatives. These alternatives include but are not necessarily limited to: Requiring all skimmer trawls, pusher-head trawls, and wing nets (butterfly trawls) in both the Atlantic and Gulf areas to use TEDs; requiring all skimmer trawls, pusher-head trawls, and wing nets (butterfly trawls) in just the Gulf area to use TEDs; and time and area closures affecting all shrimp vessels. Potential new TED requirements would apply to vessels fishing in both state and Federal waters.

Public Comments

NMFS provides this notice to advise the public and other agencies of NMFS's intentions and to obtain suggestions and information on the scope of the significant issues to include in the EIS. Comments and suggestions are invited from all interested parties to ensure that the full range of issues related to this proposed action and all substantive issues are identified. NMFS requests that comments be as specific as possible. In particular, the agency requests information regarding the potential direct, indirect, and cumulative impacts on the human environment from the proposed action. The human environment is defined as ''* * * the natural and physical environment and the relationship of people with that environment'' (40 CFR 1508.14). In the context of the EIS, the human environment could include air quality, water quality, underwater noise levels, socioeconomic resources, fisheries, and environmental justice.

Comments concerning this environmental review process should be directed to NMFS (see **ADDRESSES**). All comments and material received, including names and addresses, will become part of the administrative record and may be released to the public.

Authority

The environmental review of the proposed action will be conducted under the authority and in accordance with the requirements of the National Environmental Policy Act of 1969, as amended (42 U.S.C. 4321 *et seq.*), National Environmental Policy Act Regulations (40 CFR parts 1500–1508), NOAA Administrative Order 216–6, other appropriate Federal laws and regulations, and policies and procedures of NOAA and NMFS for compliance with those regulations.

Locations and Times of Scoping Meetings

Scoping meetings will be held at the following locations:

1. Gray—Terrebonne Parish Public Library, North Terrebonne Branch, 4130 West Park Avenue, Gray, LA 70359.
2. Belle Chasse—Belle Chasse Community Center, 8398 Highway 23, Belle Chasse, LA 70037.
3. Biloxi—Mississippi Department of Marine Resources, 1141 Bayview Avenue, Biloxi, MS 39530.
4. Bayou La Batre—Bayou La Batre Community Center, 12745 Padgett Switch Road, Bayou La Batre, AL 36509.
5. Morehead City—Crystal Coast Civic Center, 3505 Arendell Street, Morehead City, NC 28557.

The meeting dates are:

1. July 12, 2011, 12 p.m. to 2 p.m., Gray, LA.
2. July 12, 2011, 6 p.m. to 8 p.m., Belle Chasse, LA.
3. July 13, 2011, 4 p.m. to 6 p.m., Biloxi, MS.
4. July 14, 2011, 12 p.m. to 2 p.m., Bayou La Batre, AL.
5. July 18, 2011, 2 p.m. to 4 p.m., Morehead City, NC.

Scoping Meetings Code of Conduct

The public is asked to follow the following code of conduct at the scoping meetings. At the beginning of each meeting, a representative of NMFS will explain the ground rules (*e.g.,* alcohol is prohibited from the meeting room; attendees will be called to give their comments in the order in which they registered to speak; each attendee will have an equal amount of time to speak; and attendees may not interrupt one another). The NMFS representative will structure the meeting so that all attending members of the public will be able to comment, if they so choose, regardless of the controversial nature of the subject(s). Attendees are expected to respect the ground rules, and those that do not will be asked to leave the meeting.

Special Accommodations

The scoping meetings are physically accessible to people with disabilities. Requests for sign language interpretation or other auxiliary aids should be directed to the NOAA contact (see **FOR FURTHER INFORMATION CONTACT**) at least 7 days prior to the meeting.

Dated: June 20, 2011.

James H. Lecky,

Director, Office of Protected Resources, National Marine Fisheries Service.

[FR Doc. 2011–15898 Filed 6–23–11; 8:45 am]

BILLING CODE 3510–22–P

Notices

Federal Register
Vol. 76, No. 122
Friday, June 24, 2011

This section of the FEDERAL REGISTER contains documents other than rules or proposed rules that are applicable to the public. Notices of hearings and investigations, committee meetings, agency decisions and rulings, delegations of authority, filing of petitions and applications and agency statements of organization and functions are examples of documents appearing in this section.

DEPARTMENT OF AGRICULTURE

Animal and Plant Health Inspection Service

[Docket No. APHIS–2011–0052]

Notice of Request for Extension of Approval of an Information Collection; Importation of Tomatoes From Souss-Massa-Draa, Morocco

AGENCY: Animal and Plant Health Inspection Service, USDA.

ACTION: Extension of approval of an information collection; comment request.

SUMMARY: In accordance with the Paperwork Reduction Act of 1995, this notice announces the Animal and Plant Health Inspection Service's intention to request an extension of approval of an information collection associated with regulations for the importation of tomatoes from Souss-Massa-Draa, Morocco.

DATES: We will consider all comments that we receive on or before August 23, 2011.

ADDRESSES: You may submit comments by either of the following methods:

- *Federal eRulemaking Portal:* Go to *http://www.regulations.gov/#!documentDetail;D=APHIS-2011-0052-0001*.
- *Postal Mail/Commercial Delivery:* Send your comment to Docket No. APHIS–2011–0052, Regulatory Analysis and Development, PPD, APHIS, Station 3A–03.8, 4700 River Road, Unit 118, Riverdale, MD 20737–1238.

Supporting documents and any comments we receive on this docket may be viewed at *http://www.regulations.gov/#!docketDetail;D=APHIS-2011-0052* or in our reading room, which is located in room 1141 of the USDA South Building, 14th Street and Independence Avenue SW., Washington, DC. Normal reading room hours are 8 a.m. to 4:30 p.m., Monday through Friday, except holidays. To be sure someone is there to help you, please call (202) 690–2817 before coming.

FOR FURTHER INFORMATION CONTACT: For information on regulations for the importation of tomatoes from Souss-Massa-Draa, Morocco, contact Mr. Mike Swett, Trade Director, PPQ, APHIS, 4700 River Road Unit 140, Riverdale, MD 20737–1236; (301) 734–5300. For copies of more detailed information on the information collection, contact Mrs. Celeste Sickles, APHIS' Information Collection Coordinator, at (301) 851–2908.

SUPPLEMENTARY INFORMATION:

Title: Importation of Tomatoes From Souss-Massa-Draa, Morocco.

OMB Number: 0579–0345.

Type of Request: Extension of an approval of an information collection.

Abstract: The Plant Protection Act (PPA, 7 U.S.C. 7701 *et seq.*) authorizes the Secretary of Agriculture to restrict the importation, entry, or interstate movement of plants, plant products, and other articles to prevent the introduction of plant pests into the United States or their dissemination within the United States. Regulations authorized by the PPA concerning the importation of fruits and vegetables into the United States from certain parts of the world are contained in ''Subpart—Fruits and Vegetables'' (7 CFR 319.56–1 through 319.56–50).

Under these regulations, tomatoes from Souss-Massa-Draa, Morocco are subject to certain conditions before entering the United States to ensure that exotic plant pests are not introduced into the United States. The regulations require the use of information collection activities including a Mediterranean fruit fly management program, fruit fly trapping and control activities, recordkeeping, labeling for identification of production site, and a phytosanitary certificate with an additional declaration stating that the tomatoes were produced in accordance with the regulations.

We are asking the Office of Management and Budget (OMB) to approve our use of these information collection activities for an additional 3 years.

The purpose of this notice is to solicit comments from the public (as well as affected agencies) concerning our information collection. These comments will help us:

(1) Evaluate whether the collection of information is necessary for the proper performance of the functions of the Agency, including whether the information will have practical utility;

(2) Evaluate the accuracy of our estimate of the burden of the collection of information, including the validity of the methodology and assumptions used;

(3) Enhance the quality, utility, and clarity of the information to be collected; and

(4) Minimize the burden of the collection of information on those who are to respond, through use, as appropriate, of automated, electronic, mechanical, and other collection technologies; *e.g.,* permitting electronic submission of responses.

Estimate of burden: The public reporting burden for this collection of information is estimated to average 0.7032 hours per response.

Respondents: Foreign officials, exporters, importers, and growers of tomatoes.

Estimated annual number of respondents: 10.

Estimated annual number of responses per respondent: 55.6.

Estimated annual number of responses: 556.

Estimated total annual burden on respondents: 391 hours. (Due to averaging, the total annual burden hours may not equal the product of the annual number of responses multiplied by the reporting burden per response.)

All responses to this notice will be summarized and included in the request for OMB approval. All comments will also become a matter of public record.

Done in Washington, DC, this 20th day of June 2011.

Kevin Shea,

Acting Administrator, Animal and Plant Health Inspection Service.

[FR Doc. 2011–15862 Filed 6–23–11; 8:45 am]

BILLING CODE 3410–34–P

DEPARTMENT OF AGRICULTURE

Animal and Plant Health Inspection Service

[Docket No. APHIS–2011–0053]

Notice of Request for Extension of Approval of an Information Collection; Importation of Longan From Taiwan

AGENCY: Animal and Plant Health Inspection Service, USDA.

ACTION: Extension of approval of an information collection; comment request.

SUMMARY: In accordance with the Paperwork Reduction Act of 1995, this notice announces the Animal and Plant Health Inspection Service's intention to request an extension of approval of an information collection associated with regulations for the importation of longan from Taiwan.

DATES: We will consider all comments that we receive on or before August 23, 2011.

ADDRESSES: You may submit comments by either of the following methods:

- *Federal eRulemaking Portal:* Go to *http://www.regulations.gov/#!documentDetail;D=APHIS-2011-0053-0001*.
- *Postal Mail/Commercial Delivery:* Send your comment to Docket No. APHIS–2011–0053, Regulatory Analysis and Development, PPD, APHIS, Station 3A–03.8, 4700 River Road Unit 118, Riverdale, MD 20737–1238.

Supporting documents and any comments we receive on this docket may be viewed at *http://www.regulations.gov/#!docketDetail;D=APHIS-2011-0053* or in our reading room, which is located in room 1141 of the USDA South Building, 14th Street and Independence Avenue, SW., Washington, DC. Normal reading room hours are 8 a.m. to 4:30 p.m., Monday through Friday, except holidays. To be sure someone is there to help you, please call (202) 690–2817 before coming.

FOR FURTHER INFORMATION CONTACT: For information on regulations for the importation of longan from Taiwan, contact Mr. Alex Belano, Senior Import Specialist, Regulator Coordination and Compliance, PPQ, APHIS, 4700 River Road Unit 133, Riverdale, MD 20737; (301) 734–0627. For copies of more detailed information on the information collection, contact Mrs. Celeste Sickles, APHIS' Information Collection Coordinator, at (301) 851–2908.

SUPPLEMENTARY INFORMATION:

Title: Importation of Longan From Taiwan.

OMB Number: 0579–0351.

Type of Request: Extension of an approval of an information collection.

Abstract: The Plant Protection Act (PPA, 7 U.S.C. 7701 *et seq.*) authorizes the Secretary of Agriculture to restrict the importation, entry, or interstate movement of plants, plant products, and other articles to prevent the introduction of plant pests into the United States or their dissemination within the United States. Regulations authorized by the PPA concerning the importation of fruits and vegetables into the United States from certain parts of the world are contained in ''Subpart—Fruits and Vegetables'' (7 CFR 319.56–1 through 319.56–50).

Under these regulations, longan from Taiwan are subject to certain conditions before entering the United States to ensure that exotic plant pests are not introduced into the United States. The regulations require the use of cold treatment and special port-of-arrival inspection procedures for certain quarantine pests. In addition, the fruit must be accompanied by a phytosanitary certificate stating that the fruit was inspected and found to be free of certain pests, and the individual cartons or boxes in which the longan are shipped must be stamped or printed with a statement prohibiting their importation into or distribution within the State of Florida.

We are asking the Office of Management and Budget (OMB) to approve our use of these information collection activities for an additional 3 years.

The purpose of this notice is to solicit comments from the public (as well as affected agencies) concerning our information collection. These comments will help us:

(1) Evaluate whether the collection of information is necessary for the proper performance of the functions of the Agency, including whether the information will have practical utility;

(2) Evaluate the accuracy of our estimate of the burden of the collection of information, including the validity of the methodology and assumptions used;

(3) Enhance the quality, utility, and clarity of the information to be collected; and

(4) Minimize the burden of the collection of information on those who are to respond, through use, as appropriate, of automated, electronic, mechanical, and other collection technologies; e.g., permitting electronic submission of responses.

Estimate of burden: The public reporting burden for this collection of information is estimated to average 0.0018 hours per response.

Respondents: National plant protection organization of Taiwan, importers of longan.

Estimated annual number of respondents: 12,004.

Estimated annual number of responses per respondent: 1.0012.

Estimated annual number of responses: 12,018.

Estimated total annual burden on respondents: 22 hours. (Due to averaging, the total annual burden hours may not equal the product of the annual number of responses multiplied by the reporting burden per response.)

All responses to this notice will be summarized and included in the request for OMB approval. All comments will also become a matter of public record.

Done in Washington, DC, this 20th day of June 2011.

Kevin Shea,

Acting Administrator, Animal and Plant Health Inspection Service.

[FR Doc. 2011–15863 Filed 6–23–11; 8:45 am]

BILLING CODE 3410–34–P

DEPARTMENT OF AGRICULTURE

Animal and Plant Health Inspection Service

[Docket No. APHIS–2011–0054]

Notice of Request for Extension of Approval of an Information Collection; Importation of Eggplant From Israel

AGENCY: Animal and Plant Health Inspection Service, USDA.

ACTION: Extension of approval of an information collection; comment request.

SUMMARY: In accordance with the Paperwork Reduction Act of 1995, this notice announces the Animal and Plant Health Inspection Service's intention to request an extension of approval of an information collection associated with regulations for the importation of eggplant from Israel.

DATES: We will consider all comments that we receive on or before August 23, 2011.

ADDRESSES: You may submit comments by either of the following methods:

- *Federal eRulemaking Portal:* Go to *http://www.regulations.gov/#!documentDetail;D=APHIS-2011-0054-0001*.
- *Postal Mail/Commercial Delivery:* Send your comment to Docket No. APHIS–2011–0054, Regulatory Analysis and Development, PPD, APHIS, Station 3A–03.8, 4700 River Road Unit 118, Riverdale, MD 20737–1238.

Supporting documents and any comments we receive on this docket

may be viewed at *http://www.regulations.gov/#!docketDetail;D=APHIS-2011-0054* or in our reading room, which is located in room 1141 of the USDA South Building, 14th Street and Independence Avenue, SW., Washington, DC. Normal reading room hours are 8 a.m. to 4:30 p.m., Monday through Friday, except holidays. To be sure someone is there to help you, please call (202) 690–2817 before coming.

FOR FURTHER INFORMATION CONTACT: For information on regulations for the importation of eggplant from Israel, contact Ms. Donna West, Senior Import Specialist, PPQ, APHIS, 4700 River Road Unit 39, Riverdale, MD 20737–1231; (301) 734–0627. For copies of more detailed information on the information collection, contact Mrs. Celeste Sickles, APHIS' Information Collection Coordinator, at (301) 851–2908.

SUPPLEMENTARY INFORMATION:

Title: Importation of Eggplant From Israel.

OMB Number: 0579–0350.

Type of Request: Extension of an approval of an information collection.

Abstract: The Plant Protection Act (PPA, 7 U.S.C. 7701 *et seq.*) authorizes the Secretary of Agriculture to restrict the importation, entry, or interstate movement of plants, plant products, and other articles to prevent the introduction of plant pests into the United States or their dissemination within the United States. Regulations authorized by the PPA concerning the importation of fruits and vegetables into the United States from certain parts of the world are contained in ''Subpart—Fruits and Vegetables'' (7 CFR 319.56–1 through 319.56–50).

Under these regulations, eggplant from Israel are subject to certain conditions before entering the United States to ensure that exotic plant pests are not introduced into the United States. The regulations require the eggplant be grown under a systems approach that would include requirements for pest exclusion at the production site, fruit fly trapping inside and outside the production site, and pest-excluding packinghouse procedures. The eggplant must be accompanied by a phytosanitary certificate issued by the Israeli national plant protection organization with an additional declaration confirming that the eggplant had been produced in accordance with the regulations.

We are asking the Office of Management and Budget (OMB) to approve our use of these information collection activities for an additional 3 years.

The purpose of this notice is to solicit comments from the public (as well as affected agencies) concerning our information collection. These comments will help us:

(1) Evaluate whether the collection of information is necessary for the proper performance of the functions of the Agency, including whether the information will have practical utility;

(2) Evaluate the accuracy of our estimate of the burden of the collection of information, including the validity of the methodology and assumptions used;

(3) Enhance the quality, utility, and clarity of the information to be collected; and

(4) Minimize the burden of the collection of information on those who are to respond, through use, as appropriate, of automated, electronic, mechanical, and other collection technologies; *e.g.,* permitting electronic submission of responses.

Estimate of burden: The public reporting burden for this collection of information is estimated to average 1 hour per response.

Respondents: National plant protection organization of Israel, importers of eggplant.

Estimated annual number of respondents: 3.

Estimated annual number of responses per respondent: 1.333.

Estimated annual number of responses: 4.

Estimated total annual burden on respondents: 4 hours. (Due to averaging, the total annual burden hours may not equal the product of the annual number of responses multiplied by the reporting burden per response.)

All responses to this notice will be summarized and included in the request for OMB approval. All comments will also become a matter of public record.

Done in Washington, DC, this 20th day of June 2011.

Kevin Shea,

Acting Administrator, Animal and Plant Health Inspection Service.

[FR Doc. 2011–15865 Filed 6–23–11; 8:45 am]

BILLING CODE 3410–34–P

DEPARTMENT OF AGRICULTURE

Animal and Plant Health Inspection Service

[Docket No. APHIS–2011–0055]

Notice of Request for Extension of Approval of an Information Collection; Importation of Baby Squash and Baby Courgettes From Zambia

AGENCY: Animal and Plant Health Inspection Service, USDA.

ACTION: Extension of approval of an information collection; comment request.

SUMMARY: In accordance with the Paperwork Reduction Act of 1995, this notice announces the Animal and Plant Health Inspection Service's intention to request an extension of approval of an information collection associated with regulations for the importation of baby squash and baby courgettes from Zambia.

DATES: We will consider all comments that we receive on or before August 23, 2011.

ADDRESSES: You may submit comments by either of the following methods:

- *Federal eRulemaking Portal:* Go to *http://www.regulations.gov/#!documentDetail;D=APHIS-2011-0055-0001.*
- *Postal Mail/Commercial Delivery:* Send your comment to Docket No. APHIS–2011–0055, Regulatory Analysis and Development, PPD, APHIS, Station 3A–03.8, 4700 River Road Unit 118, Riverdale, MD 20737–1238.

Supporting documents and any comments we receive on this docket may be viewed at *http://www.regulations.gov/#!docketDetail;D=APHIS-2011-0055* or in our reading room, which is located in room 1141 of the USDA South Building, 14th Street and Independence Avenue, SW., Washington, DC. Normal reading room hours are 8 a.m. to 4:30 p.m., Monday through Friday, except holidays. To be sure someone is there to help you, please call (202) 690–2817 before coming.

FOR FURTHER INFORMATION CONTACT: For information on regulations for the importation of baby squash and baby courgettes from Zambia, contact Ms. Karen Bedigian, Senior Export Specialist, Phytosanitary Issues Management, PPQ, APHIS, 4700 River Road Unit 133, Riverdale, MD 20737–1236; (301) 734–5712. For copies of more detailed information on the information collection, contact Mrs. Celeste Sickles, APHIS' Information Collection Coordinator, at (301) 851–2908.

SUPPLEMENTARY INFORMATION:

Title: Importation of Baby Squash and Baby Courgettes From Zambia.

OMB Number: 0579–0347.

Type of Request: Extension of an approval of an information collection.

Abstract: The Plant Protection Act (PPA, 7 U.S.C. 7701 *et seq.*) authorizes the Secretary of Agriculture to restrict the importation, entry, or interstate movement of plants, plant products, and other articles to prevent the introduction of plant pests into the United States or their dissemination within the United States. Regulations authorized by the PPA concerning the importation of fruits and vegetables into the United States from certain parts of the world are contained in ''Subpart—Fruits and Vegetables'' (7 CFR 319.56–1 through 319.56–50).

Under these regulations, baby squash and baby courgettes from Zambia are subject to certain conditions before entering the United States to ensure that exotic plant pests are not introduced into the United States. Allowing baby squash and baby courgettes to be imported necessitates the use of certain information collection activities, including completing phytosanitary inspection certificates, maintaining inspection records, and labeling cartons.

We are asking the Office of Management and Budget (OMB) to approve our use of these information collection activities for an additional 3 years.

The purpose of this notice is to solicit comments from the public (as well as affected agencies) concerning our information collection. These comments will help us:

(1) Evaluate whether the collection of information is necessary for the proper performance of the functions of the Agency, including whether the information will have practical utility;

(2) Evaluate the accuracy of our estimate of the burden of the collection of information, including the validity of the methodology and assumptions used;

(3) Enhance the quality, utility, and clarity of the information to be collected; and

(4) Minimize the burden of the collection of information on those who are to respond, through use, as appropriate, of automated, electronic, mechanical, and other collection technologies; *e.g.,* permitting electronic submission of responses.

Estimate of burden: The public reporting burden for this collection of information is estimated to average 1 hour per response.

Respondents: National plant protection organization of Zambia.

Estimated annual number of respondents: 2.

Estimated annual number of responses per respondent: 2.

Estimated annual number of responses: 4.

Estimated total annual burden on respondents: 4 hours. (Due to averaging, the total annual burden hours may not equal the product of the annual number of responses multiplied by the reporting burden per response.)

All responses to this notice will be summarized and included in the request for OMB approval. All comments will also become a matter of public record.

Done in Washington, DC, this 20th day of June 2011.

Kevin Shea,

Acting Administrator, Animal and Plant Health Inspection Service.

[FR Doc. 2011–15867 Filed 6–23–11; 8:45 am]

BILLING CODE 3410–34–P

DEPARTMENT OF AGRICULTURE

Animal and Plant Health Inspection Service

[Docket No. APHIS–2011–0056]

Notice of Revision and Request for Extension of Approval of an Information Collection; Pale Cyst Nematode

AGENCY: Animal and Plant Health Inspection Service, USDA.

ACTION: Revision and extension of approval of an information collection; comment request.

SUMMARY: In accordance with the Paperwork Reduction Act of 1995, this notice announces the Animal and Plant Health Inspection Service's intention to request an extension of approval of an information collection associated with regulations for the interstate movement of regulated articles to prevent the spread of the pale cyst nematode to noninfested areas of the United States.

DATES: We will consider all comments that we receive on or before August 23, 2011.

ADDRESSES: You may submit comments by either of the following methods:

- *Federal eRulemaking Portal:* Go to *http://www.regulations.gov/#!documentDetail;D=APHIS-2011-0056-0001.*
- *Postal Mail/Commercial Delivery:* Send your comment to Docket No. APHIS–2011–0056, Regulatory Analysis and Development, PPD, APHIS, Station 3A–03.8, 4700 River Road, Unit 118, Riverdale, MD 20737–1238.

Supporting documents and any comments we receive on this docket may be viewed at *http://www.regulations.gov/#!docketDetail;D=APHIS-2011-0056* or in our reading room, which is located in Room 1141 of the USDA South Building, 14th Street and Independence Avenue, SW., Washington, DC. Normal reading room hours are 8 a.m. to 4:30 p.m., Monday through Friday, except holidays. To be sure someone is there to help you, please call (202) 6902817 before coming.

FOR FURTHER INFORMATION CONTACT: For information on the interstate movement of regulated articles to prevent the spread of pale cyst nematode, contact Mr. Jonathan Jones, Program Manager, Emergency and Domestic Programs, PPQ, APHIS, 4700 River Road, Unit 160, Riverdale, MD 20737; (301) 734–5038. For copies of more detailed information on the information collection, contact Mrs. Celeste Sickles, APHIS' Information Collection Coordinator, at (301) 851–2908.

SUPPLEMENTARY INFORMATION:

Title: Pale Cyst Nematode.

OMB Number: 0579–0322.

Type of Request: Revision and extension of approval of an information collection.

Abstract: As authorized by the Plant Protection Act (7 U.S.C. 7701 *et seq.*) (PPA), the Secretary of Agriculture, either independently or in cooperation with States, may carry out operations or measures to detect, eradicate, suppress, control, prevent, or retard the spread of plant pests that are new to or not widely distributed within the United States. This authority has been delegated to the Animal and Plant Health Inspection Service (APHIS) of the U.S. Department of Agriculture, which administers regulations to implement the PPA.

In accordance with the regulations in ''Subpart—Pale Cyst Nematode'' (7 CFR 301.86 through 301.86–9), APHIS restricts the interstate movement of certain articles to help prevent the artificial spread of pale cyst nematode, a major pest of potato crops in cool-temperature areas, to noninfested areas of the United States. The regulations contain requirements for the interstate movement of regulated articles and involve information collection activities, including certificates, permits, and compliance agreements. We are revising the title of the collection to ''Pale Cyst Nematode'' because the title of the original subpart, ''Potato Cyst Nematode,'' was changed in a 2009 final rule.

We are asking the Office of Management and Budget (OMB) to approve our use of these information collection activities for an additional 3 years.

The purpose of this notice is to solicit comments from the public (as well as affected agencies) concerning our information collection. These comments will help us:

(1) Evaluate whether the collection of information is necessary for the proper performance of the functions of the Agency, including whether the information will have practical utility;

(2) Evaluate the accuracy of our estimate of the burden of the collection of information, including the validity of the methodology and assumptions used;

(3) Enhance the quality, utility, and clarity of the information to be collected; and

(4) Minimize the burden of the collection of information on those who are to respond, through use, as appropriate, of automated, electronic, mechanical, and other collection technologies; *e.g.,* permitting electronic submission of responses.

Estimate of Burden: The public reporting burden for this collection of information is estimated to average 0.2057 hours per response.

Respondents: U.S. potato producers, packers, processors, and handlers of potatoes.

Estimated Annual Number of Respondents: 152.

Estimated Annual Number of Responses per respondent: 10.934.

Estimated Annual Number of Responses: 1,662.

Estimated total annual burden on respondents: 342 hours. (Due to averaging, the total annual burden hours may not equal the product of the annual number of responses multiplied by the reporting burden per response.)

All responses to this notice will be summarized and included in the request for OMB approval. All comments will also become a matter of public record.

Done in Washington, DC, this 20th day of June 2011.

Kevin Shea,

Acting Administrator, Animal and Plant Health Inspection Service.

[FR Doc. 2011–15871 Filed 6–23–11; 8:45 am]

BILLING CODE 3410–34–P

DEPARTMENT OF AGRICULTURE

Animal and Plant Health Inspection Service

[Docket No. APHIS–2011–0061]

Notice of Request for Extension of Approval of an Information Collection; Virus-Serum-Toxin Act and Regulations

AGENCY: Animal and Plant Health Inspection Service, USDA.

ACTION: Extension of approval of an information collection; comment request.

SUMMARY: In accordance with the Paperwork Reduction Act of 1995, this notice announces the Animal and Plant Health Inspection Service's intention to request an extension of approval of an information collection associated with the Virus-Serum-Toxin Act and regulations.

DATES: We will consider all comments that we receive on or before August 23, 2011.

ADDRESSES: You may submit comments by either of the following methods:

- *Federal eRulemaking Portal:* Go to *http://www.regulations.gov/#!documentDetail;D=APHIS-2011-0061-0001.*
- *Postal Mail/Commercial Delivery:* Send your comment to Docket No. APHIS–2011–0061, Regulatory Analysis and Development, PPD, APHIS, Station 3A–03.8, 4700 River Road Unit 118, Riverdale, MD 20737–1238.

Supporting documents and any comments we receive on this docket may be viewed at *http://www.regulations.gov/#!docketDetail;D=APHIS-2011-0061* or in our reading room, which is located in room 1141 of the USDA South Building, 14th Street and Independence Avenue, SW., Washington, DC. Normal reading room hours are 8 a.m. to 4:30 p.m., Monday through Friday, except holidays. To be sure someone is there to help you, please call (202) 690–2817 before coming.

FOR FURTHER INFORMATION CONTACT: For information on the Virus-Serum-Toxin Act and regulations, contact Dr. Albert Morgan, Section Leader, Operational Support Staff, Center for Veterinary Biologics, VS, APHIS, 4700 River Road Unit 148, Riverdale, MD 20737; (301) 734–8725. For copies of more detailed information on the information collection, contact Mrs. Celeste Sickles, APHIS' Information Collection Coordinator, at (301) 851–2908.

SUPPLEMENTARY INFORMATION:

Title: Virus-Serum-Toxin Act and Regulations.

OMB Number: 0579–0013.

Type of Request: Extension of approval of an information collection.

Abstract: Under the Virus-Serum-Toxin Act (21 U.S.C. 151–159), the Animal and Plant Health Inspection Service is authorized to promulgate regulations designed to prevent the importation, preparation, sale, or shipment of harmful veterinary biological products. These regulations are contained in title 9, Code of Federal Regulations, subchapter E, parts 102 to 124.

Veterinary biological products include viruses, serums, toxins, and analogous products of natural or synthetic origin, such as vaccines, antitoxins, or the immunizing components of microorganisms intended for the diagnosis, treatment, or prevention of diseases in domestic animals.

APHIS issues licenses to qualified establishments that produce veterinary biological products and issues permits to importers of such products. We also enforce requirements concerning production, packaging, labeling, and shipping of these products and set standards for the testing of these products.

To help ensure that veterinary biological products used in the United States are pure, safe, potent, and effective, APHIS requires certain information collection activities, including establishment license applications, product license applications, product import permit applications, product and test report forms, and field study summaries.

We are asking the Office of Management and Budget (OMB) to approve our use of these information collection activities for an additional 3 years.

The purpose of this notice is to solicit comments from the public (as well as affected agencies) concerning our information collection. These comments will help us:

(1) Evaluate whether the collection of information is necessary for the proper performance of the functions of the Agency, including whether the information will have practical utility;

(2) Evaluate the accuracy of our estimate of the burden of the collection of information, including the validity of the methodology and assumptions used;

(3) Enhance the quality, utility, and clarity of the information to be collected; and

(4) Minimize the burden of the collection of information on those who are to respond, through use, as appropriate, of automated, electronic, mechanical, and other collection technologies; *e.g.,* permitting electronic submission of responses.

Estimate of burden: The public reporting burden for this collection of information is estimated to average 3.42359 hours per response.

Respondents: U.S. importers, exporters, and shippers of veterinary biological products; State veterinary authorities; and operators of establishments that produce or test veterinary biological products or that

engage in product research and development.

Estimated annual number of respondents: 200.

Estimated annual number of responses per respondent: 108.63.

Estimated annual number of responses: 21,726.

Estimated total annual burden on respondents: 74,381 hours. (Due to averaging, the total annual burden hours may not equal the product of the annual number of responses multiplied by the reporting burden per response.)

All responses to this notice will be summarized and included in the request for OMB approval. All comments will also become a matter of public record.

Done in Washington, DC, this 20th day of June 2011.

Kevin Shea,

Acting Administrator, Animal and Plant Health Inspection Service.

[FR Doc. 2011–15888 Filed 6–23–11; 8:45 am]

BILLING CODE 3410–34–P

DEPARTMENT OF AGRICULTURE

Animal and Plant Health Inspection Service

[Docket No. APHIS–2011–0062]

Notice of Request for Extension of Approval of an Information Collection; Importation of Used Farm Equipment From Regions Affected With Foot-and-Mouth Disease

AGENCY: Animal and Plant Health Inspection Service, USDA.

ACTION: Extension of approval of an information collection; comment request.

SUMMARY: In accordance with the Paperwork Reduction Act of 1995, this notice announces the Animal and Plant Health Inspection Service's intention to request an extension of approval of an information collection associated with regulations for the importation of used farm equipment into the United States from regions affected with foot-and-mouth disease.

DATES: We will consider all comments that we receive on or before August 23, 2011.

ADDRESSES: You may submit comments by either of the following methods:

- *Federal eRulemaking Portal:* Go to *http://www.regulations.gov/#!documentDetail;D=APHIS-2011-0062-0001.*
- *Postal Mail/Commercial Delivery:* Send your comment to Docket No. APHIS–2011–0062, Regulatory Analysis and Development, PPD, APHIS, Station 3A–03.8, 4700 River Road Unit 118, Riverdale, MD 20737–1238.

Supporting documents and any comments we receive on this docket may be viewed at *http://www.regulations.gov/#!docketDetail;D=APHIS-2011-0062* or in our reading room, which is located in room 1141 of the USDA South Building, 14th Street and Independence Avenue SW., Washington, DC. Normal reading room hours are 8 a.m. to 4:30 p.m., Monday through Friday, except holidays. To be sure someone is there to help you, please call (202) 690–2817 before coming.

FOR FURTHER INFORMATION CONTACT: For information on regulations for the importation of used farm equipment from regions affected with foot-and-mouth disease, contact Dr. Tracye Butler, Assistant Director, Technical Trade Services Team—Products, NCIE, VS, APHIS, 4700 River Road Unit 40, Riverdale, MD 20737; (301) 734–3277. For copies of more detailed information on the information collection, contact Mrs. Celeste Sickles, APHIS' Information Collection Coordinator, at (301) 851–2908.

SUPPLEMENTARY INFORMATION:

Title: Importation of Used Farm Equipment From Regions Affected With Foot-and-Mouth Disease.

OMB Number: 0579–0195.

Type of Request: Extension of approval of an information collection.

Abstract: Under the Animal Health Protection Act (7 U.S.C. 8301 *et seq.*), the Animal and Plant Health Inspection Service of the United States Department of Agriculture is authorized, among other things, to prohibit or restrict the importation of animals, animal products, and other articles into the United States to prevent the introduction of animal diseases and pests. These regulations are contained in 9 CFR parts 92 through 98.

In part 94, § 94.1 prohibits the importation of used farm equipment into the United States from regions in which foot-and-mouth disease (FMD) or rinderpest exists, unless the equipment has been steam-cleaned prior to export to the United States so that it is free of exposed dirt and other particulate matter. Such equipment must be accompanied to the United States by an original certificate, signed by an authorized official of the national animal health service of the exporting region, stating that the farm equipment, after its last use and prior to export, was steam-cleaned free of all exposed dirt and other particulate matter.

We are asking the Office of Management and Budget (OMB) to approve our use of these information collection activities for an additional 3 years.

The purpose of this notice is to solicit comments from the public (as well as affected agencies) concerning our information collection. These comments will help us:

(1) Evaluate whether the collection of information is necessary for the proper performance of the functions of the Agency, including whether the information will have practical utility;

(2) Evaluate the accuracy of our estimate of the burden of the collection of information, including the validity of the methodology and assumptions used;

(3) Enhance the quality, utility, and clarity of the information to be collected; and

(4) Minimize the burden of the collection of information on those who are to respond, through use, as appropriate, of automated, electronic, mechanical, and other collection technologies; e.g., permitting electronic submission of responses.

Estimate of burden: The public reporting burden for this collection of information is estimated to average 0.2 hours per response.

Respondents: Exporters of used farm equipment and foreign animal health officials in FMD-affected regions.

Estimated annual number of respondents: 150.

Estimated annual number of responses per respondent: 6.666.

Estimated annual number of responses: 1,000.

Estimated total annual burden on respondents: 200 hours. (Due to averaging, the total annual burden hours may not equal the product of the annual number of responses multiplied by the reporting burden per response.)

All responses to this notice will be summarized and included in the request for OMB approval. All comments will also become a matter of public record.

Done in Washington, DC, this 20th day of June 2011.

Kevin Shea,

Acting Administrator, Animal and Plant Health Inspection Service.

[FR Doc. 2011–15892 Filed 6–23–11; 8:45 am]

BILLING CODE 3410–34–P

DEPARTMENT OF AGRICULTURE

Food and Nutrition Service

Agency Information Collection Activities: Proposed Collection; Comment Request—Form FNS–339, Federal-State Supplemental Nutrition Program(s) Agreement

AGENCY: Food and Nutrition Service, USDA.

ACTION: Notice.

SUMMARY: In accordance with the Paperwork Reduction Act of 1995, this notice invites the general public and other public agencies to comment on proposed information collections. The proposed information collection is a revision to a currently approved collection of information relating to the reporting and recordkeeping burden associated with completing and submitting form FNS–339, the Federal and State Agreement for the Special Supplemental Nutrition Program for Women, Infants and Children (WIC); the WIC Farmers' Market Nutrition Program (FMNP); and/or the Senior Farmers' Market Nutrition Program (SFMNP).

DATES: Written comments on this notice must be received on or before August 23, 2011.

ADDRESSES: Comments are invited on: (a) Whether the proposed collection of information is necessary for the proper performance of the functions of the agency, including whether the information will have practical utility; (b) the accuracy of the agency's estimate of the burden of the proposed collection of information, including the validity of the methodology and assumptions used; (c) ways to enhance the quality, utility and clarity of the information to be collected; and (d) ways to minimize the burden of the collection of information on those who are to respond, including through the use of appropriate automated, electronic, mechanical, or other technological collection techniques or other forms of information technology.

Comments may be sent to: Debra Whitford, Director, Supplemental Food Programs Division, Food and Nutrition Service, U.S. Department of Agriculture, 3101 Park Center Drive, Room 520, Alexandria, VA 22302. Comments may also be submitted via email to *WICHQ-SFPD@fns.usda.gov.* Be sure to include the title of the Notice in the subject line of the message. Comments will also be accepted through the Federal eRulemaking Portal. Go to *http://www.regulations.gov,* and follow the online instructions for submitting comments electronically.

All written comments will be open for public inspection at the office of the Food and Nutrition Service during regular business hours (8:30 a.m. to 5 p.m., Monday through Friday) at 3101 Park Center Drive, Alexandria, Virginia 22302, Room 518. All responses to this Notice will be summarized and included in the request for OMB approval, and will become a matter of public record.

FOR FURTHER INFORMATION CONTACT: Requests for additional information or copies of the information collection form and instructions should be directed to: Joan Carroll, (703) 305–2746.

SUPPLEMENTARY INFORMATION:

Title: Federal-State Supplemental Nutrition Program(s) Agreement.

OMB Number: 0584–0332.

Form Number: FNS–339.

Expiration Date: November 30, 2012.

Type of Request: Revision of a currently approved collection.

Abstract: The Healthy, Hunger-Free Kids Act of 2010 (the Act), Public Law 111–296, was enacted by the President on December 13, 2010. Section 361 of the Act requires that the Secretary of Agriculture incorporate in the Federal-State Agreement (form FNS–339) a provision for the WIC Program and FMNP that supports full use of Federal funds and excludes such funds from State budget restrictions or limitations including, at a minimum, hiring freezes, work furloughs, and travel restrictions affecting the WIC Program or the FMNP. Additional technical amendments are also being made to the FNS–339, as follows: (1) The title is changed to include FMNP and SFMNP; (2) coverage by statutes as well as regulations is added; (3) references to FMNP and SFMNP are added as necessary and appropriate; and (4) several typographical errors are corrected.

The agreement requires the signature of the Chief State agency official and includes a certification/assurance regarding drug free workplace, a certification regarding lobbying and a disclosure of lobbying activities. The signed agreement is the contract between USDA and each State agency that administers WIC, FMNP and SFMNP, thereby authorizing USDA to release funds to the State agencies for the administration of the Program(s) in the jurisdiction of the State in accordance with the provisions of 7 CFR parts 246, 248, and/or 249.

This revision does not increase the burden per response. However, the number of respondents (agencies administering WIC, FMNP and SFMNP) increased from 140 to 142 increasing the total annual burden from 35 to 35.5 hours.

Estimate of Burden: Public reporting burden for this collection of information is estimated to average 0.25 hours per response, including the time for reviewing instructions, searching existing data sources, gathering and maintaining the data needed, and completing and reviewing the collection of information.

Affected Public: State, Territorial and Tribal Agencies: Respondent Type: The Chief Health Officer of the WIC State agency, or the Chief Agency Official of the FMNP or SFMNP State agency (*e.g.,* a State Commissioner of Agriculture or Agency on Aging), if not administered by the WIC State agency in that state.

Estimated Number of Respondents: 142 respondents.

Estimated Number of Responses per Respondent: One.

Estimated Total Annual Burden on Respondents: 35.5 hours.

Dated: June 15, 2011.

Audrey Rowe,

Administrator, Food and Nutrition Service.

[FR Doc. 2011–15873 Filed 6–23–11; 8:45 am]

BILLING CODE 3410–30–P

DEPARTMENT OF AGRICULTURE

Forest Service

Siuslaw National Forest; Oregon; Oregon Dunes NRA Management Area 10 (C) Route and Area Designation

AGENCY: Forest Service, USDA.

ACTION: Notice of intent to prepare an environmental impact statement.

SUMMARY: The U.S. Forest Service will prepare an environmental impact statement (EIS) to amend the 1990 Siuslaw National Forest Land and Resources Management Plan (as amended by the 1994 Oregon Dunes Plan) in order to:

(1) Designate Off Highway Vehicle (OHV), also called Off Road Vehicle (ORV) routes within Management Area (MA) 10 (C) of the Oregon Dunes National Recreation Area (ODNRA) beyond the three year timeframe identified in the Plan;

(2) modify the boundaries of some areas currently zoned MA 10 (C) to MA 10 (B), in order to meet the management objectives of MA 10 (B); and

(3) designate the Banshee Hill route as a site specific exception within the 10 (C) Management Area.

Management Area 10 (C) requires that OHVs be operated only on designated routes, while Management Area 10 (B) allows OHVs to be operated anywhere

within the area. This document is being prepared under the following authority: 40 CFR 1501.7 and 40 CFR 1508.22.

DATES: Comments concerning the scope of the analysis must be received by 30 days from date of publication in the **Federal Register**. The draft environmental impact statement is expected December 2011 and the final environmental impact statement is expected May 2012.

ADDRESSES: Send written comments to Siuslaw National Forest, 855 Highway 101, Reedsport, OR 97467 Attention: Angie Morris, Team Lead. Comments may also be sent via e-mail to *comments-pacificnorthwest-siuslaw-centralcoast@fs.fed.us* or via facsimile to 541–271–6034.

FOR FURTHER INFORMATION CONTACT: Angie Morris, Recreation Planner, (541) 271–6040.

Individuals who use telecommunication devices for the deaf (TDD) may call the Federal Information Relay Service (FIRS) at 1–800–877–8339 between 8 a.m. and 8 p.m., Eastern Time, Monday through Friday.

SUPPLEMENTARY INFORMATION: In 1994, the Oregon Dunes Plan amended Siuslaw National Forest Plan direction for the Oregon Dunes National Recreation Area (ODNRA). The Plan allocated eleven Management Areas (MAs) within the ODNRA. One of the allocations is MA 10 (C), wherein ORVs are Restricted to Designated Routes. The Plan specifies that MA 10 (C) be managed to ''protect vegetated habitats while providing controlled opportunities for Off Road Vehicles (ORV) touring and traveling on designated routes.'' The Plan further states that the goal for this management area is ''to minimize ORV impacts on vegetated areas while allowing controlled opportunities for riding and travel through the area on designated routes for access to the beach and other areas which are open for ORV use.'' Approximately 4,445 acres are currently designated MA 10 (C).

With few exceptions, the routes originally designated with Plan approval and those designated prior to 1997 have remained the only officially designated routes in MA 10 (C). The incompleteness of the existing route system plus the lack of adequate signing and formal closure orders for most areas allocated MA 10 (C) permitted and, to a degree, encouraged the continued use of undesignated routes and the establishment of additional user-developed routes. As a result, the majority of existing routes traveled by OHVs within MA 10 (C) today are not designated routes. This has in turn led to greater and unnecessary impacts to important plant communities within the MA 10 (C) areas. The current effort is aimed at providing adequate OHV access and reasonable, enjoyable connections between valued riding areas while minimizing impacts to adjacent and intervening plant communities and habitat areas.

Purpose and Need for Action

The primary purpose and need for the project is to complete the designation and development of a comprehensive, understandable designated OHV route system within MA 10 (C) areas of the ODNRA as foreseen and directed by the Oregon Dunes Plan. Designation of additional routes to enhance already-existing designated routes and create a comprehensive, understandable system, coupled with enhanced route signing, subsequent rider education, unauthorized route closure under provisions at 36 CFR part 212, and strong enforcement:

→ Will simplify and facilitate OHV rider access through various parts of MA 10 (C) areas that are currently difficult to understand and navigate on the ground;

→ Will thereby encourage user acceptance of and compliance with designated route requirements in MA 10 (C) areas;

→ Will discourage use of unauthorized user-developed routes allowing them, in turn, to be rehabilitated or to revert naturally to a more natural condition;

→ Will simplify OHV management within MA 10 (C), allowing agency personnel to focus more on visitor education, resource restoration and strong enforcement against those who would persist in using unauthorized routes.

A secondary purpose and need for the project is to correct OHV management inconsistencies arising from minor mapping errors between 10 (C) and 10 (B) that date back to the original aerial photo interpretation and vegetation typing done for the 1994 Dunes Plan. Some small areas totaling about 287 acres out of a total of about 10,400 acres allocated for OHV use were erroneously allocated to MA 10 (C). In actuality, they were subsequently found on the ground to better meet the appearance, conditions and management objectives of MA 10 (B). Managing areas differently that appear the same on the ground, but are allocated as different management areas is problematic for visitor understanding, education efforts and enforcement. The criteria for changing areas from MA 10 (C) to MA 10 (B) include the ratio of open sand to vegetation, the existence of designated dispersed sand camps, and the predominance of non-native, invasive vegetation (*i.e.* Scotch broom and/or European beachgrass) over native non-invasive species. Non-native, invasive species, such as Scotch broom and European beachgrass do not need to be protected from impacts by OHVs.

Proposed Action

Within the Oregon Dunes National Recreation Area MA 10 (C), the Siuslaw National Forest proposes a non-significant Plan amendment to designate an additional ten routes open to motorized vehicles totalling approximately 3.96 miles. Nine of the ten proposed routes already exist on the ground as historic, user-developed routes and will involve no new construction or ground disturbance. One new route of approximately 0.62 miles would be constructed to replace a currently designated route that would be closed because it is impassible due to high water most of the year. Under provisions at 36 CFR part 212, existing user-developed routes not designated under this action would by definition be closed to future motorized use and would be obliterated or allowed to naturally revert. Approximately 103 miles of unathorized user-developed routes would be closed and eventually naturalized by this action. The project would also modify Management Area boundaries, changing approximately 287 acres, encompassing about 32 miles of user-created routes, from MA 10 (C) to MA 10 (B) in order to meet the management objectives of MA 10 (B). This action results in no net gain or loss of acres managed for OHV use and does not affect any other management areas. Finally, the route commonly known as Banshee Hill in the Umpqua Dunes riding area will be designated. It will be a site specific exception to the criteria otherwise used for designating routes within the 10C area because it does not connect otherwise unconnected riding areas and it does not serve all vehicle classes, being restricted by steepness and width to Class 1 (quads) and Class 3 (motorcycles) vehicles. Prior decisions such as those made in the Plan to allocate large blocks of land as open or closed to motorized use, areas managed for habitat protection, *etc.* will not be revisited.

In summary, the proposed action amends the Dunes Management Plan to:

(1) Designate an additional 3.96 miles of OHV routes within the 10 (C) area beyond the 3 year standard and guideline timeframe identified in the Plan;

(2) modify some Management Area boundaries, changing 287 acres from MA 10 (C) to MA 10 (B);

(3) designate the route known as Banshee Hill as a site specific exception within Management Area 10 (C).

Possible Alternatives

The EIS will consider the following alternatives:

(1) A ''No Action/No Change'' Alternative, that would not designate additional routes or reallocate MA 10 (C) areas to MA 10 (B);

(2) The proposed action;

(3) Alternatives to the proposed action that are within the scope of the project, meet the purpose and need, are responsive to the comments received during the scoping period and are approved by the Forest Supervisor for consideration.

Responsible Official

The responsible official will be the Forest Supervisor of the Siuslaw National Forest.

Nature of Decision To Be Made

The decision to be made falls within the broad framework of the existing Forest Plan. The Forest Supervisor of the Siuslaw National Forest will decide whether to implement the action as proposed, whether to take no action at this time, or whether to implement any alternatives that are proposed. Proposed actions are believed to constitute non-significant amendments of the Forest Plan and are narrow in scope, dealing only with off highway vehicle riding areas (MAs 10 (C) and 10 (B)) at the Oregon Dunes NRA, an area comprising approximately 2% of the entire Siuslaw National Forest.

Preliminary Issues

(1) Designation of OHV routes in MA 10 (C) may cause adverse effects to natural resources, nearby residents and/or other recreational users of the 10 (C) area.

(2) Minor modifications of MA 10 (C) to MA 10 (B) and associated changes in OHV use of the area may cause adverse effects to natural resources, nearby residents and/or other recreation users of motorized use areas.

Scoping Process

This notice of intent initiates the scoping process, which guides the development of the environmental impact statement. Public comments about this proposal are requested in order to assist in identifying issues, determine how to best manage the resources, and to focus the analysis. Comments received to this notice, including names and addresses of those who comment, will be considered part of the public record on this proposed action and will be available for public inspection. Comments submitted anonymously will be accepted and considered; however, those who submit anonymous comments will not have standing to appeal the subsequent decision under 36 CFR part 215. Additionally, pursuant to 7 CFR 1.27(d), any person may request the agency to withhold a submission from the public record by showing how the Freedom of Information Act (FOIA) permits such confidentiality. Persons requesting such confidentiality should be aware that, under FOIA, confidentiality may be granted in only very limited circumstances, such as to protect trade secrets. The Forest Service will inform the requester of the agency's decision regarding the request for confidentiality, and where the request is denied the agency will return the submission and notify the requester that the comments may be resubmitted with or without name and address within a specified number of days.

The Forest Service believes, at this early stage, it is important to give reviewers notice of several court rulings related to public participation in the environmental review process. First, reviewers of a draft EIS must structure their participation in the environmental review of the proposal so that it is meaningful and alerts an agency to the reviewer's position and contentions [*Vermont Yankee Nuclear Power Corp.* v. *NRDC,* 435 U.S. 519, 553 (1978)]. Also, environmental objections that could be raised at the draft EIS stage but that are not raised until after completion of the final EIS may be waived or dismissed by the courts [*City of Angoon* v. *Harris,* 490 F. Supp. 1334, 1338 (E.D. Wis. 1980)]. Because of these court rulings, it is very important that those interested in this proposed action participate by the close of the 45-day comment period so that comments and objections are made available to the Forest Service at a time when it can meaningfully consider them and respond to them in the final EIS.

To assist the Forest Service in identifying and considering issues and concerns on the proposed action, comments on the draft EIS should be as specific as possible. It is also helpful if comments refer to specific pages or chapters of the draft statement. Comments may also address the adequacy of the draft EIS of the merits of the alternatives formulated and discussed in the statement. Reviewers may wish to refer to the Council on Environmental Quality Regulations for implementing the procedural provisions of the National Environmental Policy Act at 40 CFR 1503.3 in addressing these points.

A draft EIS will be filed with the Environmental Protection Agency (EPA) and available for public review by December 2011. The EPA will publish a Notice of Availability (NOA) of the draft EIS in the **Federal Register**. The comment period on the draft EIS will be 45 days from the date the EPA publishes the notice of availability in the Federal Register. The final EIS is scheduled to be available Summer 2012.

Dated: June 8, 2011.

Katherine Harbick,

Acting Siuslaw National Forest Supervisor.

[FR Doc. 2011–15917 Filed 6–23–11; 8:45 am]

BILLING CODE; P

DEPARTMENT OF AGRICULTURE

Forest Service

Lolo and Kootenai National Forests' Sanders County Resource Advisory Committee

AGENCY: Forest Service, USDA.

ACTION: Notice of Sanders County Resource Advisory Committee Meetings.

SUMMARY: Pursuant to the authorities in the Federal Advisory Committee Act (Pub. L. 92–463) and under the Secure Rural Schools and Community Self-Determination Act of 2000 (Pub. L. 106–393) the Lolo and Kootenai National Forests' Sanders County Resource Advisory Committee will meet on July 21, 2011 at 7 p.m. and on August 11, 2011 at 7 p.m. in Thompson Falls, Montana for business meetings. These meetings are open to the public. The committee will meet on June 18, 2011 in Thompson Falls, Montana for a field trip to project sites. This trip is open to the public.

DATES: June 18, 2011; July 21, 2011; August 11, 2011.

ADDRESSES: The meetings will be held at the Thompson Falls Courthouse, 1111 Main Street, Thompson Falls, MT 59873.

FOR FURTHER INFORMATION CONTACT: Randy Hojem, Designated Federal Official (DFO), District Ranger, Plains Ranger District, Lolo National Forest at (406) 826–3821.

SUPPLEMENTARY INFORMATION: The June 18, 2011 meeting will include a field trip to project sites. The July 21, 2011 meeting agenda will include an overview of all 2011 project proposal submissions. The August 11, 2011 meeting will be a voting meeting where

the committee will recommend projects for 2011 funding. If the meeting location is changed, notice will be posted in the local newspapers, including the Clark Fork Valley Press, and Sanders County Ledger.

Dated: May 24, 2011.

Randy R. Hojem,

District Ranger.

[FR Doc. 2011–15832 Filed 6–23–11; 8:45 am]

BILLING CODE 3410–11–P

ARCHITECTURAL AND TRANSPORTATION BARRIERS COMPLIANCE BOARD

Meetings

AGENCY: Architectural and Transportation Barriers Compliance Board.

ACTION: Notice of meetings.

SUMMARY: The Architectural and Transportation Barriers Compliance Board (Access Board) plans to hold its regular committee and Board meetings in Washington, DC, Monday through Wednesday, July 11–13, 2011, at the times and location noted below.

DATES: The schedule of events is as follows:

Monday, July 11, 2011

10:45–11:15 a.m.—Budget Committee.
11:15–Noon—Planning and Evaluation Committee.
1:30–3:30 p.m.—Technical Programs Committee .
3:45–4:30 p.m.—Ad Hoc Committee Meetings (Closed to Public).

Tuesday, July 12, 2011

9:30–10:30 a.m.—Ad Hoc Committee on Frontier Issues (guest speaker: Paul Lloyd, Department of Agriculture, TARGET Center).
10:45–Noon—Ad Hoc Committee Meetings (Closed to Public).
1:30–2:45 p.m.—Presentation on Research Collaboration (guest speakers: Sue Swenson, National Institute on Disability and Rehabilitation Research and Connie Pledger, Interagency Committee on Disability Research).
3–4p.m.—Ad Hoc Committee Meetings (Closed to Public).

Wednesday, July 13, 2011

9:30–11 a.m.—Ad Hoc Committee on Outdoor Developed Areas and Shared Use Paths (Closed to Public).
10:45–Noon—Presentation on Accessible Taxis (guest speakers: Mathew McCollough; Kelly Buckland, National Council on Independent Living; Wendy Klancher, Metropolitan Washington Council of Governments; and Terry Moakley, Association of Travel Instruction).
1:30–3 p.m.—Board Meeting (guest speaker: Allison Nichol, Chief, Disability Rights Section, Department of Justice).

ADDRESSES: All meetings will be held at the Access Board Conference Room, 1331 F Street, NW., Suite 800, Washington, DC 20004.

FOR FURTHER INFORMATION CONTACT: For further information regarding the meetings, please contact David Capozzi, Executive Director, (202) 272–0010 (voice); (202) 272–0082 (TTY).

SUPPLEMENTARY INFORMATION: At the Board meeting scheduled on the afternoon of Wednesday, July 13, 2011, the Access Board will consider the following agenda items:

- Approval of the draft May 11, 2011 meeting minutes.
- Budget Committee Report.
- Technical Programs Committee Report.
- Planning and Evaluation Committee Report.
- Ad Hoc Committee Reports:
  - Outdoor Developed Areas—text of final rule (vote).
- Executive Director's Report.
- Public Comment, Open Topics.

All meetings are accessible to persons with disabilities. An assistive listening system, computer assisted real-time transcription (CART), and sign language interpreters will be available at the Board meeting and committee meetings. Persons attending Board meetings are requested to refrain from using perfume, cologne, and other fragrances for the comfort of other participants (see *http://www.access-board.gov/about/policies/fragrance.htm* for more information).

David M. Capozzi,

Executive Director.

[FR Doc. 2011–15942 Filed 6–23–11; 8:45 am]

BILLING CODE 8150–01–P

DEPARTMENT OF COMMERCE

Submission for OMB Review; Comment Request

The Department of Commerce will submit to the Office of Management and Budget (OMB) for clearance the following proposal for collection of information under the provisions of the Paperwork Reduction Act (44 U.S.C. Chapter 35).

Agency: National Oceanic and Atmospheric Administration (NOAA).

Title: Northeast Region Observer Providers Requirements.

OMB Control Number: 0648–0546.

Form Number(s): NA.

Type of Request: Regular submission (extension of a current information collection).

Number of Respondents: 631.

Average Hours per Response: Observer deployment report, observer availability report, request for an observer, 10 minutes; raw observer data, biological samples, notification of unavailability of observers, observer contact list updates, 5 minutes; observer availability updates, 1 minute; safety refusals, incident reports, requests for observer training, service provider material submissions, service provider contracts, 30 minutes; observer debriefings, 2 hours; observer provider permit applications, applicant response to a denial, 10 hours; rebuttal of removal from list of approved service providers, 8 hours.

Burden Hours: 6,236.

Needs and Uses: Under the Magnuson-Stevens Fishery Conservation and Management Act, the Secretary of Commerce (Secretary) has the responsibility for the conservation and management of marine fishery resources. Much of this responsibility has been delegated to the National Oceanic and Atmospheric Administration (NOAA)/National Marine Fisheries Service (NMFS). Under this stewardship role, the Secretary was given certain regulatory authorities to ensure the most beneficial uses of these resources. One of the regulatory steps taken to carry out the conservation and management objectives is to collect data from users of the resource.

Regulations at 50 CFR 648.11(g) require observer service providers to comply with specific requirements in order to operate as an approved provider in the Atlantic sea scallop (scallop) fishery. Observer service providers must comply with the following requirements: Submit applications for approval as an observer service provider; formally request observer training by the Northeast Fisheries Observer Program (NEFOP); submit observer deployment reports and biological samples; give notification of whether a vessel must carry an observer within 24 hours of the vessel owner's notification of a prospective trip; maintain an updated contact list of all observers that includes the observer identification number; observer's name, mailing address, e-mail address, phone numbers, homeports or fisheries/trip types assigned, and whether or not the observer is ''in service.'' The regulations

also require observer service providers submit any outreach materials, such as informational pamphlets, payment notification, and descriptions of observer duties as well as all contracts between the service provider and entities requiring observer services for review to NMFS/NEFOP. Observer service providers also have the option to respond to application denials, and submit a rebuttal in response to a pending removal from the list of approved observer providers. These requirements allow NMFS/NEFOP to effectively administer the scallop observer program.

Affected Public: Business or other for-profit organizations.

Frequency: Annually, semi-annually, monthly, daily and on occasion.

Respondent's Obligation: Mandatory.

OMB Desk Officer: *OIRA_Submission@omb.eop.gov.*

Copies of the above information collection proposal can be obtained by calling or writing Diana Hynek, Departmental Paperwork Clearance Officer, (202) 482–0266, Department of Commerce, Room 6616, 14th and Constitution Avenue, NW., Washington, DC 20230 (or via the Internet at *dHynek@doc.gov*).

Written comments and recommendations for the proposed information collection should be sent within 30 days of publication of this notice to *OIRA_Submission@omb.eop.gov.*

Dated: June 20, 2011.

Gwellnar Banks,

Management Analyst, Office of the Chief Information Officer.

[FR Doc. 2011–15778 Filed 6–23–11; 8:45 am]

BILLING CODE 3510–22–P

DEPARTMENT OF COMMERCE

National Oceanic and Atmospheric Administration

RIN 0648–XA503

Marine Mammals; File No. 16510

AGENCY: National Marine Fisheries Service (NMFS), National Oceanic and Atmospheric Administration (NOAA), Commerce.

ACTION: Notice; receipt of application.

SUMMARY: Notice is hereby given that Blank Park Zoo [Kevin V. Drees, Responsible Party], 7401 SW. Ninth, Des Moines, IA 50315, has applied in due form for a permit to import for public display up to five non-releasable California sea lions (*Zalophus californianus*) and harbor seals (*Phoca vitulina*).

DATES: Written, telefaxed, or e-mail comments must be received on or before July 25, 2011.

ADDRESSES: The application and related documents are available upon written request or by appointment in the following offices:

Permits, Conservation and Education Division, Office of Protected Resources, NMFS, 1315 East-West Highway, Room 13705, Silver Spring, MD 20910; phone (301) 427–8401; fax (301) 713–0376; and

Southeast Region, NMFS, 263 13th Avenue South, Saint Petersburg, Florida 33701; phone (727) 824–5312; fax (727) 824–5309.

Written comments on this application should be submitted to the Chief, Permits, Conservation and Education Division, at the address listed above. Comments may also be submitted by facsimile to (301) 713–0376, or by e-mail to *NMFS.Pr1Comments@noaa.gov.* Please include the File No. 16510 in the subject line of the e-mail comment.

Those individuals requesting a public hearing should submit a written request to the Chief, Permits, Conservation and Education Division at the address listed above. The request should set forth the specific reasons why a hearing on this application would be appropriate.

FOR FURTHER INFORMATION CONTACT: Laura Morse or Jennifer Skidmore, (301) 427–8401.

SUPPLEMENTARY INFORMATION: The subject permit is requested under the authority of the Marine Mammal Protection Act of 1972, as amended (MMPA; 16 U.S.C. 1361 *et seq.*), and the regulations governing the taking and importing of marine mammals (50 CFR part 216).

The applicant requests authorization to import up to five non-releasable marine mammals over the next five year period including two harbor seals in the fall of 2011 from the Marine Mammal Rescue Division of the Vancouver Aquarium, Vancouver, Canada for purposes of public display at the Blank Park Zoo. The receiving facility is: (1) Open to the public on regularly scheduled basis with access that is not limited or restricted other than by charging an admission fee; (2) offers an educational program based on professionally recognized standards; and (3) holds an Exhibitor's License, number 42–C–0168, issued by the U.S. Department of Agriculture under the Animal Welfare Act (7 U.S.C. 2131–59). The permit would expire five years after the date of issuance.

In addition to determining whether the applicant meets the three public display criteria, NMFS must determine whether the applicant has demonstrated that the proposed activity is humane and does not represent any unnecessary risks to the health and welfare of marine mammals; that the proposed activity by itself, or in combination with other activities, will not likely have a significant adverse impact on the species or stock; and that the applicant's expertise, facilities and resources are adequate to accomplish successfully the objectives and activities stated in the application.

In compliance with the National Environmental Policy Act of 1969 (42 U.S.C. 4321 *et seq.*), an initial determination has been made that the activity proposed is categorically excluded from the requirement to prepare an environmental assessment or environmental impact statement.

Concurrent with the publication of this notice in the **Federal Register**, NMFS is forwarding copies of the application to the Marine Mammal Commission and its Committee of Scientific Advisors.

Dated: June 20, 2011.

P. Michael Payne,

Chief, Permits, Conservation and Education Division, Office of Protected Resources, National Marine Fisheries Service.

[FR Doc. 2011–15896 Filed 6–23–11; 8:45 am]

BILLING CODE 3510–22–P

DEPARTMENT OF COMMERCE

National Oceanic and Atmospheric Administration

RIN 0648–XA514

Gulf of Mexico Fishery Management Council; Public Meeting

AGENCY: National Marine Fisheries Service (NMFS), National Oceanic and Atmospheric Administration (NOAA), Commerce.

ACTION: Council to convene a public meeting.

SUMMARY: The Gulf of Mexico Fishery Management Council will convene a meeting of the Ad Hoc Red Snapper Individual Fishing Quota (IFQ) 5-year Review Panel.

DATES: The meeting will convene at 1 p.m. on Tuesday, July 12, 2011 and conclude by 5 p.m., Wednesday, July 13, 2011.

ADDRESSES: The meeting will be held at the Gulf of Mexico Fishery Management Council, 2203 North Lois Avenue, Suite 1100, Tampa, FL 33607; telephone: (813) 348–1630.

Council address: Gulf of Mexico Fishery Management Council, 2203 N.

Lois Avenue, Suite 1100, Tampa, FL 33607.

FOR FURTHER INFORMATION CONTACT: Dr. Assane Diagne, Economist; Gulf of Mexico Fishery Management Council; telephone: (813) 348–1630.

SUPPLEMENTARY INFORMATION: The ad hoc red snapper IFQ advisory panel will discuss issues related to the 5-year review of the red snapper IFQ program and consider potential improvements to the program.

Copies of the agenda and other related materials can be obtained by calling (813) 348–1630 or can be downloaded from the Council's ftp site, *ftp.gulfcouncil.org.*

Although other non-emergency issues not on the agenda may come before the Scientific and Statistical Committees for discussion, in accordance with the Magnuson-Stevens Fishery Conservation and Management Act, those issues may not be the subject of formal action during this meeting. Actions of the Scientific and Statistical Committees will be restricted to those issues specifically identified in the agenda and any issues arising after publication of this notice that require emergency action under Section 305(c) of the Magnuson-Stevens Fishery Conservation and Management Act, provided the public has been notified of the Council's intent to take action to address the emergency.

Special Accommodations

This meeting is physically accessible to people with disabilities. Requests for sign language interpretation or other auxiliary aids should be directed to Kathy Pereira at the Council (see **ADDRESSES**) at least 5 working days prior to the meeting.

Dated: June 20, 2011.

Tracey L. Thompson,

Acting Director, Office of Sustainable Fisheries, National Marine Fisheries Service.

[FR Doc. 2011–15768 Filed 6–23–11; 8:45 am]

BILLING CODE 3510–22–P

DEPARTMENT OF COMMERCE

National Oceanic and Atmospheric Administration

RIN 0648–XA515

Gulf of Mexico Fishery Management Council (Council); Public Meeting

AGENCY: National Marine Fisheries Service (NMFS), National Oceanic and Atmospheric Administration (NOAA), Commerce.

ACTION: Notice of a public meeting.

SUMMARY: The Gulf of Mexico Fishery Management Council will convene a public meeting via webinar.

DATES: The meeting will be held July 12, 2011. See **SUPPLEMENTARY INFORMATION** for time.

ADDRESSES: The meeting will be held via webinar.

Council address: Gulf of Mexico Fishery Management Council, 2203 North Lois Avenue, Suite 1100, Tampa, FL 33607.

FOR FURTHER INFORMATION CONTACT: Dr. Richard Leard, Deputy Executive Director, Gulf of Mexico Fishery Management Council; telephone: (813) 348–1630.

SUPPLEMENTARY INFORMATION: The Gulf of Mexico Fishery Management Council will hold a meeting via webinar to review its June 2011 actions regarding preferred alternatives for annual catch limit and accountability measures for Gulf group Spanish and possibly make modifications.

The webinar is scheduled to begin at 10 a.m./EST, 9 a.m./CST on July 12, 2011 and is expected last no longer than 30 minutes. Interested persons must register to participate in the webinar via the Gulf Council's Web site at *http://www.gulfcouncil.org.* Participation may be by computer or telephone. An agenda and meeting materials may be obtained by contacting the Council at the address listed above.

Although other non-emergency issues not on the agendas may come before the Council for discussion, in accordance with the Magnuson-Stevens Fishery Conservation and Management Act (Magnuson-Stevens Act), those issues may not be the subject of formal action during the meeting. Actions of the Council will be restricted to those issues specifically identified in the agenda and any issues arising after publication of this notice that require emergency action under Section 305(c) of the Magnuson-Stevens Act, provided the public has been notified of the Council's intent to take action to address the emergency.

Special Accommodations

The meeting is physically accessible to people with disabilities. Requests for sign language interpretation or other auxiliary aids should be directed to Kathy Pereira at the Council (*see* **ADDRESSES**) at least 5 working days prior to the meeting.

Dated: June 20, 2011.

Tracey L. Thompson,

Acting Director, Office of Sustainable Fisheries, National Marine Fisheries Service.

[FR Doc. 2011–15769 Filed 6–23–11; 8:45 am]

BILLING CODE 3510–22–P

DEPARTMENT OF COMMERCE

National Oceanic and Atmospheric Administration

RIN 0648–XA490

National Saltwater Angler Registry Program

AGENCY: National Marine Fisheries Service (NMFS), National Oceanic and Atmospheric Administration (NOAA), Commerce.

ACTION: Notice.

SUMMARY: NMFS has designated the state of New Jersey and the District of Columbia as exempted states for anglers, spear fishers and for-hire fishing vessels.

DATES: The designation of the states as exempted states is effective on June 24, 2011.

ADDRESSES: Gordon C. Colvin, Fishery Biologist, NMFS ST–12453, 1315 East-West Highway, Silver Spring, MD 20910.

FOR FURTHER INFORMATION CONTACT: Gordon C. Colvin, Fishery Biologist; (301) 427–8118; *e-mail: Gordon.Colvin@noaa.gov.*

SUPPLEMENTARY INFORMATION: The final rule implementing the National Saltwater Angler Registry Program, 50 CFR part 600, subpart P, was published in the **Federal Register** on December 30, 2008 (73 FR 79705). The final rule requires persons who are angling, spear fishing or operating a for-hire fishing vessel in the U.S. Exclusive Economic Zone or for anadromous species to register annually with NOAA. However, persons who are licensed or registered by, or state residents who are not required to register or hold a license issued by, a state that is designated as an exempted state are not required to register with NOAA. The final rule sets forth the requirements for states to be designated as exempted states. Generally, exempted states must agree to provide to NMFS names, addresses, dates of birth and telephone numbers of the persons licensed or registered under a qualifying state license and/or registry program, or to provide catch and effort data from a qualifying regional survey of recreational fishing, and enter into a Memorandum of Agreement with NMFS to formalize the data reporting agreement.

NMFS has received proposals for providing license/registry data from the states listed below, has determined that the states' programs qualify for exempted state designation under the provisions of the final rule, and has

entered into Memoranda of Agreement with each of the states. Therefore, pursuant to 50 CFR 600.1415(b)(3), notice is hereby given that the following states are designated as exempted states under 50 CFR 600.1415: New Jersey and the District of Columbia. Persons who hold a valid fishing license or registration issued by these exempted states for angling, spear fishing or operating a for-hire fishing vessel in tidal waters are not required to register with NOAA under 50 CFR 600.1405(b). Persons who are residents of these exempted states who are not required to hold a fishing license, or to be registered to fish under the laws of these exempted states, also are not required to register with NOAA.

Dated: June 10, 2011.

Eric C. Schwaab,

Assistant Administrator for Fisheries, National Marine Fisheries Service.

[FR Doc. 2011–15893 Filed 6–23–11; 8:45 am]

BILLING CODE 3510–22–P

DEPARTMENT OF COMMERCE

National Oceanic and Atmospheric Administration

[RIN 0648–XA506]

Endangered Species; File Nos. 16266 and 16291

AGENCY: National Marine Fisheries Service (NMFS), National Oceanic and Atmospheric Administration (NOAA), Commerce.

ACTION: Issuance of permits.

SUMMARY: Notice is hereby given that the Virginia Living Museum, 524 J. Clyde Morris Boulevard, Newport News, VA 23602 [Chris Crippen, Responsible Party], and the Maritime Aquarium at Norwalk, 10 North Water Street, South Norwalk, CT 06854 [Ellen Riker, Responsible Party] have been issued permits to take shortnose sturgeon for purposes of enhancement.

ADDRESSES: The permit and related documents are available for review upon written request or by appointment in the following offices:

Permits, Conservation and Education Division, Office of Protected Resources, NMFS, 1315 East-West Highway, Room 13705, Silver Spring, MD 20910; phone (301) 713–2289; fax (301) 713–0376; and

Northeast Region, NMFS, 55 Great Republic Drive, Gloucester, MA 01930; phone (978) 281–9328; fax (978) 281–9394.

FOR FURTHER INFORMATION CONTACT: Colette Cairns or Jennifer Skidmore, (301) 713–2289.

SUPPLEMENTARY INFORMATION: On March 21, 2011, notice was published in the **Federal Register** (76 FR 15300) that a request for enhancement permits to take shortnose sturgeon had been submitted by the above-named organizations. The requested permits have been issued under the authority of the Endangered Species Act of 1973, as amended (ESA; 16 U.S.C. 1531 *et seq.*) and the regulations governing the taking, importing, and exporting of endangered and threatened species (50 CFR Parts 222–226).

The Virginia Living Museum and the Maritime Aquarium at Norwalk have been issued permits to continue enhancement activities previously authorized under Permit Nos. 1472 and 1473, respectively. Activities include the continued maintenance, transport and educational display of captive-bred, non-releaseable adult shortnose sturgeon. The permit does not authorize any takes from the wild, nor does it authorize any release of captive sturgeon into the wild. The permit is issued for a duration of 5 years.

Issuance of this permit, as required by the ESA, was based on a finding that such permit (1) Was applied for in good faith, (2) will not operate to the disadvantage of such endangered or threatened species, and (3) is consistent with the purposes and policies set forth in section 2 of the ESA.

Dated: June 20, 2011.

P. Michael Payne,

Chief, Permits, Conservation and Education Division, Office of Protected Resources, National Marine Fisheries Service.

[FR Doc. 2011–15894 Filed 6–23–11; 8:45 am]

BILLING CODE 3510–22–P

DEPARTMENT OF COMMERCE

National Oceanic and Atmospheric Administration

RIN 0648–XA508

Marine Mammals; File No. 14502

AGENCY: National Marine Fisheries Service (NMFS), National Oceanic and Atmospheric Administration (NOAA), Commerce.

ACTION: Notice; issuance of permit.

SUMMARY: Notice is hereby given that a permit has been issued to Russell Fielding, Louisiana State University, Room 227, Baton Rouge, Louisiana 70803 to import samples from Risso's (*Grampus griseus*), spinner (*Stenella longirostris*), and spotted (*S. frontalis*) dolphins and short-finned pilot whales (*Globicephala macrorhynchus*) for the purpose of scientific research.

ADDRESSES: The permit and related documents are available for review upon written request or by appointment in the following offices:

Permits, Conservation and Education Division, Office of Protected Resources, NMFS, 1315 East-West Highway, Room 13705, Silver Spring, MD 20910; phone (301)427–8401; fax (301)713–0376; and

Southeast Region, NMFS, 263 13th Avenue South, Saint Petersburg, Florida 33701; phone (727)824–5312; fax (727)824–5309.

FOR FURTHER INFORMATION CONTACT: Jennifer Skidmore or Kristy Beard, (301)427–8401.

SUPPLEMENTARY INFORMATION: On June 9, 2009, notice was published in the **Federal Register** (74 FR 27286) that a request for a permit to import specimens for scientific research had been submitted by the above-named applicant. The requested permit has been issued under the authority of the Marine Mammal Protection Act of 1972, as amended (16 U.S.C. 1361 *et seq.*) and the regulations governing the taking and importing of marine mammals (50 CFR part 216). Permit No. 14502 authorizes the importation of muscle, blubber, and teeth samples from Risso's, spinner, and spotted dolphins and short-finned pilot whales collected during the legal cetacean hunts of St. Vincent and the Grenadines. Samples from up to 100 individuals will be imported to the NOAA Center for Coastal Fisheries and Habitat Research in Beaufort, North Carolina, for contaminant analysis (specifically methyl-mercury). No animals will be taken to provide samples for this research and no marine mammals will be incidentally harassed. The permit is valid through June 17, 2012.

In compliance with the National Environmental Policy Act of 1969 (42 U.S.C. 4321 *et seq.*), a final determination has been made that the activity proposed is categorically excluded from the requirement to prepare an environmental assessment or environmental impact statement.

Dated: June 20, 2011.

P. Michael Payne,

Chief, Permits, Conservation and Education Division, Office of Protected Resources, National Marine Fisheries Service.

[FR Doc. 2011–15899 Filed 6–23–11; 8:45 am]

BILLING CODE 3510–22–P

DEPARTMENT OF COMMERCE

National Oceanic and Atmospheric Administration

RIN 0648–XA430

Takes of Marine Mammals Incidental to Specified Activities; Marine Geophysical Survey in the Central-Western Bering Sea, August 2011; Correction

AGENCY: National Marine Fisheries Service (NMFS), National Oceanic and Atmospheric Administration (NOAA), Commerce.

ACTION: Notice; proposed Incidental Harassment Authorization; request for comments; correction.

SUMMARY: On June 8, 2011, a notice was published in the **Federal Register** announcing that NMFS had received a request for authorization to unintentionally take marine mammals incidental to a marine geophysical survey to be conducted in the central-western Bering Sea in August 2011. That document contained a table with incorrect information regarding the occurrence and densities of marine mammals that may occur in or near the proposed seismic survey areas. This document presents a new table with corrections. All other information is unchanged.

FOR FURTHER INFORMATION CONTACT: Brian D. Hopper, (301) 713–2289.

SUPPLEMENTARY INFORMATION: The notice announcing that NMFS had received an application for the unintentional take of marine mammals incidental to a marine geophysical survey in the central-western Bering Sea in August 2011 (76 FR 33246; June 8, 2011) contained errors in Table 2 regarding the occurrence and densities of marine mammals that may occur in or near the proposed seismic survey area. Accordingly, Table 2 in **Federal Register** document 76 FR 33246 (pages 33250–33251) has been revised to read as follows:

BILLING CODE 3510–22–P

Table 2. The habitat, regional abundance, and conservation status of marine mammals that may occur in or near the proposed seismic survey areas in the central-western Bering Sea. [See text and Tables 2 to 4 in USGS's application and EA for further details.]

Species	Sumer occurrence, Bering Sea	Habitat	Abundance estimates for stocks	ESA[1]	MMPA[2]	Density (#/1,000 km^2) Best[3] | Max[4]	
Mysticetes							
North Pacific right whale (Eubalaena japonica)	Rare	Coastal, shelf, offshore	Low hundreds[5]	EN	D	0	0
Bowhead whale (Balaena mysticetus)	Uncommon	Pack ice, coastal	12,631[6]	EN	D	0	0
Gray whale (Eschrichtius robustus)	Common	Coastal, shallow shelf	NW Pacific: 19,126 NE Pacific: ~100[7]	DL/E[8]	NC D (Western populati	0.01	0.12
Humpback whale (Megaptera novaeangliae)	Common	Offshore, nearshore in winter	20,808[9]	EN	D	0.40	1.04
Minke whale (Balaenoptera acutorostrata)	Common	Nearshore, offshore, ice	25,000[10]	NL	NC	1.23	4.10
Sei whale (Balaenoptera borealis)	Uncommon	Offshore, shelf	7,260 – 12,620[11]	EN	D	0.05	0.58
Fin whale (Balaenoptera physalus)	Common	Offshore, deep water	13,620-18,680[12]	EN	D	3.94	17.00
Blue whale (Balaneoptera musculus)	Rare	Offshore, shelf, coastal	3,500[13]	EN	D	0	0
Odontocetes							
Sperm whale (Physeter macrocephalus)	Uncommon	Offshore	24,000[14]	EN	D	0.07	0.14
Cuvier's beaked whale (Ziphius cavirostris)	Very rare	Offshore	20,000[15]	NL	NC	0	0
Baird's beaked whale (Berardius bairdii)	Uncommon	Offshore	7,000[16]	NL	NC	0.07	0.10

Species	Sumer occurrence, Bering Sea	Habitat	Abundance estimates for stocks	ESA[1]	MMPA[2]	Density (#/1,000 km^2) Best[3]	Max[4]
Stejneger's beaked whale (Mesoplodon stejnegeri)	Uncommon	Offshore	N.A.	NL	NC	0.04	0.12
Pacific white-sided dolphin (Lagenorhynchus obliquidens)	Rare	Pelagic, shelf, coastal	988,000[17]	NL	NC	0.03	0.04
Killer whale (Orcinus orca)	Common	Pelagic, shelf, coastal	8,500[18]	NL	NC	2.82	3.96
Dall's porpoise (Phocoenoides dalli)	Common	Nearshore, offshore	1,186,000[19]	NL	NC	8.86	18.25
Pinnipeds							
Northern fur seal (Callorhinus ursinus)	Common	Offshore and coastal	1.1 million[20]	NL	D	28.5	42.75
Steller sea lion (Eumetopias jubatus)	Common	Coastal	58,334[-] 72,223[21] 42,366[22]	T[23] EN[23]	D	2.70	4.05
Spotted seal (Phoca largha)	Uncommon	Ice	AK: ~59,214[24]	NL	NC	N.A.	N.A.
Ringed seal (Pusa hispida)	Uncommon	Ice, landfast, pack	AK: 249,000[24]	NL	NC	N.A.	N.A.
Ribbon seal (Histriophoca fasciata)	Common	Ice	Bering Sea: 90,000-100,000[24]	NL	NC	43.60	65.40

N.A. Not available or not assessed.
[1] U.S. Endangered Species Act: EN = Endangered, T = Threatened, NL = Not listed.
[2] U.S. Marine Mammal Protection Act: D = Depleted, NC = Not Classified.
[3] Best density estimate as listed in Table 3 of the application.[4] Maximum density estimate as listed in Table 3 of the application.
[5] Western population (Brownell et al., 2001)
[6] Based on 2003-2005 surveys (Koski et al. 2010).
[7] Northwest (NW) Pacific (Allen and Angliss, 2010); Northeast (NE) Pacific (Reilly et al., 2008).
[8] The western (Northeast Pacific) subpopulation is listed as Endangered.
[9] North Pacific Ocean (Barlow et al., 2009).
[10] Northwest Pacific (Buckland et al., 1992; IWC, 2010).
[11] North Pacific (Tillman, 1977).
[12] North Pacific (Ohsumi and Wada, 1974).
[13] Eastern North Pacific (NMFS, 1998).
[14] Eastern temperate North Pacific (Whitehead, 2002b).
[15] Eastern Tropical Pacific (Wade and Gerrodette, 1993).
[16] Western North Pacific (Reeves and Leatherwood, 1994; Kasuya, 2002).
[17] North Pacific Ocean (Miyashita, 1993b).
[18] Eastern Tropical Pacific (Ford, 2002)
[19] North Pacific Ocean and Bering Sea (Houck and Jefferson, 1999)
[20] North Pacific (Gelatt and Lowry, 2008).
[21] Eastern U.S. Stock (Allen and Angliss, 2010).
[22] Western U.S. Stock (Allen and Angliss, 2010).
[23] Eastern stock is listed as threatened, and the western stock is listed as endangered.
[24] Burns 1981.

Dated: June 20, 2011.

P. Michael Payne,

Chief, Permits, Conservation and Education Division, Office of Protected Resources, National Marine Fisheries Service.

[FR Doc. 2011–15861 Filed 6–23–11; 8:45 am]

BILLING CODE 3510–22–C

COMMITTEE FOR PURCHASE FROM PEOPLE WHO ARE BLIND OR SEVERELY DISABLED

Procurement List; Proposed Additions and Deletion

AGENCY: Committee for Purchase From People Who Are Blind or Severely Disabled.

ACTION: Proposed Additions to and Deletion from the Procurement List.

SUMMARY: The Committee is proposing to add products and a service to the Procurement List that will be furnished by nonprofit agencies employing persons who are blind or have other severe disabilities, and deletes a product previously furnished by such agency.

Comments Must Be Received On or Before: 7/25/2011.

ADDRESSES: Committee for Purchase From People Who Are Blind or Severely Disabled, Jefferson Plaza 2, Suite 10800, 1421 Jefferson Davis Highway, Arlington, Virginia 22202–3259.

FOR FURTHER INFORMATION OR TO SUBMIT COMMENTS CONTACT: Barry S. Lineback, Telephone: (703) 603–7740, Fax: (703) 603–0655,
or e-mail *CMTEFedReg@AbilityOne.gov.*

SUPPLEMENTARY INFORMATION: This notice is published pursuant to 41 U.S.C 47(a)(2) and 41 CFR 51–2.3. Its purpose is to provide interested persons an opportunity to submit comments on the proposed actions.

Additions

If the Committee approves the proposed additions, the entities of the Federal Government identified in this notice will be required to procure the products and service listed below from nonprofit agencies employing persons who are blind or have other severe disabilities.

Regulatory Flexibility Act Certification

I certify that the following action will not have a significant impact on a substantial number of small entities. The major factors considered for this certification were:

1. If approved, the action will not result in any additional reporting, recordkeeping or other compliance requirements for small entities other than the small organizations that will furnish the products and service to the Government.

2. If approved, the action will result in authorizing small entities to furnish the products and service to the Government.

3. There are no known regulatory alternatives which would accomplish the objectives of the Javits-Wagner-O'Day Act (41 U.S.C. 46–48c) in connection with the products and service proposed for addition to the Procurement List.

Comments on this certification are invited. Commenters should identify the statement(s) underlying the certification on which they are providing additional information.

End of Certification

The following products and service are proposed for addition to Procurement List for production by the nonprofit agencies listed:

Products

Paper, Xerographic Copier and Printer Paper, Neon Colors

NSN: 7530–01–398–2680—8½″ x 11″, Neon Pink.
NSN: 7530–01–398–2681—8½″ x 11″, Neon Blue.
NSN: 7530–01–398–2682—8½″ x 11″, Neon Green.
NPA: Louisiana Association for the Blind, Shreveport, LA.
Contracting Activity: General Services Administration, New York, NY.
Coverage: A-List for the Total Government Requirement as aggregated by the General Services Administration.

NSN: 7530–00–NIB–1004—Notebook, Spiral Bound, 100% PCW, 8½ x 11″, 80 sheets, College Rule, White.
NSN: 7530–00–NIb–1005—Notebook, Spiral Bound, 100% PCW, 8½ x 11″, 100 sheets, College Rule, White.
NSN: 7530–00–NIB–1007—Notebook, Spiral Bound, 100% PCW, 5 x 7½″, 80 sheets, College Rule, White.
NSN: 7530–00–NIB–1008—Notebook, Spiral Bound, 100% PCW, 6 x 9½″, 80 sheets, College Rule, White.
NSN: 7530–00–NIB–1010—Notebook, Spiral Bound, 100% PCW, 6 x 9½″, 150 sheets, College Rule, White.
NSN: 7530–00–NIB–1011—Notebook, Spiral Bound, 100% PCW, 8½ x 11″, 200 sheets, College Rule, White.
NSN: 7530–00–NIB–1018—Notebook, Stenographer's, Biobased Begasse Paper, 6 x 9″, 80 sheets, Gregg Rule, White.
NSN: 7530–00–NIB–1019—Notebook, Spiral Bound, Biobased Begasse Paper, 8 x 10½″, 70 sheets, College Rule, White.
NSN: 7530–00–NIB–1021—Notebook, Spiral Bound, Biobased Begasse Paper, 8 x 11″, 100 sheets, College Rule, White.
NSN: 7530–00–NIB–1022—Notebook, Spiral Bound, Biobased Begasse Paper, 6 x 9½″, 150 sheets, College Rule, White.
NSN: 7530–00–NIB–1024—Notebook, Stenographer's, 100% PCW, 6 x 9″, 60 sheets, Gregg Rule, White.
NSN: 7530–00–NIB–1025—Notebook, Spiral Bound, 100% PCW, 8 x 10½″, 70 sheets, Wide Rule, White.
Coverage: A–List for the Total Government Requirement as aggregated by the General Services Administration.

NSN: 7530–00–NIB–1003—Notebook, Memorandum Book, 100% PCW, 3 x 5″, 60 sheets, Narrow Rule, White.
NSN: 7530–00–NIB–1006—Notebook, Spiral Bound, 100% PCW, 8½ x 11″, 100 sheets, Wide Rule, White.
NSN: 7530–00–NIB–1009—Notebook, Spiral Bound, 100% PCW, 8½ x 11″, 120 sheets, College Rule, White.
NSN: 7530–00–NIB–1020—Notebook, Spiral Bound, Biobased Begasse Paper, 5 x 7½″, 80 sheets, College Rule, White.
NSN: 7530–00–NIB–1023—Notebook, Spiral Bound, Biobased Begasse Paper, 8½ x 11″, 200 sheets, College Rule, White.
Coverage: B-List for the Broad Government Requirement as aggregated by the General Services Administration.

NPA: The Arkansas Lighthouse for the Blind, Little Rock, AR.
Contracting Activity: General Services Administration, New York, NY.
NSN: 7920–00–NIB–0520—Duster Material, Easy Trap, Roll, Large.
NSN: 7920–00–NIB–0521—Duster Material, Easy Trap, Dispenser Box, Large.
NSN: 7920–00–NIB–0503—Duster Material, Easy Trap, Dispenser Box, Standard Size.
NSN: 7920–00–NIB–0502—Duster Material, Easy Trap, Roll, Standard Size.
NPA: New York City Industries for the Blind, Inc., Brooklyn, NY.
Contracting Activity: General Services Administration, Fort Worth, TX.
Coverage: B–List for the Broad Government Requirement as aggregated by the General Services Administration.

NSN: 7530–00–NIB–0982—Monthly Desk Planner, Wire Bound, Non-refillable, Black cover.
NSN: 7530–00–NIB–1026—Weekly Planner Book, Dated, 5″ x 8″, Digital Camouflage.
NSN: 7530–00–NIB–0986—Weekly Desk Planner, Wire Bound, Non-refillable, Black cover.
NSN: 7530–00–NIB–0987—Daily Desk Planner, Wire bound, Non-refillable, Black Cover.
NSN: 7530–00–NIB–1027—Monthly Wall Calendar, Dated, Jan–Dec, 8½″ x 11″.
NSN: 7510–00–NIB–1803—Wall Calendar, Dated, Wire Bound w/Hanger, 12″ x 17″.
NSN: 7510–00–NIB–1804—Wall Calendar, Dated, Wire Bound w/hanger, 15.5″ x 22″.
NPA: The Chicago Lighthouse for People Who Are Blind or Visually Impaired, Chicago, IL.
Contracting Activity: General Services Administration, New York, NY.
Coverage: A-List for the Total Government Requirement as aggregated by the General Services Administration.

NSN: 8465–01–580–1303—Entrenching Tool Carrier, MOLLE Components, OCP.
NPA: Dallas Lighthouse for the Blind, Inc., Dallas, TX.
Contracting Activity: Department of the Army

Research, Development, & Engineering Command, Natick, MA.

Coverage: C-List for 100% of the requirement for initial fielding and Rapid Fielding Initiative of the Department of the Army, as aggregated by the Department of the Army Research, Development, & Engineering Command, Natick, MA.

Service

Service Type/Location: Custodial Service, Ft. Jackson, SC.

NPA: SC Vocations & Individual Advancement, Inc., Greenville, SC.

Contracting Activity: Dept of the Army, W6QM Ft Jackson DOC, Fort Jackson, SC.

Deletion

Regulatory Flexibility Act Certification

I certify that the following action will not have a significant impact on a substantial number of small entities. The major factors considered for this certification were:

1. If approved, the action will not result in additional reporting, recordkeeping or other compliance requirements for small entities.

2. If approved, the action may result in authorizing small entities to furnish the product to the Government.

3. There are no known regulatory alternatives which would accomplish the objectives of the Javits-Wagner-O'Day Act (41 U.S.C. 46–48c) in connection with the product proposed for deletion from the Procurement List.

End of Certification

The following product is proposed for deletion from the Procurement List:

Product

Detergent, Laundry

NSN: 7930–01–506–7081.

NPA: East Texas Lighthouse for the Blind, Tyler, TX.

Contracting Activity: Defense Logistics Agency Troop Support, Philadelphia, PA.

Barry S. Lineback,

Director, Business Operations.

[FR Doc. 2011–15822 Filed 6–23–11; 8:45 am]

BILLING CODE 6353–01–P

CONSUMER PRODUCT SAFETY COMMISSION

Sunshine Act Meeting Notice

TIME AND DATE: Wednesday, June 29, 2011, 10 a.m.–12 Noon.

PLACE: Room 420, Bethesda Towers, 4330 East West Highway, Bethesda, Maryland.

STATUS: Commission Meeting—Open to the Public

MATTERS TO BE CONSIDERED:

1. *Decisional Matter:* Final 15(j) Rule for Drawstrings.

2. *Briefing Matter:* Lead 100 ppm.

A live Web cast of the Meeting can be viewed at *http:www.cpsc.gov/webcast.* For a recorded message containing the latest agenda information, call (301) 504–7948.

CONTACT PERSON FOR MORE INFORMATION: Todd A. Stevenson, Office of the Secretary, U.S. Consumer Product Safety Commission, 4330 East West Highway, Bethesda, MD 20814, (301) 504–7923.

Dated: June 22, 2011.

Todd A. Stevenson,

Secretary.

[FR Doc. 2011–16017 Filed 6–22–11; 4:15 pm]

BILLING CODE 6355–01–P

CONSUMER PRODUCT SAFETY COMMISSION

Sunshine Act Meeting Notice

TIME AND DATE: Wednesday, June 29, 2011; 2 p.m.–3 p.m.

PLACE: Hearing Room 420, Bethesda Towers, 4330 East West Highway, Bethesda, Maryland.

STATUS: Closed to the Public.

MATTER TO BE CONSIDERED:

Compliance Status Report

The Commission staff will brief the Commission on the status of compliance matters.

For a recorded message containing the latest agenda information, call (301) 504–7948.

CONTACT PERSON FOR MORE INFORMATION: Todd A. Stevenson, Office of the Secretary, U.S. Consumer Product Safety Commission, 4330 East West Highway, Bethesda, MD 20814, (301) 504–7923.

Dated: June 22, 2011.

Todd A Stevenson,

Secretary.

[FR Doc. 2011–16002 Filed 6–22–11; 4:15 pm]

BILLING CODE 6355–01–P

CORPORATION FOR NATIONAL AND COMMUNITY SERVICE

Sunshine Act Meeting Notice

The Board of Directors of the Corporation for National and Community Service gives notice of the following meeting:

DATE AND TIME: Wednesday, June 29, 2011, 11:00 a.m.–12:15 p.m.

PLACE: Corporation for National and Community Service, 1201 New York Avenue, NW., Suite 8312, Washington, DC 20525 (Please go to 10th floor reception area for escort).

CALL-IN INFORMATION: This meeting is available to the public through the following toll-free call-in number: 888–989–5160 conference call access code number 3131856. Any interested member of the public may call this number and listen to the meeting. Callers can expect to incur charges for calls they initiate over wireless lines, and the Corporation will not refund any incurred charges. Callers will incur no charge for calls they initiate over land-line connections to the toll-free telephone number. Replays are generally available one hour after a call ends. The toll-free phone number for the replay is 800–873–2094 conference call access code number 8336. The end replay date is July 6, 2011 10:59 PM (CT).

STATUS: Open.

MATTERS TO BE CONSIDERED:

I. Chair's Opening Comments.

II. Consideration of Previous Meeting's Minutes.

III. CEO Report.

IV. Committee Reports:

a. Oversight, Governance and Audit Committee.

b. External Relations Committee.

c. Program, Budget and Evaluation Committee.

V. Public Comments.

Members of the public who would like to comment on the business of the Board may do so in writing or in person. Individuals may submit written comments to *esamose@cns.gov* subject line: JUNE 2011 CNCS Board Meeting by 12 noon on Monday June 27th. Individuals attending the meeting in person who would like to comment will be asked to sign-in upon arrival. Comments are requested to be limited to 2 minutes.

REASONABLE ACCOMMODATIONS: The Corporation for National and Community Service provides reasonable accommodations to individuals with disabilities where appropriate. Anyone who needs an interpreter or other accommodation should notify Ida Green at *igreen@cns.gov* or 202–606–6861 by 5 p.m., June 24, 2011.

CONTACT PERSON FOR MORE INFORMATION: Emily Samose, Strategic Advisor for Board Engagement, Corporation for National and Community Service, 1201 New York Avenue NW., Washington, DC 20525. *Phone:* (202) 606–7564. *Fax:* (202) 606–3460. *TTY:* (800) 833–3722. *E-mail: esamose@cns.gov.*

Dated: June 21, 2011.

Valerie Green,

General Counsel.

[FR Doc. 2011–15986 Filed 6–22–11; 11:15 am]

BILLING CODE 6050–$$–P

DEPARTMENT OF DEFENSE

Office of the Secretary

[Transmittal Nos. 10–03]

36(b)(1) Arms Sales Notification

AGENCY: Department of Defense, Defense Security Cooperation Agency.

ACTION: Notice.

SUMMARY: The Department of Defense is publishing the unclassified text of a section 36(b)(1) arms sales notification. This is published to fulfill the requirements of section 155 of Public Law 104–164 dated July 21, 1996.

FOR FURTHER INFORMATION CONTACT: Mr. John Unglesbee, DSCA/DBO/CFM, (703) 601–6026.

The following is a copy of a letter to the Speaker of the House of Representatives, Transmittal 10–03 with attached transmittal, policy justification, and Sensitivity of Technology.

Dated: June 16, 2011.

Aaron Siegel,

Alternate OSD Federal Register Liaison Officer, Department of Defense.

BILLING CODE 5001–06–P

DEFENSE SECURITY COOPERATION AGENCY
201 12TH STREET SOUTH, STE 203
ARLINGTON, VA 22202-5408

JUN 10 2011

The Honorable John A. Boehner
Speaker
U.S. House of Representatives
Washington, DC 20515

Dear Mr. Speaker:

Pursuant to the reporting requirements of Section 36(b)(1) of the Arms Export Control Act, as amended, we are forwarding herewith Transmittal No. 10-03, concerning the Department of the Air Force's proposed Letter(s) of Offer and Acceptance to Saudi Arabia for defense articles and services estimated to cost $355 million. After this letter is delivered to your office, we plan to issue a press statement to notify the public of this proposed sale.

Sincerely,

William E. Landay III
Vice Admiral, USN
Director

Enclosures:
1. Transmittal
2. Policy Justification
3. Sensitivity of Technology
4. Regional Balance (Classified Document Provided Under Separate Cover)

Transmittal No. 10-03

Notice of Proposed Issuance of Letter of Offer
Pursuant to Section 36(b)(1)
of the Arms Export Control Act, as amended

(i) Prospective Purchaser: Saudi Arabia

(ii) Total Estimated Value:

Major Defense Equipment*	$235 million
Other	$120 million
TOTAL	$355 million

(iii) Description and Quantity or Quantities of Articles or Services under Consideration for Purchase: 404 CBU-105D/B Sensor Fuzed Weapons, 28 CBU-105 Integration test assets, containers, spare and repair parts, support and test equipment, personnel training and training equipment, publications and technical documentation, U.S. Government and contractor engineering, technical, and logistics support services, and other related elements of logistics support.

(iv) Military Department: Air Force (QBH)

(v) Prior Related Cases, if any: None

(vi) Sales Commission, Fee, etc., Paid, Offered, or Agreed to be Paid: None

(vii) Sensitivity of Technology Contained in the Defense Article or Defense Services Proposed to be Sold: None

(viii) Date Report Delivered to Congress: JUN 10 2011

* as defined in Section 47(6) of the Arms Export Control Act.

POLICY JUSTIFICATION

Saudi Arabia – CBU-105 Sensor Fuzed Weapons

The Government of Saudi Arabia has requested a possible sale of 404 CBU-105D/B Sensor Fuzed Weapons, 28 CBU-105 Integration test assets, containers, spare and repair parts, support and test equipment, personnel training and training equipment, publications and technical documentation, U.S. Government and contractor engineering, technical, and logistics support services, and other related elements of logistics support. The estimated cost is $355 million.

This proposed sale will contribute to the foreign policy goals and national security objectives of the United States by meeting the legitimate security and defense needs of a partner nation, which has been and continues to be an important force for peace, political stability, and economic progress in the Middle East.

Saudi Arabia intends to use Sensor Fused Weapons to modernize its armed forces and enhance its capability to defeat a wide range of defensive threats, to include: strongpoints, bunkers, and dug-in facilities; armored and semi-armored vehicles; personnel; and certain maritime threats. Additionally, the precision nature and extremely low dud rate of these munitions will reduce fratricide incidents and increase effectiveness. The Royal Saudi Air Force will be able to develop and enhance its standardization and operational capability and its interoperability with the USAF, Gulf Cooperation Council member states, and other coalition air forces. Saudi Arabia will have no difficulty absorbing these munitions into its armed forces.

The proposed sale of this equipment and support will not alter the basic military balance in the region.

After arming, the CBU-105D/B Sensor Fuzed Weapon will not result in more than one percent unexploded ordnance across the range of intended operational environments. The agreement applicable to the transfer or the CBU-105D/B and the CBU-105 integration test assets will contain an agreement of the Government of Saudi Arabia that the cluster munitions and cluster munitions technology will be used only against clearly defined military targets and will not be used where civilians are known to be present or in areas normally inhabited by civilians.

The prime contractor will be Textron Systems Corporation of Wilmington, MA. There are no known offset agreements proposed in connection with this potential sale.

Implementation of this proposed sale will require annual trips to Saudi Arabia involving up to two U.S. Government and three contractor representatives for technical reviews/support, and program management for a period of approximately two years.

There will be no adverse impact on U.S. defense readiness as a result of this proposed sale.

Transmittal No. 10-03

Notice of Proposed Issuance of Letter of Offer
Pursuant to Section 36(b)(1)
of the Arms Export Control Act

Annex
Item No. vii

(vii) Sensitivity of Technology:

1. The CBU-105D/B Sensor Fused Weapon (SFW) is an advanced 1,000-pound class cluster bomb munition containing sensor fused sub-munitions that are designed to attack and defeat a wide range of moving or stationary land and maritime threats with minimal collateral damage. The SFW is currently the only combat proven, clean battle weapon that meets U.S. law regarding cluster munition safety standards. In addition to added safety, no other munition is as versatile and effective against so many different target types. Major components and technical data are classified up to Secret. Anti-tamper security measures are incorporated into the munition to prevent exploitation. The munition will be delivered in its Unclassified All-Up-Round configuration.

2. If a technologically advanced adversary were to obtain knowledge of the specific hardware and software elements, the information could be used to develop countermeasures which might reduce weapon system effectiveness or be used in the development of a system with similar or advanced capabilities.

[FR Doc. 2011–15770 Filed 6–23–11; 8:45 am]
BILLING CODE 5001–06–C

DEPARTMENT OF DEFENSE

Office of the Secretary

[Transmittal Nos. 10–77]

36(b)(1) Arms Sales Notification

AGENCY: Department of Defense, Defense Security Cooperation Agency.

ACTION: Notice.

SUMMARY: The Department of Defense is publishing the unclassified text of a section 36(b)(1) arms sales notification. This is published to fulfill the requirements of section 155 of Public Law 104–164 dated July 21, 1996.

FOR FURTHER INFORMATION CONTACT: Mr. John Unglesbee, DSCA/DBO/CFM, (703) 601–6026. The following is a copy of a letter to the Speaker of the House of Representatives, Transmittal 10–77 with attached transmittal and policy justification.

Dated: June 16, 2011.

Aaron Siegel,

Alternate OSD Federal Register Liaison Officer, Department of Defense.

BILLING CODE 5001–06–P

DEFENSE SECURITY COOPERATION AGENCY
201 12TH STREET SOUTH, STE 203
ARLINGTON, VA 22202-5408

JUN 10 2011

The Honorable John A. Boehner
Speaker
U.S. House of Representatives
Washington, DC 20515

Dear Mr. Speaker:

Pursuant to the reporting requirements of Section 36(b)(1) of the Arms Export Control Act, as amended, we are forwarding herewith Transmittal No. 10-77, concerning the Department of the Army's proposed Letter(s) of Offer and Acceptance to Kingdom of Saudi Arabia for defense articles and services estimated to cost $350 million. After this letter is delivered to your office, we plan to issue a press statement to notify the public of this proposed sale.

Sincerely,

William E. Landay III
Vice Admiral, USN
Director

Enclosures:
1. Transmittal
2. Policy Justification
3. Regional Balance (Classified Document Provided under Separate Cover)

Transmittal No. 10-77

Notice of Proposed Issuance of Letter of Offer
Pursuant to Section 36(b)(1)
of the Arms Export Control Act (U)

(i) Prospective Purchaser: Kingdom of Saudi Arabia

(ii) Total Estimated Value:

Major Defense Equipment*	$300 million
Other	$ 50 million
TOTAL	$350 million

(iii) Description and Quantity or Quantities of Articles or Services under Consideration for Purchase: 25 LAV-25 series Light Armored Vehicles, 8 LAV Assault Guns, 8 LAV Anti-Tank Vehicles, 6 LAV Mortars, 2 LAV Recovery Vehicles, 24 LAV Command and Control Vehicles, 3 LAV Personnel Carriers, 3 LAV Ammo Carriers, 1 LAV Engineer Vehicle, 2 LAV Ambulances, AN/VRC-90E and AN/VRC-92E Export Single Channel Ground and Airborne Radio Systems (SINCGARS), battery chargers, spare and repair parts, publications and technical documentation, personnel training and training equipment, U.S. Government and contractor engineering and technical support services, and other related elements of logistical and program support.

(iv) Military Department: Army (ZAC, Amd #43)

(v) Prior Related Cases, if any: Numerous cases dating back to 1975

(vi) Sales Commission, Fee, etc., Paid, Offered, or Agreed to be Paid: None

(vii) Sensitivity of Technology Contained in the Defense Article or Defense Services Proposed to be Sold: None

(viii) Date Report Delivered to Congress: JUN 10 2011

* as defined in Section 47(6) of the Arms Export Control Act.

POLICY JUSTIFICATION

Kingdom of Saudi Arabia – Light Armored Vehicles and Related Support

The Government of the Kingdom of Saudi Arabia has requested a possible sale of 25 LAV-25 series Light Armored Vehicles, 8 LAV Assault Guns, 8 LAV Anti-Tank Vehicles, 6 LAV Mortars, 2 LAV Recovery Vehicles, 24 LAV Command and Control Vehicles, 3 LAV Personnel Carriers, 3 LAV Ammo Carriers, 1 LAV Engineer Vehicle, 2 LAV Ambulances, AN/VRC 90E and AN/VRC-92E Export Single Channel Ground and Airborne Radio Systems (SINCGARS), battery chargers, spare and repair parts, publications and technical documentation, personnel training and training equipment, U.S. Government and contractor engineering and technical support services, and other related elements of logistical and program support. The estimated cost is $350 million.

This proposed sale will contribute to the foreign policy and national security of the United States by helping to improve the security of a friendly country which has been, and continues to be, an important force for political stability and economic progress in the Middle East.

The proposed sale will improve the Saudi Arabian National Guard's ability to effectively conduct security and counter-terrorism operations, and would serve to make a key strategic partner in regional contingency operations more capable of defeating those who would threaten regional stability and less reliant on the deployment of U.S. forces to maintain or restore stability in the Middle East. Saudi Arabia, which already has Light Armored Vehicles in its inventory, will have no difficulty absorbing these additional vehicles into its armed forces.

The proposed sale of this service will not alter the basic military balance in the region.

The prime contractors will be ITT Aerospace/Communications in Fort Wayne, Indiana; Harris Corporation in Rochester, New York; General Dynamics Land Systems in London, Ontario, Canada; and Raytheon Corporation in Tucson, Arizona. There are no known offset agreements proposed in connection with this potential sale.

Implementation of this sale will not require the assignment of any additional U.S. Government or contractor representatives to the Kingdom of Saudi Arabia.
There will be no adverse impact on U.S. defense readiness as a result of this proposed sale.

[FR Doc. 2011–15772 Filed 6–23–11; 8:45 am]
BILLING CODE 5001–06–C

DEPARTMENT OF DEFENSE

Office of the Secretary

[Transmittal Nos. 10–68]

36(b)(1) Arms Sales Notification

AGENCY: Department of Defense, Defense Security Cooperation Agency.

ACTION: Notice.

SUMMARY: The Department of Defense is publishing the unclassified text of a section 36(b)(1) arms sales notification. This is published to fulfill the requirements of section 155 of Public Law 104–164 dated July 21, 1996.

FOR FURTHER INFORMATION CONTACT: Mr. John Unglesbee, DSCA/DBO/CFM, (703) 601–6026.

The following is a copy of a letter to the Speaker of the House of Representatives, Transmittal 10–68 with attached transmittal, policy justification, and Sensitivity of Technology.

Dated: June 16, 2011.

Aaron Siegel,

Alternate OSD Federal Register Liaison Officer, Department of Defense.

BILLING CODE 5001–06–P

DEFENSE SECURITY COOPERATION AGENCY
201 12TH STREET SOUTH, STE 203
ARLINGTON, VA 22202-5408

JUN 10 2011

The Honorable John A. Boehner
Speaker
U.S. House of Representatives
Washington, DC 20515

Dear Mr. Speaker:

Pursuant to the reporting requirements of Section 36(b)(1) of the Arms Export Control Act, as amended, we are forwarding herewith Transmittal No. 10-68, concerning the Department of the Army's proposed Letter(s) of Offer and Acceptance to Saudi Arabia for defense articles and services estimated to cost $263 million. After this letter is delivered to your office, we plan to issue a press statement to notify the public of this proposed sale.

Sincerely,

William E. Landay III
Vice Admiral, USN
Director

Enclosures:
1. Transmittal
2. Policy Justification
3. Sensitivity of Technology
4. Regional Balance (Classified Document Provided under Separate Cover)

Transmittal No. 10-68

Notice of Proposed Issuance of Letter of Offer
Pursuant to Section 36(b)(1)
of the Arms Export Control Act

(i) Prospective Purchaser: Kingdom of Saudi Arabia

(ii) Total Estimated Value:

Major Defense Equipment*	$163million
Other	$100 million
TOTAL	$263 million

(iii) Description and Quantity or Quantities of Articles or Services under Consideration for Purchase: 23 LAV-25mm Light Armored Vehicles (LAV), 14 LAV Personnel Carriers, 4 LAV Ambulances, 3 LAV Recovery Vehicles, 9 LAV Command and Control Vehicles, 20 LAV Anti-Tank (TOW) Vehicles, 155 AN/PVS-7B Night Vision Goggles, M257 Smoke Grenade Launchers, Improved Thermal Sight Systems (ITSS) and Modified Improved TOW Acquisition Systems (MITAS), Defense Advanced Global Positioning System Receivers, AN/USQ-159 Camouflage Net Sets, M2A2 Aiming Circles, compasses, plotting boards, reeling machines, sight bore optical sets, telescopes, switchboards, driver vision enhancers, spare and repair parts, support and test equipment, personnel training and training equipment, publications and technical documentation, U.S. Government and contractor engineering, technical and logistics support services, and other related elements of logistics support.

(iv) Military Department: Army (VTD, Amendment #1)

(v) Prior Related Cases, if any: None

(vi) Sales Commission, Fee, etc., Paid, Offered, or Agreed to be Paid: None

(vii) Sensitivity of Technology Contained in the Defense Article or Defense Services Proposed to be Sold: See Attached Annex

(viii) Date Report Delivered to Congress: JUN 10 2011

* as defined in Section 47(6) of the Arms Export Control Act.

POLICY JUSTIFICATION

Saudi Arabia – Light Armored Vehicles

The Government of Saudi Arabia has requested a possible sale of 23 LAV-25mm Light Armored Vehicles (LAV), 14 LAV Personnel Carriers, 4 LAV Ambulances, 3 LAV Recovery Vehicles, 9 LAV Command and Control Vehicles, 20 LAV Anti-Tank (TOW) Vehicles, 155 AN/PVS-7B Night Vision Goggles, M257 Smoke Grenade Launchers, Improved Thermal Sight Systems (ITSS) and Modified Improved TOW Acquisition Systems (MITAS), Defense Advanced Global Positioning System Receivers, AN/USQ-159 Camouflage Net Sets, M2A2 Aiming Circles, compasses, plotting boards, reeling machines, sight bore optical sets, telescopes, switchboards, driver vision enhancers, spare and repair parts, support and test equipment, personnel training and training equipment, publications and technical documentation, U.S. Government and contractor engineering, technical and logistics support services, and other related elements of logistics support. The estimated cost is $263 million.

This proposed sale will contribute to the foreign policy and national security of the United States by helping to improve the security of a friendly country which has been and continues to be an important force for political stability and economic progress in the Middle East.

The proposed sale of Light Armored Vehicles will provide a highly mobile, light combat vehicle capability enabling Saudi Arabia to rapidly identify, engage, and defeat perimeter security threats and readily employ counter- and anti-terrorism measures. The vehicles will enhance the stability and security operations for boundaries and territorial areas encompassing the Arabian Peninsula. Saudi Arabia will have no difficulty absorbing these LAVs into its armed forces.

The proposed sale of this equipment and support will not alter the basic military balance in the region.

The prime contractors will be General Dynamics Land Systems in Sterling Heights, Michigan and the Raytheon Corporation in Tucson, Arizona. There are no known offset agreements proposed in connection with this potential sale.

Implementation of this proposed sale may require the assignment of approximately five additional U.S. Government and ten contractor representatives through at least 2014.

There will be no adverse impact on U.S. defense readiness as a result of this proposed sale.

Transmittal No. 10-68

Notice of Proposed Issuance of Letter of Offer
Pursuant to Section 36(b)(1)
of the Arms Export Control Act (U)

Annex
Item No. vii

(vii) Sensitivity of Technology:

1. The Light Armored Vehicle (LAV) and all associated documentation are Unclassified. Sensitive technologies, to include the Improved Thermal Sight System (ITSS) and Modified Improved TOW Acquisition System (MITAS), are integral to the LAV-25 and LAV Anti-Tank (TOW) mission role variants. The AN/VAS-5 Drivers Vision Enhancer is integral to all mission role variants.

2. The MITAS is a thermal sight system consisting of a target acquisition and fire control system that gives the LAV Anti-Tank (TOW) Vehicle crews a substantial advantage over the potential threat. The MITAS provides the crew with the ability to effectively aim, fire, and track the TOW missiles in adverse battlefield conditions while the weapon system is stationary. The hardware itself is Unclassified. The engineering design and manufacturing data associated with the detector and infrared optics are considered sensitive. The technical data package is Unclassified with the exception of the specifications for target acquisition range (Confidential), nuclear hardening (Confidential), and laser hardening (Secret).

3. The AN/VAS-5 Drivers Vision Enhancer (DVE) consists of a sensor module, display control module, and a vehicle-unique integration bracket. The sensor module consists of a long wavelength infrared thermal imager based on a 240/320 uncooled array and a 30/40 degree objective lens assembly. The sensor module's uncooled infrared technology eliminates the need for a cryogenic cooler, substantially reducing costs while increasing system reliability. The display control module is a 10.4 inch diagonal liquid crystal display with integral operator controls. The modularity of the sensor and display control module allows DVE to be easily integrated into many combat and tactical wheeled vehicles.

4. If a technologically advanced adversary were to obtain knowledge of the specific hardware and software elements, the information could be used to develop countermeasures which might reduce weapon system effectiveness or be used in the development of a system with similar or advanced capabilities.

[FR Doc. 2011–15771 Filed 6–23–11; 8:45 am]
BILLING CODE 5001–06–C

DEPARTMENT OF DEFENSE

Office of the Secretary

[Docket ID: DOD–2011–OS–0068]

Privacy Act of 1974; Systems of Records

AGENCY: Defense Logistics Agency, DoD.

ACTION: Notice To Amend a System of Records.

SUMMARY: The Defense Logistics Agency proposes to amend a system of records notice in its existing inventory of records systems subject to the Privacy Act of 1974, (5 U.S.C. 552a), as amended.

DATES: This proposed action will be effective without further notice on July 25, 2011 unless comments are received which result in a contrary determination.

ADDRESSES: You may submit comments, identified by docket number and/Regulatory Information Number (RIN) and title, by any of the following methods:

* *Federal Rulemaking Portal: http://www.regulations.gov.* Follow the instructions for submitting comments.

* *Mail:* Federal Docket Management System Office, 1160 Defense Pentagon, Washington, DC 20301–1160.

Instructions: All submissions received must include the agency name and docket number or Regulatory Information Number (RIN) for this **Federal Register** document. The general policy for comments and other submissions from members of the public

is to make these submissions available for public viewing on the Internet at *http://www.regulations.gov* as they are received without change, including any personal identifiers or contact information.

FOR FURTHER INFORMATION CONTACT: Ms. Jody Sinkler, Privacy Act Officer, Headquarters, Defense Logistics Agency, ATTN: DGA, 8725 John J. Kingman Road, Stop 16443, Fort Belvoir, VA 22060–6221 or by phone at (703) 767–5045.

SUPPLEMENTARY INFORMATION: The Defense Logistics Agency systems of records notices subject to the Privacy Act of 1974, (5 U.S.C. 552a), as amended, have been published in the **Federal Register** and are available from the address above. The proposed system reports, as required by 5 U.S.C. 552a (r), of the Privacy Act of 1974, as amended, were submitted on February 25, 2011, to the House Committee on Oversight and Government Reform, the Senate Committee on Homeland Security and Governmental Affairs, and the Office of Management and Budget (OMB) pursuant to paragraph 4c of Appendix I to OMB Circular No. A–130, 'Federal Agency Responsibilities for Maintaining Records About Individuals,' dated February 8, 1996 (February 20, 1996, 61 FR 6427).

Dated: June 17, 2011.

Aaron Siegel,

Alternate OSD Federal Register Liaison Officer, Department of Defense.

S190.10

SYSTEM NAME:

DLA Hometown News Releases (April 30, 2009, 74 FR 19939).

CHANGES:

* * * * *

SYSTEM LOCATION:

Delete entry and replace with ''Defense Logistics Agency Headquarters, Public Affairs Office, 8725 John J. Kingman Road, Stop 2533, Fort Belvoir, VA 22060–6221, and the Public Affairs Offices of the Defense Logistics Agency (DLA) Primary Level Field Activities. Official mailing addresses are published as an appendix to DLA's compilation of systems of records notices.''

* * * * *

CATEGORIES OF RECORDS IN THE SYSTEM:

Delete ''last five digits of Social Security Number'' from entry.

AUTHORITY FOR MAINTENANCE OF THE SYSTEM:

Delete entry and replace with ''5 U.S.C. 301, Departmental Regulations and 10 U.S.C. 136, Under Secretary of Defense for Personnel and Readiness.''

* * * * *

SYSTEM MANAGER(S) AND ADDRESS:

Delete entry and replace with ''Director, DLA Public Affairs Office, Defense Logistics Agency Headquarters, 8725 John J. Kingman Road, Stop 2533, Fort Belvoir, VA 22060–6221, and the Heads of the Public Affairs Offices within each DLA Primary Level Field Activity. Official mailing addresses are published as an appendix to DLA's compilation of systems of records notices.''

NOTIFICATION PROCEDURE:

Delete entry and replace with ''Individuals seeking to determine whether this system of records contains information about themselves should address written inquiries to the DLA FOIA/Privacy Act Office, Headquarters, Defense Logistics Agency, ATTN: DGA, 8725 John J. Kingman Road, Suite 1644, Fort Belvoir, VA 22060–6221.

Written inquiry must contain the subject individual's full name, current address, and telephone number.''

RECORD ACCESS PROCEDURES:

Delete entry and replace with ''Individuals seeking access to information about themselves contained in this system of records should address written inquiries to the DLA FOIA/Privacy Act Office, Headquarters, Defense Logistics Agency, ATTN: DGA, 8725 John J. Kingman Road, Suite 1644, Fort Belvoir, VA 22060–6221.

Written inquiry must contain the subject individual's full name, current address, and telephone number.''

CONTESTING RECORD PROCEDURES:

Delete entry and replace with ''The DLA rules for accessing records, for contesting contents and appealing initial agency determinations are contained in 32 CFR Part 323, or may be obtained from the DLA FOIA/Privacy Act Office, Headquarters, Defense Logistics Agency, ATTN: DGA, 8725 John J. Kingman Road, Suite 1644, Fort Belvoir, VA 22060–6221.''

RECORD SOURCE CATEGORIES:

Delete entry and replace with ''Information is obtained from the subject individual.''

* * * * *

S190.19

SYSTEM NAME:

DLA Hometown News Releases.

SYSTEM LOCATION:

Defense Logistics Agency Headquarters, Public Affairs Office, 8725 John J. Kingman Road, Stop 2533, Fort Belvoir, VA 22060–6221, and the Public Affairs Offices of the Defense Logistics Agency (DLA) Primary Level Field Activities. Official mailing addresses are published as an appendix to DLA's compilation of systems of records notices.

CATEGORIES OF INDIVIDUALS COVERED BY THE SYSTEM:

DLA military and civilian employees who request a Hometown News Release.

CATEGORIES OF RECORDS IN THE SYSTEM:

Information is submitted electronically using the Joint Hometown News Service Defense Media Activity Web page; and includes name, local address, branch of service, status, rank, pay grade, gender, newsworthy event, marital status, names and addresses of relatives (parents, stepparents, guardians, aunts/uncles, grandparents, and adult siblings), present unit of assignment, job title, years of military service, education data, and photographs.

AUTHORITY FOR MAINTENANCE OF THE SYSTEM:

5 U.S.C. 301, Departmental Regulations and 10 U.S.C. 136, Under Secretary of Defense for Personnel and Readiness.

PURPOSE(S):

Information is collected and maintained for the purpose of distributing information on activities and accomplishments of DLA military and civilian personnel to hometown newspapers and broadcast stations throughout the United States using the Army and Air Force Hometown News Service. Release of this information is done with the individual's full cooperation and consent.

ROUTINE USES OF RECORDS MAINTAINED IN THE SYSTEM, INCLUDING CATEGORIES OF USERS AND THE PURPOSES OF SUCH USES:

In addition to those disclosures generally permitted under 5 U.S.C. 552a(b) of the Privacy Act of 1974, these records contained therein may specifically be disclosed outside the DoD as a routine use pursuant to 5 U.S.C. 552a(b)(3) as follows:

Information is released to hometown newspapers and broadcast stations throughout the United States using the Army and Air Force Hometown News Service for the purpose of showcasing the activities and accomplishments of the DLA military or civilian member.

The DoD ''Blanket Routine Uses'' apply to this system of records.

POLICIES AND PRACTICES FOR STORING, RETRIEVING, ACCESSING, RETAINING, AND DISPOSING OF RECORDS IN THE SYSTEM:

STORAGE:

Records are maintained on electronic storage media.

RETRIEVABILITY:

Records are retrieved by individual's name.

SAFEGUARDS:

Records are maintained in a controlled facility. Physical entry is restricted by the use of locks, guards, and is accessible only to authorized personnel. Access to computerized data is restricted by passwords, which are changed periodically. Data sent by DLA Public Affairs Officers to the Army and Air Force Hometown News Service is via e-mail to an authorized DoD address. Access to records is limited to person(s) responsible for servicing the record in performance of their official duties and who are properly screened and cleared for need-to-know.

RETENTION AND DISPOSAL:

Records are destroyed after 90 days.

SYSTEM MANAGER(S) AND ADDRESS:

Director, DLA Public Affairs Office, Defense Logistics Agency Headquarters, 8725 John J. Kingman Road, Stop 2533, Fort Belvoir, VA 22060–6221, and the Heads of the Public Affairs Offices within each DLA Primary Level Field Activity. Official mailing addresses are published as an appendix to DLA's compilation of systems of records notices.

NOTIFICATION PROCEDURE:

Individuals seeking to determine whether this system of records contains information about themselves should address written inquiries to the DLA FOIA/Privacy Act Office, Headquarters, Defense Logistics Agency, ATTN: DGA, 8725 John J. Kingman Road, Suite 1644, Fort Belvoir, VA 22060–6221.

Written inquiry must contain the subject individual's full name, current address, and telephone number.

RECORD ACCESS PROCEDURES:

Individuals seeking access to information about themselves contained in this system of records should address written inquiries to the DLA FOIA/Privacy Act Office, Headquarters, Defense Logistics Agency, ATTN: DGA, 8725 John J. Kingman Road, Suite 1644, Fort Belvoir, VA 22060–6221.

Written inquiry must contain the subject individual's full name, current address, and telephone number.

CONTESTING RECORD PROCEDURES:

The DLA rules for accessing records, for contesting contents and appealing initial agency determinations are contained in 32 CFR part 323, or may be obtained from the DLA FOIA/Privacy Act Office, Headquarters, Defense Logistics Agency, ATTN: DGA, 8725 John J. Kingman Road, Suite 1644, Fort Belvoir, VA 22060–6221.

RECORD SOURCE CATEGORIES:

Information is obtained from the subject individual.

EXEMPTIONS CLAIMED FOR THE SYSTEM:

None.

[FR Doc. 2011–15775 Filed 6–23–11; 8:45 am]

BILLING CODE 5001–06–P

DEPARTMENT OF DEFENSE

Department of the Army; Corps of Engineers

Board on Coastal Engineering Research

AGENCY: Department of the Army, DoD.

ACTION: Notice of meeting.

SUMMARY: In accordance with Section 10(a)(2) of the Federal Advisory Committee Act (Pub. L. 92–463), announcement is made of the following committee meeting:

Name of Committee: Board on Coastal Engineering Research.

Date of Meeting: July 26–28, 2011.

Place: Crowne Jewel Ballroom, Sheraton At The Falls, 300 Third Street, Niagara Falls, NY 14303.

Time: 8 a.m. to 3:15 p.m. (July 26, 2011); 8 a.m. to 5:30 p.m. (July 27, 2011); 7:30 a.m. to 11:30 p.m. (July 28, 2011).

FOR FURTHER INFORMATION CONTACT: Inquiries and notice of intent to attend the meeting may be addressed to COL Kevin J. Wilson, Executive Secretary, U.S. Army Engineer Research and Development Center, Waterways Experiment Station, 3909 Halls Ferry Road, Vicksburg, MS 39180–6199.

SUPPLEMENTARY INFORMATION: The Board provides broad policy guidance and review of plans and fund requirements for the conduct of research and development of research projects in consonance with the needs of the coastal engineering field and the objectives of the Chief of Engineers.

Proposed Agenda: The goal of the meeting is to review the coastal engineering challenges within the Great Lakes region, as well as nationally, and identify the research that is needed to help the Districts meet these challenges. Panel presentations dealing with Coastal and Navigation Structures and Asset Management on Tuesday, July 26, will include an Introduction; Asset Management Processes for Coastal Navigation Structures; Coastal Navigation Structures Data Management and Visualization; Navigation Structure Condition Assessment in the Great Lakes: Federal, State, Local, and Private Perspectives; Developments in Asset Management Systems; Future Navigation Needs; Systems Approach to Risk and Lifecycle Management of Coastal Navigation Infrastructure; and Research and Development Needs and Plans. There will be an optional field trip boat Tuesday evening.

On Wednesday morning, July 27, 2011, panel presentations dealing with Regional Sediment Management (RSM) will include an Introduction; Future RSM Challenges in the Corps; Long-term Sediment Budget to Assess Harbor Impacts at St. Joseph, MI; Nearshore Placement of Sand and Fine Grain Dredged Material: LRD Experience and Current R&D to Foster RSM Approaches; Engineering Research Needs for the Great Lakes; Managing Great Lakes Watersheds and Non-Point Source Sediment Loads; and National Coastal Mapping Program. Panel presentations continuing Wednesday afternoon will include Regional Monitoring Performance and Techniques, Regional Modeling and Analysis, and RSM Future Direction and R&D Needs. A briefing from the American Shore and Beach Preservation Association will be Wednesday afternoon.

The Board will meet in Executive Session to discuss ongoing initiatives and actions on Thursday morning, July 28.

These meetings are open to the public. Participation by the public is scheduled for 4:30 p.m. on Wednesday, July 27.

The entire meeting and field trip boat tour are open to the public, but since seating capacity is limited, advance notice of attendance is required. Oral participation by public attendees is encouraged during the time scheduled on the agenda; written statements may be submitted prior to the meeting or up to 30 days after the meeting.

Kevin J. Wilson,

Colonel, Corps of Engineers, Executive Secretary.

[FR Doc. 2011–15901 Filed 6–23–11; 8:45 am]

BILLING CODE 3720–58–P

DEPARTMENT OF EDUCATION

Notice of Submission for OMB Review

AGENCY: Department of Education.

ACTION: Comment request.

SUMMARY: The Director, Information Collection Clearance Division, Privacy, Information and Records Management Services, Office of Management, invites comments on the submission for OMB review as required by the Paperwork Reduction Act of 1995 (Pub. L. 104–13).

DATES: Interested persons are invited to submit comments on or before July 25, 2011.

ADDRESSES: Written comments should be addressed to the Office of Information and Regulatory Affairs, Attention: Education Desk Officer, Office of Management and Budget, 725 17th Street, NW., Room 10222, New Executive Office Building, Washington, DC 20503, be faxed to (202) 395–5806 or e-mailed to *oira_submission@omb.eop.gov* with a cc: to *ICDocketMgr@ed.gov*. Please note that written comments received in response to this notice will be considered public records.

SUPPLEMENTARY INFORMATION: Section 3506 of the Paperwork Reduction Act of 1995 (44 U.S.C. Chapter 35) requires that the Office of Management and Budget (OMB) provide interested Federal agencies and the public an early opportunity to comment on information collection requests. The OMB is particularly interested in comments which: (1) Evaluate whether the proposed collection of information is necessary for the proper performance of the functions of the agency, including whether the information will have practical utility; (2) Evaluate the accuracy of the agency's estimate of the burden of the proposed collection of information, including the validity of the methodology and assumptions used; (3) Enhance the quality, utility, and clarity of the information to be collected; and (4) Minimize the burden of the collection of information on those who are to respond, including through the use of appropriate automated, electronic, mechanical, or other technological collection techniques or other forms of information technology.

Dated: June 20, 2011.

Darrin A. King,

Director, Information Collection Clearance Division, Privacy, Information and Records Management Services, Office of Management.

Office of Vocational and Adult Education

Type of Review: Revision.

Title of Collection: Measures and Methods for the National Reporting System for Adult Education.

OMB Control Number: 1830–0027.

Agency Form Number(s): N/A.

Frequency of Responses: Annually.

Affected Public: State, Local, or Tribal Government, State Educational Agencies or Local Educational Agencies.

Total Estimated Number of Annual Responses: 57.

Total Estimated Annual Burden Hours: 18,050.

Abstract: The Office of Vocational and Adult Education requests a revision to its data collection requirements for four measures—entered employment, retained employment, entry into postsecondary education and attainment of a secondary credential—by changing the population to which these measures apply. Currently, states report on the relevant outcome for students who set goals related to the measure. Goal setting is being replaced with automatic cohort designation related to a student's employment status, having a secondary credential and taking General Educational Development tests. Approval is also sought for collecting new data on teacher experience and certification and student's years of schooling.

Copies of the information collection submission for OMB review may be accessed from the RegInfo.gov Web site at *http://www.reginfo.gov/public/do/PRAMain* or from the Department's Web site at *http://edicsweb.ed.gov,* by selecting the ''Browse Pending Collections'' link and by clicking on link number 4523. When you access the information collection, click on ''Download Attachments '' to view. Written requests for information should be addressed to U.S. Department of Education, 400 Maryland Avenue, SW., LBJ, Washington, DC 20202–4537. Requests may also be electronically mailed to the Internet address *ICDocketMgr@ed.gov* or faxed to 202–401–0920. Please specify the complete title of the information collection and OMB Control Number when making your request.

Individuals who use a telecommunications device for the deaf (TDD) may call the Federal Information Relay Service (FIRS) at 1–800–877–8339.

[FR Doc. 2011–15797 Filed 6–23–11; 8:45 am]

BILLING CODE 4000–01–P

DEPARTMENT OF EDUCATION

Applications for New Awards; Rehabilitation Engineering Research Centers (RERCs)

AGENCY: Office of Special Education and Rehabilitative Services, Department of Education.

ACTION: Notice.

Overview Information: National Institute on Disability and Rehabilitation Research (NIDRR)—Disability and Rehabilitation Research Projects and Centers Program—Rehabilitation Engineering Research Centers (RERCs).

Notice inviting applications for new awards for fiscal year (FY) 2011.

Catalog of Federal Domestic Assistance (CFDA) Numbers: 84.133E–1 and 84.133E–3.

DATES: *Applications Available:* June 24, 2011.

Date of Pre-Application Meeting: July 15, 2011.

Deadline for Transmittal of Applications: August 15, 2011.

Full Text of Announcement

I. Funding Opportunity Description

Purpose of Program: The purpose of the Disability and Rehabilitation Research Projects and Centers Program is to plan and conduct research, demonstration projects, training, and related activities, including international activities; to develop methods, procedures, and rehabilitation technology that maximize the full inclusion and integration into society, employment, independent living, family support, and economic and social self-sufficiency of individuals with disabilities, especially individuals with the most severe disabilities; and to improve the effectiveness of services authorized under the Rehabilitation Act of 1973, as amended (Rehabilitation Act).

Rehabilitation Engineering Research Centers Program (RERCs)

The purpose of the RERC program is to improve the effectiveness of services authorized under the Rehabilitation Act by conducting advanced engineering research on and development of innovative technologies that are designed to solve particular rehabilitation problems, or to remove environmental barriers. RERCs also demonstrate and evaluate such technologies, facilitate service delivery system changes, stimulate the production and distribution of new technologies and equipment in the private sector, and provide training opportunities.

Priorities: These priorities are from the notice of final priorities for this program, published elsewhere in this issue of the **Federal Register**.

Absolute Priorities: For FY 2011 and any subsequent year in which we make awards from the list of unfunded applicants from these competitions, these priorities are absolute priorities. Under 34 CFR 75.105(c)(3) we consider

only applications that meet one of the following priorities.

These priorities are:

84.133E–1—RERC on Low Vision and Blindness.

84.133E–3—RERC on Wireless Technologies.

Note: The full text of these priorities is included in the notice of final priorities, published elsewhere in this issue of the **Federal Register** and in the application package for these competitions.

Program Authority: 29 U.S.C. 762(g) and 764(b)(3).

Applicable Regulations: (a) The Education Department General Administrative Regulations (EDGAR) in 34 CFR Parts 74, 75, 77, 80, 81, 82, 84, 85, 86, and 97. (b) The regulations for this program in 34 CFR Part 350. (c) The notice of final priorities for the Disability and Rehabilitation Research Projects and Centers program, published elsewhere in this issue of the **Federal Register**.

Note: The regulations in 34 CFR Part 86 apply to institutions of higher education only.

II. Award Information

Type of Award: Discretionary grants.

Estimated Available Funds: $1,900,000.

Contingent upon the availability of funds and the quality of applications, we may make additional awards in FY 2012 from the list of unfunded applicants from these competitions.

Maximum Award: We will reject any application that proposes a budget exceeding $950,000 for a single budget period of 12 months. The Assistant Secretary for Special Education and Rehabilitative Services may change the maximum amount through a notice published in the **Federal Register**.

Estimated Number of Awards: 1 for the RERC on Low Vision and Blindness competition (CFDA No. 84.133E–1) and 1 for the RERC on Wireless Technologies competition (CFDA No. 84.133E–3).

Note: The Department is not bound by any estimates in this notice.

Project Period: Up to 60 months.

III. Eligibility Information

1. *Eligible Applicants:* States; public or private agencies, including for-profit agencies; public or private organizations, including for-profit organizations; institutions of higher education; and Indian tribes and tribal organizations.

2. *Cost Sharing or Matching:* The competitions announced in this notice do not require cost sharing or matching.

IV. Application and Submission Information

1. *Address to Request Application Package:* You can obtain an application package via the Internet or from the Education Publications Center (ED Pubs). To obtain a copy via the Internet, use the following address: *http://www.ed.gov/fund/grant/apply/grantapps/index.html.*

To obtain a copy from ED Pubs, write, fax, or call the following: ED Pubs, U.S. Department of Education, P.O. Box 22207, Alexandria, VA 22304. Telephone, toll free: 1–877–433–7827. FAX: (703) 605–6794. If you use a telecommunications device for the deaf (TDD), call, toll free: 1–877–576–7734.

You can contact ED Pubs at its Web site, also: *http://www.EDPubs.gov* or at its e-mail address: *edpubs@inet.ed.gov.*

If you request an application from ED Pubs, be sure to identify this program as follows: CFDA numbers 84.133E–1 and 84.133E–3.

Individuals with disabilities can obtain a copy of the application package in an accessible format (*e.g.,* braille, large print, audiotape, or computer diskette) by contacting the person or team listed under *Accessible Format* in section VIII of this notice.

2. *Content and Form of Application Submission:* Requirements concerning the content of an application, together with the forms you must submit, are in the application package for this program.

Page Limit: The application narrative (Part III of the application) is where you, the applicant, address the selection criteria that reviewers use to evaluate your application. We recommend that you limit the application narrative (Part III) to the equivalent of no more than 125 pages, using the following standards:

- A ''page'' is 8.5″ × 11″, on one side only, with 1″ margins at the top, bottom, and both sides.
- Double space (no more than three lines per vertical inch) all text in the application narrative, including titles, headings, footnotes, quotations, references, and captions, as well as all text in charts, tables, figures, and graphs.
- Use a font that is either 12 point or larger or no smaller than 10 pitch (characters per inch).
- Use one of the following fonts: Times New Roman, Courier, Courier New, or Arial.

The recommended page limit does not apply to Part I, the cover sheet; Part II, the budget section, including the narrative budget justification; Part IV, the assurances and certifications; or the one-page abstract, the resumes, the bibliography, or the letters of support. However, the page limit does apply to all of the application narrative section (Part III).

The application package will provide instructions for completing all components to be included in the application. Each application must include a cover sheet (Standard Form 424); budget requirements (ED Form 524) and narrative budget justification; other required forms; an abstract, Human Subjects narrative, Part III project narrative; resumes of staff; and other related materials, if applicable.

3. *Submission Dates and Times:*

Applications Available: June 24, 2011.

Date of Pre-Application Meeting: Interested parties are invited to participate in a pre-application meeting and to receive information and technical assistance through individual consultation with NIDRR staff. The pre-application meeting will be held July 15, 2011. Interested parties may participate in this meeting by conference call with NIDRR staff from the Office of Special Education and Rehabilitative Services between 1 p.m. and 3 p.m., Washington, DC time. NIDRR staff also will be available from 3:30 p.m. to 4:30 p.m., Washington, DC time, on the same day, by telephone, to provide information and technical assistance through individual consultation. For further information or to make arrangements to participate in the meeting via conference call or for an individual consultation, contact either Lynn Medley or Marlene Spencer as follows: Lynn Medley, U.S. Department of Education, 400 Maryland Avenue, SW., Room 5140, Potomac Center Plaza (PCP), Washington, DC 20202–2700. Telephone: (202) 245–7338 or by e-mail: *Lynn.Medley@ed.gov.* Marlene Spencer, U.S. Department of Education, 400 Maryland Avenue, SW., Room 5133, PCP, Washington, DC 20202–2700. Telephone: (202) 245–7532 or by e-mail: *Marlene.Spencer@ed.gov.*

Deadline for Transmittal of Applications: August 15, 2011.

Applications for grants under the competitions announced in this notice must be submitted electronically using the Grants.gov Apply site (Grants.gov). For information (including dates and times) about how to submit your application electronically, or in paper format by mail or hand delivery if you qualify for an exception to the electronic submission requirement, please refer to section IV.7. *Other Submission Requirements* of this notice.

We do not consider an application that does not comply with the deadline requirements.

Individuals with disabilities who need an accommodation or auxiliary aid in connection with the application process should contact the person listed under **FOR FURTHER INFORMATION CONTACT** in section VII of this notice. If the Department provides an accommodation or auxiliary aid to an individual with a disability in connection with the application process, the individual's application remains subject to all other requirements and limitations in this notice.

4. *Intergovernmental Review:* This program is not subject to Executive Order 12372 and the regulations in 34 CFR part 79.

5. *Funding Restrictions:* We reference regulations outlining funding restrictions in the *Applicable Regulations* section in this notice.

6. *Data Universal Numbering System Number, Taxpayer Identification Number, and Central Contractor Registry:* To do business with the Department of Education, you must—

a. Have a Data Universal Numbering System (DUNS) number and a Taxpayer Identification Number (TIN);

b. Register both your DUNS number and TIN with the Central Contractor Registry (CCR), the Government's primary registrant database;

c. Provide your DUNS number and TIN on your application; and

d. Maintain an active CCR registration with current information while your application is under review by the Department and, if you are awarded a grant, during the project period.

You can obtain a DUNS number from Dun and Bradstreet. A DUNS number can be created within one business day.

If you are a corporate entity, agency, institution, or organization, you can obtain a TIN from the Internal Revenue Service. If you are an individual, you can obtain a TIN from the Internal Revenue Service or the Social Security Administration. If you need a new TIN, please allow 2–5 weeks for your TIN to become active.

The CCR registration process may take five or more business days to complete. If you are currently registered with the CCR, you may not need to make any changes. However, please make certain that the TIN associated with your DUNS number is correct. Also note that you will need to update your CCR registration on an annual basis. This may take three or more business days to complete.

In addition, if you are submitting your application via Grants.gov, you must (1) Be designated by your organization as an Authorized Organization Representative (AOR); and (2) register yourself with Grants.gov as an AOR. Details on these steps are outlined in the Grants.gov 3-Step Registration Guide (*see http://www.grants.gov/section910/Grants.govRegistrationBrochure.pdf*).

7. *Other Submission Requirements:* Applications for grants under this program must be submitted electronically unless you qualify for an exception to this requirement in accordance with the instructions in this section.

a. *Electronic Submission of Applications.*

Applications for grants under the Disability and Rehabilitation Research Projects and Centers program, CFDA number 84.133E–1 or 84.133E–3, must be submitted electronically using the Governmentwide Grants.gov Apply site at *http://www.Grants.gov.* Through this site, you will be able to download a copy of the application package, complete it offline, and then upload and submit your application. You may not e-mail an electronic copy of a grant application to us.

We will reject your application if you submit it in paper format unless, as described elsewhere in this section, you qualify for one of the exceptions to the electronic submission requirement *and* submit, no later than two weeks before the application deadline date, a written statement to the Department that you qualify for one of these exceptions. Further information regarding calculation of the date that is two weeks before the application deadline date is provided later in this section under *Exception to Electronic Submission Requirement.*

You may access the electronic grant applications for the RERC on Low Vision and Blindness and the RERC on Wireless Technologies competitions at *http://www.Grants.gov.* You must search for the downloadable application package for this program by the CFDA number. Do not include the CFDA number's alpha suffix in your search (*e.g.,* search for 84.133, not 84.133E).

Please note the following:

- When you enter the Grants.gov site, you will find information about submitting an application electronically through the site, as well as the hours of operation.
- Applications received by Grants.gov are date and time stamped. Your application must be fully uploaded and submitted and must be date and time stamped by the Grants.gov system no later than 4:30:00 p.m., Washington, DC time, on the application deadline date. Except as otherwise noted in this section, we will not accept your application if it is received—that is, date and time stamped by the Grants.gov system—after 4:30:00 p.m., Washington, DC time, on the application deadline date. We do not consider an application that does not comply with the deadline requirements. When we retrieve your application from Grants.gov, we will notify you if we are rejecting your application because it was date and time stamped by the Grants.gov system after 4:30:00 p.m., Washington, DC time, on the application deadline date.
- The amount of time it can take to upload an application will vary depending on a variety of factors, including the size of the application and the speed of your Internet connection. Therefore, we strongly recommend that you do not wait until the application deadline date to begin the submission process through Grants.gov.
- You should review and follow the Education Submission Procedures for submitting an application through Grants.gov that are included in the application package for these competitions to ensure that you submit your application in a timely manner to the Grants.gov system. You can also find the Education Submission Procedures pertaining to Grants.gov under News and Events on the Department's G5 system home page at *http://www.G5.gov.*
- You will not receive additional point value because you submit your application in electronic format, nor will we penalize you if you qualify for an exception to the electronic submission requirement, as described elsewhere in this section, and submit your application in paper format.
- You must submit all documents electronically, including all information you typically provide on the following forms: The Application for Federal Assistance (SF 424), the Department of Education Supplemental Information for SF 424, Budget Information—Non-Construction Programs (ED 524), and all necessary assurances and certifications.
- You must upload any narrative sections and all other attachments to your application as files in a .PDF (Portable Document) format only. If you upload a file type other than a .PDF or submit a password-protected file, we will not review that material.
- Your electronic application must comply with any page-limit requirements described in this notice.
- After you electronically submit your application, you will receive from Grants.gov an automatic notification of receipt that contains a Grants.gov tracking number. (This notification indicates receipt by Grants.gov only, not receipt by the Department.) The Department then will retrieve your application from Grants.gov and send a second notification to you by e-mail.

This second notification indicates that the Department has received your application and has assigned your application a PR/Award number (an ED-specified identifying number unique to your application).

• We may request that you provide us original signatures on forms at a later date.

Application Deadline Date Extension in Case of Technical Issues with the Grants.gov System: If you are experiencing problems submitting your application through Grants.gov, please contact the Grants.gov Support Desk, toll free, at 1–800–518–4726. You must obtain a Grants.gov Support Desk Case Number and must keep a record of it.

If you are prevented from electronically submitting your application on the application deadline date because of technical problems with the Grants.gov system, we will grant you an extension until 4:30:00 p.m., Washington, DC time, the following business day to enable you to transmit your application electronically or by hand delivery. You also may mail your application by following the mailing instructions described elsewhere in this notice.

If you submit an application after 4:30:00 p.m., Washington, DC time, on the application deadline date, please contact the person listed under **FOR FURTHER INFORMATION CONTACT** in section VII of this notice and provide an explanation of the technical problem you experienced with Grants.gov, along with the Grants.gov Support Desk Case Number. We will accept your application if we can confirm that a technical problem occurred with the Grants.gov system and that that problem affected your ability to submit your application by 4:30:00 p.m., Washington, DC time, on the application deadline date. The Department will contact you after a determination is made on whether your application will be accepted.

Note: The extensions to which we refer in this section apply only to the unavailability of, or technical problems with, the Grants.gov system. We will not grant you an extension if you failed to fully register to submit your application to Grants.gov before the application deadline date and time or if the technical problem you experienced is unrelated to the Grants.gov system.

Exception to Electronic Submission Requirement: You qualify for an exception to the electronic submission requirement, and may submit your application in paper format, if you are unable to submit an application through the Grants.gov system because—

• You do not have access to the Internet; or

• You do not have the capacity to upload large documents to the Grants.gov system; *and*

• No later than two weeks before the application deadline date (14 calendar days or, if the fourteenth calendar day before the application deadline date falls on a Federal holiday, the next business day following the Federal holiday), you mail or fax a written statement to the Department, explaining which of the two grounds for an exception prevent you from using the Internet to submit your application.

If you mail your written statement to the Department, it must be postmarked no later than two weeks before the application deadline date. If you fax your written statement to the Department, we must receive the faxed statement no later than two weeks before the application deadline date.

Address and mail or fax your statement to: Marlene Spencer, U.S. Department of Education, 400 Maryland Avenue, SW., room 5133, PCP, Washington, DC 20202–2700. FAX: (202) 245–7323.

Your paper application must be submitted in accordance with the mail or hand delivery instructions described in this notice.

b. *Submission of Paper Applications by Mail.*

If you qualify for an exception to the electronic submission requirement, you may mail (through the U.S. Postal Service or a commercial carrier) your application to the Department. You must mail the original and two copies of your application, on or before the application deadline date, to the Department at the following address: U.S. Department of Education, Application Control Center, Attention: (CFDA Number 84.133E–1 or 84.133E–3), LBJ Basement Level 1, 400 Maryland Avenue, SW., Washington, DC 20202–4260.

You must show proof of mailing consisting of one of the following:

(1) A legibly dated U.S. Postal Service postmark.

(2) A legible mail receipt with the date of mailing stamped by the U.S. Postal Service.

(3) A dated shipping label, invoice, or receipt from a commercial carrier.

(4) Any other proof of mailing acceptable to the Secretary of the U.S. Department of Education.

If you mail your application through the U.S. Postal Service, we do not accept either of the following as proof of mailing:

(1) A private metered postmark.

(2) A mail receipt that is not dated by the U.S. Postal Service.

If your application is postmarked after the application deadline date, we will not consider your application.

Note: The U.S. Postal Service does not uniformly provide a dated postmark. Before relying on this method, you should check with your local post office.

c. *Submission of Paper Applications by Hand Delivery.*

If you qualify for an exception to the electronic submission requirement, you (or a courier service) may deliver your paper application to the Department by hand. You must deliver the original and two copies of your application by hand, on or before the application deadline date, to the Department at the following address: U.S. Department of Education, Application Control Center, Attention: (CFDA Number 84.133E–1 or 84.133E–3), 550 12th Street, SW., Room 7041, Potomac Center Plaza, Washington, DC 20202–4260.

The Application Control Center accepts hand deliveries daily between 8:00 a.m. and 4:30:00 p.m., Washington, DC time, except Saturdays, Sundays, and Federal holidays. *Note for Mail or Hand Delivery of Paper Applications:* If you mail or hand deliver your application to the Department—

(1) You must indicate on the envelope and—if not provided by the Department—in Item 11 of the SF 424 the CFDA number, including suffix letter, if any, of the program under which you are submitting your application; and

(2) The Application Control Center will mail to you a notification of receipt of your grant application. If you do not receive this notification within 15 business days from the application deadline date, you should call the U.S. Department of Education Application Control Center at (202) 245–6288.

V. Application Review Information

1. *Selection Criteria:* The selection criteria for this program are from 34 CFR 350.54 and are listed in the application package.

2. *Review and Selection Process:* We remind potential applicants that in reviewing applications in any discretionary grant program, the Secretary may consider, under 34 CFR 75.217(d)(3), the past performance of the applicant in carrying out a previous award, such as the applicant's use of funds, achievement of project objectives, and compliance with grant conditions. The Secretary may also consider whether the applicant failed to submit a timely performance report or submitted a report of unacceptable quality.

In addition, in making a competitive grant award, the Secretary also requires

various assurances including those applicable to Federal civil rights laws that prohibit discrimination in programs or activities receiving Federal financial assistance from the Department of Education (34 CFR 100.4, 104.5, 106.4, 108.8, and 110.23).

3. *Special Conditions:* Under 34 CFR 74.14 and 80.12, the Secretary may impose special conditions on a grant if the applicant or grantee is not financially stable; has a history of unsatisfactory performance; has a financial or other management system that does not meet the standards in 34 CFR parts 74 or 80, as applicable; has not fulfilled the conditions of a prior grant; or is otherwise not responsible.

VI. Award Administration Information

1. *Award Notices:* If your application is successful, we notify your U.S. Representative and U.S. Senators and send you a Grant Award Notification (GAN). We may notify you informally, also.

If your application is not evaluated or not selected for funding, we notify you.

2. *Administrative and National Policy Requirements:* We identify administrative and national policy requirements in the application package and reference these and other requirements in the *Applicable Regulations* section of this notice.

We reference the regulations outlining the terms and conditions of an award in the *Applicable Regulations* section of this notice and include these and other specific conditions in the GAN. The GAN also incorporates your approved application as part of your binding commitments under the grant.

3. *Reporting:* (a) If you apply for a grant under this program, you must ensure that you have in place the necessary processes and systems to comply with the reporting requirements in 2 CFR Part 170 should you receive funding under the program. This does not apply if you have an exception under 2 CFR 170.110(b).

(b) At the end of your project period, you must submit a final performance report, including financial information, as directed by the Secretary. If you receive a multi-year award, you must submit an annual performance report that provides the most current performance and financial expenditure information as directed by the Secretary under 34 CFR 75.118. The Secretary may also require more frequent performance reports under 34 CFR 75.720(c). For specific requirements on reporting, please go to *http://www.ed.gov/fund/grant/apply/appforms/appforms.html.*

4. *Performance Measures:* To evaluate the overall success of its research program, NIDRR assesses the quality of its funded projects through a review of grantee performance and products. Each year, NIDRR examines a portion of its grantees to determine:

- The percentage of NIDRR-supported fellows, post-doctoral trainees, and doctoral students who publish results of NIDRR-sponsored research in refereed journals.
- The number of accomplishments (*e.g.,* new or improved tools, methods, discoveries, standards, interventions, programs, or devices) developed or tested with NIDRR funding that have been judged by expert panels to be of high quality and to advance the field.
- The average number of publications per award based on NIDRR-funded research and development activities in refereed journals.
- The percentage of new NIDRR grants that assess the effectiveness of interventions, programs, and devices using rigorous methods.
- The number of new or improved NIDRR-funded assistive and universally designed technologies, products, and devices transferred to industry for potential commercialization.

NIDRR uses information submitted by grantees as part of their Annual Performance Reports (APRs) for these reviews.

Department of Education program performance reports, which include information on NIDRR programs, are available on the Department's Web site: *http://www.ed.gov/about/offices/list/opepd/sas/index.html.*

5. *Continuation Awards:* In making a continuation award, the Secretary may consider, under 34 CFR 75.253, the extent to which a grantee has made ''substantial progress toward meeting the objectives in its approved application.'' This consideration includes the review of a grantee's progress in meeting the targets and projected outcomes in its approved application, and whether the grantee has expended funds in a manner that is consistent with its approved application and budget. In making a continuation grant, the Secretary also considers whether the grantee is operating in compliance with the assurances in its approved application, including those applicable to Federal civil rights laws that prohibit discrimination in programs or activities receiving Federal financial assistance from the Department (34 CFR 100.4, 104.5, 106.4, 108.8, and 110.23).

VII. Agency Contacts

FOR FURTHER INFORMATION CONTACT: Either Lynn Medley or Marlene Spencer as follows: Lynn Medley, U.S. Department of Education, 400 Maryland Avenue, SW., room 5140, PCP, Washington, DC 20202–2700. Telephone: (202) 245–7338 or by e-mail: *lynn.medley@ed.gov.* Marlene Spencer, U.S. Department of Education, 400 Maryland Avenue, SW., room 5133, PCP, Washington, DC 20202–2700. Telephone: (202) 245–7532 or by e-mail: *Marlene.Spencer@ed.gov.*

If you use a TDD call the Federal Relay Service (FRS), toll free, at 1–800–877–8339.

VIII. Other Information

Accessible Format: Individuals with disabilities can obtain this document and a copy of the application package in an accessible format (*e.g.,* braille, large print, audiotape, or computer diskette) by contacting the Grants and Contracts Services Team, U.S. Department of Education, 400 Maryland Avenue, SW., room 5075, PCP, Washington, DC 20202–2550. Telephone: (202) 245–7363. If you use a TDD call FRS, toll-free, at 1–800–877–8339.

Electronic Access to This Document: The official version of this document is the document published in the **Federal Register**. Free Internet access to the official edition of the **Federal Register** and the Code of Federal Regulations is available via the Federal Digital System at: *http://www.gpo.gov/fdsys.* At this site you can view this document, as well as all other documents of this Department published in the **Federal Register**, in text or Adobe Portable Document Format (PDF). To use PDF you must have Adobe Acrobat Reader, which is available free at the site.

You may also access documents of the Department published in the **Federal Register** by using the article search feature at: *http://www.federalregister.gov.* Specifically, through the advanced search feature at this site, you can limit your search to documents published by the Department.

Dated: June 21, 2011.

Alexa Posny,

Assistant Secretary for Special Education and Rehabilitative Services.

[FR Doc. 2011–15933 Filed 6–23–11; 8:45 am]

BILLING CODE 4000–01–P

DEPARTMENT OF EDUCATION

[CFDA Numbers 84.133E–1 and 84.133E–3]

Final Priorities; Disability and Rehabilitation Research Projects and Centers Program

AGENCY: Office of Special Education and Rehabilitative Services, Department of Education.

ACTION: Notice of final priorities for two Rehabilitation Engineering Research Centers (RERCs).

SUMMARY: The Assistant Secretary for Special Education and Rehabilitative Services announces two priorities for RERCs: Low Vision and Blindness (Priority 1) and Wireless Technologies (Priority 2). The Assistant Secretary may use these priorities for competitions in fiscal year (FY) 2011 and later years. We take this action to focus research attention on areas of national need. We intend to use these priorities to improve rehabilitation services and outcomes for individuals with disabilities.

DATES: *Effective Date:* These priorities are effective July 25, 2011.

FOR FURTHER INFORMATION CONTACT: Marlene Spencer, U.S. Department of Education, 400 Maryland Avenue, SW., room 5133, Potomac Center Plaza (PCP), Washington, DC 20202–2700. *Telephone:* (202) 245–7532 or by *e-mail: marlene.spencer@ed.gov.*

If you use a telecommunications device for the deaf (TDD), call the Federal Relay Service, toll free, at 1–800–877–8339.

SUPPLEMENTARY INFORMATION: This notice of final priorities (NFP) is in concert with National Institute on Disability and Rehabilitation Research's (NIDRR's) currently approved Long-Range Plan (Plan). The Plan, which was published in the **Federal Register** on February 15, 2006 (71 FR 8165), can be accessed on the Internet at the following site: *http://www.ed.gov/about/offices/list/osers/nidrr/policy.html.*

Through the implementation of the Plan, NIDRR seeks to: (1) Improve the quality and utility of disability and rehabilitation research; (2) foster an exchange of expertise, information, and training to facilitate the advancement of knowledge and understanding of the unique needs of traditionally underserved populations; (3) determine the best strategies and programs to improve rehabilitation outcomes for underserved populations; (4) identify research gaps; (5) identify mechanisms of integrating research and practice; and (6) disseminate findings.

This notice announces two priorities that NIDRR intends to use for RERC competitions in FY 2011 and possibly later years. However, nothing precludes NIDRR from publishing additional priorities, if needed. Furthermore, NIDRR is under no obligation to make an award for these priorities. The decision to make an award will be based on the quality of applications received and available funding.

Purpose of Program: The purpose of the Disability and Rehabilitation Research Projects and Centers Program is to plan and conduct research, demonstration projects, training, and related activities, including international activities; to develop methods, procedures, and rehabilitation technology that maximize the full inclusion and integration into society, employment, independent living, family support, and economic and social self-sufficiency of individuals with disabilities, especially individuals with the most severe disabilities; and to improve the effectiveness of services authorized under the Rehabilitation Act of 1973, as amended (Rehabilitation Act).

Rehabilitation Engineering Research Centers Program (RERCs)

The purpose of the RERC program is to improve the effectiveness of services authorized under the Rehabilitation Act by conducting advanced engineering research on and development of innovative technologies that are designed to solve particular rehabilitation problems, or to remove environmental barriers. RERCs also demonstrate and evaluate such technologies, facilitate service delivery system changes, stimulate the production and distribution of new technologies and equipment in the private sector, and provide training opportunities.

General Requirements of RERCs

RERCs carry out research or demonstration activities in support of the Rehabilitation Act by—

- Developing and disseminating innovative methods of applying advanced technology, scientific achievement, and psychological and social knowledge to solve rehabilitation problems and to remove environmental barriers through studying and evaluating new or emerging technologies, products, or environments and their effectiveness and benefits; or
- Demonstrating and disseminating: (a) Innovative models for the delivery of cost-effective rehabilitation technology services to rural and urban areas; and (b) other scientific research to assist in meeting the employment and independent living needs of individuals with severe disabilities; and
- Facilitating service delivery systems change through: (a) The development, evaluation, and dissemination of innovative, consumer-responsive, and individual- and family-centered models for the delivery to both rural and urban areas of innovative cost-effective rehabilitation technology services; and (b) other scientific research to assist in meeting the employment and independent living needs of and addressing the barriers confronted by individuals with disabilities, including individuals with severe disabilities.

Each RERC must be operated by, or in collaboration with, one or more institutions of higher education or one or more nonprofit organizations.

Each RERC must provide training opportunities, in conjunction with institutions of higher education or nonprofit organizations, to assist individuals, including individuals with disabilities, to become rehabilitation technology researchers and practitioners.

Each RERC must emphasize the principles of universal design in its product research and development. Universal design is the design of products and environments to be usable by all people, to the greatest extent possible, without the need for adaptation or specialized design (North Carolina State University, 1997, The Center for Universal Design, *http://www.design.ncsu.edu/cud/about_ud/udprinciplestext.htm*).

Additional information on the RERC program can be found at: *http://www.ed.gov/rschstat/research/pubs/index.html.*

Program Authority: 29 U.S.C. 762(g) and 764(b)(3).

Applicable Program Regulations: 34 CFR part 350.

We published a notice of proposed priorities (NPP) for NIDRR's Disability and Rehabilitation Research Projects and Centers Program in the **Federal Register** on March 29, 2011 (76 FR 17396). That notice contained background information and our reasons for proposing the particular priorities.

Public Comment: In response to our invitation in the NPP, five parties submitted comments on the proposed priorities.

Generally, we do not address technical and other minor changes. In addition, we do not address general comments that raised concerns not directly related to the proposed priorities.

Analysis of Comments and Changes: An analysis of the comments and of any

changes in the priorities since publication of the NPP follows.

Low Vision and Blindness

Comment: One commenter recommended that the *Low Vision and Blindness* priority should emphasize a model of assistive technology development in which mainstream, mass-market products are designed with accessibility features to meet the needs of individuals with low vision and blindness. The commenter noted that this model is more likely to lead to low-cost products, relative to the model in which specialized products are designed for the relatively small market of individuals with low vision and blindness.

Discussion: NIDRR agrees that the development of mass-marketed products with accessibility features can lead to lower costs for consumers who are blind or have low vision. The *Low Vision and Blindness* priority provides the flexibility for applicants to propose projects that use this kind of mass-market development model. However, NIDRR recognizes that a model that focuses on developing other more specialized or customized technologies and products may be needed in order to develop useful and appropriate technologies and products for individuals who are blind or have low vision. For this reason, we also provide applicants with the flexibility to use models that focus on these technologies and products.

Changes: None.

Comment: One commenter suggested that NIDRR require the RERC to work directly with companies that are in a position to manufacture and sell products in order to expedite the process of transferring the RERC's work to consumers in the market.

Discussion: NIDRR agrees that collaborations with companies and industry partners can expedite the process of technology transfer. The RERC priority requirements, which apply to both the *Low Vision and Blindness* and *Wireless Technologies* priorities, include a requirement to collaborate with relevant industry partners to improve research capacity. This collaboration may also expedite the transfer of the RERC's work to consumers in the market. In an effort to increase transfer of RERC-developed technologies to the marketplace, NIDRR also requires RERCs to develop a technology transfer plan in the first year of the grant. Therefore, NIDRR believes that an additional requirement to collaborate with relevant industry partners is unnecessary. The current requirements achieve the commenter's aim of expediting the technology transfer process.

Changes: None.

Comment: One commenter suggested that the *Low Vision and Blindness* priority include more explicit language about the RERC's role as a clearinghouse for information on technologies for individuals who are blind or have low vision.

Discussion: NIDRR agrees that the RERC should have responsibility for providing information about technologies for individuals who are blind or have low vision. Paragraph (4) of the priority requires each RERC to communicate with a wide variety of stakeholders about trends and evolving product concepts related to its designated topic. Paragraph (5) of the priority also requires each RERC to provide technical assistance to stakeholders on relevant policies, guidelines, and standards related to its designated topic. Finally, the RERC priority requirements, which apply to both the *Low Vision and Blindness* and *Wireless Technologies* priorities, include a requirement that the RERC disseminate its research results to relevant stakeholders. For these reasons, we believe that this priority provides sufficiently for the RERC's role in transmitting information on technologies for individuals who are blind or have low vision, and, therefore, decline to add more explicit language as requested.

Changes: None.

Comment: One commenter suggested that the *Low Vision and Blindness* priority should contain more explicit language about the RERC's requirement to collaborate with developers of technology from outside the RERC, researchers, and students in the field.

Discussion: The requirements that are applicable to both RERC priorities include a requirement to collaborate with relevant industry partners and relevant NIDRR-funded research projects. While the priority does not require collaboration with developers of technology or with students in the field, nothing in the priority precludes such collaborations. NIDRR does not have a sufficient basis for requiring all applicants to propose to collaborate with developers from outside of the RERC or with students in the field. We believe individual projects are well positioned to determine entities with whom to collaborate, and this priority provides them with adequate flexibility to do so.

Changes: None.

Comment: One commenter expressed concern about language in the *Low Vision and Blindness* priority that refers to improved vision assessment for the population of individuals who are at risk for experiencing low vision and blindness. This commenter stated that such language would result in having the RERC focus on prevention of blindness among at-risk individuals, instead of on assessments and technologies to meet the needs of individuals who already experience vision loss.

Discussion: The priority includes requirements for research and development that will improve access to graphical information, signage, and travel information and devices, as well as development of technologies to promote the participation of individuals with low vision and blindness in science, technology, engineering, and mathematics (STEM) education. In order to facilitate early intervention and better outcomes, NIDRR requires the RERC to focus on improved vision assessment technologies to improve the field's ability to detect and serve emerging populations of individuals who are blind or who have low vision. While applicants may develop improved assessment technologies that would facilitate prevention of low vision and blindness among at-risk populations, the RERC must focus its resources on the multiple requirements related to research on and development of technologies to promote the independence of individuals who are blind or who have low vision.

Changes: None.

Comment: One commenter recommended that NIDRR revise the *Low Vision and Blindness* priority to require the RERC to investigate and address the employment needs of older individuals with low vision and blindness.

Discussion: Nothing in the priority precludes applicants from proposing a project or projects that emphasize employment for older individuals with low vision and blindness. However, NIDRR does not have a sufficient basis for requiring all applicants to focus on this specific topic or population. NIDRR does not want to limit applicants' ability to propose projects that address other important topics, outcomes, or populations by requiring research and development to support employment of older individuals with low vision and blindness.

Changes: None.

Comment: One commenter recommended that we revise the *Low Vision and Blindness* priority to require the RERC to develop its research and development plans based upon the input of the diverse population of individuals with vision loss and the

organizations that represent them. This commenter also recommended that NIDRR require active partnerships between the RERC and organizations that represent individuals living with vision loss.

Discussion: The RERC priority requirements, which apply to both the *Low Vision and Blindness* and *Wireless Technologies* priorities, include a requirement that each RERC develop and implement a plan for including individuals with disabilities or their representatives in all phases of its activities, including research, development, training, dissemination, and evaluation. In developing such a plan, applicants may determine the timing and extent of involvement of individuals with disabilities in their activities. Nothing in the priority precludes applicants from proposing to develop active partnerships with organizations that represent individuals who are living with vision loss. However, NIDRR does not have a sufficient basis for requiring all applicants to do so. NIDRR does not want to limit applicants' ability to propose alternative mechanisms for including individuals with disabilities or their representatives in the RERC's work.

Changes: None.

Comment: In reference to the requirement in the priority that the RERC must research and develop technologies to promote the participation of individuals with low vision and blindness in STEM education, one commenter expressed concern that the RERC would focus its work exclusively in this area and produce solutions with limited relevance outside of the classroom. The commenter recommended that we revise the priority to ensure that the RERC's activities are aimed at developing technologies for use in the home, at school, and in the community by individuals with vision loss of all ages.

Discussion: NIDRR agrees that the RERC's work should address the needs of individuals with low vision and blindness of all ages and in all settings. The *Low Vision and Blindness* priority states that the RERC must research and develop technologies that will improve the assessment of low vision and blindness and promote independence for individuals with low vision and blindness of all ages. Within the broad requirements of the priority, applicants are free to focus their research and development towards finding solutions that benefit subpopulations in settings, inside and outside of the classroom, where they see the greatest need.

Changes: None.

Comment: One commenter expressed support for the requirement in the *Low Vision and Blindness* priority that the grantee must research and develop technologies that will improve the assessment of low vision and blindness and promote independence for individuals with low vision and blindness of all ages, including those who are deaf-blind and those with multiple disabilities. This commenter noted, however, that individuals with low vision and blindness who have other disabling conditions cannot be easily categorized according to their disabling conditions, and that their technology needs are largely driven by their functional abilities. The commenter suggested that NIDRR revise the priority to require research and development that accounts for variations in functional abilities among individuals with low vision and blindness and other disabling conditions.

Discussion: NIDRR does not agree that the priority should be revised to be more prescriptive in terms of the conceptual and methodological strategies used by the RERC, as suggested by the commenter. NIDRR strongly believes that applicants should have the flexibility to propose a wide variety of research and development approaches that meet the requirements of the priority. The peer review process will determine the merits of each proposal.

Changes: None.

Wireless Technologies

Comment: One commenter suggested that NIDRR revise the *Wireless Technologies* priority to require applicants to focus on the research and development of low-cost or no-cost options for access to wireless technologies by people with disabilities. Specifically, the commenter recommended that the priority require the development of access solutions that are built into wireless technologies or that allow third parties to provide low-cost access solutions for those technologies.

Discussion: Nothing in the priority precludes applicants from proposing research and development projects that focus on low- or no-cost access solutions for wireless technologies, including built-in or third-party solutions. However, NIDRR does not have a sufficient basis for requiring all applicants to do so. NIDRR does not want to limit applicants' ability to propose other important research and development approaches and projects by requiring all applicants to focus their work on built-in or third-party accessibility solutions.

Changes: None.

Comment: One commenter suggested that the *Wireless Technologies* priority should be broad enough to include research to develop accessibility solutions for consumer electronics that employ wireless technologies to communicate with other devices.

Discussion: Nothing in the *Wireless Technologies* priority precludes applicants from proposing projects to develop accessibility solutions for consumer electronics that employ wireless technologies to communicate with other devices. However, NIDRR does not have a sufficient basis for requiring all applicants to do so. NIDRR does not want to limit applicants' ability to propose other important research and development projects by requiring all applicants to focus their work in this area.

Changes: None.

Final Priorities

Priority 1—Low Vision and Blindness.

The Assistant Secretary for Special Education and Rehabilitative Services establishes a priority for a Rehabilitation Engineering Research Center (RERC) on Low Vision and Blindness. This RERC must research and develop technologies that will improve the assessment of low vision and blindness and promote independence for individuals with low vision and blindness of all ages, including those who are deaf-blind and those with multiple disabilities. Specifically, the RERC must improve vision assessment for the changing and expanding population of individuals who are at risk for experiencing low vision and blindness, including but not limited to, the elderly, returning military veterans, and prematurely born infants. The RERC must also research and develop technologies that will improve individuals' access to graphical information, signage, and travel information and devices and appliances that have digital displays and control panels. In addition, the RERC must research and develop technologies to promote the participation of individuals with low vision and blindness in science, technology, engineering, and mathematics (STEM) education. Regarding participation in STEM education, these technologies include but are not limited to accessible scientific measurement instruments, tools, and materials.

Priority 2—RERC on Wireless Technologies.

The Assistant Secretary for Special Education and Rehabilitative Services establishes a priority for a Rehabilitation

Engineering Research Center (RERC) on Wireless Technologies. Under this priority, the RERC must research, develop, and evaluate innovative technologies and products that facilitate the use of wireless technologies for individuals with disabilities. The RERC must research and develop wireless hardware and software that will meet the needs, promote independence, and improve the quality of life and community participation of individuals with disabilities. The RERC must also work with and provide information to relevant Federal agencies, designers, and manufacturers regarding barriers to and methods for facilitating the use of wireless technologies by individuals with disabilities.

Requirements Applicable to Both Priorities

A RERC established under either of the proposed priorities in this notice must be designed to contribute to the following outcomes:

(1) Increased technical and scientific knowledge relevant to its designated priority research area. The RERC must contribute to this outcome by conducting high-quality, rigorous research and development projects.

(2) Increased innovation in technologies, products, environments, performance guidelines, and monitoring and assessment tools applicable to its designated priority research area. The RERC must contribute to this outcome through the development and testing of these innovations.

(3) Improved research capacity in its designated priority research area. The RERC must contribute to this outcome by collaborating with the relevant industry, professional associations, institutions of higher education, health care providers, or educators, as appropriate.

(4) Improved awareness and understanding of cutting edge developments in technologies within its designated priority research area. The RERC must contribute to this outcome by identifying and communicating with NIDRR, individuals with disabilities and their representatives, disability organizations, service providers, professional journals, manufacturers, and other interested parties regarding trends and evolving product concepts related to its designated priority research area.

(5) Increased impact of research in the designated priority research area. The RERC must contribute to this outcome by providing technical assistance to relevant public and private organizations, individuals with disabilities, employers, and schools on policies, guidelines, and standards related to its designated priority research area.

(6) Increased transfer of RERC-developed technologies to the marketplace. The RERC must contribute to this outcome by developing and implementing a plan for ensuring that all technologies developed by the RERC are made available to the public. The technology transfer plan must be developed in the first year of the project period in consultation with the NIDRR-funded Disability Rehabilitation Research Project, Center on Knowledge Translation for Technology Transfer.

In addition, under each priority, the RERC must—

- Have the capability to design, build, and test prototype devices and assist in the technology transfer and knowledge translation of successful solutions to relevant production and service delivery settings;
- Evaluate the efficacy and safety of its new products, instrumentation, or assistive devices;
- Provide as part of its proposal, and then implement, a plan that describes how it will include, as appropriate, individuals with disabilities or their representatives in all phases of its activities, including research, development, training, dissemination, and evaluation;
- Provide as part of its proposal, and then implement, in consultation with the NIDRR-funded National Center for the Dissemination of Disability Research, a plan to disseminate its research results to individuals with disabilities and their representatives, disability organizations, service providers, professional journals, manufacturers, and other interested parties;
- Conduct a state-of-the-science conference on its designated priority research area in the fourth year of the project period, and publish a comprehensive report on the final outcomes of the conference in the fifth year of the project period; and
- Coordinate research projects of mutual interest with relevant NIDRR-funded projects, as identified through consultation with the NIDRR project officer.

Types of Priorities

When inviting applications for a competition using one or more priorities, we designate the type of each priority as absolute, competitive preference, or invitational through a notice in the **Federal Register**. The effect of each type of priority follows:

Absolute priority: Under an absolute priority, we consider only applications that meet the priority (34 CFR 75.105(c)(3)).

Competitive preference priority: Under a competitive preference priority, we give competitive preference to an application by (1) Awarding additional points, depending on the extent to which the application meets the priority (34 CFR 75.105(c)(2)(i)); or (2) selecting an application that meets the priority over an application of comparable merit that does not meet the priority (34 CFR 75.105(c)(2)(ii)).

Invitational priority: Under an invitational priority, we are particularly interested in applications that meet the priority. However, we do not give an application that meets the priority a preference over other applications (34 CFR 75.105(c)(1)).

This notice does not preclude us from proposing additional priorities, requirements, definitions, or selection criteria, subject to meeting applicable rulemaking requirements.

Note: This notice does *not* solicit applications. In any year in which we choose to use one or more of these priorities, we invite applications through a notice in the **Federal Register.**

Executive Order 12866: This notice has been reviewed in accordance with Executive Order 12866. Under the terms of the order, we have assessed the potential costs and benefits of this final regulatory action.

The potential costs associated with this final regulatory action are those resulting from statutory requirements and those we have determined as necessary for administering this program effectively and efficiently.

In assessing the potential costs and benefits—both quantitative and qualitative—of this final regulatory action, we have determined that the benefits of the final priorities justify the costs.

Summary of potential costs and benefits: The benefits of the Disability and Rehabilitation Research Projects and Centers Programs have been well established over the years in that similar projects have been completed successfully. These final priorities will generate new knowledge through research and development. Another benefit of these final priorities is that the establishment of new RERCs will improve the lives of individuals with disabilities. The new RERCs will generate and promote the use of new technologies and information that will improve the options for individuals with disabilities with regard to community living and community participation.

Accessible Format: Individuals with disabilities can obtain this document in

an accessible format (*e.g.,* braille, large print, audiotape, or computer diskette) on request to the Grants and Contracts Services Team, U.S. Department of Education, 400 Maryland Avenue, SW., room 5075, PCP, Washington, DC 20202–2550. *Telephone:* (202) 245–7363. If you use a TDD, call the FRS, toll free, at 1–800–877–8339.

Electronic Access to This Document: The official version of this document is the document published in the **Federal Register**. Free Internet access to the official edition of the **Federal Register** and the Code of Federal Regulations is available via the Federal Digital System at: *http://www.gpo.gov/fdsys.* At this site you can view this document, as well as all other documents of this Department published in the **Federal Register**, in text or Adobe Portable Document Format (PDF). To use PDF you must have Adobe Acrobat Reader, which is available free at the site.

You may also access documents of the Department published in the **Federal Register** by using the article search feature at: *http://www.federalregister.gov.* Specifically, through the advanced search feature at this site, you can limit your search to documents published by the Department.

Dated: June 21, 2011.

Alexa Posny,

Assistant Secretary for Special Education and Rehabilitative Services.

[FR Doc. 2011–15932 Filed 6–23–11; 8:45 am]

BILLING CODE 4000–01–P

DEPARTMENT OF EDUCATION

List of Correspondence

AGENCY: Office of Special Education and Rehabilitative Services; Department of Education.

ACTION: List of Correspondence from October 1, 2010 through December 31, 2010.

SUMMARY: The Secretary is publishing the following list pursuant to section 607(f) of the Individuals with Disabilities Education Act (IDEA). Under section 607(f) of the IDEA, the Secretary is required, on a quarterly basis, to publish in the **Federal Register** a list of correspondence from the U.S. Department of Education (Department) received by individuals during the previous quarter that describes the interpretations of the Department of the IDEA or the regulations that implement the IDEA. This list and the letters or other Departmental documents described in this list, with personally identifiable information redacted, as appropriate, can be found at: *http://www2.ed.gov/policy/speced/guid/idea/index.html.*

FOR FURTHER INFORMATION CONTACT: Jessica Spataro or Mary Louise Dirrigl. *Telephone:* (202) 245–7468.

If you use a telecommunications device for the deaf (TDD), you can call the Federal Relay Service (FRS), toll free, at 1–800–877–8339.

Individuals with disabilities can obtain a copy of this list and the letters or other Departmental documents described in this list in an accessible format (*e.g.,* braille, large print, audiotape, or computer diskette) by contacting Jessica Spataro or Mary Louise Dirrigl at (202) 245–7468.

SUPPLEMENTARY INFORMATION: The following list identifies correspondence from the Department issued from October 1, 2010 through December 31, 2010. Included on the list are those letters that contain interpretations of the requirements of the IDEA and its implementing regulations, as well as letters and other documents that the Department believes will assist the public in understanding the requirements of the law and its regulations. The date of and topic addressed by each letter are identified, and summary information is also provided, as appropriate. To protect the privacy interests of the individual or individuals involved, personally identifiable information has been redacted, as appropriate.

Part B—Assistance for Education of All Children With Disabilities

Section 614—Evaluations, Eligibility Determinations, Individualized Education Programs, And Educational Placements

Topic Addressed: Individualized Education Programs.

○ Letter dated December 16, 2010 to individual (personally identifiable information redacted), responding to concerns about the use of seclusion and restraint with students with disabilities in schools.

Section 615—Procedural Safeguards

Topic Addressed: Impartial Due Process Hearings.

○ Letter dated October 4, 2010 to School Law Center, LLC attorneys Amy Goetz and Atlee Reilly, clarifying that the IDEA does not prevent a parent whose child changes school districts from filing a timely due process complaint against a local educational agency (LEA) where the child previously attended school.

○ Letter dated November 10, 2010 to Texas Education Agency General Counsel David Anderson, clarifying that it would be inconsistent with the IDEA for a State to adopt a regulation suspending the timeline for convening a resolution session when the State receives a complaint shortly before or during the LEA's winter break.

Topic Addressed: Finality Of Due Process Hearing Decisions.

○ Letter dated October 20, 2010 to District of Columbia Acting State Superintendent of Education Beth H. Colleye, regarding requests for reconsideration of final due process hearing decisions.

○ Letter dated October 28, 2010 to Maryland attorney Matthew Scott Weiner, regarding requests for reconsideration of final due process hearing decisions.

Part C—Infants and Toddlers With Disabilities

Section 639—Procedural Safeguards

Topic Addressed: Access To Records.

○ Letter dated October 13, 2010 to Florida Department of Health Early Steps Program Part C Coordinator Lynne Marie Price, regarding whether a State must provide parents with a copy of a test protocol that contains personally identifiable information about their child as part of their child's Part C IDEA records.

Other Letters That Do Not Interpret Idea But May Be of Interest to Readers

Topic Addressed: Harassment And Bullying.

○ Dear Colleague Letter dated October 26, 2010 from Office for Civil Rights Assistant Secretary Russlynn Ali, regarding bullying and harassment, including disability harassment.

Electronic Access to This Document: The official version of this document is the document published in the **Federal Register**. Free Internet access to the official edition of the **Federal Register** and the Code of Federal Regulations is available via the Federal Digital System at: *http://www.gpo.gov/fdsys.* At this site you can view this document, as well as all other documents of this Department published in the **Federal Register**, in text or Adobe Portable Document Format (PDF). To use PDF you must have Adobe Acrobat Reader, which is available free at the site.

You may also access documents of the Department published in the **Federal Register** by using the article search feature at: *http://www.federalregister.gov.* Specifically, through the advanced search feature at this site, you can limit your search to documents published by the Department.

(Catalog of Federal Domestic Assistance Number 84.027, Assistance to States for Education of Children with Disabilities)

Dated: June 21, 2011.

Alexa Posny,

Assistant Secretary for Special Education and Rehabilitative Services.

[FR Doc. 2011–15922 Filed 6–23–11; 8:45 am]

BILLING CODE 4000–01–P

DEPARTMENT OF EDUCATION

Privacy Act of 1974; System of Records

AGENCY: Federal Student Aid, U.S. Department of Education.

ACTION: Notice of an altered system of records.

SUMMARY: In accordance with the Privacy Act of 1974, as amended (Privacy Act), 5 U.S.C. 552a, the Chief Operating Officer for Federal Student Aid (FSA) of the Department of Education (Department) publishes this notice proposing to revise the system of records entitled ''National Student Loan Data System (NSLDS)'' (18–11–06), originally published on December 27, 1999 (64 FR 72395–72397) and altered on September 7, 2010 (75 FR 54331–54336).

In this notice, the Department proposes to revise this system of records to make updates needed as a result of amendments to the Program Integrity regulations that apply to institutions that participate in the Federal student financial aid programs under title IV of the Higher Education Act of 1965, as amended (HEA) that will impose new requirements on certain programs that prepare students for gainful employment in a recognized occupation. As a result of these regulatory changes, we have expanded the categories of records maintained in this system, the categories of individuals covered by the system, the system's purposes, and the routine uses to reflect needed programmatic disclosures. We also have expanded the authority under which the system of records is maintained to include the authority under sections 101, 102, 485, and 485B of the HEA (20 U.S.C. 1001, 1002, 1092, and 1092b) to collect data to determine whether an educational program provides training to prepare students for gainful employment in a recognized occupation.

The Department seeks comments on the proposed routine uses in the altered system of records notice on or before July 25, 2011.

The Department filed a report describing the altered system of records covered by this notice with the Chair of the Senate Committee on Homeland Security and Governmental Affairs, the Chair of the House Committee on Oversight and Government Reform, and the Administrator of the Office of Information and Regulatory Affairs, Office of Management and Budget (OMB), on June 20, 2011. This altered system of records will become effective at the later date of: (1) The expiration of the 40-day period for OMB review on July 30, 2011; or (2) July 25, 2011, unless the system of records needs to be changed as a result of public comment or OMB review.

ADDRESSES: Address all comments about the proposed routine uses in this altered system of records to: Director, NSLDS Systems, Operations and Aid Delivery Management Services, FSA, U.S. Department of Education, Union Center Plaza (UCP), 830 First Street, NE., room 44E3, Washington, DC 20202–5454. Telephone: 202–377–3547. If you prefer to send comments by e-mail, use the following address: *comments@ed.gov.*

You must include the term ''NSLDS comments'' in the subject line of your electronic message.

During or after the comment period, you may inspect all public comments about this notice in room 44D2, UCP, 4th floor, 830 First Street, NE., Washington, DC 20202–5454 between the hours of 8 a.m. and 4:30 p.m., Eastern Time, Monday through Friday of each week except Federal holidays.

Assistance to Individuals With Disabilities in Reviewing the Rulemaking Record

On request, we will supply an appropriate accommodation or auxiliary aid to an individual with a disability who needs assistance to review the comments or other documents in the public rulemaking record for this notice. If you want to schedule an appointment for this type of accommodation or auxiliary aid, please contact the person listed under **FOR FURTHER INFORMATION CONTACT**.

FOR FURTHER INFORMATION CONTACT: Director, NSLDS Systems, Operations and Aid Delivery Management Services, FSA, U.S. Department of Education, UCP, 830 First Street, NE., Washington, DC 20202–5454. Telephone: 202–377–3547. If you use a telecommunications device for the deaf (TDD), call the Federal Relay Service (FRS), toll free, at 1–800–877–8339. Individuals with disabilities can obtain this document in an accessible format (*e.g.,* braille, large print, audiotape or computer diskette) on request to the contact person listed under this section.

SUPPLEMENTARY INFORMATION:

Introduction

The Privacy Act of 1974 (5 U.S.C. 552a(e)(4) and (11)) requires the Department to publish in the **Federal Register** this notice of an altered system of records. The Department's regulations implementing the Privacy Act are in the Code of Federal Regulations (CFR), in 34 CFR part 5b.

The Privacy Act applies to information about an individual that is maintained in a system of records from which information is retrieved by a unique identifier associated with each individual, such as a name or Social Security number (SSN). The information about each individual is called a ''record,'' and the system, whether manual or computer-based, is called a ''system of records.'' The Privacy Act requires each agency to publish a notice of a new or altered system of records in the **Federal Register** and to prepare, whenever the agency publishes a new system of records or makes a significant change to an established system of records, a report to the Chair of the Committee on Oversight and Government Reform of the House of Representatives, the Chair of the Committee on Homeland Security and Governmental Affairs of the Senate, and the Administrator of the Office of Information and Regulatory Affairs, OMB.

A system of records is considered ''altered'' whenever an agency expands the types or categories of information maintained, significantly expands the types or categories of individuals about whom records are maintained, changes the purpose for which the information is used, changes the equipment configuration in a way that creates substantially greater access to the records, or adds a routine use disclosure to the system. This system of records was first published in the **Federal Register** on December 27, 1999 (64 FR 72395–97), and altered on September 7, 2010 (75 FR 54331–54336), and a number of changes are needed to update and accurately describe the current system of records.

This system of records will facilitate the Secretary of Education's performance of statutory duties to prescribe standards and procedures under sections 101, 102, 485, and 485B of the HEA (20 U.S.C. 1001, 1002, 1092, and 1092b) (including relevant definitions) that require all eligible institutions to report programmatic information for disclosure to students. This system of records will also allow institutions, lenders, and guaranty agencies to report information on all

aspects of loans and grants made under title IV of the HEA in uniform formats, in order to permit the direct comparison of data submitted by individual institutions, lenders, servicers, or guaranty agencies.

The notice describes an expansion of the type of information maintained in the system. Additional data will be collected from institutions with programs of study that prepare students for gainful employment in a recognized occupation. Institutions will report required information both on students who begin a gainful employment program and other information on students who complete these programs. Through the collection of this data, the information will be used to evaluate the effectiveness of gainful employment programs.

The notice also expands the categories of individuals covered by the system. The system contains records on identifiers for students (both title IV, HEA recipients and students who do not receive title IV aid) who begin programs of study during an award year in a program that prepares students for gainful employment in a recognized occupation. The system also contains records on students who complete a program that prepares students for gainful employment in a recognized occupation.

The notice also expands the authority under which the system of records is maintained to include the authority under sections 101, 102, and 485 of the HEA (20 U.S.C. 1001, 1002, and 1092) to collect data to determine whether the educational program provides training to prepare students for gainful employment in a recognized occupation. The notice also expands the system's purposes. Additional purposes for the information maintained in this system relating to institutions participating in and administering programs under title IV of the HEA are to obtain data on and to report on (i) Students in a gainful employment program and whether these students complete the program or matriculate to a higher credentialed program at the same institution or at another institution, (ii) the amounts that students who complete a gainful employment program borrow in private educational loans and receive from institutionally provided financing plans, as well as the total number of students enrolled in each gainful employment program at an institution at the end of the award year, and (iii) the median loan debt incurred by students who complete a gainful employment program, for the purposes of establishing whether a particular gainful employment program is successfully preparing students who complete the program to be gainfully employed and making this data available to the institution. Additional purposes for the information maintained in this system relating to the Department's oversight and administration of programs under title IV of the HEA are: To capture data to support compliance and to obtain and distribute performance metrics related to gainful employment programs and to provide data for program oversight and strategic decision-making in the administration of these programs.

Finally, the notice proposes to expand the current programmatic routine use disclosures needed to carry out responsibilities under the HEA. First, the notice proposes to expand current programmatic routine use 1(a) to indicate that the Department may disclose records to the applicant, guaranty agencies, educational institutions, financial institutions and servicers, and to Federal and State agencies to assist with the determination of institutional program eligibility. Second, the Department proposes to add new programmatic routine use 1(c) to permit the Department to disclose information from the system to institutions in order to obtain data on and to report on: (i) Students in a gainful employment program and whether these students complete the program or matriculate to a higher credentialed program at the same institution or at another institution; (ii) the amounts that students who complete a gainful employment program borrow in private educational loans and receive from institutionally provided financing plans, as well as the total number of students enrolled in each gainful employment program at an institution at the end of the award year; and (iii) median loan debt incurred by students who complete a gainful employment program.

This altered system of records better reflects the current programmatic routine use disclosures needed by FSA to establish applicant eligibility, as required under the HEA, and to determine whether for-profit institutions and occupationally specific training at other institutions lead to gainful employment in a recognized occupation. Collectively, these revisions will enhance the ability of the Secretary to collect and maintain information on loans made, insured, or guaranteed under Part B of title IV of the HEA, and loans made under Parts D and E of title IV of the HEA; and to establish measures for determining whether certain programs lead to gainful employment in recognized occupations and the conditions under which those programs remain eligible for title IV, HEA program funds.

Electronic Access to This Document: The official version of this document is the document published in the **Federal Register.** Free Internet access to the official edition of the **Federal Register** and the Code of Federal Regulations is available via the Federal Digital System at: *http://www.gpo.gov/fdsys.* At this site you can view this document, as well as all other documents of this Department published in the **Federal Register**, in text or Adobe Portable Document Format (PDF). To use PDF you must have Adobe Acrobat Reader, which is available free at the site.

You may also access documents of the Department published in the **Federal Register** by using the article search feature at: *http://www.federalregister.gov.* Specifically, through the advanced search feature at this site, you can limit your search to documents published by the Department.

Dated: June 20, 2011.

James Runcie,

Acting Chief Operating Officer, Federal Student Aid.

For the reasons discussed in the preamble, the Chief Operating Officer, Federal Student Aid, of the U.S. Department of Education (Department), publishes a notice of an altered system of records to read as follows:

SYSTEM NUMBER:

18–11–06.

SYSTEM NAME:

National Student Loan Data System (NSLDS).

SECURITY CLASSIFICATION:

None.

SYSTEM LOCATION:

Dell Perot Systems, 2300 West Plano Parkway, Plano, TX 75075–8247. (This is the computer center for the NSLDS Application Virtual Data Center.)

Iron Mountain, P.O. Box 294317, Lewisville, Texas 75029–4317. (This is the location where back-up tapes for NSLDS are maintained.)

CATEGORIES OF INDIVIDUALS COVERED BY THE SYSTEM:

This system contains records on borrowers under the title IV, Higher Education Act of 1965, as amended (HEA) loan programs. This system contains records on borrowers who have applied for and received loans under the William D. Ford Federal Direct Loan (Direct Loan) Program, the Federal Family Education Loan (FFEL) Program,

the Federal Insured Student Loan (FISL) Program, and the Federal Perkins Loan Program (including National Defense Student Loans, National Direct Student Loans, and Perkins Expanded Lending and Income Contingent Loans) (Perkins Loans). The NSLDS also contains records on recipients of Federal Pell Grants, Academic Competitiveness Grants (ACG), National Science and Mathematics Access to Retain Talent (National SMART) Grants, and Teacher Education Assistance for College and Higher Education (TEACH) Grants, the Iraq and Afghanistan Service Grants, as well as on persons who owe an overpayment on a Federal Pell Grant, an ACG Grant, a National SMART Grant, a Federal Supplemental Educational Opportunity Grant (FSEOG), Iraq and Afghanistan Service Grant, or a Federal Perkins Loan. NSLDS contains student enrollment information for those who have received an FFEL Loan, an FISL Loan, a Direct Loan, or a Perkins Loan. NSLDS contains Master Conduit Loan Program Data, Master Loan Participation Program (LPP) Data, and loan-level detail on FFEL Subsidized, Unsubsidized, and PLUS loans funded through those programs. The system also contains records on students (both title IV, HEA recipients and students who do not receive title IV aid) who, during an award year, begin attendance in a program that is at least one-academic-year training program that leads to a certificate, or other non-degree recognized credential and that prepares students for gainful employment in a recognized occupation, or who begin an eligible program provided by a proprietary institution of higher education or a postsecondary vocational institution. The system also contains records on students who complete a program that prepares students for gainful employment in a recognized occupation.

CATEGORIES OF RECORDS IN THE SYSTEM:

Records in NSLDS include, but are not limited to: (1) Borrower identifier information including Social Security Number (SSN), name, date of birth, and driver's license; (2) information on the borrower's loan(s) covering the period from the origination of the loan through final payment, cancellation, consolidation, discharge, or other final disposition including details such as loan amount, disbursements, balances, loan status, collections, claims, deferments, refunds, and cancellations; (3) student identifiers including the student's SSN, date of birth, and name, student enrollment information including the Office of Postsecondary Education identification number (OPEID number) of the institution where the student began a program of study that prepares students for gainful employment in a recognized occupation pursuant to sections 1001 and 1002 of the HEA (''gainful employment program''), the Classification of Instructional Program (CIP) code for the program in which the student enrolled, and if the student completed the program, the completion date, and CIP code of the completed program, the level of study, the amount of the student's private educational loan debt, the amount of institutionally provided financing owed by the student, whether the student matriculated to a higher credentialed program at the same institution or another institution, aggregated income information on graduates of the particular gainful employment program, and the median loan debt incurred by students who completed the gainful employment program; (4) student demographic information such as dependency status, citizenship, veteran status, marital status, gender, income and asset information, expected family contribution, and address; (5) information provided by the parent(s) of a dependent recipient, including, but not limited to: name, date of birth, SSN, marital status, e-mail address, highest level of schooling completed, and income and asset information; (6) information about the spousal income and asset information of a married borrower who is repaying a title IV, HEA loan under an income-based repayment plan; (7) Federal Pell Grant, ACG Grant, National SMART Grant, TEACH Grant, and Iraq and Afghanistan Service Grant amounts and dates of disbursement; (8) Federal Pell Grant, ACG Grant, National SMART Grant, Iraq and Afghanistan Service Grant, FSEOG, and Federal Perkins Loan Program overpayment amounts; (9) demographic and contact information on the guaranty agency that guarantees the borrower's FFEL loan and the lender(s), holder(s), and servicer(s) of the borrower's loan(s); (10) NSLDS user profiles that include name, SSN, date of birth, employer, and NSLDS user name; (11) information concerning the date of any default on loans and the aggregated loan data to support cohort default rate calculations for educational institutions, financial institutions, and guaranty agencies; (12) pre- and post-screening results used to determine a student or parent's aid eligibility; and, (13) information on financial institutions participating in the loan participation and sale programs established by the Department under the Ensured Continued Access to Student Loan Act of 2008 (ECASLA), including the collection of: ECASLA loan-level funding amounts, dates of ECASLA participation for financial institutions, dates and amounts of loans sold to the Department under ECASLA, and the amount of loans funded by the Department's programs but repurchased by the lender.

AUTHORITY FOR MAINTENANCE OF THE SYSTEM:

The authority under which the system is maintained includes sections 101, 102, 485, and 485B of the HEA (20 U.S.C. 1001, 1002, 1092, and 1092B). The collection of SSNs of borrowers who are covered by this system is authorized by 31 U.S.C. 7701 and Executive Order 9397 (November 22, 1943), as amended by Executive Order 13478 (November 18, 2008).

PURPOSE(S):

The information contained in this system is maintained for the following purposes relating to students and borrowers: (1) To determine student/borrower eligibility for title IV, HEA programs by NSLDS pre- and post-screening processes; (2) to report changes in student/borrower enrollment status and enrollment in programs subject to the Program Integrity regulations published in the **Federal Register** on October 29, 2010 (75 FR 66832) that address gainful employment reporting via the Gainful Employment Reporting Process; (3) to track loan borrowers and students who owe grant overpayment amounts (debtors); (4) to provide an Exit Counseling tool for Teach Grants, FFEL, and Direct Loan programs that provides various calculators, requires students to complete a quiz to ensure understanding of their repayment obligations, and collects information to assist in the activity of skip-tracing for loan holders; (5) to provide Web-based access for borrowers/students to their loan, grant, and enrollment data; (6) to maintain information on the status of student loans; (7) to maintain information on Federal Pell, ACG, National SMART, TEACH, and Iraq and Afghanistan Service Grant awards to students; and (8) to provide borrowers and NSLDS users with loan refund/cancellation details. The information maintained in this system is also maintained for the following purposes relating to institutions participating in and administering the title IV, HEA programs: (1) To permit Department staff, Department contractors, guaranty agencies, eligible lenders, and eligible institutions of higher education to verify the eligibility of a student, potential

student, or parent for loans; (2) to provide student aggregate loan calculations to educational institutions; (3) to track loan transfers from one entity to another; (4) to determine default rates for educational institutions, guaranty agencies, and lenders; (5) to prepare electronic financial aid histories on students or borrowers for educational institutions, guaranty agencies, Department staff, and Department contractors; (6) to alert educational institutions of changes in financial aid eligibility of students via the Transfer Student Monitoring process; (7) to assist Department staff, Department contractors and agents, guaranty agencies, educational institutions, lenders, and servicers in collecting debts arising from receipt of title IV, HEA funds; (8) to assess title IV, HEA program administration of guaranty agencies, educational institutions, lenders, and servicers; (9) to display organizational contact information provided by educational institutions, guaranty agencies, lenders, and servicers; (10) to provide reporting capabilities for educational institutions, guaranty agencies, lenders, and servicers for use in title IV, HEA administrative functions and for the Department for use in oversight and compliance; (11) to provide financial institutions, servicers, Department staff, and Department contractors with contact information on loan holders for use in the collection of loans; (12) to provide schools and servicers with information to resolve overpayments of Pell, ACG, National SMART, TEACH, Iraq and Afghanistan Service Grants, and FSEOG grants; (13) to assist Department staff, contractors, guaranty agencies, and the Department of Justice in the collection of debts owed to the Department under title IV of the HEA; (14) to obtain data on and to report on students in a gainful employment program and whether these students complete the program or matriculate to a higher credentialed program at the same institution or at another institution for the purposes of establishing whether a particular gainful employment program is successfully preparing students who complete the program to be gainfully employed and making this information available to the institution; and (15) to obtain information on and to report on the amounts that students who complete a gainful employment program borrow in private educational loans and receive from institutionally provided financing plans, as well as the total number of students enrolled in each gainful employment program at an institution at the end of the award year and the median loan debt incurred by students who complete a gainful employment program, for the purposes of establishing whether a particular gainful employment program is successfully preparing students who complete the program to be gainfully employed and making this information available to the institution. The information maintained in this system is also maintained for the following purposes relating to the Department's oversight and administration of the title IV, HEA programs: (1) To assist audit and program review planning; (2) to support research studies and policy development; (3) to conduct budget analysis and program review planning; (4) to provide information that supports the Department's compliance with the Federal Credit Reform Act of 1990, as amended (CRA); (5) to ensure only authorized users access the database and to maintain a history of the student/borrower information reviewed; (6) to track the Department's interest in loans funded through ECASLA; (7) to track TEACH grants that have been converted to loans; (8) to track eligibility for and participation in Public Service Loan Forgiveness; (9) to capture data to support compliance and to obtain and distribute performance metrics related to gainful employment programs; and (10) to provide data for program oversight and strategic decision-making in the administration of higher education programs.

ROUTINE USES OF RECORDS MAINTAINED IN THE SYSTEM, INCLUDING CATEGORIES OF USERS AND THE PURPOSES OF SUCH USES:

The Department may disclose information contained in a record in this system of records under the routine uses listed in this system of records notice without the consent of the individual if the disclosure is compatible with the purposes for which the record was collected. These disclosures may be made on a case-by-case basis or, if the Department has complied with the computer matching requirements of the Privacy Act of 1974, as amended, under a computer matching agreement.

(1) *Program Disclosures.*

The Department may disclose records for the following program purposes:

(a) To verify the identity of the applicant involved, the accuracy of the record, or to assist with the determination of program eligibility and benefits, as well as institutional program eligibility, the Department may disclose records to the applicant, guaranty agencies, educational institutions, financial institutions and servicers, and to Federal and State agencies;

(b) To support default rate calculations and/or provide information on borrowers' current loan status, the Department may disclose records to guaranty agencies, educational institutions, financial institutions, servicers, and State agencies;

(c) To obtain data on and to report on students enrolled in a gainful employment program, students who complete a gainful employment program, information on the amounts of private educational loans and institutionally provided financing plans that students have incurred as a result of completing their gainful employment program, whether students in a gainful employment program matriculate to a higher credentialed program at the same institution or another institution, the total number of students in each gainful employment program at an institution at the end of the award year, and the median debt incurred by students who complete a gainful employment program, the Department may disclose records to educational institutions;

(d) To provide financial aid history information to aid in their administration of title IV, HEA programs, the Department may disclose records to financial aid professionals, guaranty agencies, loan holders, or servicers;

(e) To support auditors and program reviewers in planning and carrying out their assessments of title IV, HEA program compliance, the Department may disclose records to guaranty agencies, educational institutions, financial institutions and servicers, and to Federal, State, and local agencies;

(f) To support governmental researchers and policy analysts, the Department may disclose records to Federal, State, and local agencies using safeguards for system integrity and ensuring compliance with the Privacy Act;

(g) To support Federal budget analysts in the development of budget needs and forecasts, the Department may disclose records to Federal and State agencies;

(h) To assist in locating holders of loan(s), the Department may disclose records to students/borrowers, guaranty agencies, educational institutions, financial institutions and servicers, and Federal agencies;

(i) To assist analysts in assessing title IV, HEA program administration by guaranty agencies, educational institutions, and financial institutions and servicers, the Department may disclose records to Federal and State agencies;

(j) To assist loan holders in locating borrowers, the Department may disclose records to guaranty agencies,

educational institutions, financial institutions that hold an interest in the loan and their servicers, and to Federal agencies;

(k) To assist with meeting requirements under the CRA, the Department may disclose records to Federal agencies;

(l) To assist program administrators with tracking refunds and cancellations of title IV, HEA loans, the Department may disclose records to guaranty agencies, educational institutions, financial institutions and servicers, and to Federal and State agencies;

(m) To enforce the terms of a loan, assist in the collection of a loan, or assist in the collection of an aid overpayment, the Department may disclose records to guaranty agencies, loan servicers, educational institutions and financial institutions, to the Department of Justice and private counsel retained by the Department of Justice, and to other Federal, State, or local agencies; and

(n) To assist the Department in tracking loans funded under ECASLA, the Department may disclose records to Federal agencies.

(2) *Disclosure for Use by Other Law Enforcement Agencies.* The Department may disclose information to any Federal, State, or local or foreign agency or other public authority responsible for enforcing, investigating, or prosecuting violations of administrative, civil, or criminal law or regulation if that information is relevant to any enforcement, regulatory, investigative, or prosecutorial responsibility within the receiving entity's jurisdiction.

(3) *Enforcement Disclosure.* In the event that information in this system of records indicates, either on its face or in connection with other information, a violation or potential violation of any applicable statute, regulation, or order of a competent authority, the Department may disclose the relevant records to the appropriate agency, whether foreign, Federal, State, tribal, or local, charged with the responsibility of investigating or prosecuting that violation or charged with enforcing or implementing the statute, Executive Order, rule, regulation, or order issued pursuant thereto.

(4) *Litigation and Alternative Dispute Resolution (ADR) Disclosures.*

(a) *Introduction.* In the event that one of the following parties is involved in litigation or ADR, or has an interest in litigation or ADR, the Department may disclose certain records to the parties described in paragraphs (b), (c), and (d) of this routine use under the conditions specified in those paragraphs:

(i) The Department or any of its components; or

(ii) Any Department employee in his or her official capacity; or

(iii) Any Department employee in his or her individual capacity where the Department of Justice (DOJ) agrees to or has been requested to provide or arrange for representation of the employee; or

(iv) Any Department employee in his or her individual capacity where the Department has agreed to represent the employee; or

(v) The United States, where the Department determines that the litigation is likely to affect the Department or any of its components.

(b) *Disclosure to the DOJ.* If the Department determines that disclosure of certain records to the DOJ is relevant and necessary to litigation or ADR, and is compatible with the purpose for which the records were collected, the Department may disclose those records as a routine use to the DOJ.

(c) *Adjudicative Disclosures.* If the Department determines that disclosure of certain records to an adjudicative body before which the Department is authorized to appear or to an individual or entity designated by the Department or otherwise empowered to resolve or mediate disputes is relevant and necessary to litigation or ADR, the Department may disclose those records as a routine use to the adjudicative body, individual, or entity.

(d) *Disclosure to Parties, Counsel, Representatives, and Witnesses.* If the Department determines that disclosure of certain records is relevant and necessary to litigation or ADR, the Department may disclose those records as a routine use to the party, counsel, representative, or witness.

(5) *Freedom of Information Act (FOIA) or Privacy Act Advice Disclosure.* The Department may disclose records to the DOJ or the Office of Management and Budget (OMB) if the Department seeks advice regarding whether records maintained in this system of records are required to be disclosed under the FOIA or the Privacy Act.

(6) *Contract Disclosure.* If the Department contracts with an entity to perform any function that requires disclosing records to the contractor's employees, the Department may disclose the records to those employees. Before entering into such a contract, the Department shall require the contractor to establish and maintain the safeguards required under the Privacy Act (5 U.S.C. 552a(m)) with respect to the records in the system.

(7) *Congressional Member Disclosure.* The Department may disclose records to a Member of Congress in response to an inquiry from the Member made at the written request of the individual whose records are being disclosed. The Member's right to the information is no greater than the right of the individual who requested it.

(8) *Employment, Benefit, and Contracting Disclosure.*

(a) *For Decisions by the Department.* The Department may disclose a record to a Federal, State, or local agency maintaining civil, criminal, or other relevant enforcement or other pertinent records, or to another public authority or professional organization, if necessary to obtain information relevant to a Departmental decision concerning the hiring or retention of an employee or other personnel action, the issuance of a security clearance, the letting of a contract, or the issuance of a license, grant, or other benefit.

(b) *For Decisions by Other Public Agencies and Professional Organizations.* The Department may disclose a record to a Federal, State, local, or other public authority or professional organization, in connection with the hiring or retention of an employee or other personnel action, the issuance of a security clearance, the reporting of an investigation of an employee, the letting of a contract, or the issuance of a license, grant, or other benefit, to the extent that the record is relevant and necessary to the receiving entity's decision on the matter.

(9) *Employee Grievance, Complaint, or Conduct Disclosure.* The Department may disclose a record in this system of records to another agency of the Federal Government if the record is relevant to one of the following proceedings regarding a present or former employee of the Department: Complaint, grievance, or disciplinary or competency determination proceedings. The disclosure may only be made during the course of the proceeding.

(10) *Labor Organization Disclosure.* The Department may disclose records from this system of records to an arbitrator to resolve disputes under a negotiated grievance procedure or to officials of labor organizations recognized under 5 U.S.C. 71 when relevant and necessary to their duties of exclusive representation.

(11) *Disclosure to the DOJ.* The Department may disclose records to the DOJ to the extent necessary for obtaining DOJ advice on any matter relevant to an audit, inspection, or other inquiry related to the programs covered by this system.

(12) *Disclosure to the OMB for CRA Support.* The Department may disclose records to OMB as necessary to fulfill

CRA requirements. These requirements currently include transfer of data on lender interest benefits and special allowance payments, defaulted loan balances, and supplemental pre-claims assistance payments information.

(13) *Disclosure in the Course of Responding to Breach of Data.* The Department may disclose records from this system to appropriate agencies, entities, and persons when: (a) The Department suspects or has confirmed that the security or confidentiality of information in the system of records has been compromised; (b) the Department has determined that as a result of the suspected or confirmed compromise there is a risk of harm to economic or property interests, identity theft or fraud, or harm to the security or integrity of this system or other systems or programs (whether maintained by the Department or another agency or entity) that rely upon the compromised information; and (c) the disclosure made to such agencies, entities, and persons is reasonably necessary to assist in connection with the Department's efforts to respond to the suspected or confirmed compromise and prevent, minimize, or remedy such harm.

DISCLOSURE TO CONSUMER REPORTING AGENCIES:

Disclosures pursuant to 5 U.S.C. 552a(b)(12): The Department may disclose the following information to a consumer reporting agency regarding a valid overdue claim of the Department: (1) The name, address, taxpayer identification number, and other information necessary to establish the identity of the individual responsible for the claim; (2) the amount, status, and history of the claim; and (3) the program under which the claim arose. The Department may disclose the information specified in this paragraph under 5 U.S.C. 552a(b)(12) and the procedures contained in subsection 31 U.S.C. 3711(e). A consumer reporting agency to which these disclosures may be made is defined in 15 U.S.C. 1681a(f) and 31 U.S.C. 3701(a)(3).

POLICIES AND PRACTICES FOR STORING, RETRIEVING, ACCESSING, RETAINING, AND DISPOSING OF RECORDS IN THE SYSTEM:

STORAGE:

The records are maintained electronically.

RETRIEVABILITY:

In order for users to retrieve student/borrower information they must supply the student/borrower SSN, name, and date of birth.

SAFEGUARDS:

Physical access to this system housed within the Virtual Data Center is controlled by a computerized badge reading system, and the entire complex is patrolled by security personnel during non-business hours. The computer system employed by the Department offers a high degree of resistance to tampering and circumvention. Multiple levels of security are maintained within the computer system control program. This security system limits data access to Department and contract staff on a ''need-to-know'' basis, and controls individual users' ability to access and alter records within the system. All users of this system of records are given a unique user ID with personal identifiers. All interactions by individual users with the system are recorded.

RETENTION AND DISPOSAL:

Records are retained for 15 years after an account is paid in full, and then destroyed in accordance with the Department's records retention and disposition schedule 051.

SYSTEM MANAGER(S) AND ADDRESS:

Director, National Student Loan Data System, FSA, U.S. Department of Education, UCP, 830 First Street, NE., 4th Floor, Washington, DC 20202–5454.

NOTIFICATION PROCEDURE:

If you wish to determine whether a record exists regarding you in this system of records, contact the system manager and provide your name, date of birth, SSN, and the name of the school or lender from which the loan or grant was obtained. Requests for notification about whether the system of records contains information about an individual must meet the requirements of the regulations at 34 CFR 5b.5, including proof of identity.

RECORD ACCESS PROCEDURES:

If you wish to gain access to a record in this system, contact the system manager and provide information as described in the notification procedure. Requests by an individual for access to a record must meet the requirements of the regulations at 34 CFR 5b.5, including proof of identity.

CONTESTING RECORD PROCEDURES:

If you wish to contest the content of a record in the system of records, you must contact the system manager with the information described in the notification procedures, identify the specific item(s) to be changed, and provide a justification for the change, including any supporting documentation. Requests to amend a record must meet the requirements of the Department's Privacy Act regulations at 34 CFR 5b.7.

RECORD SOURCE CATEGORIES:

Information is obtained from guaranty agencies, educational institutions, and financial institutions and servicers, and the Free Application for Federal Student Aid completed by students and parents. Information is also obtained from other Department systems such as the Direct Loan Servicing System (covered by the system of records entitled ''Common Services for Borrowers''); Debt Management Collection System (covered by the system of records entitled ''Common Servicers for Borrowers''); Common Origination and Disbursement System; Financial Management System; Student Aid Internet Gateway, Participant Management System (covered by the system of records entitled ''Student Aid Internet Gateway Enrollment''); Postsecondary Education Participants System (covered by the system of records entitled ''Postsecondary Education Participants System''); and Central Processing System (covered by the system of records entitled ''Federal Student Aid Application File'').

EXEMPTIONS CLAIMED FOR THE SYSTEM:

None.

[FR Doc. 2011–15747 Filed 6–23–11; 8:45 am]

BILLING CODE 4000–01–U

DEPARTMENT OF ENERGY

Intent To Prepare an Environmental Impact Statement; Continued Operation of the Department of Energy/National Nuclear Security Administration Sandia National Laboratories, NM

AGENCY: U.S. Department of Energy's National Nuclear Security Administration, DOE.

ACTION: Notice of intent to prepare an environmental impact statement and conduct public scoping meetings.

SUMMARY: Pursuant to the National Environmental Policy Act of 1969, as amended (42 U.S.C. 4321 *et seq.*) (NEPA), and the Council on Environmental Quality (CEQ) and the U.S. Department of Energy (DOE) regulations implementing NEPA (40 CFR Parts 1500–1508 and 10 CFR Part 1021, respectively), the National Nuclear Security Administration (NNSA), a semi-autonomous agency within DOE, announces its intention to prepare a site-wide environmental

impact statement (SWEIS) (DOE/EIS–0466) for the continued operation of DOE/NNSA activities at Sandia National Laboratories, New Mexico (SNL/NM) on Kirtland Air Force Base (KAFB) and within the Albuquerque area, as well as other DOE activities at both on-site and off-site locations (the NNSA Service Center, the NNSA Office of Secure Transportation, NNSA Kirtland Operations, the NNSA Aviation Facility, and the DOE National Training Center). The purpose of this notice is to invite individuals, organizations, and government agencies and entities to participate in developing the scope of the SWEIS. The new SWEIS will consider a No Action Alternative, which is to continue current operations through implementation of the 1999 Record of Decision (ROD) (64 FR 69996; 12/15/99) and subsequent NEPA decisions. Three action alternatives proposed for consideration in the SWEIS would be compared to the No Action Alternative. The three action alternatives would differ by either their type or level of operations and may include proposals for new operations or the reduction or elimination of certain operations.

DATES: NNSA invites comments on the scope of this SWEIS. The public scoping period starts with the publication of this notice and will continue until 45 days after publication in the **Federal Register.** NNSA will consider all comments defining the scope of the SWEIS received or postmarked by this date. Comments received or postmarked after this date will be considered to the extent practicable. NNSA will conduct public scoping meetings in Albuquerque, New Mexico, scheduled as follows:

- Tuesday, July 12, 2011—1–4 p.m., Hilton Albuquerque Hotel, 1901 University Boulevard Northeast, Albuquerque, New Mexico.
- Tuesday, July 12, 2011—6–9 p.m., Hilton Albuquerque Hotel, 1901 University Boulevard Northeast, Albuquerque, New Mexico.
- Wednesday, July 13, 2011—1–4 p.m., Hilton Albuquerque Hotel, 1901 University Boulevard Northeast, Albuquerque, New Mexico.
- Wednesday, July 13, 2011—6–9 p.m., Hilton Albuquerque Hotel, 1901 University Boulevard Northeast, Albuquerque, New Mexico.

These scoping meetings will provide the public with an opportunity to present comments, ask questions, and discuss issues with NNSA officials regarding the SWEIS. Preparation of the SWEIS will require participation of other Federal agencies. As land managers on and around KAFB, the U.S. Department of the Air Force and the U.S. Department of Agriculture, Forest Service (USFS) have an inherent interest in activities conducted onsite by NNSA; therefore DOE intends to request the participation of both the Air Force and the USFS as cooperating agencies.

ADDRESSES: To submit comments on the scope of the SWEIS, questions about the document or scoping meetings, or to be included on the document distribution list, please contact Jeanette Norte, NNSA Sandia Site Office, SWEIS Document Manager, P.O. Box 5400, Albuquerque, New Mexico 87185–5400; local telephone (505) 845–4808 or out of area toll free telephone number 1–855–766–4651; fax (505) 284–7197; or e-mail address: *sandia.sweis@doeal.gov.*

FOR FURTHER INFORMATION CONTACT: For general information about the DOE NEPA process, please contact Carol M. Borgstrom, Director, Office of NEPA Policy and Compliance (GC–54), U.S. Department of Energy, 1000 Independence Avenue, SW., Washington, DC 20585; e-mail: *askNEPA@hq.doe.gov;* telephone: 202–586–4600, or leave a message at 1–800–472–2756; or fax: 202–586–7031. Additional information regarding DOE NEPA activities is available on the Internet through the NEPA Web site at *http://nepa.energy.gov.*

SUPPLEMENTARY INFORMATION:

Background: SNL/NM is one of three national laboratories in NNSA's nuclear security enterprise. SNL/NM is a multi-disciplinary, multi-purpose national laboratory primarily engaged in work that supports national security, homeland security initiatives, environmental stewardship, and defense research and development programs (R&D) for DOE/NNSA and other government entities. Responsibilities in support of nuclear weapons activities include design, certification, and assessment of non-nuclear subsystems of nuclear weapons; system integration; safety, security, reliability, and use control of nuclear weapons; direction and support to production plants regarding issues associated with production and dismantlement of nuclear weapons; production and/or acquisition of weapons components; surveillance and support of weapons in the stockpile; and work in nuclear intelligence, nonproliferation, and treaty verification technologies. Nonweapons research and science services are provided in areas including waste management, environmental restoration, hazardous and radioactive material transportation, energy efficiency and renewable energy, nuclear energy, fossil energy, magnetic fusion, basic energy sciences, supercomputing, and biological and environmental research. Additional activities include research on energy and environmental technologies, other engineering research, and work for other government agencies.

SNL/NM occupies about 8,658 acres on and around KAFB in central New Mexico, and is bordered on the north and west by the city of Albuquerque. The eastern boundary is USFS land and the southern boundary is the Isleta Pueblo. SNL/NM operations are managed and operated for DOE/NNSA under contract by the Sandia Corporation, a wholly owned subsidiary of the Lockheed Martin Corporation.

The 1999 SNL/NM SWEIS examined existing and potential impacts to the environment from ongoing and anticipated future DOE/NNSA operations conducted over approximately a 10-year period of time at SNL/NM and other DOE operations on and around KAFB. The three alternatives analyzed in the 1999 SNL/NM SWEIS were: (1) The No Action Alternative, to continue to operate at the planned levels as reflected in DOE Management Plans for 1998 through 2008; (2) The Expanded Operations Alternative, DOE's preferred alternative, to operate at the highest levels supported by then-current and new facilities, and (3) A Reduced Alternative, to operate at the minimum level of activity while still maintaining core mission capabilities. DOE's ROD, dated December 15, 1999, implemented the Expanded Operations Alternative.

In August 2006, DOE/NNSA completed a 5-year review of the 1999 SNL/NM SWEIS with the preparation of a Supplement Analysis (SA), *Final Supplement Analysis for the Site-Wide Environmental Impact Statement for Sandia National Laboratories, New Mexico* (DOE/EIS–0281–SA–04). This was done in accordance with DOE's regulatory requirement to evaluate site-wide NEPA documents at least every 5 years (10 CFR 1021.330) to determine the adequacy of an existing EIS. Based on the 2006 SA, DOE/NNSA determined that there were no substantial changes to the actions or impacts evaluated in the SNL/NM SWEIS, and there were no significant new circumstances or information relevant to environmental concerns; thus, the existing SNL/NM SWEIS was deemed adequate and neither a supplemental EIS nor a new EIS was required.

Purpose and Need: The purpose and need for agency action is to continue the operation of SNL/NM to provide support for DOE's core missions as

directed by the Congress and the President. SNL/NM supports NNSA national security objectives through the engineering of nuclear weapon components and other nuclear and non-nuclear activities. In addition, SNL/NM oversees DOE/NNSA national security related research, development, and testing programs and conducts extensive work for other federal agencies.

Proposed Action and Alternatives for the SWEIS: In accordance with applicable DOE and CEQ NEPA regulations, the No Action Alternative will be analyzed in the SWEIS and will form the baseline for the other action alternatives analyzed in the document. In this case, the No Action Alternative will be the continued implementation of the 1999 SNL/NM SWEIS ROD at SNL/NM over the next 5–10 years. The No Action Alternative will also include the implementation of other decisions supported by separate NEPA analyses completed since the issuance of the Final 1999 SNL/NM SWEIS. This includes four Supplement Analyses resulting in the determination that further NEPA documentation was not required, and one Environmental Impact Statement: (1) *Supplement Analysis for the Final Site-Wide Environmental Impact Statement for Sandia National Laboratories, New Mexico to Reestablishing Long-Term Pulse Mode Testing Capability at the Annular Core Research Reactor (ACRR), Sandia National Laboratories, New Mexico (ACRR Pulse Mode SA)* (DOE/EIS–0281–SA–01); (2) *Supplement Analysis for the Final Site-Wide Environmental Impact Statement for Sandia National Laboratories, New Mexico for Isentropic Compression and Flyer Plate Experiments Involving Plutonium at the Z and Saturn Accelerators (Pu-ICE SA)* (DOE/EIS–0281–SA–02); (3) *Supplement Analysis for the Final Site-Wide Environmental Impact Statement for Sandia National Laboratories, New Mexico for the Installation of a Petawatt Laser System in TA–IV Petawatt Laser System SA)* (DOE/EIS–0281–SA–03); (4) *Sandia National Laboratories, New Mexico Final Supplement Analysis for the Site-Wide Environmental Impact Statement (2006 SNL/NM SWEIS SA)* (DOE/EIS–0281–SA–04); and (5) *Final Complex Transformation Supplemental Programmatic Environmental Impact Statement* (DOE/EIS–0235–S4) and its RODs (73 FR 77644 and 73 FR 77656). In addition, the following seven environmental assessments and their associated Findings of No Significant Impacts will also be included in the No Action Alternative, as well as actions categorically excluded from the need for preparation of either an EA or an EIS: (1) *Environmental Assessment for the Microsystems and Engineering Sciences Applications Complex,* DOE/EA–1335, September 2000; (2) *Final Environmental Assessment for the Test Capabilities Revitalization at Sandia National Laboratories, New Mexico,* DOE/EA–1446, January 2003; (3) *Final Environmental Assessment for the Center for Integrated Nanotechnologies at Sandia National Laboratories, New Mexico,* DOE/EA–1457, March 2003; (4) *Final Environmental Assessment for the Proposed Consolidation of Neutron Generator Tritium Target Loading Production,* DOE/EA–1532, June 2005; (5) *Final Environmental Assessment for the Expansion of Permitted Land and Operations at the 9940 Complex and Thunder Range at Sandia National Laboratories, New Mexico,* DOE/EA–1603, April 2008; (6) *Final Environmental Assessment for the Removal Actions at the Technical Area III Classified Waste Landfill, Sandia National Laboratories, New Mexico,* DOE/EA–1729, August 2010; (7) *Final Environmental Assessment for Proposed Construction and Lease of New Facilities for the Department of Energy, National Nuclear Security Administration, Office of Secure Transportation (Albuquerque Transportation and Technology Center) Albuquerque, New Mexico,* U. S. General Services Administration, July 2006. These various documents can be reviewed at the DOE/NNSA Public Reading Room at Government Information/Zimmerman Library, MSC05 3020, 1 University of New Mexico, Albuquerque, NM 87131–0001, Tel: 505–277–5441, Fax: 505–277–6019; E-mail: *govref@unm.edu; Reading Room Web site: http://elibrary.unm.edu/doe;* and on the Internet at: *http://nepa.energy.gov.*

Three action alternatives will be considered in the SWEIS: Expanded Operations, Reduced Operations, and Renewable Energy Operations. All three of these alternatives will be compared to the No Action Alternative level of operations. The Expanded Operations Alternative will consider the highest level of operations that can be supported in existing facilities and potential new facilities. The Reduced Operations Alternative will consider an overall reduction in the level of operations while maintaining core mission capabilities. The Renewable Energy Operations Alternative will consider renewable energy R&D and the potential deployment of those technologies on the SNL/NM; this alternative or portions of it may be combined with either the Expanded Operations Alternative or the Reduced Operations Alternative. Any new renewable facilities/activities will be included in the analysis for the Expanded Operations Alternative if they are reasonably foreseeable (*i.e.,* proposed within the next 5–10 years).

This SWEIS will analyze potential impacts resulting from reasonably foreseeable operations and compare these impacts to those projected in the No-Action Alternative. The SWEIS will analyze projected impacts anticipated from operating SNL/NM and from other DOE activities at both on-site and off-site locations. Direct and indirect, as well as unavoidable and irreversible and irretrievable, impacts to the environment of SNL/NM operations and other DOE activities at both on-site and off-site locations will be identified and analyzed in the SWEIS. Where appropriate, mitigation strategies will also be analyzed in the SWEIS. Further, an updated evaluation of SNL/NM operational and transportation accident analyses and a new assessment of cumulative impacts associated with DOE/NNSA operations in Albuquerque will also be included. DOE/NNSA intends to re-evaluate the range of reasonable alternatives following public scoping.

Preliminary Identification of Environmental Issues: DOE/NNSA proposes to address the issues listed below when considering the potential impacts of each alternative. This list is presented to facilitate public comment during the scoping period and will be revisited as DOE/NNSA considers all scoping comments. It is not intended to be comprehensive, or to imply any predetermination of impacts.

- Potential effects on the public;
- Human health impacts resulting from exposure to hazardous materials under routine and reasonably foreseeable accident scenarios;
- Impacts on surface and groundwater, and on water use and quality;
- Impacts on air quality (including greenhouse gas emissions) and noise;
- Impacts on plants and animals, and their habitats, including species that are Federal- or state-listed as threatened or endangered, or of special concern;
- Impacts on geology and soil;
- Impacts on cultural resources such as Native American sites and Cold War structures and archaeological resources;
- Potential impacts from transportation and traffic;
- Socioeconomic impacts on potentially affected communities including environmental justice issues, such as disproportionately high and

adverse impacts to minority and low-income populations;

- Potential impacts on land use;
- Pollution prevention and waste management practices and activities;
- Energy efficiency activities;
- Unavoidable adverse impacts and irreversible and irretrievable commitments of resources;
- Potential cumulative environmental effects of past, present, and reasonably foreseeable future actions;
- The potential impacts of intentional destructive acts, including sabotage and terrorism, which will be addressed in a classified appendix to the SWEIS.

SWEIS Process and Invitation To Comment: The SWEIS scoping process provides an opportunity for the public to assist the DOE/NNSA in determining issues to be analyzed in the document. Four public scoping meetings will be held as noted under **DATES** in this Notice. The purpose of scoping meetings is to provide attendees an opportunity to present comments, ask questions, and discuss concerns regarding the SWEIS with DOE/NNSA officials. Comments and recommendations can also be submitted to Jeanette Norte as noted in this Notice under **ADDRESSES.** The SWEIS scoping meetings will use a format to facilitate dialogue between DOE/NNSA and the public and will provide individuals the opportunity to give written or oral statements. DOE/NNSA welcomes specific comments or suggestions on the SWEIS process. Copies of written comments and transcripts of oral comments provided to DOE/NNSA during the scoping period will be available at the DOE Public Reading Room at Government Information/ Zimmerman Library MSC05 3020, 1 University of New Mexico, Albuquerque, NM 87131–0001, Tel: 505–277–5441 Fax: 505–277–6019 E-mail: *govref@unm.edu; Reading Room Web site: http://elibrary.unm.edu/doe;* and on the Internet at *http://www.doeal.gov/sso/eshqa.aspx.* After the close of the public scoping period, DOE/NNSA will begin developing the draft SWEIS. DOE/NNSA expects to issue the draft SWEIS for public review and comment in 2012 for at least 60 days following publication of the Environmental Protection Agency's Notice of Availability in the **Federal Register.** The Notice of Availability, along with notices placed in local newspapers, will provide dates and locations for public hearings on the draft SWEIS and the deadline for comments on the draft document. Persons who submit comments with a mailing address during the scoping process will receive a copy of the draft SWEIS. Other persons who would like to receive a copy of the document for review when it is issued should notify Jeanette Norte at one of the addresses provided previously. DOE/NNSA will include comments received on the draft SWEIS in the final SWEIS.

Issued in Washington, DC, this 21st day of June 2011.

Thomas P. D'Agostino,

Administrator, National Nuclear Security Administration.

[FR Doc. 2011–15951 Filed 6–23–11; 8:45 am]

BILLING CODE 6450–01–P

DEPARTMENT OF ENERGY

Electricity Advisory Committee

AGENCY: Office of Electricity Delivery and Energy Reliability, Department of Energy.

ACTION: Notice of open meeting.

SUMMARY: This notice announces a meeting of the Electricity Advisory Committee (EAC). The Federal Advisory Committee Act (Pub. L. 92–463, 86 Stat. 770) requires that public notice of this meeting be announced in the **Federal Register**.

DATES: Tuesday, July 12, 2011, 8:30 a.m.–4:30 p.m. EDT.

ADDRESSES: National Rural Electric Cooperative Association, 4301Wilson Boulevard, Arlington, Virginia 22203.

FOR FURTHER INFORMATION CONTACT: David Meyer, Office of Electricity Delivery and Energy Reliability, U.S. Department of Energy, Forrestal Building, Rm. 8G–024, 1000 Independence Avenue, SW., Washington, DC 20585; telephone: (202) 586–3118; E-mail: *David.Meyer@hq.doe.gov.*

SUPPLEMENTARY INFORMATION:

Background: The Electricity Advisory Committee (EAC) was re-established in July 2010 in accordance with the provisions of the Federal Advisory Committee Act (FACA), as amended, 5 U.S.C, App. 2, to provide advice to the U.S. Department of Energy in implementing the Energy Policy Act of 2005, executing the Energy Independence and Security Act of 2007, and modernizing the nation's electricity delivery infrastructure. The Committee is composed of individuals of diverse backgrounds selected for their technical expertise and experience, established records of distinguished professional service, and their knowledge of issues that pertain to electricity.

Purpose of the Meeting: The meeting of the EAC is expected to include presentations and discussions of reports on a prosperous, low-carbon Europe and the Smart Grid, as well as activities of the Smart Grid, Energy Storage Technologies, and Transmission Subcommittees.

Tentative Agenda:

8:30–8:45 a.m. Welcome and Introductions
8:45–9:15 a.m. U.S. Department of Energy Priorities To Facilitate Development of the Nation's Electric Infrastructure
9:15–10:45 a.m. Roadmap 2050: *A Practical Guide to a Prosperous, Low-Carbon Europe:* Presentation and Discussion of Report by the European Climate Foundation
10:45–11 a.m. Break
11–11:45 a.m. White House Grid Modernization Report: Presentation and Discussion of Report on Smart Grid
11:45–12 p.m. Smart Grid Subcommittee: Discussion of Subcommittee Deliverables
12–1:15 p.m. Lunch
1:15.–2:30 p.m. Presentation and Discussion on Energy Storage Technology Policy and Financial Development
2:30–2:45 p.m. Energy Storage Technologies Subcommittee: Discussion of Subcommittee Deliverables
2:45–3 p.m. Break
3–4:15 p.m. Transmission Subcommittee; Discussion of Subcommittee Deliverables
4:15–4:30 p.m. Public Comments (Must register at time of check-in)
4:30 p.m. Adjourn

The meeting agenda may change to accommodate committee business. For EAC agenda updates, see the Committee Web site at: *http://www.oe.energy.gov/eac.htm.*

Public Participation: The meeting is open to the public. Members of the public who wish to make oral statements pertaining to agenda items should register to do so on the day of the meeting, Tuesday, July 12, 2011. Approximately fifteen minutes will be reserved for public comments. Time allotted per speaker will depend on the number who wish to speak but is not expected to exceed three minutes. Anyone who is not able to attend the meeting, or for whom the allotted public comments time is insufficient to address pertinent issues with the EAC, is invited to send a written statement to Mr. David Meyer, Designated Federal Officer (DFO), U.S. Department of Energy, Office of Electricity Delivery and Energy Reliability, 1000 Independence Avenue, SW., Washington, DC 20585 or e-mail to *david.meyer@hq.doe.gov.* The following

electronic file formats are acceptable: Microsoft Word (.doc), Corel Word Perfect (.wpd), Adobe Acrobat (.pdf), Rich Text Format (.rtf), plain text (.txt), Microsoft Excel (.xls), and Microsoft PowerPoint (.ppt). If you submit information that you believe to be exempt by law from public disclosure, you must submit one complete copy, as well as one copy from which the information claimed to be exempt by law from public disclosure has been deleted. DOE is responsible for the final determination concerning disclosure or nondisclosure of the information and for treating it in accordance with the DOE's Freedom of Information Act regulations (10 CFR 1004.11). The DFO is empowered to conduct the meeting in a fashion that will facilitate the orderly conduct of business.

Note: Delivery of the U.S. Postal Service mail to DOE continues to be delayed by several weeks due to security screening. The DOE, therefore, encourages those wishing to comment to submit comments electronically by e-mail. If comments are submitted by regular mail, the Department requests that they be accompanied by a CD or diskette containing electronic files of the submission.

Minutes: The minutes of the meeting will be available for public review and copying within 60 days and will be posted on the Committee Web site at *http://www.oe.energy.gov/eac.htm* or by contacting Mr. David Meyer at (202) 586–3118 or by e-mail at: *david.meyer@hq.doe.gov* .

Issued at Washington, DC, on June 20, 2011.

LaTanya R. Butler,

Acting Deputy Committee Management Officer.

[FR Doc. 2011–15841 Filed 6–23–11; 8:45 am]

BILLING CODE 6450–01–P

DEPARTMENT OF ENERGY

Federal Energy Regulatory Commission

[Docket No. CP11–497–000]

ANR Pipeline Company; Notice of Application for Abandonment

Take notice that on June 9, 2011, ANR Pipeline Company (ANR), 717 Texas Street, Houston, Texas 77002–2761, filed in Docket No. CP11–497–000, an application under section 7(b) of the Natural Gas Act (NGA) and section 157.7 and 157.18 of the Federal Energy Regulatory Commission (Commission), requesting authorization to abandon its obligation to provide transportation service through approximately 1.1 miles of 20-inch diameter pipeline from High Island Block A–563 to High Island Block A–582 platform (Line 787L), located in federal waters, offshore Texas. The application is on file with the Commission and open to public inspection. The filing may also be viewed on the Web at *http://www.ferc.gov* using the ''eLibrary'' link. Enter the docket number excluding the last three digits in the docket number field to access the document. For assistance, contact FERC at *FERCOnlineSupport@ferc.gov* or call toll-free, (866) 208–3676 or TTY, (202) 502–8659.

Any questions regarding this application should be directed to Rene Staeb, Manager, Project Determinations & Regulatory Administration, ANR Pipeline Company, 717 Texas Street, Houston, Texas 77002–2761, at (832) 320–5215 or fax (832) 320–6215 or *Rene_Staeb@transcanada.com.*

Pursuant to section 157.9 of the Commission's rules, 18 CFR 157.9, within 90 days of this Notice the Commission staff will either: complete its environmental assessment (EA) and place it into the Commission's public record (eLibrary) for this proceeding; or issue a Notice of Schedule for Environmental Review. If a Notice of Schedule for Environmental Review is issued, it will indicate, among other milestones, the anticipated date for the Commission staff's issuance of the final environmental impact statement (FEIS) or EA for this proposal. The filing of the EA in the Commission's public record for this proceeding or the issuance of a Notice of Schedule for Environmental Review will serve to notify federal and state agencies of the timing for the completion of all necessary reviews, and the subsequent need to complete all Federal authorizations within 90 days of the date of issuance of the Commission staff's FEIS or EA.

There are two ways to become involved in the Commission's review of this project. First, any person wishing to obtain legal status by becoming a party to the proceedings for this project should, on or before the comment date stated below, file with the Federal Energy Regulatory Commission, 888 First Street, NE., Washington, DC 20426, a motion to intervene in accordance with the requirements of the Commission's Rules of Practice and Procedure (18 CFR 385.214 or 385.211) and the Regulations under the NGA (18 CFR 157.10). A person obtaining party status will be placed on the service list maintained by the Secretary of the Commission and will receive copies of all documents filed by the applicant and by all other parties. A party must submit 7 copies of filings made with the Commission and must mail a copy to the applicant and to every other party in the proceeding. Only parties to the proceeding can ask for court review of Commission orders in the proceeding.

However, a person does not have to intervene in order to have comments considered. The second way to participate is by filing with the Secretary of the Commission, as soon as possible, an original and two copies of comments in support of or in opposition to this project. The Commission will consider these comments in determining the appropriate action to be taken, but the filing of a comment alone will not serve to make the filer a party to the proceeding. The Commission's rules require that persons filing comments in opposition to the project provide copies of their protests only to the party or parties directly involved in the protest.

Persons who wish to comment only on the environmental review of this project should submit an original and two copies of their comments to the Secretary of the Commission. Environmental commentors will be placed on the Commission's environmental mailing list, will receive copies of the environmental documents, and will be notified of meetings associated with the Commission's environmental review process. Environmental commentors will not be required to serve copies of filed documents on all other parties. However, the non-party commentors will not receive copies of all documents filed by other parties or issued by the Commission (except for the mailing of environmental documents issued by the Commission) and will not have the right to seek court review of the Commission's final order.

The Commission strongly encourages electronic filings of comments, protests and interventions in lieu of paper using the ''eFiling'' link at *http://www.ferc.gov.* Persons unable to file electronically should submit an original and 14 copies of the protest or intervention to the Federal Energy Regulatory Commission, 888 First Street, NE., Washington, DC 20426.

This filing is accessible on-line at *http://www.ferc.gov,* using the ''eLibrary'' link and is available for review in the Commission's Public Reference Room in Washington, DC. There is an ''eSubscription'' link on the Web site that enables subscribers to receive e-mail notification when a document is added to a subscribed docket(s). For assistance with any FERC Online service, please e-mail *FERCOnlineSupport@ferc.gov,* or call (866) 208–3676 (toll free). For TTY, call (202) 502–8659.

Comment Date: July 11, 2011.

Dated: June 20, 2011.

Kimberly D. Bose,

Secretary.

[FR Doc. 2011–15858 Filed 6–23–11; 8:45 am]

BILLING CODE 6717–01–P

DEPARTMENT OF ENERGY

Federal Energy Regulatory Commission

[Project No. 2784–004]

Pacific Gas and Electric Company; Notice of Application Accepted for Filing, Soliciting Motions To Intervene and Protests, Ready for Environmental Analysis, and Soliciting Comments, Recommendations, and Preliminary Terms and Conditions

Take notice that the following hydroelectric application has been filed with the Commission and is available for public inspection.

a. *Type of Application:* Subsequent License—Transmission Line Only.

b. *Project No.:* P–2784–004.

c. *Date filed:* April 18, 2011.

d. *Applicant:* Pacific Gas and Electric Company.

e. *Name of Project:* Rollins Transmission Line Project.

f. *Location:* The Rollins Transmission Line Project is located in Placer and Nevada counties, California.

g. *Filed Pursuant to:* Federal Power Act 16 U.S.C. 791(a)–825(r).

h. *Applicant Contact:* Forrest Sullivan, Senior Project Manager, Pacific Gas and Electric Company, 5555 Florin Perkins Road, Sacramento, CA 95826. *Tel:* (916) 386–5580.

i. *FERC Contact:* Mary Greene, (202) 502–8865 or *mary.greene@ferc.gov*.

j. *Deadline for filing motions to intervene and protests, comments, recommendations, preliminary terms and conditions:* 60 days from the issuance date of this notice; reply comments are due 105 days from the issuance date of this notice.

Motions to intervene, protests, comments, recommendations, preliminary terms and conditions may be filed electronically via the Internet. See 18 CFR 385.2001(a)(1)(iii) and the instructions on the Commission's Web site *http://www.ferc.gov/docs-filing/efiling.asp*. Commenters can submit brief comments up to 6,000 characters, without prior registration, using the eComment system at *http://www.ferc.gov/docs-filing/ecomment.asp*. You must include your name and contact information at the end of your comments. For assistance, please contact FERC Online Support at *FERCOnlineSupport@ferc.gov* or toll free at 1–866–208–3676, or for TTY, (202) 502–8659. Although the Commission strongly encourages electronic filing, documents may also be paper-filed. To paper-file, mail an original and seven copies to: Kimberly D. Bose, Secretary, Federal Energy Regulatory Commission, 888 First Street, NE., Washington, DC 20426.

The Commission's Rules of Practice require all intervenors filing documents with the Commission to serve a copy of that document on each person on the official service list for the project. Further, if an intervenor files comments or documents with the Commission relating to the merits of an issue that may affect the responsibilities of a particular resource agency, they must also serve a copy of the document on that resource agency.

k. This application has been accepted for filing and is now is ready for environmental analysis.

l. The Project is connected with the Yuba-Bear Hydroelectric Project, FERC project No. 2266, owned and operated by the Nevada Irrigation District (NID). Project facilities include a 3,851-ft long, three-phase, 60-kilovolt (kV), wood-pole transmission line extending from the existing Rollins Powerhouse switchyard to the junction with PG&E's Drum-Gras Valley-Weimer 60-kV transmission line. The current project also includes a single access road. The transmission line right-of-way (ROW) is 40-ft in width.

PG&E is not proposing to modify the existing project and does not plan any changes to the operation or maintenance of the transmission line.

m. A copy of the application is available for review at the Commission in the Public Reference Room or may be viewed on the Commission's Web site at *http://www.ferc.gov* using the ''eLibrary'' link. Enter the docket number excluding the last three digits in the docket number field to access the document. For assistance, contact FERC Online Support. A copy is also available for inspection and reproduction at the address in item h above.

Register online at *http://www.ferc.gov/docs-filing/esubscription.asp* to be notified via email of new filings and issuances related to this or other pending projects. For assistance, contact FERC Online Support.

n. Anyone may submit comments, a protest, or a motion to intervene in accordance with the requirements of Rules of Practice and Procedure, 18 CFR 385.210, .211, .214. In determining the appropriate action to take, the Commission will consider all protests or other comments filed, but only those who file a motion to intervene in accordance with the Commission's Rules may become a party to the proceeding. Any comments, protests, or motions to intervene must be received on or before the specified comment date for the particular application.

All filings must (1) bear in all capital letters the title ''PROTEST,'' ''MOTION TO INTERVENE,'' ''COMMENTS,'' ''REPLY COMMENTS,'' ''RECOMMENDATIONS,'' or ''PRELIMINARY TERMS AND CONDITIONS;'' (2) set forth in the heading the name of the applicant and the project number of the application to which the filing responds; (3) furnish the name, address, and telephone number of the person protesting or intervening; and (4) otherwise comply with the requirements of 18 CFR 385.2001 through 385.2005. All comments, recommendations, or terms and conditions must set forth their evidentiary basis and otherwise comply with the requirements of 18 CFR 4.34(b). Agencies may obtain copies of the application directly from the applicant. A copy of any protest or motion to intervene must be served upon each representative of the applicant specified in the particular application. A copy of all other filings in reference to this application must be accompanied by proof of service on all persons listed in the service list prepared by the Commission in this proceeding, in accordance with 18 CFR 4.34(b) and 385.2010.

o. *Procedural Schedule:*

The application will be processed according to the following revised Hydro Licensing Schedule. Revisions to the schedule may be made as appropriate.

Milestone	Target date
Filing of recommendations, and preliminary terms and conditions.	August 16, 2011.
Commission issues EA.	December 14, 2011.
Comments on EA or EIS.	January 30, 2012.
Modified terms and conditions.	March 28, 2012.

p. Final amendments to the application must be filed with the Commission no later than 30 days from the issuance date of this notice.

q. A license applicant must file no later than 60 days following the date of issuance of the notice of acceptance and ready for environmental analysis provided for in § 5.22: (1) A copy of the

water quality certification; (2) a copy of the request for certification, including proof of the date on which the certifying agency received the request; or (3) evidence of waiver of water quality certification.

Dated: June 17, 2011.

Kimberly D. Bose,

Secretary.

[FR Doc. 2011–15790 Filed 6–23–11; 8:45 am]

BILLING CODE 6717–01–P

DEPARTMENT OF ENERGY

Federal Energy Regulatory Commission

Combined Notice of Filings #2

Take notice that the Commission received the following exempt wholesale generator filings:

Docket Numbers: EG11–94–000.
Applicants: Hatch Solar Energy Center I, LLC.
Description: Notice of Self-Certification of Exempt Wholesale Generator Status of Hatch Solar Energy Center I, LLC.
Filed Date: 06/17/2011.
Accession Number: 20110617–5164.
Comment Date: 5 p.m. Eastern Time on Friday, July 08, 2011.

Take notice that the Commission received the following electric rate filings:

Docket Numbers: ER01–1305–018.
Applicants: Westar Generating, Inc.
Description: Westar Generating, Inc. Informational Filing.
Filed Date: 06/17/2011.
Accession Number: 20110617–5154.
Comment Date: 5 p.m. Eastern Time on Friday, July 08, 2011.

Docket Numbers: ER08–1501–002; ER09–86–002.
Applicants: Southwestern Electric Power Company.
Description: Compliance refund report of Southwestern Electric Power Company.
Filed Date: 06/17/2011.
Accession Number: 20110617–5175.
Comment Date: 5 p.m. Eastern Time on Friday, July 08, 2011.

Docket Numbers: ER10–1786–002.
Applicants: Credit Suisse Energy, LLC.
Description: Notice of Non-Material Change in Status of Credit Suisse Energy LLC.
Filed Date: 06/17/2011.
Accession Number: 20110617–5153.
Comment Date: 5 p.m. Eastern Time on Friday, July 08, 2011.

Docket Numbers: ER10–2131–001.
Applicants: Grand Ridge Energy LLC.
Description: Triennial Report of Grand Ridge Energy LLC.
Filed Date: 06/20/2011.
Accession Number: 20110620–5093.
Comment Date: 5 p.m. Eastern Time on Friday, August 19, 2011.

Docket Numbers: ER10–2133–001.
Applicants: Sheldon Energy LLC.
Description: Triennial Report of Sheldon Energy LLC.
Filed Date: 06/20/2011.
Accession Number: 20110620–5116.
Comment Date: 5 p.m. Eastern Time on Friday, August 19, 2011.

Docket Numbers: ER10–2137–001.
Applicants: Beech Ridge Energy LLC.
Description: Triennial Report of Beech Ridge Energy LLC.
Filed Date: 06/20/2011.
Accession Number: 20110620–5094.
Comment Date: 5 p.m. Eastern Time on Friday, August 19, 2011.

Docket Numbers: ER10–2140–001.
Applicants: Grand Ridge Energy IV LLC.
Description: Triennial Report of Grand Ridge Energy IV LLC.
Filed Date: 06/20/2011.
Accession Number: 20110620–5108.
Comment Date: 5 p.m. Eastern Time on Friday, August 19, 2011.

Docket Numbers: ER10–2141–001.
Applicants: Grand Ridge Energy V LLC.
Description: Triennial Report of Grand Ridge Energy V LLC.
Filed Date: 06/20/2011.
Accession Number: 20110620–5106.
Comment Date: 5 p.m. Eastern Time on Friday, August 19, 2011.

Docket Numbers: ER11–2207–001.
Applicants: Alta Wind IV, LLC.
Description: Alta Wind IV, LLC—Notice of Non-Material Change in Status.
Filed Date: 06/17/2011.
Accession Number: 20110617–5177.
Comment Date: 5 p.m. Eastern Time on Friday, July 08, 2011.

Docket Numbers: ER11–3614–002.
Applicants: Glacial Energy Holdings.
Description: Glacial Energy Holdings submits tariff filing per 35: Substitute Market-based Tariff of Glacial Energy Holdings to be effective 5/23/2011.
Filed Date: 06/20/2011.
Accession Number: 20110620–5000.
Comment Date: 5 p.m. Eastern Time on Monday, July 11, 2011.

Docket Numbers: ER11–3826–000.
Applicants: Black Hills/Colorado Electric Utility Company, LP.
Description: Black Hills/Colorado Electric Utility Company, LP submits tariff filing per 35.13(a)(1): Black Hills/Colorado Electric Utility Company, LP, Updated Rates and Tariff to be effective 8/15/2011.
Filed Date: 06/20/2011.
Accession Number: 20110620–5002.
Comment Date: 5 p.m. Eastern Time on Monday, July 11, 2011.

Docket Numbers: ER11–3827–000.
Applicants: Genon Power Midwest, LP.
Description: GenOn Power Midwest, LP submits notice of cancellation of the Connection and Site Agreement with American Transmission Systems, Inc *et al.*
Filed Date: 06/17/2011.
Accession Number: 20110620–0201.
Comment Date: 5 p.m. Eastern Time on Friday, July 08, 2011.

Docket Numbers: ER11–3828–000.
Applicants: PJM Interconnection, LLC.
Description: PJM Interconnection, LLC submits tariff filing per 35.13(a)(2)(iii: PJM Queue No. W1–076; Original Service Agreement No. 2945 to be effective 5/20/2011.
Filed Date: 06/20/2011.
Accession Number: 20110620–5022.
Comment Date: 5 p.m. Eastern Time on Monday, July 11, 2011.

Docket Numbers: ER11–3829–000.
Applicants: Wisconsin Power and Light Company.
Description: Wisconsin Power and Light Company submits tariff filing per 35.13(a)(2)(iii: WPL NSP–LBAAOCA to be effective 6/20/2011.
Filed Date: 06/20/2011.
Accession Number: 20110620–5024.
Comment Date: 5 p.m. Eastern Time on Monday, July 11, 2011.

Docket Numbers: ER11–3830–000.
Applicants: Avista Corporation.
Description: Avista Corporation submits tariff filing per 35.13(a)(2)(iii: Revised Appendix 6 to Attachment M to be effective 8/20/2011.
Filed Date: 06/20/2011.
Accession Number: 20110620–5081.
Comment Date: 5 p.m. Eastern Time on Monday, July 11, 2011.

Docket Numbers: ER11–3831–000.
Applicants: PJM Interconnection, LLC.
Description: PJM Interconnection, LLC submits tariff filing per 35.13(a)(2)(iii: Queue Position No. W1–024 ? Original Service Agreement No. 2943 to be effective 5/20/2011.
Filed Date: 06/20/2011.
Accession Number: 20110620–5083.
Comment Date: 5 p.m. Eastern Time on Monday, July 11, 2011.

Docket Numbers: ER11–3832–000.
Applicants: Southern California Edison Company.
Description: Southern California Edison Company submits tariff filing per 35.13(a)(2)(iii: Walnut Creek Energy

Generation Tie-Line Facilities Agreement RS. 485 to be effective 6/21/2011.

Filed Date: 06/20/2011.

Accession Number: 20110620–5100.

Comment Date: 5 p.m. Eastern Time on Monday, July 11, 2011.

Docket Numbers: ER11–3833–000.

Applicants: Southwest Power Pool, Inc.

Description: Southwest Power Pool, Inc. submits tariff filing per 35.13(a)(2)(iii: 2220 BP Wind Energy North America, Inc. GIA to be effective 5/23/2011.

Filed Date: 06/20/2011.

Accession Number: 20110620–5107.

Comment Date: 5 p.m. Eastern Time on Monday, July 11, 2011.

Docket Numbers: ER11–3834–000.

Applicants: Southwest Power Pool, Inc.

Description: Southwest Power Pool, Inc. submits tariff filing per 35.13(a)(2)(iii: 2221 Prairie Breeze Wind Energy, LLC GIA to be effective 5/23/2011.

Filed Date: 06/20/2011.

Accession Number: 20110620–5109.

Comment Date: 5 p.m. Eastern Time on Monday, July 11, 2011.

Docket Numbers: ER11–3835–000.

Applicants: Southwestern Electric Power Company.

Description: Southwestern Electric Power Company's Compliance report of expenditures recorded in calendar year 2010, and for its projected 2011 CWIP expenditures.

Filed Date: 06/20/2011.

Accession Number: 20110620–5110.

Comment Date: 5 p.m. Eastern Time on Monday, July 11, 2011.

Docket Numbers: ER11–3836–000.

Applicants: Southern California Edison Company.

Description: Southern California Edison Company submits tariff filing per 35.13(a)(2)(iii: LGIA Navy 1 Project Coso Finance Partners to be effective 6/2/2011.

Filed Date: 06/20/2011.

Accession Number: 20110620–5113.

Comment Date: 5 p.m. Eastern Time on Monday, July 11, 2011.

Take notice that the Commission received the following electric securities filings:

Docket Numbers: ES11–3–001.

Applicants: MDU Resources Group, Inc.

Description: Request for Amendment to Application of MDU Resources Group, Inc.

Filed Date: 06/20/2011.

Accession Number: 20110620–5111.

Comment Date: 5 p.m. Eastern Time on Monday, July 11, 2011.

Any person desiring to intervene or to protest in any of the above proceedings must file in accordance with Rules 211 and 214 of the Commission's Rules of Practice and Procedure (18 CFR 385.211 and 385.214) on or before 5 p.m. Eastern time on the specified comment date. It is not necessary to separately intervene again in a subdocket related to a compliance filing if you have previously intervened in the same docket. Protests will be considered by the Commission in determining the appropriate action to be taken, but will not serve to make protestants parties to the proceeding. Anyone filing a motion to intervene or protest must serve a copy of that document on the Applicant. In reference to filings initiating a new proceeding, interventions or protests submitted on or before the comment deadline need not be served on persons other than the Applicant.

As it relates to any qualifying facility filings, the notices of self-certification [or self-recertification] listed above, do not institute a proceeding regarding qualifying facility status. A notice of self-certification [or self-recertification] simply provides notification that the entity making the filing has determined the facility named in the notice meets the applicable criteria to be a qualifying facility. Intervention and/or protest do not lie in dockets that are qualifying facility self-certifications or self-recertifications. Any person seeking to challenge such qualifying facility status may do so by filing a motion pursuant to 18 CFR 292.207(d)(iii). Intervention and protests may be filed in response to notices of qualifying facility dockets other than self-certifications and self-recertifications.

The Commission encourages electronic submission of protests and interventions in lieu of paper, using the FERC Online links at *http://www.ferc.gov.* To facilitate electronic service, persons with Internet access who will eFile a document and/or be listed as a contact for an intervenor must create and validate an eRegistration account using the eRegistration link. Select the eFiling link to log on and submit the intervention or protests.

Persons unable to file electronically should submit an original and 14 copies of the intervention or protest to the Federal Energy Regulatory Commission, 888 First St., NE., Washington, DC 20426.

The filings in the above proceedings are accessible in the Commission's eLibrary system by clicking on the appropriate link in the above list. They are also available for review in the Commission's Public Reference Room in Washington, DC. There is an eSubscription link on the Web site that enables subscribers to receive e-mail notification when a document is added to a subscribed docket(s). For assistance with any FERC Online service, please e-mail *FERCOnlineSupport@ferc.gov.* or call (866) 208–3676 (toll free). For TTY, call (202) 502–8659.

Dated: June 20, 2011.

Nathaniel J. Davis, Sr.,

Deputy Secretary.

[FR Doc. 2011–15813 Filed 6–23–11; 8:45 am]

BILLING CODE 6717–01–P

DEPARTMENT OF ENERGY

Federal Energy Regulatory Commission

Combined Notice of Filings #1

Take notice that the Commission received the following electric rate filings:

Docket Numbers: ER10–2294–002.

Applicants: ORNI 18 LLC.

Description: Notice of Non-Material Changes in Status of ORNI 18 LLC.

Filed Date: 06/16/2011.

Accession Number: 20110616–5075.

Comment Date: 5 p.m. Eastern Time on Thursday, July 07, 2011.

Docket Numbers: ER11–3243–002.

Applicants: Southwest Power Pool, Inc.

Description: Southwest Power Pool, Inc. submits tariff filing per 35.17(b): Response to Request for Additional Information (KMEA NITSA/NOA) to be effective 3/1/2011.

Filed Date: 06/16/2011.

Accession Number: 20110616–5122.

Comment Date: 5 p.m. Eastern Time on Thursday, July 07, 2011.

Docket Numbers: ER11–3634–001.

Applicants: KES Kingsburg, L.P.

Description: KES Kingsburg, L.P. submits tariff filing per 35.17(b): Amended KES Kingsburg MBR to be effective 8/1/2011.

Filed Date: 06/17/2011.

Accession Number: 20110617–5145.

Comment Date: 5 p.m. Eastern Time on Friday, July 08, 2011.

Docket Numbers: ER11–3776–001.

Applicants: Southwest Power Pool, Inc.

Description: Southwest Power Pool, Inc. submits tariff filing per 35.17(b): Amendment to KCPL and KCPL–GMO Depreciation Rates to be effective 6/4/2011.

Filed Date: 06/17/2011.

Accession Number: 20110617–5109.

Comment Date: 5 p.m. Eastern Time on Friday, July 08, 2011.

Docket Numbers: ER11–3821–000.
Applicants: Glacial Energy of New York.
Description: Glacial Energy of New York submits tariff filing per 35: Substitute Market-Based Rate Tariff to be effective 5/13/2011.
Filed Date: 06/17/2011.
Accession Number: 20110617–5135.
Comment Date: 5 p.m. Eastern Time on Friday, July 08, 2011.

Docket Numbers: ER11–3822–000.
Applicants: Glacial Energy of New England, Inc.
Description: Glacial Energy of New England, Inc. submits tariff filing per 35: Substitute Market-Based Rate Tariff to be effective 5/13/2011.
Filed Date: 06/17/2011.
Accession Number: 20110617–5137.
Comment Date: 5 p.m. Eastern Time on Friday, July 08, 2011.

Docket Numbers: ER11–3823–000.
Applicants: Glacial Energy of New Jersey, Inc.
Description: Glacial Energy of New Jersey, Inc. submits tariff filing per 35: Substitute Market-Based Rate Tariff to be effective 5/13/2011.
Filed Date: 06/17/2011.
Accession Number: 20110617–5139.
Comment Date: 5 p.m. Eastern Time on Friday, July 08, 2011.

Docket Numbers: ER11–3824–000.
Applicants: Glacial Energy of Illinois, Inc.
Description: Glacial Energy of Illinois, Inc. submits tariff filing per 35: Substitute Market-Based Rate Tariff to be effective 5/13/2011.
Filed Date: 06/17/2011.
Accession Number: 20110617–5142.
Comment Date: 5 p.m. Eastern Time on Friday, July 08, 2011.

Docket Numbers: ER11–3825–000.
Applicants: Glacial Energy of California, Inc.
Description: Glacial Energy of California, Inc. submits tariff filing per 35: Substitute Market-Based Rate Tariff to be effective 5/13/2011.
Filed Date: 06/17/2011.
Accession Number: 20110617–5146.
Comment Date: 5 p.m. Eastern Time on Friday, July 08, 2011.

Take notice that the Commission received the following electric securities filings:

Docket Numbers: ES11–36–000.
Applicants: The United Illuminating Company.
Description: Response to Second FERC Staff Informal Request and Renewed Request for Expedited Treatment of The United Illuminating Company.
Filed Date: 06/17/2011.
Accession Number: 20110617–5151.
Comment Date: 5 p.m. Eastern Time on Monday, June 27, 2011.

Any person desiring to intervene or to protest in any of the above proceedings must file in accordance with Rules 211 and 214 of the Commission's Rules of Practice and Procedure (18 CFR 385.211 and 385.214) on or before 5 p.m. Eastern time on the specified comment date. It is not necessary to separately intervene again in a subdocket related to a compliance filing if you have previously intervened in the same docket. Protests will be considered by the Commission in determining the appropriate action to be taken, but will not serve to make protestants parties to the proceeding. Anyone filing a motion to intervene or protest must serve a copy of that document on the Applicant. In reference to filings initiating a new proceeding, interventions or protests submitted on or before the comment deadline need not be served on persons other than the Applicant.

As it relates to any qualifying facility filings, the notices of self-certification [or self-recertification] listed above, do not institute a proceeding regarding qualifying facility status. A notice of self-certification [or self-recertification] simply provides notification that the entity making the filing has determined the facility named in the notice meets the applicable criteria to be a qualifying facility. Intervention and/or protest do not lie in dockets that are qualifying facility self-certifications or self-recertifications. Any person seeking to challenge such qualifying facility status may do so by filing a motion pursuant to 18 CFR 292.207(d)(iii). Intervention and protests may be filed in response to notices of qualifying facility dockets other than self-certifications and self-recertifications.

The Commission encourages electronic submission of protests and interventions in lieu of paper, using the FERC Online links at *http://www.ferc.gov.* To facilitate electronic service, persons with Internet access who will eFile a document and/or be listed as a contact for an intervenor must create and validate an eRegistration account using the eRegistration link. Select the eFiling link to log on and submit the intervention or protests.

Persons unable to file electronically should submit an original and 14 copies of the intervention or protest to the Federal Energy Regulatory Commission, 888 First St., NE., Washington, DC 20426.

The filings in the above proceedings are accessible in the Commission's eLibrary system by clicking on the appropriate link in the above list. They are also available for review in the Commission's Public Reference Room in Washington, DC. There is an eSubscription link on the Web site that enables subscribers to receive e-mail notification when a document is added to a subscribed docket(s). For assistance with any FERC Online service, please e-mail *FERCOnlineSupport@ferc.gov.* or call (866) 208–3676 (toll free). For TTY, call (202) 502–8659.

Dated: June 20, 2011.

Nathaniel J. Davis, Sr.,

Deputy Secretary.

[FR Doc. 2011–15812 Filed 6–23–11; 8:45 am]

BILLING CODE 6717–01–P

DEPARTMENT OF ENERGY

Federal Energy Regulatory Commission

[Docket No. DI11–9–000]

Inside Passage Electric Cooperative; Notice of Declaration of Intention and Soliciting Comments, Protests, and/or Motions To Intervene

Take notice that the following application has been filed with the Commission and is available for public inspection:

a. *Application Type:* Declaration of Intention.
b. *Docket No.:* DI11–9–000.
c. *Date Filed:* June 13, 2011.
d. *Applicant:* Inside Passage Electric Cooperative.
e. *Name of Project:* Water Supply Creek Hydroelectric Project.
f. *Location:* The proposed Water Supply Creek Hydroelectric Project will be located on Water Supply Creek, near the town of Hoonah on Chichagof Island, Alaska, affecting T. 44 S., R. 61 E., secs. 2, 11, 14, and 15., and T. 43 S., R. 61 E., secs. 34 and 35, Copper River Meridian.
g. *Filed Pursuant to:* Section 23(b)(1) of the Federal Power Act, 16 U.S.C. 817(b).
h. *Applicant Contact:* Peter A. Bibb, Operations, P.O. Box 210149, 12480 Mendenhall Loop Road, Auke Bay, AK 99821, telephone: (907) 789–3196, ext. 30; Fax: (907) 790–8517; e-mail: *http://www.pbibb@ak.net.*
i. *FERC Contact:* Any questions on this notice should be addressed to Henry Ecton, (202) 502–8768, or e-mail address: *henry.ecton@ferc.gov.*
j. *Deadline for filing comments, protests, and/or motions:* July 27, 2011.

All documents should be filed electronically via the Internet. See 18

CFR 385.2001(a)(1)(iii) and the instructions on the Commission's Web site at *http://www.ferc.gov/docs-filing/efiling.asp.* If unable to be filed electronically, documents may be paper-filed. To paper-file, an original and seven copies should be filed with: Secretary, Federal Energy Regulatory Commission, 888 First Street, NE., Washington, DC 20426.

Commenters can submit brief comments up to 6,000 characters, without prior registration, using the eComment system at *http://www.ferc.gov/docs-filing/ecomment.asp.* Please include the docket number (DI11–9–000) on any comments, protests, and/or motions filed.

k. *Description of Project:* The proposed run-of-river Water Supply Creek Hydroelectric Project will consist of: (1) A proposed 8-foot-high, 60-foot-wide diversion structure with a concrete core wall and grouted riprap embankments; (2) a proposed 20-foot-wide, 20-foot-long concrete intake structure, with a low-level outlet to release flows into the bypass reach of Water Supply Creek; (3) a 20-inch diameter, 5,100-foot-long steel penstock, with the final 3,300 feet of the penstock buried with a minimum of 4-foot of cover; (4) a 36-foot-long, 24-foot-wide, 15-foot-high powerhouse, containing a single horizontal axis Turgo turbine and induction generation with a rated capacity of 400 kW; (5) a 15-foot-long tailrace returning flows into Water Supply Creek; (6) a proposed 4.25-mile-long 12.5-kV transmission line; and (7) appurtenant facilities.

When a Declaration of Intention is filed with the Federal Energy Regulatory Commission, the Federal Power Act requires the Commission to investigate and determine if the interests of interstate or foreign commerce would be affected by the proposed project. The Commission also determines whether or not the project: (1) Would be located on a navigable waterway; (2) would occupy or affect public lands or reservations of the United States; (3) would utilize surplus water or water power from a government dam; or (4) if applicable, has involved or would involve any construction subsequent to 1935 that may have increased or would increase the project's head or generating capacity, or have otherwise significantly modified the project's pre-1935 design or operation.

l. *Locations of the Application:* Copies of this filing are on file with the Commission and are available for public inspection. This filing may be viewed on the Web at *http://www.ferc.gov* using the ''eLibrary'' link. Enter the docket number excluding the last three digits in the docket number field to access the document. You may also register online at *http://www.ferc.gov/docs-filing/esubscription.asp* to be notified via e-mail of new filings and issuances related to this or other pending projects. For assistance, please contact FERC Online Support at *FERCOnlineSupport@ferc.gov* or toll-free at (866) 208–3676, or TTY, contact (202) 502–8659. A copy is also available for inspection and reproduction at the address in item (h) above.

m. Individuals desiring to be included on the Commission's mailing list should so indicate by writing to the Secretary of the Commission.

n. *Comments, Protests, or Motions To Intervene*—Anyone may submit comments, a protest, or a motion to intervene in accordance with the requirements of Rules of Practice and Procedure, 18 CFR 385.210, .211, .214. In determining the appropriate action to take, the Commission will consider all protests or other comments filed, but only those who file a motion to intervene in accordance with the Commission's Rules may become a party to the proceeding. Any comments, protests, or motions to intervene must be received on or before the specified comment date for the particular application.

o. *Filing and Service of Responsive Documents*—Any filings must bear in all capital letters the title ''COMMENTS'', ''PROTESTS'', AND/OR ''MOTIONS TO INTERVENE'', as applicable, and the Docket Number of the particular application to which the filing refers. A copy of any motion to intervene must also be served upon each representative of the Applicant specified in the particular application.

p. *Agency Comments*—Federal, State, and local agencies are invited to file comments on the described application. A copy of the application may be obtained by agencies directly from the Applicant. If an agency does not file comments within the time specified for filing comments, it will be presumed to have no comments. One copy of an agency's comments must also be sent to the Applicant's representatives.

Dated: June 20, 2011.

Kimberly D. Bose,

Secretary.

[FR Doc. 2011–15856 Filed 6–23–11; 8:45 am]

BILLING CODE 6717–01–P

DEPARTMENT OF ENERGY

Federal Energy Regulatory Commission

[Docket No. CP11–18–000]

Transcontinental Gas Pipe Line Company, LLC; Notice of Availability of the Environmental Assessment for the Proposed Mid-South Expansion Project

The staff of the Federal Energy Regulatory Commission (FERC or Commission) has prepared an environmental assessment (EA) for the Mid-South Expansion Project proposed by Transcontinental Gas Pipe Line Company, LLC (Transco) in the above-referenced docket. Transco requests authorization to construct and operate five new pipeline loops,[1] construct one new compressor station, add compression at two existing compressor stations, and perform other modifications to five compressor stations. The MSEP would provide about 451 million standard cubic feet of natural gas per day to Transco's existing mainline system from the Clean Energy LNG import terminal currently under construction in Pascagoula, Mississippi, with existing capacity on Transco's Mobile Bay Lateral, down to existing Compressor Station 85. According to Transco, its project would expand delivery capacity on its existing pipeline system to growing markets in the east as far downstream as Rockingham County, North Carolina.

The EA assesses the potential environmental effects of the construction and operation of the Mid-South Expansion Project in accordance with the requirements of the National Environmental Policy Act of 1969 (NEPA). The FERC staff concludes that approval of the proposed project, with appropriate mitigating measures, would not constitute a major Federal action significantly affecting the quality of the human environment.

The proposed Mid-South Expansion Project includes the following facilities:

- Five pipeline loops located in Coosa and Randolph Counties, Alabama, and Gaston, Rowan and Davidson Counties, North Carolina;
- One new compressor station, Station 95, to be located in Dallas County, Alabama;
- Additional new compression at two existing compressor stations:
  - Station 90 in Marengo County, Alabama; and
  - Station 125 in Walton County, Georgia;

[1] A pipeline loop is constructed parallel to an existing pipeline to increase capacity.

• Modifications at the following existing compressor stations:

○ Station 105 in Coosa County, Alabama;

○ Station 115 in Coweta County, Georgia;

○ Station 120 in Henry County, Georgia;

○ Station 140 in Spartanburg County, South Carolina; and

○ Station 145 in Cleveland County, North Carolina.

The planned loops would be constructed with 42-inch-diameter steel pipe and would have a combined total length of about 22.6 miles.

The EA has been placed in the public files of the FERC and is available for public viewing on the FERC's Web site at *http://www.ferc.gov* using the eLibrary link. A limited number of copies of the EA are available for distribution and public inspection at: Federal Energy Regulatory Commission, Public Reference Room, 888 First Street, NE., Room 2A, Washington, DC 20426, (202) 502–8371.

Copies of the EA have been mailed to Federal, State, and local government representatives and agencies; elected officials; environmental and public interest groups; Native American tribes; potentially affected landowners and other interested individuals and groups; newspapers and libraries in the project area; and parties to this proceeding.

Any person wishing to comment on the EA may do so. Your comments should focus on the potential environmental effects, reasonable alternatives, and measures to avoid or lessen environmental impacts. The more specific your comments, the more useful they will be. To ensure that your comments are properly recorded and considered prior to a Commission decision on the proposal, it is important that the FERC receives your comments in Washington, DC on or before July 20, 2011.

For your convenience, there are three methods you can use to submit your comments to the Commission. In all instances, please reference the project docket number (CP11–18–000) with your submission. The Commission encourages electronic filing of comments and has dedicated eFiling expert staff available to assist you at (202) 502–8258 or *efiling@ferc.gov.*

(1) You may file your comments electronically by using the *eComment* feature, which is located on the Commission's Web site at *http://www.ferc.gov* under the link to *Documents and Filings.* An eComment is an easy method for interested persons to submit brief, text-only comments on a project;

(2) You may file your comments electronically by using the *eFiling* feature, which is located on the Commission's Web site at *http://www.ferc.gov* under the link to *Documents and Filings.* With eFiling, you can provide comments in a variety of formats by attaching them as a file with your submission. New eFiling users must first create an account by clicking on ''*eRegister.*'' You will be asked to select the type of filing you are making. A comment on a particular project is considered a ''Comment on a Filing''; or

(3) You may file a paper copy of your comments at the following address: Kimberly D. Bose, Secretary, Federal Energy Regulatory Commission, 888 First Street, NE., Room 1A, Washington, DC 20426.

Although your comments will be considered by the Commission, simply filing comments will not serve to make the commenter a party to the proceeding. Any person seeking to become a party to the proceeding must file a motion to intervene pursuant to Rule 214 of the Commission's Rules of Practice and Procedures (18 CFR 385.214).[2] Only intervenors have the right to seek rehearing of the Commission's decision.

Affected landowners and parties with environmental concerns may be granted intervenor status upon showing good cause by stating that they have a clear and direct interest in this proceeding which would not be adequately represented by any other parties. *You do not need intervenor status to have your comments considered.*

Additional information about the project is available from the Commission's Office of External Affairs, at (866) 208–FERC or on the FERC Web site (*http://www.ferc.gov*) using the eLibrary link. Click on the eLibrary link, click on ''General Search'' and enter the docket number excluding the last three digits in the Docket Number field (*i.e.,* CP11–18–000). Be sure you have selected an appropriate date range. For assistance, please contact FERC Online Support at *FercOnlineSupport@ferc.gov* or toll free at (866) 208–3676, or for TTY, contact (202) 502–8659. The eLibrary link also provides access to the texts of formal documents issued by the Commission, such as orders, notices, and rulemakings.

In addition, the Commission offers a free service called eSubscription which allows you to keep track of all formal issuances and submittals in specific dockets. This can reduce the amount of time you spend researching proceedings by automatically providing you with notification of these filings, document summaries, and direct links to the documents. Go to *http://www.ferc.gov/esubscribenow.htm.*

Dated: June 20, 2011.

Kimberly D. Bose,

Secretary.

[FR Doc. 2011–15857 Filed 6–23–11; 8:45 am]

BILLING CODE 6717–01–P

[2] Interventions may also be filed electronically via the Internet in lieu of paper. See the previous discussion on filing comments electronically.

DEPARTMENT OF ENERGY

Federal Energy Regulatory Commission

[Docket No. ER11–3808–000]

ORNI 39 LLC;Supplemental Notice That Initial Market-Based Rate Filing Includes Request for Blanket Section 204 Authorization

This is a supplemental notice in the above-referenced proceeding of ORNI 39 LLC's application for market-based rate authority, with an accompanying rate tariff, noting that such application includes a request for blanket authorization, under 18 CFR part 34, of future issuances of securities and assumptions of liability.

Any person desiring to intervene or to protest should file with the Federal Energy Regulatory Commission, 888 First Street, NE., Washington, DC 20426, in accordance with Rules 211 and 214 of the Commission's Rules of Practice and Procedure (18 CFR 385.211 and 385.214). Anyone filing a motion to intervene or protest must serve a copy of that document on the Applicant.

Notice is hereby given that the deadline for filing protests with regard to the applicant's request for blanket authorization, under 18 CFR part 34, of future issuances of securities and assumptions of liability, is July 11, 2011.

The Commission encourages electronic submission of protests and interventions in lieu of paper, using the FERC Online links at *http://www.ferc.gov.* To facilitate electronic service, persons with Internet access who will eFile a document and/or be listed as a contact for an intervenor must create and validate an eRegistration account using the eRegistration link. Select the eFiling link to log on and submit the intervention or protests.

Persons unable to file electronically should submit an original and 14 copies of the intervention or protest to the Federal Energy Regulatory Commission,

888 First Street, NE., Washington, DC 20426.

The filings in the above-referenced proceeding are accessible in the Commission's eLibrary system by clicking on the appropriate link in the above list. They are also available for review in the Commission's Public Reference Room in Washington, DC. There is an eSubscription link on the Web site that enables subscribers to receive e-mail notification when a document is added to a subscribed docket(s). For assistance with any FERC Online service, please e-mail *FERCOnlineSupport@ferc.gov* or call (866) 208–3676 (toll free). For TTY, call (202) 502–8659.

Dated: June 20, 2011.

Kimberly D. Bose,

Secretary.

[FR Doc. 2011–15859 Filed 6–23–11; 8:45 am]

BILLING CODE 6717–01–P

ENVIRONMENTAL PROTECTION AGENCY

[EPA–HQ–OPPT–2003–0004; FRL–8879–4]

Access to Confidential Business Information by Computer Sciences Corporation and Its Identified Subcontractors

AGENCY: Environmental Protection Agency (EPA).

ACTION: Notice.

SUMMARY: EPA has authorized its contractor, Computer Sciences Corporation of Chantilly, VA and Its Identified Subcontractors, to access information which has been submitted to EPA under all sections of the Toxic Substances Control Act (TSCA). Some of the information may be claimed or determined to be Confidential Business Information (CBI).

DATES: Access to the confidential data will occur no sooner than July 1, 2011.

FOR FURTHER INFORMATION CONTACT: *For technical information contact:* Pamela Moseley, Information Management Division (7407M), Office of Pollution Prevention and Toxics, Environmental Protection Agency, 1200 Pennsylvania Ave., NW., Washington, DC 20460–0001; *telephone number:* (202) 564–8956; *fax number:* (202) 564–8955; *e-mail address: moseley.pamela@epa.gov.*

For general information contact: The TSCA-Hotline, ABVI-Goodwill, 422 South Clinton Ave., Rochester, NY 14620; *telephone number:* (202) 554–1404; *e-mail address: TSCA-Hotline@epa.gov.*

SUPPLEMENTARY INFORMATION:

I. General Information

A. Does this notice apply to me?

This action is directed to the public in general. This action may, however, be of interest to all who manufacture, process, or distribute industrial chemicals. Since other entities may also be interested, the Agency has not attempted to describe all the specific entities that may be affected by this action. If you have any questions regarding the applicability of this action to a particular entity, consult the technical person listed under **FOR FURTHER INFORMATION CONTACT**.

B. How can I get copies of this document and other related information?

EPA has established a docket for this action under docket identification (ID) number EPA–HQ–OPPT–2003–0004. All documents in the docket are listed in the docket index available at *http://www.regulations.gov.* Although listed in the index, some information is not publicly available, *e.g.,* CBI or other information whose disclosure is restricted by statute. Certain other material, such as copyrighted material, will be publicly available only in hard copy. Publicly available docket materials are available electronically at *http://www.regulations.gov,* or, if only available in hard copy, at the OPPT Docket. The OPPT Docket is located in the EPA Docket Center (EPA/DC) at Rm. 3334, EPA West Bldg., 1301 Constitution Ave., NW., Washington, DC. The EPA/DC Public Reading Room hours of operation are 8:30 a.m. to 4:30 p.m., Monday through Friday, excluding legal holidays. The telephone number of the EPA/DC Public Reading Room is (202) 566–1744, and the telephone number for the OPPT Docket is (202) 566–0280. Docket visitors are required to show photographic identification, pass through a metal detector, and sign the EPA visitor log. All visitor bags are processed through an X-ray machine and subject to search. Visitors will be provided an EPA/DC badge that must be visible at all times in the building and returned upon departure.

II. What action is the agency taking?

Under EPA contract number GS–35F–4381G, Task Order Number 1661, contractor CSC of 15000 Conference Center Drive, Chantilly, VA; and Its Identified Subcontractors, Blue Canopy of 11710 Plaza America Drive, Suite 950, Reston, VA; Excel Systems Consultants of 691 N. High Street, 2nd Floor, Columbus, OH; KForce, Inc. of 12010 Sunset Hills Rd, Suite 200, Herndon, VA; and TEK Systems of 7437 Race Road, 2nd Floor, Hanover, MD will assist the Office of Pollution Prevention and Toxics (OPPT) in providing support for operations and maintenance for TSCA CBI Areas.

In accordance with 40 CFR 2.306(j), EPA has determined that under EPA contract number GS–35F–4381G, Task Order Number 1661, CSC and Its Identified Subcontractors will require access to CBI under all sections of TSCA to perform successfully the duties specified under the contract. CSC and Its Identified Subcontractors' personnel will be given access to information submitted to EPA under all sections of TSCA. Some of the information may be claimed or determined to be CBI.

EPA is issuing this notice to inform all submitters of information under all sections of TSCA that EPA may provide CSC and Its Identified Subcontractors access to these CBI materials on a need-to-know basis only. All access to TSCA CBI under this contract will take place at EPA Headquarters and the Research Triangle Park's site located in RTP, NC, in accordance with EPA's *TSCA CBI Protection Manual.*

Access to TSCA data, including CBI, will continue until September 30, 2016. If the contract is extended, this access will also continue for the duration of the extended contract without further notice.

CSC and Its Identified Subcontractors' personnel will be required to sign nondisclosure agreements and will be briefed on appropriate security procedures before they are permitted access to TSCA CBI.

List of Subjects

Environmental protection, Confidential business information.

Dated: June 20, 2011.

Mario Carabillo,

Acting Director, Information Management Division, Office of Pollution Prevention and Toxics.

[FR Doc. 2011–15886 Filed 6–23–11; 8:45 am]

BILLING CODE 6560–50–P

ENVIRONMENTAL PROTECTION AGENCY

[ER–FRL–8997–6]

Environmental Impacts Statements; Notice of Availability

Responsible Agency: Office of Federal Activities, General Information (202) 564–1399 or *http://www.epa.gov/compliance/nepa/.*

Weekly receipt of Environmental Impact Statements

Filed 06/13/2011 Through 06/17/2011
Pursuant to 40 CFR 1506.9.

Notice

In accordance with Section 309(a) of the Clean Air Act, EPA is required to make its comments on EISs issued by other Federal agencies public. Historically, EPA met this mandate by publishing weekly notices of availability of EPA comments, which includes a brief summary of EPA's comment letters, in the **Federal Register**. Since February 2008, EPA has included its comment letters on EISs on its Web site at: *http://www.epa.gov/compliance/nepa/eisdata.html.* Including the entire EIS comment letters on the Web site satisfies the Section 309(a) requirement to make EPA's comments on EISs available to the public. Accordingly, on March 31, 2010, EPA discontinued the publication of the notice of availability of EPA comments in the **Federal Register**.

EIS No. 20110188, Draft EIS, FHWA, TX, TX–99/Grand Parkway Improvement Project, Segment H and I–1, from United States Highway (US) 59 (N) to Interstate Highway (IH) 10 (E), Transportation Improvement, Right-of-Way Permit, Montgomery, Harris, Liberty and Chambers Counties, TX, Comment Period Ends: 09/21/2011, Contact: Daniel Mott 512–536–5964.

EIS No. 20110189, Draft EIS, USFS, MO, Integrated Non-Native Plant Control Project, Proposes a Forest-Wide Integrated Management Strategy to Control the Spread of Non-Native Invasive Plant Species (NNIP), Mark Twain National Forest in Portions of Barry, Bellinger, Boone, Butler, Callaway, Carter, Christian, Crawford, Dent, Douglas, Howell, Iron, Laclede, Madison, Oregon, Ozark, Phelps, Pulaski, Reynolds, Ripley, Shannon, Ste. Genevieve, St. Francois, Stone, Taney, Texas, Washington, Wayne and Wright Counties, MO, Comment Period Ends: 08/08/2011, Contact: Becky Bryan 573–341–7436.

EIS No. 20110190, Draft EIS, FRA, MS, Tupelo Railroad Relocation Planning and Environmental Study, To Improve Mobility and Safety by Reducing Roadway Congestion, City of Tupelo, MS, Comment Period Ends: 08/08/2011, Contact: John Winkle 202–493–6067.

EIS No. 20110191, Draft EIS, BPA, WA, Mid-Columbia Coho Restoration Program. Proposes to Fund the Construction Operation and Maintenance of the Program to help Mitigate for Anadromous Fish, Okanogan Counties, WA, Comment Period Ends: 08/08/2011, Contact: Stephanie Breeden 503–230–5192.

EIS No. 20110192, Draft EIS, USFS, NC, Uwharrie National Forest, Proposed Land and Resource Management Resource Plan, Implementation, Montgomery, Randolph and Davidson Counties, NC, Comment Period Ends: 09/21/2011, Contact: Ruth Berner 823–257–4862.

EIS No. 20110193, Final EIS, USAF, FL, Eglin Air Force Base (AFB) and Hurlburt Field, Proposes to Implement the Military Housing Privatization Initiative (MHPI), FL, Review Period Ends: 07/25/2011, Contact: Mike Spaits 850–882–2836.

EIS No. 20110194, Draft EIS, USACE, LA, Louisiana Coastal Area Barataria Basin Barrier Shoreline Restoration, To Restore the Barrier Shoreline Ecosystem and Significantly Reduce the Loss of Estuarine and Freshwater Wetlands, Caminada Headland in Lafourche and Jefferson Parishes and Shell Islands in Plaguemines Parish, LA, Comment Period Ends: 08/08/2011, Contact: Dr. William P. Klein, Jr. 504–862–2540.

EIS No. 20110195, Draft EIS, BOP, 00, Criminal Alien Requirement (CAR) 12 Procurement Project, To Award a Contract to House a Population of Approximately 1,750 Federal, Low-Security Adult Male Criminal Alien in a Contractor Owned and Operated Facility, Possible Site Selection: McRae Correctional Facility, McRae, Georgia, Great Plains Correctional Facility, Hinton, Oklahoma and Scott County, Mississippi, Comment Period Ends: 08/08/2011, Contact: Richard A. Cohn 202–514–6470.

EIS No. 20110196, Final Supplement, USACE, LA, New Orleans To Venice (NOV), Federal Hurricane Protection Levee. Restoring, Armoring and Accelerating the Completion of the Existing NOV, Plaquemines Parish, LA, Review Period Ends: 07/25/2011, Contact: Christopher Koeppel 601–631–5410

EIS No. 20110197, Final EIS, NRC, AK, Lost Creek In-Situ Uranium Recovery (ISR) Project, Proposal to Construct, Operate, Conduit Aquifer Restoration, and Decommission an In-Situ Recovery (ISR) Uranium Milling Facility, Sweetwater County, WY, Review Period Ends: 07/25/2011, Contact: Alan B. Bjornsen 301–415–1195.

EIS No. 20110198, Final EIS, NHTSA, 00, Medium-and Heavy-Duty Fuel Efficiency Improvement Program, Proposing Coordinated and Harmonized Fuel Consumption and Greenhouse Gas (GHG) Emissions Standards, United States, Review Period Ends: 07/25/2011, Contact: Angel Jackson 202–366–0154.

Amended Notices

EIS No. 20110117, Final EIS, BLM, CA, First Solar Desert Sunlight Solar Farm (DSSF) Project, Proposing To Develop a 550-Megawatt Photovoltaic Solar Project, Also Proposes to Facilitate the Construction and Operation of the Red Bluff Substation, California Desert Conservation Area (CDCA Plan, Riverside County, CA, Contact: Allison Shaffer 760–833–7104 The U.S. Department of Energy, has ADOPTED the U.S. Department of Interior, Bureau of Land Management FEIS #20110117, filed on 04/08/2011. DOE was a Cooperating Agency for the above project. Recirculation of the FEIS is not necessary under 40 CFR 1506.3(c).

Dated: June 21, 2011.

Cliff Rader,

Acting Director, NEPA Compliance Division, Office of Federal Activities.

[FR Doc. 2011–15887 Filed 6–23–11; 8:45 am]

BILLING CODE 6560–50–P

ENVIRONMENTAL PROTECTION AGENCY

[FRL–9324–2]

National Advisory Council for Environmental Policy and Technology

AGENCY: Environmental Protection Agency (EPA).

ACTION: Notice of meeting.

SUMMARY: Under the Federal Advisory Committee Act, Public Law 92463, EPA gives notice of a public teleconference of the National Advisory Council for Environmental Policy and Technology (NACEPT). NACEPT provides advice to the EPA Administrator on a broad range of environmental policy, technology, and management issues. NACEPT represents diverse interests from academia, industry, non-governmental organizations, and local, state, and tribal governments. The purpose of this meeting is to discuss and approve NACEPT's Second Advice Letter on EPA Workforce Planning: *Leadership Capabilities and Culture for ''One EPA'' and Strategies to Obtain and Retain Scientific and Technical Expertise.* A copy of the agenda for the meeting will be posted at *http://www.epa.gov/ofacmo/nacept/cal-nacept.htm.*

DATES: NACEPT will hold a public teleconference on Monday, July 11, 2011, from 11 a.m.–12:30 p.m. Eastern Daylight Time.

ADDRESSES: The meeting will be held in the U.S. EPA East Building, 1201 Constitution Ave., NW., Room 1132, Washington, DC 20004.

FOR FURTHER INFORMATION CONTACT: Megan Moreau, Acting Designated Federal Officer, *moreau.megan@epa.gov,* (202) 564–5320, U.S. EPA, Office of Federal Advisory Committee Management and Outreach (1601M), 1200 Pennsylvania Avenue, NW, Washington, DC 20460.

SUPPLEMENTARY INFORMATION: Requests to make oral comments or to provide written comments to NACEPT should be sent to Megan Moreau, Acting Designated Federal Officer, at the contact information above by Wednesday, July 6, 2011. The public is welcome to attend all portions of the meeting, but seating is limited and is allocated on a first-come, first-serve basis. Members of the public wishing to gain access to the conference room on the day of the meeting must contact Megan Moreau at (202) 564–5320 or *moreau.megan@epa.gov* by July 6, 2011.

Meeting Access: For information on access or services for individuals with disabilities, please contact Megan Moreau at (202) 564–5320 or *moreau.megan@epa.gov.* To request accommodation of a disability, please contact Megan Moreau, preferably at least 10 days prior to the meeting, to give EPA as much time as possible to process your request.

Dated: June 20, 2011.

Megan Moreau,

Acting Designated Federal Officer.

[FR Doc. 2011–15948 Filed 6–23–11; 8:45 am]

BILLING CODE 6560–50–P

FEDERAL COMMUNICATIONS COMMISSION

Information Collections Being Submitted for Review and Approval to the Office of Management and Budget

AGENCY: Federal Communications Commission.

ACTION: Notice and request for comments.

SUMMARY: The Federal Communications Commission (FCC), as part of its continuing effort to reduce paperwork burdens, invites the general public and other Federal agencies to take this opportunity to comment on the following information collection, as required by the Paperwork Reduction Act (PRA) of 1995. An agency may not conduct or sponsor a collection of information unless it displays a currently valid control number. No person shall be subject to any penalty for failing to comply with a collection of information subject to the PRA that does not display a valid control number. Comments are requested concerning (a) Whether the proposed collection of information is necessary for the proper performance of the functions of the Commission, including whether the information shall have practical utility; (b) the accuracy of the Commission's burden estimate; (c) ways to enhance the quality, utility, and clarity of the information collected; (d) ways to minimize the burden of the collection of information on the respondents, including the use of automated collection techniques or other forms of information technology; and (e) ways to further reduce the information collection burden on small business concerns with fewer than 25 employees.

The FCC may not conduct or sponsor a collection of information unless it displays a currently valid control number. No person shall be subject to any penalty for failing to comply with a collection of information subject to the PRA that does not display a valid Office of Management and Budget (OMB) control number.

DATES: Written comments should be submitted on or before July 25, 2011. If you anticipate that you will be submitting comments, but find it difficult to do so within the period of time allowed by this notice, you should advise the contacts below as soon as possible.

ADDRESSES: Direct all PRA comments to Nicholas A. Fraser, OMB, via fax 202–395–5167, or via e-mail *Nicholas_A._Fraser@omb.eop.gov;* and to Cathy Williams, FCC, via e-mail *PRA@fcc.gov* and to *Cathy.Williams@fcc.gov.* Include in the comments the OMB control number as shown in the **SUPPLEMENTARY INFORMATION** section below.

FOR FURTHER INFORMATION CONTACT: For additional information or copies of the information collection, contact Cathy Williams at (202) 418–2918. To view a copy of this information collection request (ICR) submitted to OMB: (1) Go to the Web page *http://www.reginfo.gov/public/do/PRAMain,* (2) look for the section of the Web page called ''Currently Under Review,'' (3) click on the downward-pointing arrow in the ''Select Agency'' box below the ''Currently Under Review'' heading, (4) select ''Federal Communications Commission'' from the list of agencies presented in the ''Select Agency'' box, (5) click the ''Submit'' button to the right of the ''Select Agency'' box, (6) when the list of FCC ICRs currently under review appears, look for the OMB control number of this ICR and then click on the ICR Reference Number. A copy of the FCC submission to OMB will be displayed.

SUPPLEMENTARY INFORMATION:

OMB Control Number: 3060–0795.

Title: Associated WTB and/or PSHSB Call Signs and Antenna Structure Registration Numbers with Licensee's FRN.

Form No.: FCC Form 606.

Type of Review: Extension of a currently approved collection.

Respondents: Individuals or households, business or other for-profit, not-for-profit institutions, and State, local or Tribal government.

Number of Respondents: 43,000 respondents; 43,000 responses.

Estimated Time per Response: .25 hours.

Frequency of Response: On occasion reporting requirement and third party disclosure requirement.

Obligation to Respond: Required to obtain or retain benefits. Statutory authority for this information collection is contained in Debt Collection Improvement Act of 1996 (DCIA).

Total Annual Burden: 10,750 hours.

Total Annual Cost: N/A.

Privacy Act Impact Assessment: Yes. Records may include information about individuals or households, *e.g.,* personally identifiable information or PII, and the use(s) and disclosure of this information is governed by the requirements of a system of records notice or 'SORN', FCC/WTB–1, ''Wireless Services Licensing Records.'' There are no additional impacts under the Privacy Act.

Nature and Extent of Confidentiality: In general, there is no need for confidentiality. On a case-by-case basis, the Commission may be required to withhold from public disclosure certain information about the location, character, or ownership of a historic property, including traditional religious sites.

Needs and Uses: The Commission will submit this expiring information collection to the Office of Management and Budget (OMB) after this 60-day comment period in order to obtain the full three year clearance from them. The Commission is requesting OMB approval for an extension (no change in the reporting and/or third party disclosure requirements).

Licensees use FCC Form 606 to associate their FCC Registration Number (FRN) with their Wireless Telecommunications Bureau and/or Public Safety and Homeland Security Bureau call signs and antenna structure

registration numbers. The form must be submitted before filing any subsequent applications associated with the existing license or antenna structure registration that is not associated with an FCC Registration Number (FRN).

The information collected in the FCC Form 606 is used to populate the Universal Licensing System (ULS) with the FRNs of licensees and antenna structure registration owners who interact with ULS.

Federal Communications Commission.

Marlene H. Dortch,

Secretary, Office of the Secretary, Office of Managing Director.

[FR Doc. 2011–15766 Filed 6–23–11; 8:45 am]

BILLING CODE 6712–01–P

FEDERAL RESERVE SYSTEM

Federal Open Market Committee; Domestic Policy Directive of April 26–27, 2011

In accordance with Section 271.25 of its rules regarding availability of information (12 CFR part 271), there is set forth below the domestic policy directive issued by the Federal Open Market Committee at its meeting held on April 26–27, 2011.[1]

The Federal Open Market Committee seeks monetary and financial conditions that will foster price stability and promote sustainable growth in output. To further its long-run objectives, the Committee seeks conditions in reserve markets consistent with federal funds trading in a range from 0 to ¼ percent. The Committee directs the Desk to execute purchases of longer-term Treasury securities in order to increase the total face value of domestic securities held in the System Open Market Account to approximately $2.6 trillion by the end of June 2011. The Committee also directs the Desk to reinvest principal payments from agency debt and agency mortgage-backed securities in longer-term Treasury securities. The System Open Market Account Manager and the Secretary will keep the Committee informed of ongoing developments regarding the System's balance sheet that could affect the attainment over time of the Committee's objectives of maximum employment and price stability.

[1] Copies of the Minutes of the Federal Open Market Committee at its meeting held on April 26–27, 2011, which includes the domestic policy directive issued at the meeting, are available upon request to the Board of Governors of the Federal Reserve System, Washington, DC 20551. The minutes are published in the Federal Reserve Bulletin and in the Board's Annual Report.

By order of the Federal Open Market Committee, May 19, 2011.

William B. English,

Secretary, Federal Open Market Committee.

[FR Doc. 2011–15736 Filed 6–23–11; 8:45 am]

BILLING CODE 6210–01–P

FEDERAL RESERVE SYSTEM

Formations of, Acquisitions by, and Mergers of Bank Holding Companies

The companies listed in this notice have applied to the Board for approval, pursuant to the Bank Holding Company Act of 1956 (12 U.S.C. 1841 *et seq.*) (BHC Act), Regulation Y (12 CFR part 225), and all other applicable statutes and regulations to become a bank holding company and/or to acquire the assets or the ownership of, control of, or the power to vote shares of a bank or bank holding company and all of the banks and nonbanking companies owned by the bank holding company, including the companies listed below.

The applications listed below, as well as other related filings required by the Board, are available for immediate inspection at the Federal Reserve Bank indicated. The application also will be available for inspection at the offices of the Board of Governors. Interested persons may express their views in writing on the standards enumerated in the BHC Act (12 U.S.C. 1842(c)). If the proposal also involves the acquisition of a nonbanking company, the review also includes whether the acquisition of the nonbanking company complies with the standards in section 4 of the BHC Act (12 U.S.C. 1843). Unless otherwise noted, nonbanking activities will be conducted throughout the United States.

Unless otherwise noted, comments regarding each of these applications must be received at the Reserve Bank indicated or the offices of the Board of Governors not later than July 20, 2011.

A. Federal Reserve Bank of St. Louis (Glenda Wilson, Community Affairs Officer) P.O. Box 442, St. Louis, Missouri 63166–2034:

1. *Alton Bancshares, Inc., Alton, Missouri,* to acquire 100 percent of First Community Bank of the Ozarks, Branson, Missouri.

Board of Governors of the Federal Reserve System, June 21, 2011.

Robert deV. Frierson,

Deputy Secretary of the Board.

[FR Doc. 2011–15830 Filed 6–23–11; 8:45 am]

BILLING CODE 6210–01–P

DEPARTMENT OF HEALTH AND HUMAN SERVICES

Determination Concerning a Petition To Add a Class of Employees to the Special Exposure Cohort

AGENCY: National Institute for Occupational Safety and Health (NIOSH), Department of Health and Human Services (HHS).

ACTION: Notice.

SUMMARY: HHS gives notice of a determination concerning a petition to add a class of employees from the Linde Ceramics Plant in Tonawanda, New York, to the Special Exposure Cohort (SEC) under the Energy Employees Occupational Illness Compensation Program Act of 2000 (EEOICPA), 42 U.S.C. 7384q. On June 3, 2011, the Secretary of HHS determined that the following class of employees does not meet the statutory criteria for addition to the SEC as authorized under EEOICPA:

All Department of Energy employees and Atomic Weapons Employees who worked at the Linde Ceramics Plant in Tonawanda, New York, during the period from January 1, 1970 through July 31, 2006.

FOR FURTHER INFORMATION CONTACT: Stuart L. Hinnefeld, Director, Division of Compensation Analysis and Support, National Institute for Occupational Safety and Health (NIOSH), 4676 Columbia Parkway, MS C–46, Cincinnati, OH 45226, Telephone 1–877–222–7570. Information requests can also be submitted by e-mail to *DCAS@CDC.GOV.*

John Howard,

Director, National Institute for Occupational Safety and Health.

[FR Doc. 2011–15820 Filed 6–23–11; 8:45 am]

BILLING CODE 4163–19–P

DEPARTMENT OF HEALTH AND HUMAN SERVICES

Determination Concerning a Petition To Add a Class of Employees to the Special Exposure Cohort

AGENCY: National Institute for Occupational Safety and Health (NIOSH), Department of Health and Human Services (HHS).

ACTION: Notice.

SUMMARY: HHS gives notice of a determination concerning a petition to add a class of employees from the Dow Chemical Company in Madison, Illinois, to the Special Exposure Cohort (SEC) under the Energy Employees Occupational Illness Compensation

Program Act of 2000 (EEOICPA), 42 U.S.C. 7384q. On June 3, 2011, the Secretary of HHS determined that the following class of employees does not meet the statutory criteria for addition to the SEC as authorized under EEOICPA:

All Atomic Weapons Employees who worked at Dow Chemical Company in Madison, Illinois, from January 1, 1961 through November 30, 2007.

FOR FURTHER INFORMATION CONTACT: Stuart L. Hinnefeld, Director, Division of Compensation Analysis and Support, National Institute for Occupational Safety and Health (NIOSH), 4676 Columbia Parkway, MS C–46, Cincinnati, OH 45226, Telephone 1–877–222–7570. Information requests can also be submitted by e-mail to *DCAS@CDC.GOV.*

John Howard,

Director, National Institute for Occupational Safety and Health.

[FR Doc. 2011–15821 Filed 6–23–11; 8:45 am]

BILLING CODE 4163–19–P

DEPARTMENT OF HEALTH AND HUMAN SERVICES

Determination Concerning a Petition To Add a Class of Employees to the Special Exposure Cohort

AGENCY: National Institute for Occupational Safety and Health (NIOSH), Department of Health and Human Services (HHS).

ACTION: Notice.

SUMMARY: HHS gives notice of a determination concerning a petition to add a class of employees from the Chapman Valve Manufacturing Company (*i.e.,* Building 23 and Dean Street facility) in Indian Orchard, Massachusetts, to the Special Exposure Cohort (SEC) under the Energy Employees Occupational Illness Compensation Program Act of 2000 (EEOICPA), 42 U.S.C. 7384q. On June 3, 2011, the Secretary of HHS determined that the following class of employees does not meet the statutory criteria for addition to the SEC as authorized under EEOICPA:

All Atomic Weapons Employees who were monitored, or should have been monitored for radiological exposures while performing Atomic Energy Commission work at the Chapman Valve Manufacturing Company (*i.e.,* Building 23 and Dean Street facility) in Indian Orchard, Massachusetts, from January 1, 1948 through December 31, 1949, and from January 1, 1991 through December 31, 1993.

FOR FURTHER INFORMATION CONTACT: Stuart L. Hinnefeld, Director, Division of Compensation Analysis and Support, National Institute for Occupational Safety and Health (NIOSH), 4676 Columbia Parkway, MS C–46, Cincinnati, OH 45226, Telephone 1–877–222–7570. Information requests can also be submitted by e-mail to *DCAS@CDC.GOV.*

John Howard,

Director, National Institute for Occupational Safety and Health.

[FR Doc. 2011–15826 Filed 6–23–11; 8:45 am]

BILLING CODE 4163–19–P

DEPARTMENT OF HEALTH AND HUMAN SERVICES

Determination Concerning a Petition To Add a Class of Employees to the Special Exposure Cohort

AGENCY: National Institute for Occupational Safety and Health (NIOSH), Department of Health and Human Services (HHS).

ACTION: Notice.

SUMMARY: HHS gives notice of a determination concerning a petition to add a class of employees from the Bliss & Laughlin Steel Company located at 110 Hopkins Street, Buffalo, New York, to the Special Exposure Cohort (SEC) under the Energy Employees Occupational Illness Compensation Program Act of 2000 (EEOICPA), 42 U.S.C. 7384q. On June 3, 2011, the Secretary of HHS determined that the following class of employees does not meet the statutory criteria for addition to the SEC as authorized under EEOICPA:

All Atomic Weapons Employees who worked at the Bliss & Laughlin Steel Company located at 110 Hopkins Street, Buffalo, New York, for the period from January 1, 1951, through December 31, 1952, and/or during the residual period from January 1, 1953, through December 31, 1998.

FOR FURTHER INFORMATION CONTACT: Stuart L. Hinnefeld, Director, Division of Compensation Analysis and Support, National Institute for Occupational Safety and Health (NIOSH), 4676 Columbia Parkway, MS C–46, Cincinnati, OH 45226, Telephone 1–877–222–7570. Information requests can also be submitted by e-mail to *DCAS@CDC.GOV.*

John Howard,

Director, National Institute for Occupational Safety and Health.

[FR Doc. 2011–15833 Filed 6–23–11; 8:45 am]

BILLING CODE 4163–19–P

DEPARTMENT OF HEALTH AND HUMAN SERVICES

Determination Concerning a Petition To Add a Class of Employees to the Special Exposure Cohort

AGENCY: National Institute for Occupational Safety and Health (NIOSH), Department of Health and Human Services (HHS).

ACTION: Notice.

SUMMARY: HHS gives notice of a determination concerning a petition to add a class of employees from the Wah Chang facility in Albany, Oregon, to the Special Exposure Cohort (SEC) under the Energy Employees Occupational Illness Compensation Program Act of 2000 (EEOICPA), 42 U.S.C. 7384q. On June 3, 2011, the Secretary of HHS determined that the following class of employees does not meet the statutory criteria for addition to the SEC as authorized under EEOICPA:

All Atomic Weapons Employees who worked in any building at the Wah Chang facility in Albany, Oregon, for the entire residual contamination period from January 1, 1973, through October 31, 2009.

FOR FURTHER INFORMATION CONTACT: Stuart L. Hinnefeld, Director, Division of Compensation Analysis and Support, National Institute for Occupational Safety and Health (NIOSH), 4676 Columbia Parkway, MS C–46, Cincinnati, OH 45226, Telephone 1–877–222–7570. Information requests can also be submitted by e-mail to *DCAS@CDC.GOV.*

John Howard,

Director, National Institute for Occupational Safety and Health.

[FR Doc. 2011–15827 Filed 6–23–11; 8:45 am]

BILLING CODE 4163–19–P

DEPARTMENT OF HEALTH AND HUMAN SERVICES

Agency for Healthcare Research and Quality

Agency Information Collection Activities: Proposed Collection; Comment Request

AGENCY: Agency for Healthcare Research and Quality, HHS.

ACTION: Notice.

SUMMARY: This notice announces the intention of the Agency for Healthcare Research and Quality (AHRQ) to request that the Office of Management and Budget (OMB) approve the proposed information collection project: ''Patient Safety Organization Certification for

Initial Listing and Related Forms, Patient Safety Confidentiality Complaint Form, and Common Formats.'' In accordance with the Paperwork Reduction Act, 44 U.S.C. 3501–3521, AHRQ invites the public to comment on this proposed information collection.

This proposed information collection was previously published in the **Federal Register** on April 18th, 2011 and allowed 60 days for public comment. No comments were received. The purpose of this notice is to allow an additional 30 days for public comment.

DATES: Comments on this notice must be received by July 25, 2011.

ADDRESSES: Written comments should be submitted to: AHRQ's OMB Desk Officer by fax at (202) 395–6974 (attention: AHRQ's desk officer) or by e-mail at *OIRA_submission@omb.eop.gov* (attention: AHRQ's desk officer).

Copies of the proposed collection plans, data collection instruments, and specific details on the estimated burden can be obtained from the AHRQ Reports Clearance Officer.

FOR FURTHER INFORMATION CONTACT: Doris Lefkowitz, AHRQ Reports Clearance Officer, (301) 427–1477, or by e-mail at *doris.lefkowitz@AHRQ.hhs.gov.*

SUPPLEMENTARY INFORMATION:

Proposed Project

Patient Safety Organization Certification for Initial Listing and Related Forms, Patient Safety Confidentiality Complaint Form, and Common Formats

The Patient Safety and Quality Improvement Act of 2005 (hereafter the Patient Safety Act), 42 U.S.C. 299b–21 to 299b–26, was enacted in response to growing concern about patient safety in the United States and the Institute of Medicine's 1999 report, To Err is Human: Building a Safer Health System. The goal of the statute is to improve patient safety by providing an incentive for health care providers to work voluntarily with experts in patient safety to reduce risks and hazards to the safety and quality of patient care. The Patient Safety Act signifies the Federal Government's commitment to fostering a culture of patient safety among health care providers; it offers a mechanism for creating an environment in which the causes of risks and hazards to patient safety can be thoroughly and honestly examined and discussed without fear of penalties and liabilities. It provides for the voluntary formation of Patient Safety Organizations (PSOs) that can collect, aggregate, and analyze confidential information reported voluntarily by health care providers. By analyzing substantial amounts of patient safety event information across multiple institutions, PSOs will be able to identify patterns of failures and propose measures to eliminate or reduce patient safety risks and hazards.

In order to implement the Patient Safety Act, the Department of Health and Human Services (HHS) issued the Patient Safety and Quality Improvement Final Rule (hereafter the Patient Safety Rule), 42 CFR part 3, which became effective on January 19, 2009. The Patient Safety Rule establishes a framework by which hospitals, doctors, and other health care providers may voluntarily report information to PSOs, on a privileged and confidential basis, for the aggregation and analysis of patient safety events. In addition, the Patient Safety Rule outlines the requirements that entities must meet to become PSOs and the process by which the Secretary of HHS (hereafter the Secretary) will review and accept certifications and list PSOs.

In addition to the Patient Safety Act and the Patient Safety Rule, HHS issued Guidance Regarding Patient Safety Organizations' Reporting Obligations and the Patient Safety and Quality Improvement Act of 2005 (hereafter Guidance) on December 30, 2010. The Guidance addresses questions that have arisen regarding the obligations of PSOs where they or the organization of which they are a part are legally obligated under the Federal Food, Drug, and Cosmetic Act (FDCA) and its implementing regulations to report certain information to the Food and Drug Administration (FDA) and to provide FDA with access to its records, including access during an inspection of its facilities. This Guidance applies to all entities that seek to be or are PSOs or component PSOs that have mandatory FDA-reporting obligations under the FDCA and its implementing regulations (''FDA-regulated reporting entities'') or are organizationally related to such FDA-regulated reporting entities (*e.g.,* parent organizations, subsidiaries, sibling organizations).

When PSOs meet the requirements of the Patient Safety Act, the information collected and the analyses and deliberations regarding the information receive Federal confidentiality and privilege protections under this legislation. The Secretary delegated authority to the Director of the Office for Civil Rights (OCR) to enforce the confidentiality protections of the Patient Safety Act. 71 FR 28701–28702 (May 17, 2006). OCR is responsible for enforcing protections regarding patient safety work product (PSWP), which generally includes information that could improve patient safety, health care quality, or health care outcomes and (1) is assembled or developed by a provider for reporting to a PSO and is reported to a PSO or (2) is developed by a PSO for the conduct of patient safety activities. Civil money penalties may be imposed for knowing or reckless impermissible disclosures of PSWP. AHRQ implements and administers the rest of the Patient Safety Act's provisions.

Pursuant to 42 CFR 3.102, an entity that seeks to be listed as a PSO by the Secretary must certify that it meets certain requirements and, upon listing, will meet other criteria. To remain listed for renewable three-year periods, a PSO must recertify that it meets these obligations and will continue to meet them while listed. The Patient Safety Act and Patient Safety Rule also impose other obligations, discussed below, that a PSO must meet to remain listed. In order for the Secretary to administer the Patient Safety Act and Rule, the entities seeking to be listed and to remain listed must complete the proposed forms attached hereto.

Method of Collection

With this submission, AHRQ is requesting approval of the following proposed administrative forms:

1. PSO Certification for Initial Listing Form. This form, which is to be completed by an entity seeking to be listed by the Secretary as a PSO for an initial three-year period, contains certifications that the entity meets the requirements for listing as a PSO, in accordance with 42 U.S.C. 299b–24(a)(1) and 42 CFR 3.102.

2. PSO Certification for Continued Listing Form. In accordance with 42 U.S.C. 299b–24(a)(2) and the Patient Safety Rule, this form is to be completed by a listed PSO seeking continued listing as a PSO by the Secretary for an additional three year period.

3. PSO Two Bona Fide Contracts Requirement Certification Form. To remain listed, a PSO must have contracts with more than one provider, within successive 24 month periods, beginning with the date of its initial listing. 42 U.S.C. 299(b)(1)(C). This form is to be used by a PSO to certify whether it has met this requirement.

4. PSO Disclosure Statement Form. A PSO must submit this form when it (i) has a Patient Safety Act contract with-a health care provider and (ii) it has financial, reporting, and contractual relationships with that contracting provider or is not independent of that contracting provider. 42 U.S.C. 299b–24; 42 CFR 3.102(d)(2).

5. PSO Information Form. This form gathers information on PSOs and the type of healthcare providers and settings that they are working with to conduct patient safety activities in order to improve patient safety. It is designed to collect a minimum level of data necessary to develop aggregate statistics relating to the Patient Safety Act, including types of institutions participating and their general location in the US. This information will be included in AHRQ's annual quality report, as required by 42 U.S.C. 299b–23(c).

OCR is requesting approval of the following administrative form:

Patient Safety Confidentiality Complaint Form. The purpose of this collection is to allow OCR to collect the minimum information needed from individuals filing patient safety confidentiality complaints with our office so that we have a basis for initial processing of those complaints.

In addition, AHRQ is requesting approval for a set of common definitions and reporting formats (hereafter Common Formats). Pursuant to 42 U.S.C. 299b–23(b), AHRQ coordinates the development of the Common Formats that allow PSOs and health care providers to voluntarily collect and submit standardized information regarding patient safety events.

Estimated Annual Respondent Burden

While there are a number of information collection forms described below, they will be implemented at different times and frequency due to the voluntary nature of seeking listing as a PSO and using the Common Formats. Exhibit 1 shows the estimated annualized burden hours for the respondent to provide the requested information, and Exhibit 2 shows the estimated annualized cost burden associated with the respondents' time to provide the requested information. The total burden hours are estimated to be 75,764 hours annually and the total cost burden is estimated to be $2,538,852 annually.

PSO Certification for Initial Listing Form

The average annual burden for the collection of information requested by the certification forms for initial listing is based upon a total average estimate of 15 respondents per year and an estimated time of 18 hours per response. This collection of information takes place on an ongoing basis.

Certification for Continued Listing Form

The average annual burden for the collection of information requested by the certification form for continued listing is based upon the estimate that 90% of the listed PSOs during the 3 years of this clearance, or 24 PSOs annually, will submit forms with an estimated time of eight hours per response. The Certification for Continued Listing Form will be completed by any interested PSO at least 75 days before the end of its current three-year listing period.

Two Bona Fide Contracts Requirement Certification

The average annual burden for the collection of information requested by the two-contract requirement is based upon an estimate of 40 respondents per year and an estimated one hour per response. This collection of information takes place when the PSO notifies the Secretary that it has entered into two contracts.

Disclosure Statement Form

AHRQ assumes that only a small percentage of entities will need to file a disclosure form. However, AHRQ is providing a high estimate of 7 respondents annually and thus presumably overestimating respondent burden. The average annual burden estimate of 21 hours for the collection of information requested by the disclosure form is based upon an estimated three hours per response. This information collection takes place when a PSO first reports having any of the specified types of additional relationships with a health care provider with which it has a contract to carry out patient safety activities.

Information Form

The overall annual burden estimate of 240 hours for the collection of information requested by the PSO Information Form is based upon an estimate of 80 respondents per year and an estimated three hours per response. This information collection will begin in 2011; newly listed PSOs will first report in the calendar year after their listing by the HHS Secretary.

Patient Safety Confidentiality Complaint Form

The overall annual burden estimate of 1 hour for the collection of information requested by the form is based on an estimate of two respondents per year and an estimated 20 minutes per response. OCR's information collection using this form will not begin until after there is at least one PSO receiving and generating PSWP and there is an allegation of a violation of the statutory protection of PSWP.

Common Formats

AHRQ estimates that 5% FTE of a Patient Safety Manager at a hospital will be spent to administer the Common Formats, which is approximately 100 hours a year. AHRQ estimates the number of hospitals using Common Formats in the first year as 500, then 750 in year 2, and 1000 in year 3, for an annual average of 750 over 3 years.

EXHIBIT 1—ESTIMATED ANNUALIZED BURDEN HOURS

Form	Number of respondents	Number of responses per respondent	Hours per response	Total burden hours
Patient Safety Organization Certification for Initial Listing Form	15	1	18	270
Certification for Continued Listing Form	24	1	8	192
Two Bona Fide Contracts Requirement Form	40	1	1	40
Disclosure Statement Form	7	1	3	21
Information Form	80	1	3	240
Patient Safety Confidentiality Complaint Form	2	1	20/60	1
Common Formats	750	1	100	75,000
Total	918	NA	NA	75,764

EXHIBIT 2—ESTIMATED ANNUALIZED COST BURDEN

Form	Number of respondents	Total burden hours	Average hourly wage rate*	Total cost burden
Certification for Initial Listing Form	15	270	33.51	9,048
Certification for Continued Listing Form	24	192	33.51	6,434
Two Bona Fide Contracts Requirement Form	40	40	33.51	$1,340
Disclosure Statement Form	7	21	33.51	704
Information Form	80	240	33.51	8,042
Patient Safety Confidentiality Complaint Form	2	1	33.51	34
Common Formats	750	75,000	33.51	2,513,250
Total	918	75,764	NA	2,538,852

*Based upon the mean of the hourly wages for healthcare practitioner and technical occupation, National Compensation Survey, May 2009, "U.S. Department of Labor, Bureau of Labor Statistics."

Estimated Annual Costs to the Federal Government

a. AHRQ

The total cost to the Federal Government for the PSO forms and Common Formats is $1,737,390 per year, including project management and support for the review and administration of the PSO forms and the development and maintenance of the Common Formats.

b. OCR

Through an interagency agreement (IAA), OCR provides management for and support of the enforcement of the confidentiality protections of the Patient Safety Act and the Patient Safety Rule. The cost of this IAA is approximately $300,000 annually.

Request for Comments

In accordance with the Paperwork Reduction Act, comments on AHRQ's information collection are requested with regard to any of the following: (a) Whether the proposed collection of information is necessary for the proper performance of AHRQ healthcare research and healthcare information dissemination functions, including whether the information will have practical utility; (b) the accuracy of AHRQ's estimate of burden (including hours and costs) of the proposed collection(s) of information; (c) ways to enhance the quality, utility, and clarity of the information to be collected; and (d) ways to minimize the burden of the collection of information upon the respondents, including the use of automated collection techniques or other forms of information technology.

Comments submitted in response to this notice will be summarized and included in the Agency's subsequent request for OMB approval of the proposed information collection. All comments will become a matter of public record.

Dated: June 10, 2011.

Carolyn M. Clancy,

Director.

[FR Doc. 2011–15578 Filed 6–23–11; 8:45 am]

BILLING CODE 4160–90–M

DEPARTMENT OF HEALTH AND HUMAN SERVICES

Centers for Disease Control and Prevention

[Docket Number: NIOSH–243]

Manual Materials Handling (MMH) Workshop

AGENCY: National Institute for Occupational Safety and Health (NIOSH) of the Centers for Disease Control and Prevention (CDC), Department of Health and Human Services (HHS).

ACTION: Notice of public meeting.

SUMMARY: The National Institute for Occupational Safety and Health (NIOSH) of the Centers for Disease Control and Prevention (CDC) in partnership with the University of Cincinnati, Department of Environmental Health, will be holding a two-day Manual Materials Handling (MMH) Workshop. The Workshop is a National Occupational Research Agenda (NORA) activity organized by the Wholesale and Retail Trade Sector and the Transportation, Warehouse and Utilities Sector. The MMH Workshop goal is to stimulate through roundtable discussions the wider adoption of current, effective MMH equipment, and the development of the next generation of MMH equipment for the purposes of reducing both worker fatigue from overexertion and strains/sprains, as well as improving overall efficiency. The purpose of MMH Workshop is to develop cost effective engineering solutions for manual materials handling jobs in Retail, Wholesale and Warehouse industries.

DATES: The public meeting will be held 8 a.m. to 5 p.m., Eastern Daylight Time, October 11 through 12, 2011.

Place: Hyatt Regency Cincinnati, 151 West Fifth Street, Cincinnati, Ohio 45202, telephone (513) 579–1234.

SUPPLEMENTARY INFORMATION:

Status: Attendance is limited only by the space available. The meeting room accommodates 225 people. If interested in attending the meeting, please contact the NIOSH Docket Office at *nioshdocket@cdc.gov* or telephone (513)533–8611. Priority for attendance will be given to the Loss Prevention/Safety representatives from businesses within the Retail, Wholesale and Warehouse industries. Other requests to attend the meeting will then be accommodated on a first-come basis.

Registration and information on the Workshop can be found at the University of Cincinnati Web site *http://www.eh.uc.edu/MMHworkshop*.

Attendees: Industry/safety/loss prevention representatives from the Retail, Wholesale and Warehouse industries who believe there should be a better way of moving materials and containers in their businesses.

Manufacturers/vendors of MMH equipment who desire to partner with one or more Retail, Wholesale and Warehouse industries to explore/develop the next generation of MMH-assisted equipment.

Practitioners/researchers who seek to partner with businesses in implementing and evaluating MMH engineering solutions to lifting jobs in the Retail, Wholesale and Warehouse industries.

The public, insurance experts, Workers' Compensation representatives, and government representatives who are interested in reducing the injuries associated with manual lifting in jobs found in the Retail, Wholesale and Warehouse industries.

Format: Roundtable panel discussion focusing on each of nine common, but unique, Manual Materials Handling jobs.

Note: This workshop is not a sales event nor will exhibits of any kind be allowed. Any attendees who attempt to use this meeting for sales purpose will be asked to leave. This meeting is about generating new ideas for manual assist equipment that meets the needs of the business community identified as Retail, Wholesale and Warehousing.

FOR FURTHER INFORMATION CONTACT: Vern Anderson, NIOSH, MS–C14, Robert A. Taft Laboratories, 4676 Columbia Parkway, Cincinnati, Ohio 45236, telephone (513)533–8319, E-mail: *vanderson@cdc.gov*.

Dated: June 15, 2011.

Tanya Popovic,

Deputy Associate Director for Science, Centers for Disease Control and Prevention.

[FR Doc. 2011–15840 Filed 6–23–11; 8:45 am]

BILLING CODE 4163–19–P

DEPARTMENT OF HEALTH AND HUMAN SERVICES

Centers for Disease Control and Prevention

Development of Best Practices for Community Health Needs Assessment and Implementation Strategy; Public Forum

AGENCY: Centers for Disease Control and Prevention (CDC), Department of Health and Human Services (HHS).

ACTION: Notice of public meeting.

SUMMARY: The Centers for Disease Control and Prevention (CDC), located within the Department of Health and Human Services (HHS), will hold a public forum from July 11–13, 2011 on processes relating to community health needs assessment (CHNA) and implementation strategy/plan development and execution. HHS/CDC is developing best practices designed to support state and local health departments to meet public health accreditation standards, and by other entities who may wish to utilize them in their community health planning processes. This notice announces the public forum.

DATES: The public forum will be held on: Monday, July 11, 2011, from 1 to 5:30 p.m. EST, Tuesday, July 12, 2011, from 8 a.m. to 5 p.m. EST, and Wednesday, July 13, 2011, from 8 a.m. to 4 p.m. EST.

ADDRESSES: The public forum will be held at the Emory Conference Center Hotel, 1615 Clifton Road, Atlanta, GA 30329. Please visit the Emory Conference Center Hotel Web site for additional information and directions to the facility: *http://www.emoryconferencecenter.com/map-directions/.*

Registration: HHS/CDC is working with the National Network of Public Health Institutes (NNPHI) to manage on-line registration and provide logistical support. Participants are encouraged to preregister for the public forum. On-line registration and a draft agenda are available at: *http://www.regonline.com/2011CHNAPublicForum.* As space is limited, registration is limited to the first 200 registrants. CDC and NNPHI will make every effort to accommodate persons with physical disabilities or special needs. If you require special accommodations due to a disability, please contact Anooj Pattnaik, Project Coordinator for NNPHI, at (504) 301–9847 or via e-mail at *apattnaik@nnphi.org* at least 7 days in advance of the meeting.

FOR FURTHER INFORMATION CONTACT: Simeon Niles, Office of Prevention Through Healthcare, Office of the Associate Director for Policy, Centers for Disease Control and Prevention, 1600 Clifton Road, NE., Atlanta, Georgia 30333; *phone:* (404) 639–7522.

SUPPLEMENTARY INFORMATION: As the principal Federal public health authority, HHS/CDC intends to develop best practices in CHNA and implementation strategy development and execution for improved community health outcomes. These best practices are intended to support community health planning and implementation activities, including national public health accreditation activities wherein state and local health departments must conduct ''community health assessments'' and develop community health improvement plans. Currently, there is considerable variation in CHNA processes, and many available tools lack standards to support their use in fulfilling regulatory and accreditation requirements. In addition, development of best practices in CHNA may assist charitable hospital organizations to conduct a CHNA and adopt an implementation strategy, as required by Section 9007(a) of the Affordable Care Act (ACA) (Pub. L. 111–148). Additional information regarding the CHNA requirement is available at *http://www.irs.gov.* Proceedings from this public forum will be compiled in a report to serve as input to the best practices guidelines which CDC intends to publish later this year.

Agenda: The meeting will include presentations related to national public health accreditation standards, current practices in CHNA, implementation strategy/plan development and execution, and the best practices development process. The meeting will consist of panel presentations. Participants attending the public forum will be invited to provide comment at the end of each panel discussion. NNPHI will make every effort to make available to the public the final agenda and panelists' presentations two business days before the meeting. The final agenda and panelists' presentations will be available at *HTTP://WWW.REGONLINE.COM/2011CHNAPUBLICFORUM.* The agenda is subject to change without notice. If NNPHI is unable to post the presentations on the registration Web site prior to the meeting, the material will be made publicly available at the location of the meeting.

Procedure: Oral comments from the public will be scheduled during public comment periods at the end of each panel discussion. Each commenter will be limited to 3–5 minutes. If the number of participants requesting to comment is greater than can be reasonably accommodated, NNPHI may conduct a lottery to determine the speakers for the scheduled public comment sessions. Individuals interested in making formal comments may submit their comments to the Office of Prevention through Healthcare mailbox at: *http://www.cdc.gov/policy/opth.* Comments must be submitted by 5 p.m. on July 20, 2011 and include ''Best Practices Guidelines'' in the subject line.

Dated: June 16, 2011.

Tanya Popovic,

Deputy Associate Director for Science, Centers for Disease Control and Prevention.

[FR Doc. 2011–15839 Filed 6–23–11; 8:45 am]

BILLING CODE 4163–18–P

DEPARTMENT OF HEALTH AND HUMAN SERVICES

Centers for Disease Control and Prevention

Interagency Committee on Smoking and Health, (ICSH)

In accordance with section 10(a)(2) of the Federal Advisory Committee Act (Pub. L. 92–463), the Centers for Disease Control and Prevention (CDC), announces the following meeting of the aformentioned committee:

Time and Date: 9 a.m.–4:30 p.m., July 28, 2011.

Place: Capital Hilton, Federal AB Rooms, 1001 16th Street, NW., Washington, DC 20036–5701, Telephone: (202) 393–1000.

Status: Open to the public, limited only by the space available. Those who wish to attend are encouraged to register with the contact person listed below. If you will require a sign language interpretator, or have other special needs, please notify the contact person by 4:30 E.S.T. on July 18, 2011.

Purpose: The Interagency Committee on Smoking and Health advises the Secretary, Department of Health and Human Services, and the Assistant Secretary for Health in the (a) coordination of all research and education programs and other activities within the Department and with other federal, state, local and private agencies and (b) establishment and maintenance of liaison with appropriate private entities, Federal agencies, and State and local public health agencies with respect to smoking and health activities.

Matters To Be Discussed: The topic of the meeting will be ''Tobacco-Use Cessation: Emerging Interventions and Innovations.'' The meeting will focus on emerging and innovative practices to expand access to and improve the effectiveness of tobacco-use cessation interventions in areas such as low-income smokers and smokers suffering from mental disease. Panel discussions will be held to highlight Federal, State and local efforts in place to address these disparities.

Agenda items are subject to change as priorities dictate.

Substantive program information as well as summaries of the meeting and roster of committee members may be obtained from the Internet at *http://www.cdc.gov/tobacco* mid-September 2011 or the contact person listed below.

Contact Person for More Information: Monica L. Swann, Management and Program Analyst, Office on Smoking and Health, CDC, 4770 Buford Highway, Mailstop: K–50, Atlanta, Georgia 30341, Telephone: (770) 488–5278.

The Director, Management Analysis and Services Office, has been delegated the authority to sign **Federal Register** notices pertaining to announcements of meetings and other committee management activities, for both the Centers for Disease Control and Prevention and the Agency for Toxic Substances and Disease Registry.

Dated: June 16, 2011.

Elaine L. Baker,

Director, Management Analysis and Service Office, Centers for Disease Control and Prevention.

[FR Doc. 2011–15838 Filed 6–23–11; 8:45 am]

BILLING CODE 4163–18–P

DEPARTMENT OF HEALTH AND HUMAN SERVICES

Centers for Medicare & Medicaid Services

[CMS–7021–N]

Medicare, Medicaid, and Children's Health Insurance Programs; Meeting of the Advisory Panel on Outreach and Education (APOE) July 28, 2011

AGENCY: Centers for Medicare & Medicaid Services (CMS), HHS.

ACTION: Notice of meeting.

SUMMARY: This notice announces a meeting of the Advisory Panel on Outreach and Education (APOE) (the Panel) in accordance with the Federal Advisory Committee Act. The Panel advises and makes recommendations to the Secretary of Health and Human Services and the Administrator of the Centers for Medicare & Medicaid Services on opportunities to enhance the effectiveness of consumer education strategies concerning the Medicare, Medicaid, and Children's Health Insurance (CHIP) programs. This meeting is open to the public.

DATES: *Meeting Date:* Thursday, July 28, 2011 from 8:30 a.m. to 3 p.m., Eastern Daylight Time (E.D.T.).

Deadline for Meeting Registration, Presentations and Comments: Thursday, July 14, 2011, 5 p.m., E.D.T.

Deadline for Requesting Special Accommodations: Thursday, July 14, 2011, 5 p.m., E.D.T.

ADDRESSES: *Meeting Location:* Hilton Washington Hotel Embassy Row, 2015 Massachusetts Avenue, NW., Washington, DC 20036.

Meeting Registration, Presentations, and Written Comments: Jennifer Kordonski, Designated Federal Official (DFO), Division of Forum and Conference Development, Office of Communications, Centers for Medicare & Medicaid Services, 7500 Security Boulevard, Mailstop S1–13–05, Baltimore, MD 21244–1850 or contact Ms. Kordonski via e-mail at *Jennifer.Kordonski@cms.hhs.gov.*

Registration: The meeting is open to the public, but attendance is limited to the space available. Persons wishing to attend this meeting must register by contacting the DFO at the address listed in the **ADDRESSES** section of this notice or by telephone at number listed in the **FOR FURTHER INFORMATION CONTACT** section of this notice, by the date listed in the **DATES** section of this notice. Individuals requiring sign language interpretation or other special accommodations should contact the DFO at the address listed in the **ADDRESSES** section of this notice by the date listed in the **DATES** section of this notice.

FOR FURTHER INFORMATION CONTACT: Jennifer Kordonski, (410) 786–1840, or on the Internet at *http://www.cms.gov/FACA/04_APOE.asp* for additional information and updates on committee activities. Press inquiries are handled through the CMS Press Office at (202) 690–6145.

SUPPLEMENTARY INFORMATION: In accordance with section 10(a) of the Federal Advisory Committee Act (FACA), this notice announces a meeting of the Advisory Panel on Outreach and Education (APOE) (the Panel). Section 9(a)(2) of the Federal Advisory Committee Act authorizes the Secretary of Health and Human Services (the Secretary) to establish an advisory panel if the Secretary determines that the panel is ''in the public interest in connection with the performance of duties imposed * * * by law.'' Such duties are imposed by section 1804 of the Social Security Act (the Act), requiring the Secretary to provide informational materials to Medicare beneficiaries about the Medicare program, and section 1851(d) of the Act, requiring the Secretary to provide for ''activities * * * to broadly disseminate information to [M]edicare beneficiaries * * * on the coverage options provided under [Medicare Advantage] in order to promote an active, informed selection among such options.''

The Panel is also authorized by section 1114(f) of the Act (42 U.S.C. 1314(f)) and section 222 of the Public Health Service Act (42 U.S.C. 217a). The Secretary signed the charter establishing this Panel on January 21, 1999 (64 FR 7899, February 17, 1999) and approved the renewal of the charter on January 21, 2011 (76 FR 11782, March 3, 2011).

Pursuant to the amended charter, the Panel advises and makes recommendations to the Secretary of Health and Human Services and the Administrator of the Centers for Medicare & Medicaid Services (CMS) concerning optimal strategies for the following:

- Developing and implementing education and outreach programs for individuals enrolled in, or eligible for, Medicare, Medicaid, and the Children's Health Insurance Program (CHIP).
- Informing Medicare, Medicaid and CHIP consumers, providers and stakeholders pursuant to education and outreach initiatives about the availability of other health coverage that may be available to them (for example, via health insurance exchanges starting

in 2014), including the appropriate use of public-private partnerships to leverage the resources of the private sector in educating beneficiaries, providers, and stakeholders.

• Expanding outreach to vulnerable and underserved communities, including racial and ethnic minorities, in the context of Medicare, Medicaid, and CHIP education programs.

• Assembling and sharing an information base of ''best practices'' for helping consumers evaluate health plan options.

• Building and leveraging existing community infrastructures for information, counseling, and assistance.

• Drawing the program link between outreach and education, promoting consumer understanding of health care coverage choices and facilitating consumer selection/enrollment, which in turn support the overarching goal of improved access to quality care, including prevention services, envisioned under health care reform.

The current members of the Panel are: Samantha Artiga, Principal Policy Analyst, Kaiser Family Foundation; Joseph Baker, President, Medicare Rights Center; Marjorie Cadogan, Executive Deputy Commissioner, Department of Social Services; Jonathan Dauphine, Senior Vice President, AARP; Jason Dollarhide, Deputy Executive Director, Housing Authority of the Peoria Tribe of Indians of Oklahoma; Barbara Ferrer, Executive Director, Boston Public Health Commission; Shelby Gonzales, Senior Health Outreach Associate, Center on Budget & Policy Priorities; Richard Frank, Director, Whittingham Cancer Center; Jan Henning, Benefits Counseling & Special Projects Coordinator, North Central Texas Council of Governments' Area Agency on Aging; Deeana Jang, Policy Director, Asian and Pacific Islander American Health Forum; Warren Jones, Executive Director, Mississippi Institute for Improvement of Geographic Minority Health; Madeline Lawson, President and Chief Executive Officer, Institute for the Advancement of Multicultural & Minority Medicine; John Lui, Executive Director, Stout Vocational Rehabilitation Institute; Sandy Markwood, Chief Executive Officer, National Association of Area Agencies on Aging; Miriam Mobley-Smith, Dean, Chicago State University, College of Pharmacy; Ana Natale-Pereira, Associate Professor of Medicine, University of Medicine & Dentistry of New Jersey; Megan Padden, Vice President, Sentara Health Plans; David W. Roberts, Vice-President, Healthcare Information and Management System Society; Julie Bodën Schmidt, Associate Vice President, National Association of Community Health Centers; Winston Wong, Medical Director, Community Benefit Director, Kaiser Permanente and Donna Yee, Chief Executive Officer, Asian Community Center of Sacramento Valley.

The agenda for the July 28, 2011 meeting will include the following:

• Welcome and Listening Session with CMS Leadership.

• Swearing in of new members.

• Recap of the previous (October 13, 2010) meeting.

• Medicare, Medicaid & CHIP Outreach & Education Strategies.

• An opportunity for public comment.

• Next steps.

Individuals or organizations that wish to make a 5-minute oral presentation on an agenda topic should submit a written copy of the oral presentation to the DFO at the address listed in the **ADDRESSES** section of this notice by the date listed in the **DATES** section of this notice. The number of oral presentations may be limited by the time available. Individuals not wishing to make a presentation may submit written comments to the DFO at the address listed in the **ADDRESSES** section of this notice by the date listed in the **DATES** section of this notice.

Authority: Sec. 222 of the Public Health Service Act (42 U.S.C. 217a) and sec. 10(a) of Pub. L. 92–463 (5 U.S.C. App. 2, sec. 10(a) and 41 CFR 102–3).

(Catalog of Federal Domestic Assistance Program No. 93.733, Medicare—Hospital Insurance Program; and Program No. 93.774, Medicare—Supplementary Medical Insurance Program).

Dated: *June 16, 2011.*

Donald M. Berwick,

Administrator, Centers for Medicare & Medicaid Services.

[FR Doc. 2011–15613 Filed 6–23–11; 8:45 am]

BILLING CODE 4120–01–P

DEPARTMENT OF HEALTH AND HUMAN SERVICES

Centers for Medicare & Medicaid Services

[CMS–1584–N]

Medicare Program; Second Semi-Annual Meeting of the Advisory Panel on Ambulatory Payment Classification Groups—August 10, 2011 Through August 12, 2011

AGENCY: Centers for Medicare & Medicaid Services, Department of Health and Human Services.

ACTION: Notice.

SUMMARY: This notice announces the second semi-annual meeting of the Advisory Panel on Ambulatory Payment Classification (APC) Groups (the Panel) for 2011. The purpose of the Panel is to review the APC groups and their associated weights and to advise the Secretary of the Department of Health and Human Services (DHHS) (the Secretary) and the Administrator of the Centers for Medicare & Medicaid Services (CMS) (the Administrator) concerning the clinical integrity of the APC groups and their associated weights. We will consider the Panel's advice as we prepare the final rule that would update the hospital Outpatient Prospective Payment System (OPPS) for CY 2012.

DATES: *Meeting Dates:* We are scheduling the second semi-annual meeting in 2011 for the following dates and times:

• Wednesday, August 10, 2011, 1 p.m. to 5 p.m. eastern standard time (e.s.t.) [1]

• Thursday, August 11, 2011, 8 a.m. to 5 p.m. (e.s.t.) [1]

• Friday, August 12, 2011, 8 a.m. to 12 Noon (e.s.t.) [2]

Note: [1] The times listed in this notice are approximate times; consequently, the meetings may last longer than listed in this notice, but will not begin before the posted times.

[2] If the Panel's business concludes on Thursday, August, 11, 2011, there will be no meeting on Friday, August, 12, 2011.

Deadlines

Deadline for Hardcopy Comments and electronic format suggested agenda topics—5 p.m. (e.s.t.), Friday, July 15, 2011.

Deadline for Hardcopy Presentations, including the required electronic documents as discussed below—5 p.m. (e.s.t.), Friday, July 15, 2011.

Deadline for Attendance Registration—5 p.m. (e.s.t.), Wednesday, July 27, 2011.

Deadline for Special Accommodations—5 p.m. (e.s.t.), Wednesday, July 27, 2011.

ADDRESSES: The meeting will be held in the Auditorium, the Centers for Medicare & Medicaid Services (CMS) Central Office, 7500 Security Boulevard, Baltimore, Maryland 21244–1850.

FOR FURTHER INFORMATION CONTACT: Paula Smith, Designated Federal Officer (DFO), CMS, CMM, HAPG, DOC, 7500 Security Boulevard, Mail Stop C4–05–17, Baltimore, MD 21244–1850. Phone: (410) 786–3985.

Note: We recommend that you advise couriers of the following information: When

delivering hardcopies of presentations to CMS, if no one answers at the above phone number, please call (410) 786–4532 or (410) 786–7267.

The e-mail address for comments, presentations, and registration requests is *APCPanel@cms.hhs.gov.*

News media representatives must contact our Public Affairs Office at (202) 690–6145.

Advisory Committees' Information Lines: The phone numbers for the CMS Federal Advisory Committee Hotline are 1–877–449–5659 (toll free) and (410) 786–9379 (local).

Web Sites: For additional information on the APC Panel and updates to the Panel's activities, we refer readers to our Web site available at: *http://www.cms.hhs.gov/FACA/05_AdvisoryPanelonAmbulatoryPaymentClassificationGroups.asp#TopOfPage.*

Note: There is an UNDERSCORE after FACA/05; there is no space between the underscore and the capital A. You may also search information about the APC Panel and its membership in the Federal Advisory Committee Act (FACA) database at the following URL: *https://www.fido.gov/facadatabase/public.asp.*

Submission of Materials to the Designated Federal Officer (DFO)

We require electronic versions of the written comments and presentations, in addition to hardcopies. Because of staffing and resource limitations, we cannot accept written comments and presentations by FAX, nor can we print written comments and presentations received electronically for dissemination at the meeting. Only hardcopy comments and presentations can be reproduced for public dissemination. All hardcopy presentations must be accompanied by Form CMS–20017 (revised May 2011). The form is now available through the CMS Forms Web site. To download Form CMS–20017, visit the following Web site: *http://www.cms.hhs.gov/cmsforms/downloads/cms20017.pdf.* Additionally, presenters must clearly explain the action that they are requesting CMS to take in the appropriate section of the form. They must also state their relationship to the organization that they are representing in the presentation.

Note: Issues that are vague, or that are outside the scope of the APC Panel's purpose, will not be considered for presentations and comments. There will be no exceptions to this rule. We appreciate your cooperation on this matter.

In summary, presenters and/or commenters must do the following:

- Send both electronic and hardcopy versions of their presentations and written comments by the prescribed deadlines.
- Send electronic transmissions to the e-mail address below.
- Mail (or send by courier) to the Designated Federal Officer (DFO) all hardcopies, accompanied by Form CMS–20017 (revised 01/07), if they are presenting, as specified in the **FOR FURTHER INFORMATION CONTACT** section of this notice.
- Commenters not presenting at the APC panel meeting are not required to send Form CMS–20017 with their written comments.
- Do not send images of patients in any of the documents unless their faces have been covered.

SUPPLEMENTARY INFORMATION:

I. Background

The Secretary is required by section 1833(t)(9)(A) of the Social Security Act (the Act) to consult with an expert, outside advisory panel on the clinical integrity of the APC groups and weights established under the Medicare Hospital Outpatient Prospective Payment System (OPPS).

The APC Panel meets up to three times annually. The Panel consists of up to 15 members, who are representatives of providers, and a Chair.

Each Panel member must be employed full-time by a hospital, hospital system, or other Medicare provider subject to payment under the OPPS. The Secretary or Administrator selects the Panel membership based upon either self-nominations or nominations submitted by Medicare providers and other interested organizations.

All members must have technical expertise to enable them to participate fully in the Panel's work. The expertise encompasses hospital payment systems; hospital medical care delivery systems; provider billing systems; APC groups; Current Procedural Terminology (CPT) codes; and alpha-numeric Health Care Common Procedure Coding System (HCPCS) codes; and the use of, and payment for, drugs, medical devices, and other services in the outpatient setting, as well as other forms of relevant expertise. Details regarding membership requirements for the APC Panel are found on the FACA and CMS Web sites as listed above.

The Panel presently consists of the following members: (Note: The asterisk [*] indicates the Panel members whose terms end on September 30, 2011.)

- E. L. Hambrick, M.D., J.D., Chair, CMS Medical Officer.
- Ruth L. Bush, M.D., M.P.H.
- Kari S. Cornicelli, C.P.A., FHFMA.
- Dawn L. Francis, M.D., M.H.S.
- Kathleen Graham, R.N., M.S.H.A., C.P.H.Q., A.C.M.
- Patrick A. Grusenmeyer, Sc.D., F.A.C.H.E.*
- David Halsey, M.D.
- Brian D. Kavanagh, M.D., M.P.H.
- Judith T. Kelly, B.S.H.A., R.H.I.T., R.H.I.A., C.C.S.
- Scott Manaker, M.D., PhD
- John Marshall, CRA, RCC, RT.
- Agatha L. Nolen, PhD, M.S., F.A.S.H.P.*
- Randall A. Oyer, M.D.
- Daniel Pothen, M.S., R.H.I.A., C.P.H.I.M.S., C.C.S.P, C.H.C.
- Gregory Przybylski, M.D.
- Neville B. Sarkari, M.D., FACP.

II. Agenda

The agenda for the August 2011 meeting will provide for discussion and comment on the following topics as designated in the Panel's Charter:

- Addressing whether procedures within an APC group are similar both clinically and in terms of resource use.
- Evaluating APC group weights.
- Reviewing packaging the cost of items and services, including drugs and devices, into procedures and services, including the methodology for packaging and the impact of packaging the cost of those items and services on APC group structure and payment.
- Removing procedures from the inpatient list for payment under the OPPS.
- Using claims and cost report data for CMS' determination of APC group weights.
- Addressing other technical issues concerning APC group structure.

Note: The subject matter before the Panel will be limited to these and related topics. Issues related to calculation of the OPPS conversion factor, charge compression, revisions to the cost report, pass-through payments, payment adjustments, or correct code usage are not within the scope of the Panel's purpose. Therefore, these issues will not be considered for presentations or comments. There will be no exceptions to this rule. We appreciate your cooperation on this matter.

The Panel may use data collected or developed by entities and organizations other than the Department of Health and Human Services (DHHS) and CMS in conducting its review. We recommend that organizations submit data for the Panel's and CMS' review.

III. Written Comments and Suggested Agenda Topics

Hardcopy and electronic written comments and suggested agenda topics should be sent to the DFO as specified

in the **ADDRESSES** section of this notice. The DFO must receive these items by 5 p.m. (e.s.t.), Friday, July 15, 2011. We appreciate your cooperation on this matter.

IV. Oral Presentations

Individuals or organizations wishing to make 5-minute oral presentations must submit hardcopy and electronic versions of their presentations to the DFO by 5 p.m. (e.s.t.), Friday, July 15, 2011.

The number of oral presentations may be limited by the time available. Oral presentations cannot exceed 5 minutes in length for an individual or an organization.

The Chair may further limit time allowed for presentations due to the number of oral presentations, if necessary. Presentation times listed in the public agenda are approximate and presenters should be prepared to present earlier and later than indicated.

V. Presenter and Presentation Information

All presenters must submit Form CMS–20017 (Revised 05/11) that is required for all oral presentations. The DFO must receive the following information from those wishing to make oral presentations:

- The Form CMS–20017 (Revised 05/11) with all pertinent information completed.
- One hardcopy of presentation.
- Electronic copy of presentation.
- Personal registration information as described in the ''Meeting Attendance'' section below.
- Those persons wishing to submit written comments only (and not make a 5 minute oral presentation at the Panel meeting) must send hardcopy and electronic versions of their comments, but they are not required to submit the Form CMS–20017 (Revised 05/11).

VI. Oral Comments

In addition to formal oral presentations, there will be opportunity during the meeting for public oral comments, which will be limited to 1 minute for each individual and a total of 3 minutes per organization.

VII. Meeting Attendance

The meeting is open to the public; however, attendance is limited to space available. Attendance will be determined on a first-come, first-served basis.

Persons wishing to attend this meeting, which is located on Federal property, must e-mail the DFO to register in advance no later than 5 p.m. (e.s.t.), Wednesday, July 27, 2011. A confirmation will be sent to the requester(s) by return e-mail.

The following personal information must be e-mailed to the DFO by the date and time above:

- Name(s) of attendee(s).
- Title(s).
- Organization including address(es).
- E-mail address(es).
- Telephone number(s).

VIII. Security, Building, and Parking Guidelines

The meeting is open to the public, but attendance is limited to the space available. Persons wishing to attend this meeting must register by contacting the DFO at the address listed in the **ADDRESSES** section of this notice or by telephone at the number listed in the **FOR FURTHER INFORMATION CONTACT** section of this notice by the date specified in the **DATES** section of this notice.

This meeting will be held in a Federal government building; therefore, Federal security measures are applicable. We recommend that confirmed registrants arrive reasonably early, but no earlier than 45 minutes before the start of the meeting, to allow additional time to clear security. Security measures include the following:

- Presentation of government-issued photographic identification to the Federal Protective Service or Guard Service personnel.
- Inspection of vehicle's interior and exterior (this includes engine and trunk inspection) at the entrance to the grounds. Parking permits and instructions will be issued after the vehicle inspection.
- Inspection, via metal detector or other applicable means of all persons brought entering the building. We note that all items brought into CMS, whether personal or for the purpose of presentation or to support a presentation, are subject to inspection. We cannot assume responsibility for coordinating the receipt, transfer, transport, storage, set-up, safety, or timely arrival of any personal belongings or items used for presentation or to support a presentation.

Note: Individuals who are not registered in advance will not be permitted to enter the building and will be unable to attend the meeting. The public may not enter the building earlier than 45 minutes before the convening of the meeting.

All visitors must be escorted in areas other than the lower and first floor levels in the Central Building.

IX. Special Accommodations

Individuals requiring sign-language interpretation or other special accommodations must send a request for these services to the DFO by 5 p.m. (e.s.t.), Wednesday, July 27, 2011.

X. Panel Recommendations and Discussions

The Panel's recommendations at any APC Panel meeting generally are not final until they have been reviewed and approved by the Panel on the last day before the final adjournment.

XI. Collection of Information Requirements

This document does not impose information collection and recordkeeping requirements. Consequently, it need not be reviewed by the Office of Management and Budget under the authority of the Paperwork Reduction Act of 1995 (44 U.S.C. Chapter 35).

(Catalog of Federal Domestic Assistance Program No. 93.773, Medicare—Hospital Insurance; and Program No. 93.774, Medicare—Supplementary Medical Insurance Program).

Dated: June 15, 2011.

Donald M. Berwick,

Administrator, Centers for Medicare & Medicaid Services.

[FR Doc. 2011–15903 Filed 6–23–11; 8:45 am]

BILLING CODE 4120–01–P

DEPARTMENT OF HEALTH AND HUMAN SERVICES

Food and Drug Administration

[Docket No. FDA–2010–N–0536]

Agency Information Collection Activities; Announcement of Office of Management and Budget Approval; Guidance for Industry on Pharmacogenomic Data Submissions

AGENCY: Food and Drug Administration, HHS.

ACTION: Notice.

SUMMARY: The Food and Drug Administration (FDA) is announcing that a collection of information entitled ''Guidance for Industry on Pharmacogenomic Data Submissions'' has been approved by the Office of Management and Budget (OMB) under the Paperwork Reduction Act of 1995.

FOR FURTHER INFORMATION CONTACT: Elizabeth Berbakos, Office of Information Management, Food and Drug Administration, 1350 Piccard Dr., PI50–400B, Rockville, MD 20850, 301–796–3792, *Elizabeth.Berbakos@fda.hhs.gov*.

SUPPLEMENTARY INFORMATION: In the **Federal Register** of February 7, 2011 (76

FR 6621), the Agency announced that the proposed information collection had been submitted to OMB for review and clearance under 44 U.S.C. 3507. An Agency may not conduct or sponsor, and a person is not required to respond to, a collection of information unless it displays a currently valid OMB control number. OMB has now approved the information collection and has assigned OMB control number 0910–0557. The approval expires on May 31, 2014. A copy of the supporting statement for this information collection is available on the Internet at *http://www.reginfo.gov/public/do/PRAMain*.

Dated: June 20, 2011.

Leslie Kux,

Acting Assistant Commissioner for Policy.

[FR Doc. 2011–15800 Filed 6–23–11; 8:45 am]

BILLING CODE 4160–01–P

DEPARTMENT OF HEALTH AND HUMAN SERVICES

Food and Drug Administration

[Docket No. FDA–2008–D–0610]

Agency Information Collection Activities; Submission for Office of Management and Budget Review; Comment Request; Draft Guidance for Industry on Postmarketing Adverse Event Reporting for Medical Products and Dietary Supplements During an Influenza Pandemic; Availability

AGENCY: Food and Drug Administration, HHS.

ACTION: Notice.

SUMMARY: The Food and Drug Administration (FDA) is announcing that a proposed collection of information has been submitted to the Office of Management and Budget (OMB) for review and clearance under the Paperwork Reduction Act of 1995.

DATES: Fax written comments on the collection of information by July 25, 2011.

ADDRESSES: To ensure that comments on the information collection are received, OMB recommends that written comments be faxed to the Office of Information and Regulatory Affairs, OMB, *Attn:* FDA Desk Officer, FAX: 202–395–7285, or e-mailed to *oira_submission@omb.eop.gov*. All comments should be identified with the OMB control number 0910–New and title ''Draft Guidance for Industry on Postmarketing Adverse Event Reporting for Medical Products and Dietary Supplements During an Influenza Pandemic.'' Also include the FDA docket number found in brackets in the heading of this document.

FOR FURTHER INFORMATION CONTACT: Elizabeth Berbakos, Office of Information Management, Food and Drug Administration, 1350 Piccard Dr., PI50–400B, Rockville, MD 20850, 301–796–3792, *Elizabeth.Berbakos@fda.hhs.gov*.

SUPPLEMENTARY INFORMATION: In compliance with 44 U.S.C. 3507, FDA has submitted the following proposed collection of information to OMB for review and clearance: *Draft Guidance for Industry on Postmarketing Adverse Event Reporting for Medical Products and Dietary Supplements During an Influenza Pandemic; Availability—(OMB Control Number 0910–New)*

I. Background

FDA is announcing the availability of a revised draft guidance for industry entitled ''Postmarketing Adverse Event Reporting for Medical Products and Dietary Supplements During an Influenza Pandemic.'' In the **Federal Register** of December 16, 2008 (73 FR 76364), FDA published notice of the availability of a draft guidance of the same title. FDA anticipates that during an influenza pandemic, industry and FDA workforces may be reduced while reporting of adverse events related to widespread use of medical products indicated for the treatment and prevention of influenza may increase, although the extent of these possible changes is unknown. The revised draft guidance discusses FDA's intended approach to enforcement of adverse event reporting requirements for drugs, biologics, medical devices, and dietary supplements during an influenza pandemic.

II. Revisions to the 2008 Draft Guidance

FDA is issuing a revised draft guidance that includes recommendations for planning, notification, and documentation for firms that report postmarketing adverse events. The revised draft guidance recommends that each firm's pandemic influenza continuity of operations plan (COOP) include instructions for reporting adverse events and a plan for the submission of stored reports that were not submitted within regulatory timeframes. The revised draft guidance recommends that firms that are unable to fulfill normal adverse event reporting requirements during an influenza pandemic do the following:

- Document the conditions that prevent them from meeting normal reporting requirements,
- Notify the appropriate FDA organizational unit responsible for adverse event reporting compliance when these conditions exist and when the reporting process is restored, and
- Maintain records to identify what reports have been stored.

These recommendations represent collections of information under the Paperwork Reduction Act of 1995 (the PRA) (44 U.S.C. 3501–3520) discussed in section IV of this document. In issuing this revised draft guidance, FDA considered all comments that were submitted in response to the December 2008 draft guidance. Most comments requested that greater clarity be provided in certain sections; FDA has revised these sections accordingly.

This draft guidance does not address monitoring and reporting of adverse events that might be imposed as a condition of authorization for products authorized for emergency use under section 564 of the Federal Food, Drug, and Cosmetic Act (the FD&C Act) (21 U.S.C. 360bbb–3). This draft guidance also does not address monitoring and reporting of adverse events as required by regulations establishing the conditions for investigational use of drugs, biologics, and devices. (See 21 CFR parts 312 and 812.)

This draft guidance is being issued consistent with FDA's good guidance practices regulation (21 CFR 10.115). The draft guidance, when finalized, will represent the Agency's current thinking on postmarketing adverse event reporting for medical products and dietary supplements during pandemic influenza. It does not create or confer any rights for or on any person and does not operate to bind FDA or the public. An alternative approach may be used if such approach satisfies the requirements of the applicable statutes and regulations.

III. Comments

Interested persons may submit to the Division of Dockets Management (see **ADDRESSES**) either electronic or written comments regarding this document. It is only necessary to send one set of comments. It is no longer necessary to send two copies of mailed comments. Identify comments with the docket number found in brackets in the heading of this document. Received comments may be seen in the Division of Dockets Management between 9 a.m. and 4 p.m., Monday through Friday.

IV. Paperwork Reduction Act of 1995

Under the PRA, Federal agencies must obtain approval from the Office of Management and Budget (OMB) for each collection of information that they

conduct or sponsor. ''Collection of information'' is defined in 44 U.S.C. 3502(3) and 5 CFR 1320.3(c) and includes Agency requests or requirements that members of the public submit reports, keep records, or provide information to a third party. Section 3506(c)(2)(A) of the PRA, 44 U.S.C. 3506(c)(2)(A), requires Federal agencies to provide a 60-day notice in the **Federal Register** for each proposed collection of information before submitting the collection to OMB for approval. To comply with this requirement, FDA is publishing this notice of the proposed collection of information set forth in this document.

With respect to the collection of information associated with this draft guidance, FDA invites comments on the following topics: (1) Whether the proposed information collected is necessary for the proper performance of FDA's functions, including whether the information will have practical utility; (2) the accuracy of FDA's estimated burden of the proposed information collected, including the validity of the methodology and assumptions used; (3) ways to enhance the quality, utility, and clarity of the information collected; and (4) ways to minimize the burden of information collected on the respondents, including through the use of automated collection techniques, when appropriate, and other forms of information technology.

The draft guidance explains FDA's approach to enforcement of adverse event reporting requirements for drugs, biologics, medical devices, and dietary supplements during an influenza pandemic, including an intent not to object to changes in the timing of submission of certain reports during some stages of the pandemic response. The Agency recommends that each firm's pandemic influenza COOP include instructions for reporting adverse events, including a plan for the submission of stored reports that were not submitted within regulatory timeframes. The draft guidance explains that firms that are unable to fulfill normal adverse event reporting requirements during an influenza pandemic should: (1) Maintain documentation of the conditions that prevent them from meeting normal reporting requirements; (2) notify the appropriate FDA organizational unit responsible for adverse event reporting compliance when the conditions exist and when the reporting process is restored; and (3) maintain records to identify what reports have been stored.

Based on the number of manufacturers that would be covered by the draft guidance, we estimate that approximately 5,000 firms will add the following to their COOP: (1) Instructions for reporting adverse events; and (2) a plan for submitting stored reports that were not submitted within regulatory timeframes. We estimate that each firm will take approximately 50 hours to prepare the adverse event reporting plan for its COOP.

We estimate that approximately 500 firms will be unable to fulfill normal adverse event reporting requirements because of conditions caused by an influenza pandemic and that these firms will notify the appropriate FDA organizational unit responsible for adverse event reporting compliance when the conditions exist. Although we do not anticipate such pandemic influenza conditions to occur every year, for purposes of the PRA, we estimate that each of these firms will notify FDA approximately once each year, and that each notification will takem approximately 8 hours to prepare and submit.

Concerning the recommendation in the draft guidance that firms unable to fulfill normal adverse event reporting requirements maintain documentation of the conditions that prevent them from meeting these requirements and also maintain records to identify what adverse event reports have been stored and when the reporting process is restored, we estimate that approximately 500 firms will each need approximately 8 hours to maintain the documentation and that approximately 500 firms will each need approximately 8 hours to maintain the records. Therefore, the total recordkeeping burden that would result from the draft guidance would be 258,000 hours.

The draft guidance also refers to previously approved collections of information found in FDA's adverse event reporting requirements in 21 CFR 310.305, 314.80, 314.98, 600.80, 606.170, 640.73, 1271.350, and part 803. These regulations contain collections of information that are subject to review by the Office of Management and Budget (OMB) under the Paperwork Reduction Act of 1995 (44 U.S.C. 3501–3520) and are approved under OMB control numbers 0910–0116, 0910–0291, 0910–0230, 0910–0308, 0910–0437, and 0910–0543. In addition, the draft guidance also refers to adverse event reports for nonprescription human drug products marketed without an approved application and dietary supplements required under sections 760 and 761 of the FD&C Act (21 U.S.C. 379aa and 379aa–1), which include collections of information approved under OMB control numbers 0910–0636 and 0910–0635.

In the **Federal Register** of January 7, 2011 (76 FR 1170), FDA published a 60-day notice requesting public comment on the proposed collection of information. No comments were received.

FDA estimates the burden of this collection of information as follows:

TABLE 1—ESTIMATED ANNUAL REPORTING BURDEN [1]

	Number of respondents	Number of responses per respondent	Total annual responses	Average burden per response	Total hours
Notify FDA when normal reporting is not feasible	500	1	500	8	4,000

[1] There are no capital costs or operating and maintenance costs associated with this information collection.

TABLE 2—ESTIMATED RECORDKEEPING BURDEN [1]

	Number of recordkeepers	Annual frequency per recordkeeping	Total annual records	Hours per record	Total hours
Add adverse event reporting plan to COOP	5,000	1	5,000	50	250,000
Maintain documentation of influenza pandemic conditions and resultant high absenteeism	500	1	500	8	4,000

TABLE 2—ESTIMATED RECORDKEEPING BURDEN [1]—Continued

	Number of recordkeepers	Annual frequency per recordkeeping	Total annual records	Hours per record	Total hours
Maintain records to identify what reports have been stored and when the reporting process was restored	500	1	500	8	4,000
Total					258,000

[1] There are no capital costs or operating and maintenance costs associated with this information collection.

V. Electronic Access

Persons with access to the Internet may obtain the document at either *http://www.fda.gov/Drugs/GuidanceComplianceRegulatoryInformation/Guidances/default.htm, http://www.fda.gov/BiologicsBloodVaccines/GuidanceComplianceRegulatoryInformation/Guidances/default.htm, http://www.fda.gov/MedicalDevices/DeviceRegulationandGuidance/GuidanceDocuments/default.htm, http://www.fda.gov/Food/GuidanceComplianceRegulatoryInformation/GuidanceDocuments/default.htm,* or *http://www.regulations.gov*.

Dated: June 20, 2011.

Leslie Kux,

Acting Assistant Commissioner for Policy.

[FR Doc. 2011–15799 Filed 6–23–11; 8:45 am]

BILLING CODE 4160–01–P

DEPARTMENT OF HEALTH AND HUMAN SERVICES

Food and Drug Administration

[Docket No. FDA–2010–N–0472]

Timothy J. Rosio: Debarment Order

AGENCY: Food and Drug Administration, HHS.

ACTION: Notice.

SUMMARY: The Food and Drug Administration (FDA) is issuing an order under the Federal Food, Drug, and Cosmetic Act (the FD&C Act) debarring Timothy J. Rosio, M.D. for 4 years from providing services in any capacity to a person that has an approved or pending drug product application. FDA bases this order on findings that Dr. Rosio was convicted of misdemeanors under Federal law for conduct relating to the regulation of a drug product under the FD&C Act and that the type of conduct underlying the conviction undermines the process for the regulation of drugs. Dr. Rosio was given notice of the proposed debarment and an opportunity to request a hearing within the timeframe prescribed by regulation. Dr. Rosio failed to respond. Dr. Rosio's failure to respond constitutes a waiver of his right to a hearing concerning this action.

DATES: This order is effective June 24, 2011.

ADDRESSES: Submit applications for termination of debarment to the Division of Dockets Management (HFA–305), Food and Drug Administration, 5630 Fishers Lane, rm. 1061, Rockville, MD 20852.

FOR FURTHER INFORMATION CONTACT: Kenny Shade, Division of Compliance Policy (HFC–230), Food and Drug Administration, 5600 Fishers Lane, Rockville, MD 20857, 301–796–4640.

SUPPLEMENTARY INFORMATION:

I. Background

Section 306(b)(2)(B)(i)(I) of the FD&C Act (21 U.S.C. 335a(b)(2)(B)(i)(I)) permits FDA to debar an individual if it finds that the individual has been convicted of a misdemeanor under Federal law for conduct relating to the regulation of drug products under the FD&C Act, and if FDA finds that the type of conduct that served as the basis for the conviction undermines the process for the regulation of drugs.

On October 18, 2007, Dr. Rosio pleaded guilty to one count of receipt and delivery of a misbranded drug in violation of 21 U.S.C. 331(c) and one count of misbranding of drugs held for sale in violation of 21 U.S.C. 331(k). On October 26, 2007, the U.S. District Court for the Eastern District of California entered judgment against Dr. Rosio for misdemeanor misbranding on those charges.

FDA's finding that debarment is appropriate is based on the misdemeanor convictions referenced herein. The factual basis for the convictions is as follows: Dr. Rosio was a licensed physician in the State of California. Between on or about February 23, 2004, and on or about August 26, 2004, in the Eastern District of California, Dr. Rosio received Botulinum Toxin Type A (TRI-toxin) from Toxin Research International (TRI), which had been shipped in interstate commerce, from Arizona to his clinic in the Eastern District of California. The TRI-toxin that he received was misbranded in that it lacked adequate directions for use in humans. The drug was not approved for use in humans by FDA. After receiving the unapproved drug, Dr. Rosio proffered the delivery and caused the delivery of the drug to patients, some on multiple occasions, in the form of injections, for pay and otherwise, in violation of 21 U.S.C. 331(c). Dr. Rosio additionally held the drug for sale as BOTOX, the FDA approved Botulinum Toxin Type A product. In so doing, Dr. Rosio acted in a way that caused the drug to be further misbranded by offering it for sale to the public under the name of another drug, specifically BOTOX, in violation of 21 U.S.C. 331(k).

As a result of his convictions, on February 16, 2011, FDA sent Dr. Rosio a notice by certified mail proposing to debar him for 4 years from providing services in any capacity to a person that has an approved or pending drug product application. The proposal was based on a finding, under section 306(b)(2)(B)(i)(I) of the FD& C Act, that Dr. Rosio was convicted of a misdemeanor under Federal law for conduct relating to the regulation of drug products under the FD&C Act, and that the conduct that served as a basis for the conviction undermines the process for the regulation of drugs. The proposal also offered Dr. Rosio an opportunity to request a hearing, providing him 30 days from the date of receipt of the letter in which to file the request, and advised him that failure to request a hearing constituted a waiver of the opportunity for a hearing and of any contentions concerning this action. Dr. Rosio failed to respond within the timeframe prescribed by regulation and has, therefore, waived his opportunity for a hearing and waived any contentions concerning his debarment (21 CFR part 12).

II. Findings and Order

Therefore, the Director, Office of Enforcement, Office of Regulatory Affairs, under section 306(b)(2)(B)(i)(I) of the FD& C Act under authority delegated to him (Staff Manual Guide 1410.35), finds that Timothy J. Rosio has

been convicted of a misdemeanor under Federal law for conduct relating to the regulation of a drug product under the FD&C Act, and that the type of conduct that served as a basis for the conviction undermines the process for the regulation of drugs.

As a result of the foregoing finding, Dr. Rosio is debarred for 4 years from providing services in any capacity to a person with an approved or pending drug product application under sections 505, 512, or 802 of the FD&C Act (21 U.S.C. 355, 360b, or 382), or under section 351 of the Public Health Service Act (42 U.S.C. 262), effective (*see* **DATES**), (*see* sections 306(c)(1)(B), (c)(2)(A)(iii), and 201(dd) of the FD&C Act (21 U.S.C. 321(dd)). Any person with an approved or pending drug product application who knowingly employs or retains as a consultant or contractor, or otherwise uses the services of Dr. Rosio, in any capacity during Dr. Rosio's debarment, will be subject to civil money penalties (section 307(a)(6) of the FD&C Act (21 U.S.C. 335b(a)(6)). If Dr. Rosio provides services in any capacity to a person with an approved or pending drug product application during his period of debarment, he will be subject to civil money penalties (section 307(a)(7) of the FD&C Act (21 U.S.C. 335b(a)(7)). In addition, FDA will not accept or review any abbreviated new drug applications submitted by or with the assistance of Dr. Rosio during his period of debarment (section 306(c)(1)(B) of the FD&C Act).

Any application by Dr. Rosio for termination of debarment under section 306(d)(1) of the FD&C Act should be identified with Docket No. FDA–2010–N–0472 and sent to the Division of Dockets Management (*see* **ADDRESSES**). All such submissions are to be filed in four copies. The public availability of information in these submissions is governed by 21 CFR 10.20(j).

Publicly available submissions may be seen in the Division of Dockets Management between 9 a.m. and 4 p.m., Monday through Friday.

Dated: June 13, 2011.

Howard Sklamberg,

Director, Office of Enforcement, Office of Regulatory Affairs.

[FR Doc. 2011–15737 Filed 6–23–11; 8:45 am]

BILLING CODE 4160–01–P

DEPARTMENT OF HEALTH AND HUMAN SERVICES

Food and Drug Administration

[Docket No. FDA–2008–E–0092]

Determination of Regulatory Review Period for Purposes of Patent Extension; XYZAL

AGENCY: Food and Drug Administration, HHS.

ACTION: Notice.

SUMMARY: The Food and Drug Administration (FDA) has determined the regulatory review period for XYZAL and is publishing this notice of that determination as required by law. FDA has made the determination because of the submission of an application to the Director of Patents and Trademarks, Department of Commerce, for the extension of a patent which claims that human drug product.

ADDRESSES: Submit electronic comments to *http://www.regulations.gov*. Submit written petitions along with three copies and written comments to the Division of Dockets Management (HFA–305), Food and Drug Administration, 5630 Fishers Lane, rm. 1061, Rockville, MD 20852.

FOR FURTHER INFORMATION CONTACT: Beverly Friedman, Office of Regulatory Policy, Food and Drug Administration, 10903 New Hampshire Ave., Bldg. 51, rm. 6222, Silver Spring, MD 20993–0002, 301–796–3602.

SUPPLEMENTARY INFORMATION: The Drug Price Competition and Patent Term Restoration Act of 1984 (Pub. L. 98–417) and the Generic Animal Drug and Patent Term Restoration Act (Pub. L. 100–670) generally provide that a patent may be extended for a period of up to 5 years so long as the patented item (human drug product, animal drug product, medical device, food additive, or color additive) was subject to regulatory review by FDA before the item was marketed. Under these acts, a product's regulatory review period forms the basis for determining the amount of extension an applicant may receive.

A regulatory review period consists of two periods of time: A testing phase and an approval phase. For human drug products, the testing phase begins when the exemption to permit the clinical investigations of the drug becomes effective and runs until the approval phase begins. The approval phase starts with the initial submission of an application to market the human drug product and continues until FDA grants permission to market the drug product. Although only a portion of a regulatory review period may count toward the actual amount of extension that the Director of Patents and Trademarks may award (for example, half the testing phase must be subtracted as well as any time that may have occurred before the patent was issued), FDA's determination of the length of a regulatory review period for a human drug product will include all of the testing phase and approval phase as specified in 35 U.S.C. 156(g)(1)(B).

FDA recently approved for marketing the human drug product XYZAL (levocetirizine dihydrochloride). XYZAL is indicated for the relief of symptoms associated with seasonal and perennial allergic rhinitis, and the treatment of the uncomplicated skin manifestations of chronic idiopathic urticaria. Subsequent to this approval, the Patent and Trademark Office received a patent term restoration application for XYZAL (U.S. Patent No. 5,698,558) from UCB Inc., and the Patent and Trademark Office requested FDA's assistance in determining this patent's eligibility for patent term restoration and that FDA determine the product's regulatory review period. In a letter dated June 1, 2011, FDA advised the Patent and Trademark Office that this human drug product had undergone a regulatory review period and that the approval of XYZAL represented the first permitted commercial marketing or use of the product.

FDA has determined that the applicable regulatory review period for XYZAL is 305 days. Of this time, 0 days occurred during the testing phase of the regulatory review period, while 305 days occurred during the approval phase. These periods of time were derived from the following dates:

1. *The date an exemption under section 505(i) of the Federal Food, Drug, and Cosmetic Act (the FD&C Act) (21 U.S.C. 355(i)) became effective:* FDA has verified the applicant's claim that no investigational new drug application was submitted.

2. *The date the application was initially submitted with respect to the human drug product under section 505(b) of the FD&C Act:* July 25, 2006. The applicant claims July 24, 2006, as the date the new drug application (NDA) for Xyzal (NDA 22–064) was initially submitted. However, FDA records indicate that NDA 22–064 was submitted on July 25, 2006.

3. *The date the application was approved:* May 25, 2007. FDA has verified the applicant's claim that NDA 22–064 was approved on May 25, 2007.

This determination of the regulatory review period establishes the maximum potential length of a patent extension.

However, the U.S. Patent and Trademark Office applies several statutory limitations in its calculations of the actual period for patent extension. In its application for patent extension, this applicant seeks 245 days of patent term extension.

Anyone with knowledge that any of the dates as published are incorrect may submit to the Division of Dockets Management (see **ADDRESSES**) either electronic or written comments and ask for a redetermination by August 23, 2011. Furthermore, any interested person may petition FDA for a determination regarding whether the applicant for extension acted with due diligence during the regulatory review period by December 21, 2011. To meet its burden, the petition must contain sufficient facts to merit an FDA investigation. (See H. Rept. 857, part 1, 98th Cong., 2d sess., pp. 41–42, 1984.) Petitions should be in the format specified in 21 CFR 10.30.

Interested persons may submit to the Division of Dockets Management (see **ADDRESSES**) electronic or written comments and written petitions. It is only necessary to send one set of comments. It is no longer necessary to send three copies of mailed comments. However, if you submit a written petition, you must submit three copies of the petition. Identify comments with the docket number found in brackets in the heading of this document.

Comments and petitions that have not been made publicly available on *http://www.regulations.gov* may be viewed in the Division of Dockets Management between 9 a.m. and 4 p.m., Monday through Friday.

Dated: *June 2, 2011.*

Jane A. Axelrad,

Associate Director for Policy, Center for Drug Evaluation and Research.

[FR Doc. 2011–15910 Filed 6–23–11; 8:45 am]

BILLING CODE 4160–01–P

DEPARTMENT OF HEALTH AND HUMAN SERVICES

Food and Drug Administration

[Docket No. FDA–2009–E–0541]

Determination of Regulatory Review Period for Purposes of Patent Extension; INVEGA SUSTENNA

AGENCY: Food and Drug Administration, HHS.

ACTION: Notice.

SUMMARY: The Food and Drug Administration (FDA) has determined the regulatory review period for INVEGA SUSTENNA and is publishing this notice of that determination as required by law. FDA has made the determination because of the submission of an application to the Director of Patents and Trademarks, Department of Commerce, for the extension of a patent which claims that human drug product.

ADDRESSES: Submit electronic comments to *http://www.regulations.gov.* Submit written petitions along with three copies and written comments to the Division of Dockets Management (HFA–305), Food and Drug Administration, 5630 Fishers Lane, rm. 1061, Rockville, MD 20852.

FOR FURTHER INFORMATION CONTACT: Beverly Friedman, Office of Regulatory Policy, Food and Drug Administration, 10903 New Hampshire Ave., Bldg. 51, rm. 6222, Silver Spring, MD 20993–0002, 301–796–3602.

SUPPLEMENTARY INFORMATION: The Drug Price Competition and Patent Term Restoration Act of 1984 (Pub. L.. 98–417) and the Generic Animal Drug and Patent Term Restoration Act (Pub. L. 100–670) generally provide that a patent may be extended for a period of up to 5 years so long as the patented item (human drug product, animal drug product, medical device, food additive, or color additive) was subject to regulatory review by FDA before the item was marketed. Under these acts, a product's regulatory review period forms the basis for determining the amount of extension an applicant may receive.

A regulatory review period consists of two periods of time: A testing phase and an approval phase. For human drug products, the testing phase begins when the exemption to permit the clinical investigations of the drug becomes effective and runs until the approval phase begins. The approval phase starts with the initial submission of an application to market the human drug product and continues until FDA grants permission to market the drug product. Although only a portion of a regulatory review period may count toward the actual amount of extension that the Director of Patents and Trademarks may award (for example, half the testing phase must be subtracted as well as any time that may have occurred before the patent was issued), FDA's determination of the length of a regulatory review period for a human drug product will include all of the testing phase and approval phase as specified in 35 U.S.C. 156(g)(1)(B).

FDA recently approved for marketing the human drug product INVEGA SUSTENNA (paliperidone palmitate). INVEGA SUSTENNA is indicated for the acute and maintenance treatment of schizophrenia in adults. Subsequent to this approval, the Patent and Trademark Office received a patent term restoration application for INVEGA SUSTENNA (U.S. Patent No. 5,254,556) from Janssen, L.P., and the Patent and Trademark Office requested FDA's assistance in determining this patent's eligibility for patent term restoration and that FDA determine the product's regulatory review period. In a letter dated June 1, 2011, FDA advised the Patent and Trademark Office that this human drug product had undergone a regulatory review period and that the approval of INVEGA SUSTENNA represented the first permitted commercial marketing or use of the product.

FDA has determined that the applicable regulatory review period for INVEGA SUSTENNA is 2,253 days. Of this time, 1,608 days occurred during the testing phase of the regulatory review period, while 645 days occurred during the approval phase. These periods of time were derived from the following dates:

1. *The date an exemption under section 505(i) of the Federal Food, Drug, and Cosmetic Act (the FD&C Act) (21 U.S.C. 355(i)) became effective:* June 2, 2003. FDA has verified the applicant's claim that the date the investigational new drug application became effective was on June 2, 2003.

2. *The date the application was initially submitted with respect to the human drug product under section 505(b) of the FD&C Act:* October 26, 2007. FDA has verified the applicant's claim that the new drug application (NDA) for Invega Sustenna (NDA 22–264) was submitted on October 26, 2007.

3. *The date the application was approved:* July 31, 2009. FDA has verified the applicant's claim that NDA 22–264 was approved on July 31, 2009.

This determination of the regulatory review period establishes the maximum potential length of a patent extension. However, the U.S. Patent and Trademark Office applies several statutory limitations in its calculations of the actual period for patent extension. In its application for patent extension, this applicant seeks 1,449 days of patent term extension.

Anyone with knowledge that any of the dates as published are incorrect may submit to the Division of Dockets Management (see **ADDRESSES**) either electronic or written comments and ask for a redetermination by August 23, 2011. Furthermore, any interested person may petition FDA for a determination regarding whether the

applicant for extension acted with due diligence during the regulatory review period by December 21, 2011. To meet its burden, the petition must contain sufficient facts to merit an FDA investigation. (See H. Rept. 857, part 1, 98th Cong., 2d sess., pp. 41–42, 1984.) Petitions should be in the format specified in 21 CFR 10.30.

Interested persons may submit to the Division of Dockets Management (see **ADDRESSES**) electronic or written comments and written petitions. It is only necessary to send one set of comments. It is no longer necessary to send three copies of mailed comments. However, if you submit a written petition, you must submit three copies of the petition. Identify comments with the docket number found in brackets in the heading of this document.

Comments and petitions that have not been made publicly available on *http://www.regulations.gov* may be viewed in the Division of Dockets Management between 9 a.m. and 4 p.m., Monday through Friday.

Dated: *June 2, 2011.*

Jane A. Axelrad,

Associate Director for Policy, Center for Drug Evaluation and Research.

[FR Doc. 2011–15905 Filed 6–23–11; 8:45 am]

BILLING CODE 4160–01–P

DEPARTMENT OF HEALTH AND HUMAN SERVICES

Food and Drug Administration

[Docket No. FDA–2011–N–0428]

Determination That SODIUM FLUORIDE F 18 (Sodium Fluoride F–18) Injection, 10 to 200 Millicuries per Milliliter, Was Not Withdrawn From Sale for Reasons of Safety or Effectiveness

AGENCY: Food and Drug Administration, HHS.

ACTION: Notice.

SUMMARY: The Food and Drug Administration (FDA) has determined that SODIUM FLUORIDE F 18 (sodium fluoride F–18) injection, 10 to 200 millicuries per milliliter (mCi/mL), was not withdrawn from sale for reasons of safety or effectiveness. This determination will allow FDA to approve abbreviated new drug applications (ANDAs) for SODIUM FLUORIDE F 18 injection, 10 to 200 mCi/mL, if all other legal and regulatory requirements are met.

FOR FURTHER INFORMATION CONTACT: Reena Raman, Center for Drug Evaluation and Research, Food and Drug Administration, 10903 New Hampshire Ave., Bldg. 51, rm. 6238, Silver Spring, MD 20993–0002, 301–796–7577.

SUPPLEMENTARY INFORMATION: In 1984, Congress enacted the Drug Price Competition and Patent Term Restoration Act of 1984 (Pub. L. 98–417) (the 1984 amendments), which authorized the approval of duplicate versions of drug products under an ANDA procedure. ANDA applicants must, with certain exceptions, show that the drug for which they are seeking approval contains the same active ingredient in the same strength and dosage form as the ''listed drug,'' which is a version of the drug that was previously approved. ANDA applicants do not have to repeat the extensive clinical testing otherwise necessary to gain approval of a new drug application (NDA). The only clinical data required in an ANDA are data to show that the drug that is the subject of the ANDA is bioequivalent to the listed drug.

The 1984 amendments include what is now section 505(j)(7) of the Federal Food, Drug, and Cosmetic Act (21 U.S.C. 355(j)(7)), which requires FDA to publish a list of all approved drugs. FDA publishes this list as part of the ''Approved Drug Products With Therapeutic Equivalence Evaluations,'' which is known generally as the ''Orange Book.'' Under FDA regulations, drugs are removed from the list if the Agency withdraws or suspends approval of the drug's NDA or ANDA for reasons of safety or effectiveness or if FDA determines that the listed drug was withdrawn from sale for reasons of safety or effectiveness (§ 314.162 (21 CFR 314.162)).

A person may petition the Agency to determine, or the Agency may determine on its own initiative, whether a listed drug was withdrawn from sale for reasons of safety or effectiveness. This determination may be made at any time after the drug has been withdrawn from sale but must be made prior to approving an ANDA that refers to the listed drug (21 CFR 314.161). FDA may not approve an ANDA that does not refer to a listed drug.

SODIUM FLUORIDE F 18 (sodium fluoride F–18) injection, 10 to 200 mCi/mL, is the subject of NDA 22–494, held by National Cancer Institute, National Institutes of Health, and initially approved on January 26, 2011. SODIUM FLUORIDE F 18 (sodium fluoride F–18) is indicated for diagnostic positron emission tomography imaging of bone to define areas of altered osteogenic activity.

The NDA holder has never marketed SODIUM FLUORIDE F 18 (sodium fluoride F–18) injection, 10 to 200 mCi/mL, and in a letter dated May 2, 2011, the NDA holder requested that FDA move the product to the ''Discontinued Drug Product List'' section of the Orange Book. In previous instances (see, *e.g.,* 72 FR 9763, March 5, 2007; 61 FR 25497, May 21, 1996), the Agency has determined that, for purposes of §§ 314.161 and 314.162, never marketing an approved drug product is equivalent to withdrawing the drug from sale.

FDA has reviewed its records and, under § 314.161, has determined that SODIUM FLUORIDE F 18 (sodium fluoride F–18) injection, 10 to 200 mCi/mL, was not withdrawn from sale for reasons of safety or effectiveness. Accordingly, the Agency will continue to list SODIUM FLUORIDE F 18 (sodium fluoride F–18) injection, 10 to 200 mCi/mL, in the ''Discontinued Drug Product List'' section of the Orange Book. The ''Discontinued Drug Product List'' delineates, among other items, drug products that have been discontinued from marketing for reasons other than safety or effectiveness. ANDAs that refer to SODIUM FLUORIDE F 18 (sodium fluoride F–18) injection, 10 to 200 mCi/mL, may be approved by the Agency as long as they meet all other legal and regulatory requirements for the approval of ANDAs. If FDA determines that labeling for this drug product should be revised to meet current standards, the Agency will advise ANDA applicants to submit such labeling.

Dated: June 20, 2011.

Leslie Kux,

Acting Assistant Commissioner for Policy.

[FR Doc. 2011–15815 Filed 6–23–11; 8:45 am]

BILLING CODE 4160–01–P

DEPARTMENT OF HEALTH AND HUMAN SERVICES

Food and Drug Administration

[Docket No. FDA–2009–D–0012]

International Conference on Harmonisation; Guidance on Q4B Evaluation and Recommendation of Pharmacopoeial Texts for Use in the International Conference on Harmonisation Regions; Annex 7(R2) on Dissolution Test General Chapter; Availability

AGENCY: Food and Drug Administration, HHS.

ACTION: Notice.

SUMMARY: The Food and Drug Administration (FDA) is announcing the

availability of a guidance entitled ''Q4B Evaluation and Recommendation of Pharmacopoeial Texts for Use in the ICH Regions; Annex 7(R2): Dissolution Test General Chapter'' (Q4B Annex 7(R2)). The guidance was prepared under the auspices of the International Conference on Harmonisation of Technical Requirements for Registration of Pharmaceuticals for Human Use (ICH). The Q4B Annex 7(R2) is a revision of the previously published ICH guidance, ''Q4B Evaluation and Recommendation of Pharmacopoeial Texts for Use in the ICH Regions; Annex 7: Dissolution Test General Chapter'' (Q4B Annex 7). The revised guidance specifies additional dissolution apparatuses to which interchangeability applies in the three ICH regions, updates the considerations for implementation, and updates the references used for the Q4B evaluation. The guidance is intended to recognize the interchangeability between the local regional pharmacopoeias, thus avoiding redundant testing in favor of a common testing strategy in each regulatory region. The guidance is in the form of an annex to the core guidance on the Q4B process entitled ''Q4B Evaluation and Recommendation of Pharmacopoeial Texts for Use in the ICH Regions'' (core ICH Q4B guidance).

DATES: Submit either electronic or written comments on Agency guidances at any time.

ADDRESSES: Submit written requests for single copies of the guidance to the Division of Drug Information (HFD–240), Center for Drug Evaluation and Research, Food and Drug Administration, 10903 New Hampshire Ave., Bldg. 51, rm. 2201, Silver Spring, MD 20993–0002, or the Office of Communication, Outreach and Development (HFM–40), Center for Biologics Evaluation and Research (CBER), Food and Drug Administration, 1401 Rockville Pike, suite 200N, Rockville, MD 20852–1448. Send one self-addressed adhesive label to assist the office in processing your requests. The guidance may also be obtained by mail by calling CBER at 1–800–835–4709 or 301–827–1800. See the **SUPPLEMENTARY INFORMATION** section for electronic access to the guidance document.

Submit electronic comments on the guidance to *http://www.regulations.gov*. Submit written comments to the Division of Dockets Management (HFA–305), Food and Drug Administration, 5630 Fishers Lane, rm. 1061, Rockville, MD 20852.

FOR FURTHER INFORMATION CONTACT:

Regarding the Guidance

Robert H. King, Sr., Center for Drug Evaluation and Research, Food and Drug Administration, 10903 New Hampshire Ave., Bldg. 51, rm. 4150, Silver Spring, MD 20993–0002, 301–796–1242, or Christopher Joneckis, Center for Biologics Evaluation and Research (HFM–25), Food and Drug Administration, 1401 Rockville Pike, suite 200N, Rockville, MD 20852–1448, 301–827–0373.

Regarding the ICH

Michelle Limoli, Office of International Programs (HFG–1), Food and Drug Administration, 5600 Fishers Lane, Rockville, MD 20857, 301–827–4480.

SUPPLEMENTARY INFORMATION:

I. Background

In recent years, many important initiatives have been undertaken by regulatory authorities and industry associations to promote international harmonization of regulatory requirements. FDA has participated in many meetings designed to enhance harmonization and is committed to seeking scientifically based harmonized technical procedures for pharmaceutical development. One of the goals of harmonization is to identify and then reduce differences in technical requirements for drug development among regulatory agencies.

ICH was organized to provide an opportunity for tripartite harmonization initiatives to be developed with input from both regulatory and industry representatives. FDA also seeks input from consumer representatives and others. ICH is concerned with harmonization of technical requirements for the registration of pharmaceutical products among three regions: The European Union (EU), Japan, and the United States. The six ICH sponsors are the European Commission; the European Federation of Pharmaceutical Industries Associations; the Japanese Ministry of Health, Labour and Welfare (MHLW); the Japanese Pharmaceutical Manufacturers Association; the Centers for Drug Evaluation and Research and Biologics Evaluation and Research, FDA; and the Pharmaceutical Research and Manufacturers of America. The ICH Secretariat, which coordinates the preparation of documentation, is provided by the International Federation of Pharmaceutical Manufacturers Associations (IFPMA).

The ICH Steering Committee includes representatives from each of the ICH sponsors and the IFPMA, as well as observers from the World Health Organization, Health Canada, and the European Free Trade Area.

In the **Federal Register** of April 5, 2010 (75 FR 17148), FDA published a notice announcing the availability of Q4B Annex 7. In September 2010, the April 2010 guidance was revised to add guidance on Health Canada consideration. This second revision, Q4B Annex 7(R2), specifies additional dissolution apparatuses to which interchangeability applies in the three ICH regions: The Basket Apparatus (Apparatus 1), the Paddle Apparatus (Apparatus 2), and the Flow-Through Cell. Q4B Annex 7(R2) also updates the considerations for implementation for FDA, EU, and MHLW. In addition, it updates the references used for the Q4B evaluation.

Following changes made by the three pharmacopeias and after review of the changes by the ICH Q4B Expert Working Group, the ICH Steering Committee, with the endorsement of the three participating regulatory agencies, approved Q4B Annex 7(R2) in November 2010.

The guidance provides specific evaluation outcomes from the ICH Q4B process for the Dissolution Test Chapter harmonization proposal originating from the three-party PDG. The guidance is in the form of an annex to the core ICH Q4B guidance made available in the **Federal Register** of February 21, 2008 (73 FR 9575). When implemented, the annex will provide guidance for industry and regulators on the use of the specific pharmacopoeial texts evaluated by the ICH Q4B process.

FDA is issuing Q4B Annex 7(R2) as Level 2 guidance under FDA's good guidance practices regulation (21 CFR 10.115). Consistent with FDA's good guidance practices regulation, the Agency will accept comments on the guidance at any time. The guidance represents the Agency's current thinking on this topic. It does not create or confer any rights for or on any person and does not operate to bind FDA or the public. An alternative approach may be used if such approach satisfies the requirements of the applicable statutes and regulations.

II. Comments

Interested persons may submit to the Division of Dockets Management (see **ADDRESSES**) either electronic or written comments regarding this document. It is only necessary to send one set of comments. It is no longer necessary to send two copies of mailed comments. Identify comments with the docket number found in brackets in the heading of this document. Received

comments may be seen in the Division of Dockets Management between 9 a.m. and 4 p.m., Monday through Friday.

III. Electronic Access

Persons with access to the Internet may obtain the document at *http://www.regulations.gov, http://www.fda.gov/Drugs/GuidanceComplianceRegulatoryInformation/Guidances/default.htm,* or *http://www.fda.gov/BiologicsBloodVaccines/GuidanceComplianceRegulatoryInformation/Guidances/default.htm.*

Dated: June 20, 2011.

Leslie Kux,

Acting Assistant Commissioner for Policy.

[FR Doc. 2011–15814 Filed 6–23–11; 8:45 am]

BILLING CODE 4160–01–P

DEPARTMENT OF HEALTH AND HUMAN SERVICES

Food and Drug Administration

[Docket No. FDA–2011–N–0002]

Joint Meeting of the Gastrointestinal Drugs Advisory Committee and the Drug Safety and Risk Management Advisory Committee; Notice of Meeting

AGENCY: Food and Drug Administration, HHS.

ACTION: Notice.

This notice announces a forthcoming meeting of a public advisory committee of the Food and Drug Administration (FDA). At least one portion of the meeting will be closed to the public.

Name of Committees: Gastrointestinal Drugs Advisory Committee and the Drug Safety and Risk Management Advisory Committee.

General Function of the Committees: To provide advice and recommendations to the Agency on FDA's regulatory issues.

Date and Time: The meeting will be held on July 20, 2011, from 8 a.m. to 1 p.m.

Location: Hilton Washington DC/Silver Spring, The Ballrooms, 8727 Colesville Rd., Silver Spring, MD. The hotel telephone number is 301–589–5200.

Contact Person: Kristine T. Khuc, Center for Drug Evaluation and Research, Food and Drug Administration, 10903 New Hampshire Ave., Bldg. 31, rm. 2417, Silver Spring, MD 20993–0002, 301–796–9001, *Fax:* 301–847–8533, *e-mail: GIDAC@fda.hhs.gov,* or FDA Advisory Committee Information Line, 1–800–741–8138 (301–443–0572 in the Washington, DC area), and follow the prompts to the desired center or product area. Please call the Information Line for up-to-date information on this meeting. A notice in the **Federal Register** about last minute modifications that impact a previously announced advisory committee meeting cannot always be published quickly enough to provide timely notice. Therefore, you should always check the Agency's Web site and call the appropriate advisory committee hot line/phone line to learn about possible modifications before coming to the meeting.

Agenda: The meeting will be open to the public from 8 a.m. to 9 a.m., unless public participation does not last that long; from 9 a.m. to 1 p.m., the meeting will be closed to permit discussion and review of trade secret and/or confidential commercial information.

FDA generally makes background material available to the public no later than 2 business days before the meeting or follows other procedures to make such material available to the public. There is no background material that is publicly available for this meeting.

Procedure: On July 20, 2011, from 8 a.m. to 9 a.m., the meeting is open to the public. Interested persons may present data, information, or views, orally or in writing, on issues pending before the committee. Written submissions may be made to the contact person on or before July 6, 2011. Oral presentations from the public will be scheduled between approximately 8 a.m. to 9 a.m. Those individuals interested in making formal oral presentations should notify the contact person and submit a brief statement of the general nature of the evidence or arguments they wish to present, the names and addresses of proposed participants, and an indication of the approximate time requested to make their presentation on or before June 27, 2011. Time allotted for each presentation may be limited. If the number of registrants requesting to speak is greater than can be reasonably accommodated during the scheduled open public hearing session, FDA may conduct a lottery to determine the speakers for the scheduled open public hearing session. The contact person will notify interested persons regarding their request to speak by June 28, 2011.

Closed Committee Deliberations: On July 20, 2011, from 9 a.m. to 1 p.m., the meeting will be closed to permit discussion and review of trade secret and/or confidential commercial information (5 U.S.C. 552b(c)(4)). During this session, the committees will discuss the drug development program of an investigational gastroenterology drug.

Persons attending FDA's advisory committee meetings are advised that the agency is not responsible for providing access to electrical outlets.

FDA welcomes the attendance of the public at its advisory committee meetings and will make every effort to accommodate persons with physical disabilities or special needs. If you require special accommodations due to a disability, please contact Kristine T. Khuc at least 7 days in advance of the meeting.

FDA is committed to the orderly conduct of its advisory committee meetings. Please visit our Web site at *http://www.fda.gov/AdvisoryCommittees/AboutAdvisoryCommittees/ucm111462.htm* for procedures on public conduct during advisory committee meetings.

Dated: June 21, 2011.

Jill Hartzler Warner,

Acting Associate Commissioner for Special Medical Programs.

[FR Doc. 2011–15823 Filed 6–23–11; 8:45 am]

BILLING CODE 4160–01–P

DEPARTMENT OF HEALTH AND HUMAN SERVICES

Food and Drug Administration

[Docket No. FDA–2011–N–0013]

Statement of Organizations, Functions, and Delegations of Authority

AGENCY: Food and Drug Administration, HHS.

ACTION: Notice.

SUMMARY: The Food and Drug Administration (FDA) is announcing that it has reorganized the Center for Drug Evaluation and Research (CDER), Office of Compliance. This reorganization includes the organizations and substructure components as listed in this document. This document is announcing availability of the Staff Manual Guide that explains the details of this reorganization.

FOR FURTHER INFORMATION CONTACT: Karen Koenick, Center for Drug Evaluation and Research (HFD–063), Food and Drug Administration, 11919 Rockville Pike, Rockville, MD 20852, 301–796–4422.

I. Summary

The Statement of Organization, Functions, and Delegations of Authority for CDER (35 FR 3685, February 25, 1970, 60 FR 56605, November 9, 1995, 64 FR 36361, July 6, 1999, 72 FR 50112,

August 30, 2007, and 76 FR 19376, April 7, 2011) is amended to reflect the restructuring of CDER, FDA. This reorganization is explained in Staff Manual Guides 1262.1, 1262.3, 1262, 31, 1262.32, 1262.4, 1262.41, 1262.42, 1262.43, 1262.44, 1262.5, 1262.51, 1262.52, 1262.53, 1262.6, 1262.61, and 1262.62. This reorganization includes establishing four Offices and their substructures under the Office of Compliance: Office of Drug Security, Integrity and Recalls (ODSIR), Office of Unapproved Drugs and Labeling Compliance (OUDLC), Office of Manufacturing and Product Quality (OMPQ), and Office of Scientific Investigations (OSI). ODSIR will consist of the Division of Import Operations and Recalls and the Division of Supply Chain Integrity. OUDLC will consist of the Division of Prescription Drugs and the Division of Non-Prescription Drugs and Health Fraud. OMPQ will consist of the Division of International Drug Quality, the Division of Domestic Drug Quality, the Division of Policy, Collaboration and Data Operations, and the Division of GMP Assessment. OSI will consist of the Division of Bioequivalence and Good Laboratory Practice Compliance, the Division of Good Clinical Practice Compliance, and the Division of Safety Compliance. Also included is the abolishment of the Division of Compliance Risk Management.

II. Delegations of Authority

Pending further delegation, directives or orders by the Commissioner of Food and Drugs or Center Director, CDER, all delegations and redelegations of authority made to officials and employees of affected organizational components will continue in them or their successors pending further redelegations, provided they are consistent with this reorganization.

III. Electronic Access

Persons interested in seeing the complete Staff Manual Guide can find it on FDA's Web site at: *http://www.fda.gov/AboutFDA/ReportsManualsForms/StaffManualGuides/default.htm*.

Dated: June 20, 2011.

Leslie Kux,

Acting Assistant Commissioner for Policy.

[FR Doc. 2011–15801 Filed 6–23–11; 8:45 am]

BILLING CODE 4160–01–P

DEPARTMENT OF HEALTH AND HUMAN SERVICES

National Institutes of Health

Eunice Kennedy Shriver National Institute of Child Health & Human Development; Notice of Closed Meeting

Pursuant to section 10(d) of the Federal Advisory Committee Act, as amended (5 U.S.C. App.), notice is hereby given of the following meeting.

The meeting will be closed to the public in accordance with the provisions set forth in sections 552b(c)(4) and 552b(c)(6), Title 5 U.S.C., as amended. The grant applications and the discussions could disclose confidential trade secrets or commercial property such as patentable material, and personal information concerning individuals associated with the grant applications, the disclosure of which would constitute a clearly unwarranted invasion of personal privacy.

Name of Committee: National Institute of Child Health and Human Development, Special Emphasis Panel, ZHD1 DSR–L 50 1.

Date: July 20, 2011.

Time: 4:30 to 7 p.m.

Agenda: To review and evaluate grant applications.

Place: National Institutes of Health, 6100 Executive Boulevard, Rockville, MD 20852, (Telephone Conference Call).

Contact Person: Dennis E. Leszczynski, Ph.D., Scientific Review Officer, Division of Scientific Review, Eunice Kennedy Shriver National Institute of Child Health and Human Development, NIH, 6100 Executive Blvd., Room 5B01, Rockville, MD 20852, 301–435–6884, *leszczyd@mail.nih.gov*.

(Catalogue of Federal Domestic Assistance Program Nos. 93.864, Population Research; 93.865, Research for Mothers and Children; 93.929, Center for Medical Rehabilitation Research; 93.209, Contraception and Infertility Loan Repayment Program, National Institutes of Health, HHS)

Dated: June 20, 2011.

Jennifer S. Spaeth,

Director, Office of Federal Advisory Committee Policy.

[FR Doc. 2011–15872 Filed 6–23–11; 8:45 am]

BILLING CODE 4140–01–P

DEPARTMENT OF HEALTH AND HUMAN SERVICES

National Institutes of Health

National Heart, Lung, and Blood Institute; Notice of Closed Meetings

Pursuant to section 10(d) of the Federal Advisory Committee Act, as amended (5 U.S.C. App.), notice is hereby given of the following meetings.

The meetings will be closed to the public in accordance with the provisions set forth in sections 552b(c)(4) and 552b(c)(6), Title 5 U.S.C., as amended. The grant applications and the discussions could disclose confidential trade secrets or commercial property such as patentable material, and personal information concerning individuals associated with the grant applications, the disclosure of which would constitute a clearly unwarranted invasion of personal privacy.

Name of Committee: National Heart, Lung, and Blood Institute, Special Emphasis Panel; Revision for Resuscitation Outcomes Center Randomized Clinical Trial.

Date: July 15, 2011.

Time: 11 a.m. to 2 p.m.

Agenda: To review and evaluate grant applications.

Place: National Institutes of Health, 6701 Rockledge Drive, Bethesda, MD 20892, (Telephone Conference Call).

Contact Person: William J. Johnson, PhD, Scientific Review Officer, Office of Scientific Review/DERA, National Heart, Lung, and Blood Institute, 6701 Rockledge Drive, Room 7178, Bethesda, MD 20892–7924, 301–435–0725, *johnsonwj@nhlbi.nih.gov*.

Name of Committee: National Heart, Lung, and Blood Institute, Special Emphasis Panel. Studies to Identify Genetic Determinants of COPD.

Date: July 20, 2011.

Time: 2 to 5 p.m.

Agenda: To review and evaluate grant applications.

Place: National Institutes of Health, 6701 Rockledge Drive, Bethesda, MD 20892, (Telephone Conference Call).

Contact Person: Stephanie J. Webb, PhD, Scientific Review Officer, Review Branch/DERA, National Heart, Lung, and Blood Institute, 6701 Rockledge Drive, Room 7196, Bethesda, MD 20892, 301–435–0291, *stephanie.webb@nih.gov*.

(Catalogue of Federal Domestic Assistance Program Nos. 93.233, National Center for Sleep Disorders Research; 93.837, Heart and Vascular Diseases Research; 93.838, Lung Diseases Research; 93.839, Blood Diseases and Resources Research, National Institutes of Health, HHS)

Dated: June 20, 2011.

Jennifer S. Spaeth,

Director, Office of Federal Advisory Committee Policy.

[FR Doc. 2011–15875 Filed 6–23–11; 8:45 am]

BILLING CODE 4140–01–P

DEPARTMENT OF HEALTH AND HUMAN SERVICES

National Institutes of Health

Eunice Kennedy Shriver National Institute of Child Health & Human Development; Notice of Closed Meeting

Pursuant to section 10(d) of the Federal Advisory Committee Act, as amended (5 U.S.C. App.), notice is hereby given of the following meeting.

The meeting will be closed to the public in accordance with the provisions set forth in sections 552b(c)(4) and 552b(c)(6), Title 5 U.S.C., as amended. The grant applications and the discussions could disclose confidential trade secrets or commercial property such as patentable material, and personal information concerning individuals associated with the grant applications, the disclosure of which would constitute a clearly unwarranted invasion of personal privacy.

Name of Committee: National Institute of Child Health and Human Development, Special Emphasis Panel.

The Role of Human-Animal Interactions in Child Health and Development.

Date: July 18–19, 2011.

Time: 8 a.m. to 5 p.m.

Agenda: To review and evaluate grant applications.

Place: Doubletree Hotel Washington, 1515 Rhode Island Avenue, NW., Washington, DC 20005.

Contact Person: Marita R. Hopmann, PhD, Scientific Review Officer, Division of Scientific Review, Eunice Kennedy Shriver National Institute of Child Health and Human Development, NIH, 6100 Executive Blvd., room 5B01, Bethesda, MD 20892, 301–435–6911, *hopmannm@mail.nih.gov.*

(Catalogue of Federal Domestic Assistance Program Nos. 93.864, Population Research; 93.865, Research for Mothers and Children; 93.929, Center for Medical Rehabilitation Research; 93.209, Contraception and Infertility Loan Repayment Program, National Institutes of Health, HHS)

Dated: June 20, 2011.

Jennifer S. Spaeth,

Director, Office of Federal Advisory Committee Policy.

[FR Doc. 2011–15874 Filed 6–23–11; 8:45 am]

BILLING CODE 4140–01–P

DEPARTMENT OF HEALTH AND HUMAN SERVICES

National Institutes of Health

Eunice Kennedy Shriver National Institute of Child Health & Human Development; Notice of Closed Meeting

Pursuant to section 10(d) of the Federal Advisory Committee Act, as amended (5 U.S.C. App.), notice is hereby given of the following meeting.

The meeting will be closed to the public in accordance with the provisions set forth in sections 552b(c)(4) and 552b(c)(6), Title 5 U.S.C., as amended. The grant applications and the discussions could disclose confidential trade secrets or commercial property such as patentable material, and personal information concerning individuals associated with the grant applications, the disclosure of which would constitute a clearly unwarranted invasion of personal privacy.

Name of Committee: National Institute of Child Health and Human Development Special Emphasis Group; Rehabilitation Medicine Scientist Training (RMST) Program (K12).

Date: July 15, 2011.

Time: 10 a.m. to 12:30 p.m.

Agenda: To review and evaluate grant applications.

Place: National Institutes of Health, 6100 Executive Boulevard, Rockville, MD 20852.

Contact Person: Anne Krey, PhD, Scientific Review Officer, Division of Scientific Review, Eunice Kennedy Shriver National Institute of Child Health and Human Development, NIH, 6100 Executive Blvd., Room 5B01, Bethesda, MD 20892, 301–435–6908, *ak41o@nih.gov.*

(Catalogue of Federal Domestic Assistance Program Nos. 93.864, Population Research; 93.865, Research for Mothers and Children; 93.929, Center for Medical Rehabilitation Research; 93.209, Contraception and Infertility Loan Repayment Program, National Institutes of Health, HHS)

Dated: June 20, 2011.

Jennifer S. Spaeth,

Director, Office of Federal Advisory Committee Policy.

[FR Doc. 2011–15877 Filed 6–23–11; 8:45 am]

BILLING CODE 4140–01–P

DEPARTMENT OF HEALTH AND HUMAN SERVICES

National Institutes of Health

National Institute of Diabetes and Digestive and Kidney Diseases; Notice of Closed Meeting

Pursuant to section 10(d) of the Federal Advisory Committee Act, as amended (5 U.S.C. App.), notice is hereby given of the following meeting.

The meeting will be closed to the public in accordance with the provisions set forth in sections 552b(c)(4) and 552b(c)(6), Title 5 U.S.C., as amended. The grant applications and the discussions could disclose confidential trade secrets or commercial property such as patentable material, and personal information concerning individuals associated with the grant applications, the disclosure of which would constitute a clearly unwarranted invasion of personal privacy.

Name of Committee: National Institute of Diabetes and Digestive and Kidney Diseases Special Emphasis Panel, NIDDK R24 Telephone SEP.

Date: July 25, 2011.

Time: 4 to 6 p.m.

Agenda: To review and evaluate grant applications.

Place: National Institutes of Health, Two Democracy Plaza, 6707 Democracy Boulevard, Bethesda, MD 20892, (Telephone Conference Call).

Contact Person: Xiaodu Guo, MD, PhD, Scientific Review Officer, Review Branch, DEA, NIDDK, National Institutes of Health, Room 761, 6707 Democracy Boulevard, Bethesda, MD 20892–5452, (301) 594–4719, *guox@extra.niddk.nih.gov.*

(Catalogue of Federal Domestic Assistance Program Nos. 93.847, Diabetes, Endocrinology and Metabolic Research; 93.848, Digestive Diseases and Nutrition Research; 93.849, Kidney Diseases, Urology and Hematology Research, National Institutes of Health, HHS)

Dated: June 20, 2011.

Jennifer S. Spaeth,

Director, Office of Federal Advisory Committee Policy.

[FR Doc. 2011–15879 Filed 6–23–11; 8:45 am]

BILLING CODE 4140–01–P

DEPARTMENT OF HEALTH AND HUMAN SERVICES

National Institutes of Health

Eunice Kennedy Shriver National Institute of Child Health & Human Development; Notice of Closed Meeting

Pursuant to section 10(d) of the Federal Advisory Committee Act, as amended (5 U.S.C. App.), notice is hereby given of the following meeting.

The meeting will be closed to the public in accordance with the provisions set forth in sections 552b(c)(4) and 552b(c)(6), Title 5 U.S.C., as amended. The grant applications and the discussions could disclose confidential trade secrets or commercial property such as patentable material, and personal information concerning

individuals associated with the grant applications, the disclosure of which would constitute a clearly unwarranted invasion of personal privacy.

Name of Committee: National Institute of Child Health and Human Development Special Emphasis Panel, Palatal Development and Clefting.

Date: July 15, 2011.

Time: 2 p.m. to 5 p.m.

Agenda: To review and evaluate grant applications.

Place: National Institutes of Health, 6100 Executive Boulevard, Rockville, MD 20852, (Telephone Conference Call).

Contact Person: Neelakanta Ravindranath, PhD, Scientific Review Officer, Division of Scientific Review, Eunice Kennedy Shriver National Institute of Child Health and Human Development, NIH, 6100 Executive Blvd., Room 5B0G, MSC 7510, Bethesda/Rockville, MD 20817, 301–435–6889, *ravindrn@mail.nih.gov.*

(Catalogue of Federal Domestic Assistance Program Nos. 93.864, Population Research; 93.865, Research for Mothers and Children; 93.929, Center for Medical Rehabilitation Research; 93.209, Contraception and Infertility Loan Repayment Program, National Institutes of Health, HHS)

Dated: June 20, 2011.

Jennifer S. Spaeth,

Director, Office of Federal Advisory Committee Policy.

[FR Doc. 2011–15880 Filed 6–23–11; 8:45 am]

BILLING CODE 4140–01–P

DEPARTMENT OF HEALTH AND HUMAN SERVICES

National Institutes of Health

National Heart, Lung, and Blood Institute; Notice of Closed Meetings

Pursuant to section 10(d) of the Federal Advisory Committee Act, as amended (5 U.S.C. App.), notice is hereby given of the following meetings.

The meetings will be closed to the public in accordance with the provisions set forth in sections 552b(c)(4) and 552b(c)(6), Title 5 U.S.C., as amended. The grant applications and the discussions could disclose confidential trade secrets or commercial property such as patentable material, and personal information concerning individuals associated with the grant applications, the disclosure of which would constitute a clearly unwarranted invasion of personal privacy.

Name of Committee: National Heart, Lung, and Blood Institute Special Emphasis Panel, Lung Genomics Resource.

Date: July 13, 2011.

Time: 12 p.m. to 4 p.m.

Agenda: To review and evaluate grant applications.

Place: National Institutes of Health, Two Democracy Plaza, 6707 Democracy Boulevard, Bethesda, MD 20892, (Telephone Conference Call).

Contact Person: William J Johnson, PhD, Scientific Review Officer, Office of Scientific Review/DERA, National Heart, Lung, and Blood Institute, 6701 Rockledge Drive, Room 7178, Bethesda, MD 20892–7924, 301–435–0725, *johnsonwj@nhlbi.nih.gov.*

Name of Committee: National Heart, Lung, and Blood Institute Special Emphasis Panel, Short Term Research Training Program.

Date: July 20, 2011.

Time: 1 p.m. to 4 p.m.

Agenda: To review and evaluate grant applications.

Place: National Institutes of Health, 6701 Rockledge Drive, Bethesda, MD 20892, (Telephone Conference Call).

Contact Person: Charles Joyce, PhD, Scientific Review Officer, Office of Scientific Review/DERA, National Heart, Lung, and Blood Institute, 6701 Rockledge Drive, Room 7196, Bethesda, MD 20892–7924, 301–435–0288, *cjoyce@nhlbi.nih.gov.*

Name of Committee: National Heart, Lung, and Blood Institute Special Emphasis Panel, NHLBI Career Enhancement Grants for Stem Cell Research.

Date: July 25, 2011.

Time: 1 p.m. to 3 p.m.

Agenda: To review and evaluate grant applications.

Place: National Institutes of Health, 6701 Rockledge Drive, Bethesda, MD 20892, (Telephone Conference Call).

Contact Person: Jeffrey H Hurst, PhD, Scientific Review Officer, Office of Scientific Review/DERA, National Heart, Lung, and Blood Institute, 6701 Rockledge Drive, Room 7208, Bethesda, MD 20892, 301–435–0303, *hurstj@nhlbi.nih.gov.*

Name of Committee: National Heart, Lung, and Blood Institute Special Emphasis Panel, Long Term Outcome in Acute Respiratory Failure Resource Application.

Date: July 26, 2011.

Time: 2 p.m. to 4 p.m.

Agenda: To review and evaluate grant applications.

Place: National Institutes of Health, 6701 Rockledge Drive, Bethesda, MD 20892, (Telephone Conference Call).

Contact Person: Keary A Cope, PhD, Scientific Review Officer, Office of Scientific Review/DERA, National Heart, Lung, and Blood Institute, 6701 Rockledge Drive, Room 7190, Bethesda, MD 20892–7924, 301–435–2222 *copeka@mail.nih.gov.*

(Catalogue of Federal Domestic Assistance Program Nos. 93.233, National Center for Sleep Disorders Research; 93.837, Heart and Vascular Diseases Research; 93.838, Lung Diseases Research; 93.839, Blood Diseases and Resources Research, National Institutes of Health, HHS)

Dated: June 20, 2011.

Jennifer S. Spaeth,

Director, Office of Federal Advisory Committee Policy.

[FR Doc. 2011–15878 Filed 6–23–11; 8:45 am]

BILLING CODE 4140–01–P

DEPARTMENT OF HEALTH AND HUMAN SERVICES

Substance Abuse and Mental Health Services Administration

Agency Information Collection Activities: Submission for OMB Review; Comment Request

Periodically, the Substance Abuse and Mental Health Services Administration (SAMHSA) will publish a summary of information collection requests under OMB review, in compliance with the Paperwork Reduction Act (44 U.S.C. Chapter 35). To request a copy of these documents, call the SAMHSA Reports Clearance Officer on (240) 276–1243.

Project: 2012 National Survey on Drug Use and Health—(OMB No. 0930–0110)—Revision

The National Survey on Drug Use and Health (NSDUH) is a survey of the civilian, non-institutionalized population of the United States 12 years old and older. The data are used to determine the prevalence of use of tobacco products, alcohol, illicit substances, and illicit use of prescription drugs. The results are used by SAMHSA, ONDCP, Federal government agencies, and other organizations and researchers to establish policy, direct program activities, and better allocate resources.

The 2012 and 2013 NSDUHs will continue conducting a follow-up clinical interview with a subsample of approximately 1,500 respondents. The design of this Mental Health Surveillance Study (MHSS) is based on the recommendations from a panel of expert consultants convened by the Center for Mental Health Services (CMHS), SAMHSA, to discuss mental health surveillance data collection strategies. The goal is to create a statistically sound measure that may be used to estimate the prevalence of Serious Mental Illness (SMI) among adults (age 18+).

For the 2012 and 2013 NSDUHs, no questionnaire changes are proposed.

As with all NSDUH/NHSDA surveys conducted since 1999, the sample size of the survey for 2012 and 2013 will be sufficient to permit prevalence estimates for each of the fifty states and the District of Columbia. The total annual burden estimate is shown below:

ESTIMATED ANNUAL BURDEN FOR 2012/2013 NSDUH

Instrument	Number of respondents	Responses per respondent	Hours per response	Total burden hours	Hourly wage rate	Annualized hourly costs
Household Screening	191,100	1	0.083	15,861	$14.71	$233,315
Interview	67,500	1	1.000	67,500	14.71	992,925
Clinical Follow-up Certification	90	1	1.000	90	14.71	1,324
Clinical Follow-up Interview	1,500	1	1.000	1,500	14.71	22,065
Screening Verification	5,400	1	0.067	362	14.71	5,325
Interview Verification	10,125	1	0.067	678	14.71	9,973
Total	191,190				85,991	1,264,927

Written comments and recommendations concerning the proposed information collection should be sent by July 25, 2011 to: SAMHSA Desk Officer, Human Resources and Housing Branch, Office of Management and Budget, New Executive Office Building, Room 10235, Washington, DC 20503; due to potential delays in OMB's receipt and processing of mail sent through the U.S. Postal Service, respondents are encouraged to submit comments by fax to: 202–395–7285.

Dated: June 17, 2011.

Elaine Parry,

Director, Office of Management, Technology and Operations.

[FR Doc. 2011–15831 Filed 6–23–11; 8:45 am]

BILLING CODE 4162–20–P

DEPARTMENT OF HOMELAND SECURITY

Federal Emergency Management Agency

[Internal Agency Docket No. FEMA–1980–DR; Docket ID FEMA–2011–0001]

Missouri; Amendment No. 7 to Notice of a Major Disaster Declaration

AGENCY: Federal Emergency Management Agency, DHS.

ACTION: Notice.

SUMMARY: This notice amends the notice of a major disaster declaration for the State of Missouri (FEMA–1980–DR), dated May 9, 2011, and related determinations.

DATES: *Effective Date:* June 13, 2011.

FOR FURTHER INFORMATION CONTACT: Peggy Miller, Office of Response and Recovery, Federal Emergency Management Agency, 500 C Street, SW., Washington, DC 20472, (202) 646–3886.

SUPPLEMENTARY INFORMATION: The notice of a major disaster declaration for the State of Missouri is hereby amended to include the following area among those areas determined to have been adversely affected by the event declared a major disaster by the President in his declaration of May 9, 2011.

Miller County for Public Assistance, including direct Federal assistance.

Pettis County for Individual Assistance and Public Assistance, including direct Federal assistance.

The following Catalog of Federal Domestic Assistance Numbers (CFDA) are to be used for reporting and drawing funds: 97.030, Community Disaster Loans; 97.031, Cora Brown Fund; 97.032, Crisis Counseling; 97.033, Disaster Legal Services; 97.034, Disaster Unemployment Assistance (DUA); 97.046, Fire Management Assistance Grant; 97.048, Disaster Housing Assistance to Individuals and Households In Presidentially Declared Disaster Areas; 97.049, Presidentially Declared Disaster Assistance—Disaster Housing Operations for Individuals and Households; 97.050, Presidentially Declared Disaster Assistance to Individuals and Households—Other Needs; 97.036, Disaster Grants—Public Assistance (Presidentially Declared Disasters); 97.039, Hazard Mitigation Grant.

Dated: June 20, 2011.

W. Craig Fugate,

Administrator, Federal Emergency Management Agency.

[FR Doc. 2011–15914 Filed 6–23–11; 8:45 am]

BILLING CODE 9111–23–P

DEPARTMENT OF HOMELAND SECURITY

U.S. Customs and Border Protection

Accreditation and Approval of Intertek USA, Inc., as a Commercial Gauger and Laboratory

AGENCY: U.S. Customs and Border Protection, Department of Homeland Security.

ACTION: Notice of accreditation and approval of Intertek USA, Inc., as a commercial gauger and laboratory.

SUMMARY: Notice is hereby given that, pursuant to 19 CFR 151.12 and 19 CFR 151.13, Intertek USA, Inc., 4398 Highway 77 N, Marion, AR 72364, has been approved to gauge and accredited to test petroleum and petroleum products for customs purposes, in accordance with the provisions of 19 CFR 151.12 and 19 CFR 151.13. Anyone wishing to employ this entity to conduct laboratory analyses and gauger services should request and receive written assurances from the entity that it is accredited or approved by the U.S. Customs and Border Protection to conduct the specific test or gauger service requested. Alternatively, inquiries regarding the specific test or gauger service this entity is accredited or approved to perform may be directed to the U.S. Customs and Border Protection by calling (202) 344–1060. The inquiry may also be sent to *cbp.labhq@dhs.gov.* Please reference the Web site listed below for a complete listing of CBP approved gaugers and accredited laboratories. *http://cbp.gov/xp/cgov/import/operations_support/labs_scientific_svcs/commercial_gaugers/*

DATES: The accreditation and approval of Intertek USA, Inc., as commercial gauger and laboratory became effective on February 16, 2011. The next triennial inspection date will be scheduled for February 2014.

FOR FURTHER INFORMATION CONTACT: Anthony Malana, Laboratories and Scientific Services, U.S. Customs and Border Protection, 1300 Pennsylvania Avenue, NW., Suite 1500N, Washington, DC 20229, 202–344–1060.

Dated: June 16, 2011.

Ira S. Reese,

Executive Director, Laboratories and Scientific Services.

[FR Doc. 2011–15794 Filed 6–23–11; 8:45 am]

BILLING CODE 9111–14–P

DEPARTMENT OF HOMELAND SECURITY

U.S. Customs and Border Protection

Post-Entry Amendment (PEA) Processing Test: Modification, Clarification, and Extension

AGENCY: Customs and Border Protection, Department of Homeland Security.

ACTION: General notice.

SUMMARY: This document announces a modification of U.S. Customs and Border Protection's (CBP's) Post-Entry Amendment (PEA) Processing test, which allows the amendment of entry summaries prior to liquidation. The test is being modified to reflect that PEA procedures will no longer be accepted for entry summaries filed in the Automated Commercial Environment (ACE). In addition, this notice clarifies that for any PEA which results in Antidumping/Countervailing Duty (AD/CVD) cash deposits due (or bond, if allowed), such deposits or bond are due with the submission of the PEA. Lastly, this notice announces that the PEA test is extended for an additional three-year period.

DATES: The Post-Entry Amendment (PEA) Processing test modification set forth in this document is effective September 22, 2011. The PEA test is extended for a three-year period, or such period as may be subsequently announced by CBP, commencing on June 24, 2011.

ADDRESSES: Written comments regarding this notice should be addressed to U.S. Customs and Border Protection, Entry and Drawback Management Branch, Office of International Trade, ATTN: Post-Entry Amendment, 1300 Pennsylvania Avenue, NW., Washington, DC 20229.

FOR FURTHER INFORMATION CONTACT: Questions pertaining to any aspect of this notice should be directed to Laurie Dempsey, U.S. Customs and Border Protection, Entry and Drawback Management Branch, Office of International Trade, at (202) 863–6509 or via e-mail at *laurie.dempsey@dhs.gov.*

SUPPLEMENTARY INFORMATION:

Background

I. Post-Entry Amendment Processing Test Program

The Post-Entry Amendment (PEA) Processing test procedure is authorized under § 101.9(a) of title 19 of the Code of Federal Regulations (19 CFR 101.9(a)), and allows importers to amend entry summaries (not informal entries) prior to liquidation by filing with Customs and Border Protection (CBP) either an individual amendment letter upon discovery of certain kinds of errors or a quarterly tracking report covering certain other errors that occurred during the quarter.

In a notice published in the **Federal Register** (65 FR 70872) on November 28, 2000, CBP announced and described the PEA processing test (the test or PEA test). The notice announced that the test would commence no earlier than December 28, 2000, and run approximately one year.

The PEA test was extended on four subsequent occasions by publication of notice in the **Federal Register** as follows: To December 21, 2002 (67 FR 768, published January 7, 2002); to December 31, 2003 (68 FR 8329, published February 20, 2003); to December 31, 2004 (69 FR 5860, published February 6, 2004); and to August 21, 2008 (72 FR 46654, published August 21, 2007).

II. Modification and Clarification of the PEA Test

In a related notice published in this edition of the **Federal Register**, CBP announces its plan to conduct a National Customs Automation Program test concerning new ACE Entry Summary, Accounts and Revenue (ESAR IV) capabilities. These new capabilities include functionalities specific to Automated Broker Interface processing of post-summary corrections (PSCs) for entry summaries filed in ACE. The notice announces that, for purposes of ESAR IV, a PSC transaction will replace the existing Post-Entry Amendment (PEA) hard copy process for entry summaries filed under ACE. Accordingly, this notice announces conforming changes to the PEA test whereby PEA procedures will no longer be accepted for entry summaries filed in ACE effective September 22, 2011.

This notice also clarifies that for any PEA which results in Antidumping/Countervailing Duty (AD/CVD) cash deposits due (or bond, if allowed), such deposits or bond are due with the submission of the PEA. There is no *de minimis* amount for AD/CVD duties. Liquidated damages may apply if the appropriate AD/CVD duties (or bond) are not submitted with the PEA.

In addition, CBP requests that participants not use submissions made under this test as a means of submitting a prior disclosure under 19 U.S.C. 1592. If a participant wishes to file a prior disclosure for an entry summary amended under this test, the rules and procedures set forth in 19 CFR 162.74 should be followed. For more information on prior disclosures see CBP's Informed Compliance Publication ''The ABC's of Prior Disclosure'' available on *cbp.gov.*

Other than this modification and clarification, the PEA test procedures remain as set forth in previously published notices.

III. Extension of the PEA Test

This notice announces a further extension of the PEA test for a three-year period, or such period as may be subsequently announced by CBP, commencing on the date this document is published in the **Federal Register**.

Dated: May 23, 2011.

Allen Gina,

Assistant Commissioner, Office of International Trade.

[FR Doc. 2011–15804 Filed 6–23–11; 8:45 am]

BILLING CODE P

DEPARTMENT OF HOMELAND SECURITY

U.S. Customs and Border Protection

Post-Summary Corrections to Entry Summaries Filed in ACE Pursuant to the ESAR IV Test

AGENCY: U.S. Customs and Border Protection, Department of Homeland Security.

ACTION: General notice.

SUMMARY: This document announces U.S. Custom and Border Protection's (CBP's) plan to conduct a National Customs Automation Program test concerning new Automated Commercial Environment (ACE) Entry Summary, Accounts and Revenue (ESAR IV) capabilities. Specifically, importers will be allowed to use the Automated Broker Interface (ABI) to file post-summary corrections (PSCs) of certain pre-liquidation ACE entry summaries. As the PSC procedure replaces the existing Post-Entry Amendment (PEA) hard copy process for entry summaries filed under ACE, PEA procedures will no longer be accepted for entry summaries filed in ACE effective September 22, 2011. This notice also describes ESAR IV Portal enhancements and announces test particulars including commencement date, eligibility, procedural and documentation requirements, and test development and evaluation methods.

DATES: The ESAR IV test will commence July 25, 2011, and will continue until concluded by way of announcement in the **Federal Register**. Effective September 22, 2011, PEA procedures will no longer be accepted for entry summaries filed in ACE. Comments

concerning this notice and any aspect of the test may be submitted at any time during the test period to the address set forth below.

ADDRESSES: Comments concerning this notice should be submitted via e-mail to Monica Crockett at *ESARinfoinbox@dhs.gov.* Please indicate ''ESAR IV (Post Summary Corrections Processing)'' in the subject line of your e-mail.

FOR FURTHER INFORMATION CONTACT: For policy-related questions, contact Cynthia Whittenburg at *cynthia.whittenburg@dhs.gov.* For technical questions related to ABI transmissions, contact your assigned client representative. Interested parties without an assigned client representative should direct their questions to the Client Representative Branch at (703) 650–3500.

SUPPLEMENTARY INFORMATION:

Background

I. Automated Commercial Environment (ACE) Test Programs

Automated Commercial Environment (ACE) prototypes are tested in accordance with § 101.9(b) of title 19 of the Code of Federal Regulations (19 CFR 101.9(b)), which provides for the testing of National Customs Automation Program (NCAP) components. A chronological listing of **Federal Register** publications detailing ACE test developments is set forth below in section VII of this document. The procedures and criteria related to participation in the prior ACE tests remain in effect unless otherwise explicitly changed by this or subsequent notices published in the **Federal Register**.

II. ACE Entry Summary, Accounts and Revenue (ESAR IV) Capabilities Relating to the Automated Broker Interface (ABI) Processing of Post-Summary Corrections (PSCs) for ACE Entry Summaries

A. In General

This notice announces CBP's plan to conduct a test concerning new ACE Entry Summary, Accounts and Revenue (ESAR IV) functionalities that permit importers to file post-summary corrections (PSCs) of certain ACE entry summaries using the Automated Broker Interface (ABI). Under ESAR IV, importers will be allowed to use ABI to file PSCs to those pre-liquidation ACE entry summaries that have been accepted by CBP and are fully paid and under CBP control.

A PSC/ABI transaction contains all of the data elements in the original entry summary and constitutes a complete replacement of that entry summary, as well as a replacement of any prior PSCs that may have been made to the original entry summary.

CBP requests that participants not use submissions made under this test as a means of submitting a prior disclosure under 19 U.S.C. 1592. If a participant wishes to file a prior disclosure for an entry summary corrected under this test, the rules and procedures set forth in 19 CFR 162.74 should be followed. For more information on prior disclosures see CBP's Informed Compliance Publication entitled ''The ABC's of Prior Disclosure,'' available on *http://www.cbp.gov/xp/cgov/trade/legal/informed_compliance_pubs/.*

B. Portal Capability

ACE Portal Account owners who have the ability to select ''portal'' as their mode of communication will now be able to respond to CBP Forms 28, 29 and 4647 via the ACE Portal for both ACS and ACE entry summaries. ACE Portal Reports will be enhanced to include improvements to the current list of entry summary data elements. The enhanced entry summary list will be easier to use and will provide additional flexibility when the user is creating and modifying entry summary reports. PSC data elements will also be available for further customization of existing entry summary reports. Additional PSC data elements include a PSC indicator, PSC filer, PSC reason codes at both the header and the line level, and an accelerated liquidation request indicator.

C. Electronic Data Interface (EDI) Capability

Trade participants will be able to submit a PSC for existing ACE formal (type 01) entries and Antidumping/Countervailing (type 03) entries. Informal entries (type 11) are not eligible for PSC. An authorized ACE entry summary filer may submit a PSC for an ACE entry summary originally submitted by another ACE entry summary filer if authorized by the same importer of record.

As noted above, a PSC transaction contains all of the data elements in the original entry summary. It is a complete replacement of the entry summary originally filed with CBP (including any previously filed PSCs) and will be processed through all existing validations including Census warnings. Accordingly, the act of filing a PSC will constitute ''customs business'' as defined in 19 CFR 111.1.

D. Criteria and Rules for Filing a Post-Summary Correction (PSC)

To file a PSC on an existing ACE entry type 01 or 03, the original entry summary or previously filed PSC must satisfy the following requirements:

- The entry summary or previously filed PSC cannot be liquidated.
- The entry summary must be fully paid or revenue free.
- When a PSC results in a type 01 entry being changed/corrected to indicate it is a type 03 entry, or if a PSC for a change/correction to a type 03 entry results in additional AD/CVD duties due, the importer of record must deposit the associated AD/CVD duties (or bond, if allowed) at the same time the PSC is filed. The failure to make the deposit (or bond, if allowed) may result in a claim for liquidated damages.
- The entry summary or previously filed PSC must be in ''accepted'' status. ''Accepted'' status is defined as an entry summary or previously filed PSC that has passed through all technical edits and validations.
- The entry summary or previously filed PSC must be in ''CBP control,'' accepted and fully paid, and not in ''trade control.'' The entry summary or previously filed PSC is in ''trade control'' when it is successfully accepted in the system and not on a statement. The entry summary or previously filed PSC is in ''CBP control'' when it is placed on a statement.
- The PSC filing must be transmitted within 270 days of the date of entry.
- The entry summary or previously filed PSC cannot be filed within 20 calendar days of the scheduled liquidation date.
- The entry summary or previously filed PSC cannot be under CBP review. The filer will receive a message indicating ''PSC not allowed under CBP Review'' if a PSC is submitted where the entry summary or previously filed PSC is in CBP review.
- An entry summary or previously filed PSC that has been flagged for reconciliation may only be corrected by a PSC that does not affect the flagged issue.
- A text explanation and at least one reason code (both to be submitted electronically with the PSC entry summary) are required for each PSC submission.
- There are no limitations to the number of PSCs that can be submitted for any one entry so long as the PSC is not within the disallowed timeframe and all other requirements are met.

E. Data Elements That Cannot Be Changed Via Post Summary Correction (PSC)

Certain data elements cannot be changed using PSC procedures and CBP will reject any PSC submission containing prohibited data elements. The following is a list of data elements that cannot be changed via PSC:

- A type 03 entry cannot be changed to a type 01 entry.
- Importer of record.
- Consolidated summary indicator.
- District/port of entry.
- Cargo release certification request indicator (this includes Department of Transportation (DOT) grouping; Food and Drug Administration (FDA) grouping; and Participating Government Agency (PGA) grouping).
- Live entry indicator.
- NAFTA indicator.
- Reconciliation issue code.
- Preliminary statement print date.
- Periodic statement month.
- Statement client branch identifier.
- Location of goods code.
- Any release detail (release entry filer code, release entry number).

Where applicable, a test participant may file a prior disclosure to reflect a change to these data elements pursuant to 19 CFR 162.74.

F. Liquidation Notices

For non-type 03 entries, when a filer changes the entry summary data via PSC, and CBP makes no further changes to that data, the entry will liquidate ''no change'' as entered. A status of ''no change'' on the bulletin notice of liquidation will signify that CBP did not change the data submitted on the last accepted PSC. A type 03 entry will not be liquidated until the Department of Commerce issues liquidation instructions to CBP covering that entry.

G. ACE ABI CATAIR

To reflect the new ESAR IV capabilities, CBP has revised the following ACE ABI CATAIR chapters:

- Entry Summary Create/Update
- Entry Summary Query
- Entry Summary Status Notification
- Appendix G—ACE Condition Codes and Narrative Text

Documentation specifying the details of electronic submissions of PSCs may be found in the ACE ABI CATAIR on the CBP Web site located at *http://www.cbp.gov/xp/cgov/trade/automated/modernization/ace_edi_messages/catair_main/abi_catair.* Operational documentation addressing PSC may be found in the ACE Entry Summary ''Business Rules and Process Document'' located at *http://www.cbp.gov/linkhandler/cgov/trade/trade_programs/entry_summary/ace/ace_es_business.ctt/ace_es_business.pdf.* Both the CATAIR and the ''Business Rules and Process Document'' will continue to be updated to reflect future deployments of ACE functionality.

H. Access by Filers to Entry and Post Summary Correction (PSC) Data

Entry summary data is confidential commercial information. With regard to visibility to the information, the full content of the original entry summary will be provided only to the filer of that entry summary. As stated above, once a PSC is filed it fully replaces the original entry summary. Accordingly, full information with respect to the PSC is only available to the filer of the PSC. The filer of the original entry summary will be notified that the entry summary has been fully replaced by a PSC, but will not have visibility to the new filing. Similarly, if a subsequent PSC is filed, it fully replaces the previously filed PSC (which had fully replaced the original entry summary) and full information is visible only to the filer of the subsequent PSC. The filer of the original entry summary or the filer of the previously filed PSC will be notified that a new replacement entry summary has been filed by a PSC, but will not have visibility to the new filing. For example, if filer A files the original entry summary and then filer B submits a PSC, filer A will receive notification that a PSC has been filed. If filer A then submits a subsequent PSC, filer B will receive notification of the PSC filing but filer A will not have visibility to what filer B submitted. Conversely, filer B will not have visibility to what filer A submitted. Only the filer of the latest PSC will be able to get the latest full entry summary replacement data in response to a query.

As the information in the entry summary, including any PSC, is the property of the importer, full access to the original entry summary and all PSCs may be provided by the importer of record to filers through normal business communication channels. In the alternative, if the importer of record has a portal account, the importer of record may elect to grant user access to his portal account.

In situations where an earlier filer does not have access to information provided by a subsequent PSC filer, CBP notes that each entry filer and PSC filer is individually responsible and accountable for the accuracy, completeness, and content of the information contained in their separate submissions. Each filer has recordkeeping obligations for the records on which their filing is based; therefore entry filers and PSC filers are not responsible or accountable for any submission not made by them and they do not incur recordkeeping obligations related to such submissions.

I. Post-Entry Amendments (PEAs) To Be Phased Out for Entry Summaries Filed in ACE

The Post-Entry Amendment (PEA) test allows importers to amend entry summaries (excluding informal entries) prior to liquidation by filing with CBP either an individual amendment letter upon discovery of an error or a quarterly tracking report covering any errors that occurred during the quarter. General guidelines and other applicable criteria for filing post-entry amendments were published in the following series of **Federal Register** notices: 65 FR 70872 (November 8, 2000); 67 FR 768 (January 7, 2002); 68 FR 8329 (February 20, 2003); 69 FR 5860 (February 6, 2004); and 72 FR 46654 (August 21, 2007).

This notice announces that, for purposes of ESAR IV, a PSC transaction will replace the existing Post-Entry Amendment (PEA) hardcopy process for entry summaries filed under ACE. For this reason, effective September 22, 2011, PEA procedures will no longer be accepted for entry summaries filed in ACE. Prior to this date, test participants may file either a PSC or a PEA to correct an entry summary filed in ACE. It is noted, however, that a filer should not use both methods to correct the same data element in the same entry summary. A related notice announcing this change to the PEA test is published in this edition of the **Federal Register**.

III. Confidentiality

All data submitted and entered into the ACE Portal is subject to the Trade Secrets Act (18 U.S.C. 1905) and is considered confidential, except to the extent as otherwise provided by law (*see* 19 U.S.C. 1431(c)). As stated in previous notices, participation in this or any of the previous ACE tests is not confidential and upon a written Freedom of Information Act request, a name(s) of an approved participant(s) will be disclosed by CBP in accordance with 5 U.S.C. 552. If necessary, CBP will reserve the right to limit the number of participants and locations during the initial stages of the test.

IV. Waiver of Affected Regulations

Any provision in 19 CFR including, but not limited to, provisions found in parts 141, 142, 143 and 151 thereof relating to entry/entry summary processing that are inconsistent with the

requirements set forth in this notice are waived for the duration of the test. *See* 19 CFR 101.9(a). Additionally, any previous practice pertaining to party definitions, including but not limited to ''ultimate consignee,'' that are inconsistent with the requirements set forth in this notice are waived for the duration of the test. The CATAIR should be consulted for appropriate terms and definitions for purposes of this test.

V. Misconduct Under the Test

An ACE test participant may be subject to civil and criminal penalties, administrative sanctions, liquidated damages, and/or suspension from this test for any of the following:

- Failure to follow the terms and conditions of this test.
- Failure to exercise reasonable care in the execution of participant obligations.
- Failure to abide by applicable laws and regulations.
- Failure to timely deposit duties or fees, including any applicable AD/CVD cash deposits (or bond, if allowed).
- Misuse of the ACE Portal.
- Engagement in any unauthorized disclosure or access to the ACE Portal.
- Engagement in any activity that with the successful evaluation of the new technology.

Suspensions for misconduct will be administered by the Executive Director, Commercial Targeting and Enforcement, Office of International Trade, CBP Headquarters. A written notice proposing suspension will be issued to the participant that apprises the participant of the facts or conduct warranting suspension and informs the participant of the date the suspension will begin. Any decision proposing suspension of a participant may be appealed in writing to the Assistant Commissioner, Office of International Trade within 15 calendar days of the notification date. An appeal of a decision of proposed suspension must address the facts or conduct charges contained in the notice and state how compliance will be achieved. In cases of non-payment, late payment, willful misconduct or where public health interests or safety is concerned, a suspension may be effective immediately.

VI. Test Evaluation Criteria

To ensure adequate feedback, participants are required to participate in an evaluation of this test. CBP also invites all interested parties to comment on the design, implementation and conduct of the test at any time during the test period. CBP will publish the final results in the **Federal Register** and the Customs Bulletin as required by 19 CFR 101.9(b). The following evaluation methods and criteria have been suggested:

1. Baseline measurements to be established through data analysis.

2. Questionnaires from both trade participants and CBP addressing such issues as:

- Workload impact (workload shifts/volume, cycle times, etc.).
- Cost savings (staff, interest, reduction in mailing costs, etc.).
- Policy and procedure accommodation.
- Trade compliance impact.
- Problem resolution.
- System efficiency.
- Operational efficiency.
- Other issues identified by the participant group.

VII. Development of ACE Prototypes

A chronological listing of **Federal Register** publications detailing ACE test developments is set forth below.

- ACE Portal Accounts and Subsequent Revision Notices: 67 FR 21800 (May 1, 2002); 70 FR 5199 (February 1, 2005); 69 FR 5360 and 69 FR 5362 (February 4, 2004); 69 FR 54302 (September 8, 2004).
- ACE System of Records Notice: 71 FR 3109 (January 19, 2006).
- Terms/Conditions for Access to the ACE Portal and Subsequent Revisions: 72 FR 27632 (May 16, 2007); 73 FR 38464 (July 7, 2008).
- ACE Non-Portal Accounts and Related Notice: 70 FR 61466 (October 24, 2005); 71 FR 15756 (March 29, 2006).
- ACE Entry Summary, Accounts and Revenue (ESAR I) Capabilities: 72 FR 59105 (October 18, 2007).
- ACE Entry, Summary, Accounts and Revenue (ESAR II) Capabilities: 73 FR 50337 (August 26, 2008); 74 FR 9826 (March 6, 2009).
- ACE Entry, Summary, Accounts and Revenue (ESAR III) Capabilities: 74 FR 69129 (December 30, 2009).

Dated: May 23, 2011.

Allen Gina,

Assistant Commissioner, Office of International Trade.

[FR Doc. 2011–15834 Filed 6–23–11; 8:45 am]

BILLING CODE P

DEPARTMENT OF HOUSING AND URBAN DEVELOPMENT

[Docket No. FR–5480–N–57]

Notice of Submission of Proposed Information Collection to OMB Sustainable Communities Regional Grant Program

AGENCY: Office of the Chief Information Officer, HUD.

ACTION: Notice.

SUMMARY: The proposed information collection requirement described below has been submitted to the Office of Management and Budget (OMB) for review, as required by the Paperwork Reduction Act. The Department is soliciting public comments on the subject proposal.

This data collection is designed to provide HUD information regarding the Sustainable Communities Regional Planning Grant Program NOFA applications to ensure that information is provided to HUD in a standard manner.

DATES: *Comments Due Date: July 25, 2011.*

ADDRESSES: Interested persons are invited to submit comments regarding this proposal. Comments should refer to the proposal by name and/or OMB approval Number (2501–0024) and should be sent to: HUD Desk Officer, Office of Management and Budget, New Executive Office Building, Washington, DC 20503; *e-mail: OIRA–Submission@omb.eop.gov fax:* 202–395–5806.

FOR FURTHER INFORMATION CONTACT: Colette Pollard, Reports Management Officer, QDAM, Department of Housing and Urban Development, 451 Seventh Street, SW., Washington, DC 20410; *e-mail:* Colette Pollard at *Colette.Pollard@hud.gov;* or *telephone:* (202) 402–3400. This is not a toll-free number. Copies of available documents submitted to OMB may be obtained from Ms. Pollard.

SUPPLEMENTARY INFORMATION: This notice informs the public that the Department of Housing and Urban Development has submitted to OMB a request for approval of the Information collection described below. This notice is soliciting comments from members of the public and affecting agencies concerning the proposed collection of information to: (1) Evaluate whether the proposed collection of information is necessary for the proper performance of the functions of the agency, including whether the information will have practical utility; (2) Evaluate the

accuracy of the agency's estimate of the burden of the proposed collection of information; (3) Enhance the quality, utility, and clarity of the information to be collected; and (4) Minimize the burden of the collection of information on those who are to respond; including through the use of appropriate automated collection techniques or other forms of information technology, *e.g.,* permitting electronic submission of responses.

This notice also lists the following information:

Title of Proposal: Sustainable Communities Regional Grant Program.

OMB Approval Number: 2501–0024.

Form Numbers: HUD Form 2010.

Description of the Need for the Information and its Proposed Use: This data collection is designed to provide HUD information regarding the Sustainable Communities Regional Planning Grant Program NOFA applications to ensure that information is provided to HUD in a standard manner.

Frequency of Submission: On occasion.

	Number of respondents	Annual responses	×	Hours per response	=	Burden hours
Reporting Burden	300	1		2		600

Total Estimated Burden Hours: 600.

Status: Reinstatement with change of previously approved collection.

Authority: Section 3507 of the Paperwork Reduction Act of 1995, 44 U.S.C. 35, as amended.

Dated: June 17, 2011.

Colette Pollard,

Departmental Reports Management Officer, Office of the Chief Information Officer.

[FR Doc. 2011–15764 Filed 6–23–11; 8:45 am]

BILLING CODE 4210–67–P

DEPARTMENT OF HOUSING AND URBAN DEVELOPMENT

[Docket No. FR–5374–N–31]

Buy American Exceptions Under the American Recovery and Reinvestment Act of 2009

AGENCY: Office of the Assistant Secretary for Public and Indian Housing, HUD.

ACTION: Notice.

SUMMARY: In accordance with the American Recovery and Reinvestment Act of 2009 (Pub. L. 111–05, approved February 17, 2009) (Recovery Act), and implementing guidance of the Office of Management and Budget (OMB), this notice advises that certain exceptions to the Buy American requirement of the Recovery Act have been determined applicable for work using Capital Fund Recovery Formula and Competition (CFRFC) grant funds. Specifically, an exception was granted to the Medford Housing Authority of Medford, MA for the purchase and installation of side-opening, Uniform Federal Accessibility Standards (UFAS)-compliant ovens for the LaPrise Village project.

FOR FURTHER INFORMATION CONTACT: Donald J. LaVoy, Deputy Assistant Secretary for Office of Field Operations, Office of Public and Indian Housing, Department of Housing and Urban Development, 451 7th Street, SW., Room 4112, Washington, DC 20410–4000, telephone number 202–402–8500 (this is not a toll-free number); or Dominique G. Blom, Deputy Assistant Secretary for Public Housing Investments, Office of Public Housing Investments, Office of Public and Indian Housing, Department of Housing and Urban Development, 451 7th Street, SW., Room 4130, Washington, DC 20410–4000, telephone number 202–402–8500 (this is not a toll-free number). Persons with hearing- or speech-impairments may access this number through TTY by calling the toll-free Federal Information Relay Service at 800–877–8339.

SUPPLEMENTARY INFORMATION: Section 1605(a) of the Recovery Act provides that none of the funds appropriated or made available by the Recovery Act may be used for a project for the construction, alteration, maintenance, or repair of a public building or public work unless all of the iron, steel, and manufactured goods used in the project are produced in the United States. Section 1605(b) provides that the Buy American requirement shall not apply in any case or category in which the head of a Federal department or agency finds that: (1) Applying the Buy American requirement would be inconsistent with the public interest; (2) iron, steel, and the relevant manufactured goods are not produced in the U.S. in sufficient and reasonably available quantities or of satisfactory quality; or (3) inclusion of iron, steel, and manufactured goods will increase the cost of the overall project by more than 25 percent. Section 1605(c) provides that if the head of a Federal department or agency makes a determination pursuant to section 1605(b), the head of the department or agency shall publish a detailed written justification in the **Federal Register.**

In accordance with section 1605(c) of the Recovery Act and OMB's implementing guidance published on April 23, 2009 (74 FR 18449), this notice advises the public that, on June 2, 2011, upon request of the Medford Housing Authority, HUD granted an exception to the applicability of the Buy American requirements with respect to work, using CFRFC grant funds, based on the fact that the relevant manufactured goods (side-opening, UFAS-compliant ovens) are not produced in the U.S. in sufficient and reasonably available quantities or of satisfactory quality.

Dated: June 16, 2011.

Deborah Hernandez,

General Deputy Assistant Secretary for Public and Indian Housing.

[FR Doc. 2011–15763 Filed 6–23–11; 8:45 am]

BILLING CODE 4210–67–P

DEPARTMENT OF HOUSING AND URBAN DEVELOPMENT

[Docket No. FR–5477–N–25]

Federal Property Suitable as Facilities To Assist the Homeless

AGENCY: Office of the Assistant Secretary for Community Planning and Development, HUD.

ACTION: Notice.

SUMMARY: This Notice identifies unutilized, underutilized, excess, and surplus Federal property reviewed by HUD for suitability for possible use to assist the homeless.

FOR FURTHER INFORMATION CONTACT: Juanita Perry, Department of Housing and Urban Development, 451 Seventh Street, SW., Room 7262, Washington, DC 20410; telephone (202) 708–1234; TTY number for the hearing- and speech-impaired (202) 708–2565, (these telephone numbers are not toll-free), or call the toll-free Title V information line at 800–927–7588.

SUPPLEMENTARY INFORMATION: In accordance with the December 12, 1988 court order in *National Coalition for the Homeless* v. *Veterans Administration,* No. 88–2503–OG (D.D.C.), HUD

publishes a Notice, on a weekly basis, identifying unutilized, underutilized, excess and surplus Federal buildings and real property that HUD has reviewed for suitability for use to assist the homeless. Today's Notice is for the purpose of announcing that no additional properties have been determined suitable or unsuitable this week.

Dated: June 16, 2011,

Mark R. Johnston,

Deputy Assistant Secretary for Special Needs.

[FR Doc. 2011–15510 Filed 6–23–11; 8:45 am]

BILLING CODE 4210–67–P

DEPARTMENT OF THE INTERIOR

Office of the Secretary

Exxon Valdez Oil Spill Trustee Council; Notice of Meeting

AGENCY: Department of the Interior, Office of the Secretary.

ACTION: Notice of meeting.

SUMMARY: The Department of the Interior, Office of the Secretary is announcing a public meeting of the *Exxon Valdez* Oil Spill Public Advisory Committee.

DATES: July 26, 2011, at 10 a.m.

ADDRESSES: Exxon Valdez Oil Spill Trustee Council Office, 441 West 5th Avenue, Suite 500, Anchorage, Alaska.

FOR FURTHER INFORMATION CONTACT: Douglas Mutter, Department of the Interior, Office of Environmental Policy and Compliance, 1689 ''C'' Street, Suite 119, Anchorage, Alaska, 99501, (907) 271–5011.

SUPPLEMENTARY INFORMATION: The Public Advisory Committee was created by Paragraph V.A.4 of the Memorandum of Agreement and Consent Decree entered into by the United States of America and the State of Alaska on August 27, 1991, and approved by the United States District Court for the District of Alaska in settlement of *United States of America* v. *State of Alaska,* Civil Action No. A91–081 CV. The meeting agenda will include a review of the projects proposed for inclusion in the Fiscal Year 2012 annual work plan.

Willie R. Taylor,

Director, Office of Environmental Policy and Compliance.

[FR Doc. 2011–15909 Filed 6–23–11; 8:45 am]

BILLING CODE 4310–RG–P

DEPARTMENT OF THE INTERIOR

Fish and Wildlife Service

[FWS–R2–ES–2011–N108; 20124–1113–0000–C2]

Notice of Availability for Comment: Draft Recovery Plan, First Revision; Mexican Spotted Owl

AGENCY: Fish and Wildlife Service, Interior.

ACTION: Notice of availability; request for comment.

SUMMARY: We, the Fish and Wildlife Service, announce the availability of our draft recovery plan, first revision, for the Mexican Spotted Owl (*Strix occidentalis lucida*) under the Endangered Species Act of 1973, as amended (Act). This species occurs in the states of Arizona, Colorado, New Mexico, Texas, and Utah, south through the Sierra Madre Occidental and Sierra Madre Oriental in Mexico. We request review and comment on our plan from local, State, and Federal agencies; Tribes; and the public. We will also accept any new information on the status of the Mexican spotted owl throughout its range to assist in finalizing the revised recovery plan.

DATES: To ensure consideration, we must receive written comments on or before August 23, 2011. However, we will accept information about any species at any time.

ADDRESSES: If you wish to review the draft recovery plan, you may obtain a copy by visiting our Web site at *http://endangered.fws.gov/recovery/index.html#plans.* Alternatively, you may contact the Arizona Ecological Services Office, U.S. Fish and Wildlife Service, 2321 West Royal Palm Road, Phoenix, Arizona 85021–4951 (602) 242–0210, phone). If you wish to comment on the plan, you may submit your comments in writing by any one of the following methods:

- *U.S. mail:* Field Supervisor, at the above address;
- *Hand-delivery:* Arizona Ecological Services Office at the above address;
- *Fax:* (602) 242–2513; or
- *E-mail: http://www.fws.gov/southwest/es/Arizona/* (type ''Mexican spotted owl'' in the document title search field).

For additional information about submitting comments, see the ''Request for Public Comments'' section below.

FOR FURTHER INFORMATION CONTACT: Steve Spangle, Field Supervisor, at the above address, phone number, or e-mail.

SUPPLEMENTARY INFORMATION:

Background

Recovery of endangered or threatened animals and plants to the point where they are again secure, self-sustaining members of their ecosystems is a primary goal of our endangered species program and the Act (16 U.S.C. 1531 *et seq.*). Recovery means improvement of the status of listed species to the point at which listing is no longer appropriate under the criteria set out in section 4(a)(1) of the Act. The Act requires the development of recovery plans for listed species, unless such a plan would not promote the conservation of a particular species.

Species' History

We listed the Mexican spotted owl as a threatened species under the Act on March 16, 1993 (58 FR 14248). We designated critical habitat on August 31, 2004 (69 FR 53182).

We originally completed and announced a recovery plan for the Mexican spotted owl on October 16, 1995. However, updates on status information and experience in implementing the original recovery plan led to our determination that revision is warranted.

The Mexican spotted owl species nests and roosts in forested areas exhibiting multilayered, uneven-aged tree structure, and in steep, rocky canyonlands. Forested habitats used by the owl vary throughout its range and by activity (nesting, roosting, foraging, dispersal/migration). However, the forest types believed most important to Mexican spotted owls are mixed conifer, pine-oak, and riparian habitats.

Threats to the owl's population in the United States have transitioned from commercial-based timber harvest at the time of listing, to the risk of stand-replacing wildfire. The revised recovery plan recommends protection of currently occupied home ranges, plus development of replacement nesting/roosting habitat over time. The plan recognizes the need to manage these forest landscapes to minimize the effects of large, stand-replacing wildfires, believed to be the greatest current threat to the species.

Recovery Plan Goals

The objective of an agency recovery plan is to provide a framework for the recovery of a species so that protection under the Act is no longer necessary. A recovery plan includes scientific information about the species and provides criteria and actions necessary for us to be able to reclassify the species to threatened status or remove it from the Federal List of Endangered and

Threatened Wildlife and Plants (List). Recovery plans help guide our recovery efforts by describing actions we consider necessary for the species' conservation, and by estimating time and costs for implementing needed recovery measures. To achieve its goals, this draft recovery plan identifies the following objectives:

- Support the Mexican spotted owl throughout its range in perpetuity.
- Maintain habitat conditions necessary to provide roosting and nesting habitat for the Mexican spotted owl through time.

The draft revised recovery plan contains recovery criteria based on maintaining and increasing population numbers and habitat quality and quantity. The revised recovery plan focuses on protecting populations, managing threats, maintaining habitat, monitoring progress, and building partnerships to facilitate recovery.

As the subspecies meets recovery criteria, we will review the subspecies' status and consider removal from the List.

Request for Public Comments

Section 4(f) of the Act requires us to provide public notice and an opportunity for public review and comment during recovery plan development. It is also our policy to request peer review of recovery plans (July 1, 1994; 59 FR 34270). In an appendix to the approved recovery plan, we will summarize and respond to the issues raised by the public and peer reviewers. Substantive comments may or may not result in changes to the recovery plan; comments regarding recovery plan implementation will be forwarded as appropriate to Federal or other entities so that they can be taken into account during the course of implementing recovery actions. Responses to individual commenters will not be provided, but we will provide a summary of how we addressed substantive comments in an appendix to the approved recovery plan.

We invite written comments on the draft revised recovery plan. This plan has undergone significant revision since the original plan, incorporating the most recent scientific research specific to the Mexican spotted owl and input from the Recovery Team. In particular, we are interested in information regarding the current threats to the species and the costs associated with implementing the recommended recovery actions.

Before we approve the plan, we will consider all comments we receive by the date specified in **DATES** above. Methods of submitting comments are in the **ADDRESSES** section above.

Public Availability of Comments

Before including your address, phone number, e-mail address, or other personal identifying information in your comment, you should be aware that your entire comment—including your personal identifying information—may be made publicly available at any time. While you can ask us in your comment to withhold your personal identifying information from public review, we cannot guarantee that we will be able to do so.

Comments and materials we receive will be available, by appointment, for public inspection during normal business hours at our office (see **ADDRESSES**).

Authority

We developed our draft recovery plan under the authority of section 4(f) of the Act, 16 U.S.C. 1533(f). We publish this notice under section 4(f) Endangered Species Act of 1973, as amended (16 U.S.C. 1531 *et seq.*).

Dated: June 6, 2011.

Joy Nicholopoulos,

Acting Regional Director, Southwest Region.

[FR Doc. 2011–15975 Filed 6–23–11; 8:45 am]

BILLING CODE 4310–55–P

DEPARTMENT OF THE INTERIOR

Fish and Wildlife Service

[FWS–R4–ES–2011–N126; 40120–1112–0000–F2]

Endangered and Threatened Wildlife and Plants; Incidental Take Permit Application; Proposed Low-Effect Habitat Conservation Plan and Associated Documents; Charlotte County, FL

AGENCY: Fish and Wildlife Service, Interior.

ACTION: Notice of availability; request for comment/information.

SUMMARY: We, the Fish and Wildlife Service (Service), announce the availability of an incidental take permit (ITP) application and Habitat Conservation Plan (HCP). James A. Goedde (applicant) requests an ITP under the Endangered Species Act of 1973, as amended (Act). The applicant anticipates taking about 0.23 acre of Florida scrub-jay (*Aphelocoma coerulescens*) (scrub-jay) breeding, feeding, and sheltering habitat incidental to lot preparation for the construction of a single-family residence and associated infrastructure in Charlotte County, Florida (project). The destruction of 0.23 acre is expected to result in the take of two families of scrub-jays. The applicant's HCP describes the mitigation and minimization measures proposed to address the effects of the project on the scrub-jay.

DATES: Written comments on the ITP application and HCP should be sent to the South Florida Ecological Services Office (see **ADDRESSES**) and should be received on or before July 25, 2011.

ADDRESSES: You may request documents by email, U.S. mail, or phone (see below). These documents are also available for public inspection by appointment during normal business hours at the office below. Send your comments or requests by any one of the following methods.

E-mail: Trish_Adams@fws.gov. Use ''Attn: Permit number TE45203A–0'' as your message subject line.

Fax: Trish Adams, (772) 562–4288, Attn.: Permit number TE45203A–0.

U.S. mail: Trish Adams, HCP Coordinator, South Florida Ecological Services Field Office, Attn: Permit number TE45203A–0, U.S. Fish and Wildlife Service, 1339 20th Street, Vero Beach, FL 32960–3559.

In-person drop-off: You may drop off information during regular business hours at the above office address.

FOR FURTHER INFORMATION CONTACT: Ms. Trish Adams, HCP Coordinator, South Florida Ecological Services Office, Vero Beach, Florida (see **ADDRESSES**), telephone: 772–562–3909, extension 232.

SUPPLEMENTARY INFORMATION: If you wish to submit comments or information, you may do so by any one of several methods. Please reference permit number TE45203A–0, in such comments. You may mail comments to the Service's South Florida Ecological Services Office (see **ADDRESSES**). You may also comment via e-mail to *trish_adams@fws.gov.* Please also include your name and return address in your e-mail message. If you do not receive a confirmation from us that we have received your e-mail message, contact us directly at the telephone number listed under **FOR FURTHER INFORMATION CONTACT**. Finally, you may hand deliver comments to the Service office listed under **ADDRESSES**.

Before including your address, phone number, e-mail address, or other personal identifying information in your comments, you should be aware that your entire comment—including your personal identifying information—may be made publicly available at any time. While you can ask us in your comment to withhold your personal identifying information from public review, we

cannot guarantee that we will be able to do so.

Applicant's Proposed Project: We received an application from the applicant for an incidental take permit, along with a proposed habitat conservation plan. The applicant requests a 15-year permit under section 10(a)(1)(B) of the Act (87 Stat.884; 16 U.S.C. 1531 *et seq.*). If we approve the permit, the applicant anticipates taking approximately 0.23 acre (0.1 hectares (ha)) of Florida scrub-jay breeding, feeding, and sheltering habitat incidental to land preparation for construction of a single family residence and associated infrastructure in Charlotte County, Florida.

Project construction would take place at latitude 26.9777, longitude –82.0096 in Harbor Heights, Charlotte County, Florida. This lot is within occupied scrub-jay habitat. In 1987, we listed this species as threatened (June 3, 1987; 52 FR 20715). The listing became effective July 6, 1987.

The applicant proposes to mitigate for the loss of 0.23 acre (0.1 ha) of occupied scrub-jay habitat by contribution of 0.46 acre (0.19 ha) of suitable scrub-jay habitat to nearby existing conservation lands within Charlotte County, along with a fee of $1,380.00 for perpetual maintenance of the donated land, within 180 days of permit issuance or before the commencement of clearing and construction activities, whichever is sooner.

Our Preliminary Determination: The Service has made a preliminary determination that the applicant's project, including the proposed mitigation and minimization measures, will individually and cumulatively have a minor or negligible effect on the species covered in the HCP. Therefore, the ITP is a ''low-effect'' project and qualifies as a categorical exclusion under the National Environmental Policy Act (NEPA) (40 CFR 1506.6), as provided by the Department of the Interior Manual (516 DM 2 Appendix 1 and 516 DM 6 Appendix 1), and as defined in our Habitat Conservation Planning Handbook (November 1996). We base our determination that the project qualifies as a low-effect plan on the following three criteria: (1) Implementation of the project would result in minor or negligible effects on federally listed, proposed, and candidate species and their habitats; (2) Implementation of the project would result in minor or negligible effects on other environmental values or resources; and (3) Impacts of the plan, considered together with the impacts of other past, present, and reasonably foreseeable similarly situated projects, would not result, over time, in cumulative effects to environmental values or resources that would be considered significant. As more fully explained in our environmental action statement and associated Low Effect Screening Form, the applicant's proposed project qualifies as a ''low-effect'' project. This preliminary determination may be revised based on our review of public comments that we receive in response to this notice.

Next Steps: The Service will evaluate the HCP and comments submitted thereon to determine whether the application meets the requirements of section 10(a) of the Act. The Service will also evaluate whether issuance of the section 10(a)(1)(B) ITP comply with section 7 of the Act by conducting an intra-Service section 7 consultation. The results of this consultation, in combination with the above findings, will be used in the final analysis to determine whether or not to issue the ITP. If it is determined that the requirements of the Act are met, the ITP will be issued for the incidental take of the Florida scrub-jay.

Authority: This notice is provided pursuant to Section 10 of the Endangered Species Act and NEPA regulations (40 CFR 1506.6).

Dated: June 14, 2011.

Spencer Simon,

Acting Field Supervisor, South Florida Ecological Services Office.

[FR Doc. 2011–15811 Filed 6–23–11; 8:45 am]

BILLING CODE 4310–55–P

DEPARTMENT OF THE INTERIOR

Fish and Wildlife Service

[FWS–R4–R–2010–N200; 40136–1265–0000–S3]

Buck Island, Green Cay, and Sandy Point National Wildlife Refuges, U.S. Virgin Islands; Final Comprehensive Conservation Plan and Finding of No Significant Impact for Environmental Assessment

AGENCY: Fish and Wildlife Service, Interior.

ACTION: Notice of availability.

SUMMARY: We, the Fish and Wildlife Service (Service), announce the availability of our final comprehensive conservation plan (CCP) and finding of no significant impact (FONSI) for the environmental assessment for Buck Island, Green Cay, and Sandy Point National Wildlife Refuges (NWRs). In the final CCP, we describe how we will manage these three refuges for the next 15 years.

ADDRESSES: You may obtain a copy of the CCP by writing to: Mr. Mike Evans, Refuge Manager, Sandy Point National Wildlife Refuge, 3013 Estate Golden Rock, Suite 137, Christiansted, VI 00820–4355. The CCP may also be accessed and downloaded from the Service's Web site: *http://southeast.fws.gov/planning/* under ''Final Documents.''

FOR FURTHER INFORMATION CONTACT: Mr. Mike Evans; telephone: 340/773–4554; e-mail: *Michael_Evans@fws.gov.*

SUPPLEMENTARY INFORMATION:

Introduction

With this notice, we finalize the CCP process for Buck Island, Green Cay, and Sandy Point NWRs. We started this process through a notice in the **Federal Register** on March 12, 2007 (72 FR 11046).

All three refuges are located in the United States Virgin Islands. Sandy Point NWR is situated on the southwestern tip of the island of St. Croix. Green Cay NWR is a small island located several hundred yards north of St. Croix, east of the city of Christiansted. Buck Island NWR is situated several miles south of the island of St. Thomas and the city of Charlotte Amalie. These three refuges are part of the Caribbean Islands National Wildlife Refuge Complex.

Sandy Point NWR provides critical nesting habitat for the federally endangered leatherback sea turtle. Its sandy beaches are also used for nesting by the federally endangered hawksbill sea turtle and the federally threatened green sea turtle. These same sea turtle species are also protected under Territory of the U.S. Virgin Islands regulations.

Green Cay NWR was established in 1977 to protect the federally endangered St. Croix ground lizard. This island refuge provides critical habitat for the largest remaining natural population of this species. Its extirpation from the main island of St. Croix, just several hundred yards away, is generally attributed to the modification and loss of shoreline habitat resulting from human activities and the introduction of predators, such as rats, cats, and dogs. The introduction of the exotic Indian mongoose likely completed the elimination of the species from St. Croix proper. As a result, this species is one of the rarest reptiles in the world and is unique to St. Croix island ecosystems. As part of a cooperative effort with the National Park Service, in May 2008, 57 individual St. Croix ground lizards were translocated to Buck Island Reef National Monument, several miles

away, in order to establish a fourth population of this highly endangered lizard and thus help secure its survival.

Buck Island NWR was established in 1969. The off-shore islands around St. Thomas support a number of critical seabird and migratory bird roosting, breeding, and nesting sites. Some of these off-shore islands have been impacted by varying degrees of development and habitat alteration, making remaining islands even more critical for use by migratory birds. Although Buck Island NWR's natural plant and wildlife communities have been severely impacted by human activity, the island has major potential for habitat restoration, enhancement and support of migratory bird populations, and maintenance of existing wildlife populations, both endemic and migratory. The refuge is home to two rare reptiles endemic to the ''Puerto Rican bank,'' the geological area containing Puerto Rico, Culebra, St. Thomas, and the British Virgin Islands—the Antillean skink and Puerto Rican racer. The island also provides nesting or roosting habitat for the magnificent frigatebird, the red-billed tropicbird, and laughing gulls.

Background

The National Wildlife Refuge System Administration Act of 1966 (16 U.S.C. 668dd–668ee) (Administration Act), as amended by the National Wildlife Refuge System Improvement Act of 1997, requires us to develop a CCP for each national wildlife refuge. The purpose for developing a CCP is to provide refuge managers with a 15-year plan for achieving refuge purposes and contributing toward the mission of the National Wildlife Refuge System, consistent with sound principles of fish and wildlife management, conservation, legal mandates, and our policies. In addition to outlining broad management direction on conserving wildlife and their habitats, CCPs identify wildlife-dependent recreational opportunities available to the public, including opportunities for hunting, fishing, wildlife observation, wildlife photography, and environmental education and interpretation. We will review and update the CCP at least every 15 years in accordance with the Administration Act.

Comments

We made copies of the Draft CCP/EA available for a 30-day public review period as announced in the **Federal Register** on September 17, 2009 (74 FR 47815). Two public meetings were held to receive comments on the Draft CCP/EA—one in Charlotte Amalie, St. Thomas, and one in Frederickstead, St. Croix. We received 10 written comments on the Draft CCP/EA.

Selected Alternatives

Sandy Point NWR

We developed four alternatives for managing Sandy Point NWR. After considering the comments we received and based on the professional judgment of the planning team, we selected Alternative D for implementation. While each of the alternatives provided in varying degrees for wildlife, habitat, and public use, Alternative D was more ambitious than Alternative A, while supporting more wildlife and habitat management than Alternative B and more public use than Alternative C.

The overriding concern reflected in the CCP is that wildlife conservation, especially management and protection of endangered sea turtles, assumes first priority in refuge management. Wildlife-dependent recreation uses (e.g., fishing, wildlife observation, wildlife photography, and environmental education and interpretation) will be emphasized and encouraged.

Existing recovery efforts for the endangered leatherback sea turtle will continue. We will pursue hawksbill and green sea turtle recovery by implementing saturation tagging and nest management. We will continue to protect pelican roosting sites and manage least tern nesting sites, aiming to increase the number of nesting least terns. Landbirds, shorebirds, and waterbirds will benefit as well.

We will begin to conduct status surveys for invertebrates and reptile and amphibian species of special concern. The presence or absence of bats will also be surveyed, and we will enhance habitat and install artificial nest structures for bats. Refuge-wide control of non-native flora and fauna to protect indigenous flora and fauna will be carried out as needed.

We will accelerate efforts to restore the structure, function, and diversity of dry forest habitat. We will begin to actively monitor status and trends on the West End Salt Pond (Salt Pond) as they affect mangroves, wetlands, and wildlife habitat. We will not only protect existing stands and specimens of Vahl's boxwood, but will also conduct recovery activities. Furthermore, we will investigate the potential for establishing a *Catesbaea melanocarpa* population on the refuge. We will actively cooperate with the U.S. Geological Survey and other agencies to develop and implement protocols for monitoring sea level rise and its impacts on habitats.

We will continue to manage and protect cultural resources, particularly the Aklis archaeological site. In addition, we will develop and begin to implement a Cultural Resources Management Plan.

Public use and visitor services will expand somewhat. We will develop an accessible trail and observation deck with expansive views of the Salt Pond. We will aim to develop environmental education and interpretive opportunities around the new refuge headquarters and visitor center to be constructed in the vicinity. We will also allow access to the beach from 10 a.m. to 4 p.m. on weekends, outside of the seasonal closure for leatherback turtle nesting. If staffing permits, we will also provide pedestrian access to the beach during the entire week from 9 a.m. to 5 p.m., outside of the seasonal closure for turtle nesting.

We will continue the existing education and outreach program, such as the turtle watch program, Youth Conservation Corps (YCC) program, periodic news releases, news media interviews, Web site content, school visits, informal contact with refuge visitors, and continuing development of the visitor contact station. Education and outreach efforts will increase. The YCC program will be maintained and expanded in size for two months during the summer. There will be more emphasis on developing partnerships and volunteers.

Green Cay NWR

We developed two alternatives for managing Green Cay NWR. After considering the comments we received and based on the professional judgment of the planning team, we selected Alternative B for implementation. While both alternatives provide for wildlife and habitat, Alternative B will yield greater wildlife and habitat benefits overall than Alternative A, particularly for the St. Croix ground lizard, on whose behalf the refuge was originally established. Alternative B will also offer greater opportunities for the public, even while maintaining the general refuge closure.

We will maintain or expand upon all existing programs. To promote recovery of the endangered St. Croix ground lizard, we will continue existing programs of reforestation, rat and invasive plant control, and population monitoring. We will also maintain closure of the island to public access, to avoid accidental direct mortality and habitat degradation. In addition, we will develop a habitat restoration plan within 3 years, with the aim of

improving habitat quality for the ground lizard.

We will also continue management efforts on behalf of nesting and roosting brown pelicans and white-crowned pigeons. We will continue our habitat recovery (reforestation) efforts so as to complete 100 percent of the area intended for reforestation by the end of the 15-year planning period. An important part of accelerating habitat recovery will be to increase the control of invasive plants and invasive animals.

We will continue to protect and manage Green Cay NWR's cultural resources. Also, we will develop and begin to implement a Cultural Resources Management Plan. To conduct outreach and education, we will continue to maintain the refuge Web site, distribute information, maintain signage on the island identifying it as a national wildlife refuge closed to the public, and conduct periodic presentations off-refuge. These efforts will be augmented by installing larger signs that can be seen and read from a greater distance, expanding outreach efforts to nearby hotels, and considering alternatives to visitation within the refuge itself, such as offering or promoting boat and kayak tours around the island.

Buck Island NWR

We developed two alternatives for managing Buck Island NWR. After considering the comments we received and based on the professional judgment of the planning team, we selected Alternative B for implementation. While both alternatives will result in benefits to some extent for wildlife, habitat, and public use, Alternative B is more ambitious than Alternative A, and thus will yield greater benefits for both wildlife and the public. In general, Alternative B maintains and expands upon all programs of Alternative A.

We will strive to provide more active management of the island's indigenous wildlife, particularly species of concern. We will draft and begin implementing an inventorying and monitoring plan for the slipperyback skink, Puerto Rican racer, magnificent frigatebird, and red-billed tropicbird.

We will continue to monitor for rat reinvasions. To pursue and promote habitat recovery on Buck Island NWR, we will develop and begin to implement a Habitat Restoration Plan. We will increase control of invasive plants and animals using appropriate means, and will evaluate the effectiveness of different methods of control.

We will continue to manage cultural resources, particularly the historic lighthouse. However, we will also evaluate the condition and safety of the lighthouse and decide on the feasibility of preservation or restoration. In addition, we will develop and begin to implement a Cultural Resources Management Plan.

With regard to conducting outreach and education, we will continue to maintain the refuge Web site, distribute information, maintain limited signage on the island, and make periodic presentations off-refuge. We will continue to cooperate with the Virgin Islands Department of Planning and Natural Resources on joint wildlife and habitat management efforts for Buck Island and adjacent Capella Island. Also, we will expand cooperative education and interpretive efforts with the city of Charlotte Amalie and ecotourism companies which bring visitors to offshore waters to explore coral reefs. We will also explore the development of a friends group, to provide a more active management presence on the island.

Authority: This notice is published under the authority of the National Wildlife Refuge System Improvement Act of 1997, Pub. L. 105–57.

Dated: October 1, 2010.

Mark J. Musaus,

Acting Regional Director.

Editorial Note: This document was received in the Office of the Federal Register on June 21, 2011.

[FR Doc. 2011–15819 Filed 6–23–11; 8:45 am]

BILLING CODE 4310–55–P

DEPARTMENT OF THE INTERIOR

Bureau of Land Management

[LLNM004200.L13200000.GA0000]

Notice of Intent To Prepare a Resource Management Plan Amendment (RMPA) and Associated Environmental Assessment Addressing Four Federal Coal Lease Applications in Haskell and LeFlore Counties, OK

AGENCY: Bureau of Land Management, Interior.

ACTION: Notice of Intent.

SUMMARY: In compliance with the National Environmental Policy Act (NEPA) of 1969, as amended, and the Federal Land Policy and Management Act of 1976, as amended, the Bureau of Land Management (BLM) Oklahoma Field Office intends to prepare an amendment to the 1994 Oklahoma Resource Management Plan, as amended, and associated Environmental Assessment (EA) in response to four coal lease applications covering lands in Haskell and LeFlore Counties, Oklahoma. By this notice, the Oklahoma Field Office announces the beginning of the scoping process to solicit public comments and identify issues.

DATES: This notice initiates the public scoping process for the Draft Resource Management Plan (RMP) amendment/EA. Comments on issues may be submitted in writing until August 8, 2011. The date(s) and location(s) of any scoping meetings will be announced at least 15 days in advance through local media, newspapers and the BLM Web site at: *http://www.blm.gov/nm/st/en/fo/Oklahoma_Field_Office.html.* We will provide additional opportunities for public participation upon publication of the Draft RMP amendment/EA.

Comments: You may submit comments on issues and planning criteria related to the four Federal coal lease applications in Haskell and LeFlore Counties, Oklahoma, RMP amendment/EA by any of the following methods:

- *E-mail: rwymer@blm.gov.*
- *Fax:* (918) 621–4130.
- *Mail:* RMPA/EA Comments, BLM, Oklahoma Field Office, 7906 E 33rd Street, Suite 101, Tulsa, Oklahoma 74145–1352.

Documents pertinent to this proposal may be examined at the Oklahoma Field Office.

FOR FURTHER INFORMATION CONTACT: For further information and/or to have your name added to our mailing list, contact: Laurence Levesque or Richard Wymer, Co-Team Leaders, BLM, Oklahoma Field Office, 7906 E 33rd Street, Suite 101, Tulsa, Oklahoma 74145–1352, phone (918) 621–4100.

SUPPLEMENTARY INFORMATION: During the period June 2008 to April 2010, the BLM received three coal lease modification applications and one competitive coal lease application from Farrell-Cooper Mining Company, Georges Colliers Inc., and Mining Systems Corporation. These applications were for resources located outside the areas that the Oklahoma RMP designated as available for coal leasing. The RMP amendment will evaluate the four Lease Application Areas to determine suitability for further leasing consideration. The RMP amendment will be prepared in accordance with guidance provided in BLM Land Use Planning Handbook (H–1601–1). The Lease Application Areas total approximately 2,500 acres of previously unleased coal and are part of the Federal mineral estate, but have not previously undergone land-use planning analysis. The Lease Application Areas total 2,500 acres of Federal mineral

estate administered by the BLM, and the surface is privately owned.

The sizes and locations of these four Lease Application Areas are as follows:

Indian Meridian, Oklahoma

T. 8 N., R. 22 E.,
Sec. 23, N½NE¼SE¼;
Sec. 24, SE¼NE¼SE¼, W½NE¼SE¼, N½SE¼SE¼, SE¼SE¼SE¼, NW¼SE¼, and N½N½SW¼;
Sec. 25, NE¼NE¼NE¼;

T. 8 N., R. 23 E.,
Sec. 19, S½SE¼SE¼, S½N½SE¼SE¼, S½SW¼SE¼, S½N½SW¼SE¼, S½SE¼SW¼, and S½N½SE¼SW¼;
Sec. 30, N½NW¼NW¼, and NW¼NE¼NW¼;

The area described contains 290 acres, according to the official plat of the survey of the said lands, on file with the BLM.

T. 9 N., R. 26 E.,
Sec. 21, N½SE¼, NE¼SW¼, and SE¼SE¼NE¼;
Sec. 22, S½, and S½S½N½;
Sec. 23, SW¼SW¼, NW¼SE¼SW¼, N½SW¼, and S½S½NW¼;
Sec. 26, NW¼NW¼NW¼;
Sec. 27, N½N½N½;

The area described contains 790 acres, according to the official plat of the survey of the said lands, on file with the BLM.

T. 10 N., R. 21 E.,
Sec. 28, SW¼, and W½SE¼;
Sec. 33, NW¼, NW¼NE¼, and N½N½N½SW¼;

The area described contains 460 acres, according to the official plat of the survey of the said lands, on file with the BLM.

T. 8 N., R. 22 E
Sec.11, E½W½, and E½;
Sec. 12, NW¼, W½NE¼, N½SW¼, NW¼SE¼, and a tract of land described as follows: Beginning at the southwest corner of Section 12, T. 8 N., R., 22 E., thence 111.61 feet N. 0°1′ W., along the west side of said section to point of beginning. Thence 5326.57 feet N. 80°45′30″ E., to a point on the east line of said section, thence 579.46 feet North along the east line of said section, thence 1316.39 feet S. 89°24′44″ W., to a point on the west line of the NE quarter of the SE quarter of said section, thence 182.04 feet S. 0°4′31″ E., along the west line of the NE quarter of the SE quarter of said section to the SW corner of the NE quarter of the SE quarter of said section, thence 1316.13 feet S. 89°33′ W., along the north line of the SW quarter of the SE quarter to the NW corner of the SW quarter of the SE quarter of said section, thence 2625.69 feet S. 89°33′ W., along the north lines of the SE quarter of the SW quarter and the SW quarter of the SW quarter to the NW corner of the SW quarter of the SW quarter of said section, thence 1208.39 feet S. 0°1′ E., along the west line of said section to the point of beginning.
Sec. 14, a tract of land described as follows: Beginning at the northeast corner of Section 14, T. 8 N., R. 22 E., thence 682.72 feet S. 89°40 W., along the north line of said section to the point of beginning. Thence 1946.72 feet S. 89°40′ W., along the north line of said section to the north quarter corner, thence 794.04 feet S. 0°1′8″ W., along the west line of the NE quarter of said section, thence 2106.95 feet N. 67°31′38″ E., to the point of beginning.

The area described contains 960 acres, according to the official plat of the survey of the said lands, on file with the BLM.

Opportunities for the public to be informed and participate will occur throughout the planning process. To ensure local community participation and input, public scoping meetings will be held in two towns strategically located near the lease application areas. Early participation by all interested parties is encouraged and will help guide the planning process. A list of attendees at each meeting and a summary of their input will be available to the public and participants may clarify their input for 30 days. The results of scoping will be sent to all parties on the mailing list for this project in a newsletter or scoping report.

The purpose of the public scoping process is to determine relevant issues that will influence the scope of the environmental analysis, including alternatives, and guide the process for developing the EIS. At present, the BLM has identified the following preliminary issues: Access and traffic; public interest/benefits regarding the extraction of the coal; identification of resource values on the private lands; and water quality. Preliminary management concerns include the following: Special status species of plants and animals; maintaining government-to-government relationships with tribal governments; socioeconomics, potential disproportionate impacts on disadvantaged communities resulting from coal lease decisions (Environmental Justice Executive Order 12898); potential for spread of noxious weeds; protection of designated streams (Clean Water Act, Section 303–d); and application of unsuitability criteria. The public is encouraged to help identify any additional issues or concerns during the initial scoping phase. Industry and other interested parties are asked to provide any information that will be useful in applying the Federal Coal Management Program defined in 43 CFR 3420 and 43 CFR 3430, including application of coal planning criteria outlined in 43 CFR 1600. Information resulting from this call for information will be used to determine potential for coal development in the application areas and likelihood of conflict with other resources.

The issue of Federal coal leasing and development will include:

1. Determining if these areas are acceptable for further coal leasing consideration with standard stipulations;

2. Determining if these areas are acceptable for consideration with special stipulations; and

3. Determining if these areas are unacceptable for further coal leasing consideration.

Any individual, business entity, or public body may participate in this process by providing coal or other resource information under this notice.

Planning criteria will be developed during the initial public scoping to help guide the planning effort. Preliminary planning criteria being considered include the following: Recognize valid existing rights; comply with existing laws, executive orders, regulations, and BLM policy and program guidance; seek public input; consider adjoining lands to minimize land-use conflict when making decisions; consider planning jurisdictions of other Federal agencies and State, local, and tribal governments; develop reasonable and sound alternatives; use current scientific data to evaluate appropriate strategies; and consider public welfare and safety.

Written comments should address one or more of the following: (1) Issues to be considered; (2) Whether the planning criteria are adequate for the issues; (3) Feasible and reasonable alternatives to examine; or (4) Relevant coal or other resource information.

The BLM will utilize and coordinate the NEPA commenting process to satisfy the public involvement process for Section 106 of the National Historic Preservation Act (16 U.S.C. 470f) as provided for in 36 CFR 800.2(d)(3). Native American tribal consultations will be conducted in accordance with policy, and tribal concerns will be given due consideration, including impacts on Indian trust assets. Federal, State, and local agencies, along with other stakeholders that may be interested or affected by the BLM's decision on this project, are invited to participate in the scoping process and, if eligible, may request or be requested by the BLM to participate as a cooperating agency.

Before including your address, phone number, email address, or other personal identifying information in your comment, you should be aware that your entire comment—including your personal identifying information—may be made publicly available at any time. While you can ask us in your comment to withhold your personal identifying information from public review, we

cannot guarantee that we will be able to do so.

Authority: 40 CFR 1501.7; 43 CFR 1610.2.

Linda S.C. Rundell,

State Director.

[FR Doc. 2011–15808 Filed 6–23–11; 8:45 am]

BILLING CODE 4313–AW–P

DEPARTMENT OF THE INTERIOR

Bureau of Land Management

[ORE000.L58820000 PH0000 LXRSEE990000 HAG11–0265]

Notice of Public Meetings for the Eugene District Resource Advisory Committee

AGENCY: Bureau of Land Management, Interior.

ACTION: Notice of public meetings.

SUMMARY: In accordance with the Emergency Economic Stabilization Act of 2008, Title VI, Secure Schools and Community Self-Determination Program (H.R. 1424), the Federal Land Policy and Management Act, and the Federal Advisory Committee Act of 1972, the U.S. Department of the Interior, Bureau of Land Management (BLM), Eugene District Resource Advisory Committee will meet as indicated below.

DATES: The meetings will be held on August 4, 2011, beginning at 9 a.m. and ending at approximately 12 p.m.; August 12, 2011, beginning at 8:30 a.m. and ending at approximately 5 p.m.; and September 1, 2011, beginning at 8:30 a.m. and ending at approximately 5 p.m. If unfinished business necessitates, a meeting will be held on September 2, 2011, beginning at 8:30 a.m. and ending at 5 p.m. All times are Pacific Daylight Saving Time.

ADDRESSES: The meetings will take place at the BLM, Eugene District Office, Springfield Interagency Center, 3106 Pierce Parkway, Suite E, Springfield, OR 97477.

FOR FURTHER INFORMATION CONTACT: Patricia K. Johnston, Bureau of Land Management, P.O. Box 10226, Eugene, Oregon 97440–2226, (541) 683–6181 or e-mail *pat_johnston@blm.gov*. Persons who use a telecommunications device for the deaf (TDD) may call the Federal Information Relay Service (FIRS) at 1–800–877–8339 to contact the above individual during normal business hours. The FIRS is available 24 hours a day, 7 days a week, to leave a message or question with the above individual. You will receive a reply during normal business hours.

SUPPLEMENTARY INFORMATION: The Eugene District Resource Advisory Committee was appointed originally by the Secretary of the Interior pursuant to the Secure Rural Schools and Community Self-Determination Act of 2000 (Pub. L. 106–393) and re-authorized by the Emergency Economic Stabilization Act of 2008, Title VI, Secure Schools and Community Self-Determination Program (H.R. 1424). Topics to be discussed by the Eugene District Resource Advisory Committee at these meetings include reviewing project proposals meeting the requirements under Section 201, H.R. 1424, ''Title II—Special Projects on Federal Land,'' recommending funding for such projects to the Secretary of the Interior, and other matters as may reasonably come before the council.

All meetings are open to the public in their entirety. Public comment is generally scheduled from 11:30 a.m. to 12 p.m., each meeting session. The amount of time scheduled for public presentations and meeting times may be extended when the authorized representative considers it necessary to accommodate all who seek to be heard regarding matters on the agenda.

Virginia Grilley,

Eugene District Manager.

[FR Doc. 2011–15835 Filed 6–23–11; 8:45 am]

BILLING CODE 4310–33–P

DEPARTMENT OF THE INTERIOR

Bureau of Land Management

[LLNVW03500.L12320000.EA0000 .LVRDNV190000.241A; MO#4500020764; 11–08807; TAS: 14X5017]

Notice of Temporary Closures and Temporary Restrictions on Specific Uses of Public Lands in Pershing County, NV

AGENCY: Bureau of Land Management, Interior.

ACTION: Notice.

SUMMARY: Notice is hereby given that under the authority of the Federal Land Policy and Management Act of 1976 (FLPMA), as amended, the Bureau of Land Management (BLM) Winnemucca District, Black Rock Field Office, will implement and enforce temporary closures and temporary restrictions to protect public safety and resources on public lands within and adjacent to the Burning Man event on the Black Rock Desert playa.

DATES: The temporary closures and temporary restrictions will be in effect from August 1, 2011 through September 19, 2011 and August 29, 2011 through September 5, 2011.

FOR FURTHER INFORMATION CONTACT: Gene Seidlitz, BLM District Manager, Winnemucca District, 5100 E. Winnemucca Boulevard, Winnemucca, Nevada 89445–2921, *telephone:* (775) 623–1500, *e-mail: gene_seidlitz@blm.gov.*

Persons who use a telecommunications device for the deaf (TDD) may call the Federal Information Relay Service (FIRS) at 1–800–877–8339 to contact the above individual during normal business hours. The FIRS is available 24 hours a day, 7 days a week, to leave a message or question with the above individual. You will receive a reply during normal hours.

SUPPLEMENTARY INFORMATION: These temporary closures and temporary restrictions affect public lands at and adjacent to the Burning Man event permitted on the Black Rock Desert playa within the Black Rock Desert-High Rock Canyon Emigrant Trails National Conservation Area in Pershing County, Nevada. The legal description of the affected public lands is:

Mount Diablo Meridian, Nevada

Unsurveyed T. 33 N., R. 24 E.,

Secs. 1 and 2;
Sec. 3;
Sec. 4, portion east of Washoe County Road 34;
Sec. 5;
Sec. 8, NE¼;
Sec. 9, N½;
Sec. 10, N½;
Sec. 11, N½.

Unsurveyed T. 33½; N., R. 24 E.,

Secs. 25, 26, and 27;
Sec. 28, portion east of Washoe County Road 34;
Sec. 33, portions east of Washoe County Road 34;
Secs. 34, 35, and 36.

Unsurveyed T. 34 N., R. 24 E.,

Sec. 23, S½;
Sec. 24, S½;
Secs. 25 and 26;
Sec. 27, SE¼, E½NE½, E½SW¼;
Sec. 33, SE¼, S½NE¼, NE¼NE¼;
Secs. 34, 35, and 36.

T. 33 N., R. 25 E.,

Sec. 4, Lots 2, 3, 4, and 5.

Unsurveyed T. 34 N., R. 25 E.,

Sec. 16, S½;
Sec. 21;
Sec. 22, SW¼, W½NW¼;
Sec. 27, W½;
Sec. 28;
Sec. 33;
Sec. 34, W½.

The public closure area comprises 14,153 acres, more or less.

Within the public closure area is the event area, which is defined as the portion of the public closure area (1)

Entirely contained within the event perimeter fence; (2) Within 50 feet and outside the event perimeter fence; (3) Within 25 feet and outside the event access road; and (4) The aircraft parking area outside the event perimeter fence.

The Burning Man event takes place within Pershing County, a rural county with a small population and a small Sheriff's Department. Pershing County has limited ability to provide additional law enforcement officers to work at the event. These temporary closures and temporary restrictions are necessary to enable the BLM law enforcement personnel to provide for public safety and protect the environment on public lands, as well as support State and local law enforcement agencies with enforcement of existing laws.

The temporary closures and temporary restrictions are necessary to provide a safe environment for the participants of the Burning Man event and to members of the public visiting the Black Rock Desert, and to protect public land resources by addressing law enforcement and public safety concerns associated with the Burning Man event. The Burning Man event is held on public lands administered by the BLM. It is expected to attract approximately 50,000 participants to a remote rural area, far from urban infrastructure and support, including law enforcement, public safety, transportation, and communication services. During the event, Black Rock City, the temporary city associated with the event, becomes the tenth largest population area in Nevada. This event is authorized on public lands under Special Recreation Permit #NVW03500–11–01.

The vast majority of Burning Man event participants do not cause any problems for the event organizers or the BLM. Actions by a few participants at previous events have resulted in law enforcement and public safety incidents similar to those observed in urban areas of similar size. Incidents that have required BLM law enforcement action in prior years include the following: Aircraft crashes; motor vehicle accidents with injuries both within and outside the event (a temporary fence is installed around the event perimeter); fighting; sexual assaults; assaults on law enforcement officers; reckless or threatening behavior; crimes against property; crowd control issues; issues associated with possession and use of alcoholic beverages; persons acting in a manner where they may pose a danger to themselves or to others; possession, use, and distribution of controlled substances; and increased use of public lands outside the event perimeter.

The BLM will post information signs and maps about the temporary closures and temporary restrictions at main entry points around the area and at the BLM Winnemucca District Office and at the Black Rock Visitor Center.

Under the authority of Section 303(a) of the Federal Land Policy and Management Act of 1976 (43 U.S.C. 1733 (a)), 43 CFR 8360.0–7, and 43 CFR 8364.1, the BLM will enforce the following closures and restrictions within and adjacent to the Burning Man event on the Black Rock Desert playa:

I. Event Area Restrictions—Between August 1, 2011, and September 19, 2011 Inclusive

A. Aircraft Landing

The event area is closed to aircraft landing, taking off, or taxiing. Aircraft is defined in Title 18, U.S.C., section 31 (a)(1) and includes lighter-than-air craft and ultra-light craft. The following exceptions apply:

1. All aircraft operations to include ultra-light and helicopter landings/take-offs will occur at the designated event landing strip. The authorized event landing strip is a designated and Federal Aviation Administration approved public strip.

2. Only helicopters providing emergency medical services may land at the designated Emergency Medical Services helicopter pad or at other locations when required for medical incidents. The BLM authorizing officer may approve other helicopter landings and take-offs when deemed necessary for the benefit of the law enforcement operation.

3. Landings or take-offs of lighter-than-air craft previously approved by the BLM authorized officer.

B. Alcohol

1. Possession of an open container of an alcoholic beverage by the driver or operator of any motorized vehicle, whether or not the vehicle is in motion, is prohibited.

2. Possession of alcohol by minors

(a) The following are prohibited:

(1) Consumption or possession of any alcoholic beverage by a person under 21 years of age on public lands.

(2) Selling, offering to sell, or otherwise furnishing or supplying any alcoholic beverage to a person under 21 years of age on public lands.

(b) This section does not apply to the selling, handling, serving or transporting of alcoholic beverages by a person in the course of his lawful employment by a licensed manufacturer, wholesaler or retailer of alcoholic beverages.

3. Operation of a motor vehicle while under the influence

(a) Title 43 CFR 8341.1(f)3 prohibits the operation of an off-road motor vehicle on public land while under the influence of alcohol, narcotics, or dangerous drugs.

(b) In addition to the prohibition found in 43 CFR 8341.1(f)3, it is prohibited for any person to operate or be in actual physical control of a motor vehicle while:

(1) The operator is under the combined influence of alcohol, a drug, or drugs to a degree that renders the operator incapable of safe operation of that vehicle; or

(2) The alcohol concentration in the operator's blood or breath is 0.08 grams or more of alcohol per 100 milliliters of blood or 0.08 grams or more of alcohol per 210 liters of breath.

(c) Tests:

(1) At the request or direction of any law enforcement officer authorized by the Department of the Interior to enforce this closure and restriction order, who has probable cause to believe that an operator of a motor vehicle has violated a provision of paragraph (a) or (b) of this section, the operator shall submit to one or more tests of the blood, breath, saliva, or urine for the purpose of determining blood alcohol and drug content.

(2) Refusal by an operator to submit to a test is prohibited and proof of refusal may be admissible in any related judicial proceeding.

(3) Any test or tests for the presence of alcohol and drugs shall be determined by and administered at the direction of an authorized person.

(4) Any test shall be conducted by using accepted scientific methods and equipment of proven accuracy and reliability operated by personnel certified in its use.

(d) Presumptive levels

(1) The results of chemical or other quantitative tests are intended to supplement the elements of probable cause used as the basis for the arrest of an operator charged with a violation of paragraph (a) of this section. If the alcohol concentration in the operator's blood or breath at the time of testing is less than alcohol concentrations specified in paragraph (b)(2) of this section, this fact does not give rise to any presumption that the operator is or is not under the influence of alcohol.

(2) The provisions of paragraph (d)(1) of this section are not intended to limit the introduction of any other competent evidence bearing upon the question of whether the operator, at the time of the alleged violation, was under the influence of alcohol, a drug or multiple drugs, or any combination thereof.

4. Definitions:

(a) Open container: Any bottle, can, or other container which contains an alcoholic beverage, if that container does not have a closed top or lid for which the seal has not been broken. If the container has been opened one or more times, and the lid or top has been replaced, that container is an open container.

(b) Possession of an open container includes any open container that is physically possessed by the driver or operator, or is adjacent to and reachable by that driver or operator. This includes but is not limited to containers in a cup holder or rack adjacent to the driver or operator, containers on a vehicle floor next to the driver or operator, and containers on a seat or console area next to a driver or operator.

C. Drug Paraphernalia

1. The possession of drug paraphernalia is prohibited.

2. *Definition:* Drug paraphernalia means all equipment, products and materials of any kind which are used, intended for use, or designed for use in planting, propagating, cultivating, growing, harvesting, manufacturing, compounding, converting, producing, preparing, testing, analyzing, packaging, repackaging, storing, containing, concealing, injecting, ingesting, inhaling or otherwise introducing into the human body a controlled substance in violation of any State or Federal law, or regulation issued pursuant to law.

D. Disorderly Conduct

1. Disorderly conduct is prohibited.

2. *Definition:* Disorderly conduct means that an individual, with the intent of recklessly causing public alarm, nuisance, jeopardy, or violence; or recklessly creating a risk thereof:

(a) Engages in fighting or violent behavior.

(b) Uses language, an utterance or gesture, or engages in a display or act that is physically threatening or menacing, or done in a manner that is likely to inflict injury or incite an immediate breach of the peace.

(c) Obstructs, resists or attempts to elude a law enforcement officer, or fails to follow their orders or directions.

E. Eviction of Persons

1. The event area is closed to any person who:

(a) Has been evicted from the event by the permit holder, Black Rock City LLC, (BRC LLC) whether or not the eviction was requested by BLM.

(b) Has been ordered by a BLM law enforcement officer to leave the area of the permitted event.

2. Any person evicted from the event forfeits all privileges to be present within the perimeter fence or anywhere else within the event area even if they possess a ticket to attend the event.

F. Fires

The ignition of fires on the surface of the Black Rock Playa without a burn blanket or burn pan is prohibited.

G. Fireworks

The use, sale or possession of personal fireworks is prohibited except for uses of fireworks approved by BRC LLC and used as part of a Burning Man sanctioned art burn event.

H. Motor Vehicles

1. The event area is closed to motor vehicle use, except as provided below.

Motor vehicles may be operated within the event area under these circumstances:

(a) Participant arrival and departure on designated routes;

(b) Vehicles operated by BRC LLC staff or contractors and service providers on behalf of BRC LLC. During the event, from 12:01 a.m. Monday, August 29, 2011, through 11:59 p.m. Monday, September 5, 2011, these vehicles must display evidence of event registration at all times in such manner that it is visible to the rear of the vehicle while the vehicle is in motion;

(c) BLM, medical, law enforcement, and firefighting vehicles;

(d) Mutant vehicles, art cars, vehicles used by disabled drivers and displaying disabled driver license plates or placards, or other vehicles registered with the BRC LLC organizers and operated within the scope of that registration. Prior to the commencement of the event and official issuance of registration documents, such vehicles may be operated for arrival, testing and demonstration purposes only. During the event, from 12:01 a.m. Monday, August 29, 2011, through 11:59 p.m. Monday, September 5, 2011, such vehicles must display evidence of registration at all times in such manner that it is visible to the rear of the vehicle while the vehicle is in motion;

(e) Motorized skateboards or Go-Peds with or without handlebars.

2. Definitions:

(a) A motor vehicle is any device designed for and capable of travel over land and which is self-propelled by a motor, but does not include any vehicle operated on rails or any motorized wheelchair.

(b) Motorized wheelchair means a self-propelled wheeled device, designed solely for and used by a mobility-impaired person for locomotion.

I. Public Camping

The event area is closed to public camping with the following exception: Burning Man event ticket holders who are camped in designated areas provided by BRC LLC, and ticket holders who are camped in the authorized pilot camp. BRC LLC authorized staff, contractors, and BLM authorized event management related camps are exempt from this closure.

J. Public Use

The event area is closed to use by members of the public unless that person: Possesses a valid ticket to attend the event; is an employee or authorized volunteer with the BLM, a law enforcement agency, emergency medical service provider, fire protection provider, or another public agency working at the event and the employee is assigned to the event; is a person working at or attending the event on behalf of the event organizers, BRC LLC; or is authorized by BRC LLC to be onsite prior to the commencement of the event for the primary purpose of constructing, creating, designing or installing art, displays, buildings, facilities or other items and structures in connection with the event.

K. Waste Water Discharge

The dumping or discharge to the ground of gray water is prohibited. Gray water is water that has been used for cooking, washing, dishwashing, or bathing and contains soap, detergent, food scraps, or food residue.

L. Weapons

1. The possession of any weapon is prohibited.

2. The discharge of any weapon is prohibited.

3. The prohibitions above shall not apply to county, State, tribal, and Federal law enforcement personnel, or any person authorized by Federal law to possess a weapon. ''Art projects'' that include weapons and are sanctioned by BRC LLC will be permitted after obtaining authorization from the BLM authorized officer.

4. Definitions:

(a) Weapon means a firearm, compressed gas or spring powered pistol or rifle, bow and arrow, cross bow, blowgun, spear gun, hand-thrown spear, sling shot, irritant gas device, electric stunning or immobilization device, explosive device, any implement designed to expel a projectile, switch-blade knife, any blade which is greater than 10 inches in length from the tip of the blade to the edge of the hilt or finger guard nearest the blade (*e.g.,* swords, dirks, daggers,

machetes), or any other weapon the possession of which is prohibited by State law. Exception: The regulation does not apply in a kitchen or cooking environment or where an event worker is wearing or utilizing a construction knife for their duties at the event.

(b) Firearm means any pistol, revolver, rifle, shotgun, or other device which is designed to, or may be readily converted to expel a projectile by the ignition of a propellant.

(c) Discharge means the expelling of a projectile from a weapon.

II. Public Closure Area

A. Between August 1, 2011 and September 19, 2011, Inclusive

1. Public Camping

The public closure area is closed to public camping.

2. Discharge of Weapons

Discharge of weapons as defined in paragraph (L)(2) of Section (I) is prohibited.

B. Between August 29, 2011 and September 5, 2011, Inclusive

1. Aircraft Landing

The public closure area is closed to aircraft landing, taking off, or taxiing except as described in paragraph (A) of Section I.

2. Disorderly Conduct

Disorderly conduct as defined in paragraph (D)(2) of Section I is prohibited.

3. Eviction of Persons

(a) The public closure area is closed to any person who:

(1) Has been evicted from the event by the permit holder, BRC LLC, whether or not such eviction was requested by BLM.

(2) Has been ordered by a BLM law enforcement officer to leave the area of the permitted event.

(b) Any person evicted from the event forfeits all privileges to be present within the public closure area even if he or she possesses a ticket to attend the event.

4. Fireworks

The use, sale or possession of personal fireworks is prohibited.

5. Public Use

Public use is prohibited, except for:

(a) passage through, without stopping, the public closure area on the west or east playa roads; and

(b) pedestrians with Burning Man tickets outside the fence.

6. Motor Vehicles

The public closure area is closed to motor vehicle use, except for passage through, without stopping, the public closure area on the west or east playa roads. Motor vehicle is defined in paragraph (H)(2) of Section (I).

7. Waste Water Discharge

The dumping or discharge to the ground of gray water is prohibited.

8. Weapons

The possession of any weapon as defined in paragraph (L)(4) of Section (I) is prohibited except weapons within motor vehicles passing through the closure area, without stopping on the west or east playa roads.

Any person who violates the above rules and restrictions may be tried before a United States Magistrate and fined no more than $1,000, imprisoned for no more than 12 months, or both. Such violations may also be subject to the enhanced fines provided for at 18 U.S.C. 3571.

Authority: 43 CFR 8364.1.

Gene Seidlitz,

District Manager, Winnemucca District.

[FR Doc. 2011–15818 Filed 6–23–11; 8:45 am]

BILLING CODE 4310–HC–P

DEPARTMENT OF THE INTERIOR

National Park Service

[NPS–WASO–NRNHL–0611–7651; 2280–665]

National Register of Historic Places; Notification of Pending Nominations and Related Actions

Nominations for the following properties being considered for listing or related actions in the National Register were received by the National Park Service before June 3, 2011. Pursuant to section 60.13 of 36 CFR Part 60, written comments are being accepted concerning the significance of the nominated properties under the National Register criteria for evaluation. Comments may be forwarded by United States Postal Service, to the National Register of Historic Places, National Park Service, 1849 C St., NW., MS 2280, Washington, DC 20240; by all other carriers, National Register of Historic Places, National Park Service, 1201 Eye St., NW., 8th floor, Washington, DC 20005; or by fax, 202–371–6447. Written or faxed comments should be submitted July 11, 2011. Before including your address, phone number, e-mail address, or other personal identifying information in your comment, you should be aware that your entire comment—including your personal identifying information—may be made publicly available at any time. While you can ask us in your comment to withhold your personal identifying information from public review, we cannot guarantee that we will be able to do so.

Alexandra Lord,

Acting Chief, National Register of Historic Places/National Historic Landmarks Program.

ALABAMA

Randolph County

Wadley Railroad Depot, Broad St. at NE. corner of Tallapoosa St., Wadley, 11000428

CALIFORNIA

Los Angeles County

Hafley, Olan G. and Aida T., House, 5561 E. La Pasada St., Long Beach, 11000429

Monterey County

Republic Cafe, 37 Soledad St., Salinas, 11000430

Orange County

WILD GOOSE (yacht), 2431 West Coast Hwy., Newport Beach, 11000431

Riverside County

Grand Boulevard Historic District, Grand Blvd., Corona, 11000432

Siskiyou County

Forest House, 4204 CA 3, Yreka, 11000433

CONNECTICUT

Fairfield County

Camp, Issac, Property, Address Restricted, Norwalk, 11000434

Hartford County

Fairfield Avenue Historic District, Roughly along Fairfield Ave. from Trinity College to Cedar Hill Cemetery, Hartford, 11000435

FLORIDA

Volusia County

South Ridgewood Elementary School, 747 S. Ridgewood Ave., Daytona Beach, 11000436

HAWAII

Maui County

Baldwin, Fred C., Memorial Home, 1813 Baldwin Ave., Makawao, 11000437

INDIANA

La Porte County

German St. Paul's Church, 5 Beech St., Otis, 11000438

MISSOURI

Adair County

Journal Printing Company Building, 119 S. Elson St., Kirksville, 11000439

Butler County

North Main Street Historic District, (Poplar Bluff MPS) 400 blk. of N. Main St., Poplar Bluff, 11000440

Jackson County

Simpson-Yeomans-Country Side Historic District (Boundary Increase), E. 52nd St., Brookside Blvd., Oak, E. 57th & Main Sts., Kansas City, 11000441

Polk County

North Ward School, 201 W. Locust St., Bolivar, 11000442

St. Louis Independent City

Central Carondelet Historic District (Boundary Increase IV), Roughly bounded by S. Broadway, Pennsylvania Ave., I 55, Bates & Delor Sts., St. Louis (Independent City), 11000443

Lange, William A., Subdivision, 4101–4235 Florissant Ave., 4128–4150 Glasgow Ave., 2141–2325 Angelica St., 4111–4220 N. 22nd St., St. Louis (Independent City), 11000444

Twain, Mark, Elementary School, (St. Louis Public Schools of William B. Ittner MPS) 5316 Ruskin Ave., St. Louis (Independent City), 11000445

Western Electric—Southwestern Bell Telephone Distribution House, 4250 Duncan St., St. Louis (Independent City), 11000446

NEW JERSEY

Hunterdon County

Headquarters Historic District, Rosemont-Ringoes Rd., Zentek Rd. (Delaware Township), Sergeantsville, 11000447

Morris County

Methodist Episcopal Church of Hibernia, 419 Green Pond Rd. (Rockaway Township), Hibernia, 11000448

Vanness—Linen House, 211 Hamburg Tnpk., Riverdale Borough, 11000449

NEW YORK

Montgomery County

Van Wie Farmstead, 269 Brower Rd., McKinley, 11000450

Rockland County

Gurnee—Sherwood House, 29 Spook Hill Rd., Wesley Hills, 11000451

Saratoga County

Best, Abraham, House, 113 Vischer Ferry Rd., Vischer Ferry, 11000452

Westchester County

Hartsdale Railroad Station, 1 E. Hartsdale Ave., Hartsdale, 11000453

TENNESSEE

Davidson County

Fort Nashborough, Riverfront Park on 1st Ave., Nashville, 11000454

Tennessee State Office Building, 6th Ave., N. & Charlotte Ave., Nashville, 11000455

Franklin County

Asia School, 525 Asia Rd., Asia, 11000456

Knox County

Contractor's Supply, Inc., 1909 Schofield St., Knoxville, 11000457

Robertson County

Russell House, 2520 Memorial Blvd., Springfield, 11000458

Rutherford County

Searcy—Matthews—Tarpley Farm, (Historic Family Farms in Middle Tennessee MPS) 455 W. Jefferson Pike, Walter Hill, 11000459

Shelby County

Memphis Landing, E. side of Wolf R. Harbor between Court and Beale Sts., Memphis, 11000460

WISCONSIN

Dane County

Frey School, 8847 Co. Rd. Y, Roxbury, 11000461

Milwaukee County

Kinnickinnic River Parkway, (Milwaukee County Parkway System) Between S. 72nd & S. 16th Sts., Milwaukee, 11000462

A request for REMOVAL has been made for the following resources:

INDIANA

Wells County

Grove, John A., House, 521 W. Market St., Bluffton, 83000045

LOUISIANA

Orleans Parish

New Canal Lighthouse, West End Blvd. & Lakeshore Dr., New Orleans, 85003186

NEBRASKA

Douglas County

South Omaha Bridge, US 275/NE 92 over the Missouri R., Omaha, 92000742

Hamilton County

Hearn, Kathleen, Building, 10th & O Sts., Aurora, 84002480

Royal Highlanders Building, 1235 M St., Aurora, 85002144

Kimball County

Stone Building, 126 S. Chestnut St., Kimball, 83001097

[FR Doc. 2011–15767 Filed 6–23–11; 8:45 am]

BILLING CODE 4312–51–P

DEPARTMENT OF JUSTICE

[OMB Number 1122–0018]

Agency Information Collection Activities; Extension of Currently Approved Collection; Comments Requested; Semi-Annual Progress Report for the Grants to Indian Tribal Governments Program

ACTION: 30-Day Notice of Information Collection Under Review.

The Department of Justice, Office on Violence Against Women (OVW), will be submitting the following information collection request to the Office of Management and Budget (OMB) for review and approval in accordance with the Paperwork Reduction Act of 1995. The proposed information collection is published to obtain comments from the public and affected agencies. This proposed information collection was previously published in the **Federal Register** Volume 72, page 39447–01 on June 18, 2007, allowing for a 60-day comment period.

The purpose of this notice is to allow for an additional 30 days for public comment until July 25, 2011. This process is conducted in accordance with 5 CFR 1320.10.

Written comments concerning this information collection should be sent to the Office of Information and Regulatory Affairs, Office of Management and Budget, *Attn:* DOJ Desk Officer. The best way to ensure your comments are received is to e-mail them to *oira_submission@omb.eop.gov* or fax them to 202–395–7285. All comments should reference the 8-digit OMB number for the collection or the title of the collection. If you have questions concerning the collection, please call Cathy Poston at 202–514–5430 or the DOJ Desk Officer at 202–395–3176.

Written comments and suggestions from the public and affected agencies concerning the proposed collection of information are encouraged. Your comments should address one or more of the following four points:

(1) Evaluate whether the proposed collection of information is necessary for the proper performance of the functions of the agency, including whether the information will have practical utility;

(2) Evaluate the accuracy of the agency's estimate of the burden of the proposed collection of information, including the validity of the methodology and assumptions used;

(3) Enhance the quality, utility, and clarity of the information to be collected; and

(4) Minimize the burden of the collection of information on those who are to respond, including through the use of appropriate automated, electronic, mechanical, or other technological collection techniques or other forms of information technology, *e.g.,* permitting electronic submission of responses.

Overview of This Information Collection

(1) *Type of Information Collection:* Extension of Currently Approved Collection.

(2) *Title of the Form/Collection:* Semi-Annual Progress Report for Grants to Indian Tribal Governments Program.

(3) *Agency form number, if any, and the applicable component of the Department of Justice sponsoring the collection:* Form Number: 1122–0018. U.S. Department of Justice, Office on Violence Against Women.

(4) *Affected public who will be asked or required to respond, as well as a brief abstract:* The affected public includes the approximately 85 grantees of the Grants to Indian Tribal Governments Program (Tribal Governments Program), a grant program authorized by the Violence Against Women Act of 2005. This discretionary grant program is designed to enhance the ability of tribes to respond to violent crimes against Indian women, enhance victim safety, and develop education and prevention strategies. Eligible applicants are recognized Indian tribal governments or their authorized designees.

(5) *An estimate of the total number of respondents and the amount of time estimated for an average respondent to respond/reply:* It is estimated that it will take the approximately 85 respondents (Tribal Governments Program grantees) approximately one hour to complete a semi-annual progress report. The semi-annual progress report is divided into sections that pertain to the different types of activities in which grantees may engage. A Tribal Governments Program grantee will only be required to complete the sections of the form that pertain to its own specific activities.

(6) An estimate of the total public burden (in hours) associated with the collection: The total annual hour burden to complete the data collection forms is 170 hours, that is 85 grantees completing a form twice a year with an estimated completion time for the form being one hour.

If additional information is required contact: Jerri Murray, Department Clearance Officer, United States Department of Justice, Justice Management Division, Policy and Planning Staff, Two Constitution Square, 145 N Street, NE., Room 2E–508, Washington, DC 20530.

Jerri Murray,

Department Clearance Officer, United States Department of Justice.

[FR Doc. 2011–15796 Filed 6–23–11; 8:45 am]

BILLING CODE 4410–FX–P

DEPARTMENT OF JUSTICE

Notice of Lodging of Consent Decree Under the Comprehensive Environmental Response, Compensation and Liability Act

Notice is hereby given that on June 13, 2011, a proposed Consent Decree in *United States* v. *Tecumseh Products Company, et al.,* No. 1:03–cv–00401 (E.D. Wisc.) was lodged with the United States District Court for the Eastern District of Wisconsin.

In this action, the United States seeks the implementation of response actions at, and the reimbursement, pursuant to the Comprehensive Environmental Response, Compensation and Liability Act (''CERCLA''), 42 U.S.C. 9601 *et seq.,* of costs incurred by the United States in responding to a release or threat of release of hazardous substances in, the Lower River portion of the Sheboygan River and Harbor Superfund Site in Sheboygan County, Wisconsin (''Site''). In the Amended Complaint filed in this matter, the United States alleges that Tecumseh Products Company (''Tecumseh'') was an ''owner or operator'' of the Site at the time of the disposal of hazardous substances in the Lower River portion of the Site and therefore, pursuant to CERCLA Section 107(a)(2), 42 U.S.C. 9607(a)(2), is liable for the reimbursement of response costs and for the performance of response actions under CERCLA. In the Amended Complaint, the United States further alleges that co-Defendants Pollution Risk Services LLC, and Palace Associates, LLC, are liable, under CERCLA Section 107(a)(1), 42 U.S.C. 9607(a)(1), as present owners of a portion of the Site.

This is the third settlement agreement in this matter. On May 12, 2004, the United States District Court for the Eastern District of Wisconsin approved and entered a Consent Decree (''2004 Decree'') that required Tecumseh to: (1) Implement those components of the remedy for the Upper River portion of the Site that were set forth in a May 12, 2004 Record of Decision issued by the U.S. Environmental Protection Agency (''U.S. EPA''); (2) pay $2.1 million towards the United States= past site past response costs; and (3) reimburse U.S. EPA all future Upper River response costs incurred by the United States. The $2.1 million in past costs has been paid, and all future Upper River response costs billed to Tecumseh to date have also been paid.

Under a 2006 Amendment to the 2004 Decree, a third party, Pollution Risk Services LLC (''PRS''), became party to the Amended Consent Decree and assumed lead responsibility for completing the cleanup of the Upper River Section of the Site. Tecumseh, however, remains liable for completion of the Upper River remedy should PRS fail to perform.

In 2006, PRS purchased the former Tecumseh plant in Sheboygan Falls, Wisconsin, which was a source of hazardous substances that were released to the Site. Subsequently, Palace Associates II, LLC, (''Palace''), an affiliate of PRS, purchased the remainder of the Tecumseh plant site.

Under the current proposed Consent Decree, Tecumseh, PRS, and Palace commit to finance and perform the remedy for the remainder of the Site, i.e., the Lower River, Middle River, and Inner Harbor portions of the Site, which is expected to cost about $12.6 million, and pay U.S. EPA's cost of overseeing the remedial action. As in the case of the 2006 Consent Decree Amendment, the party expected to undertake the work is PRS. Also as in the case of the 2006 Consent Decree Amendment, Tecumseh would be fully obligated to complete the work in the event PRS defaults on its obligations under the proposed Consent Decree.

The Department of Justice will receive, for a period of thirty (30) days from the date of this publication, comments relating to the Consent Decree. Comments should be addressed to the Assistant Attorney General, Environment and Natural Resources Division, and either e-mailed to *pubcomment-ees.enrd@usdoj.gov* or mailed to P.O. Box 7611, U.S. Department of Justice, Washington, DC 20044–7611, and should refer to *United States* v. *Tecumseh Products Company,* DOJ Ref. # 90–11–2–06440/2. The proposed Consent Decree may be examined at U.S. EPA Region 5, 77 West Jackson Boulevard, Chicago, IL 60604. (contact Richard Nagle, 312–353–8222).

During the public comment period, the Consent Decree may also be examined on the following Department of Justice Web site: *http://www.usdoj.gov/enrd/Consent_Decrees.html.* A copy of the Consent Decree may also be obtained by mail from the Consent Decree Library, P.O. Box 7611, U.S. Department of Justice, Washington, DC 20044–7611 or by faxing or e-mailing a request to Tonia Fleetwood (*tonia.fleetwood@usdoj.gov*), fax no. (202) 514–0097, phone confirmation number (202) 514–1547. In requesting a copy, please refer to the referenced case and enclose a check in the amount of $25.00 (25 cents per page reproduction costs) (Consent Decree only) or $83.00 (Consent Decree and all appendices), payable to the U.S. Treasury.

Maureen Katz,

Assistant Chief, Environmental Enforcement Section, Environment and Natural Resources Division.

[FR Doc. 2011–15870 Filed 6–23–11; 8:45 am]

BILLING CODE 4410–15–P

DEPARTMENT OF JUSTICE

Notice of Lodging Proposed Consent Decree

In accordance with Departmental Policy, 28 CFR 50.7, notice is hereby given that a proposed Consent Decree in *United States* v. *Eddie's Service Station, et al.,* No. 5:10-cv-6126, was lodged with the United States District Court for the Western District of Missouri on June 20, 2011.

This proposed Consent Decree concerns a complaint filed by the United States against Eddie's Service Station, Inc., and Gerald Oswald pursuant to 33 U.S.C. 1311(a), to obtain injunctive relief from and impose civil penalties against the Defendants for violating the Clean Water Act by discharging pollutants without a permit into waters of the United States. The proposed Consent Decree resolves these allegations by requiring the Defendants to pay a civil penalty, conduct a mitigation project, and enter into several environmental covenants on the affected property. The Department of Justice will accept written comments relating to this proposed Consent Decree for thirty (30) days from the date of publication of this Notice. Please address comments to David Gunter, Appellate Section, United States Department of Justice, P.O. Box 23795, Washington, DC 20026 and refer to *United States* v. *Eddie's Service Station,* DJ #90–5–1–1–17849.

The proposed Consent Decree may be examined at the Clerk's Office, United States District Court for the Western District of Missouri, 400 East 9th Street, Kansas City, Missouri 64106. In addition, the proposed Consent Decree may be viewed at *http://www.usdoj.gov/enrd/Consent_Decrees.html.*

Maureen M. Katz,

Assistant Section Chief, Environment & Natural Resources Division.

[FR Doc. 2011–15869 Filed 6–23–11; 8:45 am]

BILLING CODE P

DEPARTMENT OF LABOR

Employment and Training Administration

[TA–W–75,232]

The Travelers Indemnity Company, A Wholly-Owned Subsidiary of the Travelers Companies, Inc., Personal Insurance Division, Customer Sales and Service Business Unit, Account Processing Unit, Including Teleworkers Located Throughout the United States Reporting to Knoxville, TN; Amended Certification Regarding Eligibility To Apply for Worker Adjustment Assistance

In accordance with Section 223 of the Trade Act of 1974, as amended (''Act''), 19 U.S.C. 2273, the Department of Labor issued a Certification of Eligibility to Apply for Worker Adjustment Assistance on March 25, 2011, applicable to workers of The Travelers Indemnity Company, a wholly-owned subsidiary of The Travelers Companies, Inc., Personal Insurance Division, Customer Sales and Service Business Unit, Account Processing Unit, Knoxville, Tennessee (subject firm). The workers provide account processing services. The notice was published in the **Federal Register** on April 11, 2011 (76 FR 20047).

At the request of the State of Tennessee workforce agency, the Department reviewed the certification for workers of the subject firm.

New information shows that worker separations have occurred involving employees of the subject firm who telework from off-site locations throughout the United States. These employees provided various activities related to the supply of account processing services.

Based on these findings, the Department is amending this certification to include employees of the subject firm who telework and report to the Knoxville, Tennessee facility.

The intent of the Department's certification is to include all workers of the subject firm who were adversely affected by a shift in account processing services to India.

The amended notice applicable to TA–W–75,232 is hereby issued as follows:

All workers of The Travelers Indemnity Company, a wholly-owned subsidiary of The Travelers Companies, Inc., Personal Insurance Division, Customer Sales and Service Business Unit, Account Processing Unit, including teleworkers located throughout the United States reporting to, Knoxville, Tennessee, who became totally or partially separated from employment on or after February 10, 2010 through March 25, 2013, and all workers in the group threatened with total or partial separation from employment on date of certification through two years from the date of certification, are eligible to apply for adjustment assistance under Chapter 2 of Title II of the Trade Act of 1974, as amended.

Signed in Washington, DC, this 6th day of June, 2011.

Del Min Amy Chen,

Certifying Officer, Office of Trade Adjustment Assistance.

[FR Doc. 2011–15849 Filed 6–23–11; 8:45 am]

BILLING CODE 4510–FN–P

DEPARTMENT OF LABOR

Employment and Training Administration

[TA–W–75,033]

Indianapolis Metal Center, a Division of General Motors Company, Including Workers Whose Wages Were Previously Reported Under FEIN 38–0572515, Including On-Site Leased Workers From Aerotek, Comprehensive Logistics Company, Inc., Hewlett Packard, Ideal Setech, LLC, Quaker Chemical Co., Securias Security Services US, Robinson Solutions, Watge Mangement, Inc., American Food and Vending, Key Office Service, Paragon Technologies, Voith Industrial Services, Inc., and VMX International, LLC, Indianapolis, IN; Amended Certification Regarding Eligibility To Apply for Worker Adjustment Assistance

In accordance with Section 223 of the Trade Act of 1974, as amended (''Act''), 19 U.S.C. 2273, the Department of Labor issued a Certification of Eligibility to Apply for Worker Adjustment Assistance on February 18, 2011, applicable to workers of Indianapolis Metal Center, a division of General Motors Company, including workers whose wages were previously reported under FEIN 38–0572515, including on-site leased workers from Aerotek, Comprehensive Logistics Company, Inc., Hewlett Packard, Ideal Setech, LLC, Quaker Chemical Co., Securitas Security Services US, Robinson Solutions, Waste Management, Inc., American Food and Vending, Key Office Services, and Paragon Technologies, Indianapolis, Indiana. The workers produce automotive stampings. The notice was published in the **Federal Register** on March 10, 2011 (76 FR 13230).

At the request of the State agency, the Department reviewed the certification for workers of the subject firm. The

company reports that workers leased from Voith Industrial Services, Inc., and VMX International, LLC were employed on-site at the Indianapolis, Indiana location of Indianapolis Metal Center, a division of General Motors Company, including workers whose wages were previously reported under FEIN 38–0572515. The Department has determined that these workers were sufficiently under the control of Indianapolis Metal Center, a division of General Motors Company, including workers whose wages were previously reported under FEIN 38–0572515 to be considered leased workers.

Based on these findings, the Department is amending this certification to include workers leased from Voith Industrial Services, Inc., and VMX International, LLC working on-site at the Indianapolis, Indiana location of Indianapolis Metal Center, a division of General Motors Company, including workers whose wages were previously reported under FEIN 38–0572515.

The amended notice applicable to TA–W–75,033 is hereby issued as follows:

All workers of Indianapolis Metal Center, a division of General Motors Company, including workers whose wages were previously reported under FEIN 38–0572515, including on-site leased workers from Aerotek, Comprehensive Logistics Company, Inc., Hewlett Packard, Ideal Setech, LLC, Quaker Chemical Co., Securitas Security Services US, Robinson Solutions, Waste Management, Inc., American Food and Vending, Key Office Services, Paragon Technologies, Voith Industrial Services, Inc., and VMX International, LLC, Indianapolis, Indiana, who became totally or partially separated from employment on or after December 20, 2009, through February 18, 2013, and all workers in the group threatened with total or partial separation from employment on the date of certification through two years from the date of certification, are eligible to apply for adjustment assistance under Chapter 2 of Title II of the Trade Act of 1974, as amended.

Signed at Washington, DC, this 15th day of June 2011.

Michael W. Jaffe,

Certifying Officer, Office of Trade Adjustment Assistance.

[FR Doc. 2011–15848 Filed 6–23–11; 8:45 am]

BILLING CODE 4510–FN–P

DEPARTMENT OF LABOR

Employment and Training Administration

[TA–W–80,092]

Covidien, Formerly Aspect Medical, R & MS Division, Including On-Site Leased Workers From Kelly Services and Total Technical Services, Norwood, MA; Amended Certification Regarding Eligibility To Apply for Worker Adjustment Assistance and Alternative Trade Adjustment Assistance

In accordance with Section 223 of the Trade Act of 1974 (19 U.S.C. 2273), and Section 246 of the Trade Act of 1974 (26 U.S.C. 2813), as amended, the Department of Labor issued a Certification of Eligibility to Apply for Worker Adjustment Assistance and Alternative Trade Adjustment Assistance on May 20, 2011, applicable to workers of Covidien, formerly Aspect Medical, R & MS Division, including on-site leased workers from Kelly Services, Norwood, Massachusetts. The workers are engaged in activities related to the production of medical sensors and monitors. The notice will be published soon in the **Federal Register**.

At the request of the State agency, the Department reviewed the certification for workers of the subject firm. New information shows that workers leased from Total Technical Services were employed on-site at the Norwood, Massachusetts location of Covidien, formerly Aspect Medical, R & MS Division.

The Department has determined that these workers were sufficiently under the control of Covidien, formerly Aspect Medical, R & MS Division to be considered leased workers.

The intent of the Department's certification is to include all workers of the subject firm adversely affected by the shift in production of medical sensors and monitors to Singapore.

Based on these findings, the Department is amending this certification to include workers leased from Total Technical Services working on-site at the Norwood, Massachusetts location of the subject firm.

The amended notice applicable to TA–W–80,092 is hereby issued as follows:

All workers of Covidien, formerly Aspect Medical, R & MS Division, including on-site leased workers from Kelly Services and Total Technical Services, Norwood, Massachusetts, who became totally or partially separated from employment on or after April 4, 2010, through May 20, 2013, are eligible to apply for adjustment assistance under Section 223 of the Trade Act of 1974, and are also eligible to apply for alternative trade adjustment assistance under Section 246 of the Trade Act of 1974.

Signed at Washington, DC, this 15th day of June 2011.

Michael W. Jaffe,

Certifying Officer, Office of Trade Adjustment Assistance.

[FR Doc. 2011–15844 Filed 6–23–11; 8:45 am]

BILLING CODE 4510–FN–P

DEPARTMENT OF LABOR

Employment and Training Administration

Notice of Determinations Regarding Eligibility To Apply for Worker Adjustment Assistance and Alternative Trade Adjustment Assistance

In accordance with Section 223 of the Trade Act of 1974, as amended (19 U.S.C. 2273) the Department of Labor herein presents summaries of determinations regarding eligibility to apply for trade adjustment assistance for workers (TA–W) number and alternative trade adjustment assistance (ATAA) by (TA–W) number issued during the period of *June 6, 2011 through June 10, 2011.*

In order for an affirmative determination to be made for workers of a primary firm and a certification issued regarding eligibility to apply for worker adjustment assistance, each of the group eligibility requirements of Section 222(a) of the Act must be met.

I. Section (a)(2)(A) all of the following must be satisfied:

A. A significant number or proportion of the workers in such workers' firm, or an appropriate subdivision of the firm, have become totally or partially separated, or are threatened to become totally or partially separated;

B. The sales or production, or both, of such firm or subdivision have decreased absolutely; and

C. Increased imports of articles like or directly competitive with articles produced by such firm or subdivision have contributed importantly to such workers' separation or threat of separation and to the decline in sales or production of such firm or subdivision; or

II. Section (a)(2)(B) both of the following must be satisfied:

A. A significant number or proportion of the workers in such workers' firm, or an appropriate subdivision of the firm, have become totally or partially separated, or are threatened to become totally or partially separated;

B. There has been a shift in production by such workers' firm or

subdivision to a foreign country of articles like or directly competitive with articles which are produced by such firm or subdivision; and

C. One of the following must be satisfied:

1. The country to which the workers' firm has shifted production of the articles is a party to a free trade agreement with the United States;

2. The country to which the workers' firm has shifted production of the articles to a beneficiary country under the Andean Trade Preference Act, African Growth and Opportunity Act, or the Caribbean Basin Economic Recovery Act; or

3. There has been or is likely to be an increase in imports of articles that are like or directly competitive with articles which are or were produced by such firm or subdivision.

Also, in order for an affirmative determination to be made for secondarily affected workers of a firm and a certification issued regarding eligibility to apply for worker adjustment assistance, each of the group eligibility requirements of Section 222(b) of the Act must be met.

(1) Significant number or proportion of the workers in the workers' firm or an appropriate subdivision of the firm have become totally or partially separated, or are threatened to become totally or partially separated;

(2) The workers' firm (or subdivision) is a supplier or downstream producer to a firm (or subdivision) that employed a group of workers who received a certification of eligibility to apply for trade adjustment assistance benefits and such supply or production is related to the article that was the basis for such certification; and

(3) Either—

(A) The workers' firm is a supplier and the component parts it supplied for the firm (or subdivision) described in paragraph (2) accounted for at least 20 percent of the production or sales of the workers' firm; or

(B) A loss or business by the workers' firm with the firm (or subdivision) described in paragraph (2) contributed importantly to the workers' separation or threat of separation.

In order for the Division of Trade Adjustment Assistance to issue a certification of eligibility to apply for Alternative Trade Adjustment Assistance (ATAA) for older workers, the group eligibility requirements of Section 246(a)(3)(A)(ii) of the Trade Act must be met.

1. Whether a significant number of workers in the workers' firm are 50 years of age or older.

2. Whether the workers in the workers' firm possess skills that are not easily transferable.

3. The competitive conditions within the workers' industry (*i.e.,* conditions within the industry are adverse).

Affirmative Determinations for Worker Adjustment Assistance

The following certifications have been issued. The date following the company name and location of each determination references the impact date for all workers of such determination.

The following certifications have been issued. The requirements of Section 222(a)(2)(A) (increased imports) of the Trade Act have been met.

None

The following certifications have been issued. The requirements of Section 222(a)(2)(B) (shift in production) of the Trade Act have been met.

None

The following certifications have been issued. The requirements of Section 222(b) (supplier to a firm whose workers are certified eligible to apply for TAA) of the Trade Act have been met.

None

The following certifications have been issued. The requirements of Section 222(b) (downstream producer for a firm whose workers are certified eligible to apply for TAA based on increased imports from or a shift in production to Mexico or Canada) of the Trade Act have been met.

None

Affirmative Determinations for Worker Adjustment Assistance and Alternative Trade Adjustment Assistance

The following certifications have been issued. The date following the company name and location of each determination references the impact date for all workers of such determination.

The following certifications have been issued. The requirements of Section 222(a)(2)(A) (increased imports) and Section 246(a)(3)(A)(ii) of the Trade Act have been met.

TA–W–80,010; The Durham Manufacturing Company, Including On-Site Leased Workers from Hamilton Connections and Westaff, Durham, CT: March 21, 2010

TA–W–80,080; ViaTech Publishing Solutions, Including On-Site Leased Workers from Express Temp, Kalama, WA: March 28, 2010

TA–W–80,088; Holcim (US), Inc., Catskill Plant, Holcim LTD, On-Site Leased Workers of Manpower, Catskill, NY: April 4, 2010

TA–W–80,109; Coupled Products, LLC, A Division of S & G Industries, Columbia City, IN: October 28, 2010

TA–W–80,138; Southwire Company, Long Beach, CA: April 27, 2010

TA–W–80,194; Kingston, Fountain Valley, CA: May 23, 2010

TA–W–80,100; Dimensions Crafts, LLC, Cloverdale, CA: April 11, 2010

TA–W–80,104; Sullivan Carson, York, SC: April 12, 2010

TA–W–80,111; International Game Technology, Reno, NV: April 12, 2010

TA–W–80,111A; International Game Technology, Las Vegas, NV: April 12, 2010

The following certification has been issued. The requirements of Section 222(a)(2)(B) (shift in production) and Section 246(a)(3)(A)(ii) of the Trade Act have been met.

TA–W–80,092; Covidien, formerly Aspect Medical, R & MS Div., Norwood, MS: April 4, 2010.

TA–W–80,187; Bendonfield Management Services, Voorhees, NJ: April 14, 2010

Negative Determinations for Worker Adjustment Assistance and Alternative Trade Adjustment Assistance

In the following cases, the investigation revealed that the eligibility criteria for worker adjustment assistance have not been met for the reasons specified.

Because the workers of the firm are not eligible to apply for TAA, the workers cannot be certified eligible for ATAA.

The investigation revealed that criteria (a)(2)(A)(I.B.) (Sales or production, or both, did not decline) and (a)(2)(B)(II.B.) (shift in production to a foreign country) have not been met.

None

The investigation revealed that criteria (a)(2)(A)(I.C.) (increased imports) and (a)(2)(B)(II.B.) (shift in production to a foreign country) have not been met.

TA–W–80,006; Mitel (Delaware), Inc., Chandler, AZ

TA–W–80,071; PCS Administration (USA), Inc., Northbrook, IL

TA–W–80,089; Parkdale America, LLC, Galax, VA

The workers' firm does not produce an article as required for certification under Section 222 of the Trade Act of 1974.

TA–W–80,017; Project Resources Group, Inc., La Junta, CO

TA–W–80,073; Ikano Communications, Inc., Salt Lake City, UT

Determinations Terminating Investigations of Petitions for Worker Adjustment Assistance

After notice of the petitions was published in the **Federal Register** and on the Department's Web site, as required by Section 221 of the Act (19 U.S.C. 2271), the Department initiated investigations of these petitions.

The following determinations terminating investigations were issued because the petitioning group of workers are covered by active certifications. Consequently, further investigation in these cases would service no purpose since the petitioning group of workers cannot be covered by more than one certification at a time.

TA–W–80,108; Hartford Financial Services, Simsbury, CT

TA–W–80,186; Colville Tribal Construction, Nespelem, WA

I hereby certify that the aforementioned determinations were issued during the period of *June 6, 2011 through June 10, 2011.* Copies of these determinations may be requested under the Freedom of Information Act. Request may be submitted by fax, courier services, or mail to FOIA Disclosure Officer, Office of Trade Adjustment Assistance (ETA), U.S. Department of Labor, 200 Constitution Avenue, NW., Washington, DC 20210 or *tofoiarequest@dol.gov.* These determinations also are available on the Department's Web site at *http://www.doleta.gov/tradeact* under the searchable listing of determinations.

Dated: June 16, 2011.

Michael W. Jaffe,

Certifying Officer, Office of Trade Adjustment Assistance.

[FR Doc. 2011–15847 Filed 6–23–11; 8:45 am]

BILLING CODE 4510–FN–P

DEPARTMENT OF LABOR

Employment and Training Administration

Notice of Determinations Regarding Eligibility To Apply for Worker Adjustment Assistance

In accordance with Section 223 of the Trade Act of 1974, as amended (19 U.S.C. 2273) the Department of Labor herein presents summaries of determinations regarding eligibility to apply for trade adjustment assistance for workers by (TA–W) number issued during the period of *June 6, 2011 through June 10, 2011.*

In order for an affirmative determination to be made for workers of a primary firm and a certification issued regarding eligibility to apply for worker adjustment assistance, each of the group eligibility requirements of Section 222(a) of the Act must be met.

I. Under Section 222(a)(2)(A), the following must be satisfied:

(1) A significant number or proportion of the workers in such workers' firm have become totally or partially separated, or are threatened to become totally or partially separated;

(2) The sales or production, or both, of such firm have decreased absolutely; and

(3) One of the following must be satisfied:

(A) Imports of articles or services like or directly competitive with articles produced or services supplied by such firm have increased;

(B) Imports of articles like or directly competitive with articles into which one or more component parts produced by such firm are directly incorporated, have increased;

(C) Imports of articles directly incorporating one or more component parts produced outside the United States that are like or directly competitive with imports of articles incorporating one or more component parts produced by such firm have increased;

(D) Imports of articles like or directly competitive with articles which are produced directly using services supplied by such firm, have increased; and

(4) The increase in imports contributed importantly to such workers' separation or threat of separation and to the decline in the sales or production of such firm; or

II. Section 222(a)(2)(B) all of the following must be satisfied:

(1) A significant number or proportion of the workers in such workers' firm have become totally or partially separated, or are threatened to become totally or partially separated;

(2) One of the following must be satisfied:

(A) There has been a shift by the workers' firm to a foreign country in the production of articles or supply of services like or directly competitive with those produced/supplied by the workers' firm;

(B) There has been an acquisition from a foreign country by the workers' firm of articles/services that are like or directly competitive with those produced/supplied by the workers' firm; and

(3) The shift/acquisition contributed importantly to the workers' separation or threat of separation.

In order for an affirmative determination to be made for adversely affected workers in public agencies and a certification issued regarding eligibility to apply for worker adjustment assistance, each of the group eligibility requirements of Section 222(b) of the Act must be met.

(1) A significant number or proportion of the workers in the public agency have become totally or partially separated, or are threatened to become totally or partially separated;

(2) The public agency has acquired from a foreign country services like or directly competitive with services which are supplied by such agency; and

(3) The acquisition of services contributed importantly to such workers' separation or threat of separation.

In order for an affirmative determination to be made for adversely affected secondary workers of a firm and a certification issued regarding eligibility to apply for worker adjustment assistance, each of the group eligibility requirements of Section 222(c) of the Act must be met.

(1) A significant number or proportion of the workers in the workers' firm have become totally or partially separated, or are threatened to become totally or partially separated;

(2) The workers' firm is a Supplier or Downstream Producer to a firm that employed a group of workers who received a certification of eligibility under Section 222(a) of the Act, and such supply or production is related to the article or service that was the basis for such certification; and

(3) Either—

(A) The workers' firm is a supplier and the component parts it supplied to the firm described in paragraph (2) accounted for at least 20 percent of the production or sales of the workers' firm; or

(B) A loss of business by the workers' firm with the firm described in paragraph (2) contributed importantly to the workers' separation or threat of separation.

In order for an affirmative determination to be made for adversely affected workers in firms identified by the International Trade Commission and a certification issued regarding eligibility to apply for worker adjustment assistance, each of the group eligibility requirements of Section 222(f) of the Act must be met.

(1) The workers' firm is publicly identified by name by the International Trade Commission as a member of a domestic industry in an investigation resulting in—

(A) An affirmative determination of serious injury or threat thereof under section 202(b)(1);

(B) An affirmative determination of market disruption or threat thereof under section 421(b)(1); or

(C) An affirmative final determination of material injury or threat thereof under section 705(b)(1)(A) or 735(b)(1)(A) of the Tariff Act of 1930 (19 U.S.C. 1671d(b)(1)(A) and 1673d(b)(1)(A));

(2) The petition is filed during the 1-year period beginning on the date on which—

(A) A summary of the report submitted to the President by the International Trade Commission under section 202(f)(1) with respect to the affirmative determination described in paragraph (1)(A) is published in the **Federal Register** under section 202(f)(3); or

(B) Notice of an affirmative determination described in subparagraph (1) is published in the **Federal Register**; and

(3) The workers have become totally or partially separated from the workers' firm within—

(A) The 1-year period described in paragraph (2); or

(B) Notwithstanding section 223(b)(1), the 1-year period preceding the 1-year period described in paragraph (2).

Affirmative Determinations for Worker Adjustment Assistance

The following certifications have been issued. The date following the company name and location of each determination references the impact date for all workers of such determination.

The following certifications have been issued. The requirements of Section 222(a)(2)(A) (increased imports) of the Trade Act have been met.

None

Negative Determinations for Worker Adjustment Assistance

In the following cases, the investigation revealed that the eligibility criteria for worker adjustment assistance have not been met for the reasons specified.

The investigation revealed that the criteria under paragraphs (a)(2)(A)(i) (decline in sales or production, or both) and (a)(2)(B) (shift in production or services to a foreign country) of section 222 have not been met.

The investigation revealed that the criteria under paragraphs (a)(2)(A) (increased imports) and (a)(2)(B) (shift in production or services to a foreign country) of section 222 have not been met.

TA–W number	Subject firm	Location	Impact date
75,283	Hewlett Packard Company, Enterprise Services Division; Global Information Security-Identity, etc.	San Diego, CA	
75,283A	Hewlett Packard Company, Enterprise Services Division; Global Information Security-Identity, etc.	Colorado Springs, CO	
75,283B	Hewlett Packard Company, Enterprise Services Division; Global Information Security-Identity, etc.	Kokomo, IN	
75,283C	Hewlett Packard Company, Enterprise Services Division; Global Information Security-Identity, etc.	Lansing and Pontiac, MI	
75,283D	Hewlett Packard Company, Enterprise Services Division; Global Information Security-Identity, etc.	Plano, TX	
75,283E	Hewlett Packard Company, Enterprise Services Division; Global Information Security-Identity, etc.	Teleworkers Across the United States, 00.	
75,314	JPMorgan Chase and Company, EMC Mortgage LLC, formally EMC Mortgage Corporation.	Lewisville, TX	

I hereby certify that the aforementioned determinations were issued during the period of *June 6, 2011 through June 10, 2011.* Copies of these determinations may be requested under the Freedom of Information Act. Requests may be submitted by fax, courier services, or mail to FOIA Disclosure Officer, Office of Trade Adjustment Assistance (ETA), U.S. Department of Labor, 200 Constitution Avenue, NW., Washington, DC 20210 or *tofoiarequest@dol.gov.* These determinations also are available on the Department's Web site at *http://www.doleta.gov/tradeact* under the searchable listing of determinations.

Dated: June 16, 2011.

Michael W. Jaffe,

Certifying Officer, Office of Trade Adjustment Assistance.

[FR Doc. 2011–15846 Filed 6–23–11; 8:45 am]

BILLING CODE 4510–FN–P

DEPARTMENT OF LABOR

Employment and Training Administration

Investigations Regarding Certifications of Eligibility To Apply for Worker Adjustment Assistance and Alternative Trade Adjustment Assistance

Petitions have been filed with the Secretary of Labor under Section 221 (a) of the Trade Act of 1974 (''the Act'') and are identified in the Appendix to this notice. Upon receipt of these petitions, the Director of the Office of Trade Adjustment Assistance, Employment and Training Administration, has instituted investigations pursuant to Section 221 (a) of the Act.

The purpose of each of the investigations is to determine whether the workers are eligible to apply for adjustment assistance under Title II, Chapter 2, of the Act. The investigations will further relate, as appropriate, to the determination of the date on which total or partial separations began or threatened to begin and the subdivision of the firm involved.

The petitioners or any other persons showing a substantial interest in the subject matter of the investigations may request a public hearing, provided such request is filed in writing with the Director, Office of Trade Adjustment Assistance, at the address shown below, not later than July 5, 2011.

Interested persons are invited to submit written comments regarding the subject matter of the investigations to the Director, Office of Trade Adjustment Assistance, at the address shown below, not later than July 5, 2011.

The petitions filed in this case are available for inspection at the Office of the Director, Office of Trade Adjustment Assistance, Employment and Training Administration, U.S. Department of Labor, Room N–5428, 200 Constitution Avenue, NW., Washington, DC 20210.

Signed at Washington, DC, this 16th day of June 2011.

Michael W. Jaffe,

Certifying Officer, Office of Trade Adjustment Assistance.

APPENDIX

[11 TAA petitions instituted between 6/6/11 and 6/10/11]

TA–W	Subject firm (petitioners)	Location	Date of institution	Date of petition
80217	Intelicoat Technologies, LLC (Workers)	Portland, OR	06/06/11	06/03/11
80218	Unimin Corporation (Union)	Hamilton, WA	06/06/11	06/03/11
80219	Beacon Medical Services (Workers)	Aurora, CO	06/07/11	05/16/11
80220	Pelican Importing and Exporting (State/One-Stop)	Houston, TX	06/07/11	06/06/11
80221	International Netherlands Group, ING (State/One-Stop)	Windsor, CT	06/07/11	06/06/11
80222	Saint-Gobain Abrasives (Union)	Watervliet, NY	06/07/11	06/06/11
80223	RockTenn (Company)	Milwaukee, WI	06/08/11	05/27/11
80224	Grays Harbor Paper L.L.C. (Union)	Hoquiam, WA	06/08/11	06/07/11
80225	Finisar Corporation (Workers)	Horsham, PA	06/09/11	06/08/11
80226	Camco Cedar (State/One-Stop)	Tacoma, WA	06/09/11	06/07/11
80227	Bos Automotive Products, Inc (Company)	Morristown, TN	06/10/11	06/09/11

[FR Doc. 2011–15845 Filed 6–23–11; 8:45 am]

BILLING CODE 4510–FN–P

NATIONAL SCIENCE FOUNDATION

Agency Information Collection Activities: Comment Request

AGENCY: National Science Foundation.

ACTION: Submission for OMB Review; Comment Request.

SUMMARY: Under the Paperwork Reduction Act of 1995, Public Law 104–13 (44 U.S.C. 3501 *et seq.*), and as part of its continuing effort to reduce paperwork and respondent burden, the National Science Foundation (NSF) is inviting the general public and other Federal agencies to comment on this proposed continuing information collection. This is the second notice for public comment; the first was published in the **Federal Register** at 76 FR 21073 and no substantial comments were received. NSF is forwarding the proposed submission to the Office of Management and Budget (OMB) for clearance simultaneously with the publication of this second notice. The full submission may be found at: *http://www.reginfo.gov/public/do/PRAMain.*

DATES: Comments regarding these information collections are best assured of having their full effect if received by OMB within 30 days of publication in the **Federal Register**.

ADDRESSES: Written comments regarding (a) Whether the collection of information is necessary for the proper performance of the functions of NSF, including whether the information will have practical utility; (b) the accuracy of NSF's estimate of burden including the validity of the methodology and assumptions used; (c) ways to enhance the quality, utility and clarity of the information to be collected; or (d) ways to minimize the burden of the collection of information on those who are to respond, including through the use of appropriate automated, electronic, mechanical, or other technological collection techniques or other forms of information technology should be addressed to: Office of Information and Regulatory Affairs of OMB, Attention: Desk Officer for National Science Foundation, 725–17th Street, NW., Room 10235, Washington, DC 20503, and to Suzanne H. Plimpton, Reports Clearance Officer, National Science Foundation, 4201 Wilson Boulevard, Suite 295, Arlington, Virginia 22230 or send e-mail to *splimpto@nsf.gov.* Copies of the submission may be obtained by calling (703) 292–7556.

FOR FURTHER INFORMATION CONTACT: Suzanne H. Plimpton, NSF Reports Clearance Officer at (703) 292–7556 or send e-mail to *splimpto@nsf.gov.*

An agency may not conduct or sponsor a collection of information unless the collection of information displays a currently valid OMB control number and the agency informs potential persons who are to respond to the collection of information that such persons are not required to respond to the collection of information unless it displays a currently valid OMB control number.

SUPPLEMENTARY INFORMATION:

Title of Collection: National Science Foundation Science Honorary Awards.

OMB Control No.: 3145–0035.

Abstract: The National Science Foundation (NSF) administers several honorary awards, among them the President's National Medal of Science, the Alan T. Waterman Award, the National Science Board (NSB) Vannevar Bush Award, the NSB Public Service Award, and the Presidential Awards for Excellence in Science, Mathematics and Engineering Mentoring (PAESMEM) program.

In 2003, to comply with E-government requirements, the nomination processes were converted to electronic submission through the National Science Foundation's (NSF) FastLane system. Individuals can now prepare nominations and references through *http://www.fastlane.nsf.gov/honawards/.* First-time users must register on the Fastlane Web site using the link found in the upper right-hand corner above the ''Log In'' box before accessing any of the honorary award categories.

Use of the Information: The Foundation has the following honorary award programs:

• *President's National Medal of Science.* Statutory authority for the President's National Medal of Science is contained in 42 U.S.C. 1881 (Pub. L. 86–209), which established the award and stated that ''(t)he President shall * * * award the Medal on the recommendations received from the National Academy of Sciences or on the basis of such other information and evidence as * * * appropriate.''

Subsequently, Executive Order 10961 specified procedures for the Award by establishing a National Medal of Science Committee which would ''receive recommendations made by any other nationally representative scientific or engineering organization.'' On the basis of these recommendations, the Committee was directed to select its candidates and to forward its recommendations to the President.

In 1962, to comply with these directives, the Committee initiated a solicitation form letter to invite these nominations. In 1979, the Committee initiated a nomination form as an attachment to the solicitation letter. A slightly modified version of the nomination form was used in 1980.

The Committee established the following guidelines for selection of candidates:

1. Principal criterion: The total impact of an individual's work on the current state of physical, biological, mathematical, engineering or social and behavioral sciences.

2. Achievements of an unusually significant nature in relation to the potential effects on the development of scientific thought.

3. Unusually distinguished service in the general advancement of science and engineering, especially when accompanied by substantial contributions to the content of science. Recognition by peers within the scientific community.

4. Contributions to innovation and industry.

5. Influence on education through publications, teaching activities, outreach, mentoring, etc.

6. Must be a U.S. citizen or permanent resident who has applied for citizenship.

In 2003, the Committee changed the active period of eligibility to three years, including the year of nomination. After that time, candidates must be renominated with a new nomination package for them to be considered by the Committee.

Narratives are now restricted to two pages of text, as stipulated in the guidelines at *http://www.fastlane.nsf.gov/honawards/nms.*

• *Alan T. Waterman Award.* Congress established the Alan T. Waterman Award in August 1975 (42 U.S.C. 1881a (Pub. L. 94–86) and authorized NSF to ''establish the Alan T. Waterman Award for research or advanced study in any of the sciences or engineering'' to mark the 25th anniversary of the National Science Foundation and to honor its first Director. The annual award recognizes an outstanding young researcher in any field of science or engineering supported by NSF. In addition to a medal, the awardee receives a grant of $500,000 over a three-year period for scientific research or advanced study in the mathematical, physical, medical, biological, engineering, social, or other sciences at the institution of the recipient's choice.

The Alan T. Waterman Award Committee was established by NSF to comply with the directive contained in Public Law 94–86. The Committee solicits nominations from members of the National Academy of Sciences, National Academy of Engineering, scientific and technical organizations, and any other source, public or private, as appropriate.

In 1976, the Committee initiated a form letter to solicit these nominations. In 1980, a nomination form was used which standardized the nomination procedures, allowed for more effective Committee review, and permitted better staff work in a short period of time. On the basis of its review, the Committee forwards its recommendation to the Director, NSF, and the National Science Board (NSB).

Candidates must be U.S. citizens or permanent residents and must be 35 years of age or younger or not more than seven years beyond receipt of the Ph.D. degree by December 31 of the year in which they are nominated. Candidates should have demonstrated exceptional individual achievements in scientific or engineering research of sufficient quality to place them at the forefront of their peers. Criteria include originality, innovation, and significant impact on the field.

• *Vannevar Bush Award.* The NSB established the Vannevar Bush Award in 1980 to honor Dr. Bush's unique contributions to public service. The award recognizes an individual who, through public service activities in science and technology, has made an outstanding ''contribution toward the welfare of mankind and the Nation.''

The NSB *ad hoc* Vannevar Bush Award Committee annually solicits nominations from selected scientific engineering and educational societies. Candidates must be a senior stateperson who is an American citizen and meets two or more of the following criteria:

1. Distinguished himself/herself through public service activities in science and technology.

2. Pioneered the exploration, charting, and settlement of new frontiers in science, technology, education, and public service.

3. Demonstrated leadership and creativity that have inspired others to distinguished careers in science and technology.

4. Contributed to the welfare of the Nation and mankind through activities in science and technology.

5. Demonstrated leadership and creativity that have helped mold the history of advancements in the Nation's science, technology, and education.

Nominations must include a narrative description about the nominee, a curriculum vitae (without publications), and a brief citation summarizing the nominee's scientific or technological contributions to our national welfare in promotion of the progress of science. Nominations must also include two reference letters, submitted separate from the nomination through *http://www.fastlane.nsf.gov/honawards/.* Nominations remain active for three years, including the year of nomination. After that time, candidates must be renominated with a new nomination for them to be considered by the selection committee.

• *NSB Public Service Award.* The NSB Public Service Award Committee was established in November 1996. This annual award recognizes people and organizations that have increased the public understanding of science or engineering. The award is given to an individual and to a group (company, corporation, or organization), but not to members of the U.S. Government.

Eligibility includes any individual or group (company, corporation, or organization) that has increased the public understanding of science or engineering. Members of the U.S. Government are not eligible for consideration.

Candidates for the individual and group (company, corporation, or organization) award must have made contributions to public service in areas other than research, and should meet one or more of the following criteria:

1. Increased the public's understanding of the processes of science and engineering through scientific discovery, innovation and its communication to the public.

2. Encouraged others to help raise the public understanding of science and technology.

3. Promoted the engagement of scientists and engineers in public outreach and scientific literacy.

4. Contributed to the development of broad science and engineering policy and its support.

5. Influenced and encouraged the next generation of scientist and engineers.

6. Achieved broad recognition outside the nominee's area of specialization.

7. Fostered awareness of science and technology among broad segments of the population.

Nominations must include a summary of the candidate's activities as they relate to the selection criteria; the nominator's name, address and telephone number; the name, address, and telephone number of the nominee; and the candidate's vita, if appropriate (no more than three pages).

The selection committee recommends the most outstanding candidate(s) for each category to the NSB, which approves the awardees.

Nominations remain active for a period of three years, including the year of nomination. After that time, candidates must be renominated with a new nomination for them to be considered by the selection committee.

• *Presidential Awards for Excellence in Science, Mathematics and Engineering Mentoring (PAESMEM) program.*

In 1996, the White House, through the National Science and Technology Council (NSTC) and the Office of Science and Technology Policy (OSTP), established the Presidential Awards for Excellence in Science, Mathematics and Engineering Mentoring (PAESMEM) program. The program, administered on behalf of the White House by the National Science Foundation, seeks to identify outstanding mentoring efforts or programs designed to enhance the participation of groups (women, minorities and persons with disabilities) underrepresented in science, mathematics and engineering. The awardees will serve as exemplars to their colleagues and will be leaders in the national effort to more fully develop the Nation's human resources in science, mathematics and engineering.

An honorarium in the amount of $10,000 will accompany the award along with a commemorative Presidential certificate. The award will be made to: (1) An individual who has demonstrated outstanding and sustained mentoring and effective guidance to a significant number of students at the K–12, undergraduate, or graduate education level or (2) to an organization that, through its programming, has enabled a substantial number of students underrepresented in science, mathematics and engineering to successfully pursue and complete the relevant degree programs. It is anticipated that each award will be used to continue the recognized activity. The nominees must have served in such a mentoring role for at least five years.

Estimate of Burden: These are annual award programs with application deadlines varying according to the program. Public burden also may vary according to program; however, across all the programs, it is estimated that each submission will average 19 hours per respondent. If the nominator is thoroughly familiar with the scientific background of the nominee, time spent to complete the nomination may be considerably reduced.

Respondents: Individuals, businesses or other for-profit organizations, universities, non-profit institutions, and Federal and State governments.

Estimated Number of Responses per Award: 207 responses, broken down as follows: For the President's National Medal of Science, 55; for the Alan T. Waterman Award, 60; for the Vannevar Bush Award, 12; for the Public Service Award, 20; and for the PAESMEM, 60.

Estimated Total Annual Burden on Respondents: 3,980 hours, broken down by 1,100 hours for the President's National Medal of Science (20 hours per 55 respondents); 1,200 hours for the Alan T. Waterman Award (20 hours per 60 respondents); 180 hours for the Vannevar Bush Award (15 hours per 12 respondents); 300 hours for the Public Service Award (15 hours per 20 respondents); and 1,200 hours for the PAESMEM (20 hours per 60 respondents).

Frequency of Responses: Annually.

Comments: Comments are invited on (a) Whether the proposed collection of information is necessary for the proper performance of the functions of the Agency, including whether the information shall have practical utility; (b) the accuracy of the Agency's estimate of the burden of the proposed collection of information; (c) ways to enhance the quality, utility, and clarity of the information on respondents, including through the use of automated collection techniques or other forms of information technology; or (d) ways to minimize the burden of the collection of information on those who are to respond, including through the use of appropriate automated, electronic, mechanical, or other technological collection techniques or other forms of information technology.

Dated: June 20, 2011.

Suzanne H. Plimpton,

Reports Clearance Officer, National Science Foundation.

[FR Doc. 2011–15785 Filed 6–23–11; 8:45 am]

BILLING CODE 7555–01–P

NUCLEAR REGULATORY COMMISSION

[NRC–2008–0391]

Notice of Availability of Final Supplemental Environmental Impact Statement for the Lost Creek In-Situ Recovery (ISR) Project in Sweetwater County, WY; Supplement to the Generic Environmental Impact Statement for In-Situ Leach Uranium Milling Facilities

AGENCY: Nuclear Regulatory Commission.

ACTION: Notice of availability.

SUMMARY: Notice is hereby given that the U.S. Nuclear Regulatory Commission (NRC) is issuing a final Supplemental Environmental Impact Statement (SEIS) to the Generic Environmental Impact Statement for *In-Situ* Leach Uranium Milling Facilities (GEIS), (NUREG–1910, Supplement 3) for the Lost Creek *In-Situ* Recovery Project in Sweetwater County, Wyoming. By letter dated October 30, 2007, Lost Creek ISR, LLC (LCI), a wholly-owned subsidiary of UR-Energy USA, Inc. submitted an application to the NRC for a new source and byproduct material license for the Lost Creek ISR Project, which LCI proposed to be located in the Great Divide Basin in Sweetwater County, Wyoming. LCI is proposing to recover uranium from the Lost Creek ISR Project site using the *in-situ* leach (also known as the *in-situ* recovery [ISR]) process. In this final SEIS, the NRC staff assessed the environmental impacts from the construction, operation, aquifer restoration, and decommissioning of the proposed Lost Creek ISR Project.

In addition to the proposed action, the NRC staff assessed two alternatives in the final SEIS: An alternative that would result in dry yellowcake production at the proposed Lost Creek ISR Project and the No-Action Alternative. In addition, the NRC staff evaluated alternative wastewater disposal options to the proposed action of disposing of liquid effluent via Class I disposal wells. Under the No-Action alternative, NRC would deny LCI's request to construct, operate, conduct aquifer restoration, and decommission an ISR facility at Lost Creek. Alternatives that were considered, but were eliminated from detailed analysis, included conventional mining and milling or heap leach processing. However, given the substantial environmental impact from implementing these alternatives, they were not further considered. The NRC staff also evaluated alternate lixiviants. For reasons discussed in the SEIS, this alternative was also eliminated from detailed analysis.

As discussed in Section 2.4 of the final SEIS, unless safety issues mandate otherwise, the NRC staff's recommendation to the Commission related to the environmental aspects of the proposed action is that the source and byproduct material license be issued as requested. This recommendation is based upon: (1) The license application, including the environmental and technical report submitted by LCI and the applicant's supplemental letters and responses to the NRC staff's requests for additional information; (2) consultation with Federal, State, Tribal, and local agencies; (3) the NRC staff's independent review; (4) the NRC staff's consideration of comments received on the draft SEIS; and (5) the assessments summarized in this SEIS.

The final SEIS for the Lost Creek ISR Project may be accessed on the Internet at *http://www.nrc.gov/reading-rm/doc-collections/nuregs/staff/sr1910/s3/*. Additionally, the NRC maintains an Agencywide Documents and Management System (ADAMS), which

provides text and image files of the NRC's public documents. The SEIS may also be accessed online at NRC's Library at: *http://www.nrc.gov/reading-rm/adams.html*. The final ''Environmental Impact Statement for the Lost Creek ISR Project in Sweetwater County, Wyoming—Supplement to the Generic Environmental Impact Statement for *In-Situ* Leach Uranium Milling Facilities'' is available electronically under ADAMS Accession Number ML11125A006. If you do not have access to ADAMS or if there is a problem accessing documents located in ADAMS, contact the NRC Public Document Room (PDR) reference staff at 1–800–397–4209, 301–415–4737, or by e-mail *pdr.resource@nrc.gov*. Information and documents associated with the final SEIS are also available for inspection at the NRC's PDR, NRC's Headquarters Building, Room O1–F21, 11555 Rockville Pike (first floor), Rockville, Maryland 20852–2783. For those without access to the Internet, paper copies of any electronic documents may be obtained for a fee by contacting the NRC's PDR at 1–800–397–4209. The final SEIS and related documents may also be found at the following public libraries:

Sweetwater County Library, 300 North 1st Street East, Green River, Wyoming 82935, 307–875–8615.

Rock Springs Branch Library, 400 C Street, Rock Springs, Wyoming 82901, 307–352–6667.

FOR FURTHER INFORMATION CONTACT: Mr. Alan Bjornsen, Project Manager, Environmental Review Branch-B, Division of Waste Management and Environmental Protection (DWMEP), Office of Federal and State Materials and Environmental Management Programs (FSME), Mail Stop T–8F5, U.S. Nuclear Regulatory Commission, Washington, DC 20555–0001. Telephone: 1 (800) 368–5642, extension 1195; E-mail: *Alan.Bjornsen@nrc.gov*. For general or technical information associated with the safety and licensing of uranium milling facilities, please contact Stephen Cohen, Team Lead, Uranium Recovery Licensing Branch, DWMEP, FSME, Mail Stop T–8F5, U.S. Nuclear Regulatory Commission, Washington, DC 20555–0001. Telephone: 1 (800) 368–5642, extension 7182; E-mail: *Stephen.Cohen@nrc.gov*.

Dated at Rockville, Maryland, this 17th day of June 2011.

For the Nuclear Regulatory Commission.

Andrew Persinko,

Deputy Director, Environmental Protection and Performance Assessment Directorate, Division of Waste Management and Environmental Protection, Office of Federal and State Materials and Environmental Management Programs.

[FR Doc. 2011–15828 Filed 6–23–11; 8:45 am]

BILLING CODE 7590–01–P

POSTAL REGULATORY COMMISSION

Sunshine Act Meetings

TIME AND DATE: Wednesday, July 13, 2011, at 11 a.m.

PLACE: Commission hearing room, 901 New York Avenue, NW., Suite 200, Washington, DC 20268–0001.

STATUS: Part of this meeting will be open to the public. The rest of the meeting will be closed to the public. The open part of the meeting will be audiocast. The audiocast can be accessed via the Commission's Web site at *http://www.prc.gov.*

MATTERS TO BE CONSIDERED: The agenda for the Commission's July 2011 meeting includes the items identified below.

Portions Open to the Public

1. Report on the Joint Periodicals Task Force and the report to the Congress pursuant to section 708 of the Postal Accountability and Enhancement Act (PAEA).
2. Report on legislative review pursuant to section 701 of the PAEA.
3. Report on status of pending dockets.
4. Review of postal-related Congressional activity.
5. Report on international activities.
6. Report on studies to quantify the social value of the postal system.

Portions Closed to the Public

7. Discussion of pending litigation.
8. Discussion of contractual matters involving sensitive business information—lease issues.

CONTACT PERSON FOR MORE INFORMATION: Stephen L. Sharfman, General Counsel, Postal Regulatory Commission, 901 New York Avenue, NW., Suite 200, Washington, DC 20268–0001, at 202–789–6820 (for agenda-related inquiries) and Shoshana M. Grove, Secretary of the Commission, at 202–789–6800 or *shoshana.grove@prc.gov* (for inquiries related to meeting location, access for handicapped or disabled persons, the audiocast, or similar matters).

Dated: May 20, 2011.

By the Commission.

Shoshana M. Grove,

Secretary.

[FR Doc. 2011–15980 Filed 6–22–11; 11:15 am]

BILLING CODE 7710–FW–P

SECURITIES AND EXCHANGE COMMISSION

Submission for OMB Review; Comment Request

Upon Written Request, Copies Available From: U.S. Securities and Exchange Commission, Office of Investor Education and Advocacy, Washington, DC 20549–0213.

Extension:

Rule 19b–4 and Form 19b–4; OMB Control No. 3235–0045; SEC File No. 270–38.

Notice is hereby given that pursuant to the Paperwork Reduction Act of 1995 (44 U.S.C. 3501 *et seq.*), the Securities and Exchange Commission (''Commission'') has submitted to the Office of Management and Budget (''OMB'') a request for approval of extension of the previously approved collection of information provided for in Rule 19b–4 (17 CFR 240.19b–4) under the Securities Exchange Act of 1934 (15 U.S.C. 78a *et seq.*).

Section 19(b) of the Securities Exchange Act of 1934 (''Act'') (15 U.S.C. 78s(b)) requires each self-regulatory organization (''SRO'') to file with the Commission copies of any proposed rule, or any proposed change in, addition to, or deletion from the rules of such SRO. Rule 19b–4 (17 CFR 240.19b–4) implements the requirements of Section 19(b) by requiring the SROs to file their proposed rule changes on Form 19b–4 and by clarifying which actions taken by SROs are deemed proposed rule changes and so must be filed pursuant to Section 19(b).

The collection of information is designed to provide the Commission with the information necessary to determine, as required by the Act, whether the proposed rule change is consistent with the Act and the rules thereunder. The information is used to determine if the proposed rule change should be approved or if proceedings should be instituted to determine whether the proposed rule change should be disapproved.

The respondents to the collection of information are self-regulatory organizations (as defined by the Act), including national securities exchanges, national securities associations, registered clearing agencies and the Municipal Securities Rulemaking Board.

Twenty-five respondents file an average total of 1,405 responses per year. Each response takes approximately 38.057 hours to complete. The total annual reporting burden for filing proposed rule changes is 53,470 hours. The respondents are required to post all proposed rule changes to their Web sites, each of which takes approximately four hours to complete. For 1,405 proposed rule changes, the total annual reporting burden for posting them to respondents' Web sites is 5,620 hours. The respondents are required to update the postings of those proposed rule changes which become effective (on average, 1,071 per year), each of which takes approximately four hours to complete. The total annual reporting burden for updating proposed rule change postings on the respondents' Web sites is 4,284 hours. Thus, the total estimated annual response burden pursuant to Rule 19b–4 and Form 19b–4 is the sum of the total annual reporting burdens for filing proposed rule changes, posting them to the respondents' Web sites, and updating the postings of those that become effective on the respondents, which is 63,374 hours.

Compliance with Rule 19b–4 is mandatory. Information received in response to Rule 19b–4 shall not be kept confidential; the information collected is public information. An agency may not conduct or sponsor, and a person is not required to respond to, a collection of information unless it displays a currently valid control number.

The public may view the background documentation for this information collection at the following Web site, *http://www.reginfo.gov*. Comments should be directed to (i) Desk Officer for the Securities and Exchange Commission, Office of Information and Regulatory Affairs, Office of Management and Budget, Room 10102, New Executive Office Building, Washington, DC 20503, or by sending an e-mail to: *Shagufta_Ahmed@omb.eop.gov;* and (ii) Thomas Bayer, Director/Chief Information Officer, Securities and Exchange Commission, c/o Remi Pavlik-Simon, 6432 General Green Way, Alexandria, VA 22312 or send an e-mail to: *PRA_Mailbox@sec.gov*. Comments must be submitted to OMB within 30 days of this notice.

June 21, 2011.

Cathy H. Ahn,

Deputy Secretary.

[FR Doc. 2011–15806 Filed 6–23–11; 8:45 am]

BILLING CODE 8011–01–P

SECURITIES AND EXCHANGE COMMISSION

[Release No. 34–64712; File No. SR–OCC–2011–03]

Self-Regulatory Organizations; The Options Clearing Corporation; Order Approving Proposed Rule Change To Allow for an Expansion of OCC's Internal Cross-Margining Program To Include the Ability of a Pair of Affiliated Clearing Members To Establish an Internal Non-Proprietary Cross-Margining Account

June 21, 2011.

I. Introduction

On March 17, 2011, The Options Clearing Corporation (''OCC'') filed with the Securities and Exchange Commission (''Commission'') the proposed rule change SR–OCC–2011–03 pursuant to Section 19(b)(1) of the Securities Exchange Act of 1934 (''Act'').[1] The proposed rule change was published for comment in the **Federal Register** on April 7, 2011.[2] The Commission received three comment letters on the proposal, including OCC's letter responding to one of the commenters.[3] This order approves the proposal.

II. Description of the Proposal

The purpose of this rule change is to expand OCC's internal cross-margining program to permit a pair of affiliated clearing members to establish a cross-margining account (''Internal Non-Proprietary Cross-Margining Account'') in which securities and security futures that are cleared by OCC in its capacity as a securities clearing agency may be cross-margined with commodity futures and options on such futures that are cleared by OCC in its capacity as a derivatives clearing organization (''DCO'') registered with the Commodity Futures Trading Commission (''CFTC'') under the Commodity Exchange Act (''CEA'').

In 2004, the CFTC and the Commission[4] approved OCC's proposal to create an ''internal cross-margining'' program under which an OCC clearing member could elect to cross-margin a non-proprietary futures account of a ''market professional''[5] with a non-proprietary securities account containing positions of the same market professional. At OCC, the securities and futures positions of all market professionals with cross-margined accounts at the clearing member are combined in a single Internal Non-Proprietary Cross-Margining Account of the clearing member at OCC. The existing program, which has operated successfully since 2004, requires that the same clearing member clear the securities and futures positions. In contrast, the existing cross-margining programs between OCC and other DCOs, such as the clearing division of the Chicago Mercantile Exchange (''CME'') and ICE Clear U.S., permit cross-margining where the member of the futures clearing organization is a different entity from its affiliate that is an OCC clearing member. The purpose of this proposed rule change is to expand the existing internal cross-margining program in an analogous way so that it would permit an Internal Non-Proprietary Cross-Margining Account to be maintained at OCC jointly by a pair of affiliated clearing members that clear transactions in securities options and in futures products through two different entities. In order to participate, both OCC clearing members would have to be affiliates of one another and would have to be registered as both a futures commission merchant under the CEA and as a broker-dealer under the Act.

OCC's current internal cross-margining program does not provide for internal cross-margining accounts to be carried jointly by a pair of affiliated clearing members because OCC did not believe in 2004 that there was any clearing member demand for such a service. Recently, however, OCC has learned that there is demand for such a service. Under OCC's current proposal, two affiliated clearing members will jointly maintain an Internal Non-Proprietary Cross-Margining Account. The clearing member that normally clears transactions in securities options would submit transactions in eligible securities options to the account for clearance, and the clearing member that normally clears transactions in futures

[1] 15 U.S.C. 78s(b)(1).

[2] Securities Exchange Act Release No. 34–63811 (February 1, 2011), 76 FR 6648 (February 7, 2011).

[3] Letter from Gene Thomas (Retired), (April 24, 2011); letter from Andrew S. Margolin, Associate General Counsel, Bank of America Corporation, to Elizabeth M. Murphy, Secretary, Commission (April 21, 2010); and letter from Stephen M. Szamarck, V.P. Associate General Counsel, OCC, to Elizabeth M. Murphy, Secretary, Commission (May 23, 2011).

[4] Securities Exchange Act Release No. 34–50509 (October 8, 2004), 69 FR 61289 (October 15, 2004).

[5] As set forth in OCC's By-Laws, a market professional could be a market-maker, specialist or person acting in a similar capacity on a securities exchange, or a member of a futures exchange trading for its own account. A non-proprietary market professional is any market professional that is required to be treated as a ''customer'' under the CEA, and therefore excludes any market professional that is affiliated with the carrying clearing member in a way that would cause its account to be treated as a ''proprietary account'' under Section 1.3(y) of the CFTC's regulations. OCC By-Laws, Article I, Definitions.

products would submit transactions in eligible futures products to the account for clearance.

OCC is amending its current By-Laws and Rules governing internal cross-margining to create rules similar to the rules of the long-standing cross-margining program between OCC and CME, for example, for affiliated clearing members. In the case of the cross-margining programs between OCC and other DCOs, there are two accounts at the clearing level—one at each of the participating clearing organizations. In the internal cross-margining program, there is no need for two separate accounts, which would in any event be margined together and for which the affiliated clearing members would in any event be jointly and severally liable as they are for the two accounts in the case of the OCC–CME program.

Article VI, Section 25(b) of OCC's By-Laws currently requires clearing members to obtain a ''Market Professional's Agreement for Internal Cross-Margining'' from each market professional whose positions are included in an Internal Non-Proprietary Cross-Margining Account. OCC will use a modified form of this agreement for the account held jointly by a pair of affiliated clearing members.[6] OCC does not intend to require current participants in the internal cross-margining program to obtain reexecuted agreements in updated form because the modifications are clarifications only and not substantive changes.

As in the case of the existing internal cross-margining program, the Internal Non-Proprietary Cross-Margining Account would be treated as a segregated futures account under Section 4d of the CEA and, in accordance with Appendix B to Part 190 of the CFTC's regulations, would be separately segregated from the regular segregated futures account that an OCC clearing member may maintain under Article VI, Section 3(f) of OCC's By-Laws. In order to expand the internal cross-margining program to include accounts carried by pairs of affiliated clearing members, OCC has requested that the CFTC either issue a new or amended order under Section 4d of the CEA.[7]

III. Comment Letters

The Commission received one comment letter opposing the proposed rule change[8] and one comment letter in favor of the proposed rule change.[9] OCC responded to the letter in opposition to the proposal.[10] The commenter opposing OCC's proposal stated that there was ''no universal advantage to commingled monies or other valued properties'' and that he ''visualize[d] the possibility of from [sic] frequent disagreements between the Dual Registrants and OCC.'' In its response, OCC disagreed and stated that cross-margining programs ''are consistent with clearing agency responsibilities under Section 17A of the Securities Exchange Act of 1934 and are highly beneficial to the clearing organizations, its clearing members and the public.''[11] OCC also stated in its response that the internal cross-margining program is limited to OCC clearing members and that participation in the program is completely voluntary. OCC response also indicated that it was not aware of any disagreements between dual registrants and OCC over the many years that the various cross-margining agreements have been in operation.

The commenter in support of OCC's proposed rule change stated he supported the proposal because it ''would harmonize the manner in which OCC conducts its internal cross-margining program with the manner in which existing cross-margining programs between OCC and other derivatives clearing organizations (*e.g.,* the Chicago Mercantile Exchange) are conducted.''[12]

IV. Discussion

Section 17A(b)(3)(F) of the Act[13] requires, among other things, that the rules of a clearing agency be designed to remove impediments to and perfect the mechanism of a national system for the prompt and accurate clearance and settlement of securities transactions. Since it granted approval of the first cross-margining program in 1988,[14] the Commission has found that cross-margining programs are consistent with clearing agency responsibilities under Section 17A of the Act[15] and highly beneficial to the clearing organization, its clearing members, and the public. The Commission has found that cross-margining programs enhance clearing member and systemic liquidity both in times of normal market conditions and in times of stress. They result in lower initial margin deposits, which can reduce the risk that a clearing member will become insolvent in a distressed market and the risk of a ripple effect of multiple insolvencies caused by the demise of a major market participant.[16]

V. Conclusion

On the basis of the foregoing, the Commission finds that the proposal is consistent with the requirements of the Act and in particular with the requirements of Section 17A of the Act[17] and the rules and regulations thereunder.

It Is Therefore Ordered, pursuant to Section 19(b)(2) of the Act,[18] that the proposed rule change (File No. SR–OCC–2011–03) be, and hereby is, approved.[19]

For the Commission by the Division of Trading and Markets, pursuant to delegated authority.[20]

Cathy H. Ahn,

Deputy Secretary.

[FR Doc. 2011–15850 Filed 6–23–11; 8:45 am]

BILLING CODE 8011–01–P

[6] The proposed form of the agreement, titled ''Market Professional's Agreement for Internal Cross-Margining (Affiliated Clearing Members)'' is attached as Exhibit 5A to the proposed rule change filing. The existing ''Market Professional's Agreement for Internal Cross-Margining'' applicable to the internal cross-margining program for single clearing members has been renamed ''Market Professional's Agreement for Internal Cross-Margining (Single Clearing Member)'' and is attached as Exhibit 5B to the proposed rule change filing. In addition to modifying the title to the form of the agreement applicable to single clearing members, a sentence has been added at the end of paragraph seven of that agreement to conform it to the corresponding provision in the form of the agreement for affiliated clearing members.

[7] OCC will not implement the internal cross-margining program for affiliated clearing members until after such time that the CFTC has issued an order or amended order under Section 4d of the CEA as discussed above.

[8] Letter from Gene Thomas, *supra* note 3.

[9] Letter from Andrew Margolin, *supra* note 3.

[10] Letter from OCC, *supra* note 3.

[11] *Id* at 1.

[12] *See* BofA Letter at 2.

[13] 15 U.S.C. 78q–1(b)(3)(F).

[14] Securities Exchange Act Release No. 34–26153 (October 3, 1988), 53 FR 39567 (October 7, 1988).

[15] 15 U.S.C. 78q–1.

[16] Securities Exchange Act Release No. 34–32708 (August 2, 1993), 58 FR 42586 (August 10, 1993).

[17] 15 U.S.C. 78q–1.

[18] 15 U.S.C. 78s(b)(2).

[19] In approving the proposed rule change, the Commission considered the proposal's impact on efficiency, competition and capital formation. 15 U.S.C. 78c(f).

[20] 17 CFR 200.30–3(a)(12).

SECURITIES AND EXCHANGE COMMISSION

[Release No. 34–64705; File No. SR–Phlx–2011–83]

Self-Regulatory Organizations; Notice of Filing and Immediate Effectiveness of Proposed Rule Change by NASDAQ OMX PHLX LLC Relating to a Remote Specialist Fee

June 20, 2011.

Pursuant to Section 19(b)(1) of the Securities Exchange Act of 1934

(''Act'')[1], and Rule 19b–4 thereunder,[2] notice is hereby given that on June 13, 2011, NASDAQ OMX PHLX LLC (''Phlx'' or ''Exchange'') filed with the Securities and Exchange Commission (''SEC'' or ''Commission'') the proposed rule change as described in Items I, II, and III below, which Items have been prepared by the Exchange. The Commission is publishing this notice to solicit comments on the proposed rule change from interested persons.

I. Self-Regulatory Organization's Statement of the Terms of Substance of the Proposed Rule Change

The Exchange proposes to adopt a new fee entitled ''Remote Specialist Fee.''

While fee changes pursuant to this proposal are effective upon filing, the Exchange has designated these changes to be operative on July 2, 2011. The text of the proposed rule change is available on the Exchange's Web site at *http://nasdaqtrader.com/micro.aspx?id=PHLXfilings,* at the principal office of the Exchange, and at the Commission's Public Reference Room.

II. Self-Regulatory Organization's Statement of the Purpose of, and Statutory Basis for, the Proposed Rule Change

In its filing with the Commission, the Exchange included statements concerning the purpose of and basis for the proposed rule change and discussed any comments it received on the proposed rule change. The text of these statements may be examined at the places specified in Item IV below. The Exchange has prepared summaries, set forth in sections A, B, and C below, of the most significant aspects of such statements.

A. Self-Regulatory Organization's Statement of the Purpose of, and Statutory Basis for, the Proposed Rule Change

1. Purpose

The purpose of the proposed rule change is to recoup costs associated with maintaining a remote specialist post on the Exchange's trading floor.

The Exchange recently amended Rule 501, Specialist Appointment, and Rule 1020, Registration and Functions of Options Specialists, to allow qualified Exchange members to act as off-floor specialists in one or more options classes (''Remote Specialist'').[3] In conjunction with recent amendments, the Exchange will staff and administer a physical location or post on the trading floor to provide on-floor market participants with a physical location to trade in options classes allocated to a Remote Specialist. This physical location on the Exchange's trading floor will require Exchange operations and regulatory staff to be present at this post. As such, the Exchange would incur additional operational and regulatory costs to maintain this post and seeks to defray such costs by assessing a Remote Specialist Fee.

The Exchange is proposing to assess Remote Specialists a monthly fee of $50 per option allocation.[4] The Exchange would cap the fee at $4,500 per month. The Exchange notes that the $4,500 proposed cap is equivalent to the Specialist Post Fee[5] which is currently assessed on on-floor Specialists.[6]

While fee changes pursuant to this proposal are effective upon filing, the Exchange has designated these changes to be operative on July 2, 2011.

2. Statutory Basis

The Exchange believes that its proposal to amend its Fee Schedule is consistent with Section 6(b) of the Act[7] in general, and furthers the objectives of Section 6(b)(4) of the Act[8] in particular, in that it is an equitable allocation of reasonable fees and other charges among Exchange members.

The Exchange believes that this Remote Specialist Fee is reasonable because it seeks to recoup costs that are incurred by the Exchange for maintaining a defined physical location or post on the Exchange's trading floor to facilitate interaction amongst market participants located on the Exchange's physical trading floor. The Exchange also believes the proposal is reasonable because the Exchange proposes to cap the Remote Specialist Fee at $4,500 per month, which is equal to the maximum fees the Exchange assesses on-floor Specialists for the Specialist Post Fee.

The Exchange believes that the proposed Remote Specialist Fee is equitable because it would be uniformly applied to all Remote Specialists.

B. Self-Regulatory Organization's Statement on Burden on Competition

The Exchange does not believe that the proposed rule change will impose any burden on competition not necessary or appropriate in furtherance of the purposes of the Act.

C. Self-Regulatory Organization's Statement on Comments on the Proposed Rule Change Received From Members, Participants, or Others

No written comments were either solicited or received.

III. Date of Effectiveness of the Proposed Rule Change and Timing for Commission Action

The foregoing rule change has become effective pursuant to Section 19(b)(3)(A)(ii) of the Act.[9] At any time within 60 days of the filing of the proposed rule change, the Commission summarily may temporarily suspend such rule change if it appears to the Commission that such action is necessary or appropriate in the public interest, for the protection of investors, or otherwise in furtherance of the purposes of the Act. If the Commission takes such action, the Commission shall institute proceedings to determine whether the proposed rule should be approved or disapproved.

IV. Solicitation of Comments

Interested persons are invited to submit written data, views, and arguments concerning the foregoing, including whether the proposed rule change is consistent with the Act. Comments may be submitted by any of the following methods:

Electronic Comments

- Use the Commission's Internet comment form (*http://www.sec.gov/rules/sro.shtml*); or
- Send an e-mail to *rule-comments@sec.gov.* Please include File Number SR–Phlx–2011–83 on the subject line.

---

[1] 15 U.S.C. 78s(b)(1).

[2] 17 CFR 240.19b–4.

[3] *See* Securities Exchange Act Release No. 64591 (June 8, 2011), 76 FR 33383 (June 2, 2011) (SR–Phlx–2011–79). A Remote Specialist is an options specialist in one or more classes that may not have a physical presence on an Exchange floor and is approved by the Exchange pursuant to Rule 501.

[4] Pursuant to Rule 507, Application for Approval as an SQT or RSQT and Assignment in Options, a Remote Specialist must meet certain requirements to be approved as an RSQT. Rule 507(b)(i) describes the process for the assignment of options. *See* Exchange Rule 507. An RSQT is defined in Exchange Rule 1014(b)(ii)(B) as an ROT that is a member or member organization with no physical trading floor presence who has received permission from the Exchange to generate and submit option quotations electronically in options to which such RSQT has been assigned. An RSQT may only submit such quotations electronically from off the floor of the Exchange.

[5] The Exchange assesses a Specialist Post fee of $1,125 per month for a quarter post and $4,500 per month for a full post with a maximum of $4,500 per month. *See* Exchange's Fee Schedule. The Specialist posts are designed to facilitate Specialist interaction with the trading crowd. *See* Securities Exchange Act Release No. 59852 (April 30, 2009), 74 FR 21424 (May 7, 2009) (SR–Phlx–2009–39).

[6] Specialists are members who are registered as options specialists pursuant to Rule 1020(a). *See* Exchange Rule 1020.

[7] 15 U.S.C. 78f(b).

[8] 15 U.S.C. 78f(b)(4).

[9] 15 U.S.C. 78s(b)(3)(A)(ii).

Paper Comments

• Send paper comments in triplicate to Elizabeth M. Murphy, Secretary, Securities and Exchange Commission, 100 F Street, NE., Washington, DC 20549–1090.

All submissions should refer to File Number SR–Phlx–2011–83. This file number should be included on the subject line if e-mail is used. To help the Commission process and review your comments more efficiently, please use only one method. The Commission will post all comments on the Commission's Internet Web site (*http://www.sec.gov/rules/sro.shtml*). Copies of the submission, all subsequent amendments, all written statements with respect to the proposed rule change that are filed with the Commission, and all written communications relating to the proposed rule change between the Commission and any person, other than those that may be withheld from the public in accordance with the provisions of 5 U.S.C. 552, will be available for Web site viewing and printing in the Commission's Public Reference Room, 100 F Street, NE., Washington, DC 20549, on official business days between the hours of 10 a.m. and 3 p.m. Copies of the filing also will be available for inspection and copying at the principal office of the Exchange. All comments received will be posted without change; the Commission does not edit personal identifying information from submissions. You should submit only information that you wish to make available publicly. All submissions should refer to File Number SR–Phlx–2011–83 and should be submitted on or before July 15, 2011.

For the Commission, by the Division of Trading and Markets, pursuant to delegated authority.[10]

Cathy H. Ahn,

Deputy Secretary.

[FR Doc. 2011–15776 Filed 6–23–11; 8:45 am]

BILLING CODE 8011–01–P

[10] 17 CFR 200.30–3(a)(12).

SECURITIES AND EXCHANGE COMMISSION

[Release No. 34–64707; File No. 600–23]

Self-Regulatory Organizations; Fixed Income Clearing Corporation; Notice of Filing and Order Approving an Extension of Temporary Registration as a Clearing Agency

June 20, 2011.

The Securities and Exchange Commission (''Commission'') is publishing this notice and order to solicit comments from interested persons and to extend the Fixed Income Clearing Corporation's (''FICC'') temporary registration as a clearing agency through June 30, 2013.[1]

On February 2, 1987, pursuant to Sections 17A(b) and 19(a) of the Securities Exchange Act of 1934 (''Act'')[2] and Rule 17Ab2–1 promulgated thereunder,[3] the Commission granted the MBS Clearing Corporation (''MBSCC'') registration as a clearing agency on a temporary basis for a period of eighteen months.[4] The Commission subsequently extended MBSCC's registration through June 30, 2003.[5]

On May 24, 1988, pursuant to Sections 17A(b) and 19(a) of the Act[6] and Rule 17Ab2–1 promulgated thereunder,[7] the Commission granted the Government Securities Clearing Corporation (''GSCC'') registration as a clearing agency on a temporary basis for a period of three years.[8] The Commission subsequently extended GSCC's registration through June 30, 2003.[9]

On January 1, 2003, MBSCC was merged into GSCC, and GSCC was renamed FICC.[10] The Commission subsequently extended FICC's temporary registration through June 30, 2011.[11]

On April 11, 2011, FICC requested that the Commission extend FICC's temporary registration until such time as the Commission is prepared to grant FICC permanent registration.[12]

On March 12, 2008, FICC filed a proposed rule change pursuant to Section 19(b)(1) of the Act and Rule 19b–4 thereunder to introduce central counterparty (''CCP'') and guarantee settlement services to its MBS Division.[13] Currently, FICC acts as the CCP and provides guarantee settlement services for its Government Securities Division members' eligible U.S. Government securities transactions but does not act as the CCP or provide guarantee settlement services for its MBS Division members' eligible mortgage-backed securities transactions.

Pursuant to this Notice and Order, the Commission is extending FICC's temporary registration as a clearing agency in order that FICC may continue to operate as a registered clearing agency and may continue to provide uninterrupted clearing and settlement services to its users. The Commission will consider permanent registration of FICC at a future date after the Commission has acted upon FICC's proposed rule change to introduce CCP and guarantee settlement services to its MBS Division.

Interested persons are invited to submit written data, views, and arguments concerning the foregoing. Comments may be submitted by any of the following methods:

[1] FICC is the successor to MBS Clearing Corporation and Government Securities Clearing Corporation.

[2] 15 U.S.C. 78q–1(b) and 78s(a).

[3] 17 CFR 240.17Ab2–1.

[4] Securities Exchange Act Release No. 24046 (February 2, 1987), 52 FR 4218.

[5] Securities Exchange Act Release Nos. 25957 (August 2, 1988), 53 FR 29537; 27079 (July 31, 1989), 54 FR 34212; 28492 (September 28, 1990), 55 FR 41148; 29751 (September 27, 1991), 56 FR 50602; 31750 (January 21, 1993), 58 FR 6424; 33348 (December 15, 1993), 58 FR 68183; 35132 (December 21, 1994), 59 FR 67743; 37372 (June 26, 1996), 61 FR 35281; 38784 (June 27, 1997), 62 FR 36587; 39776 (March 20, 1998), 63 FR 14740; 41211 (March 24, 1999), 64 FR 15854; 42568 (March 23, 2000), 65 FR 16980; 44089 (March 21, 2001), 66 FR 16961; 44831 (September 21, 2001), 66 FR 49728; 45607 (March 20, 2002), 67 FR 14755; 46136 (June 27, 2002), 67 FR 44655.

[6] *Supra* note 2.

[7] *Supra* note 3.

[8] Securities Exchange Act Release No. 25740 (May 24, 1988), 53 FR 19839.

[9] Securities Exchange Act Release Nos. 25740 (May 24, 1988), 53 FR 19639; 29236 (May 24, 1991), 56 FR 24852; 32385 (June 3, 1993), 58 FR 32405; 35787 (May 31, 1995), 60 FR 30324; 36508 (November 27, 1995), 60 FR 61719; 37983 (November 25, 1996), 61 FR 64183; 38698 (May 30, 1997), 62 FR 30911; 39696 (February 24, 1998), 63 FR 10253; 41104 (February 24, 1999), 64 FR 10510; 41805 (August 27, 1999), 64 FR 48682; 42335 (January 12, 2000), 65 FR 3509; 43089 (July 28, 2000), 65 FR 48032; 43900 (January 29, 2001), 66 FR 8988; 44553 (July 13, 2001), 66 FR 37714; 45164 (December 18, 2001), 66 FR 66957; 46135 (June 27, 2002), 67 FR 44655.

[10] Securities Exchange Act Release No. 47015 (December 17, 2002), 67 FR 78531 (December 24, 2002) [File Nos. SR–GSCC–2002–07 and SR–MBSCC–2002–01].

[11] Securities Exchange Act Release Nos. 48116 (July 1, 2003), 68 FR 41031; 49940 (June 29, 2004), 69 FR 40695; 51911 (June 23, 2005), 70 FR 37878; 54056 (June 28, 2006), 71 FR 38193; 55920 (June 18, 2007), 72 FR 35270; 57949 (June 11, 2008), 73 FR 34808; 60189 (June 29, 2009), 74 FR 32198; and 62348 (June 22, 2010), 75 FR 36723.

[12] Letter from Nikki Poulos, Managing Director and General Counsel, FICC (April 11, 2011).

[13] The filed proposed rule change can be viewed at *http://www.dtcc.com/downloads/legal/rule_filings/2008/ficc/2008-01.pdf. See also* FICC White Paper: ''A Central Counterparty For Mortgage-Backed Securities: Paving The Way'' at *http://www.dtcc.com/downloads/leadership/whitepapers/ccp.pdf.*

Electronic Comments

- Use the Commission's Internet comment form (*http://www.sec.gov/rules/sro.shtml);* or
- Send an e-mail to *rule-comments@sec.gov.* Please include File Number 600–23 on the subject line.

Paper Comments

- Send paper comments in triplicate to Elizabeth M. Murphy, Secretary, Securities and Exchange Commission, 100 F Street, NE., Washington, DC 20549–1090.

All submissions should refer to File Number 600–23. This file number should be included on the subject line if e-mail is used. To help the Commission process and review your comments more efficiently, please use only one method. The Commission will post all comments on the Commission's Internet Web site (*http://www.sec.gov/rules/sro.shtml).* Copies of the submission, all subsequent amendments, all written statements with respect to the proposed rule change that are filed with the Commission, and all written communications relating to the proposed rule change between the Commission and any person, other than those that may be withheld from the public in accordance with the provisions of 5 U.S.C. 552, will be available for website viewing and printing in the Commission's Public Reference Section, 100 F Street, NE., Washington, DC 20549 on official business days between the hours of 10 a.m. and 3 p.m. Copies of such filing also will be available for inspection and copying at the principal office of FICC and on FICC's Web site at *http://www.ficc.com.* All comments received will be posted without change; the Commission does not edit personal identifying information from submissions. You should submit only information that you wish to make available publicly. All submissions should refer to File Number 600–23 and should be submitted on or before July 15, 2011.

It is therefore ordered that FICC's temporary registration as a clearing agency (File No. 600–23) be and hereby is extended through June 30, 2013.

For the Commission by the Division of Trading and Markets pursuant to delegated authority.[14]

Cathy H. Ahn,

Deputy Secretary.

[FR Doc. 2011–15805 Filed 6–23–11; 8:45 am]

BILLING CODE 8011–01–P

[14] 17 CFR 200.30–3(a)(50)(i).

SMALL BUSINESS ADMINISTRATION

[Disaster Declaration #12615 and #12616]

Oklahoma Disaster Number OK–00050

AGENCY: U.S. Small Business Administration.

ACTION: Amendment 1.

SUMMARY: This is an amendment of the Presidential declaration of a major disaster for the State of Oklahoma (FEMA—1989—DR), dated 06/06/2011.

Incident: Severe Storms, Tornadoes, Straight-line Winds, and Flooding.

Incident Period: 05/22/2011 through 05/25/2011.

EFFECTIVE DATES: 06/16/2011.

Physical Loan Application Deadline Date: 08/05/2011.

EIDL Loan Application Deadline Date: 03/06/2012.

ADDRESSES: Submit completed loan applications to: U.S. Small Business Administration, Processing and Disbursement Center, 14925 Kingsport Road, Fort Worth, TX 76155.

FOR FURTHER INFORMATION CONTACT: A Escobar, Office of Disaster Assistance, U.S. Small Business Administration, 409 3rd Street, SW., Suite 6050, Washington, DC 20416.

SUPPLEMENTARY INFORMATION: The notice of the Presidential disaster declaration for the State of OKLAHOMA, dated 06/06/2011 is hereby amended to include the following areas as adversely affected by the disaster:

Primary Counties: (Physical Damage and Economic Injury Loans):

Caddo.

Contiguous Counties: (Economic Injury Loans Only):

Oklahoma: Custer, Kiowa, Washita.

All other information in the original declaration remains unchanged.

(Catalog of Federal Domestic Assistance Numbers 59002 and 59008)

James E. Rivera,

Associate Administrator for Disaster Assistance.

[FR Doc. 2011–15908 Filed 6–23–11; 8:45 am]

BILLING CODE 8025–01–P

SMALL BUSINESS ADMINISTRATION

[Disaster Declaration #12630 and #12631]

Illinois Disaster Number IL–00031

AGENCY: U.S. Small Business Administration.

ACTION: Amendment 1.

SUMMARY: This is an amendment of the Presidential declaration of a major disaster for Public Assistance Only for the State of Illinois (FEMA–1991–DR), dated 06/10/2011.

Incident: Severe Storms and Flooding.

Incident Period: 04/19/2011 through 06/14/2011.

Effective Date: 06/14/2011.

Physical Loan Application Deadline Date: 08/09/2011.

Economic Injury (EIDL) Loan Application Deadline Date: 03/12/2012.

ADDRESSES: Submit completed loan applications to: U.S. Small Business Administration, Processing and Disbursement Center, 14925 Kingsport Road, Fort Worth, TX 76155.

FOR FURTHER INFORMATION CONTACT: A. Escobar, Office of Disaster Assistance, U.S. Small Business Administration, 409 3rd Street, SW., Suite 6050, Washington, DC 20416.

SUPPLEMENTARY INFORMATION: The notice of the President's major disaster declaration for Private Non-Profit organizations in the State of Illinois, dated 06/10/2011, is hereby amended to establish the incident period for this disaster as beginning 04/19/2011 and continuing through 06/14/2011.

All other information in the original declaration remains unchanged.

(Catalog of Federal Domestic Assistance Numbers 59002 and 59008)

James E. Rivera,

Associate Administrator for Disaster Assistance.

[FR Doc. 2011–15906 Filed 6–23–11; 8:45 am]

BILLING CODE 8025–01–P

SMALL BUSINESS ADMINISTRATION

[Disaster Declaration #12566 and #12567]

Kentucky Disaster Number KY–00039

AGENCY: U.S. Small Business Administration.

ACTION: Amendment 7.

SUMMARY: This is an amendment of the Presidential declaration of a major disaster for Public Assistance Only for the Commonwealth of Kentucky (FEMA–1976–DR), dated 05/04/2011.

Incident: Severe Storms, Tornadoes, and Flooding.

Incident Period: 04/12/2011 through 05/20/2011.

Effective Date: 06/17/2011.

Physical Loan Application Deadline Date: 07/05/2011.

Economic Injury (EIDL) Loan Application Deadline Date: 02/06/2012.

ADDRESSES: Submit completed loan applications to: U.S. Small Business Administration, Processing and Disbursement Center, 14925 Kingsport Road, Fort Worth, TX 76155.

FOR FURTHER INFORMATION CONTACT: A. Escobar, Office of Disaster Assistance, U.S. Small Business Administration, 409 3rd Street, SW., Suite 6050, Washington, DC 20416.

SUPPLEMENTARY INFORMATION: The notice of the President's major disaster declaration for Private Non-Profit organizations in the Commonwealth of Kentucky, dated 05/04/2011, is hereby amended to re-establish the incident period for this disaster as beginning 04/12/2011 and continuing through 05/20/2011.

All other information in the original declaration remains unchanged.

(Catalog of Federal Domestic Assistance Numbers 59002 and 59008)

James E. Rivera,

Associate Administrator for Disaster Assistance.

[FR Doc. 2011–15907 Filed 6–23–11; 8:45 am]

BILLING CODE 8025–01–P

SMALL BUSINESS ADMINISTRATION

Surrender of License of Small Business Investment Company

Pursuant to the authority granted to the United States Small Business Administration under the Small Business Investment Act of 1958, under Section 309 of the Act and Section 107.1900 of the Small Business Administration Rules and Regulations (13 CFR 107.1900) to function as a small business investment company under the Small business Investment Company License No. 01/70–0189 issued to Pacific Northwest Partners, L.P., and said license is hereby declared null and void.

United States Small Business Administration.

Sean J. Greene,

AA/Investment.

[FR Doc. 2011–15774 Filed 6–23–11; 8:45 am]

BILLING CODE 8025–01–P

DEPARTMENT OF STATE

[Public Notice 7509]

Determination Under Subsection 402(d)(1) of the Trade Act of 1974, as Amended Continuation of Waiver Authority

Pursuant to the authority vested in the President under the Trade Act of 1974, as amended, Public Law 93–618, 88 Stat. 1978 (hereinafter ''the Act''), and assigned to the Secretary of State by virtue of Section 1(a) of Executive Order 13346 of July 8, 2004, I determine, pursuant to Section 402(d)(1) of the Act, 19 U.S.C. 2432(d)(1), that the further extension of the waiver authority granted by Section 402 of the Act will substantially promote the objectives of Section 402 of the Act. I further determine that continuation of the waiver applicable to Belarus will substantially promote the objectives of Section 402 of the Act.

This determination shall be published in the **Federal Register**.

Dated: June 1, 2011.

Hillary Rodham Clinton,

Secretary of State.

[FR Doc. 2011–15904 Filed 6–23–11; 8:45 am]

BILLING CODE 4710–23–P

DEPARTMENT OF TRANSPORTATION

Federal Motor Carrier Safety Administration

[Docket No. FMCSA–2011–0163]

Agency Information Collection Activities; Request for Comments on a New Information Collection: Evaluating the Safety Benefits of an On-Board Monitoring System in Commercial Vehicle Operations: Independent Evaluation and Data Analysis

AGENCY: Federal Motor Carrier Safety Administration (FMCSA), DOT.

ACTION: Notice and request for comments.

SUMMARY: In accordance with the Paperwork Reduction Act of 1995, FMCSA announces its plan to submit the Information Collection Request (ICR) described below to the Office of Management and Budget (OMB) for review and approval. The purpose of this information collection is to assess Commercial Motor Vehicle (CMV) drivers' expectations, attitudes and acceptance of an on-board monitoring system (OBMS), as a part of a Field Operational Test (FOT) study. On March 29, 2011 FMCSA published a **Federal Register** notice allowing for a 60-day comment period on the ICR. One comment was received.

DATES: Please send your comments by July 25, 2011. OMB must receive your comments by this date in order to act quickly on the ICR.

ADDRESSES: All comments should reference Federal Docket Management System (FDMS) Docket Number FMCSA–2011–0163. Interested persons are invited to submit written comments on the proposed information collection to the Office of Information and Regulatory Affairs, Office of Management and Budget. Comments should be addressed to the attention of the Desk Officer, Department of Transportation/Federal Motor Carrier Safety Administration, and sent via electronic mail to *oira_submission@omb.eop.gov,* or faxed to (202) 395–6974, or mailed to the Office of Information and Regulatory Affairs, Office of Management and Budget, Docket Library, Room 10102, 725 17th Street, NW., Washington, DC 20503.

FOR FURTHER INFORMATION CONTACT: Olu Ajayi, Research Division, Department of Transportation, Federal Motor Carrier Safety Administration, West Building 6th Floor, 1200 New Jersey Avenue, SE., Washington, DC 20590. Telephone: 202–366–0440; e-mail *olu.ajayi@dot.gov.* Office hours are from 9 a.m. to 5 p.m., Monday through Friday, except Federal Holidays.

SUPPLEMENTARY INFORMATION:

Title: Evaluating the Safety Benefits of an On-Board Monitoring System in Commercial Vehicle Operations: Independent Evaluation and Data Analysis.

OMB Control Number: 2126–XXXX.

Type of Request: New collection.

Respondents: Commercial motor vehicle (CMV) drivers.

Estimated Number of Respondents: 500 CMV drivers.

Estimated Time per Response: 20 minutes for the pre-study questionnaire, 15 minutes for during- and post-study questionnaires, and 20 minutes for the exit interview at the end of the study.

Expiration Date: N/A.

Frequency of Response: Drivers will be asked to take a total of four unique questionnaires administered six times over the course of 18 months.

Estimated Total Annual Burden: 792 hours [(250 responses × 20 minutes/60 minutes for pre-study questionnaire) + (1,250 responses × 15 minutes/60 minutes for intervention questionnaire) + (1,250 responses × 15 minutes/60 minutes for withdrawal questionnaire) + (250 responses × 20 minutes/60 minutes for exit interview) = 792 hours].

Background: The goal of the OBMS and safety research study FOT is to determine whether on-board monitoring and feedback will reduce at-risk behavior among CMV drivers and improve driver safety performance. The purpose of the questionnaire portion is to assess CMV drivers' acceptance of the OBMS being evaluated in the FOT. A series of four unique questionnaires will be conducted in the Baseline (no feedback), Intervention (receiving feedback), and Withdrawal (no feedback) periods. These questionnaires will address the CMV drivers' expectations, experiences and attitudes

toward the OBMS and assess changes in their perception over the 18-month study period. All study questionnaires will be available in both paper and electronic form. The results will be summarized and integrated into the rest of the larger FOT study report that evaluates the effectiveness of the OBMS in improving safety and driver performance.

Public Comments Invited: You are asked to comment on any aspect of this information collection, including: (1) Whether the proposed collection is necessary for the performance of FMCSA's functions; (2) the accuracy of the estimated burden; (3) ways for FMCSA to enhance the quality, usefulness, and clarity of the collected information; and (4) ways that the burden could be minimized without reducing the quality of the collected information.

Issued on: June 20, 2011.

Kelly Leone,

Associate Administrator for Research and Information Technology.

[FR Doc. 2011–15921 Filed 6–23–11; 8:45 am]

BILLING CODE 4910–EX–P

DEPARTMENT OF TRANSPORTATION

Federal Motor Carrier Safety Administration

[Docket No. FMCSA–2009–0121]

Qualification of Drivers; Exemption Applications; Vision

AGENCY: Federal Motor Carrier Safety Administration (FMCSA), DOT.

ACTION: Notice of renewal of exemptions; request for comments.

SUMMARY: FMCSA announces its decision to renew the exemptions from the vision requirement in the Federal Motor Carrier Safety Regulations for 14 individuals. FMCSA has statutory authority to exempt individuals from the vision requirement if the exemptions granted will not compromise safety. The Agency has concluded that granting these exemption renewals will provide a level of safety that is equivalent to, or greater than, the level of safety maintained without the exemptions for these commercial motor vehicle (CMV) drivers.

DATES: This decision is effective July 16, 2011. Comments must be received on or before July 25, 2011.

ADDRESSES: You may submit comments bearing the Federal Docket Management System (FDMS) numbers: FMCSA–2009–0121, using any of the following methods:

- *Federal eRulemaking Portal:* Go to *http://www.regulations.gov.* Follow the on-line instructions for submitting comments.
- *Mail:* Docket Management Facility; U.S. Department of Transportation, 1200 New Jersey Avenue, SE., West Building Ground Floor, Room W12–140, Washington, DC 20590–0001.
- *Hand Delivery or Courier:* West Building Ground Floor, Room W12–140, 1200 New Jersey Avenue, SE., Washington, DC, between 9 a.m. and 5 p.m., Monday through Friday, except Federal Holidays.
- *Fax:* 1–202–493–2251.

Instructions: Each submission must include the Agency name and the docket number for this notice. Note that DOT posts all comments received without change to *http://www.regulations.gov,* including any personal information included in a comment. Please see the Privacy Act heading below.

Docket: For access to the docket to read background documents or comments, go to *http://www.regulations.gov* at any time or Room W12–140 on the ground level of the West Building, 1200 New Jersey Avenue, SE., Washington, DC, between 9 a.m. and 5 p.m., Monday through Friday, except Federal holidays. The Federal Docket Management System (FDMS) is available 24 hours each day, 365 days each year. If you want acknowledgment that we received your comments, please include a self-addressed, stamped envelope or postcard or print the acknowledgement page that appears after submitting comments on-line.

Privacy Act: Anyone may search the electronic form of all comments received into any of our dockets by the name of the individual submitting the comment (or of the person signing the comment, if submitted on behalf of an association, business, labor union, etc.). You may review DOT's Privacy Act Statement for the FDMS published in the **Federal Register** on January 17, 2008 (73 FR 3316), or you may visit *http://edocket.access.gpo.gov/2008/pdf/E8–785.pdf.*

FOR FURTHER INFORMATION CONTACT: Elaine M. Papp, Chief, Medical Programs, (202)–366–4001, *fmcsamedical@dot.gov,* FMCSA, Department of Transportation, 1200 New Jersey Avenue, SE., Room W64–224, Washington, DC 20590–0001. Office hours are from 8:30 a.m. to 5 p.m. Monday through Friday, except Federal holidays.

SUPPLEMENTARY INFORMATION:

Background

Under 49 U.S.C. 31136(e) and 31315, FMCSA may renew an exemption from the vision requirements in 49 CFR 391.41(b)(10), which applies to drivers of CMVs in interstate commerce, for a two-year period if it finds ''such exemption would likely achieve a level of safety that is equivalent to, or greater than, the level that would be achieved absent such exemption.'' The procedures for requesting an exemption (including renewals) are set out in 49 CFR Part 381.

Exemption Decision

This notice addresses 14 individuals who have requested renewal of their exemptions in accordance with FMCSA procedures. FMCSA has evaluated these 14 applications for renewal on their merits and decided to extend each exemption for a renewable two-year period. They are:

Robert L. Brown
Nicholas Cafaro
Barry G. Church
David J. Comeaux
John J. Davis
Steven L. Forristall
Rocky D. Gysberg
Randy L. Huelster
Charlie H. Lefew
Steve J. Morrison
Joseph B. Peacock
Charles A. Terry
Steven L. Thomas
Daniel A. Wescott

The exemptions are extended subject to the following conditions: (1) That each individual has a physical examination every year (a) by an ophthalmologist or optometrist who attests that the vision in the better eye continues to meet the standard in 49 CFR 391.41(b)(10) and (b) by a medical examiner who attests that the individual is otherwise physically qualified under 49 CFR 391.41; (2) that each individual provides a copy of the ophthalmologist's or optometrist's report to the medical examiner at the time of the annual medical examination; and (3) that each individual provide a copy of the annual medical certification to the employer for retention in the driver's qualification file and retains a copy of the certification on his/her person while driving for presentation to a duly authorized Federal, State, or local enforcement official. Each exemption will be valid for two years unless rescinded earlier by FMCSA. The exemption will be rescinded if: (1) The person fails to comply with the terms and conditions of the exemption; (2) the

exemption has resulted in a lower level of safety than was maintained before it was granted; or (3) continuation of the exemption would not be consistent with the goals and objectives of 49 U.S.C. 31136(e) and 31315.

Basis for Renewing Exemptions

Under 49 U.S.C. 31315(b)(1), an exemption may be granted for no longer than two years from its approval date and may be renewed upon application for additional two year periods. In accordance with 49 U.S.C. 31136(e) and 31315, each of the 14 applicants has satisfied the entry conditions for obtaining an exemption from the vision requirements (74 FR 26461; 74 FR 34630). Each of these 14 applicants has requested renewal of the exemption and has submitted evidence showing that the vision in the better eye continues to meet the standard specified at 49 CFR 391.41(b)(10) and that the vision impairment is stable. In addition, a review of each record of safety while driving with the respective vision deficiencies over the past two years indicates each applicant continues to meet the vision exemption standards. These factors provide an adequate basis for predicting each driver's ability to continue to drive safely in interstate commerce. Therefore, FMCSA concludes that extending the exemption for each renewal applicant for a period of two years is likely to achieve a level of safety equal to that existing without the exemption.

Request for Comments

FMCSA will review comments received at any time concerning a particular driver's safety record and determine if the continuation of the exemption is consistent with the requirements at 49 U.S.C. 31136(e) and 31315. However, FMCSA requests that interested parties with specific data concerning the safety records of these drivers submit comments by July 25, 2011.

FMCSA believes that the requirements for a renewal of an exemption under 49 U.S.C. 31136(e) and 31315 can be satisfied by initially granting the renewal and then requesting and evaluating, if needed, subsequent comments submitted by interested parties. As indicated above, the Agency previously published notices of final disposition announcing its decision to exempt these 14 individuals from the vision requirement in 49 CFR 391.41(b)(10). The final decision to grant an exemption to each of these individuals was made on the merits of each case and made only after careful consideration of the comments received to its notices of applications. The notices of applications stated in detail the qualifications, experience, and medical condition of each applicant for an exemption from the vision requirements. That information is available by consulting the above cited **Federal Register** publications.

Interested parties or organizations possessing information that would otherwise show that any, or all, of these drivers are not currently achieving the statutory level of safety should immediately notify FMCSA. The Agency will evaluate any adverse evidence submitted and, if safety is being compromised or if continuation of the exemption would not be consistent with the goals and objectives of 49 U.S.C. 31136(e) and 31315, FMCSA will take immediate steps to revoke the exemption of a driver.

Issued on: June 13, 2011.

Larry W. Minor,

Associate Administrator for Policy.

[FR Doc. 2011–15923 Filed 6–23–11; 8:45 am]

BILLING CODE 4910–EX–P

DEPARTMENT OF TRANSPORTATION

Federal Motor Carrier Safety Administration

[Docket No. FMCSA–2011–0140]

Qualification of Drivers; Exemption Applications; Vision

AGENCY: Federal Motor Carrier Safety Administration (FMCSA), DOT.

ACTION: Notice of applications for exemptions; request for comments.

SUMMARY: FMCSA announces receipt of applications from 17 individuals for exemption from the vision requirement in the Federal Motor Carrier Safety Regulations. If granted, the exemptions would enable these individuals to qualify as drivers of commercial motor vehicles (CMVs) in interstate commerce without meeting the Federal vision standard.

DATES: Comments must be received on or before July 25, 2011.

ADDRESSES: You may submit comments bearing the Federal Docket Management System (FDMS) Docket No. FMCSA–2011–0140 using any of the following methods:

- *Federal eRulemaking Portal:* Go to *http://www.regulations.gov.* Follow the on-line instructions for submitting comments.
- *Mail:* Docket Management Facility; U.S. Department of Transportation, 1200 New Jersey Avenue, SE., West Building Ground Floor, Room W12–140, Washington, DC 20590–0001.
- *Hand Delivery:* West Building Ground Floor, Room W12–140, 1200 New Jersey Avenue, SE., Washington, DC, between 9 a.m. and 5 p.m., Monday through Friday, except Federal holidays.
- Fax: 1–202–493–2251.

Instructions: Each submission must include the Agency name and the docket numbers for this notice. Note that all comments received will be posted without change to *http://www.regulations.gov,* including any personal information provided. Please see the Privacy Act heading below for further information.

Docket: For access to the docket to read background documents or comments, go to *http://www.regulations.gov* at any time or Room W12–140 on the ground level of the West Building, 1200 New Jersey Avenue, SE., Washington, DC, between 9 a.m. and 5 p.m., Monday through Friday, except Federal holidays. The FDMS is available 24 hours each day, 365 days each year. If you want acknowledgment that we received your comments, please include a self-addressed, stamped envelope or postcard or print the acknowledgement page that appears after submitting comments on-line.

Privacy Act: Anyone may search the electronic form of all comments received into any of our dockets by the name of the individual submitting the comment (or of the person signing the comment, if submitted on behalf of an association, business, labor union, etc.). You may review DOT's Privacy Act Statement for the FDMS published in the **Federal Register** on January 17, 2008 (73 FR 3316), or you may visit *http://edocket.access.gpo.gov/2008/pdf/E8–785.pdf.*

FOR FURTHER INFORMATION CONTACT: Elaine M. Papp, Chief, Medical Programs, (202) 366–4001, *fmcsamedical@dot.gov,* FMCSA, Department of Transportation, 1200 New Jersey Avenue, SE., Room W64–224, Washington, DC 20590–0001. Office hours are from 8:30 a.m. to 5 p.m., Monday through Friday, except Federal holidays.

SUPPLEMENTARY INFORMATION:

Background

Under 49 U.S.C. 31136(e) and 31315, FMCSA may grant an exemption from the Federal Motor Carrier Safety Regulations for a 2-year period if it finds ''such exemption would likely achieve a level of safety that is equivalent to, or greater than, the level that would be achieved absent such exemption.''

FMCSA can renew exemptions at the end of each 2-year period. The 17 individuals listed in this notice have each requested such an exemption from the vision requirement in 49 CFR 391.41(b)(10), which applies to drivers of CMVs in interstate commerce. Accordingly, the Agency will evaluate the qualifications of each applicant to determine whether granting an exemption will achieve the required level of safety mandated by statute.

Qualifications of Applicants

Danny F. Burnley

Mr. Burnley, age 49, has loss of vision in his right eye due to a traumatic injury that occurred during his late teens or early twenties. The best corrected visual acuity in his right eye is 20/400 and in his left eye, 20/20. Following an examination in 2011, his optometrist noted, ''Based upon my findings and medical expertise, I Jamison J. Heffron, O.D. hereby certify Danny Burnley to be visually able to safely operate a commercial motor vehicle.'' Mr. Burnley reported that he has driven straight trucks for 3 years, accumulating 6,000 miles and tractor-trailer combinations for 3 years, accumulating 6,000 miles. He holds a Class A Commercial Driver's License (CDL) from Kentucky. His driving record for the last 3 years shows no crashes and no convictions for moving violations in a CMV.

Bruce A. Cameron

Mr. Cameron, 58, has had a branch retinal vein occlusion in his left eye since 2005. The best corrected visual acuity in his right eye is 20/20 and in his left eye, count-finger vision. Following an examination in 2011, his optometrist noted, ''In my opinion, Mr. Cameron has sufficient vision to perform the driving tasks required to operate a commercial vehicle.'' Mr. Cameron reported that he has driven straight trucks for 45 years, accumulating 225,000 miles and tractor-trailer combinations for 30 years, accumulating 150,000 miles. He holds a Class A CDL from North Dakota. His driving record for the last 3 years shows no crashes and no convictions for moving violations in a CMV.

Charles E. Carter

Mr. Carter, 54, has complete loss of vision in his left eye due to a traumatic injury sustained in 1992. The best corrected visual acuity in his right eye is 20/20. Following an examination in 2011, his optometrist noted, ''In my own opinion, Charles has sufficient vision to perform driving tasks required to operate a commercial vehicle.'' Mr. Carter reported that he has driven tractor-trailer combinations for 5 years, accumulating 360,000 miles. He holds a Class A CDL from Michigan. His driving record for the last 3 years shows no crashes and no convictions for moving violations in a CMV.

Ronald J. Claud

Mr. Claud, 65, has had retinal scarring in his left eye due to a traumatic injury since 1962. The best corrected visual acuity in his right eye is 20/20 and in his left eye, 3/180. Following an examination in 2011, his optometrist noted, ''I do not see any reason why he cannot obtain a commercial vehicle drivers license.'' Mr. Claud reported that he has driven straight trucks for 40 years, accumulating 200,000 miles and tractor-trailer combinations for 28 years, accumulating 168,000 miles. He holds a Class C operator's license from New York. His driving record for the last 3 years shows no crashes and no convictions for moving violations in a CMV.

Stewart K. Clayton

Mr. Clayton, 50, has had inferior retinal coloboma in his right eye since birth. The best corrected visual acuity in his right eye is 20/100 and in his left eye, 20/20. Following an examination in 2010, his optometrist noted, ''Mr. Clayton has sufficient vision to perform driving tasks required to operate a commercial vehicle.'' Mr. Clayton reported that he has driven straight trucks for 31 years, accumulating 744,000 miles and tractor-trailer combinations for 31 years, accumulating 744,000 miles. He holds a Class A CDL from Texas. His driving record for the last 3 years shows no crashes and no convictions for moving violations in a CMV.

Sean R. Conorman

Mr. Conorman, 40, has had amblyopia in his left eye since childhood. The best corrected visual acuity in his right eye is 20/20 and in his left eye, 20/200. Following an examination in 2011, his ophthalmologist noted, ''In my opinion, patient has sufficient vision to perform the driving tasks required to operate a commercial vehicle.'' Mr. Conorman reported that he has driven straight trucks for 5.9 years, accumulating 236,000 miles and tractor-trailer combinations for 5.6 years, accumulating 280,000 miles. He holds a Class A CDL from Michigan. His driving record for the last 3 years shows no crashes and no convictions for moving violations in a CMV.

Jackie R. Frederick

Mr. Frederick, 61, has had amblyopia in his right eye since childhood. The best corrected visual acuity in his right eye is 20/70 and in his left eye, 20/20. Following an examination in 2011, his optometrist noted, ''In my opinion, his vision is sufficient to perform the driving tasks required for operating a commercial vehicle.'' Mr. Frederick reported that he has driven straight trucks for 15 years, accumulating 240,000 miles. He holds a Class A CDL from Alabama. His driving record for the last 3 years shows no crashes and no convictions for moving violations in a CMV.

Robert E. Graves

Mr. Graves, 42, has a prosthetic right eye due to a traumatic injury since age 3. The best corrected visual acuity in his left eye is 20/15. Following an examination in 2011, his optometrist noted, ''He has sufficient vision to perform the driving tasks required to operate a commercial vehicle.'' Mr. Graves reported that he has driven straight trucks for 24 years, accumulating 48,000 miles and driven tractor-trailer combinations for 22 years, accumulating 440,000 miles. He holds a Class A CDL from Nebraska. His driving record for the last 3 years shows no crashes but one conviction for speeding in a CMV. He exceeded the speed limit by 10 miles per hour

Brian P. Millard

Mr. Millard, 38, has had amblyopia in his left eye since childhood. The best corrected visual acuity in his right eye is 20/20 and in his left eye, 20/100. Following an examination in 2011, his ophthalmologist noted, ''Based on recent examinations, patient has sufficient vision to operate a commercial vehicle.'' Mr. Millard reported that he has driven straight trucks for 17 years, accumulating 1.3 million miles. He holds a Class B CDL from North Carolina. His driving record for the last 3 years shows no crashes and no convictions for moving violations in a CMV.

Steven D. Nash

Mr. Nash, 56, has had histoplasmosis in his left eye since birth. The visual acuity in his right eye is 20/20 and in his left eye, 20/450. Following an examination in 2011, his optometrist noted, ''I feel that Mr. Nash has sufficient vision to perform the driving tasks required to operate a commercial vehicle.'' Mr. Nash reported that he has driven straight trucks for 20 years, accumulating 900,000 miles. He holds a Class A CDL from Iowa. His driving

record for the last 3 years shows no crashes and no convictions for moving violations in a CMV.

Merle M. Price

Mr. Price, 56, has a prosthetic right eye due to a traumatic injury that occurred 36 years ago. The visual acuity in his left eye is 20/20. Following an examination in 2011, his optometrist noted, ''I certify that Mr. Price demonstrates that he has sufficient vision to perform the driving tasks required to operate a commercial vehicle.'' Mr. Price reported that he has driven straight trucks for 5 years, accumulating 25,000 miles and tractor-trailer combinations for 20 years, accumulating 500,000 miles. He holds a Class A CDL from Iowa. His driving record for the last 3 years shows no crashes and no convictions for moving violations in a CMV.

Terrence F. Ryan

Mr. Ryan, 49, has had refractive amblyopia in his left eye since childhood. The best corrected visual acuity in his right eye is 20/20 and in his left eye, 20/50. Following an examination in 2011, his optometrist noted, ''I certify in my medical opinion that Terrence Ryan has sufficient vision to operate a commercial vehicle.'' Mr. Ryan reported that he has driven straight trucks for 12 years, accumulating 600,000 miles and tractor-trailer combinations for 14 years, accumulating 1.1 million miles. He holds a Class A CDL from Florida. His driving record for the last 3 years shows one crash for which he was not cited, and no convictions for moving violations in a CMV.

Kirby R. Sands

Mr. Sands, 49, has had a cornea scar in his right eye, due to a traumatic injury sustained at age 9. The best corrected visual acuity in his right eye is hand motion vision and in his left eye, 20/15. Following an examination in 2011, his optometrist noted, ''My conclusion is that Kirby Sands is qualified to perform the driving tasks required to operate a commercial vehicle.'' Mr. Sands reported that he has driven straight trucks for 5 years, accumulating 128,000 miles and tractor-trailer combinations for 15 years, accumulating 1.8 million miles. He holds a Class A CDL from Iowa. His driving record for the last 3 years shows no crashes and not convictions for moving violations in a CMV.

Dennis W. Stubrich

Mr. Stubrich, 57, has had Eales' disease in his right eye since 1984. The best corrected visual acuity in his right eye is 20/60 and in his left eye, 20/20. Following an examination in 2010, his ophthalmologist noted, ''In my opinion, Mr. Stubrich's vision is sufficient to perform driving tasks required to operate commercial vehicles.'' Mr. Stubrich reported that he has driven straight trucks for 26 years, accumulating 1.7 million miles and tractor-trailer combinations for 5 years, accumulating 72,000 miles. He holds a Class A CDL from Pennsylvania. His driving record for the last 3 years shows no crashes and no convictions for moving violations in a CMV.

Stephen W. Verrette

Mr. Verrette, 44, has had cataract in his right eye due to a traumatic injury sustained at age 10. The best corrected visual acuity in his right eye is 20/150 and in his left eye, 20/20. Following an examination in 2011, his optometrist noted, ''In light of this, I feel Steve can safely perform driving tasks necessary to operate a commercial motor vehicle.'' Mr. Verrette reported that he has driven straight trucks for 25 years, accumulating 75,000 miles. He holds a Class A CDL from Michigan. His driving record for the last 3 years shows no crashes and no convictions for moving violations in a CMV.

Joseph A. Wells

Mr. Wells, 46, had a corneal transplantation in the 1990s and retinal detachment repair in 2009 due to a prior history of trauma in his right eye. The best corrected visual acuity in his right eye is 20/70 and in his left eye, 20/20. Following an examination in 2011, his ophthalmologist noted, ''I believe based on the clinical examination, he is capable of operating commercial motor vehicles without difficulty.'' Mr. Wells reported that he has driven straight trucks for 25 years, accumulating 1.2 million miles. He holds a Class A CDL from Illinois. His driving record for the last 3 years shows no crashes and no convictions for moving violations in a CMV.

Leslie H. Wylie

Mr. Wylie, 55, has loss of vision in his right eye due to a traumatic injury sustained in 1985. The best corrected visual acuity in his right eye is 20/400 and in his left eye, 20/20. Following an examination in 2010, his ophthalmologist noted, as long as he meets the criteria in regard to his visual field for operation of a commercial vehicle, I see no problems with his operation of a commercial vehicle.'' Mr. Wylie reported that he has driven straight trucks for 17 years, accumulating 3,400 miles and tractor-trailer combinations for 17 years, accumulating 3,400 miles. He holds a Class D operator's license from Idaho. His driving record for the last 3 years shows no crashes and no convictions for moving violations in a CMV.

Request for Comments

In accordance with 49 U.S.C. 31136(e) and 31315, FMCSA requests public comment from all interested persons on the exemption petitions described in this notice. The Agency will consider all comments received before the close of business July 25, 2011. Comments will be available for examination in the docket at the location listed under the **ADDRESSES** section of this notice. The Agency will file comments received after the comment closing date in the public docket, and will consider them to the extent practicable.

In addition to late comments, FMCSA will also continue to file, in the public docket, relevant information that becomes available after the comment closing date. Interested persons should monitor the public docket for new material.

Issued on: June 17, 2011.

Larry W. Minor,

Associate Administrator for Policy.

[FR Doc. 2011–15928 Filed 6–23–11; 8:45 am]

BILLING CODE 4910–EX–P

DEPARTMENT OF TRANSPORTATION

Federal Motor Carrier Safety Administration

[FMCSA Docket No. FMCSA–2011–0103]

Qualification of Drivers; Exemption Applications; Diabetes Mellitus

AGENCY: Federal Motor Carrier Safety Administration (FMCSA), DOT.

ACTION: Notice of final disposition.

SUMMARY: FMCSA announces its decision to exempt twenty-four individuals from its rule prohibiting persons with insulin-treated diabetes mellitus (ITDM) from operating commercial motor vehicles (CMVs) in interstate commerce. The exemptions will enable these individuals to operate CMVs in interstate commerce.

DATES: The exemptions are effective June 24, 2011. The exemptions expire on June 24, 2013.

FOR FURTHER INFORMATION CONTACT: Elaine M. Papp, Chief, Medical Programs, (202) 366–4001, *fmcsamedical@dot.gov,* FMCSA, Room W64–224, Department of Transportation, 1200 New Jersey

Avenue, SE., Washington, DC 20590–0001. Office hours are from 8:30 a.m. to 5 p.m., Monday through Friday, except Federal holidays.

SUPPLEMENTARY INFORMATION:

Electronic Access

You may see all the comments online through the Federal Document Management System (FDMS) at*: http://www.regulations.gov.*

Docket: For access to the docket to read background documents or comments, go to *http://www.regulations.gov* and/or Room W12–140 on the ground level of the West Building, 1200 New Jersey Avenue, SE., Washington, DC, between 9 a.m. and 5 p.m., Monday through Friday, except Federal holidays.

Privacy Act: Anyone may search the electronic form of all comments received into any of DOT's dockets by the name of the individual submitting the comment (or of the person signing the comment, if submitted on behalf of an association, business, labor union, or other entity). You may review DOT's Privacy Act Statement for the Federal Docket Management System (FDMS) published in the **Federal Register** on January 17, 2008 (73 FR 3316), or you may visit *http://edocket.access.gpo.gov/2008/pdf/E8-785.pdf.*

Background

On May 5, 2011, FMCSA published a notice of receipt of Federal diabetes exemption applications from twenty-four individuals and requested comments from the public (76 FR 25769). The public comment period closed on June 6, 2011 and no comments were received.

FMCSA has evaluated the eligibility of the twenty-four applicants and determined that granting the exemptions to these individuals would achieve a level of safety equivalent to, or greater than, the level that would be achieved by complying with the current regulation 49 CFR 391.41(b)(3).

Diabetes Mellitus and Driving Experience of the Applicants

The Agency established the current standard for diabetes in 1970 because several risk studies indicated that drivers with diabetes had a higher rate of crash involvement than the general population. The diabetes rule provides that ''A person is physically qualified to drive a commercial motor vehicle if that person has no established medical history or clinical diagnosis of diabetes mellitus currently requiring insulin for control'' (49 CFR 391.41(b)(3)).

FMCSA established its diabetes exemption program, based on the Agency's July 2000 study entitled ''A Report to Congress on the Feasibility of a Program to Qualify Individuals with Insulin-Treated Diabetes Mellitus to Operate in Interstate Commerce as Directed by the Transportation Act for the 21st Century.'' The report concluded that a safe and practicable protocol to allow some drivers with ITDM to operate CMVs is feasible.

The September 3, 2003 (68 FR 52441) **Federal Register** notice in conjunction with the November 8, 2005 (70 FR 67777) **Federal Register** notice provides the current protocol for allowing such drivers to operate CMVs in interstate commerce.

These twenty-four applicants have had ITDM over a range of 1 to 34 years. These applicants report no severe hypoglycemic reactions resulting in loss of consciousness or seizure, requiring the assistance of another person, or resulting in impaired cognitive function that occurred without warning symptoms, in the past 12 months and no recurrent (2 or more) severe hypoglycemic episodes in the past 5 years. In each case, an endocrinologist verified that the driver has demonstrated a willingness to properly monitor and manage his/her diabetes mellitus, received education related to diabetes management, and is on a stable insulin regimen. These drivers report no other disqualifying conditions, including diabetes-related complications. Each meets the vision standard at 49 CFR 391.41(b)(10).

The qualifications and medical condition of each applicant were stated and discussed in detail in the May 5, 2011, **Federal Register** notice and they will not be repeated in this notice.

Discussion of Comment

FMCSA did not receive any comments in this proceeding.

Basis for Exemption Determination

Under 49 U.S.C. 31136(e) and 31315, FMCSA may grant an exemption from the diabetes standard in 49 CFR 391.41(b)(3) if the exemption is likely to achieve an equivalent or greater level of safety than would be achieved without the exemption. The exemption allows the applicants to operate CMVs in interstate commerce.

To evaluate the effect of these exemptions on safety, FMCSA considered medical reports about the applicants' ITDM and vision, and reviewed the treating endocrinologists' medical opinion related to the ability of the driver to safely operate a CMV while using insulin.

Consequently, FMCSA finds that in each case exempting these applicants from the diabetes standard in 49 CFR 391.41(b)(3) is likely to achieve a level of safety equal to that existing without the exemption.

Conditions and Requirements

The terms and conditions of the exemption will be provided to the applicants in the exemption document and they include the following: (1) That each individual submit a quarterly monitoring checklist completed by the treating endocrinologist as well as an annual checklist with a comprehensive medical evaluation; (2) that each individual reports within 2 business days of occurrence, all episodes of severe hypoglycemia, significant complications, or inability to manage diabetes; also, any involvement in an accident or any other adverse event in a CMV or personal vehicle, whether or not it is related to an episode of hypoglycemia; (3) that each individual provide a copy of the ophthalmologist's or optometrist's report to the medical examiner at the time of the annual medical examination; and (4) that each individual provide a copy of the annual medical certification to the employer for retention in the driver's qualification file, or keep a copy in his/her driver's qualification file if he/she is self-employed. The driver must also have a copy of the certification when driving, for presentation to a duly authorized Federal, State, or local enforcement official.

Conclusion

Based upon its evaluation of the twenty-four exemption applications, FMCSA exempts, Alfonso L. Abeyta, Perfecto Aquino, James C. Ayotte, John C. Beason, Jr., Charles A. Best, Gregory E. Bichsel, II., Raymond D. Dubose, Adam Errickson, Jon M. Greiner, Gregory M. Hoyt, Robert E. Jackson, Kimm D. Jacobson, Daryl D. Jibben, Jimmy G. Lee, Jr., Daniel S. May, Gerald D. McElya, Michael L. Moore, Stacey W. Nelson, Ervin W. Ponto, Donald B. Ramaley, Bart H. Rideout, Floyd M. Tyler, Richard G. Wunderlich and Mathew E. Yeates from the ITDM standard in 49 CFR 391.41(b)(3), subject to the conditions listed under ''Conditions and Requirements'' above.

In accordance with 49 U.S.C. 31136(e) and 31315 each exemption will be valid for two years unless revoked earlier by FMCSA. The exemption will be revoked if: (1) The person fails to comply with the terms and conditions of the exemption; (2) the exemption has resulted in a lower level of safety than was maintained before it was granted; or (3) continuation of the exemption would not be consistent with the goals and

objectives of 49 U.S.C. 31136(e) and 31315. If the exemption is still effective at the end of the 2-year period, the person may apply to FMCSA for a renewal under procedures in effect at that time.

Issued on: June 15, 2011.

Larry W. Minor,

Associate Administrator for Policy.

[FR Doc. 2011–15927 Filed 6–23–11; 8:45 am]

BILLING CODE 4910–EX–P

DEPARTMENT OF TRANSPORTATION

Federal Motor Carrier Safety Administration

[Docket No. FMCSA–1999–5748; FMCSA–2000–8398; FMCSA–2005–20560; FMCSA–2006–26066; FMCSA–2007–0071; FMCSA–2007–26653; FMCSA–2007–27515; FMCSA–2008–0398; FMCSA–2009–0086]

Qualification of Drivers; Exemption Applications; Vision

AGENCY: Federal Motor Carrier Safety Administration (FMCSA), DOT.

ACTION: Notice of renewal of exemptions; request for comments.

SUMMARY: FMCSA announces its decision to renew the exemptions from the vision requirement in the Federal Motor Carrier Safety Regulations for 24 individuals. FMCSA has statutory authority to exempt individuals from the vision requirement if the exemptions granted will not compromise safety. The Agency has concluded that granting these exemption renewals will provide a level of safety that is equivalent to or greater than the level of safety maintained without the exemptions for these commercial motor vehicle (CMV) drivers.

DATES: This decision is effective July 2, 2011. Comments must be received on or before July 25, 2011.

ADDRESSES: You may submit comments bearing the Federal Docket Management System (FDMS) numbers: FMCSA–1999–5748; FMCSA–2000–8398; FMCSA–2005–20560; FMCSA–2006–26066; FMCSA–2007–0071; FMCSA–2007–26653; FMCSA–2007–27515; FMCSA–2008–0398; FMCSA–2009–0086, using any of the following methods:

- *Federal eRulemaking Portal:* Go to *http://www.regulations.gov.* Follow the on-line instructions for submitting comments.
- *Mail:* Docket Management Facility; U.S. Department of Transportation, 1200 New Jersey Avenue, SE., West Building Ground Floor, Room W12–140, Washington, DC 20590–0001.
- *Hand Delivery or Courier:* West Building Ground Floor, Room W12–140, 1200 New Jersey Avenue, SE., Washington, DC, between 9 a.m. and 5 p.m., Monday through Friday, except Federal holidays.
- *Fax:* 1–202–493–2251.

Instructions: Each submission must include the Agency name and the docket number for this notice. Note that DOT posts all comments received without change to *http://www.regulations.gov,* including any personal information included in a comment. Please see the Privacy Act heading below.

Docket: For access to the docket to read background documents or comments, go to *http://www.regulations.gov* at any time or Room W12–140 on the ground level of the West Building, 1200 New Jersey Avenue, SE., Washington, DC, between 9 a.m. and 5 p.m., Monday through Friday, except Federal holidays. The Federal Docket Management System (FDMS) is available 24 hours each day, 365 days each year. If you want acknowledgment that we received your comments, please include a self-addressed, stamped envelope or postcard or print the acknowledgement page that appears after submitting comments on-line.

Privacy Act: Anyone may search the electronic form of all comments received into any of our dockets by the name of the individual submitting the comment (or of the person signing the comment, if submitted on behalf of an association, business, labor union, *etc.*). You may review DOT's Privacy Act Statement for the FDMS published in the **Federal Register** on January 17, 2008 (73 FR 3316), or you may visit *http://edocket.access.gpo.gov/2008/pdf/E8-785.pdf.*

FOR FURTHER INFORMATION CONTACT: Elaine M. Papp, Chief, Medical Programs, (202)–366–4001, *fmcsamedical@dot.gov,* FMCSA, Department of Transportation, 1200 New Jersey Avenue, SE., Room W64–224, Washington, DC 20590–0001. Office hours are from 8:30 a.m. to 5 p.m. Monday through Friday, except Federal holidays.

SUPPLEMENTARY INFORMATION:

Background

Under 49 U.S.C. 31136(e) and 31315, FMCSA may renew an exemption from the vision requirements in 49 CFR 391.41(b)(10), which applies to drivers of CMVs in interstate commerce, for a two-year period if it finds ''such exemption would likely achieve a level of safety that is equivalent to or greater than the level that would be achieved absent such exemption.'' The procedures for requesting an exemption (including renewals) are set out in 49 CFR part 381.

Exemption Decision

This notice addresses 24 individuals who have requested renewal of their exemptions in accordance with FMCSA procedures. FMCSA has evaluated these 24 applications for renewal on their merits and decided to extend each exemption for a renewable two-year period. They are: Carl W. Adams, Michael W. Anderson, William E. Beckley, Michael R. Bradford, Richard A. Brown, Jr., John J. Caricola, Jr., William P. Caufield, Denise M. Engle, Michael A. Hildebrand, Wade M. Hillmer, Michael W. Jensen, Caleb T. Kass, Clifford E. Masink, Michael J. McGregan, Felix L. McLean, Earl R. Neugebauer, Willie E. Nichols, John P. Perez, Jeffrey W. Pike, Jr., Scott K. Richardson, Jose C. Sanchez-Sanchez, Kyle C. Shover, Charles H. Smith, Robert G. Springer.

The exemptions are extended subject to the following conditions: (1) That each individual has a physical examination every year (a) by an ophthalmologist or optometrist who attests that the vision in the better eye continues to meet the standard in 49 CFR 391.41(b)(10), and (b) by a medical examiner who attests that the individual is otherwise physically qualified under 49 CFR 391.41; (2) that each individual provides a copy of the ophthalmologist's or optometrist's report to the medical examiner at the time of the annual medical examination; and (3) that each individual provide a copy of the annual medical certification to the employer for retention in the driver's qualification file and retains a copy of the certification on his/her person while driving for presentation to a duly authorized Federal, State, or local enforcement official. Each exemption will be valid for two years unless rescinded earlier by FMCSA. The exemption will be rescinded if: (1) The person fails to comply with the terms and conditions of the exemption; (2) the exemption has resulted in a lower level of safety than was maintained before it was granted; or (3) continuation of the exemption would not be consistent with the goals and objectives of 49 U.S.C. 31136(e) and 31315.

Basis for Renewing Exemptions

Under 49 U.S.C. 31315(b)(1), an exemption may be granted for no longer than two years from its approval date and may be renewed upon application for additional two year periods. In

accordance with 49 U.S.C. 31136(e) and 31315, each of the 24 applicants has satisfied the entry conditions for obtaining an exemption from the vision requirements (64 FR 40404; 64 FR 66962; 65 FR 78256; 66 FR 16311; 67 FR 17102; 68 FR 13360; 70 FR 12265; 70 FR 14747; 70 FR 25878; 70 FR 30997; 70 FR 17504; 71 FR 63379; 72 FR 1050; 72 FR 8417; 72 FR 11426; 72 FR 21313; 72 FR 27624; 72 FR 32703; 72 FR 34062; 72 FR 36099; 73 FR 6242; 73 FR 16950; 74 FR 7097; 74 FR 8302; 74 FR 15584; 74 FR 19267; 74 FR 19270; 74 FR 20523; 74 FR 26464; 74 FR 26466; 74 FR 26471; 74 FR 28094). Each of these 24 applicants has requested renewal of the exemption and has submitted evidence showing that the vision in the better eye continues to meet the standard specified at 49 CFR 391.41(b)(10) and that the vision impairment is stable. In addition, a review of each record of safety while driving with the respective vision deficiencies over the past two years indicates each applicant continues to meet the vision exemption standards. These factors provide an adequate basis for predicting each driver's ability to continue to drive safely in interstate commerce. Therefore, FMCSA concludes that extending the exemption for each renewal applicant for a period of two years is likely to achieve a level of safety equal to that existing without the exemption.

Request for Comments

FMCSA will review comments received at any time concerning a particular driver's safety record and determine if the continuation of the exemption is consistent with the requirements at 49 U.S.C. 31136(e) and 31315. However, FMCSA requests that interested parties with specific data concerning the safety records of these drivers submit comments by July 25, 2011.

FMCSA believes that the requirements for a renewal of an exemption under 49 U.S.C. 31136(e) and 31315 can be satisfied by initially granting the renewal and then requesting and evaluating, if needed, subsequent comments submitted by interested parties. As indicated above, the Agency previously published notices of final disposition announcing its decision to exempt these 24 individuals from the vision requirement in 49 CFR 391.41(b)(10). The final decision to grant an exemption to each of these individuals was made on the merits of each case and made only after careful consideration of the comments received to its notices of applications. The notices of applications stated in detail the qualifications, experience, and medical condition of each applicant for an exemption from the vision requirements. That information is available by consulting the above cited **Federal Register** publications.

Interested parties or organizations possessing information that would otherwise show that any, or all, of these drivers are not currently achieving the statutory level of safety should immediately notify FMCSA. The Agency will evaluate any adverse evidence submitted and, if safety is being compromised or if continuation of the exemption would not be consistent with the goals and objectives of 49 U.S.C. 31136(e) and 31315, FMCSA will take immediate steps to revoke the exemption of a driver.

Issued on: June 13, 2011.

Larry W. Minor,

Associate Administrator for Policy.

[FR Doc. 2011–15926 Filed 6–23–11; 8:45 am]

BILLING CODE 4910–EX–P

DEPARTMENT OF TRANSPORTATION

Federal Transit Administration

Capital Investment Program—New Starts and Small Starts Program Funds

AGENCY: Federal Transit Administration (FTA), DOT.

ACTION: Notice.

SUMMARY: The U.S. Department of Transportation's (DOT) Federal Transit Administration (FTA) announces the apportionment of the FY 2011 Capital Investment (New Starts and Small Starts) program funds. The funds will be used for construction of new fixed guideway systems, or extensions to existing fixed guideway systems, or corridor based bus systems to promote livable communities, improve mobility by providing alternatives to automobile, and reduce the impact on the environment.

FOR FURTHER INFORMATION CONTACT: For general program information on the New Starts, contact Eric Hu, Office of Program Management, at (202) 366–0870, *e-mail: Eric.Hu@dot.gov mailto:,* for project specific issues, contact Elizabeth Day, Office of Planning and Environment, at (202) 366–5159, *e-mail: Elizabeth.Day@dot.gov.*

SUPPLEMENTARY INFORMATION: In FY 2011, $1,596,800,000 was appropriated for the Capital Investments Grant Account, which includes the New Starts and Small Starts programs. After a one percent oversight takedown, the total amount allocated for New Starts and Small Starts is $1,580,832,000. The funding is allocated to eight existing Full Funding Grant Agreement (FFGA) projects, four pending FFGA projects, six projects recommended for future FFGAs, and nine Small Starts funding recommendations. Funding is also provided to the Denali Commission Alaska and Alaska and Hawaii ferry projects authorized in law. Project allocations are shown in Table 1, which accompanies this announcement. Project identification numbers are assigned to each project and must be used in the grant application submitted through the Transportation Electronic Award Management system. Pre-award authority is granted as of February 8, 2011, the publication date of the FTA Fiscal Year 2011 Apportionments, Allocations, and Program Information notice, and projects are subject to the conditions described in that notice. Funding announced in this notice will be available for obligation until September 30, 2013.

Issued in Washington, DC, this 21st day of June, 2011.

Peter Rogoff,

Administrator.

BILLING CODE 4910–57–P

Table 1
FEDERAL TRANSIT ADMINISTRATION

FY 2011 SECTION 5309 NEW STARTS ALLOCATIONS

State	Earmark ID	Project Location and Description	Allocation
AK	D2011-NWST-001	Denali Commission	$4,990,000
AK/HI	D2011-NWST-002	Alaska/Hawaii Ferries	$14,970,000
CA	D2011-NWST-003	San Francisco, Central Subway LRT	$20,000,000
CA	D2011-NWST-004	San Francisco, Van Ness Avenue BRT	$15,000,000
CA	D2011-NWST-005	Oakland, East Bay BRT	$15,000,000
CA	D2011-NWST-006	San Bernardino, E Street Corridor sbX BRT	$42,630,000
CA	D2011-NWST-007	Riverside, Perris Valley Line	$23,490,000
CO	D2011-NWST-008	Denver, East Corridor	$40,000,000
CO	D2011-NWST-009	Denver, Gold Line	$40,000,000
CO	D2011-NWST-010	Denver, West Corridor LRT	$40,179,000
CO	D2011-NWST-011	Roaring Fork Valley, BRT Project	$24,163,000
CO	D2011-NWST-012	Fort Collins, Mason Corridor BRT	$5,450,573
CT	D2011-NWST-013	Hartford, New Britain - Hartford Busway	$45,000,000
FL	D2011-NWST-014	Orlando, Central Florida Commuter Rail Transit – Initial Operating Segment	$40,000,000
HI	D2011-NWST-015	Honolulu, High Capacity Transit Corridor Project	$55,000,000
MN	D2011-NWST-016	St. Paul-Minneapolis, Central Corridor LRT	$45,000,000
NY	D2011-NWST-017	New York, Long Island Rail Road East Side Access	$215,000,000
NY	D2011-NWST-018	New York, Second Avenue Subway Phase I	$197,182,000
NY	D2011-NWST-019	New York City, Nostrand Ave BRT	$28,398,554
TX	D2011-NWST-020	Dallas, Northwest/Southeast LRT MOS	$86,249,717
TX	D2011-NWST-021	Houston, North Corridor LRT	$75,000,000
TX	D2011-NWST-022	Houston, Southeast Corridor LRT	$75,000,000
TX	D2011-NWST-023	Austin, MetroRapid BRT	$24,229,796
UT	D2011-NWST-024	Salt Lake City, Mid Jordan LRT	$100,000,000
UT	D2011-NWST-025	Salt Lake City, Weber County to Salt Lake City Commuter Rail	$80,000,000
VA	D2011-NWST-026	Northern Virginia, Dulles Corridor Metrorail Project Extension to Wiehle Ave.	$96,000,000
WA	D2011-NWST-027	Seattle, University Link LRT Extension	$110,000,000
WA	D2011-NWST-028	King County, West Seattle BRT	$21,274,000
		Unallocated	$1,625,360
		Total 2011 Allocations	**$1,580,832,000**

[FR Doc. 2011–15912 Filed 6–23–11; 8:45 am]
BILLING CODE 4910–57–C

DEPARTMENT OF TRANSPORTATION

Federal Transit Administration

FY 2011 Discretionary Sustainability Funding Opportunity Transit Investments for Greenhouse Gas and Energy Reduction (TIGGER) Program and Clean Fuels Grant Program, Augmented With Discretionary Bus and Bus Facilities Program

AGENCY: Federal Transit Administration (FTA), DOT.

ACTION: Notice of availability of FTA environmental sustainability program funds: Solicitation of project proposals.

SUMMARY: The Federal Transit Administration (FTA) announces the availability of discretionary funds in Fiscal Year (FY) 2011 for the Transit Investments for Greenhouse Gas and Energy Reduction (TIGGER) program and Clean Fuels Grant program, augmented with Section 5309 Bus and Bus Facilities program funds. These discretionary program funds will be distributed in accordance with the mission of each program and in support of the U. S. Department of Transportation's (DOT) environmental sustainability efforts.

This notice includes priorities established by FTA for these discretionary funds, the criteria FTA will use to identify meritorious projects for funding, and describes how to apply for funding under each discretionary program. This announcement is available on the FTA Web site at: *http://www.fta.dot.gov.* FTA will announce final selections on the Web site and in the **Federal Register**. Additionally, a synopsis of each funding opportunity will be posted in the FIND module of the government-wide electronic grants Web site at *http://www.grants.gov.*

DATES: Complete proposals for both the Clean Fuels/Bus and Bus Facilities and TIGGER discretionary grant programs must be submitted by August 23, 2011. All proposals must be submitted electronically through the GRANTS.GOV APPLY function. Any agency intending to apply should initiate the process of registering on the GRANTS.GOV site immediately to ensure completion of registration before the submission deadline. Instructions for applying can be found on FTA's Web site at *http://fta.dot.gov/tigger* and *http://fta.dot.gov/cleanfuels* and in the ''FIND'' module of GRANTS.GOV.

FOR FURTHER INFORMATION CONTACT: Contact the appropriate FTA Regional Administrator (Appendix A) for proposal-specific information and issues. For general program information on the TIGGER program, contact Walter Kulyk, Office of Mobility Innovation, (202) 366–4995, e-mail: *walter.kulyk@dot.gov.* For program information on the Clean Fuels/Bus and Bus Facilities Program; contact Vanessa Williams, Office of Program Management, (202) 366–4818, e-mail: *vanessa.williams@dot.gov.* A TDD is available at 1–800–877–8339 (TDD/FIRS).

SUPPLEMENTARY INFORMATION:

Table of Contents

I. FTA Sustainability Program Overview
II. Sustainability Program Information
A. Transit Investments for Greenhouse Gas and Energy Reduction (TIGGER) Program
1. Program Purpose
2. Eligible Applicants
3. Eligible Projects
4. Cost Sharing or Matching
5. Application Content
6. Evaluation Criteria
7. Award Administration Information
B. Clean Fuels/Bus and Bus Facilities Program
1. Program Purpose
2. Eligible Applicants
3. Eligible Projects
4. Cost Sharing or Matching
5. Application Content
6. Evaluation Criteria
III. Technical Assistance
Appendix A FTA Regional Offices
Appendix B Glossary of Terms (TIGGER Program)
Appendix C Discretionary Program Timeline
Appendix D Program Matrix

I. FTA Sustainability Program Overview

A. Authority

These programs are authorized under Section 5308, 5309(b) (as amended by the Safe, Accountable, Flexible, Efficient, Transportation Equity Act: A Legacy for Users (SAFETEA–LU)) August 10, 2005, and Section 2223 of the Department of Defense and Full-Year Continuing Appropriations Act, 2011(enacted April 15, 2011).

B. Policy Priority

Among the goals of the Obama Administration is one to improve our Nation's environment and to secure its energy future. Effective provision of public transportation is a key part of this goal. The Administration believes that we must commit ourselves to an economic future in which the strength of our economy is not tied to the unpredictability of oil markets. We must make the investments in clean energy sources that will both enhance the environment through improved air quality and curb our dependence on fossil fuels, making America energy independent by:

- Breaking Dependence on Oil. Promote the next generation of vehicles and the fuels they use and provide alternate modes of transportation that minimize the use of fossil fuels.
- Producing More Energy at Home. Enhance U.S. energy supplies through responsible development of domestic renewable energy, fossil fuels, advanced biofuels and nuclear energy.
- Promoting Energy Efficiency. Promote investments in the transportation, electricity, industrial, building and agricultural sectors that reduce energy bills.

FTA advances these energy and environmental goals by funding projects that:

- Enhance the quality of public transportation services.
- Assist nonattainment and maintenance areas in achieving or maintaining the National Ambient Air Quality standards for ozone and carbon monoxide.
- Support emerging Clean Fuel and advanced propulsion technologies for transit buses and markets for those technologies.
- Reduce greenhouse gas emissions of public transportation systems.

By this notice, FTA announces the availability of at least $101.4 million in FY 2011 discretionary resources to help promote the usage and development of energy efficient technologies that reduce energy use, greenhouse gas emissions and other pollutants. Projects funded as a result of this notice will further the Department's environmental sustainability efforts. As each program has separate eligibility and program requirements, FTA encourages applicants to carefully consider which program to apply under. FTA will provide $49.9 million under the TIGGER program. This program is intended for projects of innovative and national significance with a minimum project cost of $1 million. To complement TIGGER, FTA also will award approximately $51.5 million under the Clean Fuels Grant program. FTA also intends to further our environmental sustainability goals by allowing applicants in attainment areas that are not eligible under the Clean Fuels Grant program to apply for projects which promote the use of clean fuels and fund those projects with Bus and Bus Facilities program funds as appropriate. Please refer to Appendix C for information on additional availability of FTA funds.

II. Sustainability Program Information

A. TIGGER Program

The Department of Defense and Full-Year Continuing Appropriations Act, 2011 (Pub. L. 112–10), appropriated $49.9 million for grants to public transit agencies for capital investments that will reduce the energy consumption or greenhouse gas emissions of their public transportation systems, referred to as the Transit Investments for Greenhouse Gas and Energy Reduction (TIGGER) program. In the previous two years a total of $175 million was provided for TIGGER in the American Recovery and Reinvestment Act of 2009 (ARRA) and The Transportation, Housing, and Urban Development, and Related Agencies Appropriations Act 2010 and thus awarded by FTA.

Based on lessons learned in the application, review, and implementation processes from the previous two years of the TIGGER program, FTA is altering some of the application procedures for the FY 2011-funded TIGGER program to continue to simplify the process and provide greater efficiency, documentation, and transparency. Additionally, given the availability of other FTA discretionary programs in FY 2011, such as the Clean Fuels Grant program, FTA will rate more favorably innovative technologies of national significance and other forward-looking technologies, not normally funded out of other FTA programs.

This notice announces the availability of the grant program funding, application requirements, and deadlines for submitting proposals for funding.

1. Program Purpose

There are two eligible purposes for TIGGER grants: (1) For capital investments that will assist in reducing the energy consumption of a transit system; or (2) for capital investments that will reduce greenhouse gas emissions of a public transportation system. Project proposals may be submitted under either or both categories. FTA has established a range of funding that will be considered for approval. Each submitted proposal must request a minimum of $1,000,000 and must not exceed a maximum of $15,000,000. Proposals that include projects less than $1,000,000 may be applied for if they are part of a consolidated proposal submitted by the State Department of Transportation (State DOT) or a consortium of smaller agencies working in tangent that, in total, meets or exceeds the $1,000,000 threshold. FTA may decide to provide only partial funding for certain proposals to maximize the impact of this program. Detailed budget proposals and a minimum value needed to achieve project results are expected in all proposals. FTA encourages applicants with projects that are not technologically innovative, or which do not meet these funding thresholds to apply under the Clean Fuels program which has simpler application criteria.

2. Eligible Applicants

Under TIGGER, only public transportation agencies, Federally recognized Tribes or State DOTs may apply. A public transportation agency

may apply for one or multiple projects in one proposal. Likewise, public transportation agencies working in a consortium to meet the minimum funding threshold may also submit a proposal detailing individual projects. Additionally, a State DOT may submit a consolidated proposal for multiple projects from one or more transit agencies in order to meet the $1,000,000 threshold. Consolidated proposals from either State DOTs or agency consortia must contain individual project level information, as described in Section 5 Application Content, for *each* project included in the consolidated proposal. Grant awards will be made for a particular project directly to public transportation agencies, Tribes, or State Departments of Transportation on behalf of a public transportation agency.

3. Eligible Projects

Eligible expenses must meet the following criteria: (1) The expense must be an eligible capital expense as defined under 49 U.S.C. 5302(a)(1); and (2) the project will assist in the reduction of the energy consumption of a public transportation system and/or the reduction of greenhouse gas emissions of a public transportation system.

4. Cost Sharing or Matching

The expected Federal share for TIGGER grants is 90 percent, although applicants may request a different Federal share. A proposed Federal share can be less than 90 percent, or up to 100 percent. However, applicants requesting a lower Federal share may be given a higher rating in the evaluation process, all else being equal.

5. Application Content

a. Proposal Submission Process

Project proposals must follow the submission guidelines that are provided at *http://www.fta.dot.gov/tigger.* A synopsis of this announcement will is also posted in the ''FIND'' module of the GRANTS.GOV. Mail and fax submissions will not be accepted.

Complete proposals for the TIGGER program must be submitted electronically through the GRANTS.GOV Web site by August 23, 2011. Applicants are encouraged to begin the process of registration on the GRANTS.GOV site well in advance of the submission deadline. Registration is a multi-step process, which may take several weeks to complete before an application can be submitted. In addition to the Mandatory SF424 Form that will be downloaded from GRANTS.GOV, FTA requires applicants to complete the Supplemental FTA Form to enter descriptive and data elements of individual program proposals for these discretionary programs. These supplemental forms provide guidance and a consistent format for applicants to respond to the criteria outlined in this Notice of Funding Availability (NOFA) and described in detail on the FTA Web site at *http://www.fta.dot.gov/tigger.* Applicants *must* use this Supplemental Form and attach it to their submission in GRANTS.GOV to successfully complete the application process. Within 24–48 hours after submitting an electronic application, the applicant should receive an e-mail validation message from GRANTS.GOV. The validation will state whether GRANTS.GOV found any issues with the submitted application. As an additional notification, FTA's system will notify the applicant if there are any problems with the submitted Supplemental FTA Form. If making a resubmission for any reason, include all original attachments regardless of which attachments were updated. Complete instructions on the application process can be found at *http://www.fta.dot.gov/tigger. Important:* FTA urges applicants to submit their applications at least 72 hours prior to the due date to allow time to receive the validation message and to correct any problems that may have caused a rejection notification.

b. Proposal Content

Proposals from public transit agencies may contain multiple projects. Agencies may submit multiple proposals, but each proposal must be clearly defined. Additionally, a proposal may contain multiple projects, but each project much be clearly defined as a separate project within the Supplemental Form provided on *http://fta.dot.gov/tigger.*

Proposals from State DOTs may also contain multiple projects from one or more transit agencies in order to meet the $1,000,000 threshold. Consolidated proposals must contain individual project level information, as described below, for each project included in the consolidated proposal.

Project Summary—The applicant is requested to enter summary information about the proposed project into a project Supplemental Form to be attached with the SF 424 Mandatory Form provided on GRANTS.GOV. Additional guidelines for application procedures, further instructions, and application tools will be located on FTA's Web site at *http://www.fta.dot.gov/tigger.* Information that should be considered essential for project evaluation includes, but is not limited to:

(1) Applicant Information.

This addresses basic identifying information, including:

i. Applicant name;

ii. Contact information (including contact name, address, e-mail address, phone and fax number;

iii. Description of services provided by the agency, including areas served;

iv. Congressional district(s) served by the proposed project.

v. If the project proposal includes vehicles, provide existing fleet information, such as a current rail or bus fleet management plan, if not already on file with the FTA Regional Office, and

vi. A description of the technical, legal and financial capacity of the project sponsor.

(2) Project Information.

Every proposal must:

i. Include a project management plan to be utilized to implement the proposed project.

ii. Address whether the project is to be evaluated under energy reduction or greenhouse gas reduction criteria, or both criteria;

iii. Include the project scope, including descriptions of the proposed capital investment as well as the existing system, subsystem, facility, vehicle, or component that the investment will replace or be applied to. The project scope determines where measurement of energy reductions or greenhouse gas emissions reductions will take place and must be directly related to the actual capital investment. It should be determined in a manner that permits measurement before and after the investment to determine either the energy savings or greenhouse gas reductions, or both;

iv. Include a line-item budget for the project and its total cost. For scalable projects, a scaling plan describing the minimum amount necessary for a feasible project and the energy or greenhouse gas reduction impacts of a reduced funding level;

v. State the expected useful life of the investment based on accepted FTA and industry practices;

vi. Provide a project time-line outlining steps from project development through completion, including significant milestones such as date of contract awards and dates of project implementation; and

vii. Include the proposed location of the project. For facilities and other infrastructure this means the city or county where the infrastructure will be located. For transit vehicles it means the cities or counties where transit services are likely to be provided.

(3) Project Measurement Information

i. Proposals must provide a narrative describing how the greenhouse gas and/

or energy saving estimates were calculated. Proposals also must identify the process the agency will use to determine the actual energy savings and/or greenhouse gas emission reductions realized once the investment is implemented. FTA will post on its Web site (*http://www.fta.dot.gov/tigger*) the information or other application tools that may be used to develop these calculations.

ii. Project Measurement Criteria for Energy Reduction Projects: The proposal must include:

(A) Project's Current Annual Energy Use.

(B) Project's Estimated Annual Energy Use.

(C) Project's Estimated Annual Energy Savings.

(D) Project's Total Estimated Energy Savings Over Its Useful Life.

(E) Project's Total Energy Savings as a Percentage of the Agency's Total Annual Energy Use. This can be reported as less than one percent or the proposal must include:

(A) Total Annual Energy Consumption of the Public Transportation Agency.

(B) The Project's Total Energy Savings as a Percentage of the Total Annual Energy Consumption of the Public Transportation Agency.

iii. Project Measurement Criteria for Greenhouse Gas Emission Reduction Projects: Proposals must include:

(A) Project's Current Annual Greenhouse Gas Emissions.

(B) Project's Estimated Annual Greenhouse Gas Emissions.

(C) Project's Estimated Annual Greenhouse Gas Savings.

(D) Project's Total Estimated Greenhouse Gas Savings Over the Project's Useful Life.

(4) Proposed Deviations From FTA Circular 5010.

FTA's capital program includes the introduction of new technology, through innovative and improved products, into public transportation as an eligible expense. FTA intends to apply 49 U.S.C. 53 requirements and FTA Circular 5010.1.D Grant Management Requirements issued on November 1, 2008 to this program. This Circular may be found at: *http://www.fta.dot.gov/laws/circulars/leg_reg_8640.html*. The applicant should identify any waivers to these requirements it anticipates it may need that would affect its ability to introduce new technology. However, FTA is disinclined to grant any Buy America waivers.

(5) A project proposal should address each of the evaluation criteria separately, except for geographic diversity which need not be addressed by the applicant.

c. Funding Restrictions

Only proposals from eligible recipients for eligible activities will be considered for funding (see Section II of this Notice).

6. Evaluation Criteria

Proposals will be evaluated for their ability to reduce energy consumption and/or greenhouse gas emissions of the transit agency. An applicant will be evaluated under both criteria if it provides the necessary project measurement information.

a. Evaluation Criteria for Energy Consumption Reduction Projects

FTA will evaluate proposals on total energy consumption savings projected to result from the project, and projected energy savings of the project as a percentage of the total energy usage of the public transit agency. Refer to Appendix B for definitions.

b. Evaluation Criterion for Greenhouse Gas Emission Reduction Projects

FTA will evaluate proposals based on the total amount of greenhouse gas reductions projected to result from the project.

c. Evaluation Criteria for All Projects

In addition, FTA will evaluate all proposals on the following criteria:

(1) Project Innovation.

The project identifies a unique, significant, or innovative approach to reducing energy consumption or greenhouse gas emissions. FTA encourages qualified projects that will demonstrate innovative technologies leading to operational efficiencies and other approaches to reducing energy consumption or greenhouse gas emissions. FTA will give some priority consideration to these projects if all other project evaluation criteria are comparable.

Examples of innovation include:

i. On-Board Vehicle Energy Management (energy storage, regenerative braking, fuel cells, turbines, engine auto start/stop, etc.).

ii. Electrification of Accessories (air conditioning, air compressor, power steering, etc.).

iii. Bus Design (lightweight materials, component packaging, maintainability, etc.).

iv. Rail Transit Energy Management (energy storage, regenerative braking, solar propulsion engine systems, power load-leveling, etc.)

v. Locomotive Design (energy storage, regenerative braking, fuel cells, turbines, engine auto start/stop, lightweight material, etc).

vi. Innovative Intelligent transportation systems (ITS) involving bus or rail operations such as transit signal priority, wireless engine monitoring devices, and dynamic dispatching systems.

vii. Other innovative approaches to reduce energy consumption or greenhouse gas emissions.

(2) National Applicability. The national applicability of the project as an example of energy savings or greenhouse gas reductions, including whether the project could be replicated by other transit agencies regionally or nationally and is consistent with FTA livability and environmental sustainability goals should be demonstrated.

(3) Project Readiness. FTA will evaluate the proposed timeframe of the project for timeliness and reasonableness.

(4) Project Management. The applicant demonstrates the capacity to carry out the project.

i. The applicant is in a fundable status for the FTA grant program.

ii. The applicant's project team demonstrates the technical capacity to carry out the project, including the project approach or project management plan.

iii. The applicant has the ability to collect information and demonstrate the results of the project for at least one year following project implementation.

(5) Return on Investment. This factor addresses the energy savings and/or greenhouse gas reduction relative to the total project cost, including the proposed Federal and local shares.

(6) Geographic Diversity. To provide the ability to evaluate technologies in a wide variety of conditions, FTA may select projects to ensure there is sufficient geographic diversity.

d. Review and Selection Process

Proposals first will be screened by a technical review committee. During the process, FTA may seek clarifications or corrections to some proposals to ensure adequate information is available to evaluate the proposal. After evaluating proposals based on the established criteria, FTA will publish the list of all selected projects and funding levels in the **Federal Register**.

7. Award Administration Information

a. Award

Once proposals have been reviewed and projects have been selected, successful applicants will apply for and FTA will award grant funding through FTA's Transportation Electronic Award and Management (TEAM) grant

management system. These grants will be administered and managed by FTA regional offices in accordance with the applicable Federal requirements of 49 U.S.C. Chapter 53.

Depending on award amount, FTA may require a scope and project budget reduction before a grant is submitted in TEAM.

b. Administrative and National Policy Requirements

(1) Grant Requirements

If selected, project sponsors will apply for a grant through TEAM and adhere to the customary FTA grant requirements of 49 U.S.C. Chapter 53, including those identified in FTA Circular 5010.1D and the FTA Master Agreement, unless otherwise specified in the grant agreement. Technical assistance regarding these requirements is available from the corresponding FTA regional office.

Applicants must sign and submit current Certifications and Assurances before receiving a grant. If the applicant has already submitted the annual Certifications and Assurances in TEAM, they do not need to be resubmitted. The Applicant assures that it will comply with all applicable Federal statutes, regulations, executive orders, FTA circulars, and other Federal administrative requirements in carrying out any project supported by the FTA grant. The Applicant acknowledges that it is under a continuing obligation to comply with the terms and conditions of the grant agreement issued for its project with FTA. The Applicant understands that Federal laws, regulations, policies, and administrative practices might be modified from time to time and may affect the implementation of the project. The Applicant agrees that the most recent Federal requirements will apply to the project, unless FTA issues a written determination otherwise.

(2) Planning

Applicants are encouraged to notify the appropriate State DOT and Metropolitan Planning Organization (MPO) in areas likely to be served by the project funds made available under this program. Incorporation of funded projects in the long-range plans and transportation improvement programs of States and metropolitan areas is required of all funded projects. FTA cannot obligate grant funds unless the project is contained in a Federally approved State Transportation Improvement Plan (STIP).

Similarly, all environmental requirements must be complete before FTA can obligate and award a grant in TEAM.

c. Reporting Requirements

FTA reporting requirements include standard reporting requirements identified in FTA Circular 5010.1D, and the Master Grant Agreement. In addition, *the TIGGER program has additional reporting requirements.* A recipient of TIGGER funds must report on an annual basis:

(1) Actual annual energy consumed within the project scope attributable to the investment for energy consumption reduction projects;

(2) Actual greenhouse gas emissions within the project scope attributable to the investment for greenhouse gas reduction projects; and

(3) Actual annual reductions or increases in operating costs attributable to the investment for all projects.

B. Clean Fuels/Bus and Bus Facilities Program

The Clean Fuels Grant program was first established as the Clean Fuels Formula Grant program in Section 3008 of the Transportation Equity Act for the 21st Century, Public Law 105–178, June 9, 1998 (now codified at 49 U.S.C. Sec. 5308). The program was developed to assist non-attainment or maintenance areas in achieving or maintaining the National Ambient Air Quality Standards for ozone and carbon monoxide (CO). Additionally, the program supported emerging clean fuel and advanced propulsion technologies for transit buses and markets for those technologies. FY 2011 unallocated funding provides $51.5 million dollars in discretionary Clean Fuels Grant program resources. Additionally, FTA is expanding the eligible applicant pool and may fund projects that meet the Clean Fuels Grant program objectives in attainment areas using a portion of discretionary Bus and Bus Facilities program resources that are available.

1. Program Purpose

The Clean Fuels/Bus and Bus Facilities program has a two-fold purpose. First, the Clean Fuels Grant program was developed to assist nonattainment and maintenance areas in achieving or maintaining the National Ambient Air Quality Standards for ozone and CO. The second program purpose is to support emerging clean fuel and advanced propulsion technologies for transit buses and markets for those technologies.

2. Eligible Applicants

Eligible applicants under the FY 2011 Clean Fuels Grant program are:

a. Designated recipients in maintenance or non-attainment areas for ozone or CO, which are entities designated to receive Federal urbanized formula funds under 49 U.S.C. 5307.

b. FTA will also accept applications from direct recipients, tribes, and State Departments of Transportation in attainment areas.

3. Eligible Projects

Section 5308 grants authority to the Secretary to make grants under this section to assist recipients to finance eligible projects such as the following: (1) Purchasing or leasing clean fuel buses, including buses that employ a lightweight composite primary structure and vans for use in revenue service. The purchase or lease of non-revenue vehicles is not an eligible project; (2) Constructing or leasing clean fuel bus facilities or electrical recharging facilities and related equipment; (3) Projects relating to clean fuel, biodiesel, hybrid electric, or zero emissions technology buses that exhibit equivalent or superior emissions reductions to existing clean fuel or hybrid electric technologies.

Funds made available under this program cannot be used to fund operating expenses or preventive maintenance. The purchase or lease of non-revenue vehicles is not an eligible project. Funds made available under this program cannot be used to reimburse projects that have incurred prior eligible expenses without a Letter of No Prejudice (LONP) issued by FTA for the project before the costs are incurred.

4. Cost Sharing or Matching

For projects awarded funding, costs will be shared as follows:

(1) Vehicles—90 percent FTA/10 percent local contribution for the *net incremental* cost of the *clean fuels* component (not the whole vehicle). For administrative simplicity, FTA allows recipients to apply an 83 percent Federal share for the whole vehicle. The 83 percent share is a blended figure representing 80 percent of the vehicle and 90 percent of the vehicle-related equipment to be acquired in compliance with the Clean Air Act (CAA).

(2) Facilities—The 83 percent Federal share does *not* apply to facilities, for which the costs are more variable. The Federal share is 90 percent of the cost of the CAA elements of the facility.

(3) The FY 2011 Appropriations Act allows a 90 percent Federal share for the total cost of a biodiesel bus.

(4) The FY 2011 Appropriations Act allows a 90 percent Federal share for the net capital cost of factory installed hybrid electric propulsion systems and any equipment related to such a system. For administrative simplicity, FTA

allows recipients to compute the Federal share at 83 percent for eligible vehicle purchases.

(5) FTA will not approve deferred local share.

5. Application Content

a. Proposal Submission Process

(1) Project proposals must be submitted electronically through *http://www.grants.gov* and a synopsis of this announcement will be available in the ''FIND'' module. The Mandatory SF424 Form must be completed. Use the Supplemental FTA form (Applicant and Proposal Profile) to address proposal content and evaluation criteria specified in this notice. Please refer to the ''Dates'' section in this notice for more information on application instructions.

Complete proposals for the Clean Fuels program must be submitted electronically through the GRANTS.GOV Web site by August 23, 2011. Applicants are encouraged to begin the process of registration on the GRANTS.GOV site well in advance of the submission deadline. Registration is a multi-step process, which may take several weeks to complete before an application can be submitted. In addition to the Mandatory SF424 Form that will be downloaded from GRANTS.GOV, FTA requires applicants to complete the Supplemental FTA Form to enter descriptive and data elements of individual program proposals for these discretionary programs. These supplemental forms provide guidance and a consistent format for applicants to respond to the criteria outlined in this NOFA and described in detail on the FTA Web site at *http://www.fta.dot.gov/cleanfuels.* Applicants *must* use this Supplemental Form and attach it to their submission in GRANTS.GOV to successfully complete the application process. Within 24–48 hours after submitting an electronic application, the applicant should receive an e-mail validation message from GRANTS.GOV. The validation will state whether GRANTS.GOV found any issues with the submitted application. As an additional notification, FTA's system will notify the applicant if there are any problems with the submitted Supplemental FTA Form. If making a resubmission for any reason, include all original attachments regardless of which attachments were updated. Complete instructions on the application process can be found at *http://www.fta.dot.gov/cleanfuels. Important:* FTA urges applicants to submit their applications at least 72 hours prior to the due date to allow time to receive the validation message and to correct any problems that may have caused a rejection notification.

(2) Applicants can only apply for funds currently available for allocation. However, an applicant may propose a project that would expend money over multiple years. The project, however, should be ready to implement and should be completed in a reasonable period of time. In sum, the period of performance of the award is separate from the year that funds are awarded. Funds allocated under this program will remain for obligation available during the FY year selections are announced awarded plus two additional years.

b. Proposal Content

(1) Applicant Information

This addresses basic identifying information, including:

i. Proposer's name,

ii. Applicant eligibility, whether the applicant's area is attainment, non-attainment, or maintenance for ozone or CO,

iii. Description of services provided by the agency, including areas served.

(2) Eligibility Information

Every proposal must:

i. Describe the project to be funded and include with the proposal any necessary supporting documentation. Example: Information on the age of the current fleet, MPO concurrence letters, ridership information.

6. Evaluation Criteria for Clean Fuels Grant Program

a. Project Evaluation Criteria

Projects will be evaluated according to the following criteria:

(1) Planning and prioritization at local/regional level

i. Project is consistent with the transit priorities identified in the long range plan and/or contingency/illustrative projects. The project could not be included in the financially constrained Transportation Improvement Plan (TIP)/STIP due to lack of funding (if selected, project must be in federally approved STIP before grant award).

ii. Local support is demonstrated by availability of local match for this and/or related projects and letters of support.

iii. In an area with more than one transit operator, the application demonstrates coordination with and support of other transit operators, or other related projects within the applicant's MPO or the geographic region within which the proposed project will operate.

(2) The project is ready to implement.

i. Any required environmental work has been initiated for construction projects requiring an Environmental Assessment (EA).

ii. Implementation plans are ready, including initial design of facilities projects.

iii. TIP/STIP can be amended (evidenced by MPO/State endorsement).

iv. Project can be obligated and begin implementation quickly, if selected.

(3) The applicants demonstrate the technical, legal, and financial capacity to carry out the project. This criterion refers to implementation of the particular project proposed.

i. The applicant has the technical capacity to administer the project

ii. The acquisition is consistent with the bus fleet management plan

iii. There are no outstanding legal, technical, or financial issues with the grantee that would make this a high-risk project.

iv. Source of local match is identified and is available for prompt project implementation if selected (no deferred local share will be allowed).

(4) Demonstrated Need

i. Project represents a one-time or periodic need that cannot reasonably be funded from formula allocations or State and/or local revenues.

ii. Other Federal funds have not been made available for this project.

iii. The project will have a positive impact on air quality.

iv. The project is consistent with the applicant's bus fleet management plan.

v. The project is a transportation control measure in an approved State Implementation Plan (if applicable).

(5) The applicant demonstrates the benefits of the proposed project in reducing transportation related pollutants.

(6) The proposed project supports emerging clean fuels technologies or advanced technologies for transit buses.

(7) Geographic Diversity. To provide the ability to evaluate technologies in a wide variety of conditions, FTA may select projects to ensure there is sufficient geographic diversity.

(8) Budget Information

i. Provide a line-item budget for the project and its total cost.

ii. Provide the Federal amount requested for each purpose for which funds are sought.

iii. Document matching funds, including amount and source of the match.

iv. Provide project time-line, including significant milestones such as date or contract for purchase of vehicle(s), actual or expected delivery date of vehicles and contract award and completion of facility improvements.

v. Congressional district(s): Place of performance of the proposed project.

c. Funding Restrictions

Only proposals from eligible recipients for eligible activities will be considered for funding. Due to funding limitations, applicants that are selected for funding may receive less than the amount requested.

III. Technical Assistance

FTA will post answers to commonly asked questions about the TIGGER program as well as provide information to assist in calculations at *http://www.fta.dot.gov/tigger.* Commonly asked questions about the FY 2011 Clean Fuels Grant program can be found at *http://www.fta.dot.gov/funding/grants/grants_financing_3560.html.* Technical assistance regarding these requirements is available from each FTA regional office listed in Appendix A. The regional offices will contact those applicants selected for funding regarding grants and reporting requirements and will provide assistance in preparing the documentation necessary for the grant award.

Contact the appropriate FTA Regional or Metropolitan Office for application-specific information and issues. For general TIGGER program information, contact Walter Kulyk, Office of Mobility Innovation, (202) 366–4995, e-mail: *walter.kulyk@dot.gov.*

For program information on the Clean Fuels/Bus and Bus Facilities Program; contact Vanessa Williams, Office of Program Management, (202) 366–4818, e-mail: *Vanessa.williams@dot.gov.* A TDD is available at 1–800–877–8339 (TDD/FIRS).

Issued in Washington, DC, this 21st day of June, 2011.

Peter Rogoff,

Administrator

Appendix A

FTA Regional and Metropolitan Offices

Mary Beth Mello, Regional Administrator, Region 1—Boston, Kendall Square, 55 Broadway, Suite 920, Cambridge, MA 02142–1093, Tel. 617–494–2055.

States served: Connecticut, Maine, Massachusetts, New Hampshire, Rhode Island, and Vermont.

Brigid Hynes-Cherin, Regional Administrator, Region 2—New York, One Bowling Green, Room 429, New York, NY 10004–1415, Tel. 212–668–2170.

States served: New Jersey, New York.

New York Metropolitan Office, Region 2—New York, One Bowling Green, Room 428, New York, NY 10004–1415, Tel. 212–668–2202.

Letitia Thompson, Regional Administrator, Region 3—Philadelphia, 1760 Market Street, Suite 500, Philadelphia, PA 19103–4124, Tel. 215–656–7100.

States served: Delaware, Maryland, Pennsylvania, Virginia, West Virginia, and District of Columbia.

Philadelphia Metropolitan Office, Region 3—Philadelphia, 1760 Market Street, Suite 500, Philadelphia, PA 19103–4124, Tel. 215–656–7070.

Washington, D.C. Metropolitan Office, 1990 K Street, NW, Room 510, Washington, DC 20006, Tel. 202–219–3562.

Yvette Taylor, Regional Administrator, Region 4—Atlanta, 230 Peachtree Street, NW Suite 800, Atlanta, GA 30303, Tel. 404–865–5600.

States served: Alabama, Florida, Georgia, Kentucky, Mississippi, North, Carolina, Puerto Rico, South Carolina, Tennessee, and Virgin Islands.

Marisol Simon, Regional Administrator, Region 5—Chicago, 200 West Adams Street, Suite 320, Chicago, IL 60606, Tel. 312–353–2789.

States served: Illinois, Indiana, Michigan, Minnesota, Ohio, and Wisconsin.

Chicago Metropolitan Office, Region 5—Chicago, 200 West Adams Street, Suite 320, Chicago, IL 60606, Tel. 312–353–2789.

Robert C. Patrick, Regional Administrator, Region 6—Ft. Worth, 819 Taylor Street, Room 8A36, Ft. Worth, TX 76102, Tel. 817–978–0550.

States served: Arkansas, Louisiana, Oklahoma, New Mexico and Texas.

Mokhtee Ahmad, Regional Administrator, Region 7—Kansas City, MO, 901 Locust Street, Room 404, Kansas City, MO 64106, Tel. 816–329–3920.

States served: Iowa, Kansas, Missouri, and Nebraska.

Terry Rosapep, Regional Administrator, Region 8—Denver, 12300 West Dakota Ave., Suite 310, Lakewood, CO 80228–2583, Tel. 720–963–3300.

States served: Colorado, Montana, North Dakota, South Dakota, Utah, and, Wyoming.

Leslie T. Rogers, Regional Administrator, Region 9—San Francisco, 201 Mission Street, Room 1650, San Francisco, CA 94105–1926, Tel. 415–744–3133.

States served: American Samoa, Arizona, California, Guam, Hawaii, Nevada, and the Northern Mariana, Islands.

Los Angeles Metropolitan Office, Region 9—Los Angeles, 888 S. Figueroa Street, Suite 1850, Los Angeles, CA 90017–1850, Tel. 213–202–3952.

Rick Krochalis, Regional Administrator, Region 10—Seattle, Jackson Federal Building, 915 Second Avenue, Suite 3142, Seattle, WA 98174–1002, Tel. 206–220–7954.

States served: Alaska, Idaho, Oregon, and Washington.

Appendix B

Tigger Program Glossary of Terms

Energy Use of the Public Transportation System is the sum of the lower (net) heating value of fuels purchased directly by the public transportation system plus electricity purchased directly by the public transportation system. It includes energy used to perform both revenue and non revenue operations directly operated by the agency, but not energy used by purchased services. It includes fuels used by an agency to generate energy, but not energy generated by an agency. As an example, an applicant would count the lower heating value of the diesel fuel used to operate a diesel generator by an agency but not the electricity produced by the generator. Energy produced on-site using solar or wind power is also not counted as part of consumption.

Expected Useful Life is the expected lifetime of project property, or the acceptable period of use in service, based on standard industry practices such as those defined in FTA Circular 9300.1B. If a useful life is claimed that differs from standard industry practices, or for which no standard practice exists, the assumed useful life of a project should be justified using appropriate citations or well-documented assumptions and reasoning.

Greenhouse Gases are gases that trap heat in the atmosphere expressed in Carbon Dioxide ($C0_2$)-equivalent mass. The principal greenhouse gases that enter the atmosphere because of human activities are: Carbon Dioxide (CO_2); Methane (CH_4); Nitrous Oxide (N_2O); and Fluorinated Gases (Hydrofluorocarbons, perfluorocarbons, and sulfur hexafluoride).

Greenhouse Gas Emissions of the Public Transportation Agency are greenhouse gas emissions from public transportation systems vehicles or facilities, otherwise known as direct emissions. It does not include indirect emissions (*e.g.,* from third-party power plants) or displaced emissions (*e.g.,*

emissions from manufacturing transit equipment, waste disposal, emissions released by upstream processes prior to purchase of the fuel or electricity by the transit agency, etc.).

Project is the proposed capital investment as well as the existing system, subsystem, facility, vehicle, or component that the investment will replace or be applied to. The project scope determines where measurement of energy reductions or emissions reductions will take place and must be directly related to the actual capital investment.

Total Project Energy Savings is the estimated annual project energy savings multiplied by the expected useful life of the investment.

Total Project Greenhouse Gas Emission Reductions is the estimated annual project greenhouse gas emission reductions multiplied by the expected useful life of the investment.

BILLING CODE 4910–57–P

APPENDIX C

FY 2011 Discretionary Programs Schedule

Initiative	Funding Availability	NOFA Publication Target	Application Deadline
SGR Initiative (Bus)	**$750,000,000**	**6/24/2011**	**7/29/2011**
Livability Expansion Initiative	**$175,000,000**	**6/24/2011**	**7/29/2011**
Alternatives Analysis	$25,000,000		
Bus & Bus Facilities	$150,000,000		
Sustainability Initiative	**$101,400,000**	**6/24/2011**	**8/23/2011**
Clean Fuels Bus Program	$51,500,000		
TIGGER III	$49,900,000		
Other Programs	**$50,640,500**		
Paul S. Sarbanes Transit in Parks	$26,765,500	3/10/2011	5/9/2011
Tribal Transit	$15,075,000	7/25/2011	9/26/2011
Over-the-Road-Bus	$8,800,000	7/11/2011	9/12/2011

APPENDIX D

FEDERAL TRANSIT ADMINISTRATION - PROGRAM MATRIX

Program	Transit Investments for Greenhouse Gas and Energy Reduction (TIGGER)	Clean Fuels Grant Program	Bus and Bus Facilities Program
Program Purpose	Provide funding for capital investments that assist in reducing the energy consumption of a public transportation system and/or for capital investments that will reduce greenhouse gas emissions of a public transportation system.	Assist nonattainment and maintenance areas in achieving or maintaining the National Ambient Air Quality Standards for ozone and CO and to support emerging clean fuel and advanced propulsion technologies for transit buses and markets for those technologies.	As a part of FTA's sustainability efforts, the program is consistent with the Clean Fuels Grant program, although funds may be used in attainment areas.
Amount Available	$49.9 million	$51.1 million	Undetermined
Eligible Applicants	Eligible applicants are public transportation agencies, Federally recognized Tribes, or State Departments of Transportation that provide public transportation.	Eligible applicants are designated recipients, which are entities designated to receive Federal urbanized formula funds under 49 U.S.C. 5307. Applicants must be in areas that are maintenance or non-attainment for ozone or CO.	As a part of FTA's sustainability efforts, eligible applicants are tribes in rural areas, State Departments of Transportations and direct recipients in attainment areas.
Eligible Activities	(1) An eligible capital expense as defined under 49 USC 5302(a)(1), and (2) The project will assist in the reduction of the energy consumption of a public transportation system and/or the reduction of greenhouse gas emissions of a public transportation system.	1) Purchasing or leasing clean fuel buses, including buses that employ a lightweight composite primary structure and vans for use in revenue service. The purchase or lease of non-revenue vehicles is not an eligible project. (2) Constructing or leasing clean fuel bus facilities or electrical recharging facilities and related equipment. (3) Projects relating to clean fuel, biodiesel, hybrid electric, or zero emissions technology buses that exhibit equivalent or superior emissions reductions to existing clean fuel or hybrid electric technologies.	As part of FTA's sustainability efforts, eligible activities are those consistent with the Clean Fuels Grant program.
Minimum and Maximum Award	$1 million minimum/$15 million maximum, State DOTs or a consortium of smaller agencies working in tangent may submit a consolidated proposal to meet the $1 million threshold. Final grant awards by FTA may be less than $1 million.	Not Applicable	

APPENDIX D

Program	Transit Investments for Greenhouse Gas and Energy Reduction (TIGGER)	Clean Fuels Grant Program	Bus and Bus Facilities Program
Cost Sharing or Matching	The expected Federal share for TIGGER grants is 80 percent, although applicants may request up to 100 percent. **Note:** Applicants requesting a lower Federal share may be given a higher score in the evaluation process, all else being equal.	• Vehicles - 90 percent FTA/10 percent local contribution for the net incremental cost of the clean fuels component (not the whole vehicle). For administrative simplicity, FTA allows recipients to apply a 83 percent Federal share for the whole vehicle. The 83 percent for eligible vehicle purchases. The 83 percent share is a blended figure representing 80 percent of the vehicle and 90 percent of the vehicle-related equipment to be acquired in compliance with the Clean Air Act. • Facilities - The 83 percent Federal share does not apply to facilities, for which the costs are more variable. The eligibility of facility-related cost elements at the 90 percent share will be reviewed on a case-by-case basis as part of the grant application process. • The FY 2011 Appropriations Act allows a 90 percent Federal share for the total cost of a biodiesel bus. • The FY 2011 Appropriations Act also allows a 90 percent Federal share for the net capital cost of factory installed hybrid electric propulsion systems and any equipment related to such a system. For administrative simplicity, FTA allows recipients to compute the Federal share at 83 percent for eligible vehicle purchases. • FTA will not approve deferred local share.	• 80 percent FTA/20 percent local contribution for the net capital project cost, unless the grant recipient requests a lower percentage. • The Federal share may exceed 80 percent for certain projects related to the Americans with Disabilities Act (ADA) and the Clean Air Act (CAA) as follows: ADA - The Federal share is 90 percent for the cost of vehicle-related equipment or facilities attributable to compliance with the ADA of 1990 and CAA - The Federal share is 90 percent for the cost of vehicle related equipment or facilities (including clean-fuel or alternative-fuel vehicle related equipment or facilities) attributable to compliance with the CAA. FTA allows recipients to compute the Federal share at 83 percent for eligible vehicle purchases. For administrative simplicity, FTA allows recipients to compute the Federal share at 83 percent for eligible ADA and CAA vehicle purchases. • The FY 2010 Appropriations Act allows a 90 percent Federal share for the total cost of a biodiesel bus. • The FY 2010 Appropriations Act also allows a 90 percent Federal share for the net capital cost of factory installed or retrofitted hybrid electric propulsion systems and any e-Aliquipment related to such a system. For administrative simplicity, FTA allows recipients to compute the Federal share at 83 percent for eligible vehicle purchases. • FTA will not approve deferred local share.
Application Procedures	Go to: www.fta.dot.gov/tigger and www.grants.gov	Go to: www.fta.dot.gov/cleanfuels and www.grants.gov (note: the Clean Fuels Grant and Bus and Bus Facilities programs will be listed under one announcement.)	
Application Deadline	60 days from the date of this notice	60 days from the date of this notice	

[FR Doc. 2011–15913 Filed 6–23–11; 8:45 am]

BILLING CODE 4910–57–C

DEPARTMENT OF TRANSPORTATION

Federal Transit Administration

Discretionary Bus and Bus Facilities Program

AGENCY: Federal Transit Administration (FTA), DOT.

ACTION: Notice of availability of FTA state of good repair bus and bus facilities initiative funds: Solicitation of project proposals.

SUMMARY: The Federal Transit Administration (FTA) announces the availability of discretionary Section 5309 Bus and Bus Facilities grant funds in support of its ''State of Good Repair'' initiative. The State of Good Repair (SGR) Bus initiative will be funded with up to $750 million in unallocated Fiscal Year (FY) 2011 discretionary Bus and Bus Facilities Program funds, authorized by 49 U.S.C. 5309(b) of the Safe, Accountable, Flexible, Efficient, Transportation Equity Act: A Legacy For Users (SAFETEA–LU), Public Law 109–59, August 10, 2005. FTA may use additional Bus and Bus Facilities program funding that becomes available in the future to further support this initiative.

The SGR Bus initiative will make funds available to public transit providers to finance capital projects to replace, rehabilitate, and purchase buses and related equipment and to construct/rehabilitate bus-related facilities, including programs of bus and bus-related projects which may include assistance to subrecipients that are public agencies, private companies engaged in public transportation, or private non-profit organizations. This notice includes priorities established by FTA for these discretionary funds, the criteria FTA will use to identify meritorious projects for funding, and describes how to apply.

This announcement is available on the FTA Web site at: *http://www.fta.dot.gov.* FTA will announce final selections on the Web site and in the **Federal Register** notice. A synopsis of this announcement will be posted in the FIND module of the government-wide electronic grants Web site at *http://www.grants.gov.* See Appendix B of this notice for information related to other discretionary program opportunities available in FY 2011.

DATES: Complete proposals for the SGR Bus initiative must be submitted by July 29, 2011. All proposals must be submitted electronically through the GRANTS.GOV APPLY function. In order to apply through GRANTS.GOV, proposers should initiate the process of registering on the GRANTS.GOV site immediately to ensure completion of registration before the deadline for submission.

FOR FURTHER INFORMATION: Contact the appropriate FTA Regional Administrator (see Appendix A) for proposal-specific information and issues. For information on the SGR Bus initiative, contact Kimberly Sledge, Office of Program Management, (202) 366–2053, email: *kimberly.sledge@dot.gov.* A TDD is available at 1–800–877–8339 (TDD/FIRS).

SUPPLEMENTARY INFORMATION:

Table of Contents

I. Funding Opportunity Description
II. Award Information
III. Eligibility Information
IV. Proposal Submission Information
V. Proposal Review, Selection, and Notification
VI. Award Administration
Appendix A: FTA Regional Contacts
Appendix B: FY 2011 Discretionary Programs Schedule

I. Funding Opportunity Description

A. Authority

The bus and bus facilities program is authorized under 49 U.S.C. 5309(b), as amended by Section 3011 of SAFETEA–LU:

''The Secretary may make grants under this section to assist State and local governmental authorities in financing capital projects * * * to replace, rehabilitate, and purchase buses and related equipment and to construct bus-related facilities, including programs of bus and bus-related projects for assistance to subrecipients that are public agencies, private companies engaged in public transportation, or private non-profit organizations.''

B. Background

Maintaining the nation's public transportation fleet, infrastructure, and equipment in a state of good repair is essential to providing reliable, high-quality, and safe transit services to the tens of millions of Americans who depend on it daily. Transit not only provides mobility options for the American public, but contributes to the livability of our nation's communities and to environmental and energy sustainability. However, given recent limitations in State and local resources and the need to meet projected growth in demand for transit service, many local transit agencies are finding it difficult to meet their basic re-investment needs. FTA's June 2010 National State of Good Repair Assessment Study (National SGR Study) estimated a combined $77.7 billion repair and replacement backlog in our nation's bus and rail systems.

The state of repair of transit infrastructure is an important issue for both large and small systems across the country. FTA's National SGR Study indicates that roughly one-third of the nation's transit assets are in either marginal or poor condition, implying that these assets are near or have already exceeded their expected useful life. While most of the $77.7 billion backlog can be attributed to rail, more than 40 percent of the nation's buses are also in poor to marginal condition. It also estimates that an annual average of $14.4 billion in normal replacement expenditures by all levels of government nationwide would be required to keep the backlog from getting larger.

Recognizing growing investment needs and the large backlog of transit assets needing repair or replacement, the FTA proposed a $10.7 billion Bus and Rail State of Good Repair formula program in the President's FY 2012 budget. In advance of the implementation of this program, this notice makes available up to $750 million in FY 2011 Section 5309 bus and bus discretionary program resources for a ''State of Good Repair Bus'' (SGR Bus) grant initiative.

C. Program Purpose

Improving and maintaining America's buses and bus facilities so that the nation's public transportation systems are in good physical condition and successfully accomplish their performance objectives is a key strategic goal of the Department of Transportation (DOT) and FTA. The SGR Bus initiative is intended to contribute to the improvement of the condition of transit capital assets by providing financial assistance for recapitalization of buses and bus facilities. As part of the program, FTA will prioritize the replacement and rehabilitation of intermodal facilities that support the connection of bus service with multiple modes of transportation such as: rail, ferry, intercity bus and private transportation providers. In order to be eligible for funding, intermodal facilities must have adjacent connectivity with bus service. In addition, FTA will prioritize funding for the development and implementation of new, or improvement of existing, transit asset management systems. Transportation asset management is a strategic and systematic process of operating, maintaining, improving, and expanding physical assets effectively throughout their life cycle. Successful systems focus on good business and engineering policy, practices and procedures for resource allocation and utilization with the objective of better decision-making based upon quality information and well defined objectives.

II. Award Information

Federal transit funds are available to State or local governmental authorities as recipients and other public transportation providers as subrecipients. There is no floor or upper limit for any single grant under this program; however, FTA intends to fund as many meritorious projects as possible. In addition, FTA will take into consideration the geographic diversity of its award decisions.

Consistent with 49 U.S.C. 5309(m)(8), the Secretary shall consider the age and condition of buses, bus fleets, bus-related facilities and equipment of applicants in its award of State of Good Repair Bus grants.

III. Eligibility Information

A. Eligible Proposers

Eligible proposers and eventual grant applicants under this initiative are Direct Recipients under the Section 5307 Urbanized Area Formula program, States, and Indian Tribes. Proposals for funding eligible projects in rural (nonurbanized) areas must be submitted as part of a consolidated State proposal with the exception of nonurbanized projects to Indian Tribes. Tribes, States, and Direct Recipients may also submit consolidated proposals for projects in urbanized areas.

Proposals shall contain projects to be implemented by the Recipient or its subrecipients. Eligible subrecipients include public agencies, private non-profit organizations, and private providers engaged in public transportation.

B. Eligible Expenses

SAFETEA–LU grants authority to the Secretary to make grants to assist State and local governmental authorities in financing capital projects to replace, rehabilitate, and purchase buses and related equipment and to construct or rehabilitate bus-related facilities, including programs of bus and bus-related projects for assistance to subrecipients that are public agencies, private companies engaged in public transportation, or private non-profit organizations.

Projects eligible for funding under the SGR Bus initiative are capital projects such as: Purchase, replacement, or rehabilitation of, buses and vans and related equipment (including Intelligent Transportation Systems (ITS), fare equipment, communication devices that are FCC mandatory narrow-banding compliant); replacement or the modernization of bus maintenance and revenue service (passenger) facilities; replacement or modernization of intermodal facilities; and the development and implementation of transit asset management systems, that address the objectives identified in the Program Purpose subsection above.

C. Cost Sharing

Costs will be shared at the following ratio: 80 percent FTA/20 percent local contribution. FTA will not approve deferred local share requests under this program. The Federal share may exceed 80 percent for certain projects related to the Americans with Disabilities Act (ADA) and the Clean Air Act (CAA) as follows: ADA—The Federal share is 90 percent for the cost of vehicle-related equipment or facilities attributable to compliance with the ADA of 1990 (42 U.S.C. 12101 *et seq*); CAA—The Federal share is 90 percent for the cost of vehicle related equipment or facilities (including clean-fuel or alternative-fuel vehicle related equipment or facilities) attributable to compliance with the CAA (42 U.S.C. 7401 *et seq*). For administrative simplicity, FTA allows recipients to compute the Federal share

at 83 percent for eligible ADA and CAA vehicle purchases. The 83 percent Federal share does not apply to facilities. The award recipient must itemize the cost of specific, discrete, facility-related items being purchased to be in compliance with the ADA or the CAA. The Federal share is 90 percent of the cost for these itemized elements.

A Federal share of 90 percent may also be applied to projects to provide access for bicycles to public transportation facilities, to provide shelters and parking facilities for bicycles in or around public transportation facilities, or to install equipment for transporting bicycles on public transportation vehicles.

The FY 2011 Appropriations Act allows a 90 percent Federal share for the total cost of a biodiesel bus. The Act also allows a 90 percent Federal share for the net capital cost of factory installed or retrofitted hybrid electric propulsion systems and any equipment related to such a system. For administrative simplicity, FTA allows recipients to compute the Federal share at 83 percent for eligible vehicle purchases.

IV. Proposal Submission Information

A. Proposal Submission Process

Project proposals must be submitted electronically through *http://www.grants.gov.* Mail and fax submissions will not be accepted except for supplemental information that cannot be sent electronically.

B. Proposal Content

1. Proposal Information

Proposals should provide basic sponsor identifying information, including:

a. Proposer's name and FTA recipient ID number.

b. Contact information for notification of project selection (including contact name, title, address, congressional district, email, fax and phone number).

c. A general description of services provided by the agency including ridership, fleet size, areas served, *etc.*

d. A description of the agency's technical, legal, and financial capacity to implement the proposed project. Some of this information is included in Standard Form 424 when applying through GRANTS.GOV.

2. Project Information

Every proposal must:

a. Describe concisely, but completely, the project scope to be funded. As FTA may elect to only partially fund some project proposals (see below), the scope should be ''scalable'' with specific components of independent utility clearly identified.

b. Address each of the evaluation criteria separately, demonstrating how the project responds to each criterion.

c. Provide a line-item budget for the total project, with enough detail to describe the various key components of the project. As FTA may elect to only partially fund some project proposals, the budget should provide for the minimum amount necessary to fund specific project components of independent utility.

d. Provide the Federal amount requested.

e. Document the matching funds, including amount and source of the match, demonstrating strong local or private sector financial participation in the project.

f. Provide support documentation, including financial statements, bond-ratings, and documents supporting the commitment of non-federal funding to the project, or a timeframe upon which those commitments would be made.

g. Provide a project time-line, including significant milestones such as the date anticipated to issue a request for proposals for vehicles, or contract for purchase of vehicle(s), and actual or expected delivery date of vehicles, or notice of request for proposal and notice to proceed for capital construction/rehabilitation projects.

C. Submission Dates and Times

Complete proposals for the State of Good Repair initiative must be submitted electronically through the GRANTS.GOV Web site by July 29, 2011. Applicants are encouraged to begin the process of registration on the GRANTS.GOV site well in advance of the submission deadline. Registration is a multi-step process, which may take several weeks to complete before an application can be submitted. In addition to the Mandatory SF424 Form that will be downloaded from GRANTS.GOV, FTA requires applicants to complete the Supplemental FTA Form (Applicant and Proposal Profile) for this initiative. The supplemental form provides guidance and a consistent format for applicants to respond to the criteria outlined in this NOFA and described in detail on the FTA Web site at the program Web site; *http://www.fta.dot.gov/bus.* Applicants *must* use this Supplemental Form and attach it to their submission in GRANTS.GOV to successfully complete the application process. Within 24–48 hours after submitting an electronic application, the applicant should receive an e-mail validation message from GRANTS.GOV. The validation will state whether GRANTS.GOV found any issues with the submitted application. As an additional notification, FTA's system will notify the applicant if there are any problems with the submitted Supplemental FTA Form. If making a resubmission for any reason, include all original attachments regardless of which attachments were updated. Complete instructions on the application process can be found *http://www.fta.dot.gov/bus. Important:* FTA urges applicants to submit their applications at least 72 hours prior to the due date to allow time to receive the validation message and to correct any problems that may have caused a rejection notification. Submissions after July 29, 2011 will not be accepted.

D. Funding Restrictions

Only proposals from eligible recipients for eligible activities will be considered for funding (see Section III). Due to funding limitations, proposers that are selected for funding may receive less than the amount originally requested.

E. Other Submission Requirements

Proposers should submit three (3) copies of any supplemental information that cannot be submitted electronically to the appropriate regional office. Supplemental information submitted in hardcopy must be postmarked by July 29, 2011.

V. Proposal Review, Selection, and Notification

A. Project Evaluation Criteria

Projects will be evaluated by FTA based on the proposals submitted according to the following criteria. Each proposer is encouraged to demonstrate the responsiveness of a project to all of the selection criteria with the most relevant information that the proposer can provide, regardless of whether such information has been specifically requested, or identified, in this notice. FTA will assess the extent to which a project addresses the following criteria.

1. Planning and prioritization at the local/regional level:

a. Project is consistent with the transit priorities identified in the long range plan and/or contingency/illustrative projects. Proposer should note if project could not be included in the financially constrained Transportation Improvement Program (TIP)/Statewide Transportation Improvement Program (STIP) due to lack of funding (if selected, project must be in TIP before grant award).

b. Local support is demonstrated by availability of local match and letters of support for project.

c. In an area with more than one transit operator, the proposal demonstrates coordination with, and support of, other transit operators, or other related projects within the proposer's Metropolitan Planning Organization (MPO) or the geographic region within which the proposed project will operate.

2. The project is ready to implement:

a. Project is a Categorical Exclusion (CE) or required environmental work has been initiated or completed for construction projects requiring an Environmental Assessment (EA) or Environmental Impact Statement (EIS).

b. Project implementation plans are complete, including initial design of facilities projects.

c. TIP/STIP can be amended (evidenced by MPO/State endorsement).

d. Project funds can be obligated and the project implemented quickly, if selected.

3. Technical, legal, and financial capacity to implement the particular project proposed:

a. The proposer has the technical capacity to administer the project.

b. There are no outstanding legal, technical, or financial issues with the grantee that would make this a high-risk project to implement quickly.

c. The proposer has adequate financial systems in place and has identified the source of local match if selected (no deferred local share will be allowed).

In addition, for each of the project types below, the following criteria will apply:

1. For bus projects:

a. The age of the asset to be replaced or rehabilitated by the proposed project, relative to its useful life.

b. The degree to which the proposed project addresses a demonstrated and verifiable backlog of deferred maintenance.

c. Consistency with the proposer's bus fleet management plan.

d. Condition and performance of the asset to be replaced by the proposed project, as ascertained through field inspections or otherwise, if available.

e. The project conforms to FTA's spare ratio guidelines.

2. For bus facility and equipment projects:

a. The age of the asset to be rehabilitated or replaced relative to its useful life.

b. The degree to which proposed project addresses a demonstrated and verifiable backlog of deferred maintenance.

c. Supports emerging or advanced technologies for transit facilities and equipment.

3. For transit asset management system projects:

If asset management system development or upgrades are proposed, the proposal shall describe, as applicable, the system element(s) the proposer is seeking to improve; including:

a. How asset management plans/systems will be developed or upgraded.

b. How asset inventories will be maintained physically and fiscally.

c. How assets initial condition will be assessed.

d. How assets will be inspected and monitored, and at what frequency.

e. How logistical decision support tools (including options and tradeoff analysis) will be used in the proposer's day-to-day operations.

f. Demonstrated long-term financial and management commitment of the proposer to using the asset management system.

B. Review and Selection Process

Proposals will be evaluated by a technical evaluation committee. The FTA Administrator will determine the final selection and amount of funding for each project. Selected projects will be announced in September or October 2011. FTA will publish the list of all selected projects and funding levels in the **Federal Register** and notify successful applicants.

VI. Award Administration

A. Award Notices

FTA will award grants for the selected projects to the proposer through the FTA electronic grants management and award system, TEAM, after receipt of a complete application in TEAM. These grants will be administered and managed by the FTA regional offices in accordance with the Federal requirements of the Section 5309 Bus program. At the time the project selections are announced, FTA will extend pre-award authority for the selected projects. There is no blanket pre-award authority for these projects before announcement.

B. Administrative and National Policy Requirements

1. Grant Requirements

If selected, applicants will apply for a grant through TEAM and adhere to the customary FTA grant requirements of the Section 5309 Bus and Bus Facilities program, including those of FTA Circular 9300.1B and Circular 5010.1D and 49 U.S.C. 5333(b) labor protections. All discretionary grants, regardless of award amount, will be subject to the Congressional Notification and release process. Technical assistance regarding these requirements is available from each FTA regional office.

2. Planning

Applicants are encouraged to notify the appropriate State Departments of Transportation and MPO in areas likely to be served by the project funds made available under this program. Incorporation of funded projects in the long-range plans and transportation improvement programs of States and metropolitan areas is required of all funded projects.

3. Standard Assurances

The applicant assures that it will comply with all applicable Federal statutes, regulations, executive orders, FTA circulars, and other Federal administrative requirements in carrying out any project supported by the FTA grant. The applicant acknowledges that it is under a continuing obligation to comply with the terms and conditions of the grant agreement issued for its project with FTA. The applicant understands that Federal laws, regulations, policies, and administrative practices might be modified from time to time and may affect the implementation of the project. The applicant agrees that the most recent Federal requirements will apply to the project, unless FTA issues a written determination otherwise. The applicant must submit the Certifications and Assurances before receiving a grant if it does not have current certifications on file.

C. Reporting

Post-award reporting requirements include submission of Financial Status Reports and Milestone Reports in TEAM on a quarterly basis for all projects. Documentation is required for payment. In addition, project sponsors receiving grants for asset management systems and innovative technologies may be required to report on the performance of these systems and technologies.

VII. Agency Contacts

Contact the appropriate FTA Regional Administrator (Appendix A) for proposal specific information and issues. For information on the SGR Bus and Bus Facilities Initiative, contact Kimberly Sledge, Office of Program Management, (202) 366–2053, e-mail: *kimberly.sledge@dot.gov*. A TDD is available at 1–800–877–8339 (TDD/FIRS).

Issued in Washington, DC this 21st day of June, 2011.

Peter Rogoff,

Administrator.

Appendix A

FTA Regional and Metropolitan Offices

Mary Beth Mello, Regional Administrator, Region 1—Boston, Kendall Square, 55 Broadway, Suite 920, Cambridge, MA 02142–1093, Tel. 617–494–2055.

States served: Connecticut, Maine, Massachusetts, New Hampshire, Rhode, Island, and Vermont.

Brigid Hynes-Cherin, Regional Administrator, Region 2—New York, One Bowling Green, Room 429, New York, NY 10004–1415, Tel. 212–668–2170.

States served: New Jersey, New York.

New York Metropolitan Office, Region 2—New York, One Bowling Green, Room 428, New York, NY 10004–1415, Tel. 212–668–2202.

Letitia Thompson, Regional Administrator, Region 3—Philadelphia, 1760 Market Street, Suite 500, Philadelphia, PA 19103–4124, Tel. 215–656–7100.

States served: Delaware, Maryland, Pennsylvania, Virginia, West Virginia, and District of Columbia.

Philadelphia Metropolitan Office, Region 3—Philadelphia, 1760 Market Street, Suite 500, Philadelphia, PA 19103–4124, Tel. 215–656–7070.

Washington, D.C. Metropolitan Office, 1990 K Street, NW., Room 510, Washington, DC 20006, Tel. 202–219–3562.

Yvette Taylor, Regional Administrator, Region 4—Atlanta, 230 Peachtree Street, NW., Suite 800, Atlanta, GA 30303, Tel. 404–865–5600.

States served: Alabama, Florida, Georgia, Kentucky, Mississippi, North, Carolina, Puerto Rico, South Carolina, Tennessee, and Virgin Islands.

Marisol Simon, Regional Administrator, Region 5—Chicago, 200 West Adams Street, Suite 320, Chicago, IL 60606, Tel. 312–353–2789.

States served: Illinois, Indiana, Michigan, Minnesota, Ohio, and Wisconsin.

Chicago Metropolitan Office, Region 5—Chicago, 200 West Adams Street, Suite 320, Chicago, IL 60606, Tel. 312–353–2789.

Robert C. Patrick, Regional Administrator, Region 6—Ft. Worth, 819 Taylor Street, Room 8A36, Ft. Worth, TX 76102, Tel. 817–978–0550.

States served: Arkansas, Louisiana, Oklahoma, New Mexico and Texas.

Mokhtee Ahmad, Regional Administrator, Region 7—Kansas City, MO, 901 Locust Street, Room 404, Kansas City, MO 64106, Tel. 816–329–3920.

States served: Iowa, Kansas, Missouri, and Nebraska.

Terry Rosapep, Regional Administrator, Region 8—Denver, 12300 West Dakota Ave., Suite 310, Lakewood, CO 80228–2583, Tel. 720–963–3300.

States served: Colorado, Montana, North Dakota, South Dakota, Utah, and, Wyoming.

Leslie T. Rogers, Regional Administrator, Region 9—San Francisco, 201 Mission Street, Room 1650, San Francisco, CA 94105–1926, Tel. 415–744–3133.

States served: American Samoa, Arizona, California, Guam, Hawaii, Nevada, and the Northern Mariana, Islands.

Los Angeles Metropolitan Office, Region 9—Los Angeles, 888 S. Figueroa Street, Suite 1850, Los Angeles, CA 90017–1850, Tel. 213–202–3952.

Rick Krochalis, Regional Administrator, Region 10—Seattle, Jackson Federal Building, 915 Second Avenue, Suite 3142, Seattle, WA 98174–1002, Tel. 206–220–7954.

States served: Alaska, Idaho, Oregon, and Washington.

APPENDIX B

FY 2011 Discretionary Programs Schedule

Initiative	Funding Availability	NOFA Publication Target	Application Deadline
SGR Initiative (Bus)	**$750,000,000**	**6/24/2011**	**7/29/2011**
Livability Expansion Initiative	**$175,000,000**	**6/24/2011**	**7/29/2011**
Alternatives Analysis	$25,000,000		
Bus & Bus Facilities	$150,000,000		
Sustainability Initiative	**$101,400,000**	**6/24/2011**	**8/23/2011**
Clean Fuels Bus Program	$51,500,000		
TIGGER III	$49,900,000		
Other Programs	**$50,640,500**		
Paul S. Sarbanes Transit in Parks	$26,765,500	3/10/2011	5/9/2011
Tribal Transit	$15,075,000	7/25/2011	9/26/2011
Over-the-Road-Bus	$8,800,000	7/11/2011	9/12/2011

[FR Doc. 2011–15918 Filed 6–23–11; 8:45 am]
BILLING CODE P

DEPARTMENT OF TRANSPORTATION

National Highway Traffic Safety Administration

[U.S. DOT Docket Number NHTSA–2011–0084]

Reports, Forms, and Recordkeeping Requirements

AGENCY: National Highway Traffic Safety Administration (NHTSA), Department of Transportation.

ACTION: Request for public comment on proposed collection of information.

SUMMARY: Before a Federal agency can collect certain information from the public, it must receive approval from the Office of Management and Budget (OMB). Under procedures established by the Paperwork Reduction Act of 1995, before seeking OMB approval, Federal agencies must solicit public comment on proposed collections of information, including extensions and reinstatement of previously approved collections.

This document describes one collection of information for which NHTSA intends to seek OMB approval.

DATES: Written comments should be submitted by August 23, 2011.

ADDRESSES: You may submit comments [identified by Docket No. DOT–NHTSA–20XX–XXXX] through one of the following methods:

- *Federal eRulemaking Portal: http://www.regulations.gov.* Follow the online instructions for submitting comments.
- *Mail or Hand Delivery:* Docket Management Facility, U.S. Department of Transportation, 1200 New Jersey Avenue, SE., West Building, Room W12–140, Washington, DC 20590, between 9 a.m. and 5 p.m., Monday through Friday, except on Federal holidays. Telephone 1–800–647–5527.
- Fax 202–493–2251.

FOR FURTHER INFORMATION CONTACT: Walter Culbreath, NHTSA, 1200 New Jersey Avenue, SE., W51–204, NPO–400, Washington, DC 20590. Mr. Culbreath's telephone number is (202) 366–1566. Please identify the relevant collection of information by referring to its OMB Control Number.

SUPPLEMENTARY INFORMATION: Under the Paperwork Reduction Act of 1995, before an agency submits a proposed collection of information to OMB for approval, it must first publish a document in the Federal Register providing a 60-day comment period and otherwise consult with members of the public and affected agencies concerning each proposed collection of information. The OMB has promulgated regulations describing what must be included in such a document. Under OMB's regulation (at 5 CFR 1320.8(d), an agency must ask for public comment on the following:

(i) Whether the proposed collection of information is necessary for the proper performance of the functions of the agency, including whether the information will have practical utility;

(ii) The accuracy of the agency's estimate of the burden of the proposed collection of information, including the validity of the methodology and assumptions used;

(iii) How to enhance the quality, utility, and clarity of the information to be collected;

(iv) How to minimize the burden of the collection of information on those who are to respond, including the use of appropriate automated, electronic, mechanical, or other technological collection techniques or other forms of information technology, *e.g.* permitting electronic submission of responses.

In compliance with these requirements, NHTSA asks for public comments on the following proposed collections of information:

(1) Title: Consumer Compliant/Recall Audit Information

OMB Control Number: 2127–0008.

Affected Public: Individuals and households.

Abstract: Chapter 301 of Title 49 of the United States Code, the Secretary of Transportation is authorized to require manufacturers of motor vehicles and items of motor vehicle equipment to conduct owner notification and remedy, *i.e.,* a recall campaign, when it has been determined that a safety defect exists in the performance, construction, components, or materials in motor vehicles and motor vehicle equipment. To make this determination, the National Highway Traffic Safety Administration (NHTSA) solicits information from vehicle owners which is used to identify and evaluate possible safety-related defects and provide the necessary evidence of the existence of such a defect. Under the Authority of Chapter 301 of Title 49 of the United States Code, the Secretary of Transportation is authorized to require manufacturers of motor vehicle and motor vehicle equipment which do not comply with the applicable motor vehicle safety standards or contains a defect that relates to motor vehicle safety to notify each owner that their vehicle contains a safety defect or noncompliance. Also, the manufacturer of each such motor vehicle item of replacement equipment presented for remedy pursuant to such notification shall cause such defect or noncompliance to be remedied without charge. In the case of a motor vehicle presented for remedy pursuant to such notification, the manufacturer shall cause the vehicle remedied by whichever of the following means he elects: (1) By repairing such vehicle; (2) by replacing such motor vehicle without charge; or (3) by refunding the purchase price less depreciation. To ensure these objectives are being met, NHTSA audits recalls conducted by manufacturer. These audits are performed on a randomly selected number of vehicle owners for verification and validation purposes.

Estimated Annual Burden: 36,380 hours.

Estimated Number of Respondents: 239,000.

(2) Title: Replaceable Light Source Dimensional Information Collection, 49 CFR Part 564

OMB Number: 2127–0563.

Type of Request: Extension of a currently approved collection.

Affected Public: Business or other for profit organizations.

Abstract: The information to be collected is in response to 49 CFR part 564, ''Replaceable Light Source Dimensional Information.'' Persons desiring to use newly designed replaceable headlamp light sources are required to submit interchangeability and performance specifications to the agency. After a short agency review to assure completeness, the information is placed in a public docket for use by any person who would desire to manufacture headlamp light sources for highway motor vehicles. In Federal Motor Vehicle Safety Standard No. 108, Lamps, reflective devices and associated equipment,'' Part 564 submission are referenced as being the source of information regarding the performance and interchangeability information for legal headlamp light sources, whether original equipment or replacement equipment. Thus, the submitted information about headlamp light sources becomes the basis for certification of compliance with safety standards.

Estimated Total Annual Burden: 28.

Estimated Number of Respondents: 7.

(3) Title: Compliance Labeling of Retroreflective Materials Heavy Trailer Conspicuity

OMB Number: 2127–0569.

Type of Request: Extension of a currently approved collection.

Affected Public: Business or other for profit organizations.

Abstract: Federal Motor Vehicle Safety Standard No. 108, ''Lamps Reflective Devices, and Associated Equipment,'' specifies requirements for vehicle lighting for the purposes of reducing traffic accidents and their tragic results by providing adequate roadway illumination, improved vehicle conspicuity, appropriate information transmission through signal lamps, in both day, night, and other conditions of reduced visibility. For certifications and identification purposes, the Standard requires the permanent marking of the letters ''DOT–C2,'' DOT–C3'', or DOT –C4' at least 3mm high at regular intervals on retroreflective sheeting material having adequate performance to provide effective trailer conspicuity.

The manufacturers of new tractors and trailers are required to certify that their products are equipped with retroreflective material complying with the requirements of the standard. The Federal Highway Administration (FHWA) Office of Motor Carrier Safety enforces this and other standards through roadside inspections of trucks. There is no practical field test for the performance requirements, and labeling is the only objectives way of distinguishing trailer conspicuity grade material from lower performance material. Without labeling, FHWA will not be able to enforce the performance requirements of the standard and the compliance testing of new tractors and trailers will be complicated. Labeling is also important to small trailer manufactures because it may help them to certify compliance. Because wider stripes or material of lower brightness also can provide the minimum safety performance, the marking system serves the additional role of identifying the minimum stripe width required for retroreflective brightness of the particular material. Since the differences between the brightness grades of suitable retroreflective conspicuity material is not obvious from inspection, the marking system is necessary for tractor and trailer manufacturers and repair shops to assure compliance and for FHWA to inspect tractors and trailers in use. Permanent labeling is used to identify retroreflective material having the minimum properties required for effective conspicuity of trailers at night. The information enables the FHWA to make compliance inspections, and it aids tractor and trailer owners and repairs shops in choosing the correct repair materials for damaged tractors and trailers. It also aids smaller trailer manufacturers in certifying compliance of their products.

The FHWA will not be able to determine whether trailers are properly equipped during roadside inspections without labeling. The use of cheaper and more common reflective materials, which are ineffective for the application, would be expected in repairs without the labeling requirement.

Estimated Total Annual Burden: 1.

Estimated Number of Respondents: 3.

(4) Title: 49 CFR Part 576, Record Retention

OMB Number: 2127–0042.

Type of Request: Extension of a currently approved information collection.

Abstract: Under 49 U.S.C. Section 30166(e), NHTSA reasonably may require a manufacturer of a motor vehicle or motor vehicle equipment to keep records, and a manufacturer, distributor, or dealer to make reports, to enable (NHTSA) to decide whether the manufacturer, distributor or dealer has complied or is complying with this chapter or a regulation prescribed under this chapter.

49 U.S.C. 30118(c) requires manufacturers to notify NHTSA and owners, purchasers, and dealers if the manufacturer (1) learn that any vehicle or equipment manufactured by it contains a defect and decides in good faith that the defect relates to motor vehicle safety, or (2) decides in good faith that the vehicle or equipment does not comply with an applicable Federal motor vehicle safety standard. The only way for the agency to decide if and when a manufacturer learned of a safety-related defect or decided in good faith that some products did not comply with an applicable Federal motor vehicle safety standard is for the agency to have access to the information available to the manufacturer.

Affected Public: Business or other-for-profit, individuals or households.

Estimated Total Annual Burden: 40,000.

Estimated Number of Respondents: 1020.

(5) Title: Phase-in Production Reporting Requirements for Electronic Stability Control System (ESC)

OMB Number: 2127–0651.

Type of Request: Extension of a currently approved information collection.

Abstract: Manufacturers of vehicles under 10,000 lbs GVWR are required to report what percent of their vehicles are equipped with ESC during each of a 3-year phase-in of FMVSS No. 126. As part of a comprehensive plan for reducing the serious risk of rollover crashes and the risk of death and serious injury in those crashes, NHTSA is proposing to establish a new Federal motor vehicle safety standard, FMVSS No. 126, to require electronic stability control (ESC) systems on passenger cars, multipurpose vehicles, trucks and buses with a gross vehicle weight rating of 4,536 Kg (10,000 pounds) or less. Based on its crash data studies, NHTSA estimates that the installation of ESC will reduce single vehicle crashes of passenger cars by 34% and single vehicle crashes of sport utility vehicles (SUVs) by 59% with a much greater reduction of rollover crashes.

Affected Public: Private Sector.

Estimated Total Annual Burden: 42.

Estimated Number of Respondents: 21.

(6) Title: Racial Profiling, State Traffic Data, and Child Booster Seat Grant Program

OMB Number: 2127–0653.

Type of Request: Extension of a currently approved information collection

Abstract: The Safe, Accountable, Flexible, Efficient Transportation Equity Act: A Legacy for Users (SAFETEA–LU), Public Law 109–59, authorizes several grant programs covering fiscal years (FY) 2006–2009, to be administered by the National Highway Traffic Safety Administration (NHTSA). This information collection supports the Department's Strategic goal of safety by reducing the number of deaths and severity of injuries as a result of motor vehicle accidents. Section 1906 authorizes a grant program for States that enact and enforce a law that prohibits the use of racial profiling in the enforcement of traffic laws on Federal-aid highways. Section 2006 authorizes a grant program to support the development and implementation of State traffic safety information systems. Section 2011 authorizes a grant program for child safety seats and child booster seats.

Affected Public: State, Local, and Tribal Governments.

Estimated Total Annual Burden: 5130.

Estimated Number of Respondents: 57.

Comments are invited on: whether the proposed collection of information is necessary for the proper performance of the functions of the Department, including whether the information will have practical utility; the accuracy of the Department's estimate of the burden of the proposed information collection;

ways to enhance the quality, utility and clarity of the information to be collected; and ways to minimize the burden of the collection of information on respondents, including the use of automated collection techniques or other forms of information technology.

Issued on: June 21, 2011.

Dan Pitton,

Director; Office of Mission, Architect, and Planning.

[FR Doc. 2011–15843 Filed 6–23–11; 8:45 am]

BILLING CODE 4910–59–P

DEPARTMENT OF TRANSPORTATION

Research and Innovative Technology Administration

Notice of Competition for University Transportation Centers (UTC) Program Grants

AGENCY: Research and Innovative Technology Administration, DOT.

ACTION: Notice.

SUMMARY: The Research and Innovative Technology Administration (RITA) of the U.S. Department of Transportation (U.S. DOT) is providing notice that it intends to conduct a competition for University Transportation Centers (UTC) Program grants for the purpose of performing multi-modal and multidisciplinary research, education and technology transfer activities supportive of Departmental priorities.

Proposals will be evaluated through a competitive process on the basis of demonstrated ability, research, technology and education resources, leadership, multi-modal research capability, commitment to transportation workforce development programs, technology transfer capability, the use of peer review, and effective partnerships to advance diversity.

The Research and Innovative Technology Administration RITA will release a detailed notice for these funds.

FOR FURTHER INFORMATION CONTACT: Curtis Tompkins, Office of Research, Development and Technology, mail code RDT–30, Research and Innovative Technology Administration RITA, 1200 New Jersey Avenue, SE., Washington, DC 20590. Telephone Number (202) 366–5661 or E-mail *Curtis.Tompkins@dot.gov.*

SUPPLEMENTARY INFORMATION: The Safe, Accountable, Flexible, Efficient Transportation Equity Act: A Legacy for Users (SAFETEA–LU, Pub. L. 109–59 section 7301, as amended by Pub. L. 110–244) authorizes the Administrator of the Research and Innovative Technology Administration (RITA) of the U.S. Department of Transportation (U.S. DOT) to enter into grants and cooperative agreements to conduct research into transportation service and infrastructure assurance and to carry out other research activities of RITA. The UTC Program will adhere to the structure and criteria outlined in SAFETEA–LU for competitive UTC Program grants.

Issued in Washington, DC, on June 17, 2011.

Curtis J. Tompkins,

Acting Associate Administrator for Research, Development and Technology.

[FR Doc. 2011–15688 Filed 6–23–11; 8:45 am]

BILLING CODE 4910–HY–P

DEPARTMENT OF TRANSPORTATION

Surface Transportation Board

[Docket No. FD 35493]

Texas Department of Transportation—Acquisition Exemption—Line of Union Pacific Railroad Company

Texas Department of Transportation (TxDOT), a Class III rail carrier, has filed a supplemental verified notice of exemption [1] under 49 CFR 1150.41 to acquire from Union Pacific Railroad Company (UP) 1.28 miles of rail line on UP's Bonham Subdivision between mileposts 127.5 and 128.78, in Fannin County, TX.

TxDOT states that it has reached an agreement with UP whereby TxDOT will acquire UP's right, title, and interest in certain personal and real property in Fannin County. TxDOT further states that it will also enter into an agreement with the Fannin Rural Rail Transportation District (FRRTD) that will permit FRRTD or its operator to conduct tourist passenger operations between mileposts 94.0 and 128.78.[2]

A related verified notice of exemption was concurrently filed in Docket No. FD 35494, *Mid-Michigan Railroad, Inc., d/b/a Texas Northeastern Railroad—Trackage Rights Exemption—Texas Department of Transportation,* whereby, following consummation of this transaction, TxDOT will grant trackage rights to Mid-Michigan Railroad, Inc., d/b/a Texas Northeastern Railroad to perform freight rail service over the line.

TxDOT certifies that its projected annual revenues as a result of this transaction will not exceed those that would qualify it as a Class III rail carrier and will not exceed $5 million.

The proposed transaction is scheduled to be consummated on or after July 8, 2011, the effective date of the exemption (30 days after the exemption was filed).

If the verified notice contains false or misleading information, the exemption is void *ab initio.* Petitions to revoke the exemption under 49 U.S.C. 10502(d) may be filed at any time. The filing of a petition to revoke will not automatically stay the effectiveness of the exemption. Stay petitions must be filed no later than July 1, 2011 (at least 7 days before the exemption becomes effective).

An original and 10 copies of all pleadings, referring to Docket No. FD 35493, must be filed with the Surface Transportation Board, 395 E Street, SW., Washington, DC 20423–0001. In addition, a copy of each pleading must be served on Richard H. Streeter, 5255 Partridge Lane, NW., Washington, DC 20016.

Board decisions and notices are available on our Web site at *http://www.stb.dot.gov.*

Decided: June 20, 2011.

By the Board, Rachel D. Campbell, Director, Office of Proceedings.

Andrea Pope-Matheson,

Clearance Clerk.

[FR Doc. 2011–15864 Filed 6–23–11; 8:45 am]

BILLING CODE 4915–01–P

[1] The notice was originally submitted on June 3, 2011, but was supplemented on June 8, 2011. Therefore, June 8, 2011 will be the official filing date and the basis for all due dates.

[2] TxDOT was authorized to acquire UP's interest in a connecting rail line between mileposts 94.0 and 127.5. *See State of Texas, acting by and through the Texas Depart. of Transp.—Acq. Exemp.—Union Pacific RR,* FD 34834 (STB served Feb. 24, 2006).

DEPARTMENT OF TRANSPORTATION

Surface Transportation Board

[Docket No. EP 290 (Sub-No. 5) (2011–3)]

Quarterly Rail Cost Adjustment Factor

AGENCY: Surface Transportation Board, DOT.

ACTION: Approval of rail cost adjustment factor.

SUMMARY: The Board has approved the third quarter 2011 Rail Cost Adjustment Factor (RCAF) and cost index filed by the Association of American Railroads. The third quarter 2011 RCAF (Unadjusted) is 1.206. The third quarter 2011 RCAF (Adjusted) is 0.534. The third quarter 2011 RCAF–5 is 0.506.

DATES: *Effective Date:* July 1, 2011.

FOR FURTHER INFORMATION CONTACT: Pedro Ramirez, (202) 245–0333. Federal Information Relay Service (FIRS) for the hearing impaired: (800) 877–8339.

SUPPLEMENTARY INFORMATION: Additional information is contained in the Board's decision, which is available on our Web site, *http://www.stb.dot.gov*. Copies of the decision may be purchased by contacting the Office of Public Assistance, Governmental Affairs, and Compliance at (202) 245–0236. Assistance for the hearing impaired is available through FIRS at (800) 877–8339.

This action will not significantly affect either the quality of the human environment or energy conservation.

Decided: June 20, 2011.

By the Board, Chairman Elliott, Vice Chairman Begeman, and Commissioner Mulvey.

Andrea Pope-Matheson,

Clearance Clerk.

[FR Doc. 2011–15781 Filed 6–23–11; 8:45 am]

BILLING CODE 4915–01–P

DEPARTMENT OF TRANSPORTATION

Surface Transportation Board

[Docket No. FD 35494]

Mid-Michigan Railroad, Inc., d/b/a Texas Northeastern Railroad—Trackage Rights Exemption—Line of Texas Department of Transportation

Pursuant to a written trackage rights agreement,[1] the Texas Department of Transportation (TxDOT), a Class III rail carrier, has agreed to grant local trackage rights to Mid-Michigan Railroad, Inc., d/b/a Texas Northeastern Railroad (TNER) over 1.28 miles of rail line, part of Union Pacific Railroad Company's (UP) Bonham Subdivision, between mileposts 127.5 and 128.78, in Fannin County, TX.[2] A related verified notice of exemption was concurrently filed in Docket No. FD 35493, *Texas Department of Transportation—Acquisition Exemption—Line of Union Pacific Railroad Company,* in which TxDOT seeks to acquire from UP the 1.28 miles of rail line that is the subject of this transaction.

The purpose of the trackage rights is to provide rail service to potential customers in Bonham, TX, that were capable of being served by TNER pursuant to a lease of the subject line from UP.[3] TNER will operate its own trains with its own crews under the trackage rights agreement. In addition to the trackage rights, TxDOT will lease the line to an operator that will provide tourist passenger operations.[4]

The proposed transaction is scheduled to be consummated on or after July 8, 2011, the effective date of the exemption (30 days after the exemption was filed).

As a condition to this exemption, any employees affected by the trackage rights will be protected by the conditions imposed in *Norfolk & Western Railway—Trackage Rights—Burlington Northern, Inc.,* 354 I.C.C. 605 (1978), as modified in *Mendocino Coast Railway—Lease & Operate—California Western Railroad,* 360 I.C.C. 653 (1980).

This notice is filed under 49 CFR 1180.2(d)(7). If the notice contains false or misleading information, the exemption is void *ab initio.* Petitions to revoke the exemption under 49 U.S.C. 10502(d) may be filed at any time. The filing of a petition to revoke will not automatically stay the effectiveness of the exemption. Stay petitions must be filed by July 1, 2011 (at least 7 days before the exemption becomes effective).

An original and 10 copies of all pleadings, referring to Docket No. FD 35494, must be filed with the Surface Transportation Board, 395 E Street, SW., Washington, DC 20423–0001. In addition, a copy of each pleading must be served on Richard H. Streeter, 5255 Partridge Lane, NW., Washington, DC 20016.

Board decisions and notices are available on our Web site at *http://www.stb.dot.gov.*

Decided: June 20, 2011.

By the Board, Rachel D. Campbell, Director, Office of Proceedings.

Andrea Pope-Matheson,

Clearance Clerk.

[FR Doc. 2011–15855 Filed 6–23–11; 8:45 am]

BILLING CODE 4915–01–P

DEPARTMENT OF TRANSPORTATION

Surface Transportation Board

[Docket No. FD 35531]

Lake Providence Port Commission—Trackage Rights Exemption—Delta Southern Railroad, Inc.

Pursuant to a written trackage rights agreement dated May 26, 2011, Delta Southern Railroad, Inc. (DSR), has agreed to grant overhead trackage rights to Lake Providence Port Commission (Lake Providence) over approximately 1.25 miles of rail line between milepost 471.0 (Highway Barn near Lake Providence) and milepost 472.25 in East Carroll Parish, La., where the trackage rights line connects with a private side track and lead track owned by Lake Providence that allow rail service to the warehouses and dock at the Port.

The purpose of the transaction is to allow Lake Providence to connect its private tracks at the Port with a line it will acquire from DSR. *See Delta Southern R.R.—Aban. Exemption—in E. Carroll Parish, La.,* AB 384 (Sub-No. 2X) (STB served June 7, 2011).

The transaction is scheduled to be consummated after July 10, 2011, the effective date of the exemption (30 days after the exemption was filed).

As a condition to this exemption, any employees affected by the trackage rights will be protected by the conditions imposed in *Norfolk & Western Railway—Trackage Rights—Burlington Northern, Inc.,* 354 I.C.C. 605 (1978), as modified in *Mendocino Coast Railway—Lease & Operate—California Western Railroad,* 360 I.C.C. 653 (1980).

This notice is filed under 49 CFR 1180.2(d)(7). If the notice contains false or misleading information, the exemption is void *ab initio.* Petitions to revoke the exemption under 49 U.S.C. 10502(d) may be filed at any time. The filing of a petition to revoke will not automatically stay the effectiveness of the exemption. Stay petitions must be filed by July 1, 2011 (at least 7 days before the exemption becomes effective).

An original and 10 copies of all pleadings, referring to Docket No. FD 35531, must be filed with the Surface Transportation Board, 395 E Street, SW., Washington, DC 20423–0001. In addition, a copy of each pleading must be served on Eric M. Hocky, Thorp Reed & Armstrong, LLP, One Commerce Square, 2005 Market Street, Suite 1000, Philadelphia, PA 19103.

Board decisions and notices are available on our Web site at *http://www.stb.dot.gov.*

Decided: June 20, 2011.

By the Board, Rachel D. Campbell, Director, Office of Proceedings.

Andrea Pope-Matheson,

Clearance Clerk.

[FR Doc. 2011–15732 Filed 6–22–11; 8:45 am]

BILLING CODE 4915–01–P

[1] A copy of the trackage rights agreement was submitted with the notice of exemption.

[2] The notice was originally submitted on June 3, 2011, but was supplemented on June 8, 2011. Therefore, June 8, 2011 will be the official filing date and the basis for all due dates.

[3] As part of this transaction, TNER advises that the UP–TNER lease will be terminated.

[4] At Article 1(b) of the trackage rights agreement, TxDOT states that it will "give priority to TNER's freight train operations." TxDOT must ensure that tourist train operations do not interfere with TNER's ability to carry out its common carrier obligation.

DEPARTMENT OF THE TREASURY

Submission for OMB Review; Comment Request

June 21, 2011.

The Department of Treasury will submit the following public information collection requirement(s) to OMB for review and clearance under the Paperwork Reduction Act of 1995, Public Law 104–13 on or after the date of publication of this notice. Copies of the submission(s) may be obtained by calling the Treasury Bureau Clearance Officer listed. Comments regarding this information collection should be addressed to the OMB reviewer listed and to the Treasury Department Clearance Officer, Department of the Treasury, Room 11010, 1750 Pennsylvania Avenue, NW., Washington, DC 20220.

DATES: Written comments should be received on or before July 25, 2011 to be assured of consideration.

Financial Crimes Enforcement Network (FinCEN)

OMB Number: 1506–0013.

Type of Review: Revision of a currently approved collection.

Title: Registration of Money Services Business, 31 CFR 1022.380.

Form: FinCEN Form 107.

Abstract: Money services businesses file Form 107 to register with the Department of the Treasury pursuant to 31 U.S.C. 5330 and 31 CFR 1022.380. The information on the form is used by criminal investigators, and taxation and regulatory enforcement authorities, during the course of investigations involving financial crimes.

Affected Public: Private Sector: Businesses or other for-profits.

Estimated Total Burden Hours: 42,000.

Bureau Clearance Officer: Russell Stephenson, Department of the Treasury, Financial Crimes Enforcement Network, P.O. Box 39, Vienna, VA 22183; (202) 354–6012

OMB Reviewer: Shagufta Ahmed, Office of Management and Budget, New Executive Office Building, Room 10235, Washington, DC 20503; (202) 395–7873

Dawn D. Wolfgang,

Treasury PRA Clearance Officer.

[FR Doc. 2011–15779 Filed 6–23–11; 8:45 am]

BILLING CODE 4810–02–P

DEPARTMENT OF THE TREASURY

Departmental Offices; Privacy Act of 1974, as Amended

AGENCY: Departmental Offices, Treasury.

ACTION: Notice of Alteration of Privacy Act System of Records for the Home Affordable Modification Program.

SUMMARY: The U.S. Department of the Treasury gives notice of a proposed alteration to the system of records entitled ''Treasury/DO .218—Home Affordable Modification Program.''

DATES: Comments should be received no later than July 25, 2011. The proposed routine use will be effective August 3, 2011 unless the Department receives comments that would result in a contrary determination.

ADDRESSES: Comments should be sent to the Deputy Assistant Secretary Fiscal Operations and Policy, Department of the Treasury, 1500 Pennsylvania Avenue, NW., Washington, DC 20220. The Department will make such comments available for public inspection and copying in the Department's Library, Room 1428, Main Treasury Building, 1500 Pennsylvania Avenue, NW., Washington, DC 20220, on official business days between the hours of 10 a.m. and 5 p.m. Eastern Time. You can make an appointment to inspect comments by telephoning (202) 622–0990 (This is not a toll-free number). All comments, including attachments and other supporting materials, received are part of the public record and subject to public disclosure. You should submit only information that you wish to make available publicly.

FOR FURTHER INFORMATION CONTACT: Theodore R. Kowalsky, Manager, Data & Information Technology, Office of Financial Agents, Department of the Treasury, 1500 Pennsylvania Avenue, NW., Washington, DC 20220, 202–927–9445 or at *Ted.Kowalsky@do.treas.gov.*

SUPPLEMENTARY INFORMATION: The Department established the Home Affordable Modification Program (HAMP), pursuant to the Emergency Economic Stabilization Act of 2008 (Pub. L. 110–343) (the ''EESA''), to enable eligible homeowners who have a record of making timely mortgage payments, but are experiencing hardships in doing so, to modify the principal amounts and interest rates of their mortgage loans. The system of records notice was last published in its entirety on April 20, 2010, at 75 FR 20699. The Department subsequently amended routine use (13) on July 2, 2010, at 75 FR 38608.

The purpose of this alteration to Routine Use (8) is to harmonize this Routine Use with Routine Use (13), such that it will enable the Financial Agent of the Department, its employees, agents, and contractors, or a contractor of the Department to assess the quality of services provided under HAMP, their efficient administration, and to report on the program's overall execution.

The purpose of this alteration to Routine Use (13) is to allow broader disclosure of information to the Department of Commerce (''Commerce''), which will provide technical analysis and support to the Department of the Treasury to assess the quality of services provided under HAMP and to report on the program's overall execution.

Additionally, the Department proposes adding a new Routine Use (16), to read as follows:

''(16) Disclose information to an authorized recipient who has assured the Department or a Financial Agent of the Department in writing that the record will be used solely for research purposes designed to assess the quality of and efficient administration of HAMP, subject to the same or equivalent limitations applicable to the Department's officers and employees under the Privacy Act.''

The report of an altered system of records, as required by 5 U.S.C. 552a(r) of the Privacy Act, has been provided to the Committee on Oversight and Government Reform of the House of Representatives, the Committee on Homeland Security and Governmental Affairs of the Senate, and the Office of Management and Budget.

For the reasons set forth in this preamble, the Department proposes to alter system of records entitled ''Treasury/DO .218—Home Affordable Modification Program,'' as follows:

TREASURY/DO .218

SYSTEM NAME:

Home Affordable Modification Program Records—Treasury/DO.

* * * * *

ROUTINE USES OF RECORDS MAINTAINED IN THE SYSTEM, INCLUDING CATEGORIES OF USERS AND THE PURPOSES OF SUCH USES:

* * * * * * *

Description of changes:

1. The phrase ''for the purpose of ensuring the efficient administration'' in Routine Use (8) is replaced with the phrase ''for the purpose of assessing the quality of and efficient administration'', such that Routine Use (8) is revised to read as follows: ''(8) Disclose information to a Financial Agent of the Department, its employees, agents, and contractors, or to a contractor of the Department, for the purpose of assessing the quality of and efficient administration of HAMP and compliance with relevant guidelines,

agreements, directives and requirements, and subject to the same or equivalent limitations applicable to Department's officers and employees under the Privacy Act;''

2. The phrase ''the Department of Commerce (''Commerce''),'' is added to Routine Use (13) between the phrases ''Housing and Urban Development,'' and ''Federal financial regulators'', and the phrase ''to improve the quality'' is replaced with the phrase ''to assess the quality and efficiency'', such that Routine Use (13) is revised to read as follows: ''(13) Disclose information and statistics to the Department of Housing & Urban Development, the Department of Commerce (''Commerce''), Federal financial regulators, the U.S. Department of Justice (''DOJ''), and the Federal Housing Finance Agency to assess the quality and efficiency of services provided under HAMP, to ensure compliance with HAMP and other laws, and to report on the program's overall execution and progress;''

3. The period ''.'' at the end of Routine Use (15) is replaced with a semicolon '';'' followed by the word ''and'', and the following new Routine Use is added at the end thereof: ''(16) Disclose information to an authorized recipient who has assured the Department or a Financial Agent of the Department in writing that the record will be used solely for research purposes designed to assess the quality of and efficient administration of HAMP, subject to the same or equivalent limitations applicable to the Department's officers and employees under the Privacy Act.''

* * * * *

Dated: June 13, 2011.

Melissa Hartman,

Deputy Assistant Secretary for Privacy, Transparency, and Records.

[FR Doc. 2011–15860 Filed 6–23–11; 8:45 am]

BILLING CODE 4810–25–P

DEPARTMENT OF THE TREASURY

Fiscal Service

Surety Companies Acceptable In Federal Bonds; Termination; Clearwater Insurance Company

AGENCY: Financial Management Service, Fiscal Service, Department of the Treasury.

ACTION: Notice.

SUMMARY: This is Supplement No. 12 to the Treasury Department Circular 570; 2010 Revision, published July 1, 2010, at 75 FR 38192.

FOR FURTHER INFORMATION CONTACT: Surety Bond Branch at (202) 874–6850.

SUPPLEMENTARY INFORMATION: Notice is hereby given that the Certificate of Authority issued by the Treasury to Clearwater Insurance Company (NAIC# 25070) under 31 U.S.C. 9305 to qualify as an acceptable surety on Federal bonds is terminated immediately. Federal bond-approving officials should annotate their reference copies of the Treasury Department Circular 570 (''Circular''), 2010 Revision, to reflect this change.

With respect to any bonds, including continuous bonds, currently in force with above listed company, bond-approving officer should secure new bonds with acceptable sureties in those instances where a significant amount of liability remains outstanding. In addition, in no event, should bonds that are continuous in nature be renewed.

The Circular may be viewed and downloaded through the Internet at *http://www.fms.treas.gov/c570.*

Questions concerning this notice may be directed to the U.S. Department of the Treasury, Financial Management Service, Financial Accounting and Services Division, Surety Bond Branch, 3700 East-West Highway, Room 6F01, Hyattsville, MD 20782.

Dated: June 16, 2011.

Laura Carrico,

Director, Financial Accounting and Services Division, Financial Management Service.

[FR Doc. 2011–15851 Filed 6–23–11; 8:45 am]

BILLING CODE 4810–35–M

DEPARTMENT OF THE TREASURY

Fiscal Service

Surety Companies Acceptable on Federal Bonds; Change in State of Incorportation, Business Address and Phone; St. Paul Fire and Marine Insurance Company; St. Paul Guardian Insurance Company; St. Paul Mercury Insurance Company

AGENCY: Financial Management Service, Fiscal Service, Department of the Treasury.

ACTION: Notice.

SUMMARY: This is Supplement No. 11 to the Treasury Department Circular 570, 2010 Revision published July 1, 2010 at 75 FR 38192.

FOR FURTHER INFORMATION CONTACT: Surety Bond Branch at (202) 874–6850.

SUPPLEMENTARY INFORMATION: Notice is hereby given that St. Paul Fire and Marine Insurance Company (24767), St. Paul Guardian Insurance Company (24775) and St. Paul Mercury Insurance (24791) have redomesticated from the state of Minnesota to the state of Connecticut effective December 15, 2010. In addition, the above named companies have formally changed their ''Business Address'' and phone number to: BUSINESS ADDRESS: One Tower Square, Hartford, CT 06183. PHONE: (860) 277–0111.

Federal bond-approving officials should annotate their reference copies of the Treasury Department Circular 570 (''Circular''), 2010 Revision, to reflect these changes.

The Circular may be viewed and downloaded through the Internet at *http://www.fms.treas.gov/c570.*

Questions concerning this notice may be directed to the U.S. Department of the Treasury, Financial Management Service, Financial Accounting and Services Division, Surety Bond Branch, 3700 East-West Highway Room 6F01, Hyattsville, MD 20782.

Dated: June 16, 2011.

Laura Carrico,

Director, Financial Accounting and Services Division.

[FR Doc. 2011–15853 Filed 6–23–11; 8:45 am]

BILLING CODE 4810–35–M

DEPARTMENT OF THE TREASURY

Internal Revenue Service

Proposed Collection; Comment Request for Form 1099–R.

AGENCY: Internal Revenue Service (IRS), Treasury.

ACTION: Notice and request for comments.

SUMMARY: The Department of the Treasury, as part of its continuing effort to reduce paperwork and respondent burden, invites the general public and other Federal agencies to take this opportunity to comment on proposed and/or continuing information collections, as required by the Paperwork Reduction Act of 1995, Public Law 104–13 (44 U.S.C. 3506(c)(2)(A)). Currently, the IRS is soliciting comments concerning Form 1099–R, Distributions From Pensions, Annuities, Retirement or Profit-Sharing Plans, IRAs, Insurance Contracts, etc.

DATES: Written comments should be received on or before August 23, 2011 to be assured of consideration.

ADDRESSES: Direct all written comments to, Yvette B. Lawrence, Internal Revenue Service, Room 6129, 1111 Constitution Avenue, NW., Washington, DC 20224.

FOR FURTHER INFORMATION CONTACT: Requests for additional information or

copies of the form and instructions should be directed to, Joel Goldberger at (202), 927–9368, or at Internal Revenue Service, Room 6129, 1111 Constitution Avenue, NW., Washington, DC 20224, or the Internet, *Joel.P.Goldberger@irs.gov.*

SUPPLEMENTARY INFORMATION:

Title: Distributions From Pensions, Annuities, Retirement or Profit-Sharing Plans, IRAs, Insurance Contracts, etc.

OMB Number: 1545–0119.

Form Number: 1099–R.

Abstract: Form 1099–R is used to report distributions from pensions, annuities, profit-sharing or retirement plans, IRAs, and the surrender of insurance contracts. This information is used by the IRS to verify that income has been properly reported by the recipient.

Current Actions: There is a change in the current Form 1099–R from the Form 1099–R previously approved by the OMB, in that there are two new lines; number 10: Amount allocable to IRR within 5 years; number 11; First year of designated Roth contributions. Accordingly, there is an increase in the paperwork burden previously approved by OMB. We are requesting an increase in the burden hours of 1,870,454.

Type of Review: This is a revision of a currently approved collection.

Affected Public: Businesses or other for-profit organizations, not for-profit institutions, and Federal, state, local or tribal governments.

Estimated Number of Responses: 62,348,484.

Estimated Time per Response: 19.8 min.

Estimated Total Annual Burden Hours: 20,575,000.

The following paragraph applies to all of the collections of information covered by this notice:

An agency may not conduct or sponsor, and a person is not required to respond to, a collection of information unless the collection of information displays a valid OMB control number. Books or records relating to a collection of information must be retained as long as their contents may become material in the administration of any internal revenue law. Generally, tax returns and tax return information are confidential, as required by 26 U.S.C. 6103.

Request for Comments: Comments submitted in response to this notice will be summarized and/or included in the request for OMB approval. All comments will become a matter of public record. Comments are invited on: (a) Whether the collection of information is necessary for the proper performance of the functions of the agency, including whether the information shall have practical utility; (b) the accuracy of the agency's estimate of the burden of the collection of information; (c) ways to enhance the quality, utility, and clarity of the information to be collected; (d) ways to minimize the burden of the collection of information on respondents, including through the use of automated collection techniques or other forms of information technology; and (e) estimates of capital or start-up costs and costs of operation, maintenance, and purchase of services to provide information.

Approved: June 20, 2011.

R. Joseph Durbala,

IRS Reports Clearance Officer.

[FR Doc. 2011–15762 Filed 6–23–11; 8:45 am]

BILLING CODE P

DEPARTMENT OF THE TREASURY

Internal Revenue Service

Proposed Collection; Comment Request for Regulation Project

AGENCY: Internal Revenue Service (IRS), Treasury.

ACTION: Notice and request for comments.

SUMMARY: The Department of the Treasury, as part of its continuing effort to reduce paperwork and respondent burden, invites the general public and other Federal agencies to take this opportunity to comment on proposed and/or continuing information collections, as required by the Paperwork Reduction Act of 1995, Public Law 104–13 (44 U.S.C. 3506(c)(2)(A)). Currently, the IRS is soliciting comments concerning preparer penalties-manual signature requirement.

DATES: Written comments should be received on or before August 23, 2011 to be assured of consideration.

ADDRESSES: Direct all written comments to R. Joseph Durbala, Internal Revenue Service, Room 6129, 1111 Constitution Avenue, NW., Washington, DC 20224.

FOR FURTHER INFORMATION CONTACT: Requests for additional information or copies of the form and instructions should be directed to Evelyn J. Mack, at (202) 622–7381, or at Internal Revenue Service, Room 6231, 1111 Constitution Avenue, NW., Washington, DC 20224, or through the Internet, at *Evelyn.J.Mack@irs.gov.*

SUPPLEMENTARY INFORMATION:

Title: Preparer Penalties-Manual Signature Requirement (Sec. 1.6695–1(B)).

OMB Number: 1545–1385.

Regulation Project Numbers: GL–238–88 (TD 8549).

Abstract: This regulation provides that persons who prepare U.S. Fiduciary income tax returns for compensation may, under certain conditions, satisfy the manual signature requirements by using a facsimile signature. However, they will be required to submit to the IRS a list of the names and identifying numbers of all fiduciary returns which are being filed with a facsimile signature.

Current Actions: There is no change to this existing regulation.

Type of Review: Extension of a currently approved collection.

Affected Public: Business or other for-profit organizations.

Estimated Number of Respondents: 20,000.

Estimated Time Per Respondent: 1 hour, 17 min.

Estimated Total Annual Burden Hours: 25,825.

The following paragraph applies to all of the collections of information covered by this notice:

An agency may not conduct or sponsor, and a person is not required to respond to, a collection of information unless the collection of information displays a valid OMB control number. Books or records relating to a collection of information must be retained as long as their contents may become material in the administration of any internal revenue law. Generally, tax returns and tax return information are confidential, as required by 26 U.S.C. 6103.

Request for Comments: Comments submitted in response to this notice will be summarized and/or included in the request for OMB approval. All comments will become a matter of public record. Comments are invited on: (a) Whether the collection of information is necessary for the proper performance of the functions of the agency, including whether the information shall have practical utility; (b) the accuracy of the agency's estimate of the burden of the collection of information; (c) ways to enhance the quality, utility, and clarity of the information to be collected; (d) ways to minimize the burden of the collection of information on respondents, including through the use of automated collection techniques or other forms of information technology; and (e) estimates of capital or start-up costs and costs of operation, maintenance, and purchase of services to provide information.

Approved: June 21, 2011.

R. Joseph Durabala,

IRS Reports Clearance Officer.

[FR Doc. 2011–15937 Filed 6–23–11; 8:45 am]

BILLING CODE 4830–01–P

DEPARTMENT OF THE TREASURY

Internal Revenue Service

Proposed Collection; Comment Request for Form 6765

AGENCY: Internal Revenue Service (IRS), Treasury.

ACTION: Notice and request for comments.

SUMMARY: The Department of the Treasury, as part of its continuing effort to reduce paperwork and respondent burden, invites the general public and other Federal agencies to take this opportunity to comment on proposed and/or continuing information collections, as required by the Paperwork Reduction Act of 1995, Public Law 104–13 (44 U.S.C. 3506(c)(2)(A)). Currently, the IRS is soliciting comments concerning Form 6765, Credit for Increasing Research Activities.

DATES: Written comments should be received on or before August 23, 2011 to be assured of consideration.

ADDRESSES: Direct all written comments to R. Joseph Durbala, Internal Revenue Service, Room 6129, 1111 Constitution Avenue, NW., Washington, DC 20224.

FOR FURTHER INFORMATION CONTACT: Requests for additional information or copies of the form and instructions should be directed to Evelyn J. Mack at Internal Revenue Service, Room 6231, 1111 Constitution Avenue, NW., Washington, DC 20224, or at (202) 622–7381, or through the Internet at *Evelyn.J.Mack@irs.gov.*

SUPPLEMENTARY INFORMATION:

Title: Credit for Increasing Research Activities.

OMB Number: 1545–0619.

Form Number: 6765.

Abstract: IRC section 38 allows a credit against income tax (Determined under IRC section 41) for an increase in research activities in a trade or business. Form 6765 is used by businesses and individuals engaged in a trade or business to figure and report the credit. The data is used to verify that the credit claimed is correct.

Current Actions: Section 301(b) Public Law 110–343, Div. C, added new IRC sec. 41(h)(2), which eliminates the election of the alternative incremental credit (AIC) for taxable years beginning after December 31, 2008. Text has been revised to reflect the increased percentage for tax years ending after December 31, 2008. Changes, made to comply with the new IRC sec. 41(h)(2), will result in a total estimated burden decrease of 52,946 hours.

Type of Review: Revision of a currently approved collection.

Affected Public: Business or other for-profit organizations and individuals.

Estimated Number of Respondents: 15,805.

Estimated Time per Respondent: 18 hours, 2 minutes.

Estimated Total Annual Burden Hours: 285,281.

The following paragraph applies to all of the collections of information covered by this notice:

An agency may not conduct or sponsor, and a person is not required to respond to, a collection of information unless the collection of information displays a valid OMB control number. Books or records relating to a collection of information must be retained as long as their contents may become material in the administration of any internal revenue law. Generally, tax returns and tax return information are confidential, as required by 26 U.S.C. 6103.

Request for Comments: Comments submitted in response to this notice will be summarized and/or included in the request for OMB approval. All comments will become a matter of public record. Comments are invited on: (a) Whether the collection of information is necessary for the proper performance of the functions of the agency, including whether the information shall have practical utility; (b) the accuracy of the agency's estimate of the burden of the collection of information; (c) ways to enhance the quality, utility, and clarity of the information to be collected; (d) ways to minimize the burden of the collection of information on respondents, including through the use of automated collection techniques or other forms of information technology; and (e) estimates of capital or start-up costs and costs of operation, maintenance, and purchase of services to provide information.

Approved: June 20, 2011.

R. Joseph Durbala,

IRS Reports Clearance Officer.

[FR Doc. 2011–15939 Filed 6–23–11; 8:45 am]

BILLING CODE 4830–01–P

DEPARTMENT OF THE TREASURY

Internal Revenue Service

Open Meeting of Taxpayer Advocacy Panel Notice Improvement Project Committee

AGENCY: Internal Revenue Service (IRS), Treasury.

ACTION: Notice of meeting.

SUMMARY: An open meeting of the Taxpayer Advocacy Panel Notice Improvement Project Committee will be conducted. The Taxpayer Advocacy Panel is soliciting public comments, ideas and suggestions on improving customer service at the Internal Revenue Service.

DATES: The meeting will be held Thursday, August 4, 2011.

FOR FURTHER INFORMATION CONTACT: Audrey Y. Jenkins at 1–888–912–1227 or 718–488–2085.

SUPPLEMENTARY INFORMATION: Notice is hereby given pursuant to section 10(a)(2) of the Federal Advisory Committee Act, 5 U.S.C. App. (1988) that an open meeting of the Taxpayer Advocacy Panel Notice Improvement Project Committee will be held Thursday, August 4, 2011, 2 p.m. Eastern Time via telephone conference. The public is invited to make oral comments or submit written statements for consideration. Due to limited conference lines, notification of intent to participate must be made with Ms. Jenkins. For more information please contact Ms. Jenkins at 1–888–912–1227 or 718–488–2085, or write TAP Office, 10 MetroTech Center, 625 Fulton Street, Brooklyn, NY 11201, or post comments to the Web site: *http://www.improveirs.org.*

The agenda will include various IRS issues.

Dated: June 20, 2011.

Shawn Collins,

Director, Taxpayer Advocacy Panel.

[FR Doc. 2011–15925 Filed 6–23–11; 8:45 am]

BILLING CODE 4830–01–P

DEPARTMENT OF THE TREASURY

Internal Revenue Service

Open Meeting of the Taxpayer Advocacy Panel Small Business/Self Employed Correspondence Exam Toll Free Project Committee

AGENCY: Internal Revenue Service (IRS), Treasury.

ACTION: Notice of meeting.

SUMMARY: An open meeting of the Taxpayer Advocacy Panel Small

Business/Self Employed Correspondence Exam Toll Free Project Committee will be conducted. The Taxpayer Advocacy Panel is soliciting public comments, ideas, and suggestions on improving customer service at the Internal Revenue Service.

DATES: The meeting will be held Tuesday, August 23, 2011.

FOR FURTHER INFORMATION CONTACT: Timothy Shepard at 1–888–912–1227 or 206–220–6095.

SUPPLEMENTARY INFORMATION: Notice is hereby given pursuant to Section 10(a)(2) of the Federal Advisory Committee Act, 5 U.S.C. App. (1988) that an open meeting of the Taxpayer Advocacy Panel Small Business/Self Employed Correspondence Exam Toll Free Project Committee will be held Tuesday, August 23, 2011, at 9 a.m. Pacific Time via teleconference. The public is invited to make oral comments or submit written statements for consideration. Due to limited conference lines, notification of intent to participate must be made with Timothy Shepard. For more information please contact Mr. Shepard at 1–888–912–1227 or 206–220–6095, or write TAP Office, 915 2nd Avenue, MS W–406, Seattle, WA 98174 or post comments to the Web site: *http://www.improveirs.org.*

The agenda will include various IRS issues.

Dated: June 20, 2011.

Shawn Collins,

Director, Taxpayer Advocacy Panel.

[FR Doc. 2011–15935 Filed 6–23–11; 8:45 am]

BILLING CODE 4830–01–P

DEPARTMENT OF THE TREASURY

Internal Revenue Service

Open Meeting of the Area 6 Taxpayer Advocacy Panel (Including the States of Idaho, Iowa, Minnesota, Montana, Nebraska, North Dakota, Oregon, South Dakota, Utah, Washington, and Wyoming)

AGENCY: Internal Revenue Service (IRS), Treasury.

ACTION: Notice of meeting.

SUMMARY: An open meeting of the Area 6 Taxpayer Advocacy Panel will be conducted. The Taxpayer Advocacy Panel is soliciting public comment, ideas, and suggestions on improving customer service at the Internal Revenue Service.

DATES: The meeting will be held Wednesday, August 3, 2011.

FOR FURTHER INFORMATION CONTACT: Timothy Shepard at 1–888–912–1227 or 206–220–6095.

SUPPLEMENTARY INFORMATION: Notice is hereby given pursuant to Section 10(a)(2) of the Federal Advisory Committee Act, 5 U.S.C. App. (1988) that an open meeting of the Area 6 Taxpayer Advocacy Panel will be held Wednesday, August 3, 2011, at 11 a.m. Pacific Time via telephone conference. The public is invited to make oral comments or submit written statements for consideration. Due to limited conference lines, notification of intent to participate must be made with Timothy Shepard. For more information please contact Mr. Shepard at 1–888–912–1227 or 206–220–6095, or write TAP Office, 915 2nd Avenue, MS W–406, Seattle, WA 98174 or post comments to the Web site: *http://www.improveirs.org.*

The agenda will include various IRS issues.

Dated: June 20, 2011.

Shawn Collins,

Director, Taxpayer Advocacy Panel.

[FR Doc. 2011–15941 Filed 6–23–11; 8:45 am]

BILLING CODE 4830–01–P

DEPARTMENT OF THE TREASURY

Internal Revenue Service

Open Meeting of the Taxpayer Advocacy Panel Joint Committee

AGENCY: Internal Revenue Service (IRS), Treasury.

ACTION: Notice of meeting.

SUMMARY: An open meeting of the Taxpayer Advocacy Panel Joint Committee will be conducted. The Taxpayer Advocacy Panel is soliciting public comments, ideas, and suggestions on improving customer service at the Internal Revenue Service.

DATES: The meeting will be held Thursday, August 25, 2011.

FOR FURTHER INFORMATION CONTACT: Susan Gilbert at 1–888–912–1227 or (515) 564–6638.

SUPPLEMENTARY INFORMATION: Notice is hereby given pursuant to Section 10(a)(2) of the Federal Advisory Committee Act, 5 U.S.C. App. (1988) that an open meeting of the Taxpayer Advocacy Panel Joint Committee will be held Thursday, August 25, 2011, 2 p.m. Eastern Time via teleconference. The public is invited to make oral comments or submit written statements for consideration. Notification of intent to participate must be made with Susan Gilbert. For more information please contact Ms. Gilbert at 1–888–912–1227 or (515) 564–6638 or write: TAP Office, 210 Walnut Street, Stop 5115, Des Moines, IA 50309 or contact us at the Web site: *http://www.improveirs.org.*

The agenda will include various IRS issues.

Dated: June 20, 2011.

Shawn Collins,

Director, Taxpayer Advocacy Panel.

[FR Doc. 2011–15920 Filed 6–23–11; 8:45 am]

BILLING CODE 4830–01–P

DEPARTMENT OF THE TREASURY

Internal Revenue Service

Open Meeting of the Taxpayer Advocacy Panel Volunteer Income Tax Assistance Project Committee

AGENCY: Internal Revenue Service (IRS), Treasury.

ACTION: Notice of meeting.

SUMMARY: An open meeting of the Taxpayer Advocacy Panel Volunteer Income Tax Assistance Project Committee will be conducted. The Taxpayer Advocacy Panel is soliciting public comments, ideas, and suggestions on improving customer service at the Internal Revenue Service.

DATES: The meeting will be held Tuesday, August 9, 2011.

FOR FURTHER INFORMATION CONTACT: Donna Powers at 1–888–912–1227 or 954–423–7977.

SUPPLEMENTARY INFORMATION: Notice is hereby given pursuant to Section 10(a)(2) of the Federal Advisory Committee Act, 5 U.S.C. App. (1988) that a meeting of the Taxpayer Advocacy Panel Volunteer Income Tax Assistance Project Committee will be held Tuesday, August 9, 2011, 2 p.m. Eastern Time via telephone conference. The public is invited to make oral comments or submit written statements for consideration. Due to limited conference lines, notification of intent to participate must be made with Donna Powers. For more information please contact Ms. Powers at 1–888–912–1227 or 954–423–7977, or write TAP Office, 1000 South Pine Island Road, Suite 340, Plantation, FL 33324, or contact us at the Web site: *http://www.improveirs.org.*

The agenda will include various IRS Issues.

Dated: June 20, 2011.

Shawn Collins,

Director, Taxpayer Advocacy Panel.

[FR Doc. 2011–15952 Filed 6–23–11; 8:45 am]

BILLING CODE 4830–01–P

DEPARTMENT OF THE TREASURY

Internal Revenue Service

Open Meeting of the Area 1 Taxpayer Advocacy Panel (Including the States of New York, New Jersey, Connecticut, Massachusetts, Rhode Island, New Hampshire, Vermont and Maine)

AGENCY: Internal Revenue Service (IRS), Treasury.

ACTION: Notice of meeting.

SUMMARY: An open meeting of the Area 1 Taxpayer Advocacy Panel will be conducted. The Taxpayer Advocacy Panel is soliciting public comments, ideas and suggestions on improving customer service at the Internal Revenue Service.

DATES: The meeting will be held Tuesday, August 9, 2011.

FOR FURTHER INFORMATION CONTACT: Marisa Knispel at 1–888–912–1227 or 718–488–3557.

SUPPLEMENTARY INFORMATION: Notice is hereby given pursuant to section 10(a)(2) of the Federal Advisory Committee Act, 5 U.S.C. App. (1988) that an open meeting of the Area 1 Taxpayer Advocacy Panel will be held Tuesday, August 9, 2011, at 10 a.m. Eastern Time via telephone conference. The public is invited to make oral comments or submit written statements for consideration. Due to limited conference lines, notification of intent to participate must be made with Marisa Knispel. For more information please contact Ms. Knispel at 1–888–912–1227 or 718–488–3557, or write TAP Office, 10 MetroTech Center, 625 Fulton Street, Brooklyn, NY 11201, or contact us at the Web site: *http://www.improveirs.org.*

The agenda will include various IRS issues.

Dated: June 20, 2011.

Shawn Collins,

Director, Taxpayer Advocacy Panel.

[FR Doc. 2011–15950 Filed 6–23–11; 8:45 am]

BILLING CODE 4830–01–P

DEPARTMENT OF THE TREASURY

Internal Revenue Service

Open meeting of the Area 2 Taxpayer Advocacy Panel (Including the States of Delaware, North Carolina, South Carolina, Maryland, Pennsylvania, Virginia, West Virginia, and the District of Columbia)

AGENCY: Internal Revenue Service (IRS), Treasury.

ACTION: Notice of meeting.

SUMMARY: An open meeting of the Area 2 Taxpayer Advocacy Panel will be conducted. The Taxpayer Advocacy Panel is soliciting public comments, ideas, and suggestions on improving customer service at the Internal Revenue Service.

DATES: The meeting will be held Wednesday, August 17, 2011.

FOR FURTHER INFORMATION CONTACT: Audrey Y. Jenkins at 1–888–912–1227 or 718–488–2085.

SUPPLEMENTARY INFORMATION: Notice is hereby given pursuant to section 10(a)(2) of the Federal Advisory Committee Act, 5 U.S.C. App. (1988) that an open meeting of the Area 2 Taxpayer Advocacy Panel will be held Wednesday, August 17, 2011, at 2:30 p.m. Eastern Time via telephone conference. The public is invited to make oral comments or submit written statements for consideration. Due to limited conference lines, notification of intent to participate must be made with Audrey Jenkins. For more information please contact Ms. Jenkins at 1–888–912–1227 or 718–488–2085, or write TAP Office, 10 MetroTech Center, 625 Fulton Street, Brooklyn, NY 11201, or post comments to the Web site: *http://www.improveirs.org.*

The agenda will include various IRS issues.

Dated: June 20, 2011.

Shawn Collins,

Director, Taxpayer Advocacy Panel.

[FR Doc. 2011–15949 Filed 6–23–11; 8:45 am]

BILLING CODE 4830–01–P

DEPARTMENT OF THE TREASURY

Internal Revenue Service

Open Meeting of the Area 3 Taxpayer Advocacy Panel (Including the States of Alabama, Georgia, Florida, Louisiana, Mississippi, Tennessee, and Puerto Rico)

AGENCY: Internal Revenue Service (IRS), Treasury.

ACTION: Notice of meeting.

SUMMARY: An open meeting of the Area 3 Taxpayer Advocacy Panel will be conducted. The Taxpayer Advocacy Panel is soliciting public comments, ideas, and suggestions on improving customer service at the Internal Revenue Service.

DATES: The meeting will be held Wednesday, August 3, 2011.

FOR FURTHER INFORMATION CONTACT: Donna Powers at 1–888–912–1227 or 954–423–7977.

SUPPLEMENTARY INFORMATION: Notice is hereby given pursuant to Section 10(a)(2) of the Federal Advisory Committee Act, 5 U.S.C. App. (1988) that a meeting of the Area 3 Taxpayer Advocacy Panel will be held Wednesday, August 3, 2011, at 3:30 p.m. Eastern Time via telephone conference. The public is invited to make oral comments or submit written statements for consideration. Due to limited conference lines, notification of intent to participate must be made with Donna Powers. For more information please contact Ms. Powers at 1–888–912–1227 or 954–423–7977, or write TAP Office, 1000 South Pine Island Road, Suite 340, Plantation, FL 33324, or post comments to the Web site: *http://www.improveirs.org.*

The agenda will include various IRS issues.

Dated: June 20, 2011.

Shawn Collins,

Director, Taxpayer Advocacy Panel .

[FR Doc. 2011–15947 Filed 6–23–11; 8:45 am]

BILLING CODE 4830–01–P

DEPARTMENT OF THE TREASURY

Internal Revenue Service

Open Meeting of the Area 4 Taxpayer Advocacy Panel (Including the States of Illinois, Indiana, Kentucky, Michigan, Ohio, and Wisconsin)

AGENCY: Internal Revenue Service (IRS), Treasury.

ACTION: Notice of meeting.

SUMMARY: An open meeting of the Area 4 Taxpayer Advocacy Panel will be conducted. The Taxpayer Advocacy Panel is soliciting public comments, ideas, and suggestions on improving customer service at the Internal Revenue Service.

DATES: The meeting will be held Tuesday, August 16, 2011.

FOR FURTHER INFORMATION CONTACT: Ellen Smiley at 1–888–912–1227 or 414–231–2360.

SUPPLEMENTARY INFORMATION: Notice is hereby given pursuant to Section 10(a)(2) of the Federal Advisory Committee Act, 5 U.S.C. App. (1988) that a meeting of the Area 4 Taxpayer Advocacy Panel will be held Tuesday, August 16, 2011, at 1 p.m. Central Time via telephone conference. The public is invited to make oral comments or submit written statements for consideration. Due to limited conference lines, notification of intent to participate must be made with Ellen Smiley. For more information please

contact Ms. Smiley at 1–888–912–1227 or 414–231–2360, or write TAP Office Stop 1006MIL, 211 West Wisconsin Avenue, Milwaukee, WI 53203–2221, or post comments to the Web site: *http://www.improveirs.org.*

The agenda will include various IRS issues.

Dated: June 20, 2011.

Shawn Collins,

Director, Taxpayer Advocacy Panel.

[FR Doc. 2011–15945 Filed 6–23–11; 8:45 am]

BILLING CODE 4830–01–P

DEPARTMENT OF THE TREASURY

Internal Revenue Service

Open Meeting of the Area 5 Taxpayer Advocacy Panel (Including the States of Arizona, Arkansas, Colorado, Kansas, New Mexico, Missouri, Oklahoma, and Texas)

AGENCY: Internal Revenue Service (IRS), Treasury.

ACTION: Notice of meeting.

SUMMARY: An open meeting of the Area 5 Taxpayer Advocacy Panel will be conducted. The Taxpayer Advocacy Panel is soliciting public comments, ideas, and suggestions on improving customer service at the Internal Revenue Service.

DATES: The meeting will be held Thursday, August 18, 2011.

FOR FURTHER INFORMATION CONTACT: Patricia Robb at 1–888–912–1227 or 414–231–2360.

SUPPLEMENTARY INFORMATION: Notice is hereby given pursuant to Section 10(a)(2) of the Federal Advisory Committee Act, 5 U.S.C. App. (1988) that a meeting of the Area 5 Taxpayer Advocacy Panel will be held Thursday, August 18, 2011, at 11:30 a.m. Central Time via telephone conference. The public is invited to make oral comments or submit written statements for consideration. Due to limited conference lines, notification of intent to participate must be made with Patricia Robb. For more information please contact Ms. Robb at 1–888–912–1227 or 414–231–2360, or write TAP Office Stop 1006MIL, 211 West Wisconsin Avenue, Milwaukee, WI 53203–2221, or post comments to the Web site: *http://www.improveirs.org.*

The agenda will include various IRS issues.

Dated: June 20, 2011.

Shawn Collins,

Director, Taxpayer Advocacy Panel.

[FR Doc. 2011–15944 Filed 6–23–11; 8:45 am]

BILLING CODE 4830–01–P

DEPARTMENT OF THE TREASURY

Internal Revenue Service

Open Meeting of the Area 7 Taxpayer Advocacy Panel (Including the States of Alaska, California, Hawaii, and Nevada)

AGENCY: Internal Revenue Service (IRS), Treasury.

ACTION: Notice of meeting.

SUMMARY: An open meeting of the Area 7 Taxpayer Advocacy Panel will be conducted. The Taxpayer Advocacy Panel is soliciting public comments, ideas, and suggestions on improving customer service at the Internal Revenue Service.

DATES: The meeting will be held Thursday, August 18, 2011.

FOR FURTHER INFORMATION CONTACT: Janice Spinks at 1–888–912–1227 or 206–220–6098.

SUPPLEMENTARY INFORMATION: Notice is hereby given pursuant to Section 10(a)(2) of the Federal Advisory Committee Act, 5 U.S.C. App. (1988) that a meeting of the Area 7 Taxpayer Advocacy Panel will be held Thursday, August 18, 2011, at 2 p.m. Pacific Time via telephone conference. The public is invited to make oral comments or submit written statements for consideration. Due to limited conference lines, notification of intent to participate must be made with Janice Spinks. For more information please contact Ms. Spinks at 1–888–912–1227 or 206–220–6098, or write TAP Office, 915 2nd Avenue, MS W–406, Seattle, WA 98174 or post comments to the Web site: *http://www.improveirs.org.*

The agenda will include various IRS issues.

Dated: June 20, 2011.

Shawn Collins,

Director, Taxpayer Advocacy Panel.

[FR Doc. 2011–15940 Filed 6–23–11; 8:45 am]

BILLING CODE 4830–01–P

DEPARTMENT OF THE TREASURY

Internal Revenue Service

Open Meeting of the Taxpayer Advocacy Panel Earned Income Tax Credit Project Committee

AGENCY: Internal Revenue Service (IRS), Treasury.

ACTION: Notice of meeting.

SUMMARY: An open meeting of the Taxpayer Advocacy Panel Earned Income Tax Credit Project Committee will be conducted. The Taxpayer Advocacy Panel is soliciting public comments, ideas and suggestions on improving customer service at the Internal Revenue Service.

DATES: The meeting will be held Monday, August 22, 2011.

FOR FURTHER INFORMATION CONTACT: Marianne Ayala at 1–888–912–1227 or 954–423–7978.

SUPPLEMENTARY INFORMATION: Notice is hereby given pursuant to Section 10(a)(2) of the Federal Advisory Committee Act, 5 U.S.C. App. (1988) that an open meeting of the Taxpayer Advocacy Panel Earned Income Tax Credit Project Committee will be held Monday, August 22, 2011, at 3 p.m. Eastern Time via telephone conference. The public is invited to make oral comments or submit written statements for consideration. Due to limited conference lines, notification of intent to participate must be made with Marianne Ayala. For more information please contact Ms. Ayala at 1–888–912–1227 or 954–423–7978, or write TAP Office, 1000 South Pine Island Road, Suite 340, Plantation, FL 33324, or contact us at the Web site: *http://www.improveirs.org.*

The agenda will include various IRS issues.

Dated: June 20, 2011.

Shawn Collins,

Director, Taxpayer Advocacy Panel.

[FR Doc. 2011–15938 Filed 6–23–11; 8:45 am]

BILLING CODE 4830–01–P

DEPARTMENT OF THE TREASURY

Internal Revenue Service

Open Meeting of the Taxpayer Advocacy Panel Taxpayer Assistance Center Project Committee

AGENCY: Internal Revenue Service (IRS), Treasury.

ACTION: Notice of meeting.

SUMMARY: An open meeting of the Taxpayer Advocacy Panel Taxpayer Assistance Center Project Committee will be conducted. The Taxpayer Advocacy Panel is soliciting public comments, ideas, and suggestions on improving customer service at the Internal Revenue Service.

DATES: The meeting will be held Tuesday, August 23, 2011.

FOR FURTHER INFORMATION CONTACT: Ellen Smiley at 1–888–912–1227 or 414–231–2360.

SUPPLEMENTARY INFORMATION: Notice is hereby given pursuant to Section 10(a)(2) of the Federal Advisory Committee Act, 5 U.S.C. App. (1988)

that an open meeting of the Taxpayer Advocacy Panel Taxpayer Assistance Center Project Committee will be held Tuesday, August 23, 2011 at 2 p.m. Central Time via telephone conference. The public is invited to make oral comments or submit written statements for consideration. Due to limited conference lines, notification of intent to participate must be made with Ms. Ellen Smiley. For more information please contact Ms. Smiley at 1–888–912–1227 or 414–231–2360, or write TAP Office Stop 1006MIL, 211 West Wisconsin Avenue, Milwaukee, WI 53203–2221, or post comments to the Web site: *http://www.improveirs.org.*

The agenda will include various IRS issues.

Dated: June 20, 2011.

Shawn Collins,

Director, Taxpayer Advocacy Panel.

[FR Doc. 2011–15936 Filed 6–23–11; 8:45 am]

BILLING CODE 4830–01–P

DEPARTMENT OF THE TREASURY

Internal Revenue Service

Open Meeting of the Taxpayer Advocacy Panel Small Business/Self Employed Correspondence Exam Practitioner Engagement Project Committee

AGENCY: Internal Revenue Service (IRS), Treasury.

ACTION: Notice of meeting.

SUMMARY: An open meeting of the Taxpayer Advocacy Panel Small Business/Self Employed Correspondence Exam Practitioner Engagement Project Committee will be conducted. The Taxpayer Advocacy Panel is soliciting public comments, ideas, and suggestions on improving customer service at the Internal Revenue Service.

DATES: The meeting will be held Tuesday, August 2, 2011.

FOR FURTHER INFORMATION CONTACT: Janice Spinks at 1–888–912–1227 or 206–220–6098.

SUPPLEMENTARY INFORMATION: Notice is hereby given pursuant to Section 10(a)(2) of the Federal Advisory Committee Act, 5 U.S.C. App. (1988) that an open meeting of the Taxpayer Advocacy Panel Small Business/Self Employed Correspondence Exam Practitioner Engagement Project Committee will be held Tuesday, August 2, 2011, at 9 a.m. Pacific Time via telephone conference. The public is invited to make oral comments or submit written statements for consideration. Due to limited conference lines, notifications of intent to participate must be made with Ms. Janice Spinks. For more information please contact Ms. Spinks at 1–888–912–1227 or 206–220–6098, or write TAP Office, 915 2nd Avenue, MS W–406, Seattle, WA 98174 or post comments to the Web site*: http://www.improveirs.org.*

The agenda will include various IRS issues.

Dated: June 20, 2011.

Shawn Collins.

Director, Taxpayer Advocacy Panel.

[FR Doc. 2011–15934 Filed 6–23–11; 8:45 am]

BILLING CODE 4830–01–P

DEPARTMENT OF THE TREASURY

Internal Revenue Service

Open Meeting of the Taxpayer Advocacy Panel Tax Forms and Publications Project Committee

AGENCY: Internal Revenue Service (IRS), Treasury.

ACTION: Notice of meeting.

SUMMARY: An open meeting of the Taxpayer Advocacy Panel Tax Forms and Publications Project Committee will be conducted. The Taxpayer Advocacy Panel is soliciting public comments, ideas and suggestions on improving customer service at the Internal Revenue Service.

DATES: The meeting will be held Tuesday, August 9, 2011.

FOR FURTHER INFORMATION CONTACT: Marisa Knispel at 1–888–912–1227 or 718–488–3557

SUPPLEMENTARY INFORMATION: Notice is hereby given pursuant to section 10(a)(2) of the Federal Advisory Committee Act, 5 U.S.C. App. (1988) that an open meeting of the Taxpayer Advocacy Panel Tax Forms and Publications Project Committee will be held Tuesday, August 9, 2011, at 2 p.m. Eastern Time via telephone conference. The public is invited to make oral comments or submit written statements for consideration. Due to limited conference lines, notification of intent to participate must be made with Ms. Knispel. For more information please contact Ms. Knispel at 1–888–912–1227 or 718–488–3557, or write TAP Office, 10 MetroTech Center, 625 Fulton Street, Brooklyn, NY 11201, or post comments to the Web site: *http://www.improveirs.org.*

The agenda will include various IRS issues.

Dated: June 20, 2011.

Shawn Collins,

Director, Taxpayer Advocacy Panel.

[FR Doc. 2011–15919 Filed 6–23–11; 8:45 am]

BILLING CODE 4830–01–P

FEDERAL REGISTER

Vol. 76 Friday,

No. 122 June 24, 2011

Part II

Department of Veterans Affairs

38 CFR Part 17

Reimbursement Offsets for Medical Care or Services; Final Rule

DEPARTMENT OF VETERANS AFFAIRS

38 CFR Part 17

RIN 2900–AN55

Reimbursement Offsets for Medical Care or Services

AGENCY: Department of Veterans Affairs.

ACTION: Final rule.

SUMMARY: This document amends the regulations of the Department of Veterans Affairs (VA) concerning the reimbursement of medical care and services delivered to veterans for nonservice-connected conditions. This rule applies in situations where third-party payers are required to reimburse VA for costs related to care provided by VA to a veteran covered under the third-party payer's plan. This final rule adds a new section barring offsets by third-party payers and requires that third-party payers submit a request for a refund for claims when there is an alleged overpayment.

DATES: *Effective Date:* July 25, 2011.

FOR FURTHER INFORMATION CONTACT: Anthony Norris, Program Analyst, Business Operations, Chief Business Office (168), Veterans Health Administration, Department of Veterans Affairs, 810 Vermont Avenue, NW., Washington, DC 20420, (202) 461–1593. (This is not a toll free number.)

SUPPLEMENTARY INFORMATION: Pursuant to 38 U.S.C. 1729, a third-party payer, such as a private medical insurer, has an obligation to pay the United States reasonable charges for the cost of medical care or services furnished to a veteran for a nonservice-connected disability when the veteran or the provider of the care or services would otherwise be eligible to receive payment for such medical care from the third-party payer. The obligation to pay is to the extent that the beneficiary would be eligible to receive such reimbursement or indemnification from the third-party payer if the beneficiary were to incur the costs on the beneficiary's own behalf. VA's authority under section 1729 is generally implemented in 38 CFR 17.101 through 17.105.

As a matter of common business practice, third-party payers who are (or who believe that they are) owed a refund from VA based on an overpayment often recoup such money by unilaterally offsetting a future payment amount to VA. As a purchaser and provider of care, VA medical centers incur these unilateral offsets in the ordinary course of their business. An offset occurs when the payer, alleging that it made an earlier overpayment to VA, reduces or takes back the alleged overpayment by withholding payment owed to VA on an unrelated debt transaction. In an attempt to recoup the overpayment, the payer seldom associates the reduced payment with the alleged overpaid claim. These unilateral offsets by third-party payers disrupt VA accounting practices and present certain challenges to VA in managing third-party collections and evaluating account receivables for deficient payments. Further, such practices eliminate VA's opportunity to validate the alleged overpayment and pursue proper review, if deemed appropriate given the circumstances.

In a document published in the **Federal Register** on October 8, 2010 (75 FR 62348), we proposed to amend VA's regulations concerning the reimbursement of medical care and services delivered to veterans for nonservice-connected conditions to address reimbursement offsets. In the proposed rule we explained that the changes are consistent with regulations promulgated by the Department of Defense (DoD) in 32 CFR Part 220. DoD's collection statute, 10 U.S.C. 1095, is similar to VA's collection statute, 38 U.S.C. 1729. We intended that the proposed rule would clarify VA's interpretation of the statute. The purpose of the proposed rule is to proscribe offsetting by third-party payers, provide clarity and uniformity in how third-party payers interact with both VA and DOD, and eliminate disruptions to VA accounting, collections, and account receivables. We provided a 60-day comment-period, which ended on December 7, 2010. We received 3 comments, one from the general public and two from within the health insurance industry.

One commenter agreed with our proposed rule and suggested that addressing third-party recovery of costs in this rule is an appropriate response to third-parties unilaterally offsetting payments. This commenter stated that the proposed rule would allow VA to efficiently track accounts without the complications caused by third-party offsets. The commenter asked whether the ''system will work in reverse'' if the third-party owes VA money. The commenter also asked whether third-party payers will be able to check the status of a request for reimbursement based upon an alleged overpayment. Finally, the commenter asked how long the process would take from the third party's submission of the claim seeking reimbursement from VA for alleged overpayments to receipt of reimbursement.

Although the time to process third-party claims seeking reimbursement from VA for alleged overpayments will vary based on numerous factors such as the complexity of the claim and the sufficiency of the information submitted with the claim, most claims will be processed within 90 days. Our 90-day estimate is based upon current VA practice and claim-processing times. The third-party payer will have a payee address on file for each VA facility or Consolidated Patient Account Center (CPAC), and would use that contact information for written follow-up inquiries, or the third-party payer may communicate with the VA facility or CPAC through more direct means, such as telephone or e-mail.

This commenter's questions suggest a possible misunderstanding concerning the scope of our proposal. We did not propose to establish an entirely new process for third parties seeking reimbursement from VA for alleged overpayments. Rather, we proposed to clarify the rules regarding VA collections and to require third-party payers to present any alleged overpayment claim to VA rather than unilaterally offsetting money owed to VA. To further clarify the purpose of this rulemaking, we have changed the heading for § 17.106 from ''Third-party claims for refunds based on amounts previously paid to the Department of Veterans Affairs (overpayments)'' to ''VA collection rules; third-party payers.'' We made no further changes to the rule based upon these comments.

Two commenters from within the health insurance industry asserted that the rule, in particular the language in § 17.106(a)(1), is not authorized by 38 U.S.C. 1729. The commenters' position is that VA providers must meet the same timely filing rules insurers require of commercial or other providers or members in their coverage contracts, and argue that the rule would override insurers own time limits for filing claims applicable to providers. We disagree.

Although beneficiaries of health insurers generally must file a claim for reimbursement within a specified period of time in order to seek reimbursement, the statutory authority granted to VA by Congress does not place such a time limit on VA's right to seek reimbursement from third-parties. This is clearly set forth in 38 U.S.C. 1729(f), which states that ''[n]o provision of any contract or other agreement, shall operate to prevent recovery or collection by the United States under this section or with respect

to care or services furnished under section 1784 of this title.'' Therefore, we make no changes based on this comment.

Pursuant to 38 U.S.C. 1729(a)(1), VA's right to recover or collect from a third-party reasonable charges for medical care or services provided to a veteran is limited ''to the extent that the veteran (or the provider of the care or services) would be eligible to receive payment for such care or services from such third party if the care or services had not been furnished by [VA].'' Under section 1729(b)(2)(C), the United States has the authority to institute proceedings to collect such payment within six years after the medical care or services were provided. We do not interpret these statutory provisions to be inconsistent. As reflected in the proposed and final rule text, we interpret the ''extent'' language in paragraph (a)(1) to refer to the amount for which VA may seek payment. In other words, VA cannot seek payment from the third-party that would be greater than what would be provided to another health care provider. This is consistent with the other provisions in both the statute and the regulation. For example, both the statute and the regulation preclude VA from collecting the amount of any applicable deductibles (38 U.S.C. 1729(a)(3); 38 CFR 17.106(b)(2)); and both the statute and regulation limit the amount subject to collection to ''reasonable charges,'' which are defined by statute as ''the amount that [the] third party demonstrates * * * it would pay for the care or services if provided by [non-VA] facilities in the same geographic area'' (38 U.S.C. 1729(c)(1)(B)), and which VA calculates using 38 CFR 17.101. Thus, the restriction on when VA can collect the amount due is not limited by the ''extent'' language in 38 U.S.C. 1729(a)(1). We do not interpret section 1729(a)(1) as binding VA to the internal processing rules of third parties.

The commenters argue that the right of the United States to institute a collection action within six years applies only to lawsuits that the United States may bring against the third-party payer, but does not purport to allow VA to disregard insurers' timely filing rules applicable to providers. In response, we first point out that 38 U.S.C. 1729(f) prescribes that ''[n]o law of any State or of any political subdivision of a State, and no provision of any contract or other agreement, shall operate to prevent recovery or collection by the United States under this section or with respect to care or services furnished under [38 U.S.C. 1784].'' This means that the United States is not bound by third-parties' rules and policies. Indeed, third-party rules on timely filing differ within individual insurance plans, and may be changed by the third-party without VA's consent and without notice to Congress. Congress did not intend to bind VA to varying, unpredictable policies over which VA has no control or input.

The commenters' objections also seem to be that the statute gives the right of a cause of action to the ''United States'' and not specifically to VA. We disagree. We interpret ''United States'' as used by Congress in section 1729 to mean an action by the Federal government on behalf of a Federal department or agency. This final rule implements that interpretation in § 17.106(c)(1).

We also note that VA will make every effort to collect payments from a third-party in a timely manner, and has no intention of waiting six years to do so. However, there may be occasions when VA will be unable to do so within a particular time limitation established by a particular third-party. The imposition of a timely filing requirement by third parties is inconsistent with 38 U.S.C. 1729(f), which proscribes contract provisions that would operate to prevent VA collections. If a third-party denies payment on such a ground, the United States is then authorized to institute legal proceedings—so long as the proceeding is instituted within the six-year limit. Thus, the assignment of the right to the United States, rather than to VA, to institute a cause of action is a distinction without a difference. Any legal action to collect payments would be instituted by VA, and such action would be instituted only after the third-party has denied payment.

One commenter requested that VA revise § 17.106(c)(4), which prohibits a third-party payer from offsetting other claims due to the VA in order to recover an overpayment. The commenter recommended instead that the rule state that VA facilities and insurers may agree to permit offsets in lieu of a separate appeal and adjudication process. Similarly, another commenter stated that when a third-party offsets overpayments against amounts otherwise due a VA facility, the third-party is treating the VA facility like any other health care provider. The commenter asserted that VA has no legal right to seek a higher standing. We do not agree.

As stated in the preamble to the proposed rule, one of the primary goals of this rulemaking is to prohibit a third-party payer from offsetting payments to VA. Under 38 U.S.C. 1729(a)(1), VA has the right to recover or collect reasonable charges for care or services from third-party payers. The right to collect reasonable charges is not dependent upon a third-party payer's contention regarding a previous alleged overpayment. It is consistent with the statute to bar a third-party payer from offsetting a claim based on a different, disputed transaction. Moreover, under 38 U.S.C. 1729(c)(1), the authority to compromise a claim rests with the government, not with the payer. Without the consent of the government, a third-party payer cannot compromise a claim premised on some separate disputed transaction. Therefore, a third-party payer must submit a claim for a refund of monies allegedly owed to it and with sufficient specificity for VA to determine whether a third-party is due a refund. In doing so, VA will improve its accountability of payments and provide uniformity throughout the VA medical system. We make no changes based on this comment.

Two commenters also requested that we delete proposed paragraph (f)(2)(iv), which reads ''[t]he lack of a participation agreement or the absence of privity of contract between a third-party payer and VA is not a permissible ground for refusing or reducing third-party payment.'' One commenter stated that under the proposed rule, preferred provider organization (PPO) plans would be required to reimburse VA facilities as preferred providers even if they have not entered into the same preferred provider agreement. The other industry commenter stated that since a PPO would not reimburse a non-preferred private provider as if it were preferred, the PPO need not treat a VA facility with which it does not have a preferred provider agreement as if it were a preferred provider. To the extent that the commenters appear to be disputing the amounts of payments owed to VA under this rule, there is simply no difference between the types of third-parties involved. The ''reasonable charges'' calculation will be made regardless of whether the payment is owed by a health maintenance organization (HMO), PPO, or any other type of health plan, for the reasons explained above. As previously stated, VA does not expect payment from a third-party, regardless of whether the payment is owed by a HMO, PPO, or any other type of third-party payer, that is greater than what the third-party would pay to a non-federal health care provider in the same geographic area. We make no changes based on this comment.

Similar comments on this topic appear to dispute the range of services for which VA may seek reimbursement. A commenter argued that since an

exclusive provider organization (EPO) would not generally pay claims submitted by an out-of-network private provider, the EPO is not required under the statute to pay an out-of-network VA facility. The commenter asserted that the proposed rule, which noted that a third-party payer must pay only to the extent covered by the payer's plan, supported the commenter's view.

The full discussion of this matter in the proposed rule clearly indicates that we expect HMOs not to exclude claims or refuse to certify emergent care that would otherwise be covered by the plan, and that opt-out or point-of-service options also may not be used to exclude such services. See 75 FR 62351. However, if the HMO bars coverage for services provided by facilities not associated with the HMO, we would not expect the HMO to reimburse VA for those services. The extent of a HMO-like limitation would depend on the provisions in the EPO's specific plan and such provisions may not seek to only exclude payment of claims for medical care and services furnished by a department or agency of the United States. Moreover, we note that Congress clearly expressed its intent in 38 U.S.C. 1729(f) that ''[n]o provision of any contract or other agreement, shall operate to prevent recovery or collection by the United States.'' In 38 U.S.C. 1729(i)(1)(a), Congress clearly defined a ''health-plan contract'' and only excluded Medicare and Medicaid from the definition as beyond VA's collection authority. We make no changes based on this comment.

Based on the rationale set forth in the preamble to the proposed rule and in this preamble, VA is adopting the proposed rule as a final rule with the minor change noted above.

Effect of Rulemaking

Title 38 of the Code of Federal Regulations, as revised by this final rule, represents VA's implementation of its legal authority on this subject. Other than future amendments to this regulation or governing statutes, no contrary rules or procedures are authorized. All existing or subsequent VA guidance must be read to conform with this final rule if possible or, if not possible, such guidance is superseded by this rulemaking.

Executive Order 12866

Executive Order 12866 directs agencies to assess all costs and benefits of available regulatory alternatives and, when regulation is necessary, to select regulatory approaches that maximize net benefits (including potential economic, environmental, public health and safety, and other advantages; distributive impacts; and equity). The Executive Order classifies a regulatory action as a ''significant regulatory action,'' requiring review by the Office of Management and Budget (OMB) unless OMB waives such review, as any regulatory action that is likely to result in a rule that may: (1) Have an annual effect on the economy of $100 million or more or adversely affect in a material way the economy, a sector of the economy, productivity, competition, jobs, the environment, public health or safety, or State, local, or tribal governments or communities; (2) create a serious inconsistency or otherwise interfere with an action taken or planned by another agency; (3) materially alter the budgetary impact of entitlements, grants, user fees, or loan programs or the rights and obligations of recipients thereof; or (4) raise novel legal or policy issues arising out of legal mandates, the President's priorities, or the principles set forth in the Executive Order.

The economic, interagency, budgetary, legal, and policy implications of this final rule have been examined and it has been determined not to be a significant regulatory action under Executive Order 12866.

Unfunded Mandates

The Unfunded Mandates Reform Act of 1995 requires, at 2 U.S.C. 1532, that agencies prepare an assessment of anticipated costs and benefits before issuing any rule that may result in expenditure by State, local, or tribal governments, in the aggregate, or by the private sector, of $100 million or more (adjusted annually for inflation) in any given year. This final rule will have no such effect on State, local, and tribal governments, or on the private sector.

Paperwork Reduction Act

The document contains no provisions constituting a collection of information under the Paperwork Reduction Act (44 U.S.C. 3501–3520).

Regulatory Flexibility Act

The Secretary hereby certifies that this final rule will not have a significant economic impact on a substantial number of small entities as they are defined in the Regulatory Flexibility Act, 5 U.S.C. 601–612. This final rule will have an insignificant impact on large insurance companies and other large entities. Therefore, pursuant to 5 U.S.C. 605(b), this proposed amendment is exempt from the initial and final regulatory flexibility analysis requirements of sections 603 and 604.

Catalog of Federal Domestic Assistance Numbers

The Catalog of Federal Domestic Assistance numbers and titles are 64.009 Veterans Medical Care Benefits, 64.010 Veterans Nursing Home Care and 64.011 Veterans Dental Care.

Signing Authority

The Secretary of Veterans Affairs, or designee, approved this document and authorized the undersigned to sign and submit the document to the Office of the Federal Register for publication electronically as an official document of the Department of Veterans Affairs. John R. Gingrich, Chief of Staff, Department of Veterans Affairs, approved this document on June 9, 2011, for publication.

List of Subjects in 38 CFR Part 17

Administrative practice and procedure, Alcohol abuse, Alcoholism, Claims, Day care, Dental health, Drug abuse, Foreign relations, Government contracts, Grant programs-health, Government programs-veterans, Health care, Health facilities, Health professions, Health records, Homeless, Medical and dental schools, Medical devices, Medical research, Mental health programs, Nursing home care, Veterans.

Dated: June 21, 2011.

Robert C. McFetridge,

Director, Office of Regulation Policy and Management, Office of the General Counsel, Department of Veterans Affairs.

For the reasons stated in the preamble, VA amends 38 CFR part 17 as follows:

PART 17—MEDICAL

■ 1. The authority citation for part 17 continues to read as follows:

Authority: 38 U.S.C. 501, and as noted in specific sections.

§ 17.106 [Redesignated as § 17.107]

■ 2. Redesignate § 17.106 as § 17.107.

■ 3. Add new § 17.106 before the undesignated center heading ''Disciplinary Control of Beneficiaries Receiving Hospital, Domiciliary or Nursing Home Care'' to read as follows:

§ 17.106 VA collection rules; third-party payers.

(a)(1) *General rule.* VA has the right to recover or collect reasonable charges from a third-party payer for medical care and services provided for a nonservice-connected disability in or through any VA facility to a veteran who is also a beneficiary under the third-party payer's plan. VA's right to recover or collect is limited to the extent

that the beneficiary or a nongovernment provider of care or services would be eligible to receive reimbursement or indemnification from the third-party payer if the beneficiary were to incur the costs on the beneficiary's own behalf.

(2) *Definitions.* For the purposes of this section:

Automobile liability insurance means insurance against legal liability for health and medical expenses resulting from personal injuries arising from operation of a motor vehicle. Automobile liability insurance includes:

(A) Circumstances in which liability benefits are paid to an injured party only when the insured party's tortious acts are the cause of the injuries; and

(B) Uninsured and underinsured coverage, in which there is a third-party tortfeasor who caused the injuries (i.e., benefits are not paid on a no-fault basis), but the insured party is not the tortfeasor.

Health-plan contract means any plan, policy, program, contract, or liability arrangement that provides compensation, coverage, or indemnification for expenses incurred by a beneficiary for medical care or services, items, products, and supplies. It includes but is not limited to:

(A) Any plan offered by an insurer, reinsurer, employer, corporation, organization, trust, organized health care group or other entity.

(B) Any plan for which the beneficiary pays a premium to an issuing agent as well as any plan to which the beneficiary is entitled as a result of employment or membership in or association with an organization or group.

(C) Any Employee Retirement Income and Security Act (ERISA) plan.

(D) Any Multiple Employer Trust (MET).

(E) Any Multiple Employer Welfare Arrangement (MEWA).

(F) Any Health Maintenance Organization (HMO) plan, including any such plan with a point-of-service provision or option.

(G) Any individual practice association (IPA) plan.

(H) Any exclusive provider organization (EPO) plan.

(I) Any physician hospital organization (PHO) plan.

(J) Any integrated delivery system (IDS) plan.

(K) Any management service organization (MSO) plan.

(L) Any group or individual medical services account.

(M) Any participating provider organization (PPO) plan or any PPO provision or option of any third-party payer plan.

(N) Any Medicare supplemental insurance plan.

(O) Any automobile liability insurance plan.

(P) Any no fault insurance plan, including any personal injury protection plan or medical payments benefit plan for personal injuries arising from the operation of a motor vehicle.

Medicare supplemental insurance plan means an insurance, medical service or health-plan contract primarily for the purpose of supplementing an eligible person's benefit under Medicare. The term has the same meaning as ''Medicare supplemental policy'' in section 1882(g)(1) of the Social Security Act (42 U.S.C. 1395, *et seq.*) and 42 CFR part 403, subpart B.

No-fault insurance means an insurance contract providing compensation for medical expenses relating to personal injury arising from the operation of a motor vehicle in which the compensation is not premised on who may have been responsible for causing such injury. No-fault insurance includes personal injury protection and medical payments benefits in cases involving personal injuries resulting from operation of a motor vehicle.

Participating provider organization means any arrangement in a third-party payer plan under which coverage is limited to services provided by a select group of providers who are members of the PPO or incentives (for example, reduced copayments) are provided for beneficiaries under the plan to receive health care services from the members of the PPO rather than from other providers who, although authorized to be paid, are not included in the PPO. However, a PPO does not include any organization that is recognized as a health maintenance organization.

Third-party payer means an entity, other than the person who received the medical care or services at issue (first party) and VA who provided the care or services (second party), responsible for the payment of medical expenses on behalf of a person through insurance, agreement or contract. This term includes, but is not limited to the following:

(A) State and local governments that provide such plans other than Medicaid.

(B) Insurance underwriters or carriers.

(C) Private employers or employer groups offering self-insured or partially self-insured medical service or health plans.

(D) Automobile liability insurance underwriter or carrier.

(E) No fault insurance underwriter or carrier.

(F) Workers' compensation program or plan sponsor, underwriter, carrier, or self-insurer.

(G) Any other plan or program that is designed to provide compensation or coverage for expenses incurred by a beneficiary for healthcare services or products.

(H) A third-party administrator.

(b) *Calculating reasonable charges.* (1) The ''reasonable charges'' subject to recovery or collection by VA under this section are calculated using the applicable method for such charges established by VA in 38 CFR 17.101.

(2) If the third-party payer's plan includes a requirement for a deductible or copayment by the beneficiary of the plan, VA will recover or collect reasonable charges less that deductible or copayment amount.

(c) *VA's right to recover or collect is exclusive.* The only way for a third-party payer to satisfy its obligation under this section is to pay the VA facility or other authorized representative of the United States. Payment by a third-party payer to the beneficiary does not satisfy the third-party's obligation under this section.

(1) Pursuant to 38 U.S.C. 1729(b)(2), the United States may file a claim or institute and prosecute legal proceedings against a third-party payer to enforce a right of the United States under 38 U.S.C. 1729 and this section. Such filing or proceedings must be instituted within six years after the last day of the provision of the medical care or services for which recovery or collection is sought.

(2) An authorized representative of the United States may compromise, settle or waive a claim of the United States under this section.

(3) The remedies authorized for collection of indebtedness due the United States under 31 U.S.C. 3701, *et seq.,* 4 CFR parts 101 through 104, 28 CFR part 11, 31 CFR part 900, and 38 CFR part 1, are available to effect collections under this section.

(4) A third-party payer may not, without the consent of a U.S. Government official authorized to take action under 38 U.S.C. 1729 and this part, offset or reduce any payment due under 38 U.S.C. 1729 or this part on the grounds that the payer considers itself due a refund from a VA facility. A written request for a refund must be submitted and adjudicated separately from any other claims submitted to the third-party payer under 38 U.S.C. 1729 or this part.

(d) *Assignment of benefits or other submission by beneficiary not necessary.* The obligation of the third-party payer to pay is not dependent

upon the beneficiary executing an assignment of benefits to the United States. Nor is the obligation to pay dependent upon any other submission by the beneficiary to the third-party payer, including any claim or appeal. In any case in which VA makes a claim, appeal, representation, or other filing under the authority of this part, any procedural requirement in any third-party payer plan for the beneficiary of such plan to make the claim, appeal, representation, or other filing must be deemed to be satisfied. A copy of the completed VA Form 10–10EZ or VA Form 10–10EZR that includes a veteran's insurance declaration will be provided to payers upon request, in lieu of a claimant's statement or coordination of benefits form.

(e) *Preemption of conflicting State laws and contracts.* Any provision of a law or regulation of a State or political subdivision thereof and any provision of any contract or agreement that purports to establish any requirement on a third-party payer that would have the effect of excluding from coverage or limiting payment for any medical care or services for which payment by the third-party payer under 38 U.S.C. 1729 or this part is required, is preempted by 38 U.S.C. 1729(f) and shall have no force or effect in connection with the third-party payer's obligations under 38 U.S.C. 1729 or this part.

(f) *Impermissible exclusions by third-party payers.* (1) *Statutory requirement.* Under 38 U.S.C. 1729(f), no provision of any third-party payer's plan having the effect of excluding from coverage or limiting payment for certain care if that care is provided in or through any VA facility shall operate to prevent collection by the United States.

(2) *General rules.* The following are general rules for the administration of 38 U.S.C. 1729 and this part, with examples provided for clarification. The examples provided are not exclusive. A third-party payer may not reduce, offset, or request a refund for payments made to VA under the following conditions:

(i) Express exclusions or limitations in third-party payer plans that are inconsistent with 38 U.S.C. 1729 are inoperative. For example, a provision in a third-party payer's plan that purports to disallow or limit payment for services provided by a government entity or paid for by a government program (or similar exclusion) is not a permissible ground for refusing or reducing third-party payment.

(ii) No objection, precondition or limitation may be asserted that defeats the statutory purpose of collecting from third-party payers. For example, a provision in a third-party payer's plan that purports to disallow or limit payment for services for which the patient has no obligation to pay (or similar exclusion) is not a permissible ground for refusing or reducing third-party payment.

(iii) Third-party payers may not treat claims arising from services provided in or through VA facilities less favorably than they treat claims arising from services provided in other hospitals. For example, no provision of an employer sponsored program or plan that purports to make ineligible for coverage individuals who are eligible to receive VA medical care and services shall be permissible.

(iv) The lack of a participation agreement or the absence of privity of contract between a third-party payer and VA is not a permissible ground for refusing or reducing third-party payment.

(v) A provision in a third-party payer plan, other than a Medicare supplemental plan, that seeks to make Medicare the primary payer and the plan the secondary payer or that would operate to carve out of the plan's coverage an amount equivalent to the Medicare payment that would be made if the services were provided by a provider to whom payment would be made under Part A or Part B of Medicare is not a permissible ground for refusing or reducing payment as the primary payer to VA by the third-party payer unless the provision expressly disallows payment as the primary payer to all providers to whom payment would not be made under Medicare (including payment under Part A, Part B, a Medicare HMO, or a Medicare Advantage plan).

(vi) A third-party payer may not refuse or reduce third-party payment to VA because VA's claim form did not report hospital acquired conditions (HAC) or present on admission conditions (POA). VA is exempt from the Medicare Inpatient prospective payment system and the Medicare rules for reporting POA or HAC information to third-party payers.

(vii) Health Maintenance Organizations (HMOs) may not exclude claims or refuse to certify emergent and urgent services provided within the HMO's service area or otherwise covered non-emergency services provided out of the HMO's service area. In addition, opt-out or point-of-service options available under an HMO plan may not exclude services otherwise payable under 38 U.S.C. 1729 or this part.

(g) *Records.* Pursuant to 38 U.S.C. 1729(h), VA shall make available for inspection and review to representatives of third-party payers, from which the United States seeks payment, recovery, or collection under 38 U.S.C. 1729, appropriate health care records (or copies of such records) of patients. However, the appropriate records will be made available only for the purposes of verifying the care and services which are the subject of the claim(s) for payment under 38 U.S.C. 1729, and for verifying that the care and services met the permissible criteria of the terms and conditions of the third-party payer's plan. Patient care records will not be made available under any other circumstances to any other entity. VA will not make available to a third-party payer any other patient or VA records.

(Authority: 31 U.S.C. 3711, 38 U.S.C. 501, 1729, 42 U.S.C. 2651)

[FR Doc. 2011–15854 Filed 6–23–11; 8:45 am]

BILLING CODE 8320–01–P

FEDERAL REGISTER

Vol. 76 Friday,

No. 122 June 24, 2011

Part III

Department of the Treasury

Internal Revenue Service

26 CFR Part 54

Department of Labor

Employee Benefits Security Administration

29 CFR Part 2590

Department of Health and Human Services

45 CFR Part 147

Group Health Plans and Health Insurance Issuers: Rules Relating to Internal Claims and Appeals and External Review Processes; Final Rule

DEPARTMENT OF THE TREASURY

Internal Revenue Service

26 CFR Part 54

[TD 9532]

RIN 1545–BK30

DEPARTMENT OF LABOR

Employee Benefits Security Administration

29 CFR Part 2590

RIN 1210–AB45

DEPARTMENT OF HEALTH AND HUMAN SERVICES

[CMS–9993–IFC2]

45 CFR Part 147

RIN 0938–AQ66

Group Health Plans and Health Insurance Issuers: Rules Relating to Internal Claims and Appeals and External Review Processes

AGENCIES: Internal Revenue Service, Department of the Treasury; Employee Benefits Security Administration, Department of Labor; Centers for Medicare & Medicaid Services, Department of Health and Human Services.

ACTION: Amendment to interim final rules with request for comments.

SUMMARY: This document contains amendments to interim final regulations implementing the requirements regarding internal claims and appeals and external review processes for group health plans and health insurance coverage in the group and individual markets under provisions of the Affordable Care Act. These rules are intended to respond to feedback from a wide range of stakeholders on the interim final regulations and to assist plans and issuers in coming into full compliance with the law through an orderly and expeditious implementation process.

DATES: *Effective date.* This amendment to the interim final regulations is effective on July 22, 2011.

Comment date. Comments are due on or before July 25, 2011.

ADDRESSES: Written comments may be submitted to any of the addresses specified below. Any comment that is submitted to any Department will be shared with the other Departments. Please do not submit duplicates.

All comments will be made available to the public. *Warning:* Do not include any personally identifiable information (such as name, address, or other contact information) or confidential business information that you do not want publicly disclosed. All comments may be posted on the Internet and can be retrieved by most Internet search engines. Comments may be submitted anonymously.

Department of Labor. Comments to the Department of Labor, identified by RIN 1210–AB45, by one of the following methods:

• *Federal eRulemaking Portal: http://www.regulations.gov.* Follow the instructions for submitting comments.

• *E-mail: E-OHPSCA2719amend.EBSA@dol.gov.*

• *Mail or Hand Delivery:* Office of Health Plan Standards and Compliance Assistance, Employee Benefits Security Administration, Room N–5653, U.S. Department of Labor, 200 Constitution Avenue, NW., Washington, DC 20210, *Attention:* RIN 1210–AB45.

Comments received by the Department of Labor will be posted without change to *http://www.regulations.gov* and *http://www.dol.gov/ebsa,* and available for public inspection at the Public Disclosure Room, N–1513, Employee Benefits Security Administration, 200 Constitution Avenue, NW., Washington, DC 20210.

Department of Health and Human Services. In commenting, please refer to file code CMS–9993–IFC2. Because of staff and resource limitations, we cannot accept comments by facsimile (FAX) transmission.

You may submit comments in one of four ways (please choose only one of the ways listed):

1. *Electronically.* You may submit electronic comments on this regulation to *http://www.regulations.gov.* Follow the instructions under the ''More Search Options'' tab.

2. *By regular mail.* You may mail written comments to the following address ONLY: Centers for Medicare & Medicaid Services, Department of Health and Human Services, Attention: CMS–9993–IFC2, P.O. Box 8010, Baltimore, MD 21244–8010.

Please allow sufficient time for mailed comments to be received before the close of the comment period.

3. *By express or overnight mail.* You may send written comments to the following address ONLY: Centers for Medicare & Medicaid Services, Department of Health and Human Services, Attention: CMS–9993–IFC2, Mail Stop C4–26–05, 7500 Security Boulevard, Baltimore, MD 21244–1850.

4. *By hand or courier.* If you prefer, you may deliver (by hand or courier) your written comments before the close of the comment period to either of the following addresses:

a. For delivery in Washington, DC—Centers for Medicare & Medicaid Services, Department of Health and Human Services, Room 445–G, Hubert H. Humphrey Building, 200 Independence Avenue, SW., Washington, DC 20201.

(Because access to the interior of the Hubert H. Humphrey Building is not readily available to persons without Federal government identification, commenters are encouraged to leave their comments in the CMS drop slots located in the main lobby of the building. A stamp-in clock is available for persons wishing to retain a proof of filing by stamping in and retaining an extra copy of the comments being filed.)

b. For delivery in Baltimore, MD—Centers for Medicare & Medicaid Services, Department of Health and Human Services, 7500 Security Boulevard, Baltimore, MD 21244–1850.

If you intend to deliver your comments to the Baltimore address, please call telephone number (410) 786–9994 in advance to schedule your arrival with one of our staff members.

Comments mailed to the addresses indicated as appropriate for hand or courier delivery may be delayed and received after the comment period.

Internal Revenue Service. Comments to the IRS, identified by REG–125592–10, by one of the following methods:

• *Federal eRulemaking Portal: http://www.regulations.gov.* Follow the instructions for submitting comments.

• *Mail:* CC:PA:LPD:PR (REG–125592–10), Room 5205, Internal Revenue Service, P.O. Box 7604, Ben Franklin Station, Washington, DC 20044.

• *Hand or courier delivery:* Monday through Friday between the hours of 8 a.m. and 4 p.m. to: CC:PA:LPD:PR (REG–125592–10), Courier's Desk, Internal Revenue Service, 1111 Constitution Avenue, NW., Washington, DC 20224.

All submissions to the IRS will be open to public inspection and copying in Room 1621, 1111 Constitution Avenue, NW., Washington, DC from 9 a.m. to 4 p.m.

FOR FURTHER INFORMATION CONTACT: Amy Turner or Beth Baum, Employee Benefits Security Administration, Department of Labor, at (202) 693–8335; Karen Levin, Internal Revenue Service, Department of the Treasury, at (202) 622–6080; Ellen Kuhn, Centers for Medicare & Medicaid Services, Department of Health and Human Services, at (301) 492–4100.

Customer Service Information: Individuals interested in obtaining

information from the Department of Labor concerning employment-based health coverage laws may call the EBSA Toll-Free Hotline at 1–866–444–EBSA (3272) or visit the Department of Labor's Web site (*http://www.dol.gov/ebsa*). In addition, information from HHS on private health insurance for consumers can be found on the Centers for Medicare & Medicaid Services (CMS) Web site (*http://www.cms.hhs.gov/HealthInsReformforConsume/01_Overview.asp*). Information on health reform can be found at *http://www.healthcare.gov.*

SUPPLEMENTARY INFORMATION:

I. Background

The Patient Protection and Affordable Care Act, Public Law 111–148, was enacted on March 23, 2010; the Health Care and Education Reconciliation Act, Public Law 111–152, was enacted on March 30, 2010 (collectively known as the ''Affordable Care Act''). The Affordable Care Act reorganizes, amends, and adds to the provisions in part A of title XXVII of the Public Health Service Act (PHS Act) relating to group health plans and health insurance issuers in the group and individual markets. The term ''group health plan'' includes both insured and self-insured group health plans.[1] The Affordable Care Act adds section 715(a)(1) to the Employee Retirement Income Security Act (ERISA) and section 9815(a)(1) to the Internal Revenue Code (the Code) to incorporate the provisions of part A of title XXVII of the PHS Act into ERISA and the Code, and make them applicable to group health plans, and health insurance issuers providing health insurance coverage in connection with group health plans. The PHS Act sections incorporated by this reference are sections 2701 through 2728. PHS Act sections 2701 through 2719A are substantially new, though they incorporate some provisions of prior law. PHS Act sections 2722 through 2728 are sections of prior law renumbered, with some, mostly minor, changes.

On July 23, 2010, the Departments of Health and Human Services (HHS), Labor, and the Treasury (the Departments) issued interim final regulations implementing PHS Act section 2719 at 75 FR 43330 (July 2010 regulations), regarding internal claims and appeals and external review processes for group health plans and health insurance issuers offering coverage in the group and individual markets. The requirements of PHS Act section 2719 and the July 2010 regulations do not apply to grandfathered health plans under section 1251 of the Affordable Care Act.[2]

A. Internal Claims and Appeals

With respect to internal claims and appeals processes for group health plans and health insurance issuers offering group health insurance coverage, PHS Act section 2719 provides that plans and issuers must initially incorporate the internal claims and appeals processes set forth in regulations promulgated by the Department of Labor (DOL) at 29 CFR 2560.503–1 (the DOL claims procedure regulation) and update such processes in accordance with standards established by the Secretary of Labor. Similarly, with respect to internal claims and appeals processes for individual health insurance coverage, issuers must initially incorporate the internal claims and appeals processes set forth in applicable State law and update such processes in accordance with standards established by the Secretary of HHS.

The July 2010 regulations provided such updated standards for compliance and invited comment on the updated standards. In particular, the July 2010 regulations provided the following additional standards[3] for internal claims and appeals processes:

1. The scope of adverse benefit determinations eligible for internal claims and appeals includes a rescission of coverage (whether or not the rescission has an adverse effect on any particular benefit at the time).[4]

2. Notwithstanding the rule in the DOL claims procedure regulation that provides for notification in the case of urgent care claims[5] not later than 72 hours after the receipt of the claim, a plan or issuer must notify a claimant of a benefit determination (whether adverse or not) with respect to a claim involving urgent care as soon as possible, taking into account the medical exigencies, but not later than 24 hours after the receipt of the claim by the plan or issuer.[6]

3. Clarifications with respect to full and fair review, such that plans and issuers are clearly required to provide the claimant (free of charge) with new or additional evidence considered, relied upon, or generated by (or at the direction of) the plan or issuer in connection with the claim, as well as any new or additional rationale for a denial at the internal appeals stage, and a reasonable opportunity for the claimant to respond to such new evidence or rationale.

4. Clarifications regarding conflicts of interest, such that decisions regarding hiring, compensation, termination, promotion, or other similar matters with respect to an individual, such as a claims adjudicator or medical expert, must not be based upon the likelihood that the individual will support the denial of benefits.

5. Notices must be provided in a culturally and linguistically appropriate manner, as required by the statute, and as set forth in paragraph (e) of the July 2010 regulations.

6. Notices to claimants must provide additional content. Specifically:

a. Any notice of adverse benefit determination or final internal adverse benefit determination must include information sufficient to identify the claim involved, including the date of the service, the health care provider, the claim amount (if applicable), the diagnosis code and its corresponding meaning, and the treatment code and its corresponding meaning.

[1] The term ''group health plan'' is used in title XXVII of the PHS Act, part 7 of ERISA, and chapter 100 of the Code, and is distinct from the term ''health plan'', as used in other provisions of title I of the Affordable Care Act. The term ''health plan'', as used in those provisions, does not include self-insured group health plans.

[2] The Departments published interim final regulations implementing section 1251 of the Affordable Care Act on June 17, 2010, at 75 FR 34538, as amended on November 17, 2010 at 75 FR 70114.

[3] To address certain relevant differences in the group and individual markets, the July 2010 regulations provided that health insurance issuers offering individual health insurance coverage must comply with three additional requirements for internal claims and appeals processes. First, the July 2010 regulations include initial eligibility determinations in the individual market within the scope of claims eligible for internal appeals. Second, health insurance issuers offering individual health insurance coverage are permitted only one level of internal appeal. Third, health insurance issuers offering individual health insurance coverage must maintain all records of claims and notices associated with internal claims and appeals for six years and must make these records available for examination by the claimant, State or Federal oversight agency. 75 FR 43330, 43334 (July 23, 2010).

[4] This definition is broader than the definition in the DOL claims procedure regulation, which provides that a denial, reduction, or termination of, or a failure to provide payment (in whole or in part) for a benefit is an adverse benefit determination eligible for internal claims and appeals processes.

[5] A claim involving urgent care is generally a claim for medical care or treatment with respect to which the application of the time periods for making non-urgent care determinations could seriously jeopardize the life or health of the claimant or the ability of the claimant to regain maximum function; or, in the opinion of the physician with knowledge of the claimant's medical condition, would subject the claimant to severe pain that cannot be adequately managed without the care or treatment that is the subject of the claim.

[6] Under the July 2010 regulations, there is a special exception if the claimant fails to provide sufficient information to determine whether, or to what extent, benefits are covered or payable under the plan.

b. The plan or issuer must ensure that the reason or reasons for an adverse benefit determination or final internal adverse benefit determination includes the denial code and its corresponding meaning, as well as a description of the plan's or issuer's standard, if any, that was used in denying the claim. In the case of a final internal adverse benefit determination, this description must also include a discussion of the decision.

c. The plan or issuer must provide a description of available internal appeals and external review processes, including information regarding how to initiate an appeal.

d. The plan or issuer must disclose the availability of, and contact information for, an applicable office of health insurance consumer assistance or ombudsman established under PHS Act section 2793.

7. If a plan or issuer fails to strictly adhere to all the requirements of the July 2010 regulations, the claimant is deemed to have exhausted the plan's or issuer's internal claims and appeals process, regardless of whether the plan or issuer asserts that it has substantially complied, and the claimant may initiate any available external review process or remedies available under ERISA or under State law.

On September 20, 2010, based on a preliminary review of comments from stakeholders which indicated that they believed more time was needed to come into compliance with PHS Act section 2719 and the additional internal claims and appeal standards in the July 2010 regulations, the Department of Labor issued Technical Release 2010–02 (T.R. 2010–02), which set forth an enforcement grace period until July 1, 2011 for compliance with certain new provisions with respect to internal claims and appeals.[7]

Specifically, T.R. 2010–02 set forth an enforcement grace period until July 1, 2011 with respect to standard #2 above (regarding the timeframe for making urgent care claims decisions), standard #5 above (regarding providing notices in a culturally and linguistically appropriate manner), standard #6 above (requiring broader content and specificity in notices), and standard #7 above (regarding exhaustion). T.R. 2010–02 also stated that, during that period, the Department of Labor and the Internal Revenue Service (IRS) would not take any enforcement action against a group health plan, and HHS would not take any enforcement action against a self-funded nonfederal governmental health plan that is working in good faith to implement such additional standards but does not yet have them in place.[8]

Based on further review of the comments received on the July 2010 regulations and T.R. 2010–02, and other feedback from interested stakeholders, on March 18, 2011, the Department of Labor issued Technical Release 2011–01[9] (T.R. 2011–01), which modified and extended the enforcement grace period set forth in T.R. 2010–02. Specifically, T.R. 2011–01 extended the enforcement grace period until plan years beginning on or after January 1, 2012 with respect to standard #2 above (regarding the timeframe for making urgent care claims decisions), standard #5 above (regarding providing notices in a culturally and linguistically appropriate manner), and standard #7 above (regarding exhaustion). Moreover, whereas T.R. 2010–02 required plans to be working in good faith to implement such standards for the enforcement grace period to apply, T.R. 2011–01 stated that no such requirement would apply for either the extended or the original enforcement grace period.

With respect to standard #6 above (requiring broader content and specificity in notices), T.R. 2011–01 extended the enforcement grace period only in part. Specifically, with respect to the requirement to disclose diagnosis codes and treatment codes (and their corresponding meanings), T.R. 2011–01 extended the enforcement grace period until plan years beginning on or after January 1, 2012.[10] With respect to the other disclosure requirements of standard #6, the enforcement grace period was extended from July 1, 2011 until the first day of the first plan year beginning on or after July 1, 2011 (which is January 1, 2012 for calendar year plans), affecting: (a) The disclosure of information sufficient to identify a claim (other than the diagnosis and treatment information), (b) the reasons for an adverse benefit determination, (c) the description of available internal appeals and external review processes, and (d) for plans and issuers in States in which an office of health consumer assistance program or ombudsman is operational, the disclosure of the availability of, and contact information for, such program.[11]

T.R. 2011–01 also stated the Departments' intent to issue an amendment to the July 2010 regulations that would take into account comments and other feedback received from stakeholders and make modifications to certain provisions of the July 2010 regulations. T.R. 2011–01 went on to state that the relief was intended to act as a bridge until an amendment to the July 2010 regulations was issued.

This amendment to the July 2010 regulations makes changes with respect to the provisions subject to the enforcement grace period under T.R. 2011–01. At the expiration of the enforcement grace period, the Departments will begin enforcing the relevant requirements of the July 2010 regulations, as amended by this rulemaking.

B. External Review

1. Applicability of Federal and State External Review Processes

PHS Act section 2719, the July 2010 regulations, and technical guidance issued by the Departments[12] provide a system with respect to applicability of either a State external review process or a Federal external review process for non-grandfathered plans and issuers. How this impacts plans and issuers varies, depending on the type of coverage:

a. Self-insured plans subject to ERISA and/or the Code.

In the case of self-insured plans subject to ERISA and/or the Code, a

[7] Technical Release 2010–02 is available at *http://www.dol.gov/ebsa/pdf/ACATechnicalRelease2010-02.pdf.* HHS published a corresponding guidance document, available at: *http://cciio.cms.gov/resources/files/interim_procedures_for_internal_claims_and_appeals.pdf.*

[8] T.R. 2010–02 also stated that HHS was encouraging States to provide similar grace periods with respect to issuers and HHS would not cite a State for failing to substantially enforce the provisions of part A of title XXVII of the PHS Act in these situations.

[9] T.R. 2011–01 is available at *http://www.dol.gov/ebsa/pdf/tr11-01.pdf.*

[10] Information related to diagnosis and treatment codes (and/or their meanings) is, however, generally required to be provided to claimants upon request under existing DOL claims procedures. *See* 29 CFR 2560.503–1(h)(2)(iii), which is also applicable to plans (whether or not they are ERISA plans) and issuers that are not grandfathered health plans pursuant to paragraph (b)(2)(i) of the July 2010 regulations. Nevertheless, a request for such information, in itself, should not be considered to be a request for (and therefore trigger the start of) an internal appeal or external review.

[11] Any enforcement grace period with respect to disclosure requirements that has been provided under T.R. 2010–02 or T.R. 2011–01 does not affect disclosure requirements still in effect for ERISA plans under the DOL claims procedure regulation and/or Part 1 of ERISA.

[12] See DOL Technical Release 2010–01, available at *http://www.dol.gov/ebsa/pdf/ACATechnicalRelease2010-01.pdf;* HHS Technical Guidance issued August 26, 2010, available at *http://cciio.cms.gov/resources/files/interim_appeals_guidance.pdf;* and HHS Technical Guidance issued September 23, 2010, available at *http://cciio.cms.gov/resources/files/technical_guidance_for_self_funded_non_fed_plans.pdf.* Additional clarifications were provided in the form of frequently-asked questions (FAQs), available at *http://www.dol.gov/ebsa/faqs/faq-aca.html* and *http://cciio.cms.gov/resources/factsheets/aca_implementation_faqs.html#claims.*

Federal external review process supervised by DOL and Treasury applies (the ''private accredited IRO process'' [13]). On August 23, 2010, the Department of Labor issued Technical Release 2010–01 (T.R. 2010–01), which set forth an interim enforcement safe harbor for self-insured plans not subject to a State external review process or to the HHS-supervised process (the ''HHS-administered process'').[14] This interim enforcement safe harbor essentially permits a private contract process under which plans contract with accredited independent review organizations (IROs) to perform reviews. Separate guidance being issued contemporaneous with the publication of this amendment makes adjustments to, and provides clarifications regarding, the operation of the private accredited IRO process.

b. *Insured coverage.*

In the case of health insurance issuers in the group and individual market, the July 2010 regulations set forth 16 minimum consumer protections based on the Uniform External Review Model Act promulgated by the National Association of Insurance Commissioners (NAIC) that, if provided by a State external review process, will result in the State's process applying in lieu of a Federal external review process. Moreover, for insured group health plans, as provided under paragraph (c)(1) of the July 2010 regulations, if a State external review process applies to and is binding on the plan's health insurance issuer under paragraph (c) of the July 2010 regulations (regarding State standards for external review), then the insured group health plan is not required to comply with either the State external review process or the Federal external review process. The July 2010 regulations provided a transition period for plan years (in the individual market, policy years) beginning before July 1, 2011, during which any existing State external review process will be considered sufficient (and will apply to health insurance issuers in that State). During the transition period, in States and territories without an existing State external review process (Alabama, Mississippi, Nebraska, Guam, American Samoa, U.S. Virgin Islands and the Northern Mariana Islands), HHS guidance generally provided that health insurance issuers will participate in the HHS-administered process. As explained later in this preamble, this amendment to the July 2010 regulations modifies the transition period originally issued as part of the July 2010 regulations so that the last day of the transition period for all health insurance issuers offering group and individual health insurance coverage is December 31, 2011.

In addition, the July 2010 regulations provided that, following the conclusion of the transition period, health insurance issuers in a State that does not meet the minimum consumer protection standards set forth in paragraph (c) of the July 2010 regulations will participate in an external review process under Federal standards similar to the process under the NAIC Uniform Model Act, such as the HHS-administered process. Separate guidance being issued contemporaneous with the publication of this amendment announces standards under which, until January 1, 2014, a State may also operate such an external review process under Federal standards similar to the process under the NAIC Uniform Model Act (an ''NAIC-similar process''). Accordingly, if HHS determines that a State has neither implemented the minimum consumer protections required under paragraph (c) of the July 2010 regulations, nor an NAIC-similar process, issuers in the State will have the choice of participating in either the HHS-administered process or the private accredited IRO process. HHS is adopting this approach to permit States to operate their external review processes under standards established by the Secretary until January 1, 2014, avoiding unnecessary disruption, while States work to adopt an ''NAIC-parallel process,'' consistent with the consumer protections set forth in paragraph (c) of the July 2010 regulations.

c. Self-insured, nonfederal governmental plans.

For self-insured, nonfederal governmental plans (which are subject to the PHS Act, but not ERISA or the Code), previous HHS guidance generally provided that they follow the private accredited IRO process.[15] (In States and territories that did not have an existing external review process (Alabama, Mississippi, Nebraska, Guam, American Samoa, U.S. Virgin Islands and the Northern Mariana Islands), previous HHS guidance generally provided that such plans may choose to follow the HHS-administered process or follow the private accredited IRO process.) Separate guidance being issued contemporaneous with the publication of this amendment generally treats self-insured nonfederal governmental plans the same as health insurance issuers. That is, a State may temporarily operate such an external review process applicable to a self-insured nonfederal governmental plan under Federal standards similar to the process under the NAIC Uniform Model Act. If no such State-operated process exists, self-insured nonfederal governmental plans have the choice of participating in either the HHS-administered process or the private accredited IRO process.

2. Scope of Claims Eligible for External Review

While the process varies depending on the type of coverage, so does the scope of claims eligible for external review. That is, for insurance coverage and self-insured nonfederal governmental plans subject to a State external review process (either an NAIC-parallel process or an NAIC-similar process), the State determines the scope of claims eligible for external review.[16] For coverage subject to either the HHS-administered process or the private accredited IRO process, the July 2010 regulations provided that any adverse benefit determination (or final internal adverse benefit determination) could be reviewed unless it is related to a participant's or beneficiary's failure to meet the requirements for eligibility under the terms of a group health plan. As explained later in this preamble, this amendment to the July 2010 regulations modifies the scope of claims eligible for

[13] For simplicity, the Federal external review process for self-insured plans subject to ERISA and/or the Code supervised by DOL and Treasury is referred to as the ''private accredited IRO process'' throughout this preamble. However, the interim procedures for Federal external review issued as DOL Technical Release 2010–01 also recognizes that States may choose to expand access to their State external review process to plans not subject to applicable State laws (such as self-insured ERISA plans) and allows those plans to meet their responsibilities to provide external review under PHS Act section 2719(b) by voluntarily complying with the provisions of that State external review process.

[14] HHS Technical Guidance issued August 26, 2010 provided that, for insured coverage, the Federal external review process would be fulfilled through the HHS-administered process.

[15] See HHS Technical Guidance issued September 23, 2010.

[16] Under paragraphs (c)(2)(i) and (c)(2)(xvi) of the July 2010 regulations, State processes must provide external review for adverse benefit determinations (including final internal adverse benefit determinations) that are based on issuer's (or plan's) requirements for medical necessity, appropriateness, health care setting, level of care, or effectiveness of a covered benefit; or that involve experimental or investigational treatment. (A State external review process may also provide for external review of a broader scope of adverse benefit determinations.) At the same time, paragraph (c)(3) of the July 2010 regulations provides a transition period during which a State external review process will be considered binding on an issuer (or a plan), in lieu of the requirements of any Federal external review process, even if the State process does not meet all the requirements of paragraph (c)(2) of the July 2010 regulations. That transition period is being modified by this amendment, as described below.

external review under the Federal external review process.

II. Overview of Amendments to the Interim Final Regulations

A. Internal Claims and Appeals

1. Expedited Notification of Benefit Determinations Involving Urgent Care (Paragraph (b)(2)(ii)(B) of the July 2010 Regulations)

The July 2010 regulations provided that a plan or issuer must notify a claimant of a benefit determination (whether adverse or not) with respect to a claim involving urgent care (as defined in the DOL claims procedure regulation) [17] as soon as possible, taking into account the medical exigencies, but not later than 24 hours after the receipt of the claim by the plan or issuer, unless the claimant fails to provide sufficient information to determine whether, or to what extent, benefits are covered or payable under the plan or health insurance coverage. This was a change from the DOL claims procedure regulation, which generally requires a determination not later than 72 hours after receipt of the claim by a group health plan for urgent care claims. The preamble to the July 2010 regulations stated that the Departments expected electronic communication would enable faster decision-making than in the year 2000, when the DOL claims procedure regulation was issued.[18]

While some commenters supported the 24-hour rule (particularly consumer advocates and medical associations, including mental health providers who noted the 24-hour standard was especially important for people in psychiatric crisis), concerns were raised by many plans and issuers regarding the burden of a 24-hour turnaround. Some commenters argued that some of the claims constituting ''urgent care'' and thus qualifying for the expedited timeframe really do not need to be made within 24 hours. Moreover, a number of commenters highlighted that the 72-hour provision was intended only to serve as a ''backstop''; as the general rule under both the July 2010 regulations and the DOL claims procedure regulation requires a decision as soon as possible consistent with the medical exigencies involved, making the change to a 24-hour timeframe unnecessary for the most serious medical cases. Some commenters cited the Emergency Medical Treatment and Labor Act (EMTALA),[19] which generally requires hospitals to provide emergency care to individuals with or without insurance or preauthorization and, therefore, mitigates the need for expedited pre-service emergency claims determinations in many situations. Finally, some commenters stated that a firm 24-hour turnaround for urgent care claims will adversely affect claimants, as plans and issuers will not have sufficient time to properly review a claim, adversely affecting the quality of the review process in cases where the provider cannot be consulted in time, and leading to unnecessary denials of claims.

After considering the comments, and the costs and benefits of an absolute 24-hour decision-making deadline for pre-service urgent care claims, this amendment permits plans and issuers to follow the original rule in the DOL claims procedure regulation (requiring decision-making in the context of pre-service urgent care claims as soon as possible consistent with the medical exigencies involved but in no event later than 72 hours), *provided* that the plan or issuer defers to the attending provider with respect to the decision as to whether a claim constitutes ''urgent care.'' At the same time, the Departments underscore that the 72-hour timeframe remains only an outside limit and that, in cases where a decision must be made more quickly based on the medical exigencies involved, the requirement remains that the decision should be made sooner than 72 hours after receipt of the claim.

2. Additional Notice Requirements for Internal Claims and Appeals (Paragraph (b)(2)(ii)(E) of the July 2010 Regulations)

The July 2010 regulations also provided additional content requirements for any notice of adverse benefit determination or final internal adverse benefit determination. The July 2010 regulations required a plan or issuer to:

(a) Ensure that any notice of adverse benefit determination or final internal adverse benefit determination includes information sufficient to identify the claim involved. Under the July 2010 regulations, this information included the date of service, the health care provider, and the claim amount (if applicable),[20] as well as the diagnosis code (such as an ICD–9 code, ICD–10 code, or DSM–IV code),[21] the treatment code (such as a CPT code),[22] and the corresponding meanings of these codes.

(b) Ensure that the description of the reason or reasons for the adverse benefit determination or final internal adverse benefit determination includes the denial code (such as a CARC and RARC) [23] and its corresponding meaning. It must also include a description of the plan's or issuer's standard, if any, that was used in denying the claim (for example, if a plan applies a medical necessity standard in denying a claim, the notice must include a description of the medical necessity standard). In the case of a notice of final internal adverse benefit determination, this description must include a discussion of the decision.

(c) Provide a description of available internal appeals and external review processes, including information regarding how to initiate an appeal.

(d) Disclose the availability of, and contact information for, any applicable office of health insurance consumer assistance or ombudsman established under PHS Act section 2793 to assist enrollees with the internal claims and appeals and external review processes.[24]

Many comments received on the July 2010 regulations raised concerns about the additional content required to be included in the notices. Comments by a range of stakeholders, including plans, issuers, and consumer advocacy organizations focused heavily on the automatic provision of the diagnosis

[17] Under the DOL claims procedure regulation, a ''claim involving urgent care'' is a claim for medical care or treatment with respect to which the application of the time periods for making non-urgent care determinations could seriously jeopardize the life or health of the claimant or the ability of the claimant to regain maximum function; or, in the opinion of a physician with knowledge of the claimant's medical condition, would subject the claimant to severe pain that cannot be adequately managed without the care or treatment that is the subject of the claim.

[18] 75 FR 43330, 43333 (July 23, 2010).

[19] 42 U.S.C. 1395dd.

[20] The amount of the claim may not be knowable or available at the time, such as in a case of preauthorization, or there may be no specific claim, such as in a case of rescission that is not connected to a claim.

[21] ICD–9 and ICD–10 codes refer to the International Classification of Diseases, 9th revision and 10th revision, respectively. The DSM–IV codes refer to the Diagnostic and Statistical Manual of Mental Disorders, Fourth Edition.

[22] CPT refers to Current Procedural Terminology.

[23] CARC refers to Claim Adjustment Reason Code and RARC refers to Remittance Advice Remark Code.

[24] To assist plans and issuers in making these disclosures, the Departments provided a current list of relevant consumer assistance programs and ombudsmen in the Appendix to T.R. 2011–01. Plans and issuers with July 1 plan years may rely upon the list in that Appendix when developing their notices of adverse benefit determination and final internal adverse benefit determination for plan years beginning on July 1, 2011. The Departments are committed to reviewing and updating this list. The first update is being made available contemporaneous with publication of this amendment. The first update is available (and any future updates will be made available) at *http://www.dol.gov/ebsa/healthreform* and *http://cciio.cms.gov/programs/consumer/capgrants/index.html.*

and treatment codes (and their meanings). Concerns were raised about privacy (because explanations of benefits (EOBs) often are sent to an individual who is not the patient, such as an employee who is the patient's spouse or parent), interference with the doctor-patient relationship,[25] and high costs.[26] More specifically, commenters highlighted that sensitive issues such as mental health treatments would be identified by specific treatment or diagnosis codes and that privacy concerns are magnified for adult dependents under age 26 who may be covered by their parent's health plan. Others pointed out that there are over 20,000 treatment and diagnosis codes in use today, presenting a costly administrative and operational challenge for plans and issuers. Comments also questioned the efficacy of providing the codes, which some argued are often very difficult for the average patient to understand.[27]

Other comments were received in support of the coding provisions. Consumer advocates commented positively on the requirement that denial notices include information for consumers about their right to appeal denials and the availability of state consumer assistance programs (CAPs) that will help consumers file appeals. There were also positive comments on the requirement to provide a rationale for the denial (including a description of the plan's or issuer's standard (such as ''medical necessity''), if any, that was used denying the claim). With respect to the provision of coding information, some commented that this would be helpful to consumers because coding errors and missing coding information often are the basis for denying claims.

After considering all of the comments, and the costs and benefits of the additional disclosure, this amendment eliminates the requirement to automatically provide the diagnosis and treatment codes as part of a notice of adverse benefit determination (or final internal adverse benefit determination) and instead substitutes a requirement that the plan or issuer must provide notification of the opportunity to request the diagnosis and treatment codes (and their meanings) in all notices of adverse benefit determination (and notices of final internal adverse benefit determination), and a requirement to provide this information upon request.[28] This amendment also clarifies that, in any case, a plan or issuer must not consider a request for such diagnosis and treatment information, in itself, to be a request for (and therefore trigger the start of) an internal appeal or external review.

3. Deemed Exhaustion of Internal Claims and Appeals Processes (Paragraph (b)(2)(ii)(F) of the July 2010 Regulations)

The courts generally require claimants to exhaust administrative proceedings before going to court or seeking external review. When plans and issuers offer full and fair internal procedures for resolving claims, it is reasonable to insist that claimants first turn to those procedures before seeking judicial or external review of benefit denials. There is less justification, however, for insisting that a claimant exhaust administrative procedures that do not comply with the law. Accordingly, the July 2010 regulations permitted claimants to immediately seek review if a plan or issuer failed to ''strictly adhere'' to all of the July 2010 regulations' requirements for internal claims and appeals processes, regardless of whether the plan or issuer asserted that it ''substantially complied'' with the July 2010 regulations. The July 2010 regulations also clarified that, in such circumstances, the reviewing tribunal should not give special deference to the plan's or issuer's decision, but rather should resolve the dispute *de novo.* Consumer groups generally supported this ''strict adherence'' approach, but the approach received a number of negative comments from some issuers and plan sponsors, who advocate a ''substantial compliance'' approach.

The Departments continue to believe that claimants should not have to follow an internal claims and appeals procedure that is less than full, fair, and timely, as set forth in the July 2010 regulations. In response to comments, the Departments are retaining the general approach to this requirement, but this amendment also adds a new paragraph (b)(2)(ii)(F)(*2*) to the July 2010 regulations to provide an exception to the strict compliance standard for errors that are minor and meet certain other specified conditions. The new paragraph will also protect claimants whose attempts to pursue other remedies under paragraph (b)(2)(ii)(F)(*1*) of the interim final regulations are rejected by a reviewing tribunal. Under the amended approach, any violation of the procedural rules of the July 2010 regulations pertaining to internal claims and appeals would permit a claimant to seek immediate external review or court action, as applicable, unless the violation was:

(1) De minimis;

(2) Non-prejudicial;

(3) Attributable to good cause or matters beyond the plan's or issuer's control;

(4) In the context of an ongoing good-faith exchange of information; and

(5) Not reflective of a pattern or practice of non-compliance.

In addition, the claimant would be entitled, upon written request, to an explanation of the plan's or issuer's basis for asserting that it meets this standard, so that the claimant could make an informed judgment about whether to seek immediate review. Finally, if the external reviewer or the court rejects the claimant's request for immediate review on the basis that the plan met this standard, this amendment would give the claimant the right to resubmit and pursue the internal appeal of the claim.

4. Form and Manner of Notice (Paragraph (e) of the July 2010 Regulations)

PHS Act section 2719 requires group health plans and health insurance issuers to provide relevant notices in a culturally and linguistically appropriate manner. The July 2010 regulations set forth a requirement to provide notices in a non-English language based on separate thresholds of the number of people who are literate in the same non-English language. In the group market, the threshold set forth in the July 2010 regulations differs depending on the number of participants in the plan:

- For a plan that covers fewer than 100 participants at the beginning of a plan year, the threshold is 25 percent of

[25] Several commenters raised concerns that providers' initial or suspected diagnosis may not match the ultimate diagnosis or patients' perception of their diagnosis. One commenter gave the example of a patient who has a biopsy procedure. In that case, the patient would receive an EOB with an initial diagnosis code of cancer, however the results of the biopsy may rule out cancer. In that situation, the EOB can result in confusion and unnecessary mental anguish.

[26] In particular, comment letters cited concerns with respect to programming aspects of providing diagnosis codes at a time when plans and issuers are changing over from ICD–9 diagnosis codes to more extensive and technical ICD–10 codes.

[27] Several commenters noted that technical ICD–9 and/or ICD–10 codes can be confusing and/or cause worry. One commenter gave the example of a patient presenting with a white coating on his tongue, who is told not to worry and to brush the tongue with a toothbrush. The diagnosis code is 529.3, hypertrophy of tongue papillae, a term not used by the patient's doctor during the office visit and, therefore, prone to cause confusion and/or concern.

[28] As discussed earlier, in footnote 9, information related to diagnosis and treatment codes (and/or their meanings) is, however, generally required to be provided to claimants upon request under existing DOL claims procedures, which is also incorporated in the July 2010 regulations. *See* 29 CFR 2560.503–1(h)(2)(iii) and paragraph (b)(2)(i) of the July 2010 regulations.

all plan participants being literate only in the same non-English language.

• For a plan that covers 100 or more participants at the beginning of a plan year, the threshold is the lesser of 500 participants, or 10 percent of all plan participants, being literate only in the same non-English language.

These thresholds were adapted from the DOL regulations regarding style and format for a summary plan description, at 29 CFR 2520.102–2(c) for participants who are not literate in English. For the individual market, the threshold is 10 percent of the population residing in the county being literate only in the same non-English language. The individual market threshold was generally adapted from the approach used under the Medicare Advantage program, which required translation of materials in languages spoken by more than 10 percent of the general population in a service area at the time the threshold was established.

Under the July 2010 regulations, if an applicable threshold is met with respect to a non-English language, the plan or issuer must provide the notice upon request in the non-English language. Additionally, the plan or issuer must include a statement in the English versions of all notices, prominently displayed in the non-English language, offering the provision of such notices in the non-English language. Finally, to the extent the plan or issuer maintains a customer assistance process (such as a telephone hotline) that answers questions or provides assistance with filing claims and appeals, the plan or issuer must provide such assistance in the non-English language.

Comments received in response to the July 2010 regulations raised several concerns about this requirement. One group of commenters stated that the thresholds for the group market were difficult to comply with, especially for small plans (where an individual or a small number of individuals could cause a plan to change status with respect to the threshold) and insured plans (where the issuer may be in a very difficult position to determine the English literacy of an employer's workforce). Some commenters stated that the threshold requirements for the group and individual markets should be consistent.

Other commenters were concerned with the high costs of compliance with this rule, particularly the ''tagging and tracking requirement'' to the extent that individuals who request a document in a non-English language would need to be ''tagged'' and ''tracked'' so that any future notices would be provided automatically in the non-English language. Some of these commenters cited the high costs associated with implementing translation requirements pursuant to California State law and the low take-up rates of translated materials in California. Some commenters also cited the importance of having written translation of documents available (at a minimum, upon request), as well as having oral language services for customer assistance.

Following review of the comments submitted on this issue and further review and consideration of the provisions of PHS Act section 2719, the Departments have determined it is appropriate to amend the provisions of the July 2010 regulations related to the provision of notices in a culturally and linguistically appropriate manner. This amendment establishes a single threshold with respect to the percentage of people who are literate only in the same non-English language for both the group and individual markets. With respect to group health plans and health insurance issuers offering group or individual health insurance coverage, the threshold percentage of people who are literate only in the same non-English language will be set at 10 percent or more of the population residing in the claimant's county, as determined based on American Community Survey data published by the United States Census Bureau.[29] The Departments will update this guidance annually on their Web site if there are changes to the list of the counties determined to meet this 10 percent threshold for the county's population being literate only in the same non-English language.[30]

This amendment to the July 2010 regulations requires that each notice sent by a plan or issuer to an address in a county that meets this threshold include a one-sentence statement in the relevant non-English language about the availability of language services. The Departments have provided guidance with sample sentences in the relevant languages in separate guidance being issued contemporaneous with the publication of this amendment. For ease of administration, some plans and issuers may choose to use a one-sentence statement for all notices within an entire State (or for a particular service area) that reflects the threshold language or languages in any county within the State or service area. For example, statewide notices in California could include the relevant one-sentence statement in Spanish and Chinese because, using the data from Table 2, Spanish meets the 10 percent threshold in Los Angeles County and 22 other counties and Chinese meets the 10 percent threshold in San Francisco County. This would be a permissible approach to meeting the rule under this amendment.

In addition to including a statement in all notices in the relevant non-English language, this amendment requires a plan or issuer to provide a customer assistance process (such as a telephone hotline) with oral language services in the non-English language and provide written notices in the non-English language upon request. For this purpose, plans and issuers are permitted to direct claimants to the same customer service telephone number where representatives can first attempt to address the consumer's questions with an oral discussion, but also provide a written translation upon request in the threshold non-English language. Finally, this amendment removes any ''tagging and tracking'' requirement that would have otherwise applied under the July 2010 regulations.

This amendment to the July 2010 regulations provides standards for providing culturally and linguistically appropriate notices that balance the objective of protecting consumers by providing understandable notices to individuals who speak primary languages other than English with the goal of simplifying information collection burdens on plans and issuers. (Note, nothing in these regulations should be construed as limiting an individual's rights under Federal or State civil rights statutes, such as Title VI of the Civil Rights Act of 1964 (Title VI) which prohibits recipients of Federal financial assistance, including issuers participating in Medicare Advantage, from discriminating on the basis of race, color, or national origin. To ensure non-discrimination on the basis of national origin, recipients are required to take reasonable steps to ensure meaningful access to their programs and activities by limited English proficient persons. For more information, see, ''Guidance to Federal Financial Assistance Recipients Regarding Title VI Prohibition Against National Origin Discrimination Affecting Limited English Proficient Persons,'' available at *http://www.hhs.gov/ocr/civilrights/resources/*

[29] At the time of publication of this amendment, 255 U.S. counties (78 of which are in Puerto Rico) meet this threshold. The overwhelming majority of these are Spanish; however, Chinese, Tagalog, and Navajo are present in a few counties, affecting five states (specifically, Alaska, Arizona, California, New Mexico, and Utah). A full list of the affected U.S. counties in 2011 is included in Table 2 later in this preamble, under the heading, ''IV. Economic Impact and Paperwork Burden.''

[30] This information will be made available at *http://www.dol.gov/ebsa/healthreform* and *http://cciio.cms.gov/*.

specialtopics/lep/policyguidancedocument.html.)

The Departments welcome comments on this amendment, including whether it would be appropriate to include a provision in the final rules requiring health insurance issuers providing group health insurance coverage to provide language services in languages that do not meet the requisite threshold for an applicable non-English language, if requested by the administrator or sponsor of the group health plan to which the coverage relates. For example, if Chinese does not meet the 10 percent threshold in New York County, but an employer with a large Chinese-speaking population asks the health insurance issuer providing its group health insurance coverage to provide language services in Chinese (as described in the amendment), the Departments invite comment on what obligations should be imposed on the issuer, if any, to provide language services in Chinese.

B. External Review

1. Duration of Transition Period for State External Review Processes

In general, if State laws do not meet the minimum consumer protections of the NAIC Uniform Model Act,[31] as set forth in paragraph (c)(2) of the July 2010 regulations, insurance coverage (as well as self-insured nonfederal governmental plan and church plan coverage) is subject to the requirements of an external review process under Federal standards similar to the process under the NAIC Uniform Model Act, such as the HHS-administered process. Paragraph (c)(3) of the July 2010 regulations provided a transition period for plan years (in the individual market, policy years) beginning before July 1, 2011 in order to allow States time to amend their laws to meet or go beyond the minimum consumer protections of the NAIC Uniform Model Act set forth in paragraph (c)(2) of the July 2010 regulations. HHS has been working closely with States regarding enactment of laws to conform to paragraph (c)(2) and much progress has been made. However, enacting State legislation and regulations can often be a complex and time-consuming process. Accordingly, the Departments are modifying the transition period under paragraph (c)(3) of the July 2010 regulations so that the last day of the transition period is December 31, 2011 to give States, which are making substantial progress in implementing State external review processes that conform to paragraph (c)(2), the requisite time to complete that process. Because the July 2010 regulations would have ended the transition period for plan years (in the individual market, policy years) beginning on or after July 1, 2011, the Departments note that ending the transition period on December 31, 2011 will reduce the length of the transition period for plans and policies with plan years (in the individual market, policy years) beginning after January 1 but before July 1. When the July 2010 regulations were published, the Departments anticipated that issuers in every State that had not enacted laws to conform to paragraph (c)(2) of the July 2010 regulations would need to participate in the HHS-administered process. Now, the Departments have decided that issuers may continue to participate in a State external review process under Federal standards similar to the process under the NAIC Uniform Model Act (an NAIC-similar process), which the Departments anticipate will reduce market disruption when the transition period ends. Therefore, based on the Departments' concerns for making the consumer protections of the Affordable Care Act available without undue delay and for ensuring as much uniformity as possible in the availability of those protections regardless of the form of a consumer's health coverage, the Departments have decided to end the transition period on December 31, 2011. Therefore, this amendment to the July 2010 regulations provides that, before January 1, 2012, an applicable State external process will apply in lieu of the requirements of the Federal external review process. PHS Act section 2719(c) authorizes the Departments to deem an external review process ''in operation as of the date of enactment'' of the Affordable Care Act as compliant with the external review requirements of PHS Act section 2719(b). Through December 31, 2011, any currently effective State external review process satisfies the requirements of either PHS Act section 2719(c) or section 2719(b)(2). If there is no applicable State external review process, separate guidance being issued contemporaneous with the publication of this amendment generally provides a choice between the HHS-administered process or the private accredited IRO process.

2. Scope of the Federal External Review Process

Paragraph (d)(1) of the July 2010 regulations sets forth the scope of claims eligible for external review under the Federal external review process. Specifically, any adverse benefit determination (including a final internal adverse benefit determination) could be reviewed unless it related to a participant's or beneficiary's failure to meet the requirements for eligibility under the terms of a group health plan (*i.e.,* worker classification and similar issues were not within the scope of the Federal external review process).

Comments received in response to the July 2010 regulations were mixed on the scope of claims eligible for external review. Some commenters argued that PHS Act section 2719 requires the Federal external review process to be ''similar to'' the NAIC Uniform Model Act and that the broader scope of claims eligible for the Federal external review process is a major departure from the NAIC Uniform Model Act. In addition, some comments from plans and issuers stated that the IROs that are used in the private accredited IRO process traditionally have expertise in adjudicating medical claims, and questioned IROs' experience and expertise with legal and contractual claims. Other comments from IROs and the IRO industry stated that these organizations do currently conduct reviews that involve both medical judgment issues and legal and contractual issues, and that there is sufficient capacity for conducting reviews of such disputes.

Some plan and issuer comments highlighted that, with a limited number of accredited IROs and increased demand for their services, the cost of external review for self-insured group health plans will likely increase. By contrast, an IRO association group commented that member organizations are not at capacity with regard to the volume of work they can perform, and that they are confident that the number of accredited IROs can adequately handle the volume of reviews anticipated for the Federal external review process.

Some plans and issuers stated that handing plan document interpretation and legal interpretation issues over to an IRO may raise issues of consistency of interpretations within a plan, unwarranted consistency across plans that have unique standards, ERISA fiduciary responsibility concerns, and possible conflicts. At the same time, other comments generally supported the broad scope of claims eligible for the

[31] The NAIC Uniform Model Act in place on July 23, 2010 provides external review for claims involving medical necessity, appropriateness, health care setting, level of care, effectiveness (of a covered benefit), whether a treatment is experimental, and whether a treatment is investigational.

Federal external review process as set forth in the July 2010 regulations. These commenters argued very strongly that it is nearly impossible to adjudicate contractual claims through traditional ERISA enforcement (which generally relies on Federal court adjudication), leaving plan participants and beneficiaries with no effective means of enforcing their rights to benefits under a plan. Consumer organizations further commented that external review finally provides the free, independent means of enforcement to level the playing field of claims adjudication and, therefore, the scope of claims eligible for the Federal external review process should be as broad as possible.

After considering all the comments, with respect to claims for which external review has not been initiated before September 20, 2011, the amendment suspends the original rule in the July 2010 regulations regarding the scope of claims eligible for external review for plans using a Federal external review process (regardless of which type of Federal process), temporarily replacing it with a different scope. Specifically, this amendment suspends the broad scope of claims eligible for the Federal external review process and narrows the scope to claims that involve (1) medical judgment (excluding those that involve only contractual or legal interpretation without any use of medical judgment), as determined by the external reviewer; or (2) a rescission of coverage. The more narrow scope under this amendment is more similar to the scope of claims eligible for external review under the NAIC Uniform Model Act. This amendment provides an example describing a plan that generally only provides 30 physical therapy visits but will provide more with an approved treatment plan. The plan's rejection of a treatment plan submitted by a provider for the 31st visit based on a failure to meet the plan's standard for medical necessity involves medical judgment and, therefore, the claim is eligible for external review. Similarly, another example describes a plan that generally does not provide coverage for services provided on an out-of-network basis, but will provide coverage if the service cannot effectively be provided in network. In this example, again, the plan's rejection of a claim for out-of-network services involves medical judgment. Additional examples of situations in which a claim is considered to involve medical judgment include adverse benefit determinations based on:

- The appropriate health care setting for providing medical care to an individual (such as outpatient versus inpatient care or home care versus rehabilitation facility);
- Whether treatment by a specialist is medically necessary or appropriate (pursuant to the plan's standard for medical necessity or appropriateness);
- Whether treatment involved ''emergency care'' or ''urgent care'', affecting coverage or the level of coinsurance;
- A determination that a medical condition is a preexisting condition;
- A plan's general exclusion of an item or service (such as speech therapy), if the plan covers the item or service in certain circumstances based on a medical condition (such as, to aid in the restoration of speech loss or impairment of speech resulting from a medical condition);
- Whether a participant or beneficiary is entitled to a reasonable alternative standard for a reward under the plan's wellness program; [32]
- The frequency, method, treatment, or setting for a recommended preventive service, to the extent not specified, in the recommendation or guideline of the U.S. Preventive Services Task Force, the Advisory Committee on Immunization Practices of the Centers for Disease Control and Prevention, or the Health Resources and Services Administration (as described in PHS Act section 2713 and its implementing regulations); [33] and
- Whether a plan is complying with the nonquantitative treatment limitation provisions of the Mental Health Parity and Addiction Equity Act and its implementing regulations, which generally require, among other things, parity in the application of medical management techniques.[34]

The suspension is intended to give the marketplace time to adjust to providing external review. It will also allow the Departments time to evaluate IROs' capacity for handling external reviews; to consider whether current accreditation standards are sufficient to ensure that IROs are capable of making accurate and consistent decisions (both across different plans and across different IROs) regarding legal and contractual issues that do not involve medical judgment or rescissions; and to assess the mechanics of the Federal external review process (and any potential adjustments). The Departments solicit comments on these issues, including on whether limiting the scope of claims during the suspension period will impose administrative costs in determining whether a claim is eligible for external review. The Departments also welcome any data on external review claims actually performed to date under private contracts pursuant to the private accredited IRO process for implementing PHS Act § 2719(b), including number of claims reviewed, type of review (such as whether it involved any medical judgment or not), and costs associated with the review. The Departments expect that the suspension will be lifted by January 1, 2014, when other consumer protections under the Affordable Care Act take effect. Moreover, if, after taking into account all the relevant information, including public comments, the Departments decide to return to the original rule providing for a broad scope of claims or permanently modify the scope of claims through rulemaking, the Departments will give sufficient advance notice to enable plans, their service providers, IROs, and other affected parties sufficient time to comply with a new rule.

Separate guidance being issued contemporaneous with the publication of this amendment announces standards under which, until January 1, 2014, a State may operate an external review process under Federal standards similar to the process under the NAIC Uniform Model Act (an NAIC-similar process). The Departments are adopting this approach to permit States to operate their external review processes under standards established by the Departments until January 1, 2014, avoiding unnecessary disruption, while States work to adopt the consumer protections set forth in paragraph (c) of the July 2010 regulations. Paragraph (d)(1) of the July 2010 regulations, as amended, will govern the scope of a State external review process under Federal standards similar to the process under the NAIC Uniform Model Act. Because the amended paragraph (d)(1)

[32] See 26 CFR 54.9802–1(f)(2)(iv)(A), 29 CFR 2590.702(f)(2)(iv)(A), and 45 CFR 146.121(f)(2)(iv)(A), requiring that wellness programs that require individuals to satisfy a standard related to a health factor in order to obtain a reward allow a reasonable alternative standard (or waiver of the otherwise applicable standard) for obtaining the reward for any individual for whom, for that period, it is either unreasonably difficult due to a medical condition to satisfy the otherwise applicable standard, or medically inadvisable to attempt to satisfy the otherwise applicable standard.

[33] See 26 CFR 54.9815–2713T, 29 CFR 2590.715–2713, and 45 CFR 147.130; see also FAQ 8, FAQs About the Affordable Care Act Implementation Part II, regarding the scope, setting, or frequency of the items or services to be covered under the preventive health services recommendations and guidelines (available at *http://www.dol.gov/ebsa/faqs/faq-aca2.html* and *http://cciio.cms.gov/resources/factsheets/aca_implementation_faqs2.html*).

[34] See Code section 9812 and 26 CFR 54.9812–1T, ERISA section 712 and 29 CFR 2590.712, and PHS Act section 2726 and 45 CFR 146.136.

creates a broader scope of external review than is required under the NAIC Uniform Model Act, and because it would be illogical to require States to make changes to their process to encompass the broader scope of paragraph (d)(1) in their external review process while they work to adopt the consumer protections of the NAIC Uniform Model Act (which has a narrower scope), the Departments are also amending paragraph (d)(1) to permit the Secretaries to modify the scope of the Federal external review process in future guidance to permit State external review processes (both NAIC-similar processes and NAIC-parallel processes) to the scope that applies under the NAIC Uniform Model Act.

3. Clarification Regarding Requirement That External Review Decision Be Binding

The Departments have received a number of comments on the requirement that an IRO decision be binding on parties. Specifically, the July 2010 regulations provided that an external review decision by an IRO is binding on the plan or issuer, as well as the claimant, except to the extent that other remedies are available under State or Federal law.[35] This binding requirement is also one of the minimum consumer protections set forth in paragraph (c) of the July 2010 regulations.[36]

Some comments received in response to the July 2010 regulations highlighted the importance of this consumer protection and expressed approval that this requirement would minimize delays that could further hurt claimants, as the plan or issuer must provide coverage or payment for the claim immediately upon receipt of a notice of a final external review decision. Other commenters questioned whether the requirement that external review is binding eliminates the plan's or issuer's option to choose to pay a claim at any time during or after the external review process.

Nothing in PHS Act section 2719(b), the July 2010 regulations, or related guidance precludes a plan or issuer from choosing to provide coverage or payment for a benefit. Instead, the Departments read the requirement of the NAIC Uniform Model Act, which is incorporated into the July 2010 regulations, to require plans and issuers to provide a benefit if that is the decision of the IRO. A plan or issuer may not delay payment because the plan disagrees and intends to seek judicial review. Instead, while the plan may be entitled to seek judicial review, it must act in accordance with the IRO's decision (including by making payment on the claim) unless or until there is a judicial decision otherwise. However, the requirement that the IRO's decision be binding does not preclude the plan or issuer from making payment on the claim or otherwise providing benefits at any time, including following a final external review decision that denies the claim or otherwise fails to require such payment or benefits.

After considering all the comments on the requirement that an IRO decision be binding on the plan and issuer, as well as the claimant, this amendment clarifies the language in paragraphs (c)(2)(xi) (regarding the minimum standards for State external review processes) and (d)(2)(iv) (regarding Federal external review process standards). Specifically, these two provisions are amended to add language stating that, for purposes of the binding provision, the plan or issuer must provide benefits (including by making payment on the claim) pursuant to the final external review decision without delay, regardless of whether the plan or issuer intends to seek judicial review of the external review decision and unless or until there is a judicial decision otherwise. The Departments welcome comments as to whether any additional clarifications about the binding provision would be helpful.

C. Separate, Contemporaneous Technical Guidance

Separate technical guidance is being issued by the Departments contemporaneous with the publication of this amendment. This technical guidance addresses both State- and Federally-administered external review processes. An appendix to this technical guidance contains revised versions of the three model notices issued by the Departments in connection with the July 2010 regulations. The updated versions of the model notice of adverse benefit determination, model notice of final internal adverse benefit determination, and model notice of final external review decision reflect the requirements contained in the provisions of this amendment and the guidance. This technical guidance will be available at *http://www.dol.gov/ebsa/healthreform and http://cciio.cms.gov*.

HHS is issuing also two additional technical guidance documents. The first provides instructions for self-insured nonfederal governmental plans and health insurance issuers with respect to election of a Federal external review process. The second provides, for transparency purposes, updated information on how the county-level estimates pertaining to the 10 percent threshold were calculated for the rules related to culturally and linguistically appropriate notices. Both of these documents will be available at *http://cciio.cms.gov*.

III. Interim Final Rules

Section 9833 of the Code, section 734 of ERISA, and section 2792 of the PHS Act authorize the Secretaries of the Treasury, Labor, and HHS (collectively, the Secretaries) to promulgate any interim final rules that they determine are appropriate to carry out the provisions of chapter 100 of the Code, part 7 of subtitle B of title I of ERISA, and part A of title XXVII of the PHS Act, which include PHS Act sections 2701 through 2728 and the incorporation of those sections into ERISA section 715 and Code section 9815. The amendments promulgated in this rulemaking carry out the provisions of these statutes. Therefore, the foregoing interim final rule authority applies to these amendments.

Under the Administrative Procedure Act (APA) (5 U.S.C. 551 *et seq.*), while a general notice of proposed rulemaking and an opportunity for public comment is generally required before promulgation of regulations, this is not required when an agency, for good cause, finds that notice and public comment thereon are impracticable, unnecessary, or contrary to the public interest. The provisions of the APA that ordinarily require a notice of proposed rulemaking do not apply here because of the specific authority to issue interim final rules granted by section 9833 of the Code, section 734 of ERISA, and section 2792 of the PHS Act. Moreover, even if the APA requirements for notice and comment were applicable to this regulation, they have been satisfied. This is because the matters that are the subject of these amendments have already been subjected to public notice and comment, as they were addressed in the July 2010 regulations, and are a logical outgrowth of that document. The amendments made in this interim final rule are being made in response to public comments received on the July 2010 regulations. While the Departments have determined that, even if the APA were applicable, an additional opportunity for public comment is unnecessary in the case of these amendments, the Departments are issuing these amendments as an interim

[35] See 26 CFR 54.9815–2719T(d)(2)(iv), 29 CFR 2590.715–2719(d)(2)(iv), and 45 CFR 147.136(d)(2)(iv).

[36] See 26 CFR 54.9815–2719T(c)(2)(xi), 29 CFR 2590.715–2719(c)(2)(xi), and 45 CFR 147.136(c)(2)(xi).

final rule so as to provide the public with an opportunity for public comment on these modifications.

IV. Economic Impact and Paperwork Burden

A. Summary and Need for Regulatory Action—Department of Labor and Department of Health and Human Services

As stated earlier in this preamble, the Departments previously issued the July 2010 regulations implementing PHS Act section 2719, which were published in the **Federal Register** on July 23, 2010 (75 FR 43330). The July 2010 regulations set forth rules with respect to internal claims and appeals and external appeals processes for group health plans and health insurance issuers that are not grandfathered health plans.

As described in detail in Section II of this preamble, after the July 2010 regulations were issued, the Departments received public comments expressing concerns about the burdens associated with several of the regulations' provisions. In response to such comments, the Departments are hereby amending the following provisions of the July 2010 regulations:

- Expedited notification of benefit determinations involving urgent care (paragraph (b)(2)((ii)(B) of the July 2010 regulations);
- Additional notice requirements with respect to notice of adverse benefit determinations or final internal adverse benefit determination (paragraph (b)(2)(ii)(E) of the July 2010 regulations);[37]
- Deemed exhaustion of internal claims and appeals processes (paragraph (b)(2)(ii)(F) of the July 2010 regulations);
- Providing notices in a culturally and linguistically appropriate manner (paragraph (e) of the July 2010 regulations);
- The duration of the transition period for State external review processes (paragraph (c)(3) of the July 2010 regulations); and
- The scope of claims eligible for external review under the Federal external appeals process (paragraph (d)(1) of the July 2010 regulations).

The Departments crafted these amendments to the July 2010 regulations to secure the protections intended by Congress. In accordance with OMB Circular A–4, the Departments have quantified the costs of these amendments where feasible and provided a qualitative discussion of some of the benefits and costs that may stem from them.

The Departments believe that (i) the costs associated with the amended rules are less than the costs associated with the July 2010 regulations, (ii) the amended rules adequately protect the rights of participants, beneficiaries, and policyholders, and (iii) the benefits of the amended rules justify their costs relative to the pre-Affordable Care Act baseline and the July 2010 regulations.

B. Executive Orders 12866 and 13563—Department of Labor and Department of Health and Human Services

Executive Orders 13563 and 12866 direct agencies to assess all costs and benefits of available regulatory alternatives and, if regulation is necessary, to select regulatory approaches that maximize net benefits (including potential economic, environmental, public health and safety effects, distributive impacts, and equity). Executive Order 13563 emphasizes the importance of quantifying both costs and benefits, of reducing costs, of harmonizing rules, and of promoting flexibility. This rule has been designated a ''significant regulatory action'' although not economically significant, under section 3(f) of Executive Order 12866. Accordingly, the rule has been reviewed by the Office of Management and Budget.

The Departments provide an assessment of the potential costs and benefits associated with each amended regulatory provision below, as summarized in Table 1.

TABLE 1—ACCOUNTING TABLE

Benefits				
Qualitative: Amendments to the interim final regulations ensure urgent care benefit determinations are made in a timely manner, increase patient privacy, ensure non-English speakers understand their rights, and provide that claimants will be deemed to have exhausted their administrative proceedings and can proceed to court or external review if a plan or issuer fails to strictly adhere to the regulatory requirements with the exception of the requirements that are described in the amendment. These amendments are expected to reduce compliance costs while still ensuring patient protections.				
Cost	Estimate	Year dollar	Discount rate	Period covered
Annualized Monetized ($millions/year)	1.7 1.7	2011 2011	7 percent 3 percent	2012–2014 2012–2014
Qualitative: Monetized costs are for providing notices upon request in a culturally and linguistically appropriate manner. Non-monetized costs include costs for plans and issuers to respond to requests for diagnostic and treatment codes, and costs incurred by claimants to resolve whether a plan or insurer's failure to strictly adhere to the regulatory requirements is sufficient for a claimant to proceed directly to an external or court review.				

1. Estimated Number of Affected Entities

For purposes of estimating the entities affected by these amendments to the July 2010 regulations, the Departments have defined a large group health plan as an employer plan with 100 or more workers and a small group plan as an employer plan with fewer than 100 workers. The Departments make the following estimates about plans and issuers affected by these amendments: (1) There are approximately 72,000 large and 2.8 million small ERISA-covered group health plans with an estimated 97.0 million participants in large group plans and 40.9 million participants in small group plans;[38] (2) there are

[37] Under the July 2010 regulations, this included the date of service, the health care provider, and the claim amount (if applicable), as well as the diagnosis code (such as an ICD–9 code, ICD–10 code, or DSM–IV code), the treatment code (such as a CPT code), and the corresponding meanings of these codes.

[38] All participant counts and the estimates of individual policies are from the U.S. Department of Labor, EBSA calculations using the March 2009 Current Population Survey Annual Social and Economic Supplement and the 2008 Medical Expenditure Panel Survey.

126,000 governmental plans with 36.1 million participants in large plans and 2.3 million participants in small plans;[39] and (3) there are 16.7 million individuals under age 65 covered by individual health insurance policies.[40]

The actual number of affected individuals depends on several factors, including whether (i) a health plan retains its grandfather status, (ii) the plan is subject to ERISA, (iii) benefits provided under the plan are self-funded or financed by the purchase of an insurance policy, (iii) the applicable State has enacted an internal claims and appeals law, and (iv) the applicable State has enacted an external review law, and if so the scope of such law, and (v) the number of new plans and enrollees in such plans.

2. Benefits and Costs

The benefits and costs of the amendments to the July 2010 regulations are discussed together under this section, because the primary effect of the amendments is to reduce the cost of compliance.

a. *Expedited notification of benefit determination involving urgent care.* As discussed in detail above, the July 2010 regulations generally provide that a plan or issuer must notify a claimant of a benefit determination with respect to an urgent care claim as soon as possible taking into account the medical exigencies, but no later than 24 hours after the receipt of the claim by the plan or issuer. This was a change from the DOL claims procedure regulation, which requires an urgent care determination to be made not later than 72 hours after receipt of the claim by a group health plan. The Departments received several comments regarding the burdens associated with meeting the 24-hour turnaround. Some commenters argued that some of the claims constituting ''urgent care'' and thus qualifying for the expedited timeframe really do not need to be decided within 24 hours. Moreover, a number of commenters highlighted that the 72-hour provision was never anything more than a ''backstop''; the general rule under both the July 2010 regulations and the DOL claims procedure regulation is for a decision as soon as possible consistent with the medical exigencies involved, making the change to a 24-hour timeframe unnecessary for the most serious medical cases. Finally, some commenters cited the Emergency Medical Treatment and Labor Act (EMTALA)[41], which generally requires emergency room care to be treated with or without insurance or preauthorization and, therefore, mitigates much of the need for expedited pre-service emergency claims determinations in many situations.

After considering the comments, and the costs and benefits of an absolute 24-hour decision-making deadline, the amendment permits plans and issuers to follow the original rule in the DOL claims procedure regulation (requiring decision-making in the context of pre-service urgent care claims as soon as possible consistent with the medical exigencies involved but in no event no later than 72 hours), *provided* the plan or issuer defers to the attending provider with respect to the decision as to whether a claim constitutes ''urgent care.''

The Departments expect that this amendment will ensure urgent care benefit determinations are made in a timely manner while reducing burden on plans and issuers for several reasons. ERISA-covered plans were already subject to this requirement; therefore, there is no additional burden imposed on such plans from the pre-Affordable Care Act baseline. For self-insured nonfederal governmental plans and issuers in the individual market, the 72-hour requirement would increase burden from a pre-Affordable Care Act baseline to the extent that such plans and issuers are not already meeting this standard. The Departments do not have sufficient data to estimate the fraction of plans and issuers that were not already in compliance with this standard. Many claims filed with self-insured nonfederal governmental plans and individual market issuers already could have been meeting this requirement for urgent care claims, because ERISA claims constitute a large portion of health claims, and the Departments understand that, in general, issuers and service providers apply the same claims and appeals standards to ERISA-covered and non-ERISA-covered plans.

Plans and issuers that previously were not subject to the DOL claims procedure regulation and that are not already meeting the claims and appeals standard under the DOL claims procedure regulation, could incur additional costs to become compliant with the 72-hour standard, but the Departments expect these costs to be less than those associated with a 24-hour standard. Speeding up the notification process for these determinations to meet the 72-hour standard could necessitate incurring additional cost to add more employees or find other ways to shorten the timeframe, but again such costs are expected to be less than the costs associated with meeting the 24-hour standard provided in the July 2010 regulations. Additional costs for claimants may be associated with this requirement if meeting the 72-hour timeframe results in more claims being denied than would have been denied under a longer notification period, but again such costs are expected to be less than the costs associated with meeting the 24-hour standard provided in the July 2010 regulations. The Departments do not have sufficient data to estimate such costs.

b. *Additional notice requirements for internal claims and appeals.* As discussed above, the July 2010 regulations had additional content requirements for the required notices. The Departments received comments addressing the requirements to include the diagnosis code (such as an ICD–9 code, ICD–10 code, or DSM–IV code), the treatment code (such as a CPT code), and the corresponding meanings of these codes. Concerns were raised about patient privacy, interference with the doctor-patient relationship, and high costs. Commenters also pointed out that there are currently over 20,000 treatment and diagnosis codes in use today, presenting a costly administrative and operational challenge for plans and issuers. Comments also questioned the efficacy of providing codes which some argued are often very difficult for the average patient to understand.

After considering all the comments, and the costs and benefits of the additional disclosure, the amendment to the July 2010 regulations eliminates the requirement to automatically provide the diagnosis and treatment codes as part of a notice of adverse benefit determination (or final internal adverse benefit determination) and instead requires plans and issuers to provide notification of the opportunity to request the diagnosis and treatment codes (and their meanings) in all notices of adverse benefit determination (and notices of final internal adverse benefit determination) and to provide this information upon request.

Making the codes only available upon request protects patients' privacy while reducing the burden for plans and issuers to redesign notices. However, plans and issuers will still incur costs to establish procedures to receive, process, and mail the requests. The Departments do not have a basis to estimate the net cost associated with this amendment, because they do not have sufficient data available to estimate

[39] Estimate is from the 2007 Census of Government.

[40] US Census Bureau, Current Population Survey, March 2009.

[41] 42 U.S.C. 1395dd.

the savings that will result from plans and issuers not needing to redesign notices or calculate the number of future requests.

c. *Deemed exhaustion of internal claims and appeals process.* The July 2010 regulations provide that claimants can immediately seek judicial or external review if a plan or issuer failed to ''strictly adhere'' to all of the July 2010 regulations' requirements for internal claims and appeals processes, regardless of whether the plan or issuer asserted that it ''substantially complied'' with the July 2010 regulations. This approach received a number of negative comments from some issuers and plan sponsors, who prefer a ''substantial compliance'' approach, especially in cases where deviations from the regulatory standards were minor.

In response to these comments, the Departments are retaining the approach to this requirement, but this amendment also adds a new paragraph (b)(2)(ii)(F)(*2*) to the July 2010 regulations to provide an exception to the strict compliance standard for errors that are minor and meet certain other specified conditions. The new paragraph will also protect claimants whose attempts to pursue other remedies under paragraph (b)(2)(ii)(F)(*1*) of the interim final regulations are rejected by a reviewing tribunal. Under the amended approach, any violation of the procedural rules of July 2010 regulations pertaining to internal claims and appeals would permit a claimant to seek immediate external review or court action, as applicable, unless the violation was:

(1) De minimis;

(2) Non-prejudicial;

(3) Attributable to good cause or matters beyond the plan's or issuer's control;

(4) In the context of an ongoing good-faith exchange of information; and

(5) Not reflective of a pattern or practice of non-compliance.[42]

The Departments expect that this amendment will protect patients' right to proceed to external review while lowering costs based on the assumption that internal appeals are less expensive than external reviews or litigation. However, the amendment may add some costs, because participants and policyholders now may face uncertainty regarding whether a particular violation is minor. Many claimants may incur a cost to seek professional advice, because they will not be able to make this judgment on their own behalf. Alternatively, some claimants might seek immediate external review or judicial review and be denied it. The Departments do not have a sufficient basis to estimate these costs.

d. *Culturally and Linguistically Appropriate Notices.* PHS Act section 2719 requires group health plans and health insurance issuers to provide relevant notices in a culturally and linguistically appropriate manner. The July 2010 regulations set forth a requirement to provide notices in a non-English language based on separate thresholds of the number of people who are literate in the same non-English language. In the group market, the threshold set forth in the July 2010 regulations differs depending on the number of participants in the plan as follows:

- For a plan that covers fewer than 100 participants at the beginning of a plan year, the threshold is 25 percent of all plan participants being literate only in the same non-English language.
- For a plan that covers 100 or more participants at the beginning of a plan year, the threshold is the lesser of 500 participants, or 10 percent of all plan participants, being literate only in the same non-English language.[43]

For the individual market, the threshold is 10 percent of the population residing in the county being literate only in the same non-English language.[44]

Under the July 2010 regulations, if an applicable threshold is met with respect to a non-English language, the plan or issuer must provide the notice upon request in the non-English language. Additionally, the plan or issuer must include a statement in the English versions of all notices, prominently displayed in the non-English language, offering the provision of such notices in the non-English language. Finally, to the extent the plan or issuer maintains a customer assistance process (such as a telephone hotline) that answers questions or provides assistance with filing claims and appeals, the plan or issuer must provide such assistance in the non-English language.

As discussed earlier in this preamble, the Departments received comments that raised concerns regarding the burdens imposed by this provision. In response to these comments, the Departments have decided to amend the July 2010 regulations' provisions related to the provision of notices in a culturally and linguistically appropriate manner to establish a single threshold with respect to the number of people who are literate only in the same non-English language for both the group and individual markets. Under the amended provision, for group health plans and health insurance issuers offering group or individual health insurance coverage, the threshold percentage of people who are literate only in the same non-English language will be set at 10 percent or more of the population residing in the claimant's county, as determined based on American Community Survey (ACS) data published by the United States Census Bureau. Table 2, below provides a chart listing those 255 U.S. counties (78/255 are in Puerto Rico) in which at least 10 percent of the population speak a particular non-English language and speak English less than ''very well.'' These data are applicable for 2011 and are calculated using 2005–2009 ACS data. The Departments will update this guidance annually on their Web site if there are changes to the list of the counties determined to meet this 10 percent threshold for the county's population being literate only in the same non-English language.

[42] In addition, the claimant would be entitled, upon written request, to an explanation of the plan's or issuer's basis for asserting that it meets this standard, so that the claimant could make an informed judgment about whether to seek immediate review. Finally, if the external reviewer or the court rejects the claimant's request for immediate review on the basis that the plan met this standard, this amendment would give the claimant the right to resubmit and pursue the internal appeal of the claim.

[43] These thresholds were adapted from the DOL regulations regarding style and format for a summary plan description, at 29 CFR 2520.102–2(c) for participants who are not literate in English.

[44] The individual market threshold was generally adapted from the approach used under the Medicare Advantage program, which required translation of materials in languages spoken by more than 10 percent of the general population in a service area at the time the threshold was established.

TABLE 2—PERCENT OF THE COUNTY POPULATION THAT SPEAK A PARTICULAR NON-ENGLISH LANGUAGE AND SPEAK ENGLISH LESS THAN "VERY WELL", BY U.S. COUNTY [45]

State	County	Non-English language			
		Spanish %	Chinese %	Tagalog %	Navajo %
AK	Aleutians West Census Area	13		16	
AK	Aleutians East Borough			35	
AR	Sevier County	17			
AZ	Apache County				12
AZ	Maricopa County	11			
AZ	Yuma County	22			
AZ	Santa Cruz County	39			
CA	Colusa County	27			
CA	Fresno County	15			
CA	Glenn County	14			
CA	Imperial County	32			
CA	Kern County	16			
CA	Kings County	18			
CA	Los Angeles County	19			
CA	Madera County	18			
CA	Merced County	20			
CA	Monterey County	25			
CA	Napa County	14			
CA	Orange County	14			
CA	Riverside County	15			
CA	San Benito County	21			
CA	San Bernardino County	15			
CA	San Diego County	11			
CA	San Francisco County		12		
CA	San Joaquin County	12			
CA	Santa Barbara County	15			
CA	Santa Cruz County	12			
CA	Stanislaus County	13			
CA	Sutter County	12			
CA	Tulare County	21			
CA	Ventura County	14			
CO	Adams County	12			
CO	Costilla County	11			
CO	Denver County	12			
CO	Eagle County	16			
CO	Garfield County	12			
CO	Lake County	11			
CO	Phillips County	12			
CO	Prowers County	12			
CO	Saguache County	15			
CO	Yuma County	10			
FL	Collier County	13			
FL	DeSoto County	21			
FL	Glades County	10			
FL	Hardee County	22			
FL	Hendry County	26			
FL	Miami-Dade County	31			
FL	Okeechobee County	12			
FL	Osceola County	16			
GA	Atkinson County	12			
GA	Echols County	20			
GA	Hall County	16			
GA	Telfair County	10			
GA	Whitfield County	18			
IA	Buena Vista County	12			
ID	Clark County	22			
ID	Minidoka County	11			
ID	Owyhee County	12			
ID	Power County	13			
IL	Kane County	15			
KS	Finney County	16			
KS	Ford County	23			
KS	Grant County	16			
KS	Hamilton County	11			
KS	Seward County	26			
KS	Stanton County	19			
KS	Stevens County	11			
KS	Wichita County	12			

TABLE 2—PERCENT OF THE COUNTY POPULATION THAT SPEAK A PARTICULAR NON-ENGLISH LANGUAGE AND SPEAK ENGLISH LESS THAN "VERY WELL", BY U.S. COUNTY [45]—Continued

State	County	Non-English language			
		Spanish %	Chinese %	Tagalog %	Navajo %
KS	Wyandotte County	10			
NC	Alleghany County	14			
NC	Duplin County	14			
NE	Colfax County	23			
NE	Dakota County	14			
NE	Dawson County	15			
NJ	Hudson County	18			
NJ	Passaic County	16			
NJ	Union County	13			
NM	Chaves County	11			
NM	Dona Ana County	18			
NM	Hidalgo County	12			
NM	Lea County	11			
NM	Luna County	18			
NM	McKinley County				15
NM	Mora County	11			
NM	Santa Fe County	12			
NM	Chaves County	11			
NV	Clark County,	11			
NY	Bronx County	20			
NY	New York County	10			
NY	Queens County	12			
OK	Texas County	18			
OR	Hood River County	15			
OR	Marion County	11			
OR	Morrow County	14			
TX	Andrews County	11			
TX	Atascosa County	11			
TX	Bailey County	18			
TX	Bexar County	12			
TX	Brooks County	18			
TX	Calhoun County	12			
TX	Cameron County	30			
TX	Camp County	11			
TX	Castro County	20			
TX	Cochran County	18			
TX	Concho County	29			
TX	Crane County	10			
TX	Crockett County	20			
TX	Crosby County	11			
TX	Culberson County	15			
TX	Dallam County	12			
TX	Dallas County	18			
TX	Dawson County	12			
TX	Deaf Smith County	20			
TX	Dimmit County	33			
TX	Duval County	26			
TX	Ector County	12			
TX	Edwards County	10			
TX	El Paso County	29			
TX	Frio County	16			
TX	Garza County	35			
TX	Gonzales County	14			
TX	Hale County	12			
TX	Hall County	14			
TX	Hansford County	16			
TX	Harris County	18			
TX	Hidalgo County	35			
TX	Howard County	16			
TX	Hudspeth County	31			
TX	Jim Hogg County	26			
TX	Jim Wells County	13			
TX	Karnes County	17			
TX	Kenedy County	14			
TX	Kinney County	15			
TX	Kleberg County	11			
TX	La Salle County	22			
TX	Lamb County	15			

TABLE 2—PERCENT OF THE COUNTY POPULATION THAT SPEAK A PARTICULAR NON-ENGLISH LANGUAGE AND SPEAK ENGLISH LESS THAN "VERY WELL", BY U.S. COUNTY [45]—Continued

State	County	Non-English language			
		Spanish %	Chinese %	Tagalog %	Navajo %
TX	Lipscomb County	14			
TX	Lynn County	12			
TX	Maverick County	48			
TX	Midland County	11			
TX	Moore County	19			
TX	Nueces County	12			
TX	Ochiltree County	17			
TX	Parmer County	22			
TX	Pecos County	18			
TX	Presidio County	36			
TX	Reagan County	21			
TX	Reeves County	27			
TX	San Patricio County	12			
TX	Schleicher County	12			
TX	Sherman County	14			
TX	Starr County	43			
TX	Sterling County	11			
TX	Sutton County	18			
TX	Tarrant County	10			
TX	Terrell County	12			
TX	Terry County	11			
TX	Titus County	20			
TX	Travis County	12			
TX	Upton County	11			
TX	Uvalde County	15			
TX	Val Verde County	29			
TX	Ward County	12			
TX	Webb County	49			
TX	Willacy County	20			
TX	Winkler County	13			
TX	Yoakum County	23			
TX	Zapata County	36			
TX	Zavala County	33			
UT	San Juan County				12
VA	Manassas city	17			
VA	Manassas Park city	18			
WA	Adams County	23			
WA	Douglas County	11			
WA	Franklin County	27			
WA	Grant County	16			
WA	Yakima County	17			
PR	Anasco Municipio	85			
PR	Adjuntas Municipio	86			
PR	Aguada Municipio	81			
PR	Aguadilla Municipio	78			
PR	Aguas Buenas Municipio	90			
PR	Aibonito Municipio	82			
PR	Arecibo Municipio	83			
PR	Arroyo Municipio	84			
PR	Barceloneta Municipio	78			
PR	Barranquitas Municipio	87			
PR	Bayamon Municipio	78			
PR	Cabo Rojo Municipio	82			
PR	Caguas Municipio	80			
PR	Camuy Municipio	88			
PR	Canovanas Municipio	83			
PR	Carolina Municipio	77			
PR	Catano Municipio	82			
PR	Cayey Municipio	86			
PR	Ceiba Municipio	73			
PR	Ciales Municipio	88			
PR	Cidra Municipio	86			
PR	Coamo Municipio	84			
PR	Comero Municipio	93			
PR	Corozal Municipio	88			
PR	Culebra Municipio	76			
PR	Dorado Municipio	77			
PR	Fajardo Municipio	78			

TABLE 2—PERCENT OF THE COUNTY POPULATION THAT SPEAK A PARTICULAR NON-ENGLISH LANGUAGE AND SPEAK ENGLISH LESS THAN "VERY WELL", BY U.S. COUNTY [45]—Continued

State	County	Non-English language			
		Spanish %	Chinese %	Tagalog %	Navajo %
PR	Florida Municipio	81			
PR	Guayama Municipio	80			
PR	Guayanilla Municipio	85			
PR	Guaynabo Municipio	69			
PR	Gurabo Municipio	81			
PR	Gußnica Municipio	83			
PR	Hatillo Municipio	86			
PR	Hormigueros Municipio	74			
PR	Humacao Municipio	83			
PR	Isabela Municipio	85			
PR	Jayuya Municipio	91			
PR	Juana Diaz Municipio	86			
PR	Juncos Municipio	85			
PR	Lajas Municipio	83			
PR	Lares Municipio	87			
PR	Las Marias Municipio	91			
PR	Las Piedras Municipio	85			
PR	Loiza Municipio	89			
PR	Luquillo Municipio	79			
PR	Manati Municipio	84			
PR	Maricao Municipio	95			
PR	Maunabo Municipio	88			
PR	Mayaguez Municipio	77			
PR	Moca Municipio	86			
PR	Morovis Municipio	87			
PR	Naguabo Municipio	83			
PR	Naranjito Municipio	91			
PR	Orocovis Municipio	91			
PR	Patillas Municipio	84			
PR	Penuelas Municipio	86			
PR	Ponce Municipio	80			
PR	Quebradillas Municipio	83			
PR	Rincon Municipio	73			
PR	Rio Grande Municipio	85			
PR	Sabana Grande Municipio	83			
PR	Salinas Municipio	86			
PR	San German Municipio	85			
PR	San Juan Municipio	73			
PR	San Lorenzo Municipio	83			
PR	San Sebastian Municipio	84			
PR	Santa Isabel Municipio	86			
PR	Toa Alta Municipio	80			
PR	Toa Baja Municipio	80			
PR	Trujillo Alto Municipio	79			
PR	Utuado Municipio	83			
PR	Vega Alta Municipio	83			
PR	Vega Baja Municipio	76			
PR	Vieques Municipio	83			
PR	Villalba Municipio	88			
PR	Yabucoa Municipio	86			
PR	Yauco Municipio	85			

These amendments also require each notice sent by a plan or issuer to an address in a county that meets this threshold to include a one-sentence statement in the relevant non-English language about the availability of language services to be provided by the Departments. The Departments have provided guidance with sample sentences in the relevant languages in separate guidance being issued contemporaneous with the publication of this amendment.

In addition to including a statement in all notices in the relevant non-English language, a plan or issuer would be required to provide a customer assistance process (such as a telephone hotline) with oral language services in the non-English language and provide written notices in the non-English language upon request.

The Departments expect that the largest cost associated with the amended rules for culturally and linguistically appropriate notices will be for plans and issuers to provide notices in the applicable non-English language upon request. Based on the ACS data, the Departments estimate that there are about 12 million individuals living in

[45] Data are from the 2005–2009 ACS available at *http://www.census.gov/acs*. Only those counties where at least 10% of the county speak a particular non-English language and speak English less than "very well" are listed.

covered counties that are literate in a non-English Language. The ACS did not start collecting insurance coverage information until 2008. Therefore, to estimate the percentage of the 12 million affected individuals that were insured, the Departments used the percentage of the population in the State that reported being insured by private or public employer insurance or in the individual market from the 2009 Current Population Survey (CPS).[46] This results in an estimate of approximately seven million individuals who are eligible to request translation services.

In discussions with the regulated community, the Departments found that experience in California, which has a State law requirement for providing translation services, indicates that requests for translations of written documents averages 0.098 requests per 1,000 members. While the California law is not identical to the amendment to the July 2010 regulations, and the demographics for California do not match other counties, for purposes of this analysis, the Departments used this percentage to estimate of the number of translation service requests that plan and issuers can expect to receive. Industry experts also told the Departments that while the cost of translation services varies, $500 per document is a reasonable approximation of translation cost.

Using the ACS and the CPS, the Departments estimate 34 million insured lives in the affected counties. Based on the foregoing, the Departments estimate that the cost to provide translation services will be approximately $1.7 million annually (34,087,000 lives * 0.098/1000 * $500).

e. *Duration of the transition period for State external review processes.* These amendments to the July 2010 regulations modify the transition period under paragraph (c)(3) so that the last day of the transition period is December 31, 2011. Modifying the transition period gives states additional time to implement State external review processes that conform to paragraph (c)(2). This modification produces benefits and costs to participants and beneficiaries depending upon which state they live in and the timing of the beginning of the plan year. HHS is working closely with states to help them have external review processes that meet the requirements of paragraph (c)(2). The July 2010 regulations would have participants living in states with laws that do not meet the minimum consumer protections in paragraph (c)(2) entering the Federal external review process that would provide more consumer protections. However, this requirement to enter the Federal external review process would take effect upon the start of a new plan year beginning on or after July 1, 2011.

This modification delays coverage of external review for participants whose plan year would have started between July 1, 2011 and December 31, 2011, but provides coverage sooner for participants in plans with plan years beginning after January 1, 2012, and has no change for participants in plans with plan years beginning on January 1, 2012.

The annual reporting form for certain ERISA covered health plans, the Form 5500, has information on health plan year end dates and also the number of participants in health plans. While most health plans with less than 100 participants are not required to file the Form 5500, the Departments are able to observe the plan year end dates and hence the plan year start dates for large plans. The Departments looked at the dispersion of plan year start dates for plans that filed the Form 5500 and found that nearly 76 percent of participants are in plans with a plan year start date of January 1, 2012 and hence will not be effected by the change in the rule; nearly 13 percent of participants are in plans that could possibly see a delay in receiving the protections of external review, while just over 10 percent of participants will be able to access the protections sooner. These estimates did not take into account the state in which the plan was located. The Departments do not have data on the start date of policies in the individual market. While on net about 2.4 percent of participants in affected plans could see a delay in receiving the protections, these costs are offset by giving states, and issuers additional time, and hence lower costs, to prepare for complying with the rule.

f. *Scope of Federal External Review.* Paragraph (d)(1) of the July 2010 regulations provides that any adverse benefit determination (including a final internal adverse benefit determination) could be brought to the Federal external review process unless it related to a participant's or beneficiary's failure to meet the requirements for eligibility under the terms of a group health plan (*i.e.,* worker classification and similar issues were not within the scope of the Federal external review process). As discussed earlier in this preamble, comments received in response to the July 2010 regulations indicate that the scope of external review claims was too broad.

After considering all the comments, with respect to plans subject to the Federal external review process, for claims for which external review has not been initiated before September 20, 2011, the amendment suspends the original rule in the July 2010 regulations regarding the scope of claims eligible for external review for plans using the Federal process, temporarily replacing it with a different scope. Specifically, this amendment suspends the broad scope of claims eligible for external review and narrows the scope to those that involve (1) medical judgment (excluding those that involve only contractual or legal interpretation without any use of medical judgment), as determined by the external reviewer; or (2) a rescission of coverage. The suspension is intended to give the marketplace time to adjust to providing external review. The Departments believe that, once the market has so adjusted, it will become clear that the benefits of the July 2010 regulations' broader scope would be likely to justify its costs.

C. Regulatory Flexibility Act—Department of Labor and Department of Health and Human Services

The Regulatory Flexibility Act (5 U.S.C. 601 *et seq.*) (RFA) imposes certain requirements with respect to Federal rules that are subject to the notice and comment requirements of section 553(b) of the APA (5 U.S.C. 551 *et seq.*) and that are likely to have a significant economic impact on a substantial number of small entities. Under Section 553(b) of the APA, a general notice of proposed rulemaking is not required when an agency, for good cause, finds that notice and public comment thereon are impracticable, unnecessary, or contrary to the public interest. The interim final regulations were exempt from the APA, because the Departments made a good cause finding that a general notice of proposed rulemaking is not necessary earlier in this preamble. Therefore, the RFA did not apply and the Departments were not required to either certify that the regulations or this amendment would not have a significant economic impact on a substantial number of small entities or conduct a regulatory flexibility analysis.

Nevertheless, the Departments carefully considered the likely impact of the rule on small entities in connection with their assessment under Executive Order 12866. Consistent with the policy of the RFA, the Departments encourage the public to submit comments that suggest alternative rules that accomplish

[46] Please note that using state estimates of insurance coverage could lead to an over estimate if those reporting in the ACS survey that they speak English less than ''very well'' are less likely to be insured than the state average.

the stated purpose of the Affordable Care Act and minimize the impact on small entities.

D. Special Analyses—Department of the Treasury

Notwithstanding the determinations of the Department of Labor and Department of Health and Human Services, for purposes of the Department of the Treasury, it has been determined that this Treasury decision is not a significant regulatory action for purposes of Executive Order 12866. Therefore, a regulatory assessment is not required. It has also been determined that section 553(b) of the APA (5 U.S.C. chapter 5) does not apply to these temporary regulations. For the applicability of the RFA, refer to the Special Analyses section in the preamble to the cross-referencing notice of proposed rulemaking published elsewhere in this issue of the **Federal Register**. Pursuant to section 7805(f) of the Code, these temporary regulations have been submitted to the Chief Counsel for Advocacy of the Small Business Administration for comment on their impact on small businesses.

E. Paperwork Reduction Act

1. Department of Labor and Department of the Treasury

Currently, the Departments are soliciting 60 days of public comments concerning these disclosures. The Departments have submitted a copy of these interim final regulations to OMB in accordance with 44 U.S.C. 3507(d) for review of the information collections. The Departments and OMB are particularly interested in comments that:

- Evaluate whether the collection of information is necessary for the proper performance of the functions of the agency, including whether the information will have practical utility;
- Evaluate the accuracy of the agency's estimate of the burden of the collection of information, including the validity of the methodology and assumptions used;
- Enhance the quality, utility, and clarity of the information to be collected; and
- Minimize the burden of the collection of information on those who are to respond, including through the use of appropriate automated, electronic, mechanical, or other technological collection techniques or other forms of information technology, for example, by permitting electronic submission of responses.

Comments should be sent to the Office of Information and Regulatory Affairs, Attention: Desk Officer for the Employee Benefits Security Administration either by fax to (202) 395–7285 or by e-mail to *oira_submission@omb.eop.gov.* A copy of the ICR may be obtained by contacting the PRA addressee: G. Christopher Cosby, Office of Policy and Research, U.S. Department of Labor, Employee Benefits Security Administration, 200 Constitution Avenue, NW., Room N–5718, Washington, DC 20210. Telephone: (202) 693–8410; Fax: (202) 219–4745. These are not toll-free numbers. E-mail: *ebsa.opr@dol.gov.* ICRs submitted to OMB also are available at reginfo.gov (*http://www.reginfo.gov/public/do/PRAMain*).

a. Department of Labor and Department of the Treasury: Affordable Care Act Internal Claims and Appeals and External Review Disclosures for Non-Grandfathered Plans

These amendments make two changes to the interim final regulations that affect the paperwork burden. The first is an amendment no longer requiring that diagnosis and treatment codes be included on notices of adverse benefit determination and final internal adverse benefit determination. Instead, they must notify claimants of the opportunity to receive the codes on request and plans and issuers must provide the codes upon request. The Departments expect that this change will lower costs, because plans and issuers no longer will have to provide the codes on the notices. Plans and issuers will incur a cost to establish procedures for receive, process, and mail the codes upon request; however, the Departments are unable to estimate such cost due to a lack of a basis for an estimate of the number of requests that will be made for the codes.

The amendments also change the method for determining who is eligible to receive a notice in a culturally and linguistically appropriate manner, and the information that must be provided to such persons. The previous rule was based on the number of employees at a firm. The new rule is based on whether a participant or beneficiary resides in a county where ten percent or more of the population residing in the county is literate only in the same non-English language.

Participants and beneficiaries residing in an affected county and speaking an applicable non-English language will now receive a one-sentence statement in all notices written in the applicable non-English language about the availability of language services. In addition to including the statement, plan and issuers are required to provide a customer assistance process (such as a telephone hotline) with oral language services in the non-English language and provide written notices in the non-English language upon requests.

The Departments understand that oral translation services are already provided for nearly all covered participants and beneficiaries. Therefore, no additional burden is associated with this requirement of the amendment. The Departments estimate that plans will incur an annual cost burden of $1.2 million to translate written notices into the relevant non-English language.[47]

Based on the foregoing, the Departments have adjusted the total estimated cost burden for this information collection. The cost burden is $243,000 in 2011, $1.7 million in 2012, and $1.8 million in 2013.

Type of Review: Revised collection.

Agencies: Employee Benefits Security Administration, Department of Labor; Internal Revenue Service, U.S. Department of the Treasury,

Title: Affordable Care Act Internal Claims and Appeals and External Review Disclosures for Non-Grandfathered Plans.

OMB Number: 1210–0144; 1545–2182.

Affected Public: Business or other for-profit; not-for-profit institutions.

Total Respondents: 1,020,000 (three-year average).

Total Responses: 111,000(three-year average).

Frequency of Response: Occasionally.

Estimated Total Annual Burden Hours: 233 hours (Employee Benefits Security Administration); 233 hours (Internal Revenue Service) (three-year average).

Estimated Total Annual Burden Cost: $628,900 (Employee Benefits Security Administration); $628,900 (Internal Revenue Service) (three-year average).

2. Department of Health and Human Services

a. ICR Regarding Affordable Care Act Internal Claims and Appeals and External Review Disclosures for Non-grandfathered Plans

As discussed above in the Department of Labor and Department of the Treasury PRA section, these amendments make two changes to the interim final regulations that affect the paperwork burden. The first is an amendment no longer requiring that diagnosis and treatment codes be included on notices of adverse benefit determination and final internal adverse benefit

[47] The Department's methodology for this estimate is explained in IV, B, 2, d, above.

determination. Instead these codes are available upon request. The Departments expect that this change will lower costs compared to the July 2010 regulations because plans and issuers no longer will have to provide the codes on the notices. Plans and issuers will incur a cost to establish procedures for receiving, processing, and mailing the codes upon request; however, the Departments are unable to estimate such cost due to lack of a basis for an estimate of the number of requests that will be made for the codes. Second, the amendments also changes who is eligible to receive a notice in a culturally or linguistically appropriate manner.

The Departments estimated the new cost burden of providing the translation of requested notices into the applicable non-English language. The annual cost burden is estimated to be $430,000 annually starting in 2012. The derivation of this estimate was discussed above in the Economic Impact section.

Due to the amendments, the Department has adjusted the total estimated costs of this information collection. The Department estimates that State and local governmental plans and issuers offering coverage in the individual market will incur a total hour burden of 570,804 hours in 2011, 998,807 hours in 2012, and 1.22 million hours in 2013 to comply with equivalent costs of $28.2 million in 2011, $57.4 million in 2012, and $70.5 million in 2013. The total cost burden for those plans that use service providers, including the cost of mailing all responses is estimated to be $20.7 million in 2011, $37.9 million in 2012, and $51.7 million in 2013.

The hour and cost burden is summarized below:

Type of Review: Revised collection.

Agency: Department of Health and Human Services.

Title: Affordable Care Act Internal Claims and Appeals and External Review Disclosures

OMB Number: 0938–1099.

Affected Public: Business; State, Local, or Tribal Governments.

Respondents: 46,773 (three-year average).

Responses: 218,650,000 (three-year average).

Frequency of Response: Occasionally.

Estimated Total Annual Burden Hours: 929,870 hours (three-year average).

Estimated Total Annual Burden Cost: $36,600,000 (three-year average).

We have requested emergency OMB review and approval of the aforementioned information collection requirements by July 1, 2011. To obtain copies of the supporting statement and any related forms for the proposed paperwork collections referenced above, access CMS' Web site at *http://www.cms.gov/PaperworkReductionActof1995/PRAL/list.asp#TopOfPage* or e-mail your request, including your address, phone number, OMB number, and CMS document identifier, to *Paperwork@cms.hhs.gov,* or call the Reports Clearance Office at 410–786–1326.

If you comment on any of these information collection requirements, please do either of the following:

1. Submit your comments electronically as specified in the **ADDRESSES** section of this proposed rule; or

2. Submit your comments to the Office of Information and Regulatory Affairs, Office of Management and Budget,

Attention: CMS Desk Officer, CMS–9993–IFC2

Fax: (202) 395–6974; or

E-mail: *OIRA_submission@omb.eop.gov*

F. Congressional Review Act

These amendments to the interim final regulations are subject to the Congressional Review Act provisions of the Small Business Regulatory Enforcement Fairness Act of 1996 (5 U.S.C. 801 *et seq.*) and have been transmitted to Congress and the Comptroller General for review.

G. Unfunded Mandates Reform Act

The Unfunded Mandates Reform Act of 1995 (Pub. L. 104–4) requires agencies to prepare several analytic statements before proposing any rules that may result in annual expenditures of $100 million (as adjusted for inflation) by State, local and tribal governments or the private sector. These amendments to the interim final regulations are not subject to the Unfunded Mandates Reform Act because they are being issued as interim final regulations. However, consistent with the policy embodied in the Unfunded Mandates Reform Act, the regulation has been designed to be the least burdensome alternative for State, local and tribal governments, and the private sector, while achieving the objectives of the Affordable Care Act.

H. Federalism Statement—Department of Labor and Department of Health and Human Services

Executive Order 13132 outlines fundamental principles of federalism, and requires the adherence to specific criteria by Federal agencies in the process of their formulation and implementation of policies that have ''substantial direct effects'' on the States, the relationship between the national government and States, or on the distribution of power and responsibilities among the various levels of government. Federal agencies promulgating regulations that have federalism implications must consult with State and local officials, and describe the extent of their consultation and the nature of the concerns of State and local officials in the preamble to the regulation.

In the Departments' view, these amendments to the interim final regulations have federalism implications, because they have direct effects on the States, the relationship between the national government and States, or on the distribution of power and responsibilities among various levels of government. However, in the Departments' view, the federalism implications of these interim final regulations are substantially mitigated because, with respect to health insurance issuers, the Departments expect that the majority of States will enact laws or take other appropriate action to implement an internal and external appeals process that will meet or exceed federal standards.

In general, through section 514, ERISA supersedes State laws to the extent that they relate to any covered employee benefit plan, and preserves State laws that regulate insurance, banking, or securities. While ERISA prohibits States from regulating a plan as an insurance or investment company or bank, the preemption provisions of section 731 of ERISA and section 2724 of the PHS Act (implemented in 29 CFR 2590.731(a) and 45 CFR 146.143(a)) apply so that the HIPAA requirements (including those of the Affordable Care Act) are not to be ''construed to supersede any provision of State law which establishes, implements, or continues in effect any standard or requirement solely relating to health insurance issuers in connection with group health insurance coverage except to the extent that such standard or requirement prevents the application of a requirement'' of a Federal standard. The conference report accompanying HIPAA indicates that this is intended to be the ''narrowest'' preemption of State laws. (See House Conf. Rep. No. 104–736, at 205, reprinted in 1996 U.S. Code Cong. & Admin. News 2018.) States may continue to apply State law requirements except to the extent that such requirements prevent the application of the Affordable Care Act

requirements that are the subject of this rulemaking. State insurance laws that are more stringent than the Federal requirements are unlikely to ''prevent the application of'' the Affordable Care Act, and be preempted. Accordingly, States have significant latitude to impose requirements on health insurance issuers that are more restrictive than the Federal law. Furthermore, the Departments have opined that, in the instance of a group health plan providing coverage through group health insurance, the issuer will be required to follow the external review procedures established in State law (assuming the State external review procedure meets the minimum standards set out in these interim final rules).

In compliance with the requirement of Executive Order 13132 that agencies examine closely any policies that may have federalism implications or limit the policy making discretion of the States, the Departments have engaged in efforts to consult with and work cooperatively with affected State and local officials, including attending conferences of the National Association of Insurance Commissioners (NAIC), meeting with NAIC staff counsel on issues arising from the interim final regulations and consulting with State insurance officials on an individual basis. It is expected that the Departments will act in a similar fashion in enforcing the Affordable Care Act requirements, including the provisions of section 2719 of the PHS Act. Throughout the process of developing these amendments to the interim final regulations, to the extent feasible within the specific preemption provisions of HIPAA as it applies to the Affordable Care Act, the Departments have attempted to balance the States' interests in regulating health insurance issuers, and Congress' intent to provide uniform minimum protections to consumers in every State. By doing so, it is the Departments' view that they have complied with the requirements of Executive Order 13132.

Pursuant to the requirements set forth in section 8(a) of Executive Order 13132, and by the signatures affixed to these regulations, the Departments certify that the Employee Benefits Security Administration and the Centers for Medicare and Medicaid Services have complied with the requirements of Executive Order 13132 for the attached amendment to the interim final regulations in a meaningful and timely manner.

V. Statutory Authority

The Department of the Treasury temporary regulations are adopted pursuant to the authority contained in sections 7805 and 9833 of the Code.

The Department of Labor interim final regulations are adopted pursuant to the authority contained in 29 U.S.C. 1027, 1059, 1135, 1161–1168, 1169, 1181–1183, 1181 note, 1185, 1185a, 1185b, 1191, 1191a, 1191b, and 1191c; sec. 101(g), Pub. L. 104–191, 110 Stat. 1936; sec. 401(b), Pub. L. 105–200, 112 Stat. 645 (42 U.S.C. 651 note); sec. 512(d), Pub. L. 110–343, 122 Stat. 3881; sec. 1001, 1201, and 1562(e), Pub. L. 111–148, 124 Stat. 119, as amended by Pub. L. 111–152, 124 Stat. 1029; Secretary of Labor's Order 6–2009, 74 FR 21524 (May 7, 2009).

The Department of Health and Human Services interim final regulations are adopted pursuant to the authority contained in sections 2701 through 2763, 2791, and 2792 of the PHS Act (42 U.S.C. 300gg through 300gg–63, 300gg–91, and 300gg–92), as amended.

List of Subjects

26 CFR Part 54

Excise taxes, Health care, Health insurance, Pensions, Reporting and recordkeeping requirements.

29 CFR Part 2590

Continuation coverage, Disclosure, Employee benefit plans, Group health plans, Health care, Health insurance, Medical child support, Reporting and recordkeeping requirements.

45 CFR Part 147

Health care, Health insurance, Reporting and recordkeeping requirements, and State regulation of health insurance.

Steven T. Miller,

Deputy Commissioner for Services and Enforcement, Internal Revenue Service.

Approved: June 21, 2011.

Emily S. McMahon,

Acting Assistant Secretary of the Treasury (Tax Policy).

Signed this 20th day of June 2011.

Phyllis C. Borzi,

Assistant Secretary, Employee Benefits Security Administration, Department of Labor.

CMS–9993–IFC2

Approved: June 16, 2011.

Donald Berwick,

Administrator, Centers for Medicare & Medicaid Services.

Approved: June 17, 2011.

Kathleen Sebelius,

Secretary, Department of Health and Human Services.

Department of the Treasury

Internal Revenue Service

26 CFR Chapter I

Accordingly, 26 CFR part 54 is amended as follows:

PART 54—PENSION EXCISE TAXES

■ **Paragraph 1.** The general authority citation for part 54 continues to read as follows:

Authority: 26 U.S.C. 7805 * * *

■ **Par. 2.** Section 54.9815–2719T is amended by:

■ 1. Revising paragraphs (b)(2)(ii)(B), (b)(2)(ii)(E)(*1*), (b)(2)(ii)(F), (c)(2)(xi), (c)(3), (d)(1), (d)(2)(iv) and (e).

■ 2. Redesignating (b)(2)(ii)(E)(*2*), (b)(2)(ii)(E)(*3*), and (b)(2)(ii)(E)(*4*) as (b)(2)(ii)(E)(*3*), (b)(2)(ii)(E)(*4*), and (b)(2)(ii)(E)(*5*), respectively.

■ 3. Adding new paragraph (b)(2)(ii)(E)(*2*).

The revisions and addition read as follows:

§ 54.9815–2719T Internal claims and appeals and external review processes (temporary).

* * * * *

(b) * * *

(2) * * *

(ii) * * *

(B) *Expedited notification of benefit determinations involving urgent care.* The requirements of 29 CFR 2560.503–1(f)(2)(i) (which generally provide, among other things, in the case of urgent care claims for notification of the plan's benefit determination (whether adverse or not) as soon as possible, taking into account the medical exigencies, but not later than 72 hours after receipt of the claim) continue to apply to the plan and issuer. For purposes of this paragraph (b)(2)(ii)(B), a claim involving urgent care has the meaning given in 29 CFR 2560.503–1(m)(1), as determined by the attending provider, and the plan or issuer shall defer to such determination of the attending provider.

* * * * *

(E) * * *

(*1*) The plan and issuer must ensure that any notice of adverse benefit determination or final internal adverse benefit determination includes information sufficient to identify the

claim involved (including the date of service, the health care provider, the claim amount (if applicable), and a statement describing the availability, upon request, of the diagnosis code and its corresponding meaning, and the treatment code and its corresponding meaning).

(*2*) The plan and issuer must provide to participants and beneficiaries, as soon as practicable, upon request, the diagnosis code and its corresponding meaning, and the treatment code and its corresponding meaning, associated with any adverse benefit determination or final internal adverse benefit determination. The plan or issuer must not consider a request for such diagnosis and treatment information, in itself, to be a request for an internal appeal under this paragraph (b) or an external review under paragraphs (c) and (d) of this section.

* * * * *

(F) *Deemed exhaustion of internal claims and appeals processes*—(*1*) In the case of a plan or issuer that fails to adhere to all the requirements of this paragraph (b)(2) with respect to a claim, the claimant is deemed to have exhausted the internal claims and appeals process of this paragraph (b), except as provided in paragraph (b)(2)(ii)(F)(*2*) of this section. Accordingly, the claimant may initiate an external review under paragraph (c) or (d) of this section, as applicable. The claimant is also entitled to pursue any available remedies under section 502(a) of ERISA or under State law, as applicable, on the basis that the plan or issuer has failed to provide a reasonable internal claims and appeals process that would yield a decision on the merits of the claim. If a claimant chooses to pursue remedies under section 502(a) of ERISA under such circumstances, the claim or appeal is deemed denied on review without the exercise of discretion by an appropriate fiduciary.

(*2*) Notwithstanding paragraph (b)(2)(ii)(F)(*1*) of this section, the internal claims and appeals process of this paragraph (b) will not be deemed exhausted based on *de minimis* violations that do not cause, and are not likely to cause, prejudice or harm to the claimant so long as the plan or issuer demonstrates that the violation was for good cause or due to matters beyond the control of the plan or issuer and that the violation occurred in the context of an ongoing, good faith exchange of information between the plan and the claimant. This exception is not available if the violation is part of a pattern or practice of violations by the plan or issuer. The claimant may request a written explanation of the violation from the plan or issuer, and the plan or issuer must provide such explanation within 10 days, including a specific description of its bases, if any, for asserting that the violation should not cause the internal claims and appeals process of this paragraph (b) to be deemed exhausted. If an external reviewer or a court rejects the claimant's request for immediate review under paragraph (b)(2)(ii)(F)(*1*) of this section on the basis that the plan met the standards for the exception under this paragraph (b)(2)(ii)(F)(*2*), the claimant has the right to resubmit and pursue the internal appeal of the claim. In such a case, within a reasonable time after the external reviewer or court rejects the claim for immediate review (not to exceed 10 days), the plan shall provide the claimant with notice of the opportunity to resubmit and pursue the internal appeal of the claim. Time periods for re-filing the claim shall begin to run upon claimant's receipt of such notice.

* * * * *

(c) * * *

(2) * * *

(xi) The State process must provide that the decision is binding on the plan or issuer, as well as the claimant, except to the extent other remedies are available under State or Federal law, and except that the requirement that the decision be binding shall not preclude the plan or issuer from making payment on the claim or otherwise providing benefits at any time, including after a final external review decision that denies the claim or otherwise fails to require such payment or benefits. For this purpose, the plan or issuer must provide benefits (including by making payment on the claim) pursuant to the final external review decision without delay, regardless of whether the plan or issuer intends to seek judicial review of the external review decision and unless or until there is a judicial decision otherwise.

* * * * *

(3) *Transition period for external review processes.* (i) Through December 31, 2011, an applicable State external review process applicable to a health insurance issuer or group health plan is considered to meet the requirements of PHS Act section 2719(b). Accordingly, through December 31, 2011, an applicable State external review process will be considered binding on the issuer or plan (in lieu of the requirements of the Federal external review process). If there is no applicable State external review process, the issuer or plan is required to comply with the requirements of the Federal external review process in paragraph (d) of this section.

(ii) For final internal adverse benefit determinations (or, in the case of simultaneous internal appeal and external review, adverse benefit determinations) provided on or after January 1, 2012, the Federal external review process will apply unless the Department of Health and Human Services determines that a State law meets all the minimum standards of paragraph (c)(2) of this section.

(d) * * *

(1) *Scope*—(i) *In general.* Subject to the suspension provision in paragraph (d)(1)(ii) of this section and except to the extent provided otherwise by the Secretary in guidance, the Federal external review process established pursuant to this paragraph (d) applies to any adverse benefit determination or final internal adverse benefit determination (as defined in paragraphs (a)(2)(i) and (a)(2)(v) of this section), except that a denial, reduction, termination, or a failure to provide payment for a benefit based on a determination that a participant or beneficiary fails to meet the requirements for eligibility under the terms of a group health plan is not eligible for the Federal external review process under this paragraph (d).

(ii) *Suspension of general rule.* Unless or until this suspension is revoked in guidance by the Secretary, with respect to claims for which external review has not been initiated before September 20, 2011, the Federal external review process established pursuant to this paragraph (d) applies only to:

(A) An adverse benefit determination (including a final internal adverse benefit determination) by a plan or issuer that involves medical judgment (including, but not limited to, those based on the plan's or issuer's requirements for medical necessity, appropriateness, health care setting, level of care, or effectiveness of a covered benefit; or its determination that a treatment is experimental or investigational), as determined by the external reviewer; and

(B) A rescission of coverage (whether or not the rescission has any effect on any particular benefit at that time).

(iii) *Examples.* The rules of paragraph (d)(1)(ii) of this section are illustrated by the following examples:

Example 1. (i) *Facts.* A group health plan provides coverage for 30 physical therapy visits generally. After the 30th visit, coverage is provided only if the service is preauthorized pursuant to an approved treatment plan that takes into account medical necessity using the plan's definition

of the term. Individual *A* seeks coverage for a 31st physical therapy visit. *A's* health care provider submits a treatment plan for approval, but it is not approved by the plan, so coverage for the 31st visit is not preauthorized. With respect to the 31st visit, *A* receives a notice of final internal adverse benefit determination stating that the maximum visit limit is exceeded.

(ii) *Conclusion.* In this *Example 1,* the plan's denial of benefits is based on medical necessity and involves medical judgment. Accordingly, the claim is eligible for external review during the suspension period under paragraph (d)(1)(ii) of this section. Moreover, the plan's notification of final internal adverse benefit determination is inadequate under paragraphs (b)(2)(i) and (b)(2)(ii)(E)(*3*) of this section because it fails to make clear that the plan will pay for more than 30 visits if the service is preauthorized pursuant to an approved treatment plan that takes into account medical necessity using the plan's definition of the term. Accordingly, the notice of final internal adverse benefit determination should refer to the plan provision governing the 31st visit and should describe the plan's standard for medical necessity, as well as how the treatment fails to meet the plan's standard.

Example 2. (i) *Facts.* A group health plan does not provide coverage for services provided out of network, unless the service cannot effectively be provided in network. Individual *B* seeks coverage for a specialized medical procedure from an out-of-network provider because *B* believes that the procedure cannot be effectively provided in network. *B* receives a notice of final internal adverse benefit determination stating that the claim is denied because the provider is out-of-network.

(ii) *Conclusion.* In this *Example 2,* the plan's denial of benefits is based on whether a service can effectively be provided in network and, therefore, involves medical judgment. Accordingly, the claim is eligible for external review during the suspension period under paragraph (d)(1)(ii) of this section. Moreover, the plan's notice of final internal adverse benefit determination is inadequate under paragraphs (b)(2)(i) and (b)(2)(ii)(E)(*3*) of this section because the plan does provide benefits for services on an out-of-network basis if the services cannot effectively be provided in network. Accordingly, the notice of final internal adverse benefit determination is required to refer to the exception to the out-of-network exclusion and should describe the plan's standards for determining effectiveness of services, as well as how services available to the claimant within the plan's network meet the plan's standard for effectiveness of services.

* * * * *

(2) * * *

(iv) These standards will provide that an external review decision is binding on the plan or issuer, as well as the claimant, except to the extent other remedies are available under State or Federal law, and except that the requirement that the decision be binding shall not preclude the plan or issuer from making payment on the claim or otherwise providing benefits at any time, including after a final external review decision that denies the claim or otherwise fails to require such payment or benefits. For this purpose, the plan or issuer must provide any benefits (including by making payment on the claim) pursuant to the final external review decision without delay, regardless of whether the plan or issuer intends to seek judicial review of the external review decision and unless or until there is a judicial decision otherwise.

* * * * *

(e) *Form and manner of notice*—(1) *In general.* For purposes of this section, a group health plan and a health insurance issuer offering group health insurance coverage are considered to provide relevant notices in a culturally and linguistically appropriate manner if the plan or issuer meets all the requirements of paragraph (e)(2) of this section with respect to the applicable non-English languages described in paragraph (e)(3) of this section.

(2) *Requirements*—(i) The plan or issuer must provide oral language services (such as a telephone customer assistance hotline) that include answering questions in any applicable non-English language and providing assistance with filing claims and appeals (including external review) in any applicable non-English language;

(ii) The plan or issuer must provide, upon request, a notice in any applicable non-English language; and

(iii) The plan or issuer must include in the English versions of all notices, a statement prominently displayed in any applicable non-English language clearly indicating how to access the language services provided by the plan or issuer.

(3) *Applicable non-English language.* With respect to an address in any United States county to which a notice is sent, a non-English language is an applicable non-English language if ten percent or more of the population residing in the county is literate only in the same non-English language, as determined in guidance published by the Secretary.

* * * * *

Department of Labor

Employee Benefits Security Administration

29 CFR Chapter XXV

29 CFR part 2590 is amended as follows:

PART 2590—RULES AND REGULATIONS FOR GROUP HEALTH PLANS

■ 1. The authority citation for part 2590 continues to read as follows:

Authority: 29 U.S.C. 1027, 1059, 1135, 1161–1168, 1169, 1181–1183, 1181 note, 1185, 1185a, 1185b, 1191, 1191a, 1191b, and 1191c; sec. 101(g), Pub. L. 104–191, 110 Stat. 1936; sec. 401(b), Pub. L. 105–200, 112 Stat. 645 (42 U.S.C. 651 note); sec. 512(d), Pub. L. 110–343, 122 Stat. 3881; sec. 1001, 1201, and 1562(e), Pub. L. 111–148, 124 Stat. 119, as amended by Pub. L. 111–152, 124 Stat. 1029; Secretary of Labor's Order 6–2009, 74 FR 21524 (May 7, 2009).

■ 2. Section 2590.715–2719 is amended by:

■ 1. Revising paragraphs (b)(2)(ii)(B), (b)(2)(ii)(E)(*1*), (b)(2)(ii)(F), (c)(2)(xi), (c)(3), (d)(1), (d)(2)(iv), and (e).

■ 2. Redesignating (b)(2)(ii)(E)(*2*), (b)(2)(ii)(E)(*3*), and (b)(2)(ii)(E)(*4*) as (b)(2)(ii)(E)(*3*), (b)(2)(ii)(E)(*4*), and (b)(2)(ii)(E)(*5*), respectively.

■ 3. Adding new paragraph (b)(2)(ii)(E)(*2*).

The revisions and addition read as follows:

§ 2590.715–2719 Internal claims and appeals and external review processes.

* * * * *

(b) * * *

(2) * * *

(ii) * * *

(B) *Expedited notification of benefit determinations involving urgent care.* The requirements of 29 CFR 2560.503–1(f)(2)(i) (which generally provide, among other things, in the case of urgent care claims for notification of the plan's benefit determination (whether adverse or not) as soon as possible, taking into account the medical exigencies, but not later than 72 hours after receipt of the claim) continue to apply to the plan and issuer. For purposes of this paragraph (b)(2)(ii)(B), a claim involving urgent care has the meaning given in 29 CFR 2560.503–1(m)(1), as determined by the attending provider, and the plan or issuer shall defer to such determination of the attending provider.

* * * * *

(E) * * *

(*1*) The plan and issuer must ensure that any notice of adverse benefit determination or final internal adverse benefit determination includes information sufficient to identify the claim involved (including the date of service, the health care provider, the claim amount (if applicable), and a statement describing the availability, upon request, of the diagnosis code and its corresponding meaning, and the treatment code and its corresponding meaning).

(*2*) The plan and issuer must provide to participants and beneficiaries, as soon as practicable, upon request, the diagnosis code and its corresponding meaning, and the treatment code and its corresponding meaning, associated with any adverse benefit determination or final internal adverse benefit determination. The plan or issuer must not consider a request for such diagnosis and treatment information, in itself, to be a request for an internal appeal under this paragraph (b) or an external review under paragraphs (c) and (d) of this section.

* * * * *

(F) *Deemed exhaustion of internal claims and appeals processes*—(*1*) In the case of a plan or issuer that fails to adhere to all the requirements of this paragraph (b)(2) with respect to a claim, the claimant is deemed to have exhausted the internal claims and appeals process of this paragraph (b), except as provided in paragraph (b)(2)(ii)(F)(*2*) of this section. Accordingly, the claimant may initiate an external review under paragraph (c) or (d) of this section, as applicable. The claimant is also entitled to pursue any available remedies under section 502(a) of ERISA or under State law, as applicable, on the basis that the plan or issuer has failed to provide a reasonable internal claims and appeals process that would yield a decision on the merits of the claim. If a claimant chooses to pursue remedies under section 502(a) of ERISA under such circumstances, the claim or appeal is deemed denied on review without the exercise of discretion by an appropriate fiduciary.

(*2*) Notwithstanding paragraph (b)(2)(ii)(F)(*1*) of this section, the internal claims and appeals process of this paragraph (b) will not be deemed exhausted based on *de minimis* violations that do not cause, and are not likely to cause, prejudice or harm to the claimant so long as the plan or issuer demonstrates that the violation was for good cause or due to matters beyond the control of the plan or issuer and that the violation occurred in the context of an ongoing, good faith exchange of information between the plan and the claimant. This exception is not available if the violation is part of a pattern or practice of violations by the plan or issuer. The claimant may request a written explanation of the violation from the plan or issuer, and the plan or issuer must provide such explanation within 10 days, including a specific description of its bases, if any, for asserting that the violation should not cause the internal claims and appeals process of this paragraph (b) to be deemed exhausted. If an external reviewer or a court rejects the claimant's request for immediate review under paragraph (b)(2)(ii)(F)(*1*) of this section on the basis that the plan met the standards for the exception under this paragraph (b)(2)(ii)(F)(*2*), the claimant has the right to resubmit and pursue the internal appeal of the claim. In such a case, within a reasonable time after the external reviewer or court rejects the claim for immediate review (not to exceed 10 days), the plan shall provide the claimant with notice of the opportunity to resubmit and pursue the internal appeal of the claim. Time periods for re-filing the claim shall begin to run upon claimant's receipt of such notice.

* * * * *

(c) * * *

(2) * * *

(xi) The State process must provide that the decision is binding on the plan or issuer, as well as the claimant, except to the extent other remedies are available under State or Federal law, and except that the requirement that the decision be binding shall not preclude the plan or issuer from making payment on the claim or otherwise providing benefits at any time, including after a final external review decision that denies the claim or otherwise fails to require such payment or benefits. For this purpose, the plan or issuer must provide benefits (including by making payment on the claim) pursuant to the final external review decision without delay, regardless of whether the plan or issuer intends to seek judicial review of the external review decision and unless or until there is a judicial decision otherwise.

* * * * *

(3) *Transition period for external review processes.* (i) Through December 31, 2011, an applicable State external review process applicable to a health insurance issuer or group health plan is considered to meet the requirements of PHS Act section 2719(b). Accordingly, through December 31, 2011, an applicable State external review process will be considered binding on the issuer or plan (in lieu of the requirements of the Federal external review process). If there is no applicable State external review process, the issuer or plan is required to comply with the requirements of the Federal external review process in paragraph (d) of this section.

(ii) For final internal adverse benefit determinations (or, in the case of simultaneous internal appeal and external review, adverse benefit determinations) provided on or after January 1, 2012, the Federal external review process will apply unless the Department of Health and Human Services determines that a State law meets all the minimum standards of paragraph (c)(2) of this section.

(d) * * *

(1) *Scope*—(i) *In general.* Subject to the suspension provision in paragraph (d)(1)(ii) of this section and except to the extent provided otherwise by the Secretary in guidance, the Federal external review process established pursuant to this paragraph (d) applies to any adverse benefit determination or final internal adverse benefit determination (as defined in paragraphs (a)(2)(i) and (a)(2)(v) of this section), except that a denial, reduction, termination, or a failure to provide payment for a benefit based on a determination that a participant or beneficiary fails to meet the requirements for eligibility under the terms of a group health plan is not eligible for the Federal external review process under this paragraph (d).

(ii) *Suspension of general rule.* Unless or until this suspension is revoked in guidance by the Secretary, with respect to claims for which external review has not been initiated before the effective date of this paragraph (d)(1) (September 20, 2011), the Federal external review process established pursuant to this paragraph (d) applies only to:

(A) An adverse benefit determination (including a final internal adverse benefit determination) by a plan or issuer that involves medical judgment (including, but not limited to, those based on the plan's or issuer's requirements for medical necessity, appropriateness, health care setting, level of care, or effectiveness of a covered benefit; or its determination that a treatment is experimental or investigational), as determined by the external reviewer; and

(B) A rescission of coverage (whether or not the rescission has any effect on any particular benefit at that time).

(iii) *Examples.* This rules of paragraph (d)(1)(ii) of this section are illustrated by the following examples:

Example 1. (i) *Facts.* A group health plan provides coverage for 30 physical therapy visits generally. After the 30th visit, coverage is provided only if the service is preauthorized pursuant to an approved treatment plan that takes into account medical necessity using the plan's definition of the term. Individual *A* seeks coverage for a 31st physical therapy visit. *A's* health care provider submits a treatment plan for approval, but it is not approved by the plan, so coverage for the 31st visit is not preauthorized. With respect to the 31st visit, *A* receives a notice of final internal adverse benefit determination stating that the maximum visit limit is exceeded.

(ii) *Conclusion.* In this *Example 1,* the plan's denial of benefits is based on medical necessity and involves medical judgment. Accordingly, the claim is eligible for external review during the suspension period under paragraph (d)(1)(ii) of this section. Moreover, the plan's notification of final internal adverse benefit determination is inadequate under paragraphs (b)(2)(i) and (b)(2)(ii)(E)(*3*) of this section because it fails to make clear that the plan will pay for more than 30 visits if the service is preauthorized pursuant to an approved treatment plan that takes into account medical necessity using the plan's definition of the term. Accordingly, the notice of final internal adverse benefit determination should refer to the plan provision governing the 31st visit and should describe the plan's standard for medical necessity, as well as how the treatment fails to meet the plan's standard.

Example 2. (i) *Facts.* A group health plan does not provide coverage for services provided out of network, unless the service cannot effectively be provided in network. Individual *B* seeks coverage for a specialized medical procedure from an out-of-network provider because *B* believes that the procedure cannot be effectively provided in network. *B* receives a notice of final internal adverse benefit determination stating that the claim is denied because the provider is out-of-network.

(ii) *Conclusion.* In this *Example 2,* the plan's denial of benefits is based on whether a service can effectively be provided in network and, therefore, involves medical judgment. Accordingly, the claim is eligible for external review during the suspension period under paragraph (d)(1)(ii) of this section. Moreover, the plan's notice of final internal adverse benefit determination is inadequate under paragraphs (b)(2)(i) and (b)(2)(ii)(E)(*3*) of this section because the plan does provide benefits for services on an out-of-network basis if the services cannot effectively be provided in network. Accordingly, the notice of final internal adverse benefit determination is required to refer to the exception to the out-of-network exclusion and should describe the plan's standards for determining effectiveness of services, as well as how services available to the claimant within the plan's network meet the plan's standard for effectiveness of services.

* * * * *

(2) * * *

(iv) These standards will provide that an external review decision is binding on the plan or issuer, as well as the claimant, except to the extent other remedies are available under State or Federal law, and except that the requirement that the decision be binding shall not preclude the plan or issuer from making payment on the claim or otherwise providing benefits at any time, including after a final external review decision that denies the claim or otherwise fails to require such payment or benefits. For this purpose, the plan or issuer must provide any benefits (including by making payment on the claim) pursuant to the final external review decision without delay, regardless of whether the plan or issuer intends to seek judicial review of the external review decision and unless or until there is a judicial decision otherwise.

* * * * *

(e) *Form and manner of notice*—(1) *In general.* For purposes of this section, a group health plan and a health insurance issuer offering group health insurance coverage are considered to provide relevant notices in a culturally and linguistically appropriate manner if the plan or issuer meets all the requirements of paragraph (e)(2) of this section with respect to the applicable non-English languages described in paragraph (e)(3) of this section.

(2) *Requirements*—(i) The plan or issuer must provide oral language services (such as a telephone customer assistance hotline) that include answering questions in any applicable non-English language and providing assistance with filing claims and appeals (including external review) in any applicable non-English language;

(ii) The plan or issuer must provide, upon request, a notice in any applicable non-English language; and

(iii) The plan or issuer must include in the English versions of all notices, a statement prominently displayed in any applicable non-English language clearly indicating how to access the language services provided by the plan or issuer.

(3) *Applicable non-English language.* With respect to an address in any United States county to which a notice is sent, a non-English language is an applicable non-English language if ten percent or more of the population residing in the county is literate only in the same non-English language, as determined in guidance published by the Secretary.

* * * * *

Department of Health and Human Services

45 CFR Subtitle A

For the reasons stated in the preamble, the Department of Health and Human Services amends 45 CFR part 147 as follows:

PART 147—HEALTH INSURANCE REFORM REQUIREMENTS FOR THE GROUP AND INDIVIDUAL HEALTH INSURANCE MARKETS

■ 1. The authority citation for part 147 continues to read as follows:

Authority: Sections 2701 through 2763, 2791, and 2792 of the Public Health Service Act (42 U.S.C. 300gg through 300gg–63, 300gg–91, and 300gg–92), as amended.

■ 2. Section 147.136 is amended by:

■ 1. Revising paragraphs (b)(2)(ii)(B), (b)(2)(ii)(E)(*1*), (b)(2)(ii)(F), (c)(2)(xi), (c)(3), (d)(1), (d)(2)(iv), and (e).

■ 2. Redesignating (b)(2)(ii)(E)(*2*), (b)(2)(ii)(E)(*3*), and (b)(2)(ii)(E)(*4*) as (b)(2)(ii)(E)(*3*), (b)(2)(ii)(E)(*4*), and (b)(2)(ii)(E)(*5*), respectively.

■ 3. Adding new paragraph (b)(2)(ii)(E)(*2*).

The revisions and addition read as follows:

§ 147.136 Internal claims and appeals and external review processes.

* * * * *

(b) * * *

(2) * * *

(ii) * * *

(B) *Expedited notification of benefit determinations involving urgent care.* The requirements of 29 CFR 2560.503–1(f)(2)(i) (which generally provide, among other things, in the case of urgent care claims for notification of the plan's benefit determination (whether adverse or not) as soon as possible, taking into account the medical exigencies, but not later than 72 hours after receipt of the claim) continue to apply to the plan and issuer. For purposes of this paragraph (b)(2)(ii)(B), a claim involving urgent care has the meaning given in 29 CFR 2560.503–1(m)(1), as determined by the attending provider, and the plan or issuer shall defer to such determination of the attending provider.

* * * * *

(E) * * *

(*1*) The plan and issuer must ensure that any notice of adverse benefit determination or final internal adverse benefit determination includes information sufficient to identify the claim involved (including the date of service, the health care provider, the claim amount (if applicable), and a statement describing the availability, upon request, of the diagnosis code and its corresponding meaning, and the treatment code and its corresponding meaning).

(*2*) The plan and issuer must provide to participants and beneficiaries, as soon as practicable, upon request, the diagnosis code and its corresponding meaning, and the treatment code and its corresponding meaning, associated with any adverse benefit determination or final internal adverse benefit determination. The plan or issuer must not consider a request for such diagnosis and treatment information, in itself, to be a request for an internal appeal under this paragraph (b) or an external review under paragraphs (c) and (d) of this section.

* * * * *

(F) *Deemed exhaustion of internal claims and appeals processes*—(*1*) In the case of a plan or issuer that fails to adhere to all the requirements of this paragraph (b)(2) with respect to a claim, the claimant is deemed to have exhausted the internal claims and appeals process of this paragraph (b), except as provided in paragraph (b)(2)(ii)(F)(*2*) of this section. Accordingly, the claimant may initiate an external review under paragraph (c) or (d) of this section, as applicable. The claimant is also entitled to pursue any available remedies under section 502(a) of ERISA or under State law, as applicable, on the basis that the plan or issuer has failed to provide a reasonable internal claims and appeals process that would yield a decision on the merits of the claim. If a claimant chooses to pursue remedies under section 502(a) of ERISA under such circumstances, the claim or appeal is deemed denied on review without the exercise of discretion by an appropriate fiduciary.

(*2*) Notwithstanding paragraph (b)(2)(ii)(F)(*1*) of this section, the internal claims and appeals process of this paragraph (b) will not be deemed exhausted based on *de minimis* violations that do not cause, and are not likely to cause, prejudice or harm to the claimant so long as the plan or issuer demonstrates that the violation was for good cause or due to matters beyond the control of the plan or issuer and that the violation occurred in the context of an ongoing, good faith exchange of information between the plan and the claimant. This exception is not available if the violation is part of a pattern or practice of violations by the plan or issuer. The claimant may request a written explanation of the violation from the plan or issuer, and the plan or issuer must provide such explanation within 10 days, including a specific description of its bases, if any, for asserting that the violation should not cause the internal claims and appeals process of this paragraph (b) to be deemed exhausted. If an external reviewer or a court rejects the claimant's request for immediate review under paragraph (b)(2)(ii)(F)(*1*) of this section on the basis that the plan met the standards for the exception under this paragraph (b)(2)(ii)(F)(*2*), the claimant has the right to resubmit and pursue the internal appeal of the claim. In such a case, within a reasonable time after the external reviewer or court rejects the claim for immediate review (not to exceed 10 days), the plan shall provide the claimant with notice of the opportunity to resubmit and pursue the internal appeal of the claim. Time periods for re-filing the claim shall begin to run upon claimant's receipt of such notice.

* * * * *

(c) * * *

(2) * * *

(xi) The State process must provide that the decision is binding on the plan or issuer, as well as the claimant, except to the extent other remedies are available under State or Federal law, and except that the requirement that the decision be binding shall not preclude the plan or issuer from making payment on the claim or otherwise providing benefits at any time, including after a final external review decision that denies the claim or otherwise fails to require such payment or benefits. For this purpose, the plan or issuer must provide benefits (including by making payment on the claim) pursuant to the final external review decision without delay, regardless of whether the plan or issuer intends to seek judicial review of the external review decision and unless or until there is a judicial decision otherwise.

* * * * *

(3) *Transition period for external review processes.* (i) Through December 31, 2011, an applicable State external review process applicable to a health insurance issuer or group health plan is considered to meet the requirements of PHS Act section 2719(b). Accordingly, through December 31, 2011, an applicable State external review process will be considered binding on the issuer or plan (in lieu of the requirements of the Federal external review process). If there is no applicable State external review process, the issuer or plan is required to comply with the requirements of the Federal external review process in paragraph (d) of this section.

(ii) For final internal adverse benefit determinations (or, in the case of simultaneous internal appeal and external review, adverse benefit determinations) provided on or after January 1, 2012, the Federal external review process will apply unless the Department of Health and Human Services determines that a State law meets all the minimum standards of paragraph (c)(2) of this section.

(d) * * *

(1) *Scope*—(i) *In general.* Subject to the suspension provision in paragraph (d)(1)(ii) of this section and except to the extent provided otherwise by the Secretary in guidance, the Federal external review process established pursuant to this paragraph (d) applies to any adverse benefit determination or final internal adverse benefit determination (as defined in paragraphs (a)(2)(i) and (a)(2)(v) of this section), except that a denial, reduction, termination, or a failure to provide payment for a benefit based on a determination that a participant or beneficiary fails to meet the requirements for eligibility under the terms of a group health plan is not eligible for the Federal external review process under this paragraph (d).

(ii) *Suspension of general rule.* Unless or until this suspension is revoked in guidance by the Secretary, with respect to claims for which external review has not been initiated before September 20, 2011, the Federal external review process established pursuant to this paragraph (d) applies only to:

(A) An adverse benefit determination (including a final internal adverse benefit determination) by a plan or issuer that involves medical judgment (including, but not limited to, those based on the plan's or issuer's requirements for medical necessity, appropriateness, health care setting, level of care, or effectiveness of a covered benefit; or its determination that a treatment is experimental or investigational), as determined by the external reviewer; and

(B) A rescission of coverage (whether or not the rescission has any effect on any particular benefit at that time).

(iii) *Examples.* This rules of paragraph (d)(1)(ii) of this section are illustrated by the following examples:

Example 1. (i) *Facts.* A group health plan provides coverage for 30 physical therapy visits generally. After the 30th visit, coverage is provided only if the service is preauthorized pursuant to an approved treatment plan that takes into account medical necessity using the plan's definition of the term. Individual *A* seeks coverage for a 31st physical therapy visit. *A*'s health care provider submits a treatment plan for approval, but it is not approved by the plan, so coverage for the 31st visit is not preauthorized. With respect to the 31st visit, *A* receives a notice of final internal adverse benefit determination stating that the maximum visit limit is exceeded.

(ii) *Conclusion.* In this *Example 1,* the plan's denial of benefits is based on medical necessity and involves medical judgment. Accordingly, the claim is eligible for external review during the suspension period under paragraph (d)(1)(ii) of this section. Moreover, the plan's notification of final internal adverse benefit determination is inadequate under paragraphs (b)(2)(i) and (b)(2)(ii)(E)(*3*) of this section because it fails to make clear that the plan will pay for more than 30 visits if the service is preauthorized pursuant to an approved treatment plan that takes into account medical necessity using the plan's definition of the term. Accordingly, the notice of final internal adverse benefit determination should refer to the plan provision governing the 31st visit and should

describe the plan's standard for medical necessity, as well as how the treatment fails to meet the plan's standard.

Example 2. (i) *Facts.* A group health plan does not provide coverage for services provided out of network, unless the service cannot effectively be provided in network. Individual *B* seeks coverage for a specialized medical procedure from an out-of-network provider because *B* believes that the procedure cannot be effectively provided in network. *B* receives a notice of final internal adverse benefit determination stating that the claim is denied because the provider is out-of-network.

(ii) *Conclusion.* In this *Example 2,* the plan's denial of benefits is based on whether a service can effectively be provided in network and, therefore, involves medical judgment. Accordingly, the claim is eligible for external review during the suspension period under paragraph (d)(1)(ii) of this section. Moreover, the plan's notice of final internal adverse benefit determination is inadequate under paragraphs (b)(2)(i) and (b)(2)(ii)(E)(*3*) of this section because the plan does provide benefits for services on an out-of-network basis if the services cannot effectively be provided in network. Accordingly, the notice of final internal adverse benefit determination is required to refer to the exception to the out-of-network exclusion and should describe the plan's standards for determining effectiveness of services, as well as how services available to the claimant within the plan's network meet the plan's standard for effectiveness of services.

* * * * *

(2) * * *

(iv) These standards will provide that an external review decision is binding on the plan or issuer, as well as the claimant, except to the extent other remedies are available under State or Federal law, and except that the requirement that the decision be binding shall not preclude the plan or issuer from making payment on the claim or otherwise providing benefits at any time, including after a final external review decision that denies the claim or otherwise fails to require such payment or benefits. For this purpose, the plan or issuer must provide any benefits (including by making payment on the claim) pursuant to the final external review decision without delay, regardless of whether the plan or issuer intends to seek judicial review of the external review decision and unless or until there is a judicial decision otherwise.

* * * * *

(e) *Form and manner of notice*—(1) *In general.* For purposes of this section, a group health plan and a health insurance issuer offering group or individual health insurance coverage are considered to provide relevant notices in a culturally and linguistically appropriate manner if the plan or issuer meets all the requirements of paragraph (e)(2) of this section with respect to the applicable non-English languages described in paragraph (e)(3) of this section.

(2) *Requirements*—(i) The plan or issuer must provide oral language services (such as a telephone customer assistance hotline) that include answering questions in any applicable non-English language and providing assistance with filing claims and appeals (including external review) in any applicable non-English language;

(ii) The plan or issuer must provide, upon request, a notice in any applicable non-English language; and

(iii) The plan or issuer must include in the English versions of all notices, a statement prominently displayed in any applicable non-English language clearly indicating how to access the language services provided by the plan or issuer.

(3) *Applicable non-English language.* With respect to an address in any United States county to which a notice is sent, a non-English language is an applicable non-English language if ten percent or more of the population residing in the county is literate only in the same non-English language, as determined in guidance published by the Secretary.

* * * * *

[FR Doc. 2011–15890 Filed 6–22–11; 4:15 pm]

BILLING CODE 4830–01–P

FEDERAL REGISTER

Vol. 76 Friday,

No. 122 June 24, 2011

Part IV

The President

Notice of June 23, 2011—Continuation of the National Emergency With Respect to North Korea

Notice of June 23, 2011—Continuation of the National Emergency With Respect to the Western Balkans

Federal Register
Vol. 76, No. 122
Friday, June 24, 2011

Presidential Documents

Title 3—

The President

Notice of June 23, 2011

Continuation of the National Emergency With Respect to North Korea

On June 26, 2008, by Executive Order 13466, the President declared a national emergency pursuant to the International Emergency Economic Powers Act (50 U.S.C. 1701–1706) to deal with the unusual and extraordinary threat to the national security and foreign policy of the United States constituted by the existence and risk of the proliferation of weapons-usable fissile material on the Korean Peninsula. The President also found that it was necessary to maintain certain restrictions with respect to North Korea that would otherwise have been lifted pursuant to Proclamation 8271 of June 26, 2008, which terminated the exercise of authorities under the Trading With the Enemy Act (50 U.S.C. App. 1–44) with respect to North Korea.

On August 30, 2010, I signed Executive Order 13551, which expanded the scope of the national emergency declared in Executive Order 13466 to deal with the unusual and extraordinary threat to the national security, foreign policy, and economy of the United States posed by the continued actions and policies of the Government of North Korea.

On April 18, 2011, I signed Executive Order 13570 to take additional steps to address the national emergency declared in Executive Order 13466, and expanded in Executive Order 13551, to ensure the implementation of the import restrictions contained in United Nations Security Council Resolutions 1718 and 1874 and complement the import restrictions provided for in the Arms Export Control Act.

Because the existence and the risk of proliferation of weapons-usable fissile material on the Korean Peninsula and the actions and policies of the Government of North Korea continue to pose an unusual and extraordinary threat to the national security, foreign policy, and economy of the United States, the national emergency declared in Executive Order 13466, expanded in scope in Executive Order 13551, and addressed further in Executive Order 13570, and the measures taken to deal with that national emergency, must continue in effect beyond June 26, 2011. Therefore, in accordance with section 202(d) of the National Emergencies Act (50 U.S.C. 1622(d)), I am continuing for 1 year the national emergency declared in Executive Order 13466.

This notice shall be published in the *Federal Register* and transmitted to the Congress.

THE WHITE HOUSE,
June 23, 2011.

[FR Doc. 2011–16100
Filed 6–23–11; 11:15 am]
Billing code 3195–W1–P

Presidential Documents

Notice of June 23, 2011

Continuation of the National Emergency With Respect To the Western Balkans

On June 26, 2001, by Executive Order 13219, the President declared a national emergency with respect to the Western Balkans, pursuant to the International Emergency Economic Powers Act (50 U.S.C. 1701–1706), to deal with the unusual and extraordinary threat to the national security and foreign policy of the United States constituted by the actions of persons engaged in, or assisting, sponsoring, or supporting (i) extremist violence in the Republic of Macedonia and elsewhere in the Western Balkans region, or (ii) acts obstructing implementation of the Dayton Accords in Bosnia or United Nations Security Council Resolution 1244 of June 10, 1999, in Kosovo. The President subsequently amended that order in Executive Order 13304 of May 28, 2003.

Because the actions of persons threatening the peace and international stabilization efforts in the Western Balkans continue to pose an unusual and extraordinary threat to the national security and foreign policy of the United States, the national emergency declared on June 26, 2001, and the measures adopted on that date and thereafter to deal with that emergency, must continue in effect beyond June 26, 2011. Therefore, in accordance with section 202(d) of the National Emergencies Act (50 U.S.C. 1622(d)), I am continuing for 1 year the national emergency with respect to the Western Balkans.

This notice shall be published in the *Federal Register* and transmitted to the Congress.

THE WHITE HOUSE,
June 23, 2011.

[FR Doc. 2011–16103
Filed 6–23–11; 11:15 am]
Billing code 3195–W1–P

Reader Aids

Federal Register

Vol. 76, No. 122

Friday, June 24, 2011

CUSTOMER SERVICE AND INFORMATION

Federal Register/Code of Federal Regulations	
General Information, indexes and other finding aids	**202–741–6000**
Laws	**741–6000**
Presidential Documents	
Executive orders and proclamations	**741–6000**
The United States Government Manual	**741–6000**
Other Services	
Electronic and on-line services (voice)	**741–6020**
Privacy Act Compilation	**741–6064**
Public Laws Update Service (numbers, dates, etc.)	**741–6043**
TTY for the deaf-and-hard-of-hearing	**741–6086**

ELECTRONIC RESEARCH

World Wide Web

Full text of the daily Federal Register, CFR and other publications is located at: **www.fdsys.gov.**

Federal Register information and research tools, including Public Inspection List, indexes, and links to GPO Access are located at: **www.ofr.gov.**

E-mail

FEDREGTOC-L (Federal Register Table of Contents LISTSERV) is an open e-mail service that provides subscribers with a digital form of the Federal Register Table of Contents. The digital form of the Federal Register Table of Contents includes HTML and PDF links to the full text of each document.

To join or leave, go to **http://listserv.access.gpo.gov** and select *Online mailing list archives, FEDREGTOC-L, Join or leave the list (or change settings);* then follow the instructions.

PENS (Public Law Electronic Notification Service) is an e-mail service that notifies subscribers of recently enacted laws.

To subscribe, go to **http://listserv.gsa.gov/archives/publaws-l.html** and select *Join or leave the list (or change settings);* then follow the instructions.

FEDREGTOC-L and **PENS** are mailing lists only. We cannot respond to specific inquiries.

Reference questions. Send questions and comments about the Federal Register system to: **fedreg.info@nara.gov**

The Federal Register staff cannot interpret specific documents or regulations.

Reminders. Effective January 1, 2009, the Reminders, including Rules Going Into Effect and Comments Due Next Week, no longer appear in the Reader Aids section of the Federal Register. This information can be found online at **http://www.regulations.gov.**

CFR Checklist. Effective January 1, 2009, the CFR Checklist no longer appears in the Federal Register. This information can be found online at **http://bookstore.gpo.gov/.**

FEDERAL REGISTER PAGES AND DATE, JUNE

31451–31784 1
31785–32064 2
32065–32312 3
32313–32850 6
32851–33120 7
33121–33612 8
33613–33966 9
33967–34142 10
34143–34572 13
34573–34844 14
34845–35094 15
35095–35300 16
35301–35712 17
35713–35956 20
35957–36280 21
36281–36856 22
36857–36960 23
36961–37240 24

CFR PARTS AFFECTED DURING JUNE

At the end of each month the Office of the Federal Register publishes separately a List of CFR Sections Affected (LSA), which lists parts and sections affected by documents published since the revision date of each title.

2 CFR

780 34143
782 34573

Proposed Rules:

Ch. XI 32330
Ch. XVIII 31884
Ch. XXIV 31884
Ch. XXVII 34003

3 CFR

Proclamations:

8683 32065
8684 32851
8685 32853
8686 32855
8687 32857
8688 33119
8689 35089
8690 36855

Executive Orders:

13575 34841
13576 35297
13577 35715

Administrative Orders:

Memorandums:
Memorandum of May 31, 2011 33117
Memorandum of June 6, 2011 33613
Notice of June 14, 2011 35093
Notice of June 17, 2011 35955
Notice of June 23, 2011 37237
Notice of June 23, 2011 37239
Presidential Determinations:
No. 2011-10 of June 3, 2011 35713
No. 2011-11 of June 8, 2011 35719

5 CFR

531 32859
532 31785
890 36857
Ch. LXX 35957

Proposed Rules:

Ch. I 31886
532 31885
Ch. VII 32088
Ch. XXVI 32330
Ch. XXVIII 34003
Ch. XXXV 31886
Ch. XLII 34177
Ch. XLV 32330
Ch. LIX 31884
Ch. LXV 31884

6 CFR

Proposed Rules:

Ch. I 32331
5 ..... 34177, 34616

7 CFR

51 31787
201 31790
210 ..... 34542, 35301
215 34542
220 34542
225 34542
226 34542
246 35095
457 32067
932 35957
953 33967
985 33969
1206 36281
1728 36961
1755 36961
3430 ..... 35318, 35319

Proposed Rules:

36 31887
205 ..... 31495, 34180
271 35787
273 35787
281 35787
916 31888
917 31888
958 35997
983 34181
987 34618
1170 34004
1205 32088
3434 34187

8 CFR

214 33970

Proposed Rules:

Ch. I 32331
Ch. V 34003

9 CFR

307 33974
381 33974
590 33974

Proposed Rules:

92 31499
93 31499
94 31499
96 31499
98 31499

10 CFR

20 35512
30 35512
40 35512
50 ..... 35512, 36232
70 35512
72 ..... 33121, 35512
170 36780

171 36780
217 33615
430 31750
431 ....31795, 33631
Proposed Rules:
30 36386
35 33173
40 31507
50 ....32878, 34007
72 35137
73 35137
150 31507
430 34914
431 34192

11 CFR

Proposed Rules:
109 36000
114 36001

12 CFR

202 31451
213 35721
225 35959
226 ....35722, 35723
309 35963
310 35963
651 35966
652 35966
701 36976
750 36979
914 33121
1229 35724
1235 33121
1237 35724
1732 33121
Proposed Rules:
4 ....32332, 37029
5 ....32332, 37029
7 ....32332, 37029
8 ....32332, 37029
28 ....32332, 37029
34 ....32332, 37029
43 34010
45 37029
202 36885
225 35351
237 37029
244 34010
324 37029
373 34010
624 37029
652 35138
703 37030
Ch. XVII 31884
1221 37029
1234 34010
1236 35791

13 CFR

124 33980
Proposed Rules:
Chapter 1 36887

14 CFR

1 34576
23 33129
25 ....31451, 31453, 31454, 31456, 33129, 35324, 35736, 36851, 36863, 36864, 36865, 36870
27 33129
29 33129
33 33981
39 ....31457, 31459, 31462, 31465, 31796, 31798, 31800, 31803, 33982, 33984, 33986, 33988, 33991, 35327, 35330, 35334, 35336, 35340, 35342, 35344 35346, 36283, 36980, 36981
71 ....31821, 31822, 34576, 35097, 35966, 35967, 36285, 36286
73 36871
77 36983
91 31823
93 34576
95 33136
97 ....35098, 35101
121 35103
135 35103
417 33139
Proposed Rules:
21 36001
36 36001
39 ....31508, 32103, 33173, 33176, 33658, 33660, 34011, 34014, 34625, 34918, 36011, 36387, 36390, 36392, 36395, 36398
65 36888
71 ....31510, 32879, 34196, 34627, 35362, 35363, 35369, 35370, 35371, 35799, 36014, 36017, 37034
91 36890
119 36888
121 36888
135 36888
139 32105
142 36888
217 31511
241 31511
298 31511
382 32107
Ch. V 31884

15 CFR

732 35276
734 36986
738 35276
740 ....34577, 35276, 36986
743 ....34577, 35276, 36986
774 ....34577, 35276, 36986

16 CFR

259 31467
Proposed Rules:
309 31513
1460 33179

17 CFR

200 35348
240 ....34300, 34579, 36287
249 34300
Proposed Rules:
1 ....32880, 33066, 35372
5 33066
7 33066
8 33066
15 33066
18 33066
21 33066
22 ....31518, 33818, 35141
36 33066
41 33066
140 33066
145 33066
155 33066
166 33066
190 ....31518, 33818, 35141
230 ....31518, 34920
232 33420
239 31518
240 ....32880, 33420, 34920
246 34010
249 33420
249b 33420
260 34920

18 CFR

Proposed Rules:
Ch. I 36400

19 CFR

122 31823
Proposed Rules:
Ch. I 32331

20 CFR

Proposed Rules:
Ch. III 31892
Ch. IV 34177
Ch. V 34177
Ch. VI 34177
Ch. VII 34177
Ch. IX 34177

21 CFR

5 31468
10 31468
14 31468
19 31468
20 31468
21 31468
50 36989
201 ....35620, 35665
310 ....35620, 35665
312 32863
314 31468
320 32863
333 36307
350 31468
516 31468
814 31468
874 34845
882 36993
1141 36628
1310 31824
Proposed Rules:
Ch. I 32330
Ch. II 34003
201 ....35672, 35678
310 35678
352 35669
573 32332
600 36019
610 36019
680 36019

22 CFR

62 33993
208 34143
210 34573

23 CFR

Proposed Rules:
627 36410

24 CFR

30 36850
Proposed Rules:
Ch. I 31884
Ch. II 31884
267 34010
Ch. III 31884
Ch. IV 31884
Ch. V 31884
Ch. VI 31884
Ch. VIII 31884
Ch. IX 31884
Ch. X 31884
Ch. XII 31884

25 CFR

Proposed Rules:
Ch. I 33180
Ch. III 33181
Ch. V 32330

26 CFR

1 ....33994, 33997, 36993, 36995, 36996
31 32864
54 ....36996, 37208
Proposed Rules:
1 ....31543, 32880, 32882, 34017, 34019, 37034
31 32885
54 37037
301 31543
405 36178
406 36178

27 CFR

Proposed Rules:
Ch. II 34003

28 CFR

Proposed Rules:
Ch. I 34003
104 36027
III 34003
V 34003
VI 34003

29 CFR

1910 33590
1915 33590
1917 33590
1918 33590
1919 33590
1926 33590
1928 33590
2590 37208
4001 34590
4022 ....34590, 34847
4044 ....34590, 34847
Proposed Rules:
Ch. II 34177
Ch. IV 34177
Ch. V 34177
Ch. VII 34177
101 36812
102 36812
103 36812
1602 31892
1904 36414
Ch. XXV 34177
2550 31544

30 CFR

75 35968
950 34816
Proposed Rules:
Ch. I 34177
75 35801
104 35801
906 36039
950 36040

31 CFR

10 32286

500 35739
505 35739
510 35740
545 31470
1010 37000
Proposed Rules:
Ch. IX 34003

32 CFR

706 32865
Proposed Rules:
Ch. I 32330
Ch. V 32330
Ch. VI 32330
Ch. VII 32330
Ch. XII 32330

33 CFR

1 31831
27 31831
96 31831
100 ....32313, 34606, 36308, 36311, 37000
101 31831
107 31831
110 35742
115 31831
117 ....31831, 31838, 34848, 35349, 35978, 37001, 37002
135 31831
140 31831
148 31831
150 31831
151 31831
160 31831
161 31831
162 31831
164 31831
165 ....31839, 31843, 31846, 31848, 31851, 31853, 32069, 32071, 32313, 33151, 33154, 33155, 33157, 33639, 33641, 33643, 33646, 34145, 34852, 34854, 34855, 34859, 34862, 34867, 34869, 35104, 35106, 35742, 36314, 36316, 36318, 37002, 37005, 37007, 37009, 37012
166 31831
167 31831
169 31831
175 33160
183 33160
Proposed Rules:
Ch. I 32331
100 ....35802, 36438
110 34197
117 ....37039, 37041
165 ....31895, 36438, 36447
167 35805
175 35378
183 35378
Ch. II 32330
334 35379

34 CFR

Ch. II 32073
222 31855
668 34386

36 CFR

Proposed Rules:
Ch. III 32330

37 CFR

201 32316

38 CFR

17 37202
18 33999
21 33999
Proposed Rules:
17 35162

39 CFR

111 34871
952 36320

40 CFR

52 ....31856, 31858, 32321, 33647, 33650, 33651, 34000, 34608, 34872, 36326, 36329, 36873, 36875
63 35744
98 36339
141 37014
180 ....31471, 31479, 31485, 34877, 34883, 36342, 36349, 36356
262 36363
268 34147
271 ....34147, 36879, 37021
300 32081
Proposed Rules:
Ch. I 35383
51 36450
52 ....31898, 31900, 32110, 32113, 32333, 33181, 33662, 34020, 34021, 34630, 34935, 35167, 35380, 36468, 36471, 37044
63 35806
81 36042
86 32886
98 36472
171 37045
174 ....33183, 36479
180 ....33184, 34937, 36479
262 36480
268 34200
271 ....34200, 37048
300 32115
Ch. IV 34003
Ch. VII 32330

41 CFR

302-16 35110
Proposed Rules:
Ch. 50 34177
Ch. 60 34177
Ch. 61 34177
Ch. 101 32088
Ch. 102 32088
102-34 31545
Ch. 105 32088
Ch. 128 34003
60-250 36482
60-300 36482
301-11 32340
302-2 32340
302-3 32340
302-17 32340

42 CFR

100 36367
412 32085
434 32816
438 32816
447 32816
Proposed Rules:
Ch. I 32330
5 31546
81 36891
84 33188
401 33566
412 34633
413 34633
414 ....31547, 32410
476 34633
485 35684
Ch. V 32330

44 CFR

64 ....34611, 36369
65 35753
67 ....35111, 35119, 36373
Proposed Rules:
Ch. I 32331
67 ....32896, 36044, 36482

45 CFR

147 37208
Proposed Rules:
Ch. II 32330
Ch. III 32330
Ch. IV 32330
Ch. V 34003
Ch. VIII 31886
Ch. X 32330
Ch. XIII 32330

46 CFR

45 32323
Proposed Rules:
Ch. I 32331
Ch. III 32331
10 35169
12 35173
515 34945

47 CFR

1 32866
2 33653
73 ....33656, 36384
80 33653
90 33653
Proposed Rules:
1 37049
2 37049
4 ....33686, 36892
11 35810
15 35176
22 37049
24 37049
27 ....32901, 37049
73 ....32116, 35831, 37049
74 35181
76 32116
78 35181
90 37049
95 37049
101 35181

48 CFR

203 32840
211 33166
212 33170
225 ....32841, 32843, 36883
242 36883
246 33166
252 ....32840, 32841, 33166, 36883
539 34886
552 34886
1602 36857
1615 36857
1632 36857
1652 36857
Proposed Rules:
Ch. 1 ....32133, 32330
2 32330
8 34634
9 34634
17 31886
21 31886
52 ....32330, 34634
54 32330
203 32846
204 32846
252 ....32845, 32846
Ch. 5 32088
Ch. 16 31886
Ch. 18 31884
Ch. 24 31884
Ch. 28 34003
Ch. 29 34177
Ch. 61 32088

49 CFR

171 32867
177 32867
192 35130
195 35130
213 34890
383 32327
390 32327
572 31860
595 37025
Proposed Rules:
390 32906
391 34635
396 32906
541 36486
Ch. XII 32331

50 CFR

17 ....31866, 33036, 35349, 35979
217 ....34157, 35995
223 35755
300 34890
600 34892
622 ....31874, 34892
635 32086
648 ....31491, 32873, 34903
660 ....32876, 34910
679 ....31881, 33171
680 ....35772, 35781
Proposed Rules:
17 ....31686, 31903, 31906, 31920, 32911, 33880, 33924, 36049, 36053, 36068, 36491, 36493
20 36508
223 ....31556, 34023, 37050
224 31556
226 32026
635 ....36071, 36892
648 ....34947, 35578, 36511
660 33189
665 32929

LIST OF PUBLIC LAWS

This is a continuing list of public bills from the current session of Congress which have become Federal laws. It may be used in conjunction with "P L U S" (Public Laws Update Service) on 202–741–6043. This list is also available online at *http://www.archives.gov/federal-register/laws*.

The text of laws is not published in the **Federal Register** but may be ordered in "slip law" (individual pamphlet) form from the Superintendent of Documents, U.S. Government Printing Office, Washington, DC 20402 (phone, 202–512–1808). The text will also be made available on the Internet from GPO's Federal Digital System (FDsys) at *http://www.gpo.gov/fdsys*. Some laws may not yet be available.

H.R. 754/P.L. 112–18

Intelligence Authorization Act for Fiscal Year 2011 (June 8, 2011; 125 Stat. 223)

Last List June 6, 2011

Public Laws Electronic Notification Service (PENS)

PENS is a free electronic mail notification service of newly enacted public laws. To subscribe, go to *http://listserv.gsa.gov/archives/publaws-l.html*

Note: This service is strictly for E-mail notification of new laws. The text of laws is not available through this service. **PENS** cannot respond to specific inquiries sent to this address.